1. Basic Diagnostic Procedure

A: BASIC PROCEDURES

1. GENERAL DESCRIPTION

The most important purpose of diagnostics is to quickly determine which part is malfunctioning, to save time and labor.

2. IDENTIFICATION OF TROUBLE SYMPTOM

Determine what the problem is based on the symptom.

3. PROBABLE CAUSE OF TROUBLE

Look at the wiring diagram and check the system's circuit. Then check the switch, relay, fuse, ground, etc.

4. LOCATION AND REPAIR OF TROUBLE

1) Using the diagnostics, narrow down the causes.
2) If necessary, use a voltmeter, ohmmeter, etc.
3) Before replacing certain component parts (switch, relay, etc.), check the power supply, ground, for open wiring harness, poor connectors, etc. If no problem is encountered, check the component parts.

5. SYSTEM OPERATION CHECK

After repairing, ensure that the system operates properly.

B: BASIC INSPECTION

1. VOLTAGE MEASUREMENT

1) Using a voltmeter, connect the negative lead to a good ground point or negative battery terminal and the positive lead to the connector or component terminal.
2) Contact the positive lead of the voltmeter on connector (A). The voltmeter will indicate a voltage.
3) Touch connector (B) with the positive probe. The voltmeter will indicate no voltage.

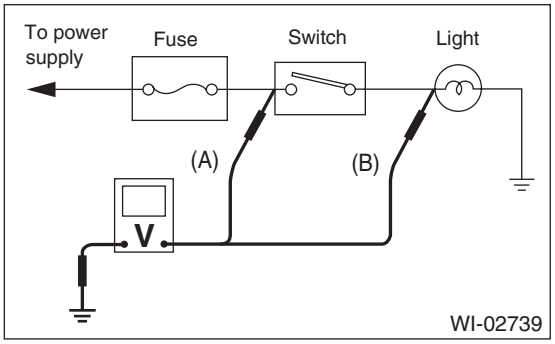

4) With the test set-up held as it is, turn the switch to ON. The voltmeter will indicate a voltage and, at the same time, the light will illuminate.
5) The circuit is in good order. If a problem such as a light failing to illuminate occurs, use the procedures outlined above to track down the malfunction.

2. CIRCUIT CONTINUITY CHECKS

1) Disconnect the battery terminal or connector so there is no voltage between the check points.
Contact the two leads of an ohmmeter to each of the check points.
If the circuit has diodes, reverse the two leads and check again.
2) Use an ohmmeter to check for diode continuity.
When contacting the negative lead to the diode positive side and the positive lead to the negative side, there should be continuity.
When contacting the two leads in reverse, there should be no continuity.

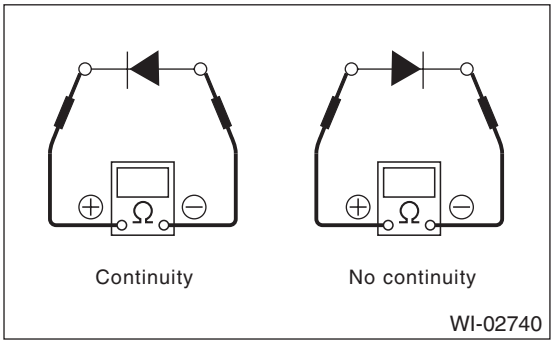

3) The symbol "❍ — ❍" indicates that continuity exists between two points or terminals. For example, when a switch position is at "3", continuity exists among terminals 1, 3 and 6, as shown in the table below.

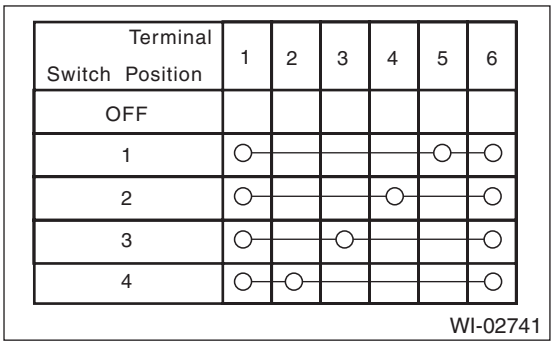

Terminal / Switch Position	1	2	3	4	5	6
OFF						
1	○				○	○
2	○			○		○
3	○		○			○
4	○	○				○

WI-02741

3. HOW TO DETERMINE AN OPEN CIRCUIT

1) With voltmeter:
An open circuit is determined by measuring the voltage between respective connectors and ground using a voltmeter, starting with the connector closest to the power supply. The power supply must be turned ON so that current flows in the circuit. If voltage is not present between a particular connector and ground, the circuit between that connector and the previous connector is open.

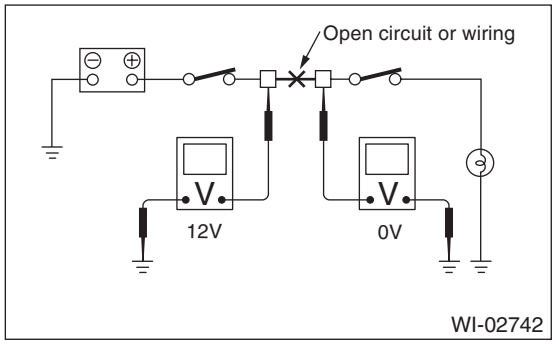

2) With ohmmeter:
Disconnect all connectors affected, and check continuity in the wiring between adjacent connectors. When the ohmmeter indicates “infinite”, the wiring is open.

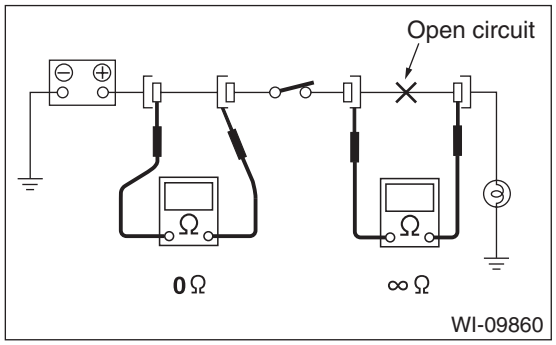

4. HOW TO DETERMINE A SHORT CIRCUIT

1) With test light:
Connect a test light (rated at approx. 3 watts) in place of the blown fuse and allow current to flow through the circuit. Disconnect one connector at a time from the circuit. Starting with the one located farthest from the power supply. If the test light goes out when a connector is disconnected, the wiring between that connector and the next connector (farther from the power supply) is shorted.

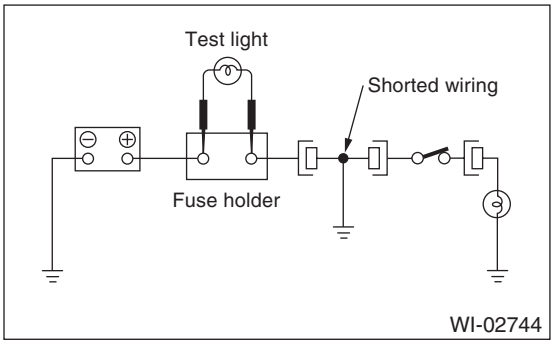

2) With ohmmeter:
Disconnect all affected connectors, and check continuity between each connector and ground. When the ohmmeter indicates continuity between a particular connector and a ground, that connector is shorted.

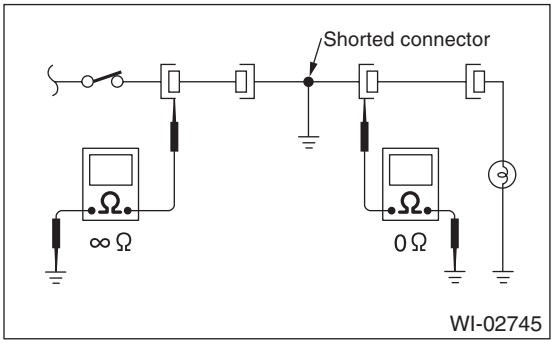

C: HOW TO READ WIRING DIAGRAMS

1. WIRING DIAGRAM

The wiring diagram of each system is illustrated so that you can understand the path through which the electric current flows from the battery.
Sketches and codes are used in the diagrams. They should read as follows:

- Each connector and its terminal position are indicated by a sketch of the connector in a disconnected state which is viewed from the front.

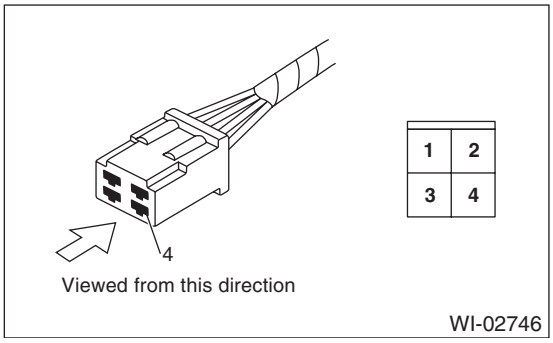

- The number of poles or pins, presence of a lock are indicated in the sketch of each connector. In the sketch, the highest pole number refers to the number of poles which the connector has. For example, the sketch of the connector shown in figure indicates the connector has 9 poles.

Connector used in vehicle	Connector shown in wiring diagram		
	Sketch	Symbol	Number of poles
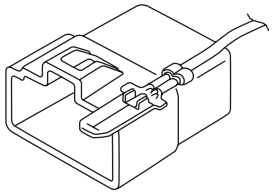	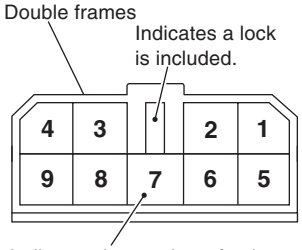	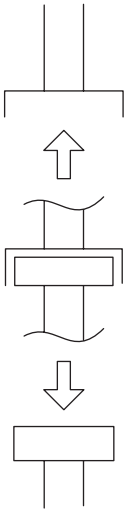	Numbered in order from upper right to lower left.
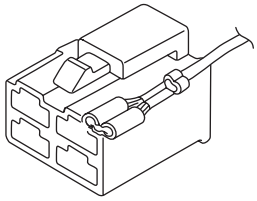	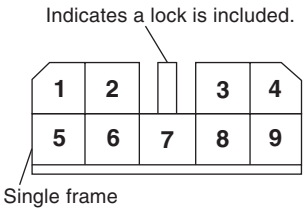		Numbered in order from upper left to lower right.

WI-02747

• When one set of connectors is viewed from the front side, the pole numbers of one connector are symmetrical to those of the other. When these two connectors are connected as a unit, the poles which have the same number are joined.

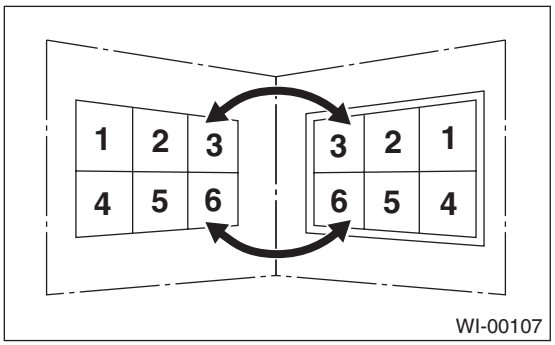

• WIRING DIAGRAM:
The connectors are numbered along with the number of poles, external colors, and mating connections in the accompanying list.
• The sketch of each connector in the wiring diagram usually shows the (A) side of the connector. The relationship between the wire color, terminal number and connector is described in the figure.

NOTE:
A wire which runs in one direction from a connector terminal sometimes may have a different color from that which runs in the other direction from that terminal.

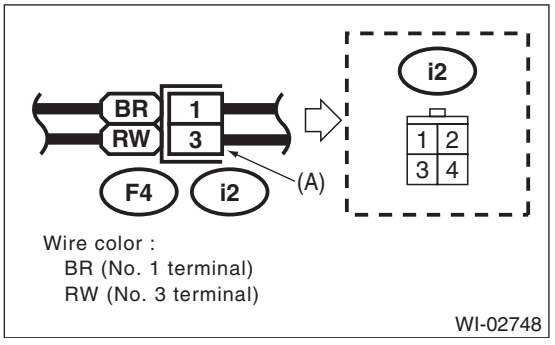

• In the wiring diagram, connectors which have no terminal number refer to one-pole types. Sketches of these connectors are omitted intentionally.

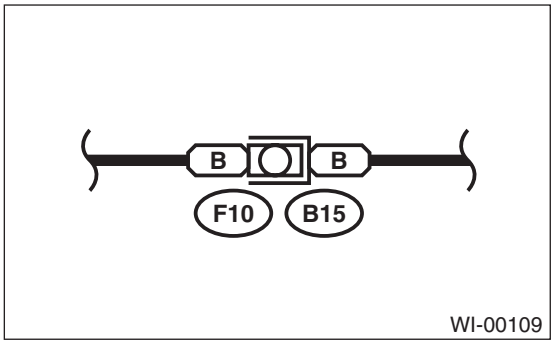

• The following color codes are used to indicate the colors of the wires.

Color code	Color
L	Blue
B	Black
Y	Yellow
G	Green
R	Red
W	White
Br	Brown
Lg	Light green
Gr	Gray
P	Pink
Or	Orange
Sb	Light blue
V	Violet
SA	Sealed (inner)
SB	Sealed (outer)

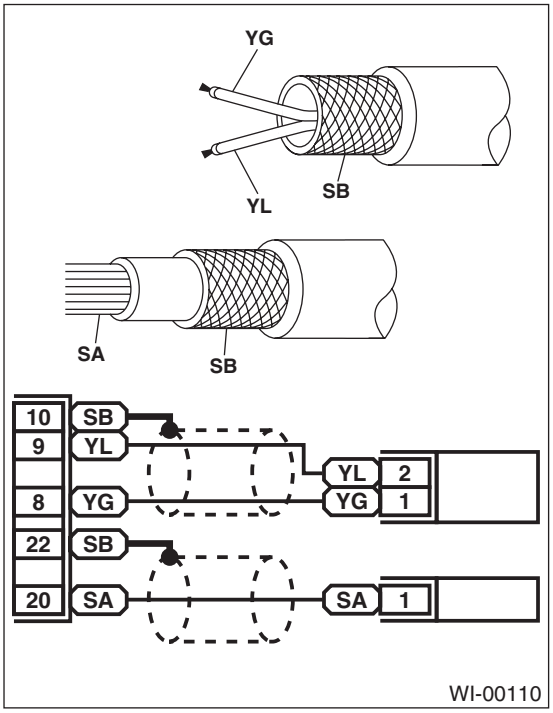

• The wire color code, which consists of two letters (or three letters including Br or Lg), indicates the standard color (base color of the wire covering) by its first letter and the stripe marking by its second letter.

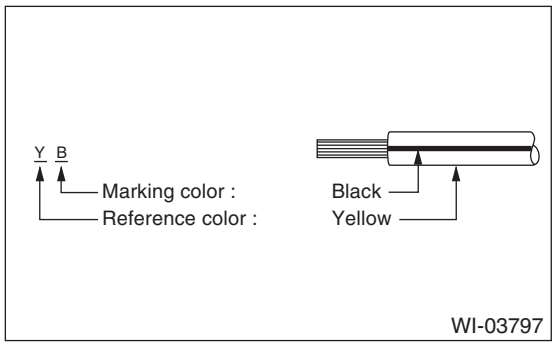

• The table lists the nominal sectional areas and allowable currents of the wires.

CAUTION:
When replacing or repairing a wire, be sure to use the same size and type of the wire which was originally used.

NOTE:
• The allowable current in the table indicates the tolerable amperage of each wire at an ambient temperature of 40°C (104°F).
• The allowable current changes with ambient temperature. Also, it changes if a bundle of more than two wires is used.

Nominal sectional area mm^2	No. of strands/ strand diameter	Outside diameter of wiring mm	Allowable current Amps/ 40°C (104°F)
0.3	7/0.26	1.8	7
0.5	7/0.32	2.2 (or 2.0)	12
0.75	30/0.18	2.6 (or 2.4)	16
0.85	11/0.32	2.4 (or 2.2)	16
1.25	16/0.32	2.7 (or 2.5)	21
2	26/0.32	3.1 (or 2.9)	28
3	41/0.32	3.8 (or 3.6)	38
5	65/0.32	4.6 (or 4.4)	51
8	50/0.45	5.5	67

• Each unit is either directly grounded to the body or indirectly grounds through a harness ground terminal. Different symbols are used in the wiring diagram to identify the two grounding systems.

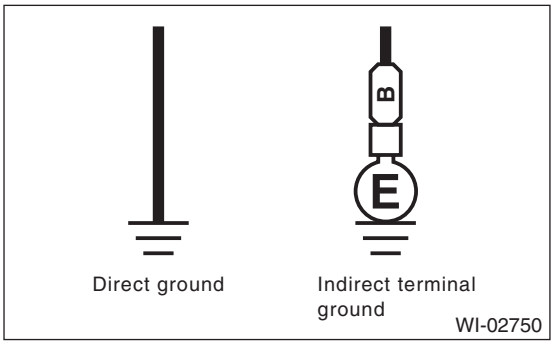

• The ground points shown in the wiring diagram refer to the following:

NOTE:
All wiring harnesses are provided with a ground point which must be securely connected.

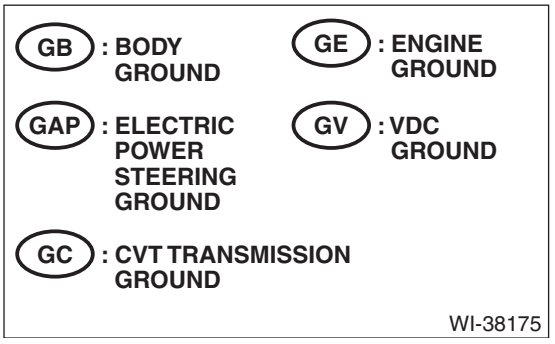

- Relays are classified as normally-open or normally-closed.

The normally-closed relay has one or more contacts. The wiring diagram shows the relay mode when the energizing circuit is OFF.

Relay type		Energizing circuit OFF	Energizing circuit ON
Normally-open type	4-pole	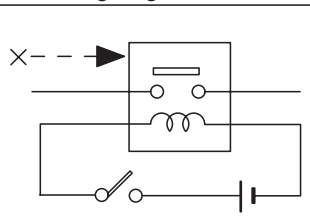	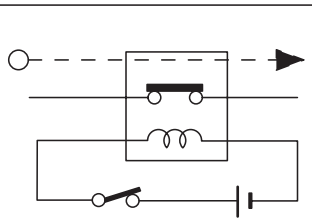
	6-pole	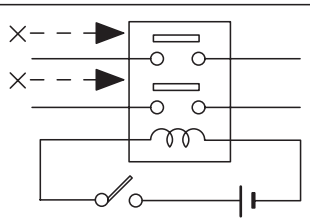	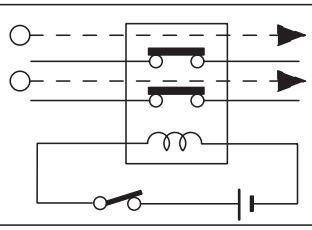
Normally-closed type	4-pole	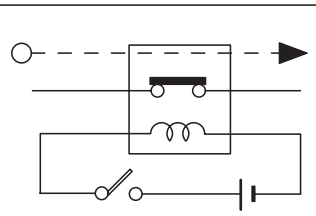	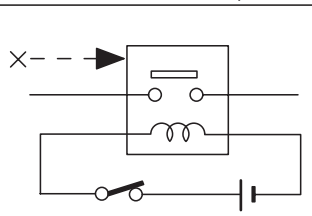
Mixed type	6-pole	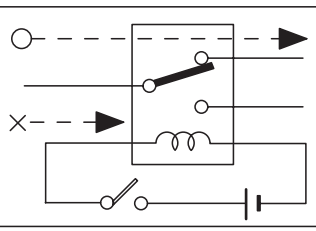	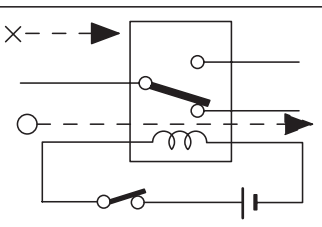

Key to symbols:

○ ⟶ : Current flows.

× ⟶ : Current does not flow.

WI-16724

• Each connector number shown in the wiring diagram corresponds to that in the wiring harness. The location of each connector in the actual vehicle is determined by reading the first character of the connector (for example, a “F” for F8, “i” for i16, etc.) and the type of wiring harness. The first character of each connector number corresponds to the area or system of the vehicle.

Symbol	Wiring harness and cord
F	Front wiring harness
B	Bulkhead wiring harness
E	Engine wiring harness
T	Transmission cord
D	Door cord LH & RH, Rear gate cord Rear door cord LH & RH, Rear defogger cord
i	Instrument panel wiring harness
R	Rear wiring harness, Fuel tank cord, Roof cord, Rear gate cord
AB	Airbag wiring harness

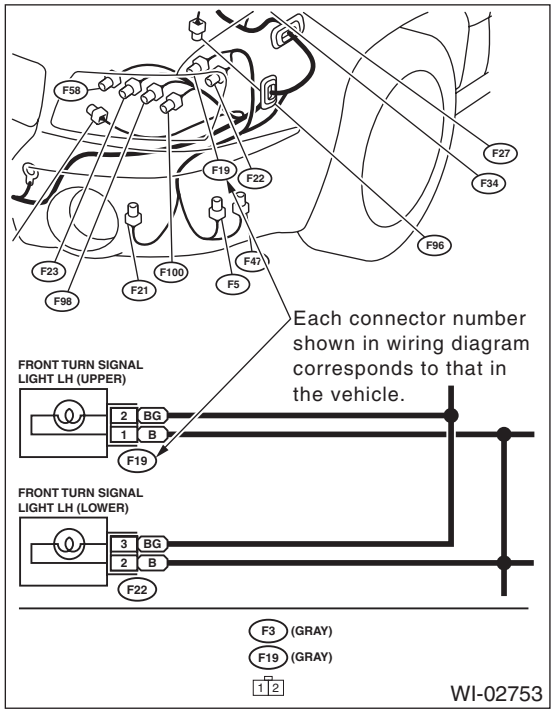

D: SYMBOLS IN WIRING DIAGRAMS

A number of symbols are used in each wiring diagram to easily identify parts or circuits.

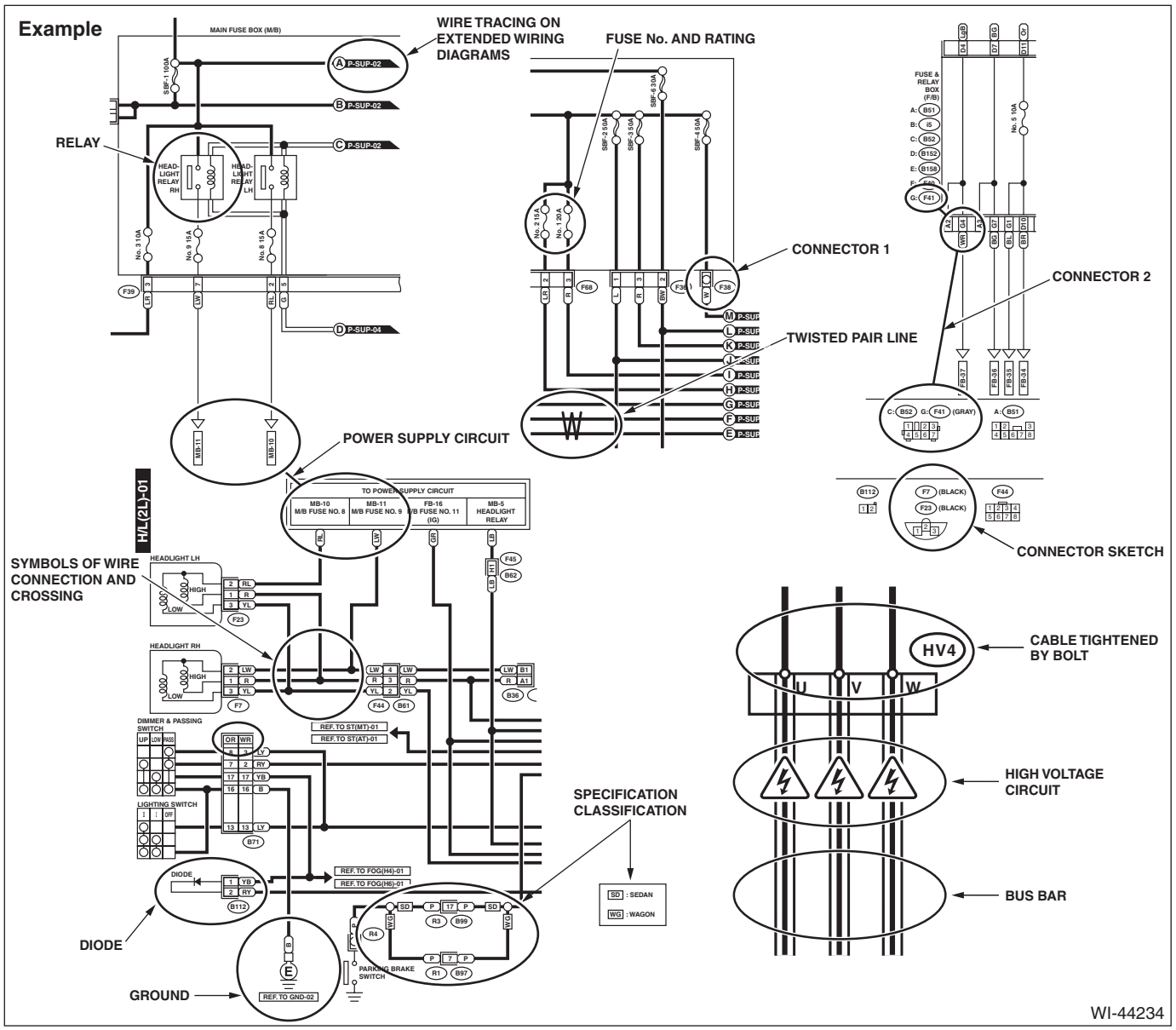

1. RELAY

A symbol used to indicate a relay.

2. CONNECTOR 1

The sketch of the connector indicates the one-pole types.

3. WIRING CONNECTION

Some wiring diagrams are indicated in foldouts for convenience. Wiring destinations are indicated where necessary by corresponding symbols. (When two pages are needed for clear indication)

4. FUSE NO. & RATING

The “FUSE No. & RATING” corresponds with that used in the fuse box (main fuse box, fuse and joint box).

5. CONNECTOR 2

- Each connector is indicated by a symbol.
- Each terminal number is indicated in the corresponding wiring diagram in an abbreviated form.
- For example, terminal number “G4” refers to No. 4 terminal of connector (G: F41) shown in the connector sketch.

6. CONNECTOR SKETCH

- Each connector sketch clearly identifies the shape and color of a connector as well as terminal locations. Non-colored connectors are indicated in natural color.
- When more than two types of connector number are indicated in a connector sketch, it means that the same type connectors are used.

7. GROUND

Each grounding point can be located easily by referring to the corresponding wiring harness.

8. DIODE

A symbol is used to indicate a diode.

9. WIRE TRACING ON EXTENDED WIRING DIAGRAMS

For a wiring diagram extending over at least two pages, a symbol (consisting of the same characters with arrows), facilitates wire tracing from one page to the next.

A ←→ A, B ←→ B

10.SYMBOLS OF WIRE CONNECTION AND CROSSING

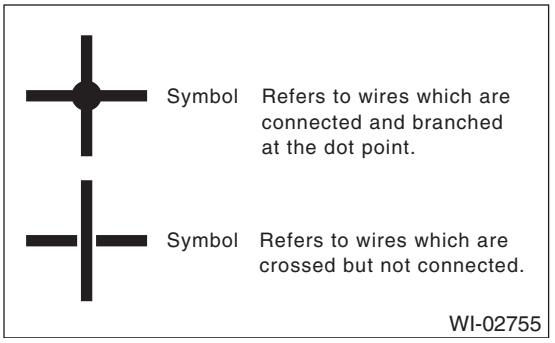

11.POWER SUPPLY CIRCUIT

A symbol is used to indicate the power supply in each wiring diagram.

“MB – 5”, “MB – 6”, etc., which are used as power-supply symbols throughout the text, correspond with those shown in the “DC POWER SUPPLY CIRCUIT” in the wiring diagram.

Accordingly, using the “DC POWER SUPPLY CIRCUIT” and wiring diagrams permits service personnel to understand the entire electrical arrangement of a system.

12.CLASSIFICATION BY SPECIFICATION

When the wiring diagram differ according to vehicle specifications, the specification difference is described by using abbreviations.

13.TWISTED PAIR LINE

The twisted pair line is indicated by a symbol in the wiring diagrams.

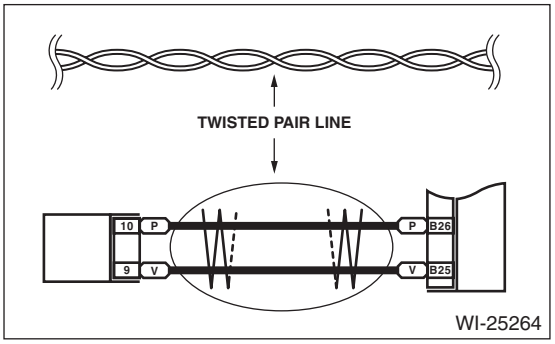

14.HIGH VOLTAGE CIRCUIT

The following signs denote high voltage circuit.

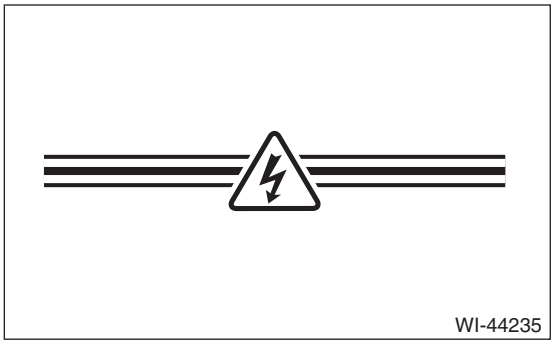

15.CABLE WITH BOLT CONNECTION

Cable connections with bolt (HV**) are denoted by (A) below. Signs for connection (HV**) are also used in location section.

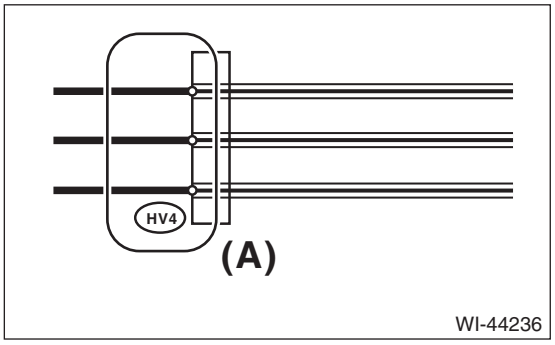

16.BUS BAR

The following signs denote bus bar.

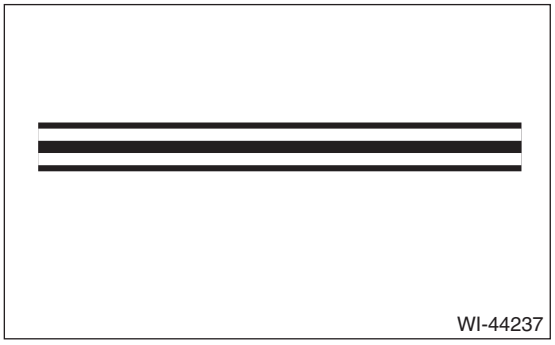

E: CONNECTOR SYMBOL IN WIRING HARNESS

A number of connector symbols are used in each wiring diagram to easily identify the wiring harness connectors.

Standard type: Female		
Pole: From 1 to 8	Pole: From 9 to 20	Pole: More than 21
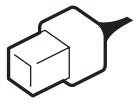	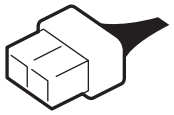	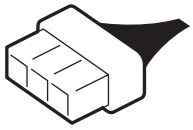
		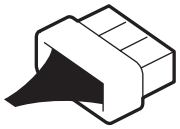
Standard type: Male		
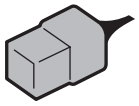	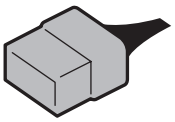	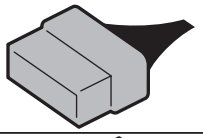
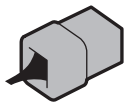	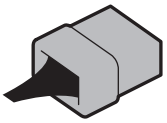	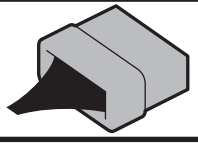

Water proof type: Female		
Pole: From 1 to 8	Pole: From 9 to 20	Pole: More than 21
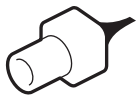		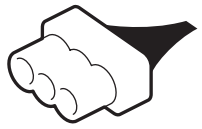
Water proof type: Male		
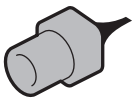	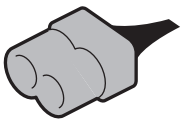	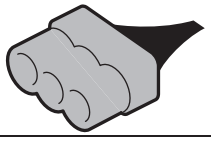
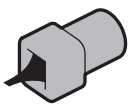	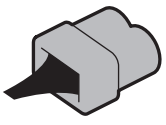	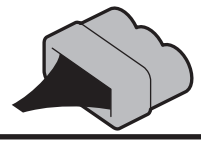

WI-02756

F: ABBREVIATION IN WIRING DIAGRAMS

Abbr.	Full name
ABS	Anti-lock Brake System
ACC	Accessory
A/C	Air Conditioner
ASSY	Assembly
AT	Automatic Transmission
A/F	Air/Fuel (air fuel ratio sensor)
ATF	Automatic Transmission Fluid
AUX	Auxiliary Audio Input Terminal
AWD	All Wheel Drive
B	Battery
BECM	Battery Energy Control Module
CAN	Controller Area Network
CM	Control Module
CVT	Continuously Variable Transmission
D	Drive range or Down
DMCM	Drive Motor Control Module
DN	Down
E	Ground
ELCM	Evaporative Leak Check Module
ECO	Economy
ECM	Engine Control Module
EEPROM	Electrically Erasable Programmable Read-Only Memory
EGR	Exhaust Gas Recirculation
F/B	Fuse & Relay Box
FL	Front Left
FR	Front Right
G	Gravity (G sensor)
H/L	Headlight
HI	High
HPCM	Hybrid Powertrain Control Module
I/F	Interface
IG	Ignition
INT	Intermittent
ISG	Integrated Starter Generator
ISO	International Organization for Standardization
J/C	Joint Connector
LCD	Liquid Crystal Display
LH	Left Hand
LO	Low
LWR	Lower
M	Motor
M/B	Main Fuse Box
MFD	Multi Function Display
MT	Manual Transmission
N	Neutral Range
NAVI	Navigation
OP	Open or Optional Parts

Abbr.	Full name
P	Parking or Parking range
PASS	Passing
PCV	Positive Crankcase Ventilation Valve
R	Reverse Range
RH	Right Hand
RL	Rear Left
RR	Rear Right
SBF	Slow Blow Fuse
ST	Starter
SW	Switch
TCM	Transmission Control Module
TFT	Thin Film Transistor
TPMS	Tire Pressure Monitor System
UPR	Upper
VDC	Vehicle Dynamics Control
WASH	Washer

2. Working Precautions

A: PRECAUTIONS WHEN WORKING WITH THE PARTS MOUNTED ON THE VEHICLE

1) When working under a vehicle which is jacked-up, always be sure to use rigid rack.
2) The parking brake must always be applied during working. Also, in automatic transmission vehicles, keep the select lever set to the P (Parking) range.
3) Be sure the workshop is properly ventilated when running the engine. Further, be careful not to touch the belt or fan while the engine is operating.
4) Be careful not to touch hot metal parts, especially the radiator and exhaust system immediately after the engine has been turned off.

B: PRECAUTIONS IN TROUBLE DIAGNOSIS AND REPAIR OF ELECTRIC PARTS

1) The battery cable must be disconnected from the battery's (–) terminal, and the ignition switch must be set to the OFF position, unless otherwise required by the diagnostics.
2) Securely fasten the wiring harness with clamps and clips so that the harness does not interfere with the body end parts, edges, bolts or screws.
3) When installing parts, be careful not to catch them on the wiring harness.
4) When disconnecting a connector, do not pull the wires, but pull while holding the connector body.

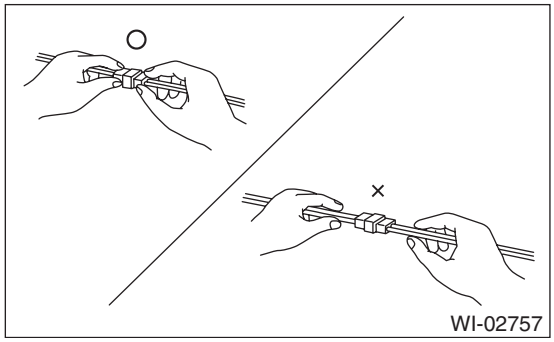

5) Some connectors are provided with a lock. One type of such a connector is disconnected by pushing the lock, and the other, by moving the lock up. In either type the lock shape must be identified before attempting to disconnect the connector.
To connect, insert the connector until it snaps and confirm that it is connected securely.

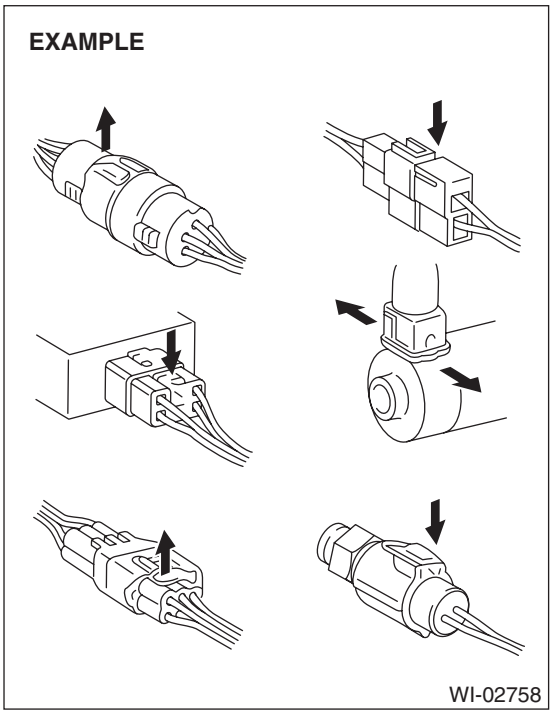

6) When checking continuity between connector terminals, or measuring voltage across the terminal and ground, always touch tester probe(s) to terminals from the wiring connection side. If the probe is too thick to gain access to the terminal, use "mini" test leads.
To check water-proof connectors (which are not measurable from the wiring side), touch test probes on the terminal side and be careful not to bend or damage the terminals.

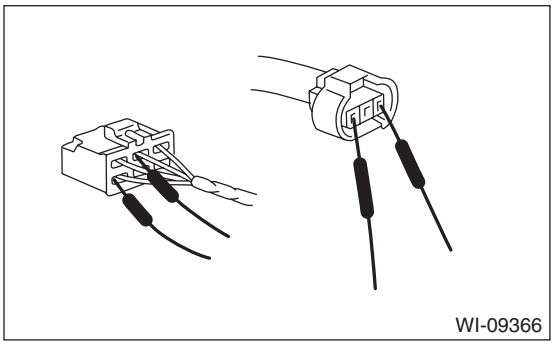

7) Sensors, relays, electrical unit, etc., are sensitive to strong impacts.
Handle them with care so that they are not dropped or mishandled.
8) For inspection of airbag system, always refer to “CAUTION” of “General Description” under AIR-BAG SYSTEM in the service manual for the same model to prevent malfunctioning.
9) When measuring the voltage or resistance of individual sensor or all electrical control modules, use a tapered pin with a diameter of 0.6 mm (0.024 in) or less and touch it to the tip of terminal. Never insert the tapered pin into the terminal at this time. Doing so may cause internal deformation and a malfunction can occur.

C: PRECAUTIONS REGARDING THE HYBRID SYSTEM

1. PRECAUTIONS FOR MAINTENANCE

The hybrid system includes a high voltage circuit. Mishandling may cause electric shocks and leakage. Therefore, perform proper operations by following procedures in this manual.

- Engineers are required to receive a special training in order to perform maintenance of high voltage system.
- All the harnesses and connectors for power cables are orange in color. In addition, caution labels indicating [High Voltage] are attached on the High voltage battery and its battery cover. Do not touch the wires and parts related to high voltage carelessly.
- Use great care when handling the high voltage system power supply circuits shown in the figure below.

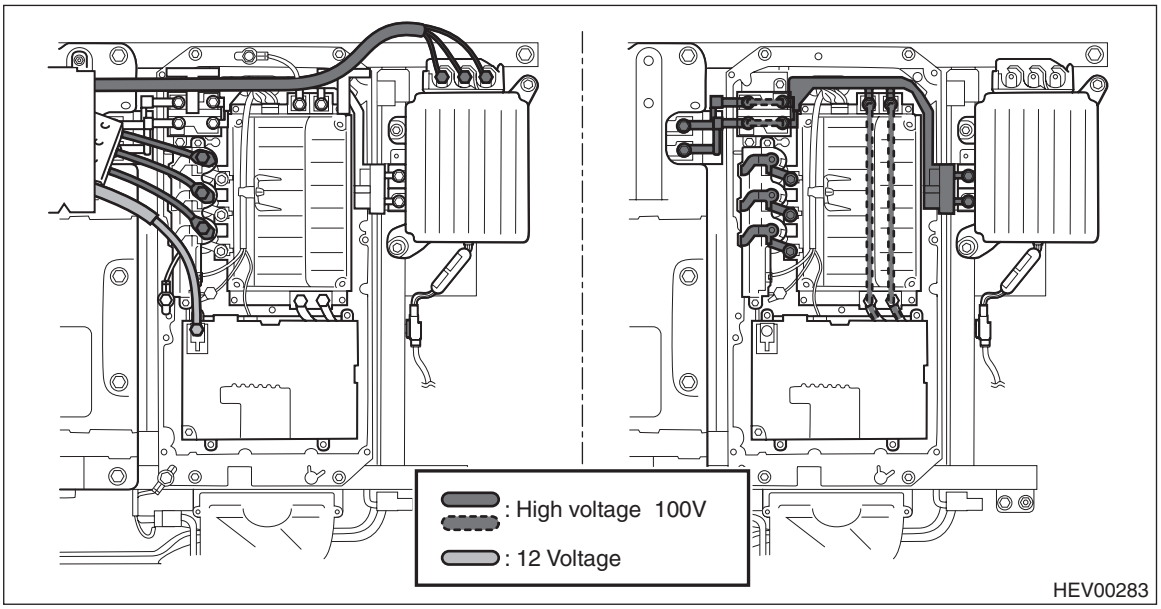

- When performing maintenance of the high voltage system, make sure to take measures for preventing electrocution, by wearing insulated gloves, removing the service disconnect plug, etc. In addition, carry the removed service disconnect plug in your pocket in order to prevent other servicemen from accidentally installing during work.

NOTE:
Do not turn the ignition to ON with the service disconnect plug removed in order to prevent malfunctions.

- After removing the service disconnect plug, be sure to wait for ten minutes before touching the high voltage connectors and terminals.

NOTE:
This time allows the high voltage condenser in the inverter to discharge.

- When wearing insulated gloves for work, make sure there is no holes or damages on the gloves.
- During the work, do not carry any metallic products, such as mechanical pencils and scales, which may be dropped and may cause short.
- Parts with high voltage and strong magnetic force are used. Therefore, during the work, do not carry any metallic products that may cause short, or magnetic recording media (such as cash cards and prepaid cards) whose magnetic record may get destroyed.
- When touching the high voltage terminals without insulation covering, make sure, in advance, to wear insulated gloves and to confirm that the voltage is 0 V using an insulation multimeter.
- Insulate the high voltage connectors and terminals with insulating tape immediately after removing.
- Be sure to tighten the high voltage screw terminals firmly to the specified torque. Lack of, or excess torque causes failures.
- Be careful not to allow foreign matter to enter the battery.
- Make sure to insulate the power cable terminals by wrapping insulating tape around.
- To work on the high voltage wire connections, use insulated tools, or wrap tools with vinyl tape for insulation before use.
- When using tools wrapped with vinyl tape as alternatives to insulated tools, cover tools with the standardized product, pressure-sensitive polyvinyl chloride tapes for electrical purposes (JIS C2336), and confirm the insulated condition before working, using an insulation multimeter.
- When inspecting insulated gloves, make sure there is no cracks, breakage, other damages, or air leakage by rolling insulated gloves from the opening side up to the wrist area and pressing the inflated portion. Do not use wet insulated gloves.

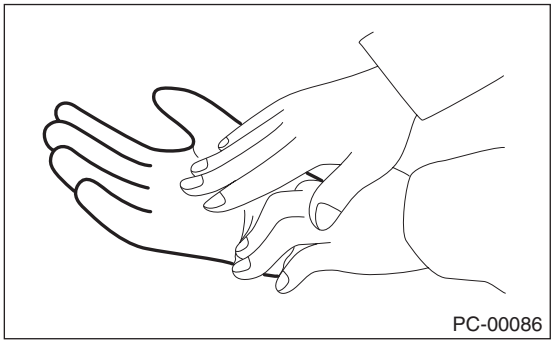
PC-00086

- When performing work, wear or use insulated gloves, protective goggles, and rubber boots for electrical purposes, insulated protective shoes or insulating rubber sheet.
- Even after the service disconnect plug is removed, make sure to wear insulated gloves during maintenance of all the parts inside the cover including the battery cover, and of underfloor power cable. (Maintenance of the high voltage battery cooling fan and cooling duct parts outside the battery cover, and the drive motor control module parts does not require to wear insulated gloves even in the compartment, because the voltage is 12 V only.)
- For maintenance of engine compartment and of CVT unit except for the power cable, insulated gloves are not required.

• During the work for the high voltage system, make sure to alert other servicemen to take precautions, for instance by displaying [HIGH VOLTAGE WORK. DO NOT TOUCH] on the vehicle. (An example is shown. Make a photocopy for use.)

HIGH VOLTAGE CAUTION LABEL

Person in charge: _____

CAUTION:
HIGH VOLTAGE.
DO NOT TOUCH
DURING OPERATION

CAUTION:
HIGH VOLTAGE.
DO NOT TOUCH
DURING OPERATION

Person in charge: _____

Copy this page and put it after folding on the roof of the vehicle in service.

HEV00088

• After performing work for the high voltage system, make sure to check again for misplaced parts and tools, tightening conditions of high voltage terminals, and connector connections, before connecting the service disconnect plug.

CAUTION:
Make sure the connectors are connected completely without insecurity.

• Make sure to check the positive and negative terminal connections during the battery removal and installation procedures.
• Never connect the battery in reverse polarity. Otherwise, the control module will be broken instantly, and other parts will also be damaged.
• Do not disconnect the battery cables while the engine is running. A large counter electromotive force will be generated, and this voltage may damage electronic parts such as control modules.
• When disconnecting the connectors of the electrical components, always be sure to turn the ignition switch to OFF.
• When measuring the voltage or resistance of individual sensor or all electrical control modules, use a tapered pin with a diameter of 0.6 mm (0.024 in) or less and touch it to the tip of terminal. Never insert the tapered pin into the terminal at this time. Doing so may cause internal deformation and a malfunction can occur.
• Take care not to allow water to get into the connectors when servicing or washing the vehicle in rainy weather. Avoid exposure to water even if the connectors are waterproof.
• Use the engine ground terminal or engine assembly for the grounding point when measuring the voltage and resistance in engine compartment.
• All parts related to the hybrid system are precision parts. Do not drop or otherwise apply impact. Do not reuse the parts that are dropped accidentally.
• Use the body ground bolt on the inverter frame as the grounding point, when measuring voltage and resistance in rear of the vehicle.

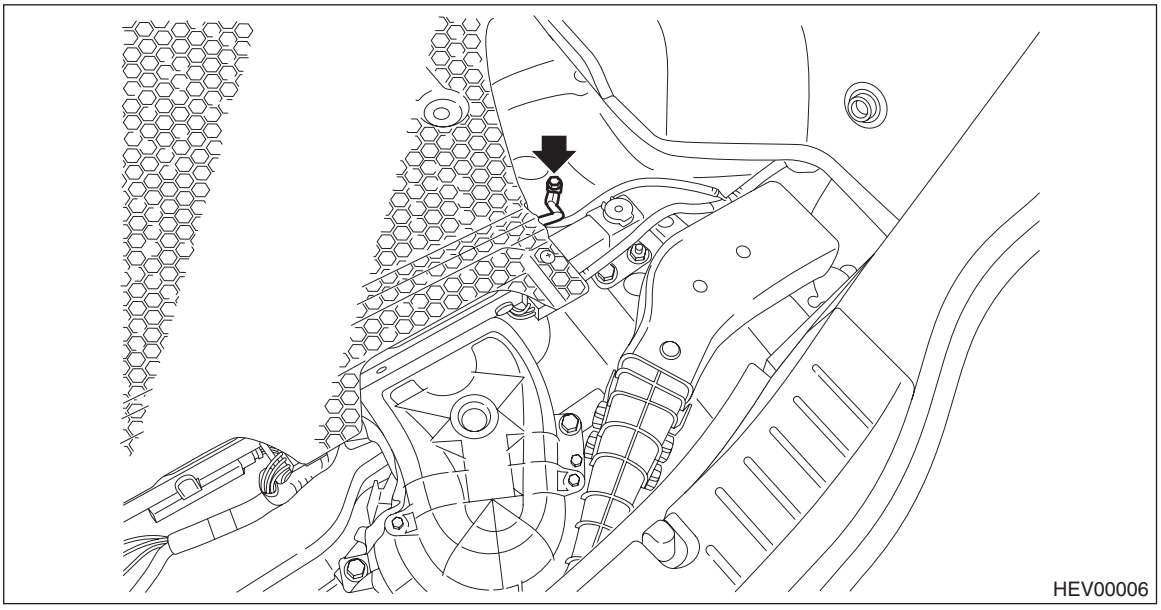

• Take the ignition key or access key out of the vehicle, except when the key is needed inside.
• When the part is replaced or the label is detached, make sure to attach a new label in the original position and direction.

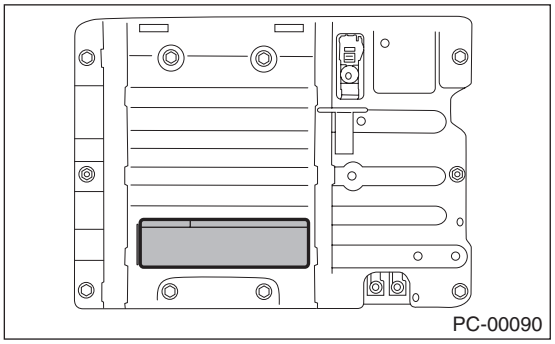

• This engine starts and stops automatically, when the Hybrid READY indicator light in the meter illuminates. Make sure to turn the ignition to OFF before performing maintenance.
• When the state of battery charge is in a good condition while the engine is warmed-up, the engine will be stopped automatically while the vehicle is stopped. Therefore, when continuous running of the engine is necessary during vehicle stoppage in the cases such as ignition timing inspection, set to «Auto Start Stop Cancel Drive Mode (Engine only or Engine + Motor)».

3. Power Supply Circuit

A: WIRING DIAGRAM

1. WITHOUT PUSH BUTTON START

- **Engine room side**

P-SUP-01

P-SUP-01

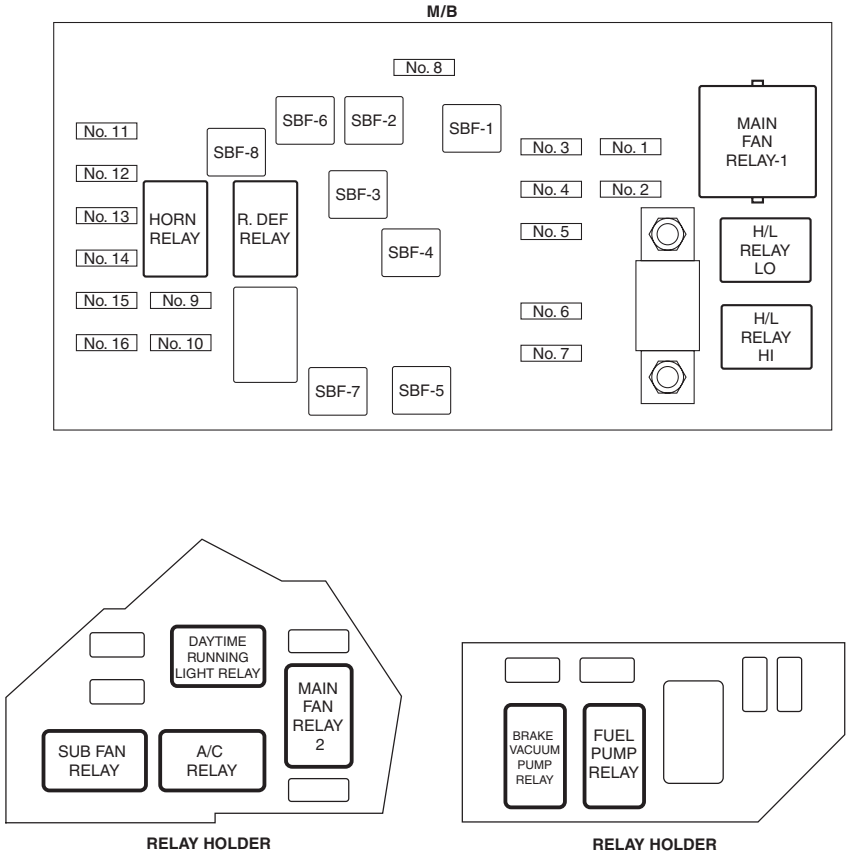

WI-41775

- **Passenger room side**

P-SUP-02

P-SUP-02

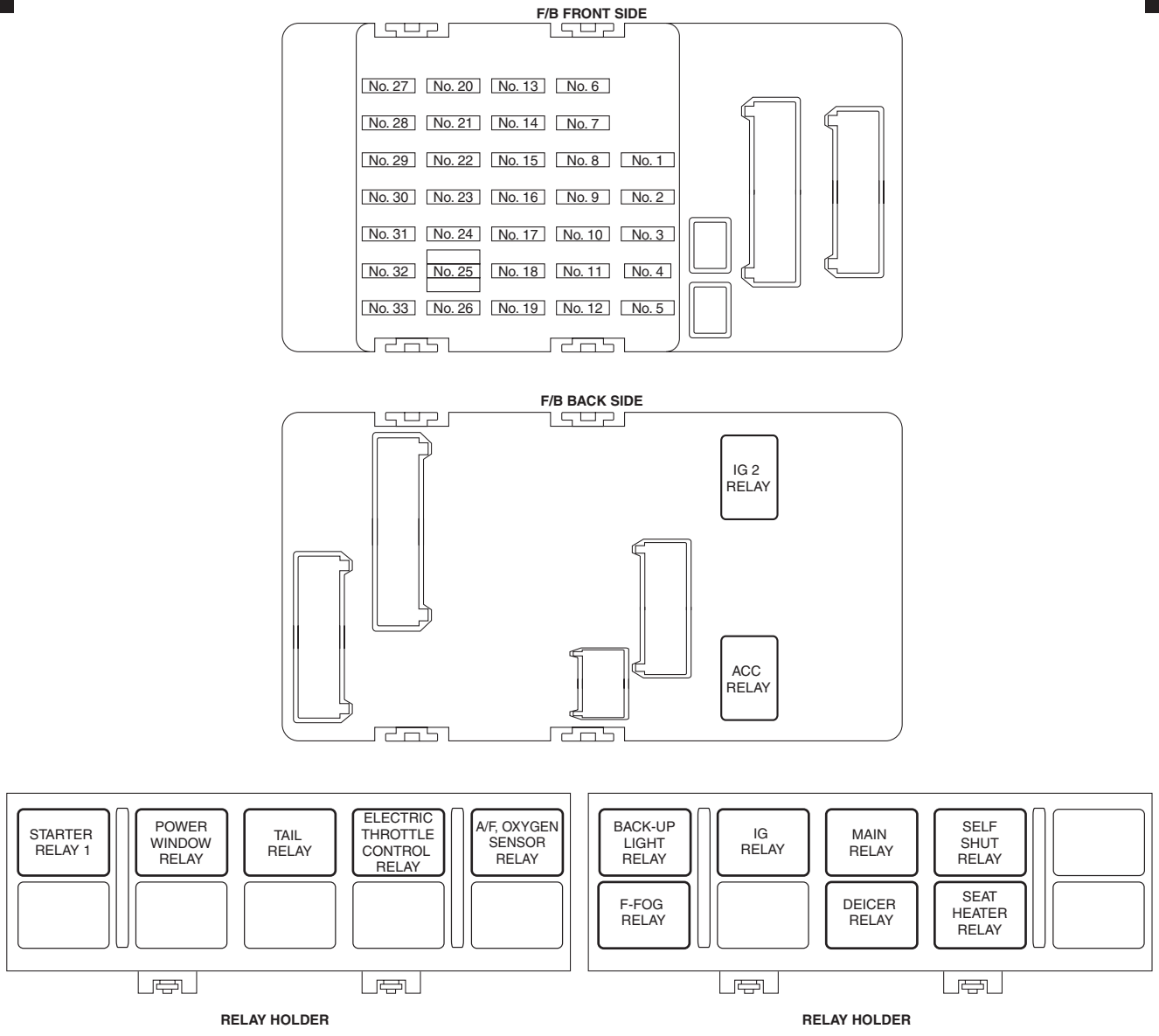

WI-41776

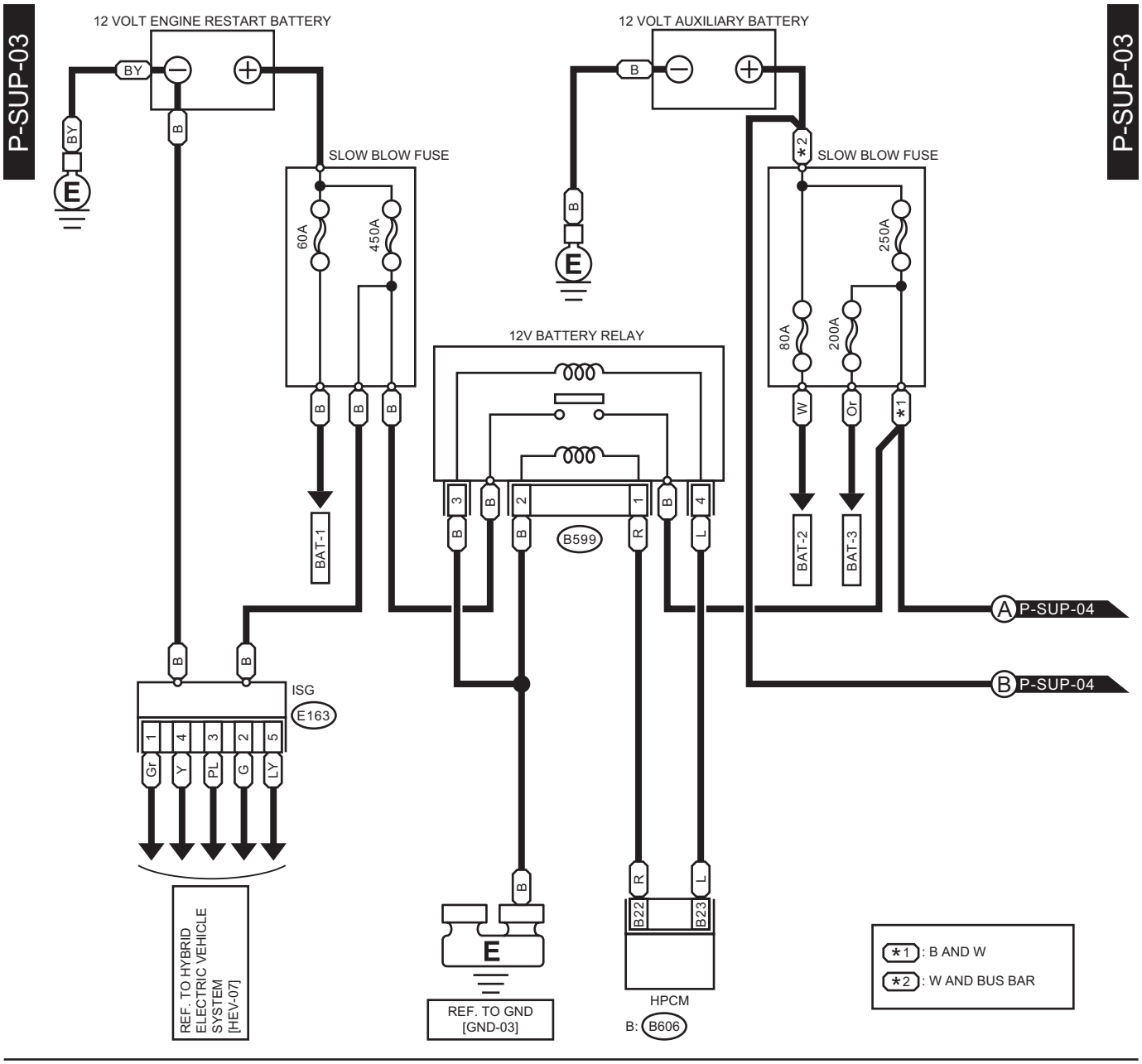
P-SUP-03
12 VOLT ENGINE RESTART BATTERY
BY
B
E
SLOW BLOW FUSE
60A
450A
B
BAT-1
12 VOLT AUXILIARY BATTERY
B
E
*2
SLOW BLOW FUSE
250A
80A
200A
W
Or
*1
BAT-2
BAT-3
12V BATTERY RELAY
3
B
2
1
B
4
B599
R
L
A P-SUP-04
B P-SUP-04
ISG
E163
1
4
3
2
5
Gr
Y
PL
G
LY
REF. TO HYBRID ELECTRIC VEHICLE SYSTEM [HEV-07]
E
REF. TO GND [GND-03]
R
L
B22
B23
HPCM
B: B606
*1 : B AND W
*2 : W AND BUS BAR

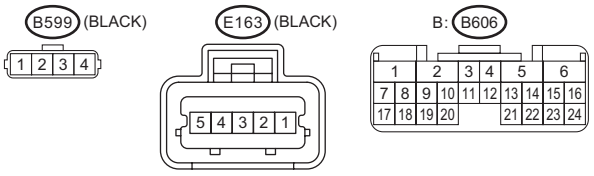
B599 (BLACK)
1 2 3 4
E163 (BLACK)
5 4 3 2 1
B: B606
1 2 3 4 5 6
7 8 9 10 11 12 13 14 15 16
17 18 19 20 21 22 23 24

WI-64620

Power Supply Circuit

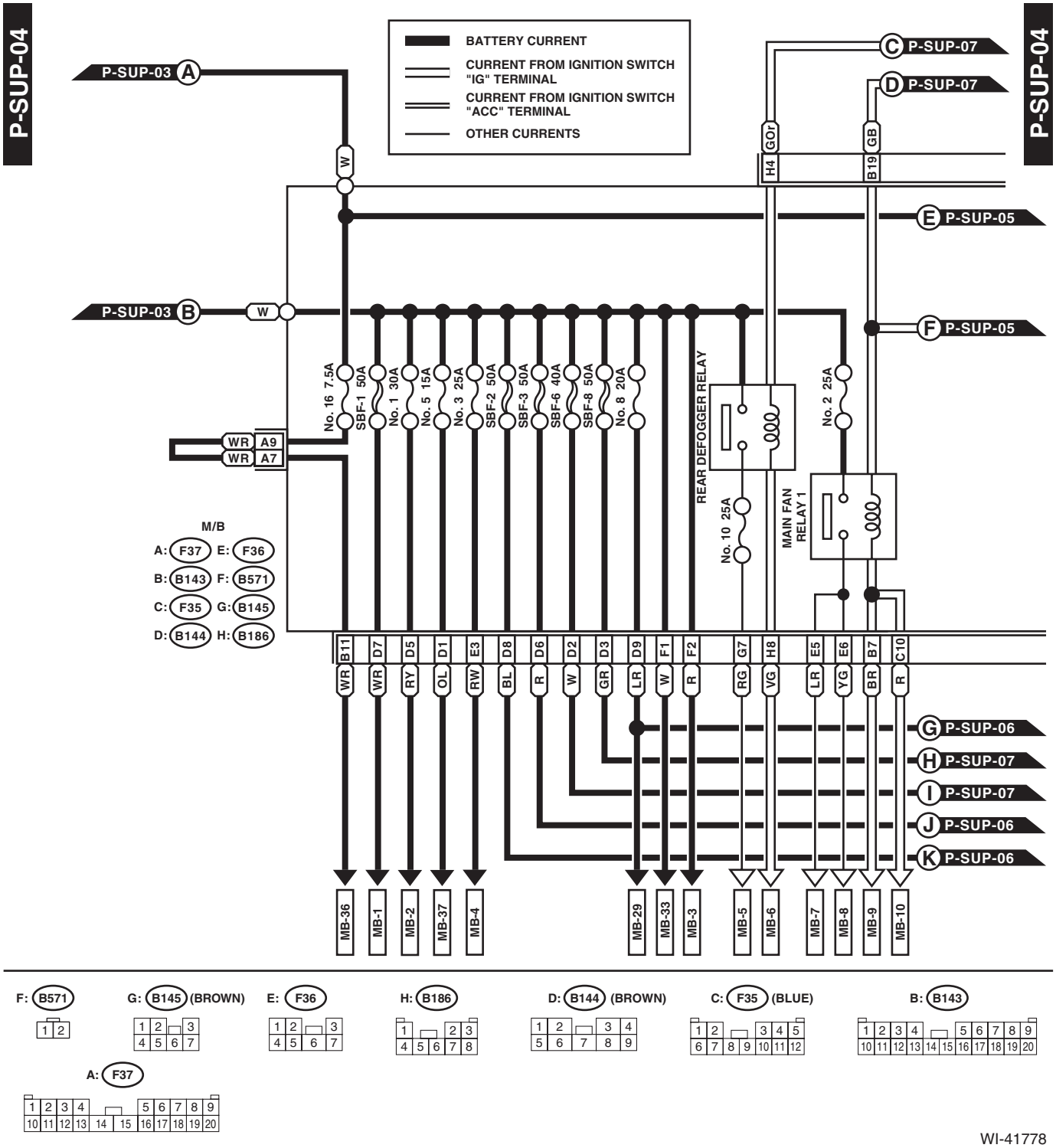

WI-41778

P-SUP-05

P-SUP-05

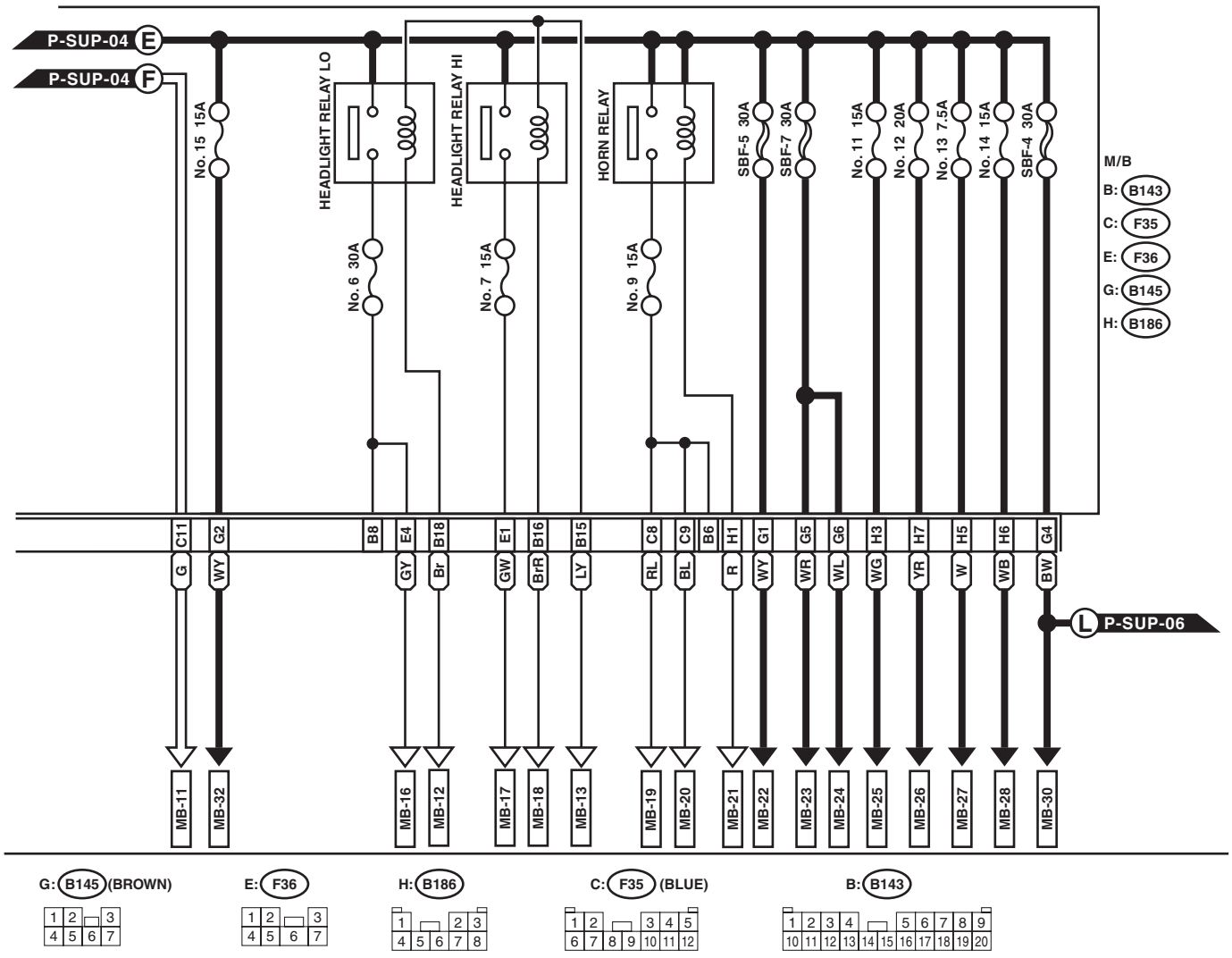

WI-48059

Power Supply Circuit

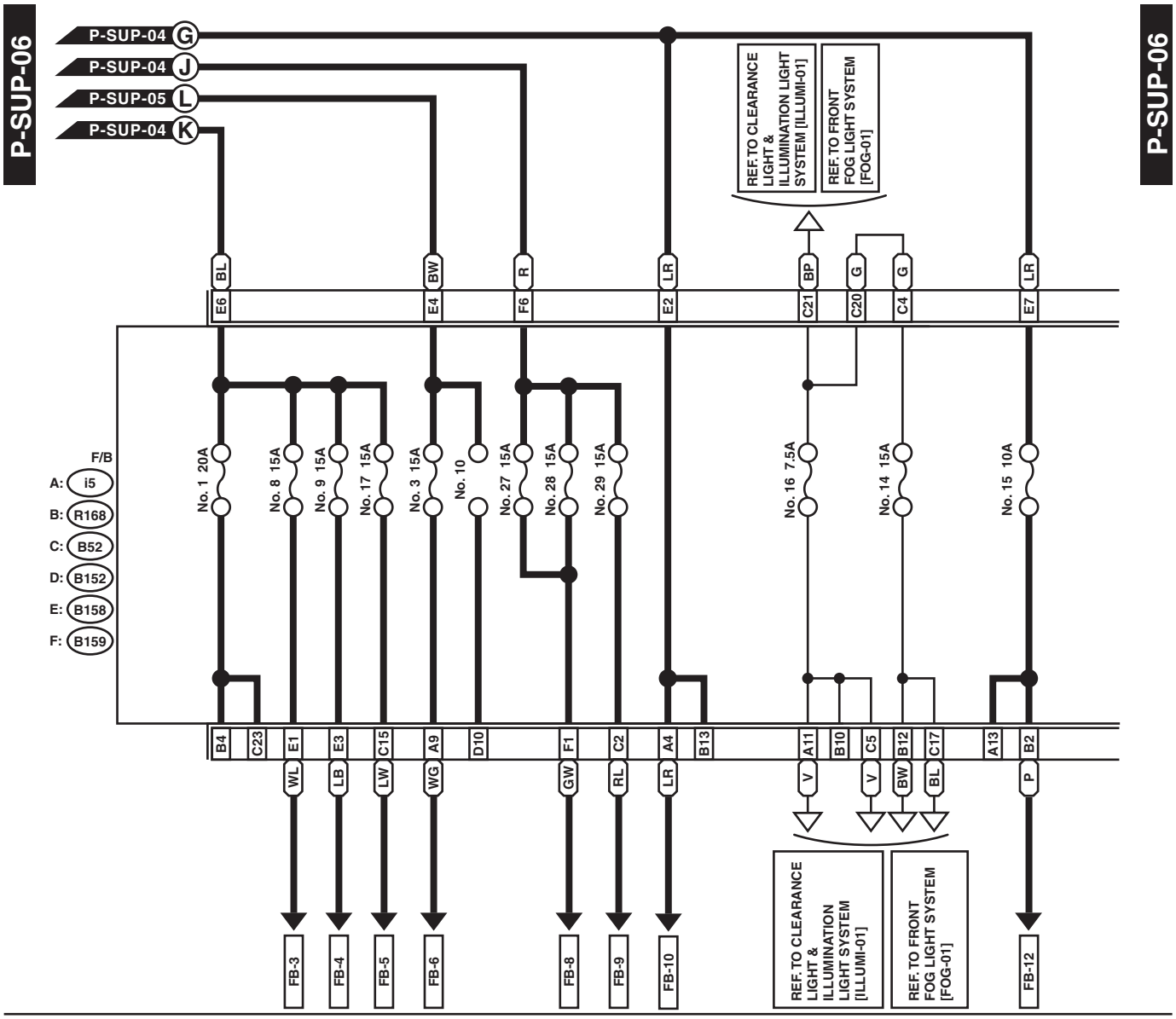

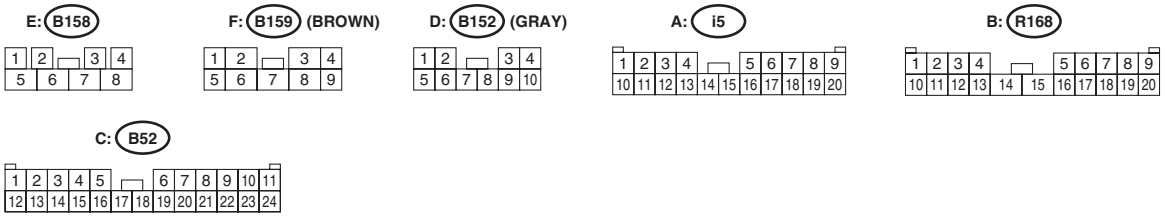

WI-48060

Power Supply Circuit

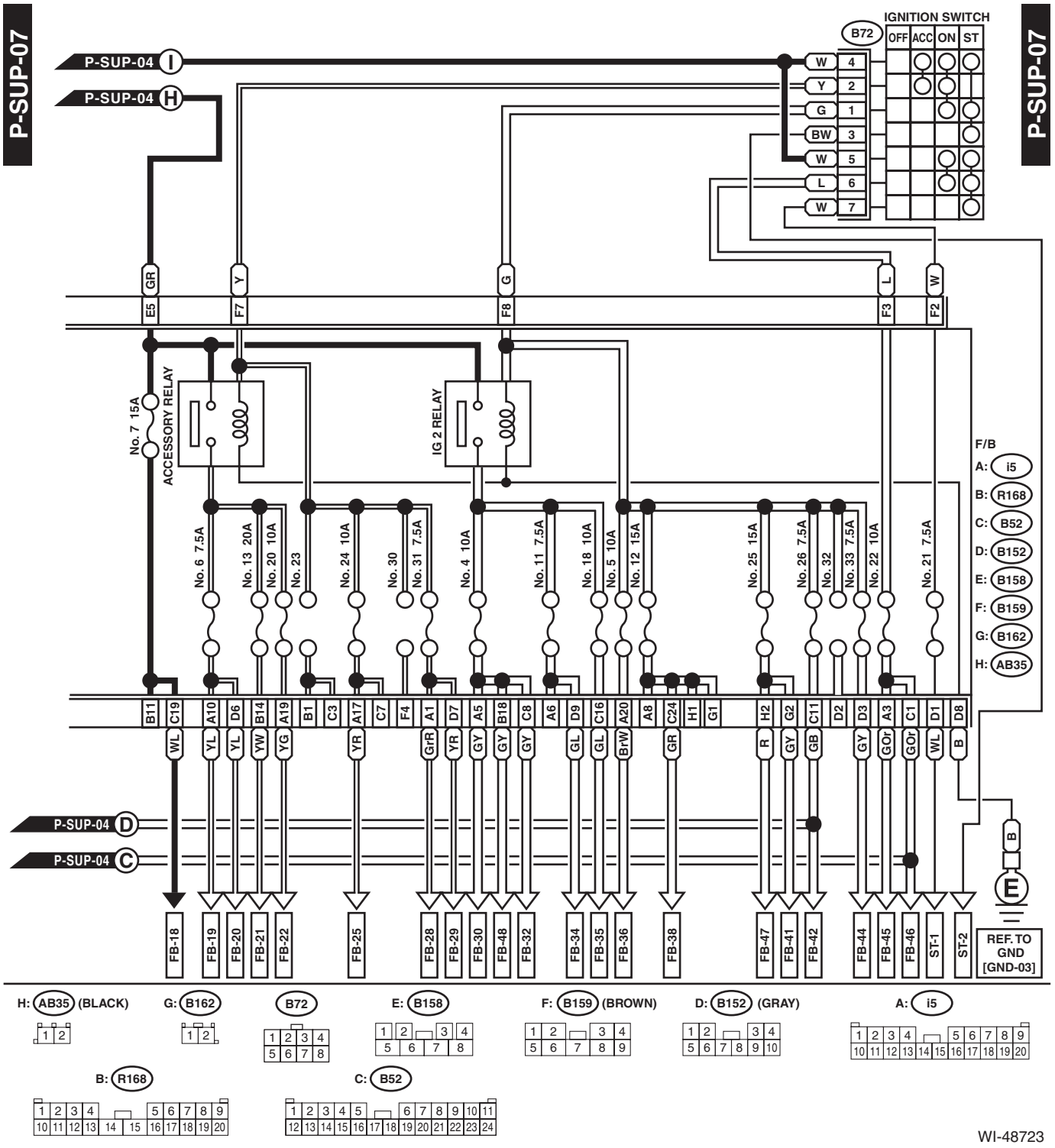

WI-48723

No.	Load
MB-1	VDC CM
MB-2	VDC CM
MB-3	Wiper relay
	Brake vacuum pump relay
MB-4	Sub fan relay
MB-5	Mirror heater LH
	Mirror heater RH
	Rear defogger
MB-6	Body integrated unit
MB-7	Main fan relay 2
MB-8	Main fan motor
MB-9	ECM
MB-10	Main fan relay 2
MB-11	Main fan relay 2
MB-12	Body integrated unit
MB-13	Body integrated unit
MB-16	Front combination light LH
	Front combination light RH
MB-17	Daytime running light relay
MB-18	Body integrated unit
MB-19	Horn
MB-20	Horn
MB-21	Horn switch
	Body integrated unit
MB-22	A/F, oxygen sensor relay
MB-23	Main relay
	IG relay
MB-24	Electronic throttle control relay
MB-25	Fuel pump relay
MB-26	TCM
	Self shut relay
MB-27	ECM
	Data link connector
MB-28	Key warning switch
	Turn signal and hazard unit
	Body integrated unit
MB-29	Spot map light
	Room light
	Body integrated unit
	Immobilizer antenna
MB-30	Power window circuit breaker
MB-32	Tail relay
	Daytime running light relay
MB-33	DMCM relay
	High voltage battery cooling fan/drive motor inverter relay
	High voltage battery
	HPCM
	ISG
MB-36	HPCM

No.	Load
MB-37	Brake vacuum pump relay
ST-1	Starter relay 1
ST-2	Starter relay 1
	HPCM
FB-3	Stop light and brake switch
FB-4	Wiper deicer relay
FB-5	Seat heater relay
FB-6	Body integrated unit
FB-8	Blower motor relay
FB-9	Front fog light relay
FB-10	Audio
	MFD
	Navigation unit
FB-12	Keyless entry CM
	Luggage room light
FB-18	Combination meter
	Body integrated unit
	Impact sensor
	Air mix door actuator LH (with left/right independent air conditioner)
	Air mix door actuator RH (with left/right independent air conditioner)
	Mode door actuator
	Air mix door actuator (without left/right independent air conditioner)
	Security CM
	A/C control panel
	Active grille shutter
FB-19	Remote control mirror switch
FB-20	Seat heater relay
	Rear view mirror
FB-21	Rear accessory power supply socket
FB-22	Front accessory power supply socket
FB-25	AUX input terminal
	Audio
	Navigation unit
FB-28	A/C control panel
FB-29	Body integrated unit
FB-30	Pedestrian alert CM
FB-32	Impact sensor
	Data link connector
	Stop light and brake switch
	Wiper deicer relay
	Sunroof motor assembly
	Sunroof switch
	Sunroof switch (tilt)
FB-34	Turn signal and hazard unit
FB-35	Back-up light relay
	Auto headlight beam leveler CM

No.	Load
FB-36	Combination meter
	MFD
	HPCM
FB-38	HPCM
	DMCM
	High voltage battery
	Electric oil pump inverter
	ECM
	TCM
	Body integrated unit
	Fuel pump relay
FB-41	Airbag CM
FB-42	Power window relay
	Wiper relay
FB-44	VDC CM
	Steering angle sensor
	Power steering CM
FB-45	A/C control panel
FB-46	A/C relay
	Sub fan relay
	Pressure switch
	Blower motor relay
FB-47	Occupant detection control module
FB-48	TPMS & keyless entry CM
BAT-1	12V engine restart battery sensor
BAT-2	Power steering CM
BAT-3	DC/DC converter

2. WITH PUSH BUTTON START

- **Engine room side**

P-SUP(P)-01

P-SUP(P)-01

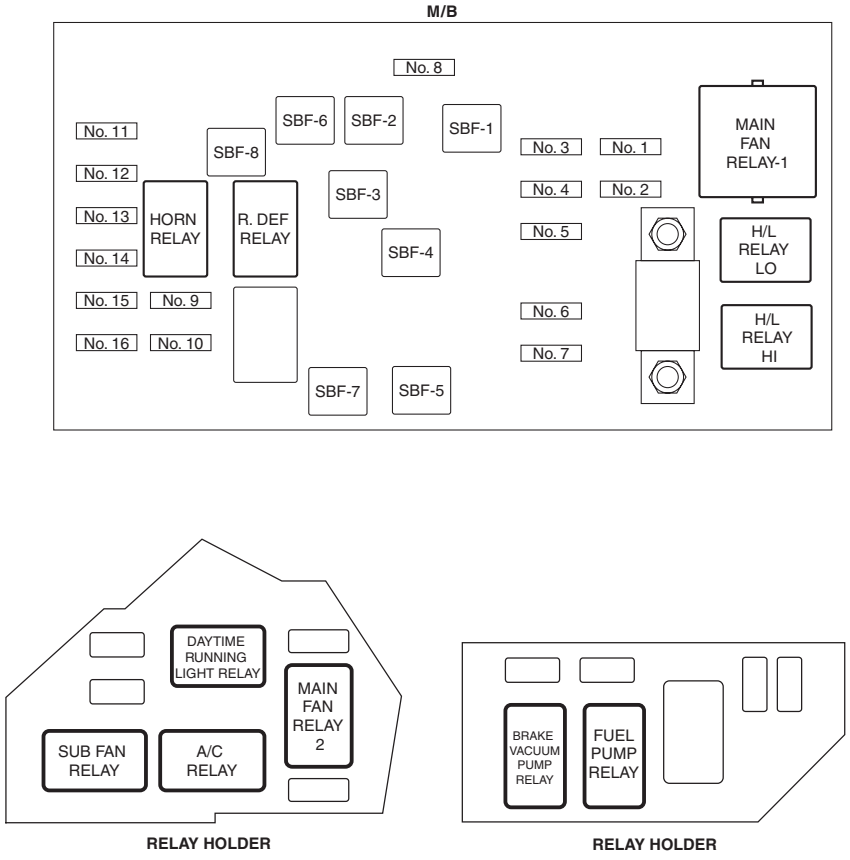

WI-41782

- **Passenger room side**

P-SUP(P)-02

P-SUP(P)-02

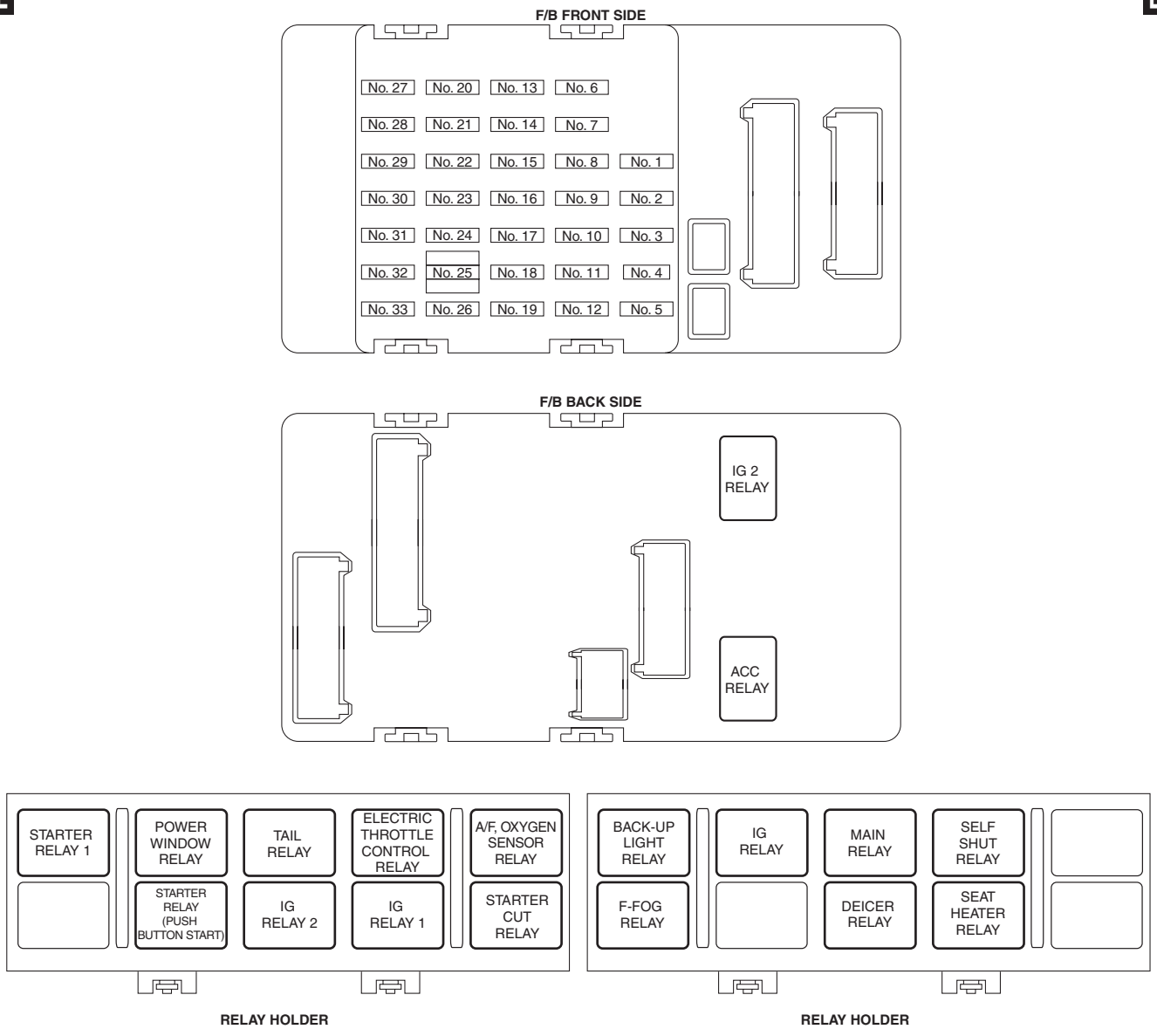

WI-41783

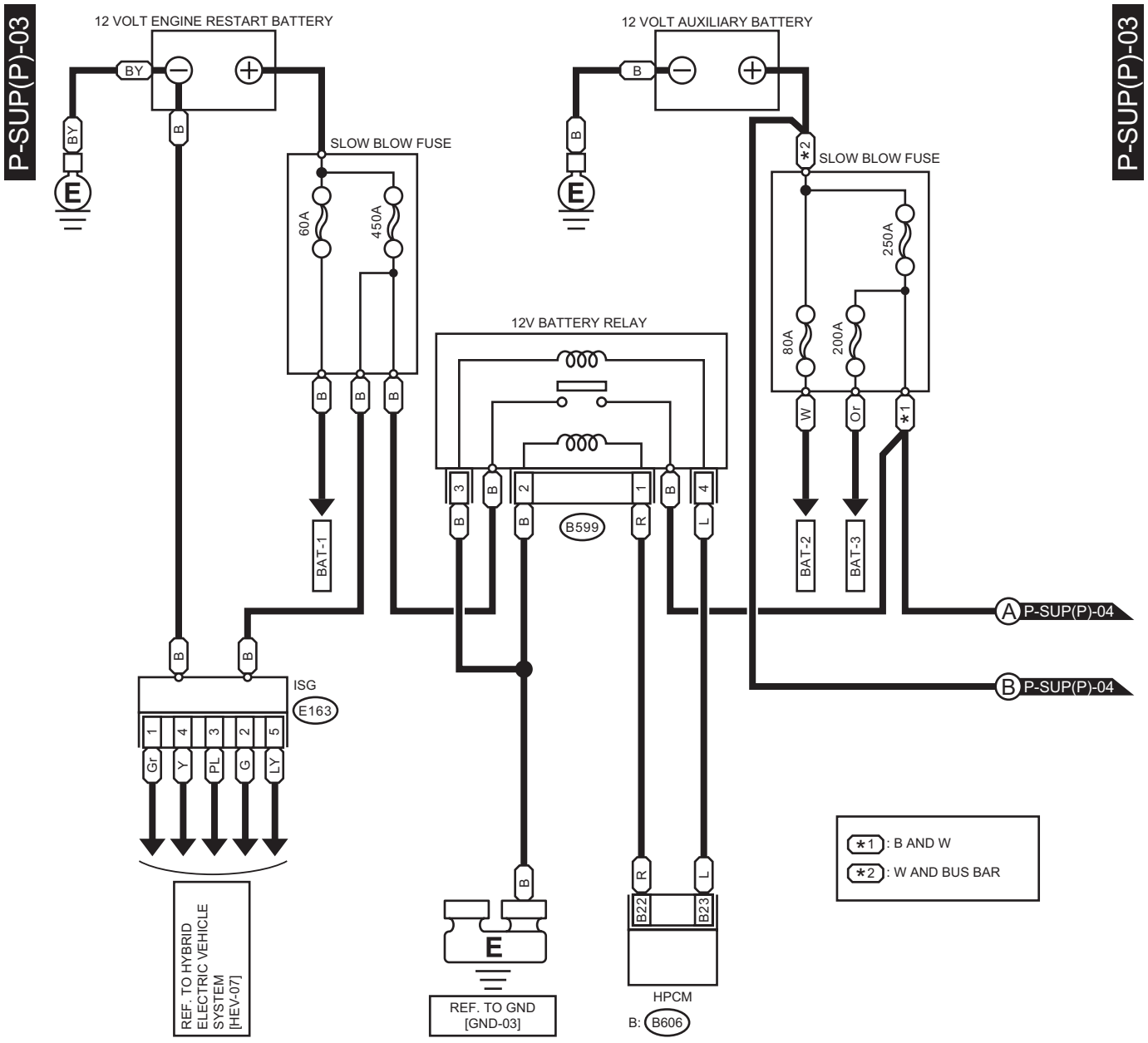
P-SUP(P)-03
12 VOLT ENGINE RESTART BATTERY
BY
B
SLOW BLOW FUSE
60A
450A
12 VOLT AUXILIARY BATTERY
B
*2
SLOW BLOW FUSE
250A
80A
200A
12V BATTERY RELAY
B599
BAT-1
BAT-2
BAT-3
W
Or
*1
A P-SUP(P)-04
B P-SUP(P)-04
ISG
E163
Gr
Y
PL
G
LY
REF. TO HYBRID ELECTRIC VEHICLE SYSTEM [HEV-07]
REF. TO GND [GND-03]
HPCM
B: B606
B22
B23
*1 : B AND W
*2 : W AND BUS BAR

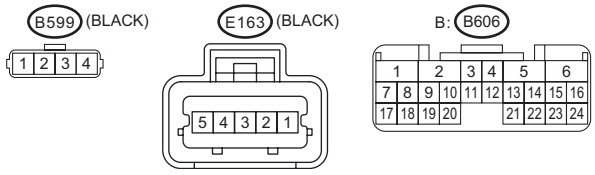
B599 (BLACK)
E163 (BLACK)
B: B606

WI-61949

Power Supply Circuit

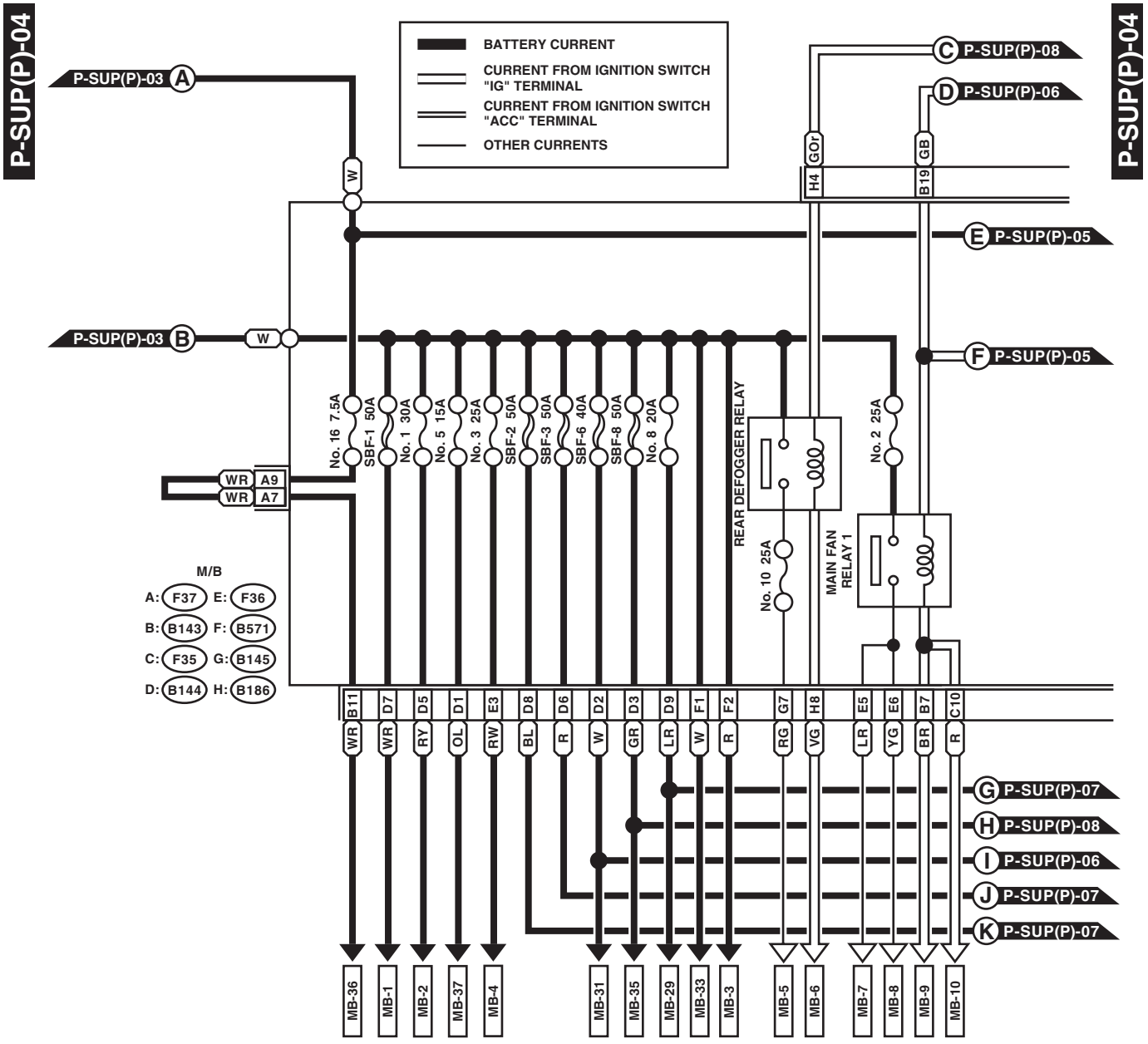

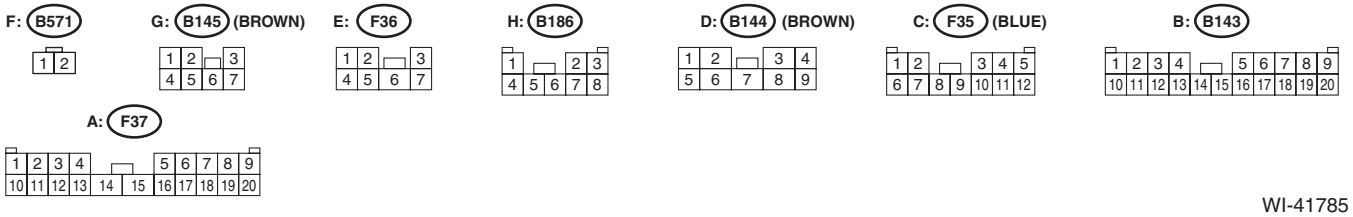

WI-41785

P-SUP(P)-05

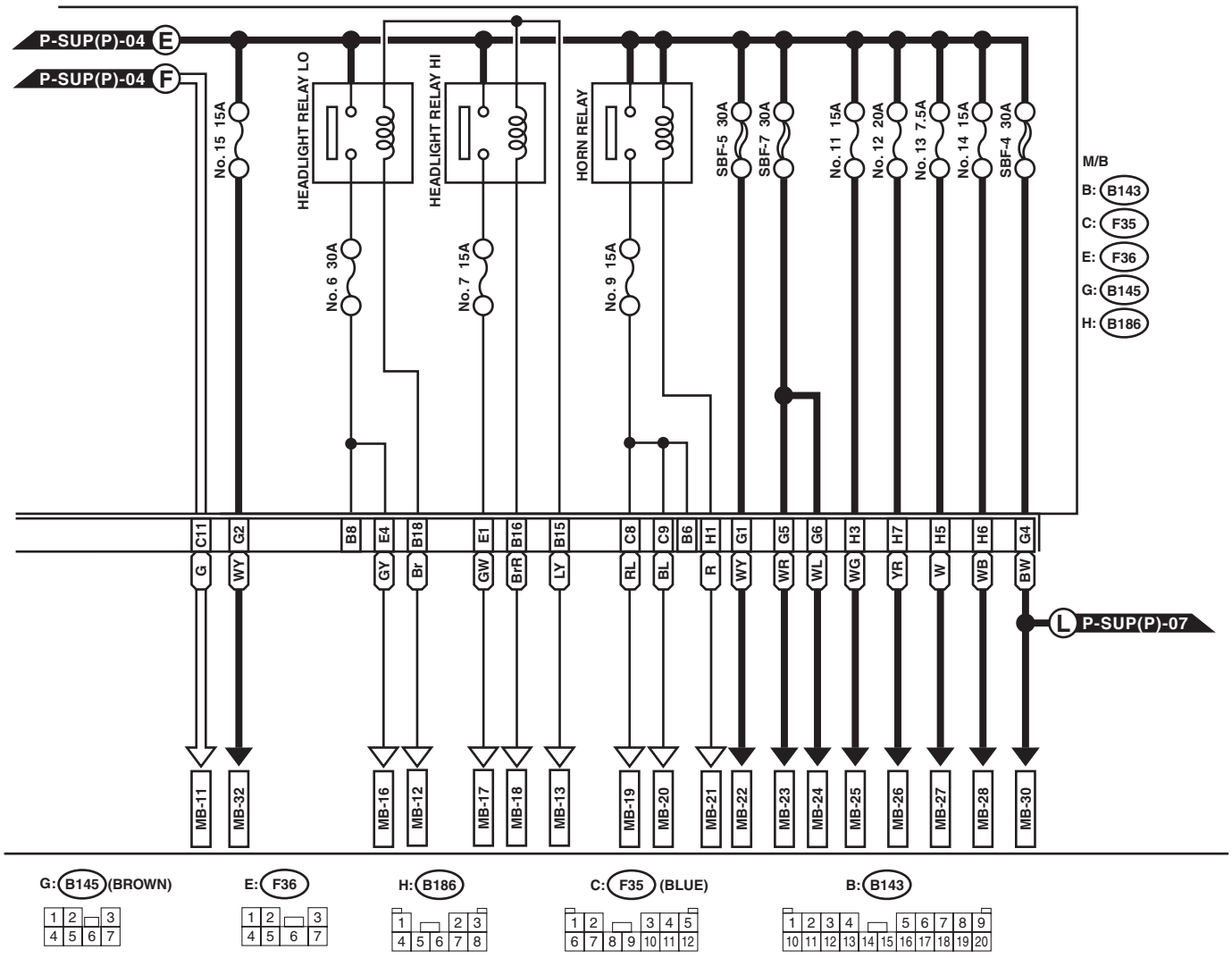

WI-48061

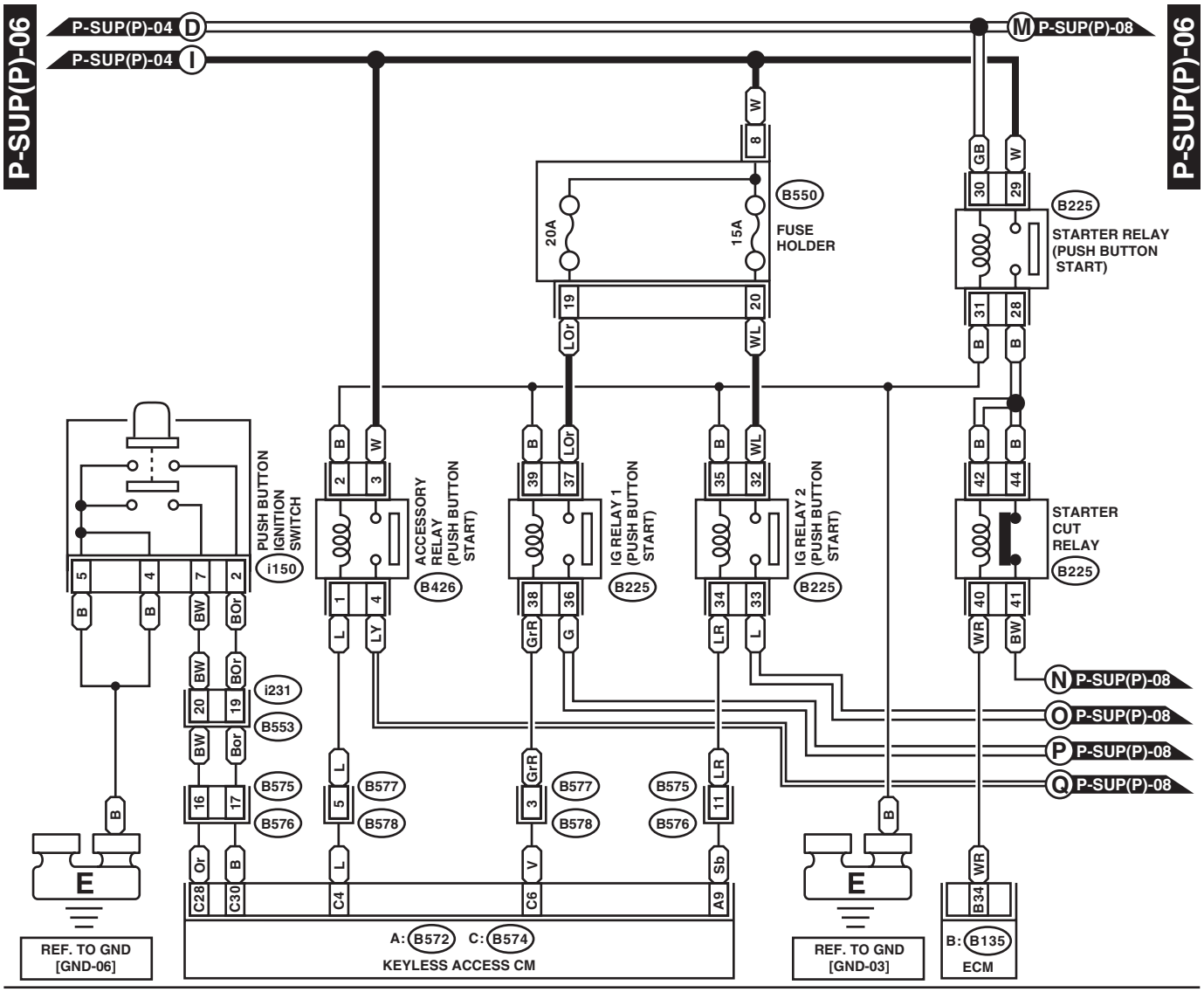
P-SUP(P)-06
P-SUP(P)-04 D
P-SUP(P)-04 I
M P-SUP(P)-08
B550
FUSE HOLDER
20A
15A
B225
STARTER RELAY (PUSH BUTTON START)
PUSH BUTTON IGNITION SWITCH
i150
ACCESSORY RELAY (PUSH BUTTON START)
B426
IG RELAY 1 (PUSH BUTTON START)
IG RELAY 2 (PUSH BUTTON START)
STARTER CUT RELAY
N P-SUP(P)-08
O P-SUP(P)-08
P P-SUP(P)-08
Q P-SUP(P)-08
i231
B553
B575
B576
B577
B578
A: B572 C: B574
KEYLESS ACCESS CM
REF. TO GND [GND-06]
REF. TO GND [GND-03]
B: B135
ECM

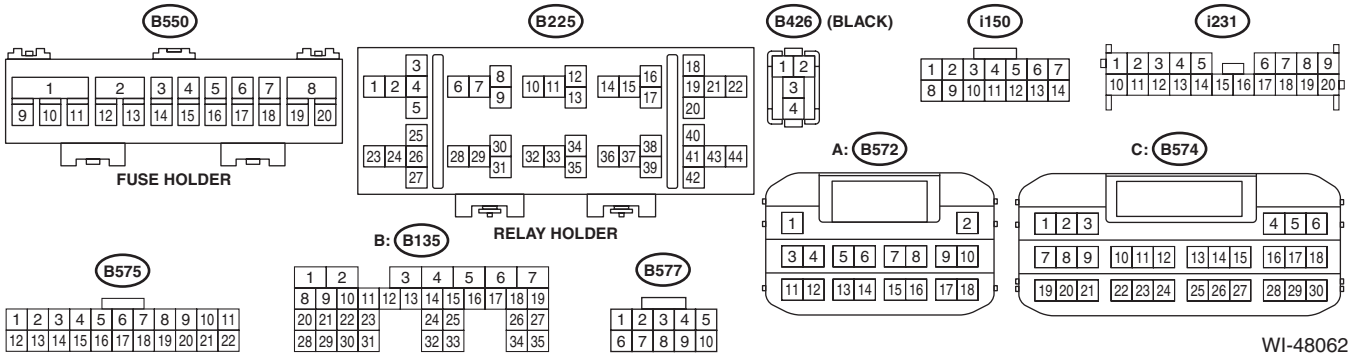
B550
FUSE HOLDER
B225
RELAY HOLDER
B426 (BLACK)
i150
i231
A: B572
C: B574
B: B135
B575
B577

WI-48062

Power Supply Circuit

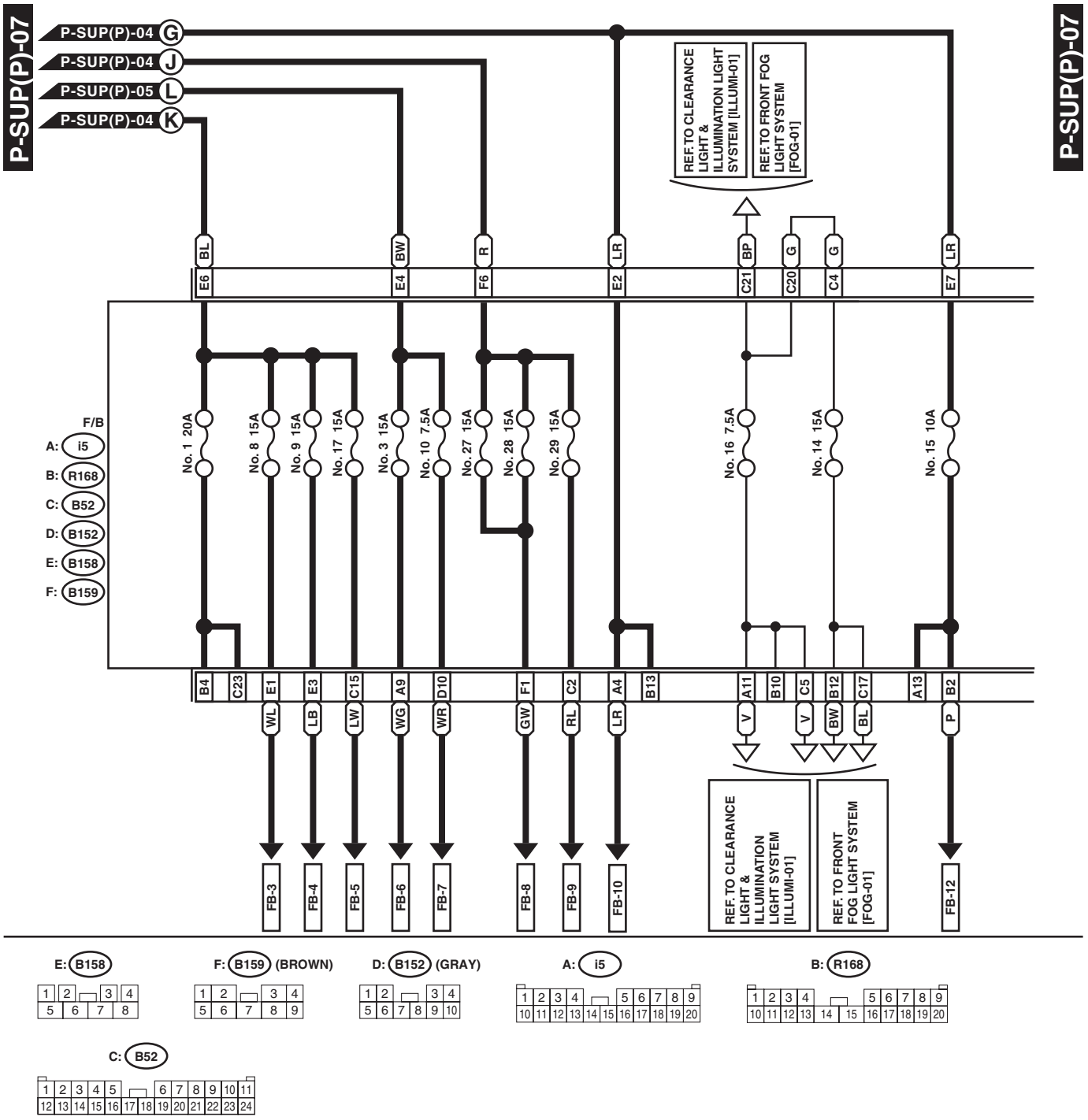

WI-48063

Power Supply Circuit

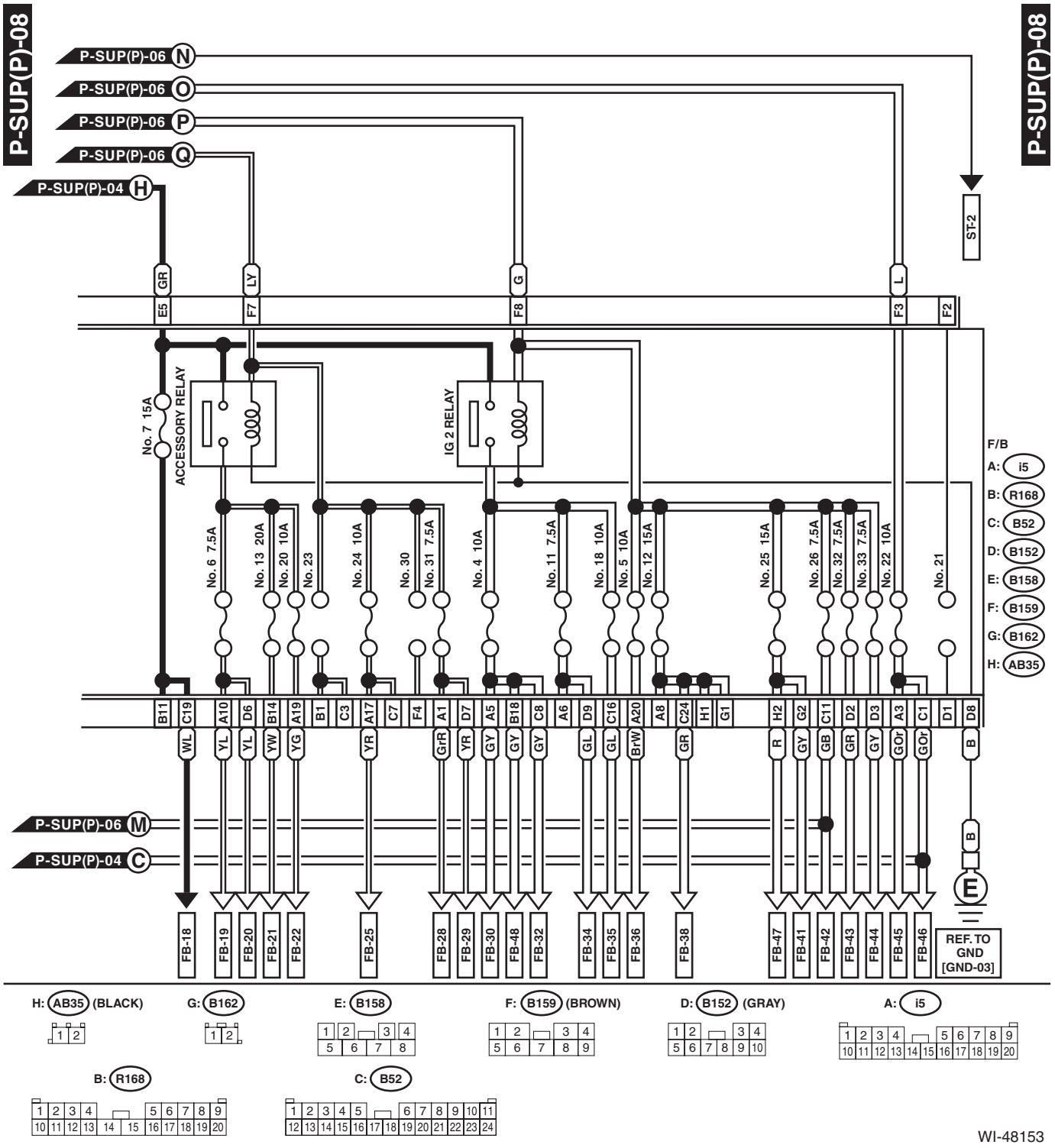

No.	Load
MB-1	VDC CM
MB-2	VDC CM
MB-3	Wiper relay
	Brake vacuum pump relay
MB-4	Sub fan relay
MB-5	Mirror heater LH
	Mirror heater RH
	Rear defogger
MB-6	Body integrated unit
MB-7	Main fan relay 2
MB-8	Main fan motor
MB-9	ECM
MB-10	Main fan relay 2
MB-11	Main fan relay 2
MB-12	Body integrated unit
MB-13	Body integrated unit
MB-16	Front combination light LH
	Front combination light RH
MB-17	Daytime running light relay
MB-18	Body integrated unit
MB-19	Horn
MB-20	Horn
MB-21	Horn switch
	Body integrated unit
MB-22	A/F, oxygen sensor relay
MB-23	Main relay
	IG relay
MB-24	Electronic throttle control relay
MB-25	Fuel pump relay
MB-26	TCM
	Self shut relay
MB-27	ECM
	Data link connector
MB-28	Turn signal and hazard unit
	Body integrated unit
MB-29	Spot map light
	Room light
	Body integrated unit
	Immobilizer antenna
MB-30	Power window circuit breaker
MB-31	IG relay 1 (push button start)
	IG relay 2 (push button start)
	Accessory relay (push button start)
MB-32	Tail relay
	Daytime running light relay

No.	Load
MB-33	DMCM relay
	High voltage battery cooling fan / drive motor inverter relay
	High voltage battery
	HPCM
	ISG
MB-35	ID code box
	Keyless access CM
MB-36	HPCM
MB-37	Brake vacuum pump relay
ST-2	Starter relay 1
FB-3	Stop light and brake switch
FB-4	Wiper deicer relay
FB-5	Seat heater relay
FB-6	Body integrated unit
FB-7	Remote engine start CM
FB-8	Blower motor relay
FB-9	Front fog light relay
FB-10	Audio
	MFD
	Navigation unit
FB-12	Keyless entry CM
	Luggage room light
FB-18	Combination meter
	Body integrated unit
	Impact sensor
	Air mix door actuator LH (with left/right independent air conditioner)
	Air mix door actuator RH (with left/right independent air conditioner)
	Mode door actuator
	Air mix door actuator (without left/right independent air conditioner)
	Steering lock CM
	A/C control panel
	Active grille shutter
FB-19	Remote control mirror switch
FB-20	Seat heater relay
	Rear view mirror
FB-21	Rear accessory power supply socket
FB-22	Front accessory power supply socket
FB-25	AUX input terminal
	Audio
	Navigation unit
FB-28	A/C control panel
FB-29	Body integrated unit
FB-30	Pedestrian alert CM

No.	Load
FB-32	Remote engine start CM
	Impact sensor
	Data link connector
	Stop light and brake switch
	Wiper deicer relay
	Sunroof motor assembly
	Sunroof switch
	Sunroof switch (tilt)
FB-34	Turn signal and hazard unit
FB-35	Back-up light relay
	Auto headlight beam leveler CM
FB-36	Combination meter
	MFD
	HPCM
FB-38	HPCM
	DMCM
	High voltage battery
	Electric oil pump inverter
	Keyless access CM
	ECM
	TCM
	Body integrated unit
	Fuel pump relay
FB-41	Airbag CM
FB-42	Power window relay
	Wiper relay
FB-43	Steering lock CM
FB-44	VDC CM
	Steering angle sensor
	Power steering CM
FB-45	A/C control panel
FB-46	A/C relay
	Sub fan relay
	Pressure switch
	Blower motor relay
FB-47	Occupant detection control module
FB-48	TPMS CM
BAT-1	12V engine restart battery sensor
BAT-2	Power steering CM
BAT-3	DC/DC converter

4. Ground Circuit

A: WIRING DIAGRAM

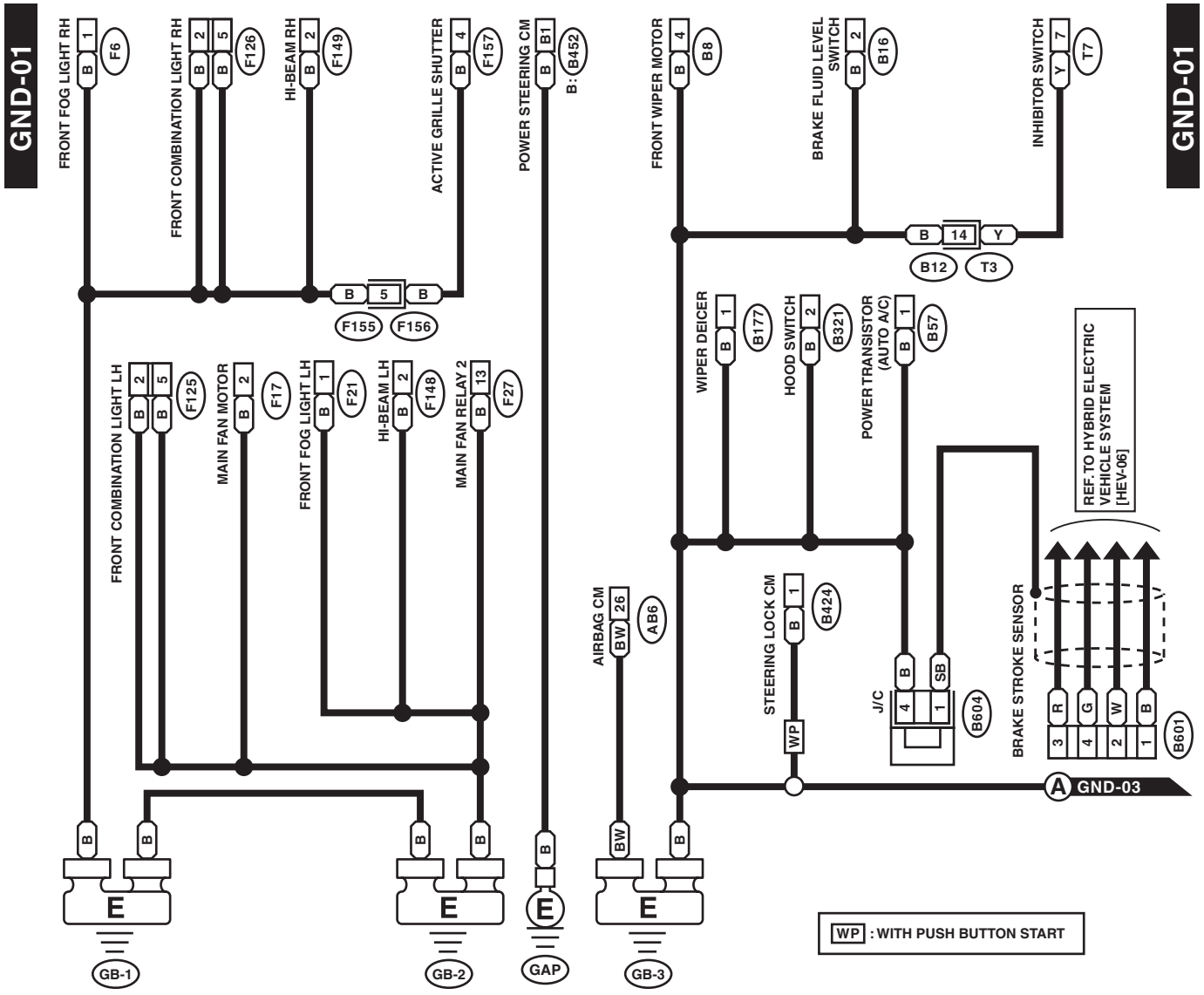

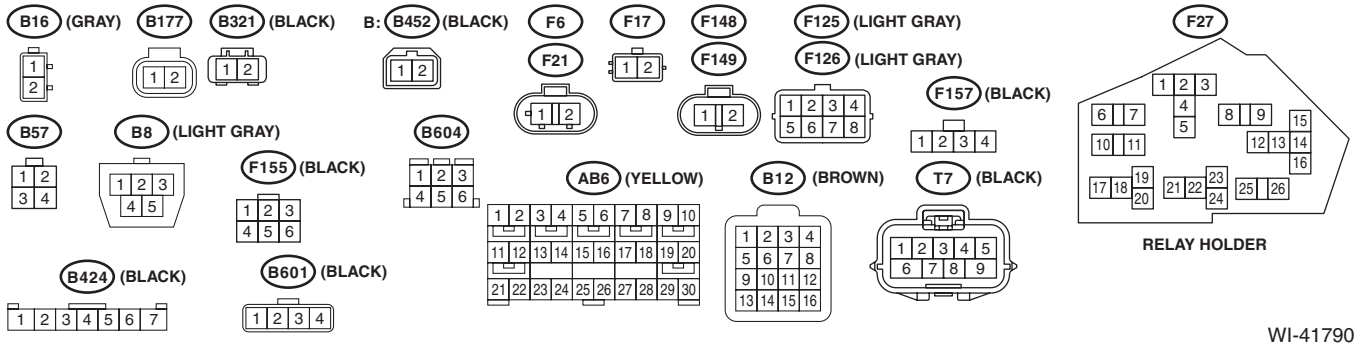

WI-41790

Ground Circuit

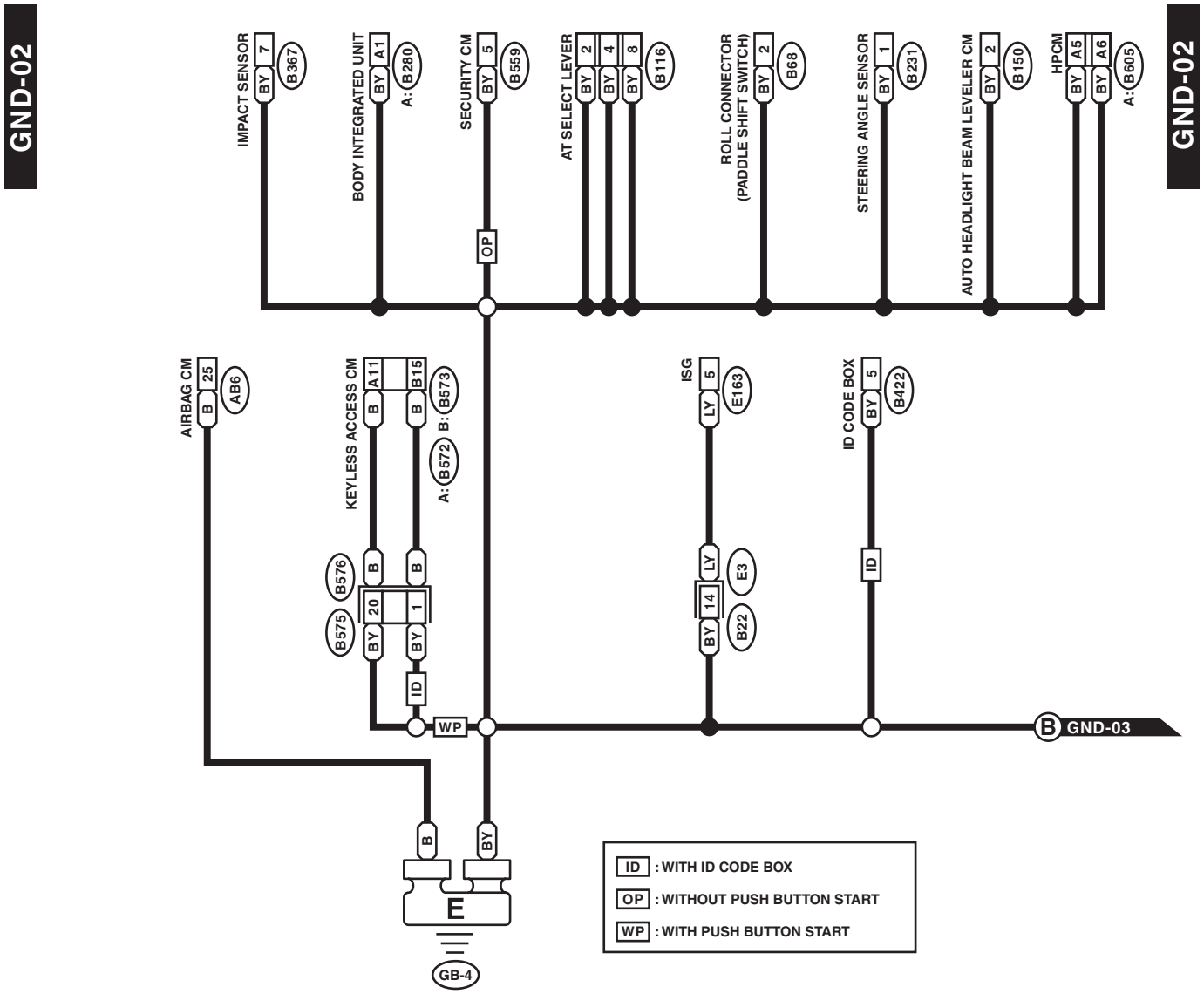

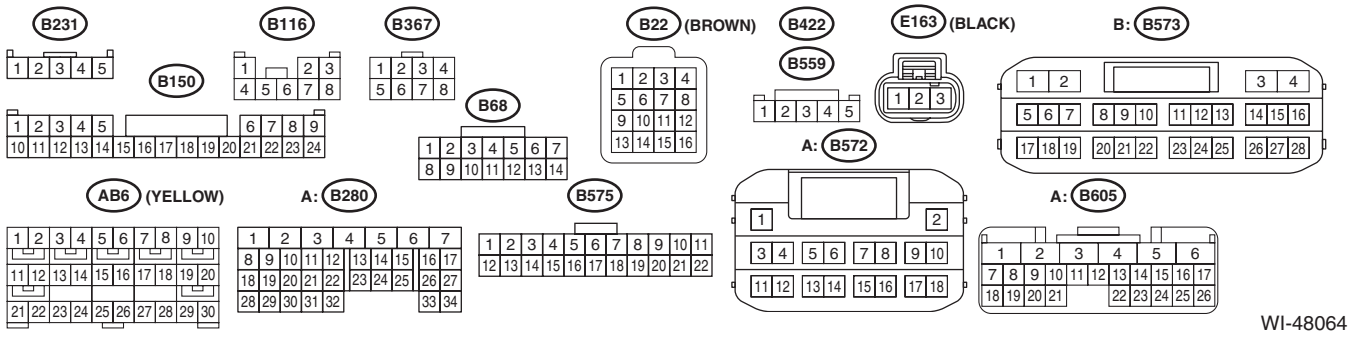

WI-48064

Ground Circuit

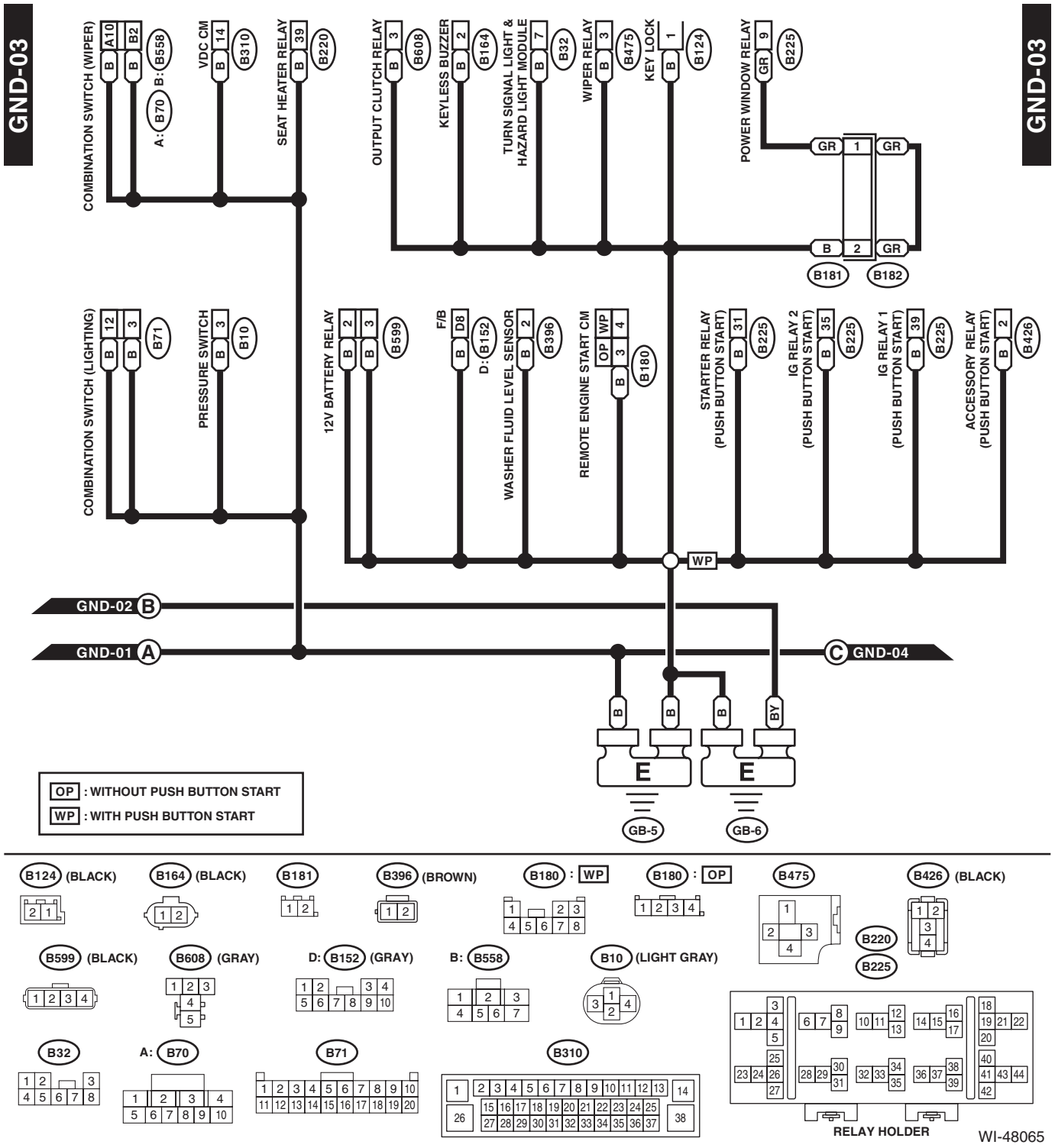

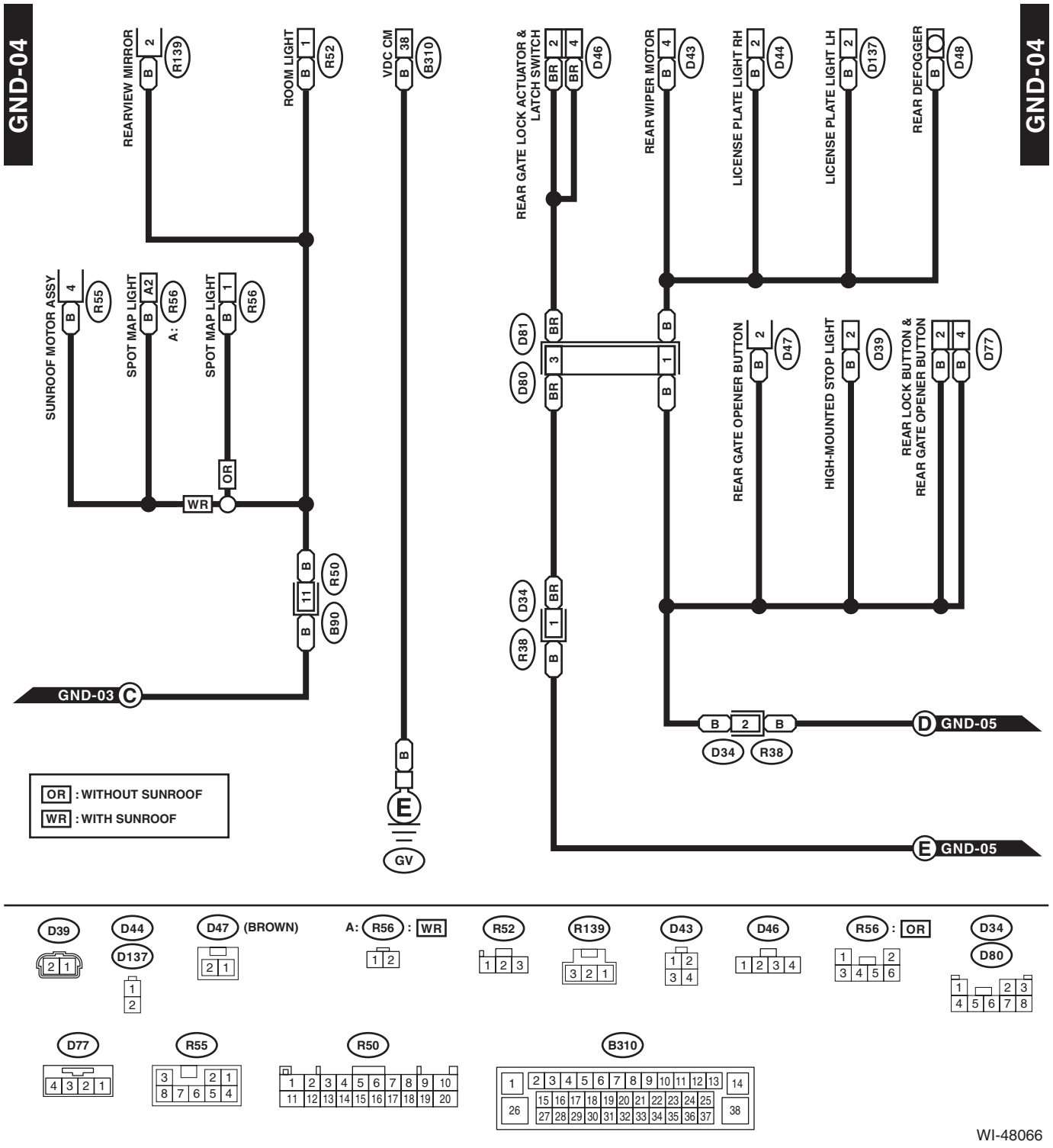
GND-04
GND-04
REARVIEW MIRROR
ROOM LIGHT
VDC CM
REAR GATE LOCK ACTUATOR & LATCH SWITCH
REAR WIPER MOTOR
LICENSE PLATE LIGHT RH
LICENSE PLATE LIGHT LH
REAR DEFOGGER
SUNROOF MOTOR ASSY
SPOT MAP LIGHT
SPOT MAP LIGHT
A:
REAR GATE OPENER BUTTON
HIGH-MOUNTED STOP LIGHT
REAR LOCK BUTTON & REAR GATE OPENER BUTTON
OR
WR
GND-03
GND-05
GND-05
OR : WITHOUT SUNROOF
WR : WITH SUNROOF
GV

D39
D44
D137
D47 (BROWN)
A: R56 : WR
R52
R139
D43
D46
R56 : OR
D34
D80
D77
R55
R50
B310

WI-48066

Ground Circuit

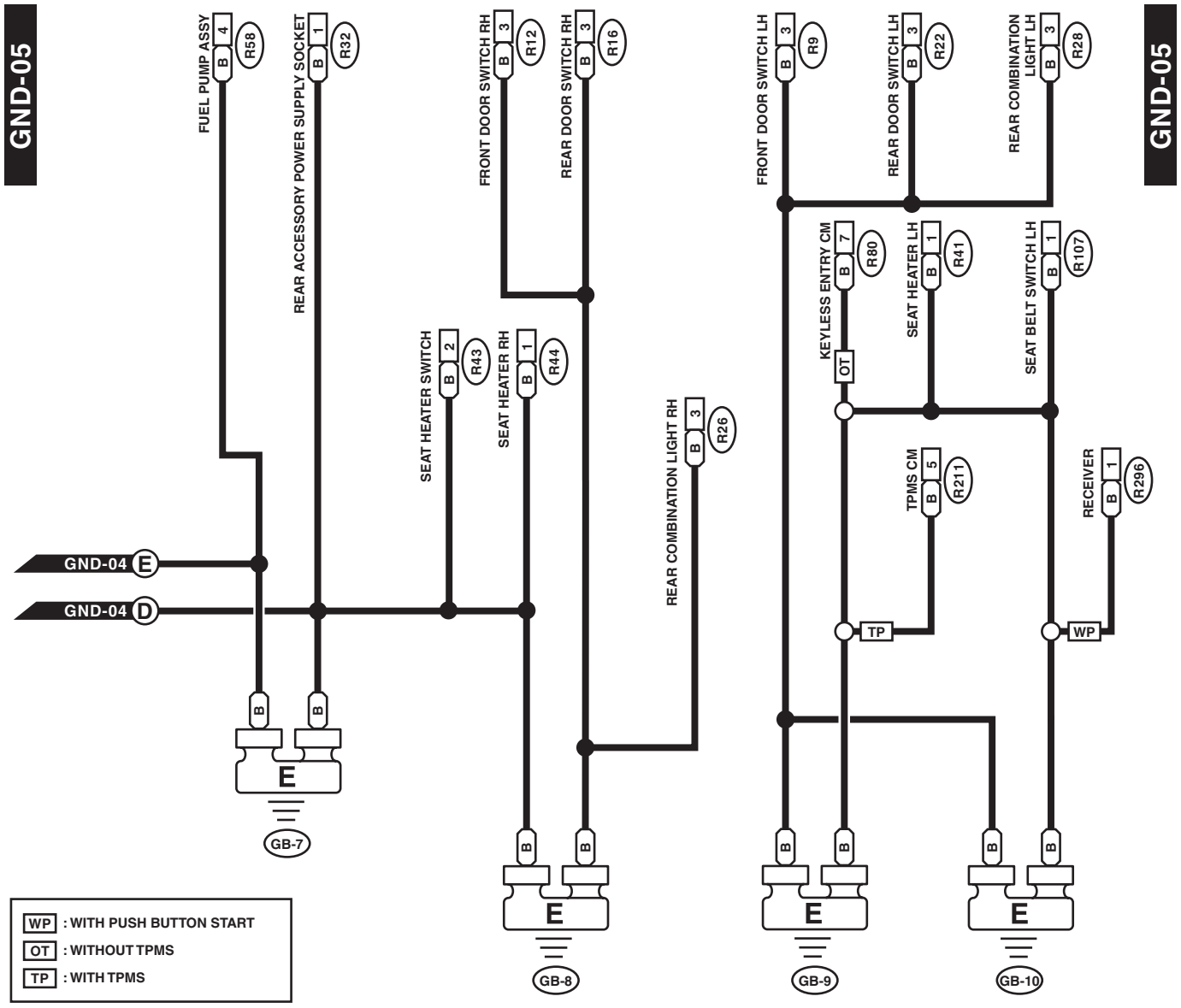

WI-48067

Ground Circuit

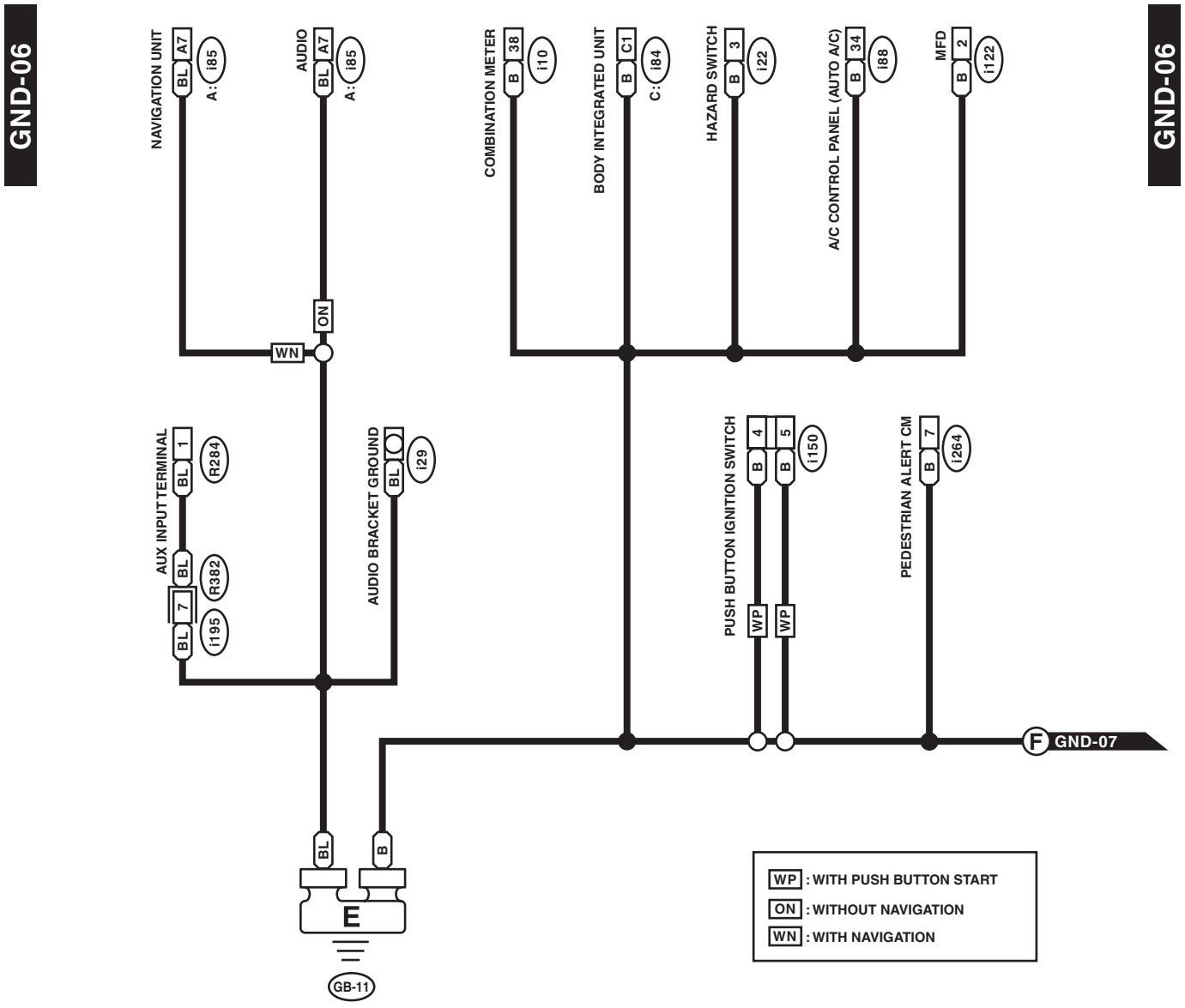

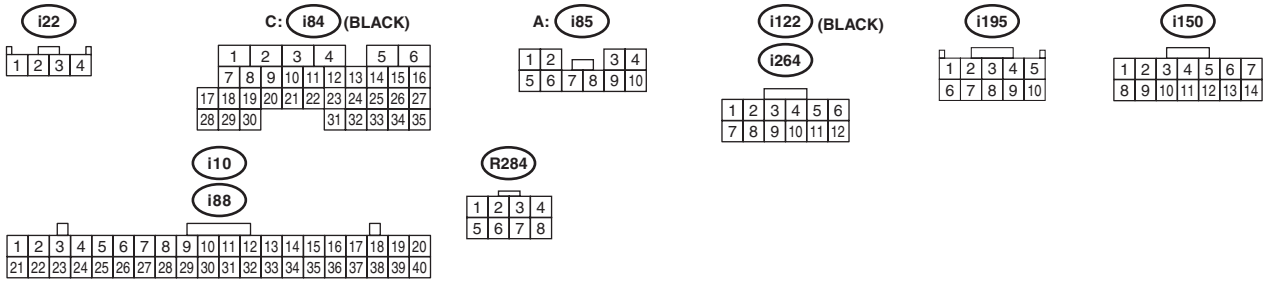

WI-48068

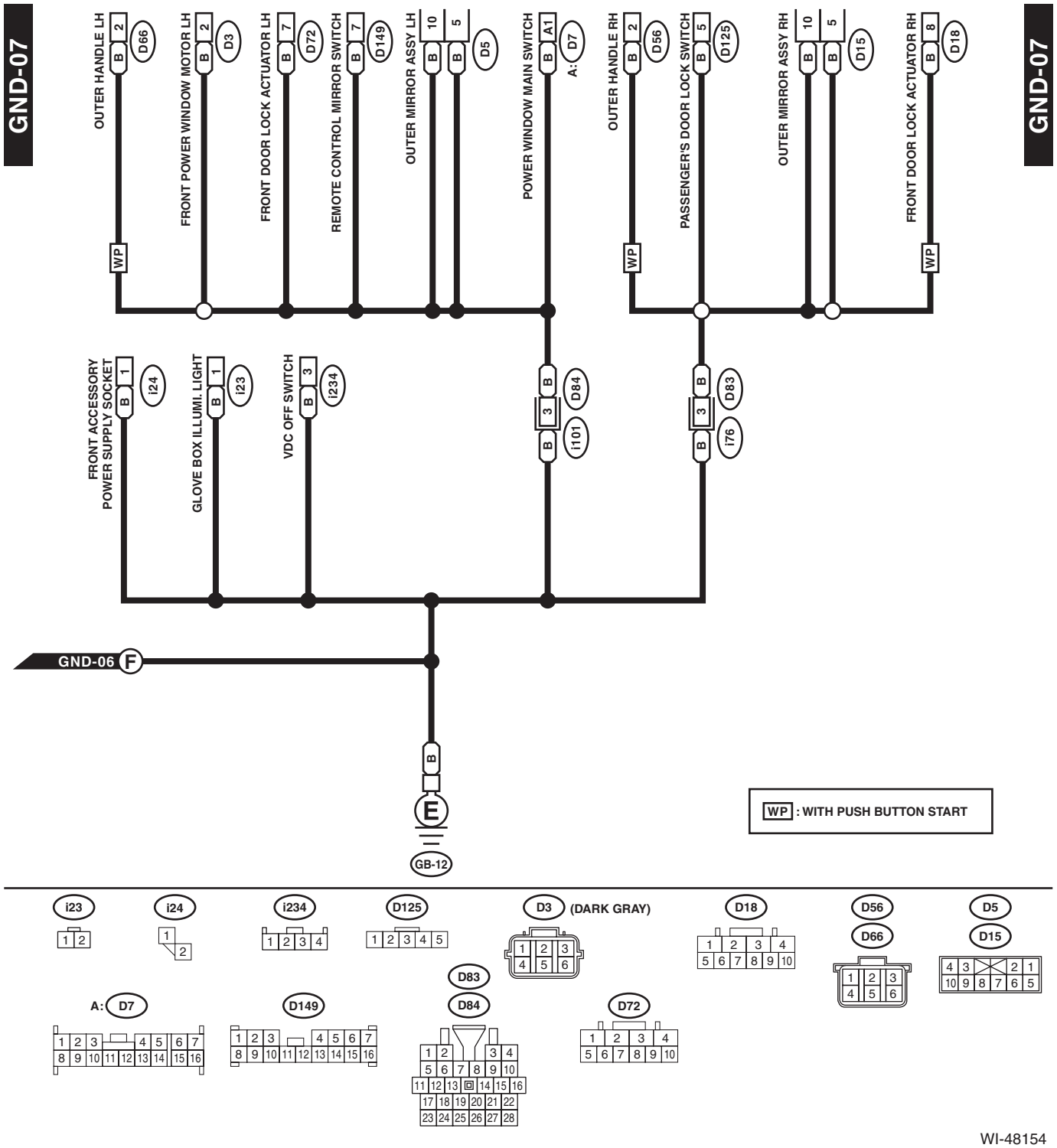
GND-07
GND-07
OUTER HANDLE LH
FRONT POWER WINDOW MOTOR LH
FRONT DOOR LOCK ACTUATOR LH
REMOTE CONTROL MIRROR SWITCH
OUTER MIRROR ASSY LH
POWER WINDOW MAIN SWITCH
OUTER HANDLE RH
PASSENGER'S DOOR LOCK SWITCH
OUTER MIRROR ASSY RH
FRONT DOOR LOCK ACTUATOR RH
FRONT ACCESSORY POWER SUPPLY SOCKET
GLOVE BOX ILLUMI. LIGHT
VDC OFF SWITCH
GND-06 F
E
GB-12
WP : WITH PUSH BUTTON START
i23
i24
i234
D125
D3 (DARK GRAY)
D18
D56
D66
D5
D15
A: D7
D149
D83
D84
D72

WI-48154

GND-08

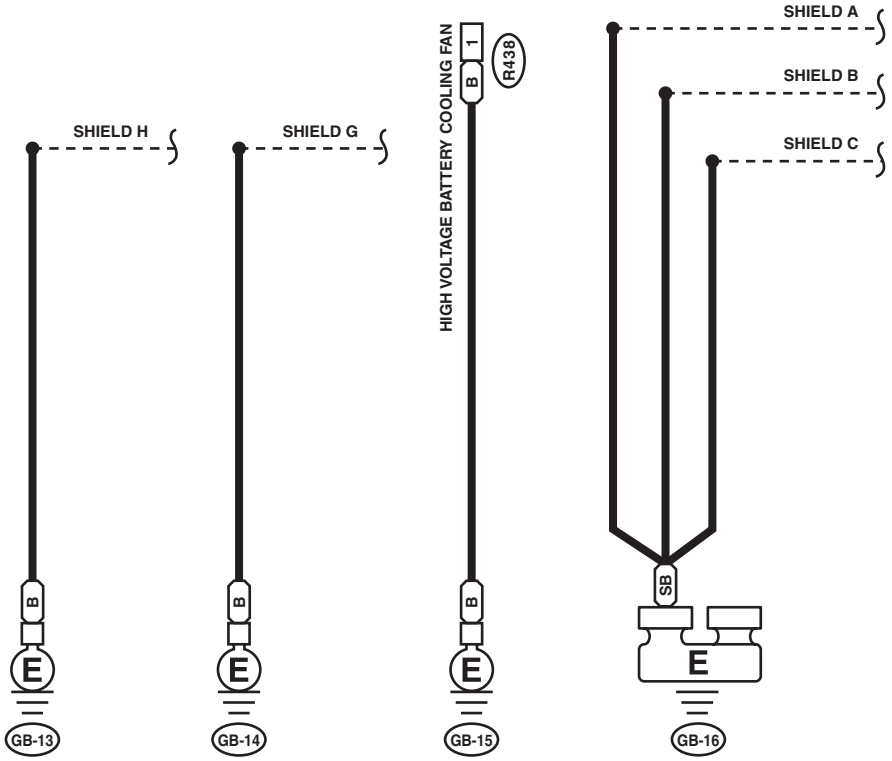

WI-41797

GND-09

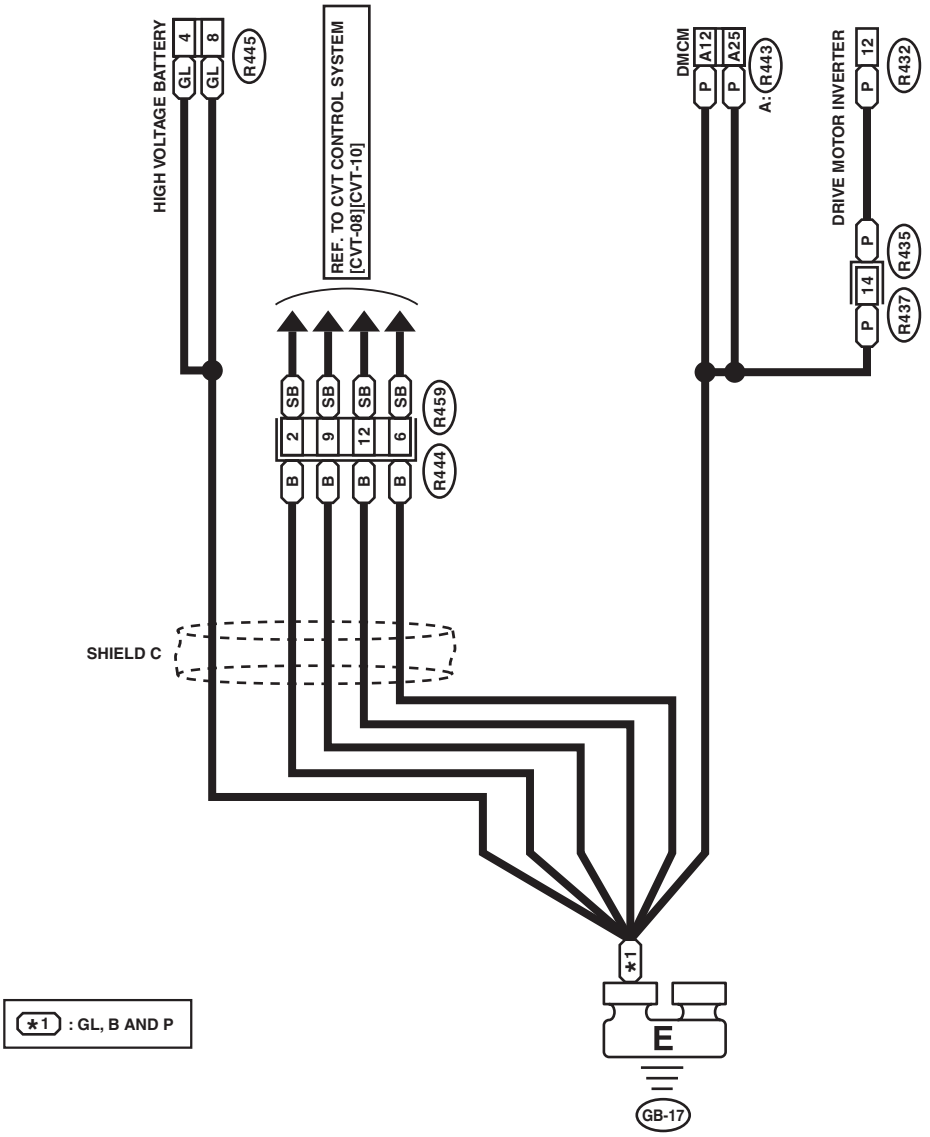

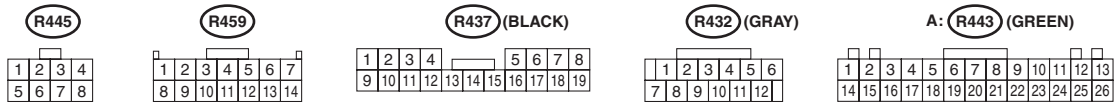

WI-41798

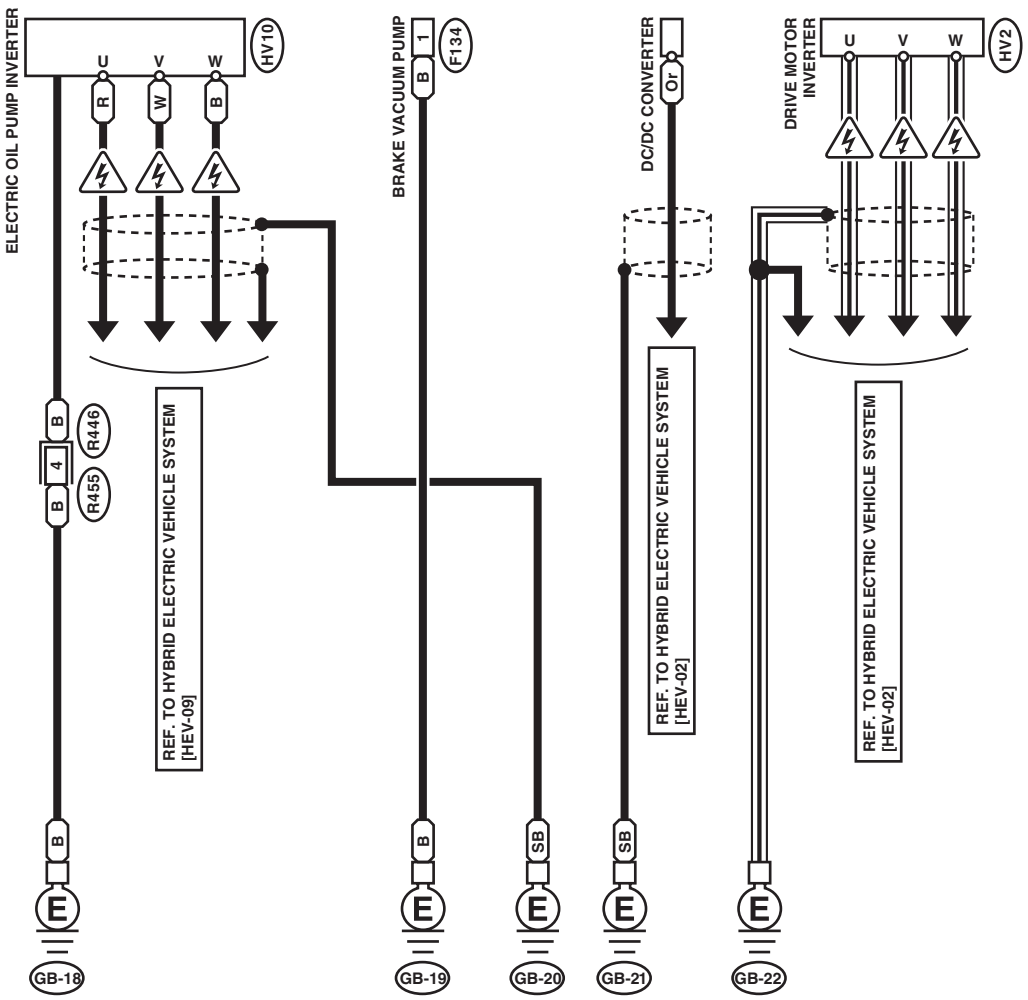

F134 (DARK GRAY)

R455

WI-48724

5. Active Grille Shutter

A: WIRING DIAGRAM

ACTGS-01

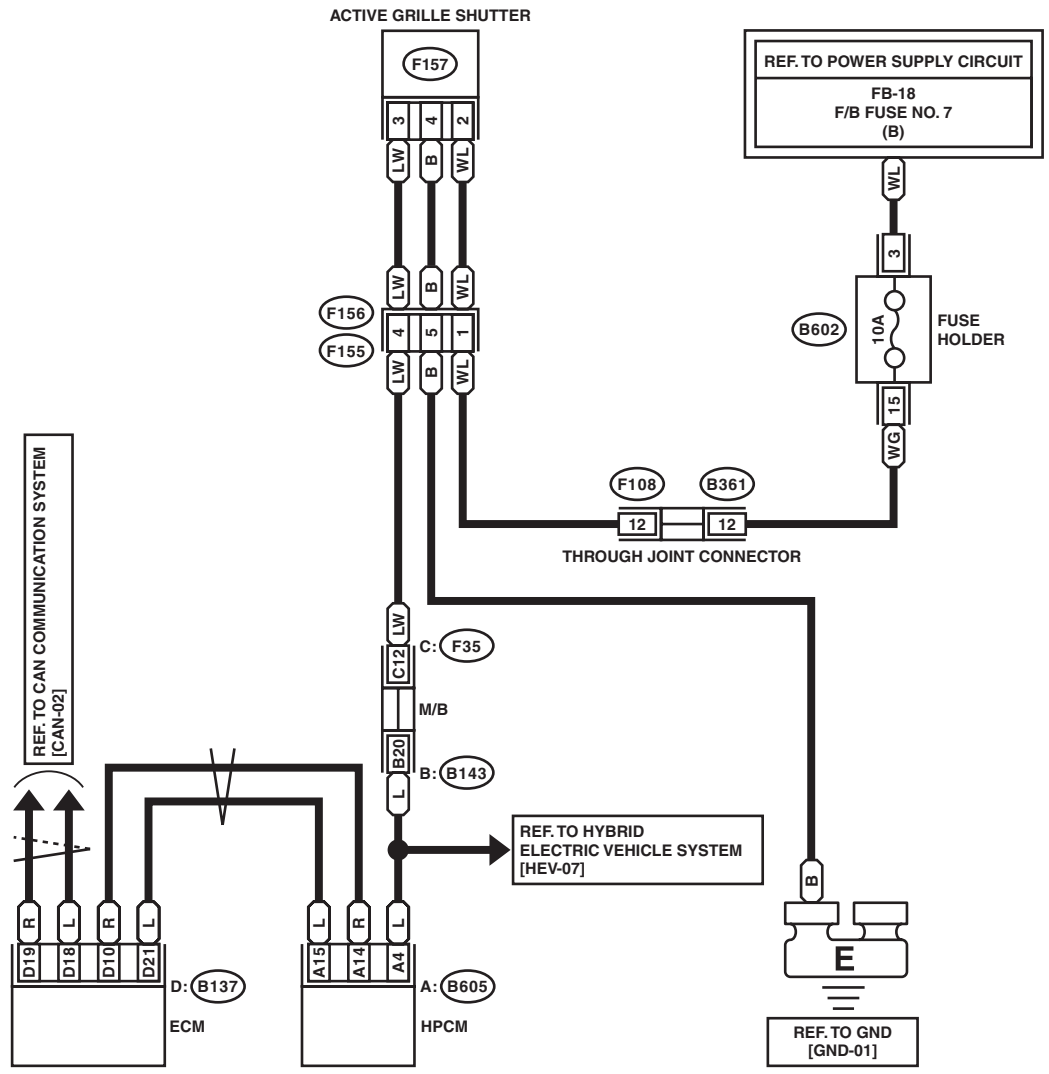

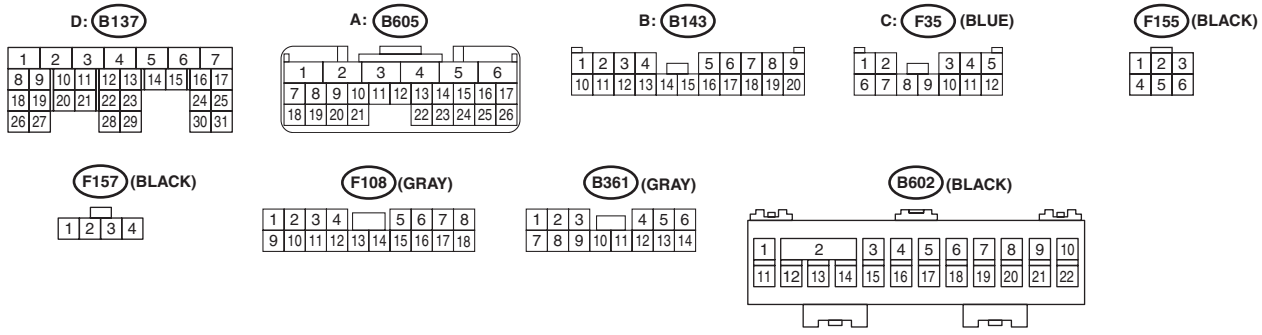

WI-48155

6. Airbag System

A: WIRING DIAGRAM

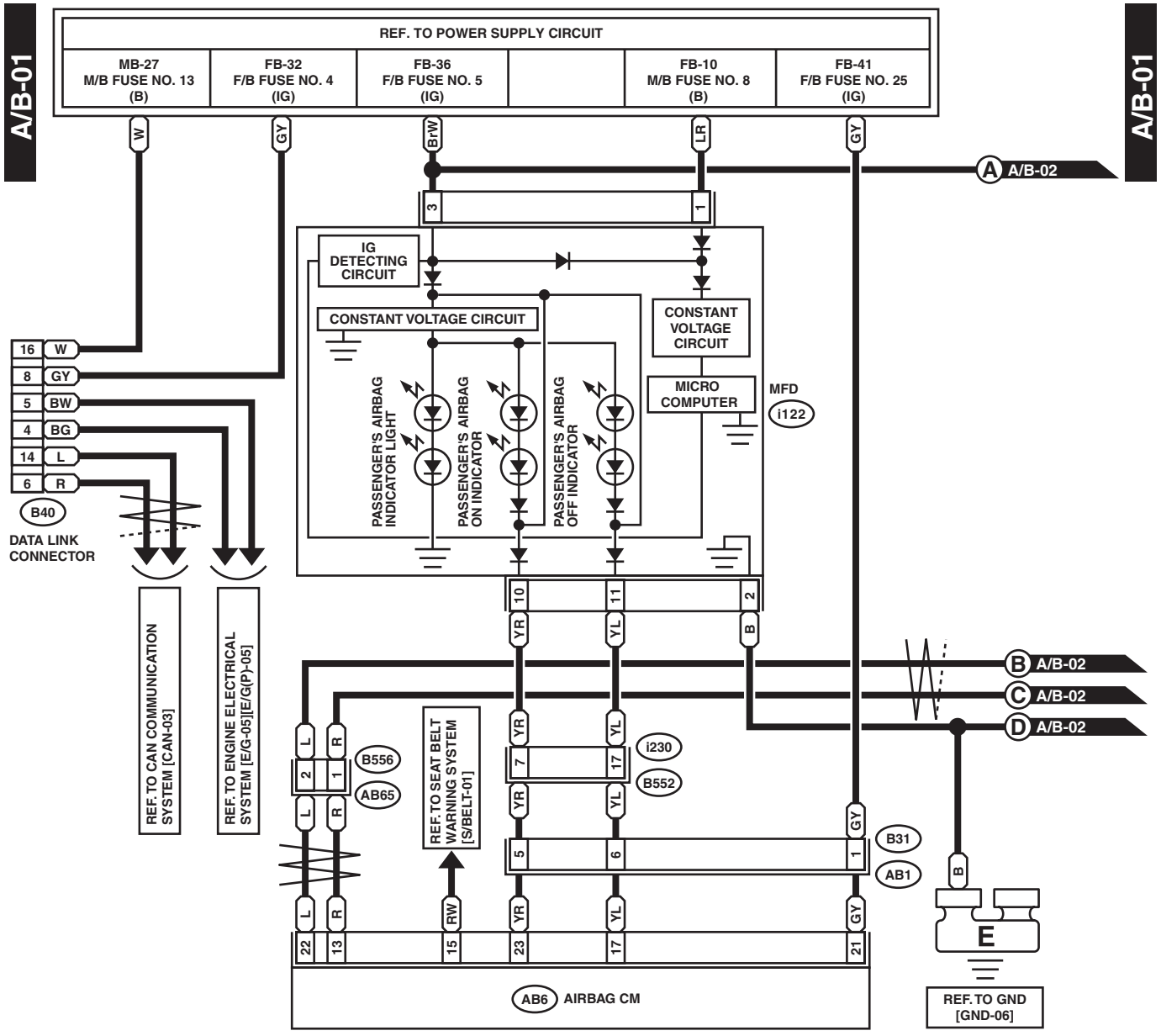

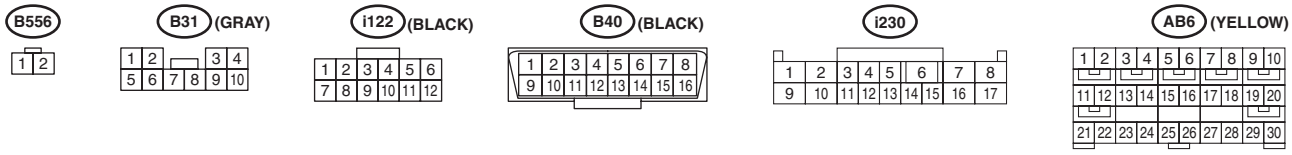

WI-48069

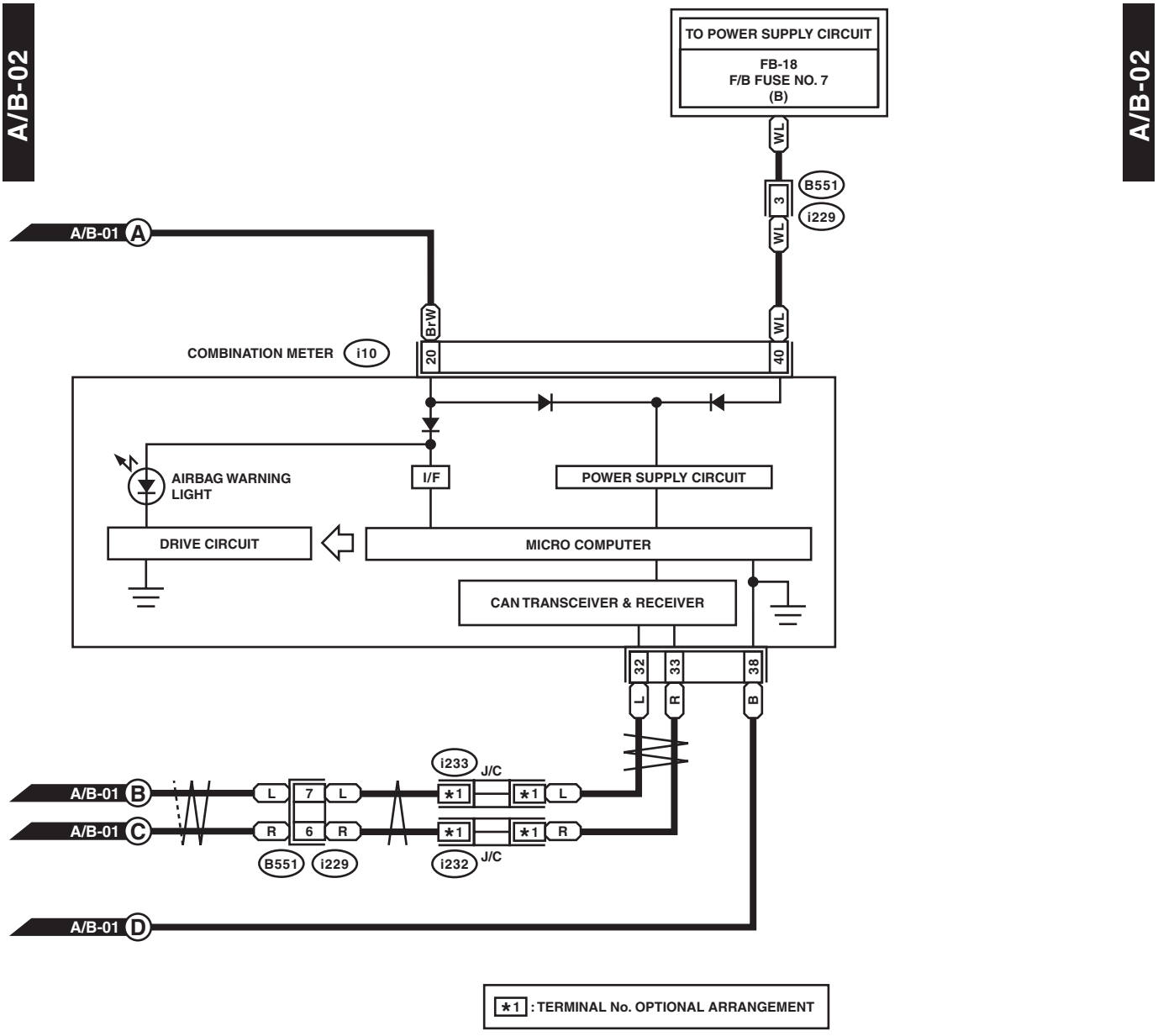
A/B-02
A/B-02
TO POWER SUPPLY CIRCUIT
FB-18
F/B FUSE NO. 7
(B)
WL
B551
3
i229
WL
A/B-01 A
BrW
WL
COMBINATION METER i10
20
40
AIRBAG WARNING LIGHT
I/F
POWER SUPPLY CIRCUIT
DRIVE CIRCUIT
MICRO COMPUTER
CAN TRANSCEIVER & RECEIVER
32
33
38
L
R
B
i233 J/C
A/B-01 B
L
7
L
*1
*1
L
A/B-01 C
R
6
R
*1
*1
R
B551
i229
i232 J/C
A/B-01 D
*1 : TERMINAL No. OPTIONAL ARRANGEMENT

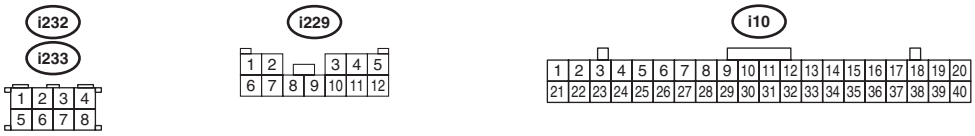
i232
i233
1 2 3 4
5 6 7 8
i229
1 2 3 4 5
6 7 8 9 10 11 12
i10
1 2 3 4 5 6 7 8 9 10 11 12 13 14 15 16 17 18 19 20
21 22 23 24 25 26 27 28 29 30 31 32 33 34 35 36 37 38 39 40

WI-41801

A/B-03

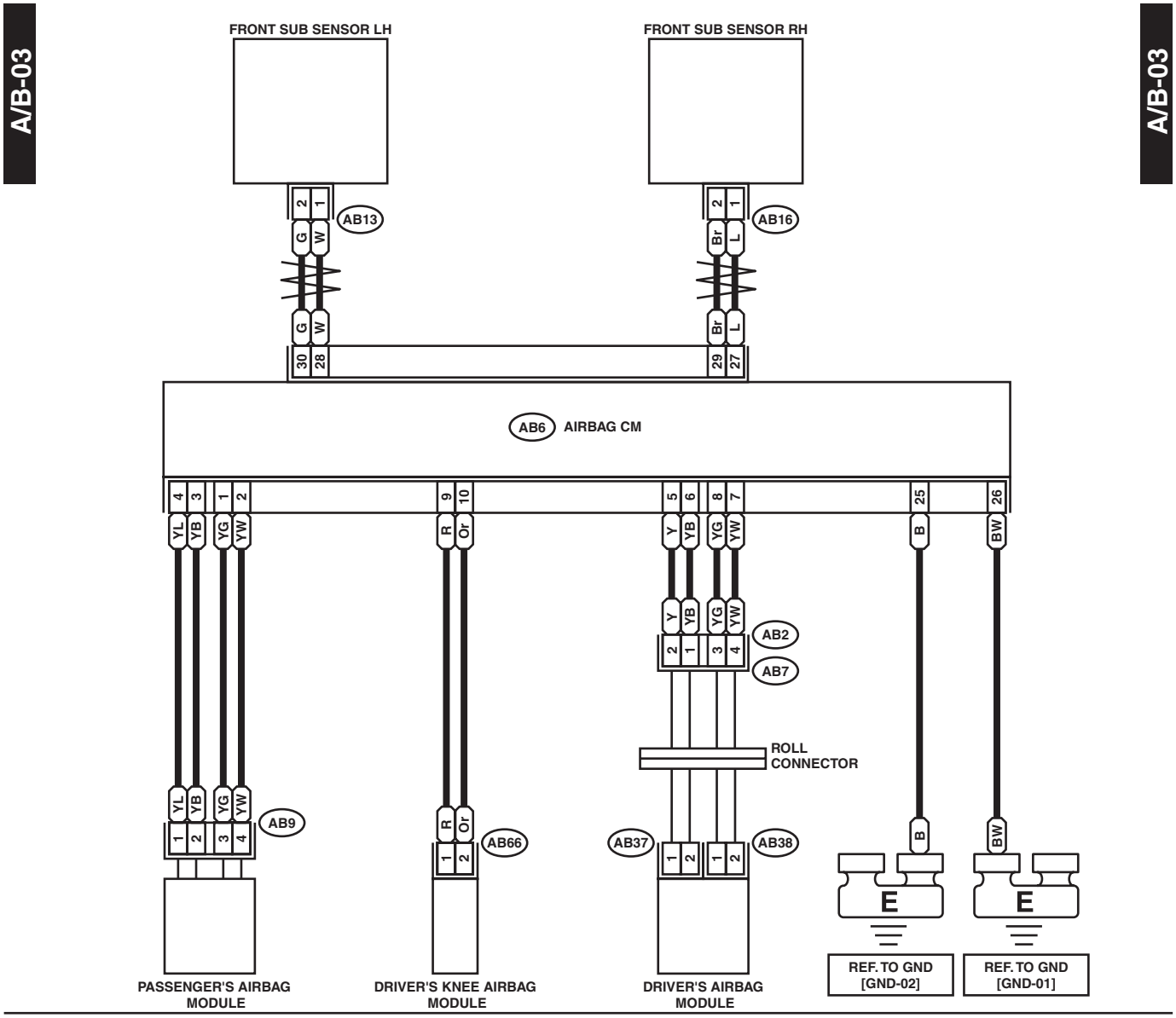

AB13 (YELLOW)
AB16 (YELLOW)

AB37 (ORANGE)

AB38 (BLACK)
AB66 (BLACK)

AB2 (YELLOW)

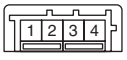

AB9 (YELLOW)

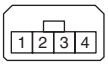

AB6 (YELLOW)

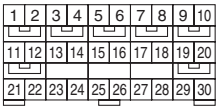

WI-48156

A/B-04

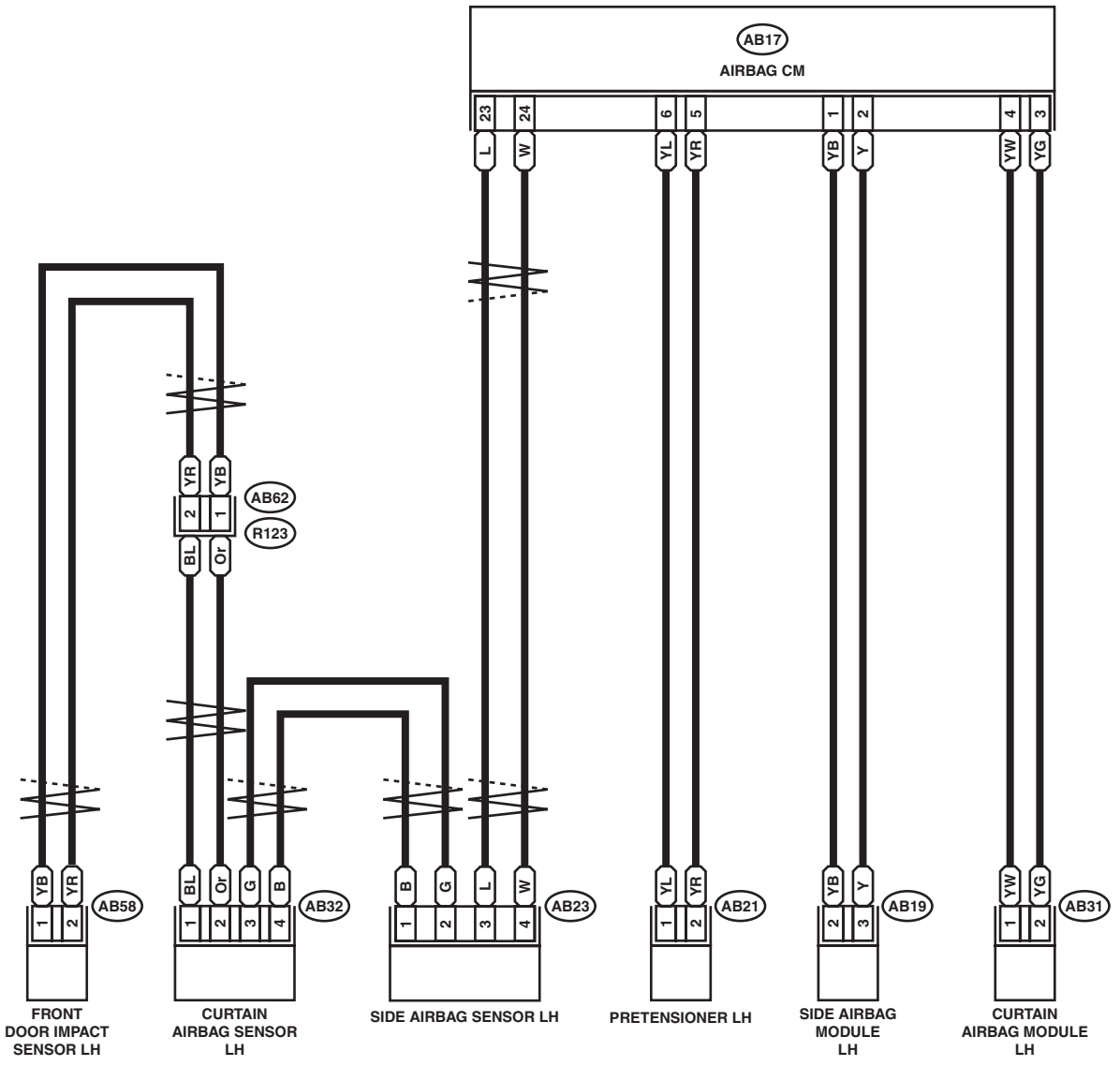

A/B-04

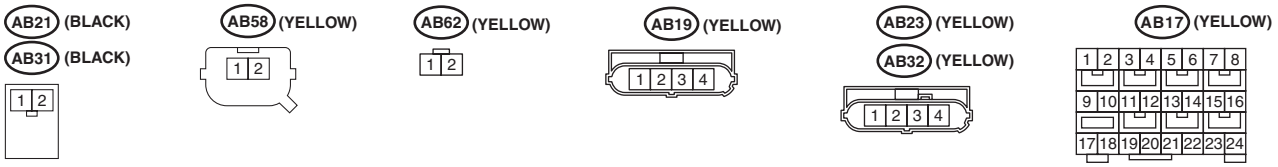

WI-41802

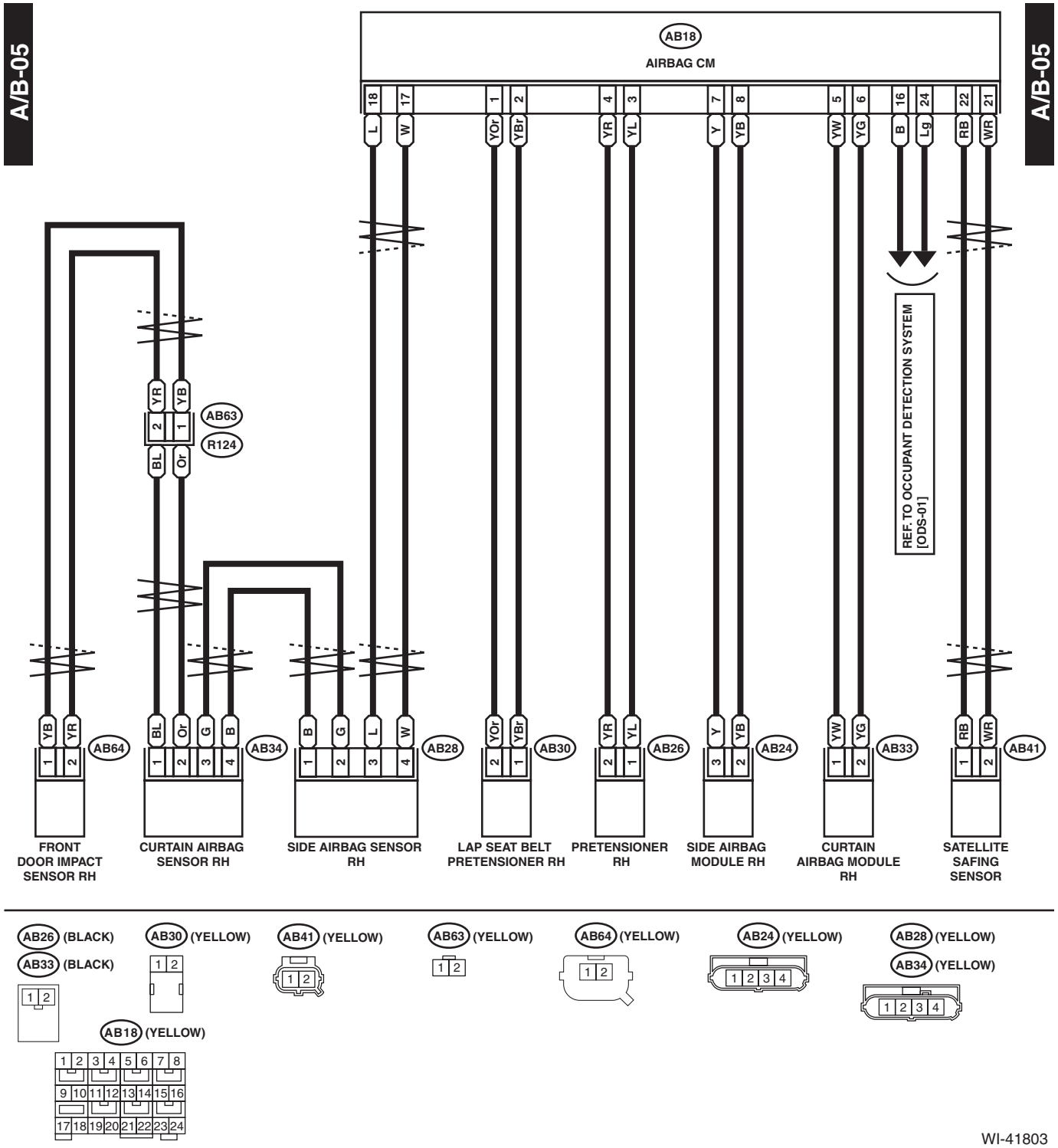
A/B-05
A/B-05
AB18
AIRBAG CM
18 17 1 2 4 3 7 8 5 6 16 24 22 21
L W YOr YBr YR YL Y YB YW YG B Lg RB WR
REF. TO OCCUPANT DETECTION SYSTEM [ODS-01]
YR YB
AB63
R124
2 1
BL Or
YB YR
AB64
1 2
BL Or G B
AB34
1 2 3 4
B G L W
AB28
1 2 3 4
YOr YBr
AB30
2 1
YR YL
AB26
2 1
Y YB
AB24
3 2
YW YG
AB33
1 2
RB WR
AB41
1 2
FRONT DOOR IMPACT SENSOR RH
CURTAIN AIRBAG SENSOR RH
SIDE AIRBAG SENSOR RH
LAP SEAT BELT PRETENSIONER RH
PRETENSIONER RH
SIDE AIRBAG MODULE RH
CURTAIN AIRBAG MODULE RH
SATELLITE SAFING SENSOR
AB26 (BLACK)
AB33 (BLACK)
1 2
AB30 (YELLOW)
1 2
AB41 (YELLOW)
1 2
AB63 (YELLOW)
1 2
AB64 (YELLOW)
1 2
AB24 (YELLOW)
1 2 3 4
AB28 (YELLOW)
AB34 (YELLOW)
1 2 3 4
AB18 (YELLOW)
1 2 3 4 5 6 7 8
9 10 11 12 13 14 15 16
17 18 19 20 21 22 23 24

WI-41803

7. Air Conditioning System

A: WIRING DIAGRAM

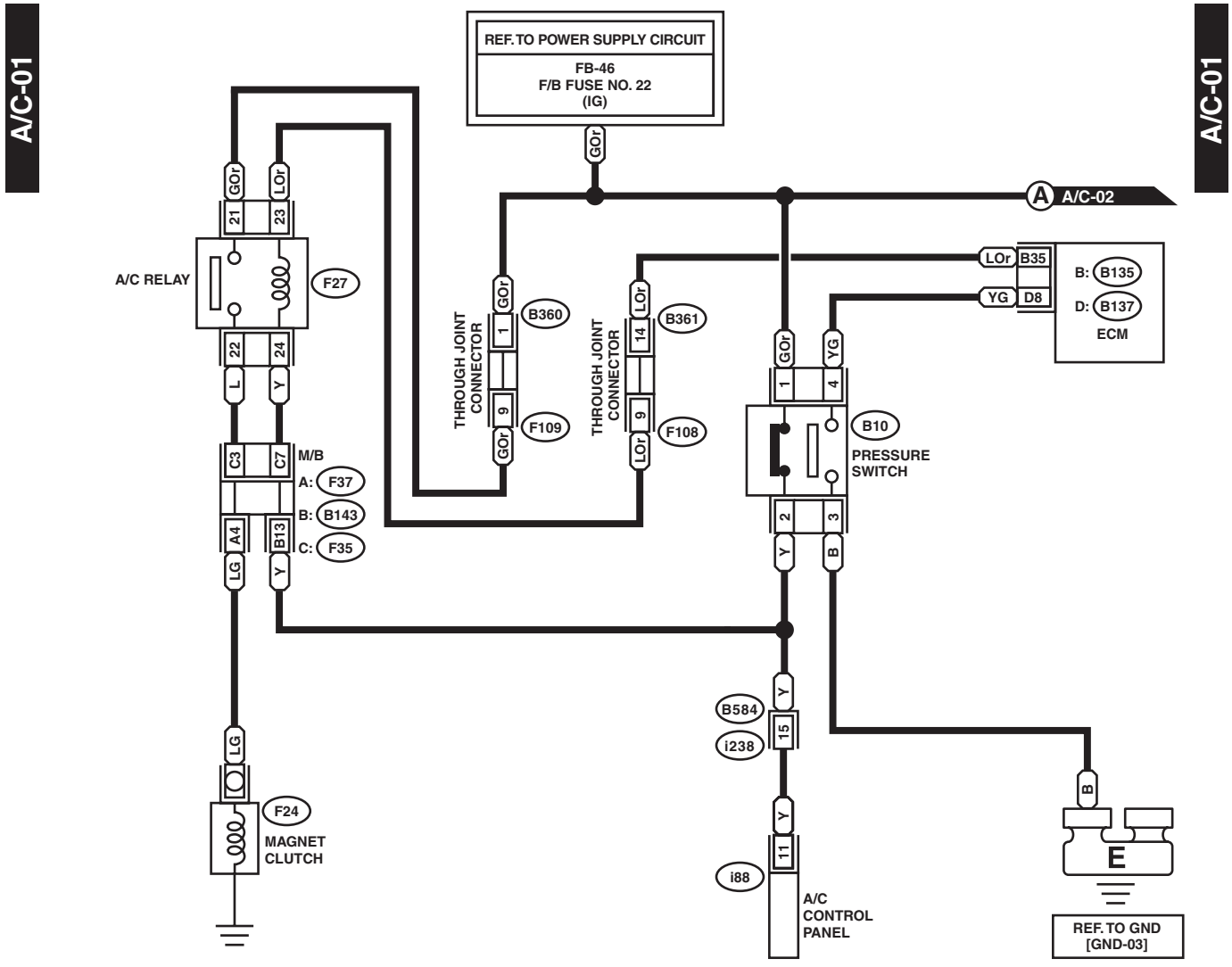

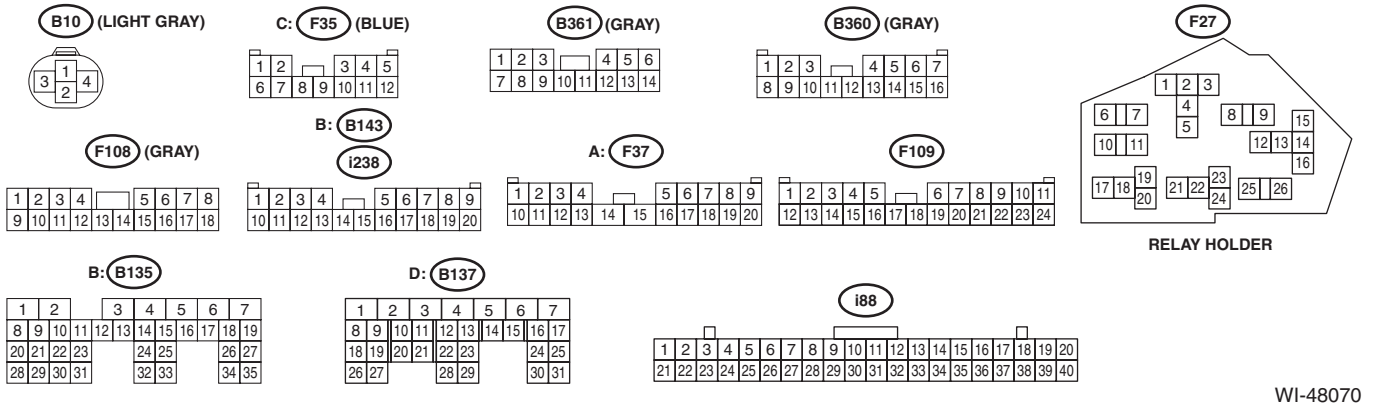

WI-48070

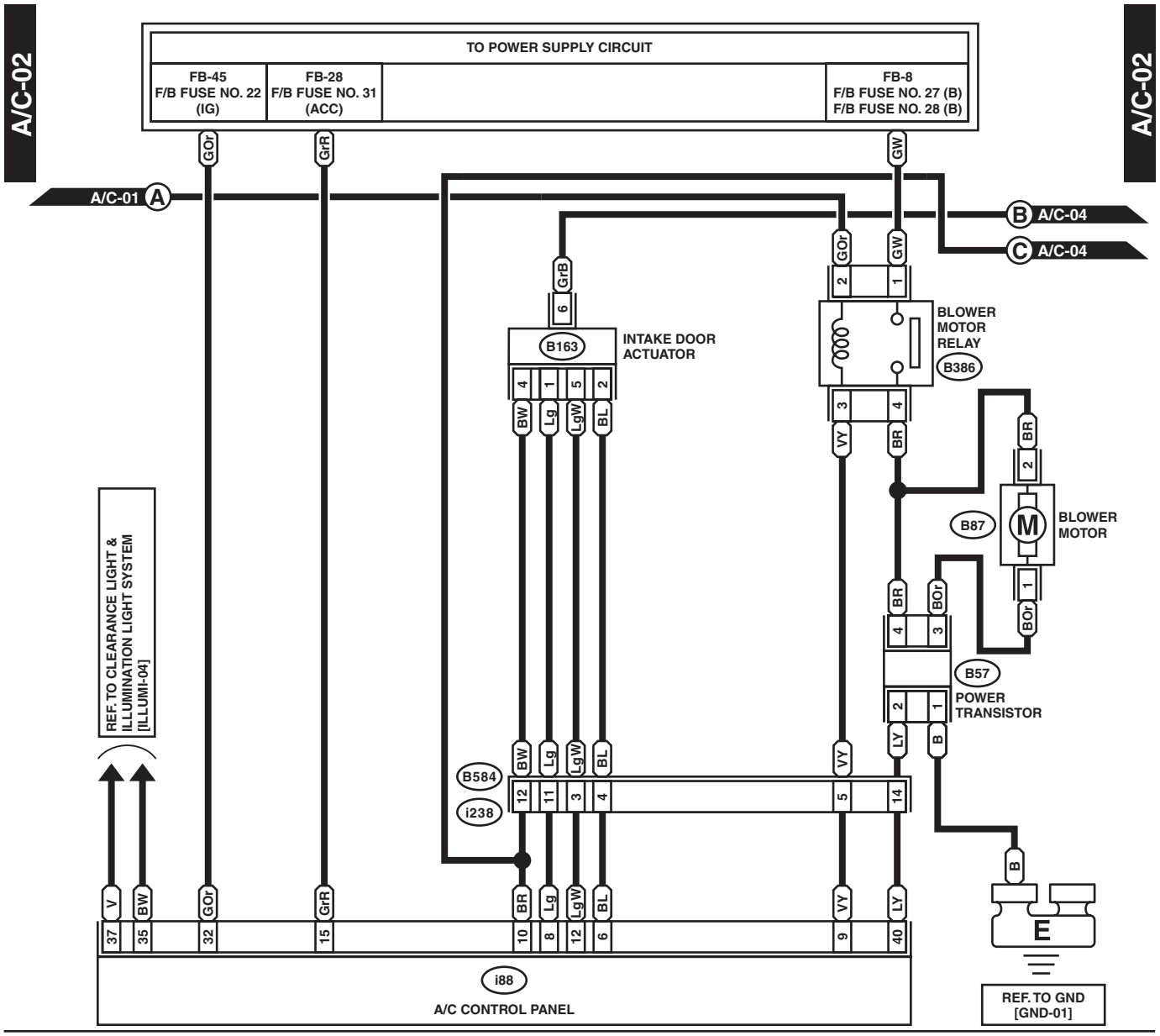
A/C-02
A/C-02
TO POWER SUPPLY CIRCUIT
FB-45
F/B FUSE NO. 22
(IG)
FB-28
F/B FUSE NO. 31
(ACC)
FB-8
F/B FUSE NO. 27 (B)
F/B FUSE NO. 28 (B)
A/C-01 A
B A/C-04
C A/C-04
INTAKE DOOR
ACTUATOR
B163
BLOWER
MOTOR
RELAY
B386
BLOWER
MOTOR
B87
M
B57
POWER
TRANSISTOR
B584
i238
i88
A/C CONTROL PANEL
REF. TO CLEARANCE LIGHT &
ILLUMINATION LIGHT SYSTEM
[ILLUMI-04]
REF. TO GND
[GND-01]
E

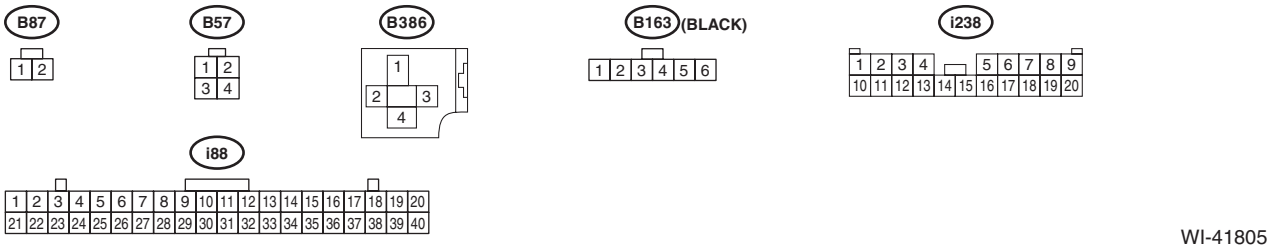
B87
B57
B386
B163 (BLACK)
i238
i88

WI-41805

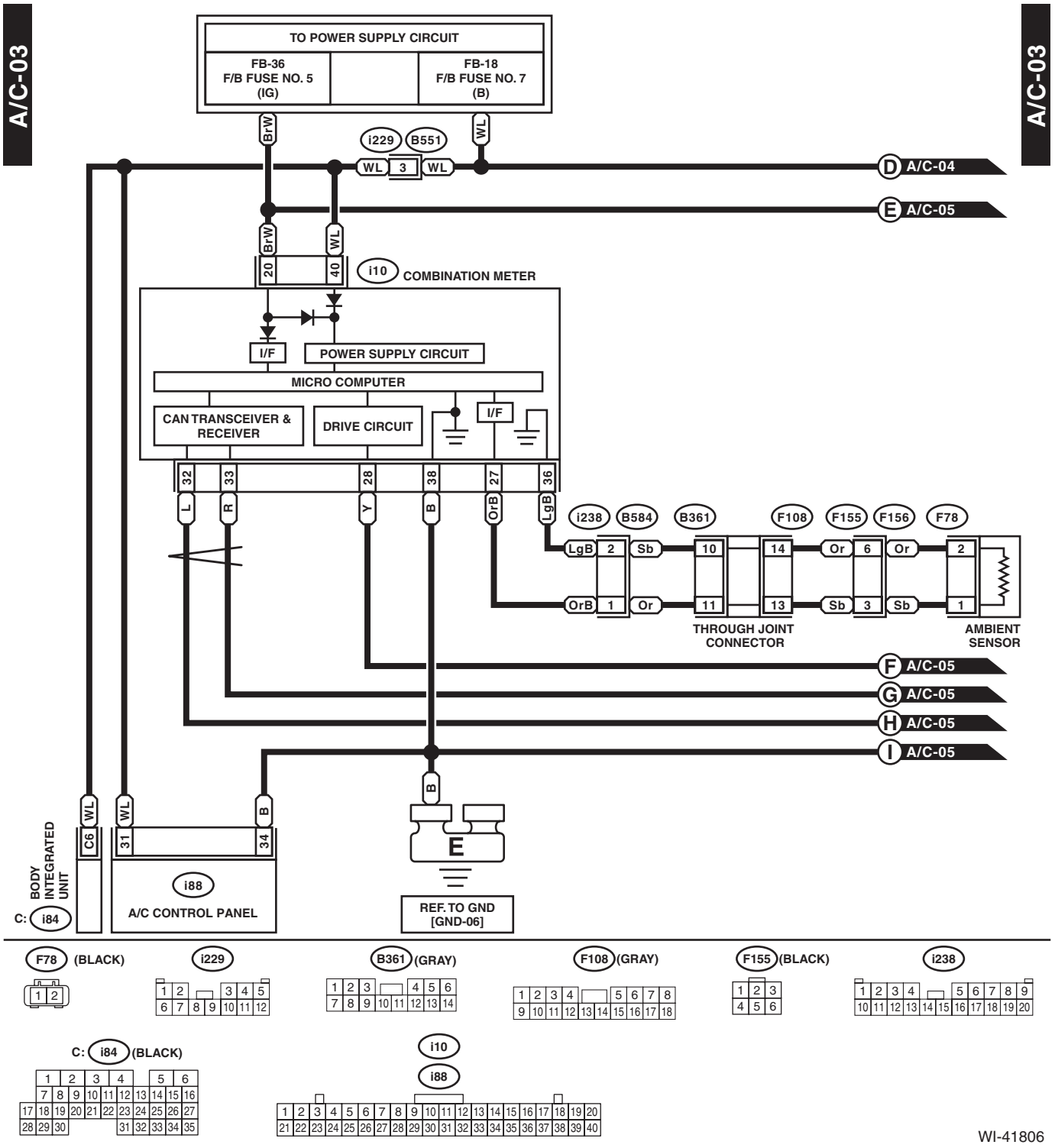
A/C-03
A/C-03
TO POWER SUPPLY CIRCUIT
FB-36
F/B FUSE NO. 5
(IG)
FB-18
F/B FUSE NO. 7
(B)
BrW
WL
i229
B551
WL
3
WL
D A/C-04
E A/C-05
BrW
WL
20
40
i10
COMBINATION METER
I/F
POWER SUPPLY CIRCUIT
MICRO COMPUTER
CAN TRANSCEIVER &
RECEIVER
DRIVE CIRCUIT
I/F
32
33
28
38
27
36
L
R
Y
B
OrB
LgB
i238
B584
B361
F108
F155
F156
F78
LgB
2
Sb
10
14
Or
6
Or
2
OrB
1
Or
11
13
Sb
3
Sb
1
THROUGH JOINT
CONNECTOR
AMBIENT
SENSOR
F A/C-05
G A/C-05
H A/C-05
I A/C-05
B
WL
WL
B
C6
31
34
BODY
INTEGRATED
UNIT
C: i84
i88
A/C CONTROL PANEL
E
REF. TO GND
[GND-06]
F78 (BLACK)
i229
B361 (GRAY)
F108 (GRAY)
F155 (BLACK)
i238
C: i84 (BLACK)
i10
i88
WI-41806

A/C-04

A/C-04

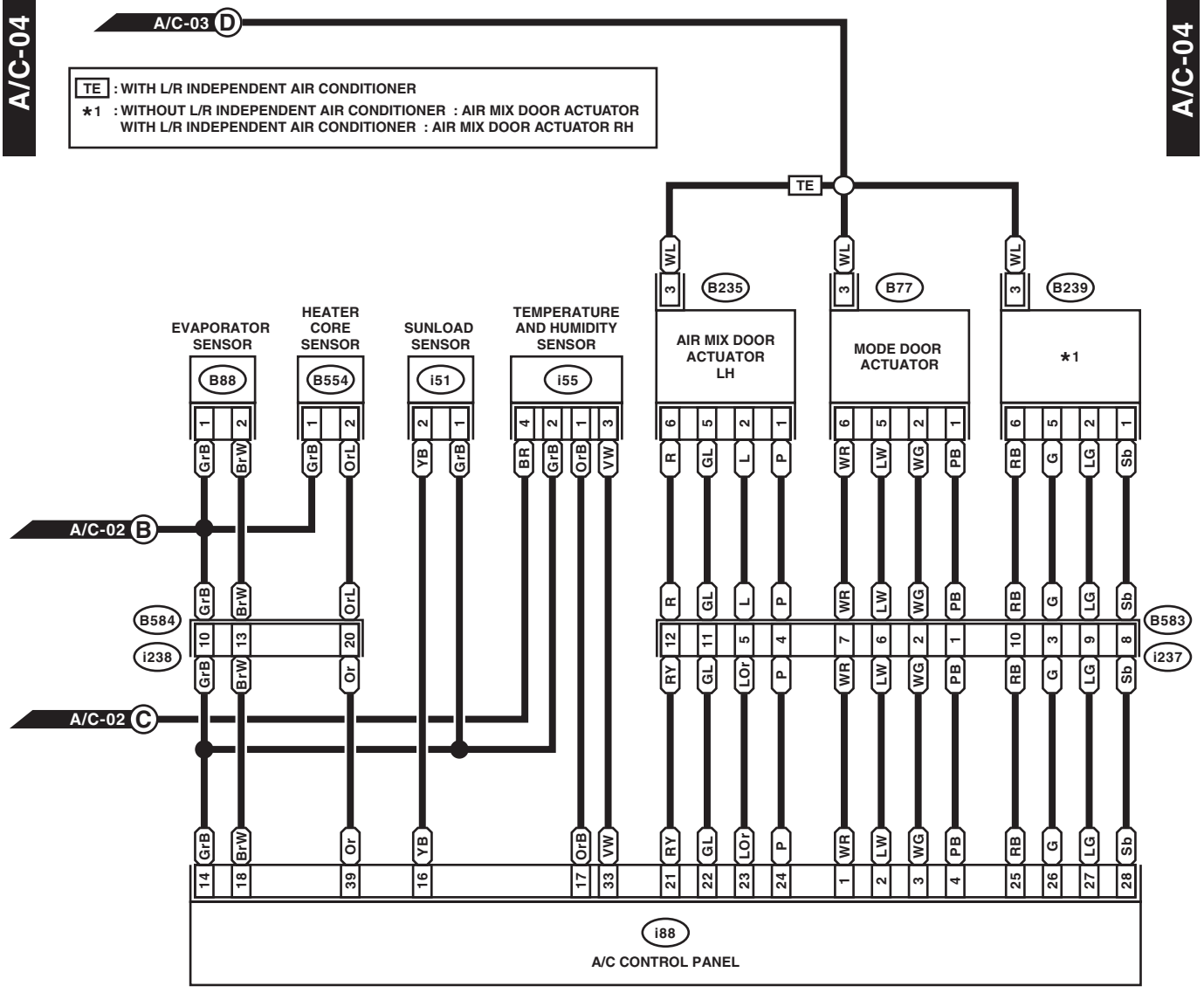

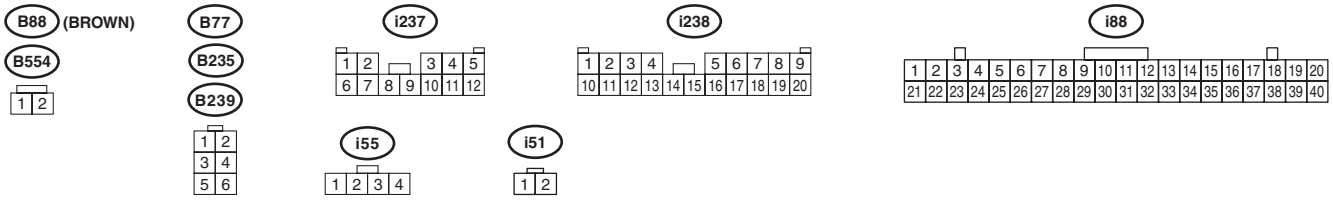

WI-41807

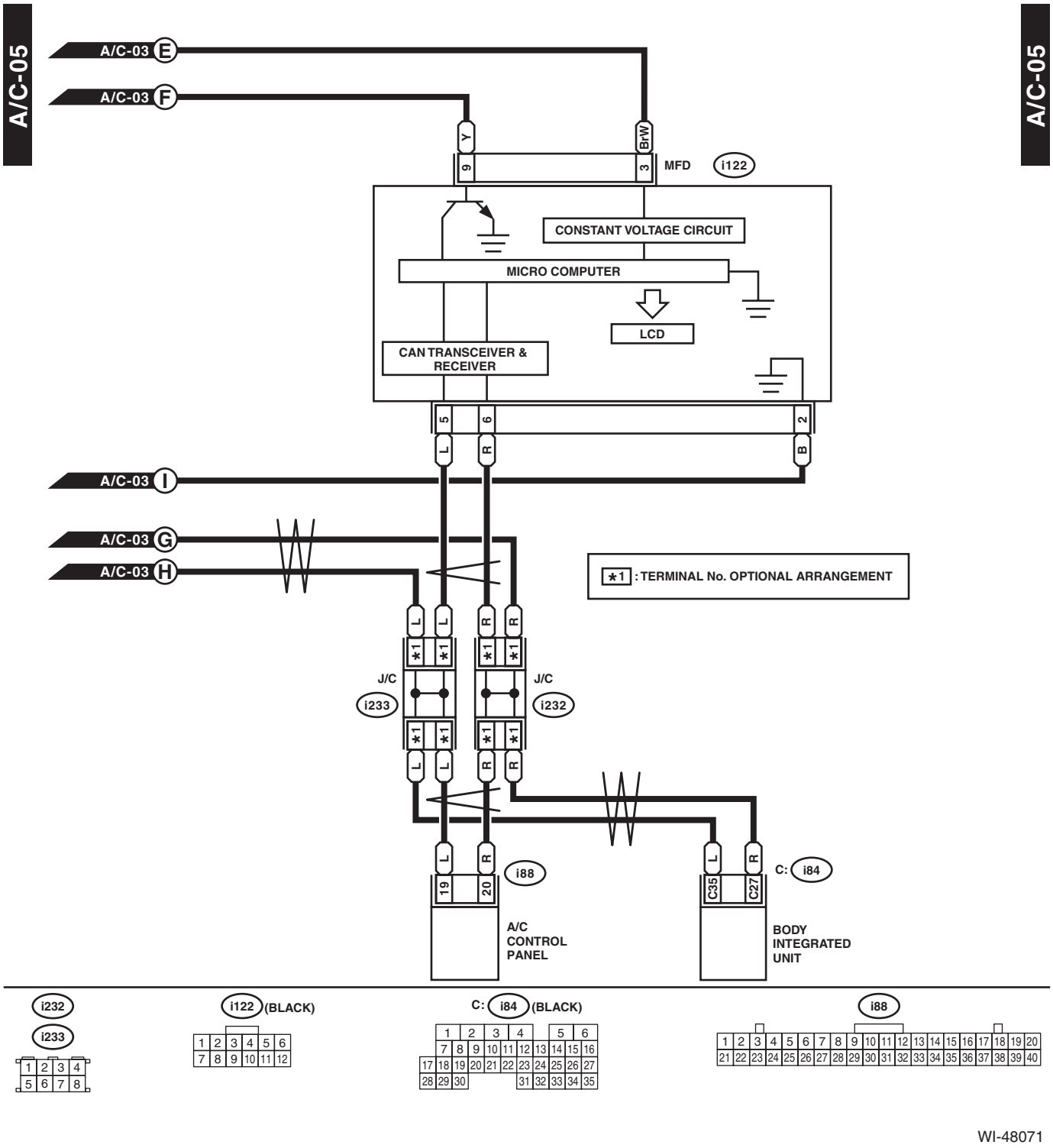
A/C-05
A/C-05
A/C-03 E
A/C-03 F
A/C-03 I
A/C-03 G
A/C-03 H
Y
Br-W
9
3
MFD
i122
CONSTANT VOLTAGE CIRCUIT
MICRO COMPUTER
LCD
CAN TRANSCEIVER & RECEIVER
5
6
2
L
R
B
*1 : TERMINAL No. OPTIONAL ARRANGEMENT
J/C
i233
J/C
i232
i88
19
20
A/C CONTROL PANEL
C: i84
C35
C27
BODY INTEGRATED UNIT
i232
i233
i122 (BLACK)
C: i84 (BLACK)
i88

WI-48071

8. Audio System

A: WIRING DIAGRAM

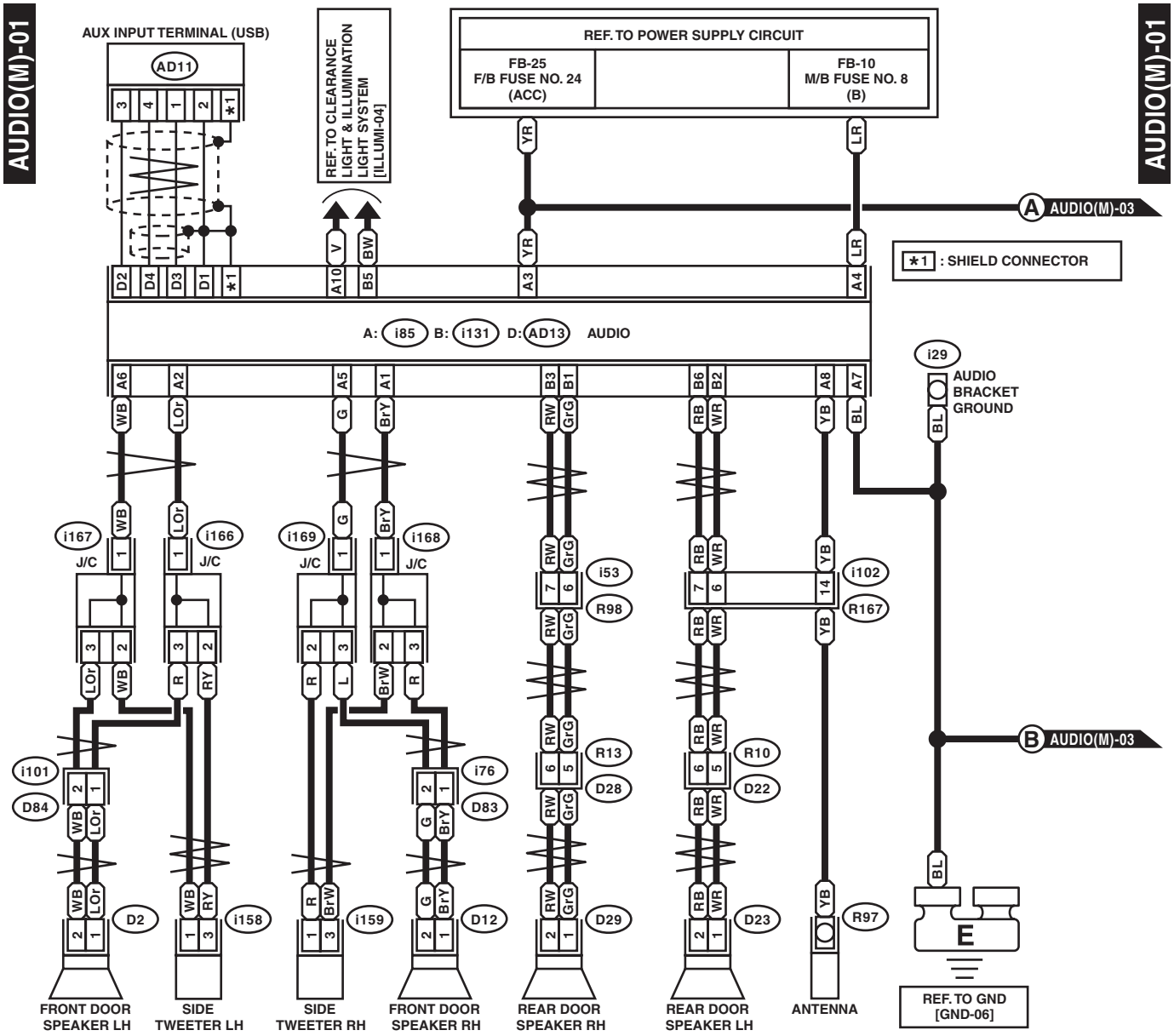

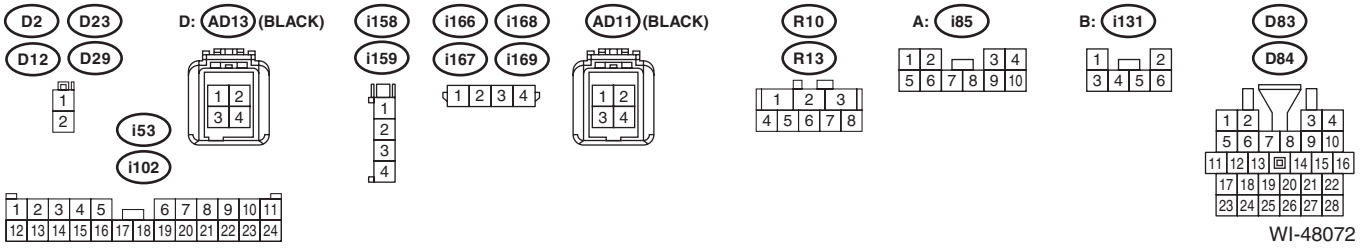

WIRING SYSTEM

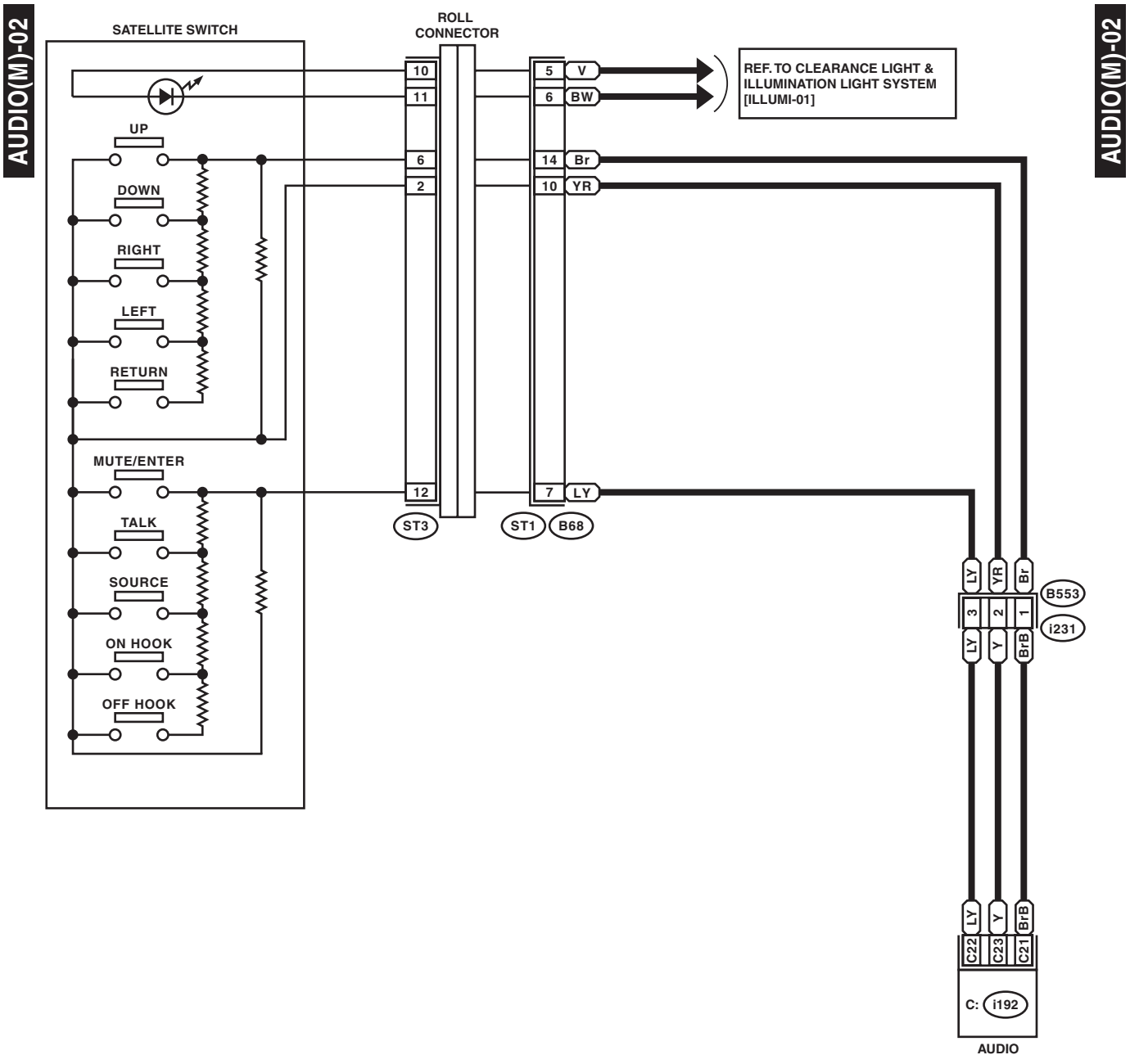

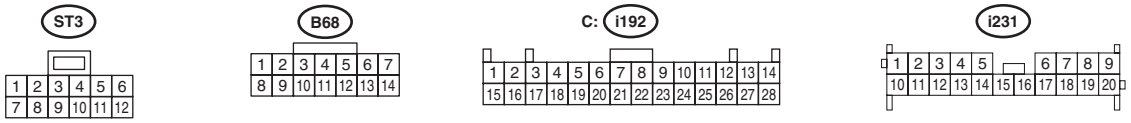

WI-48073

AUDIO(M)-03

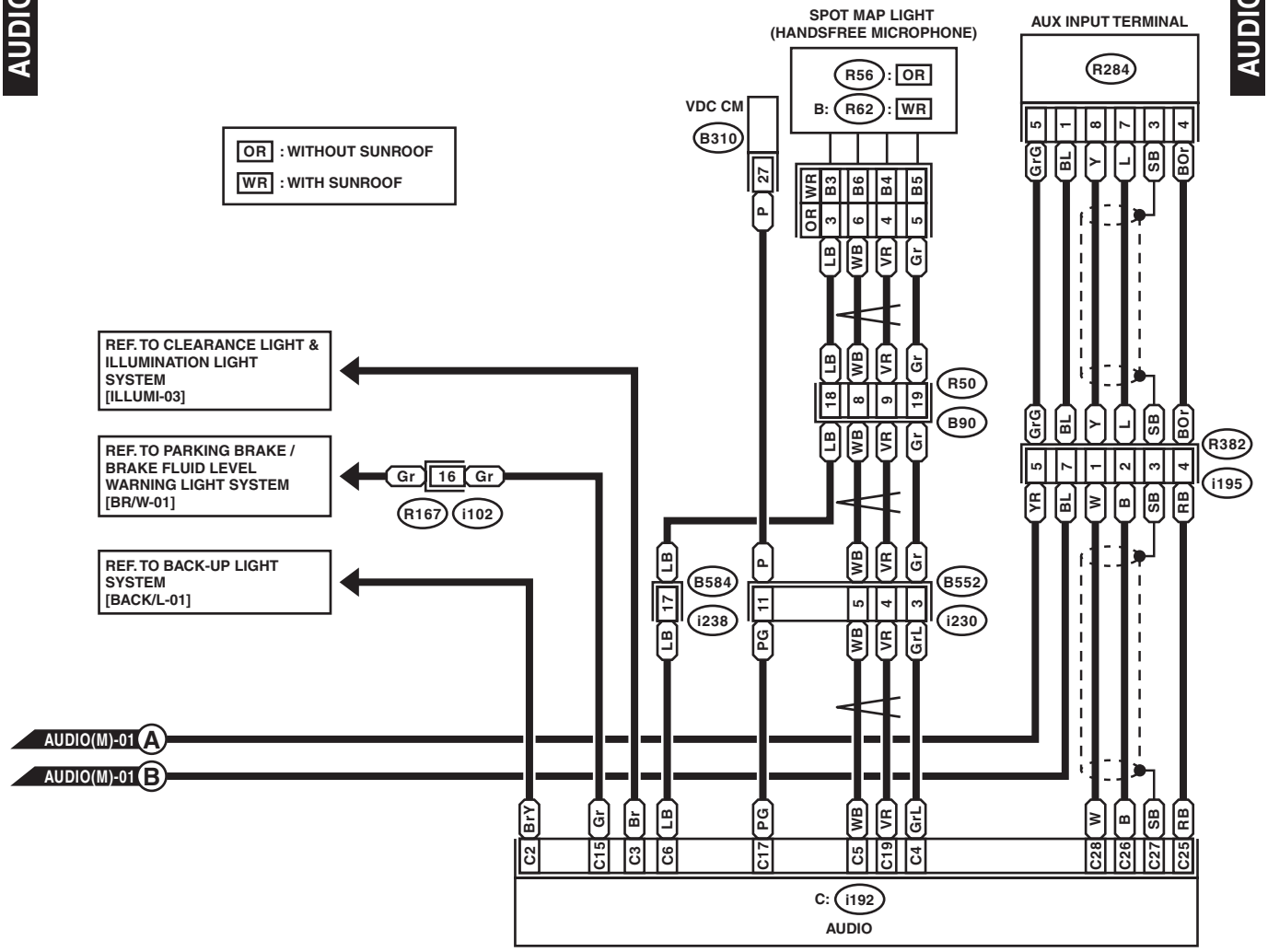

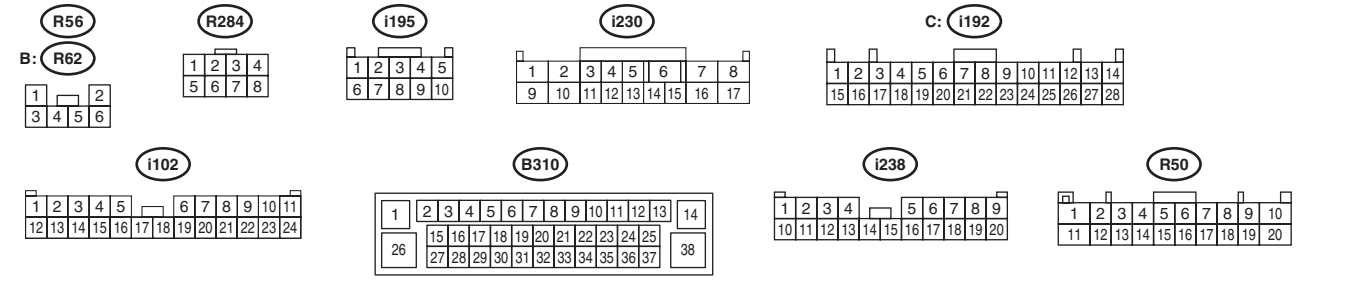

WI-48074

9. Back-up Light System

A: WIRING DIAGRAM

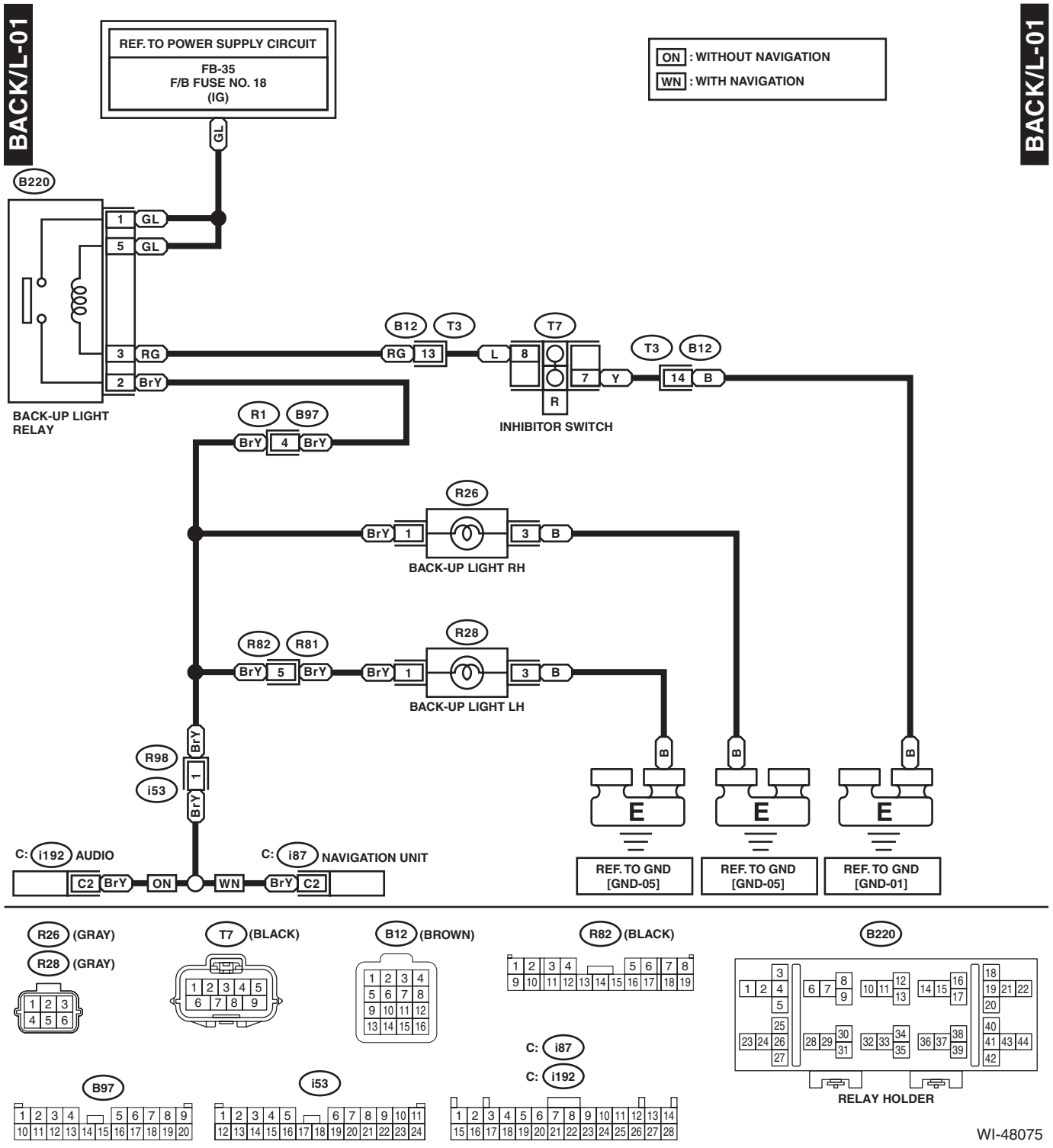

10.CAN Communication System

A: WIRING DIAGRAM

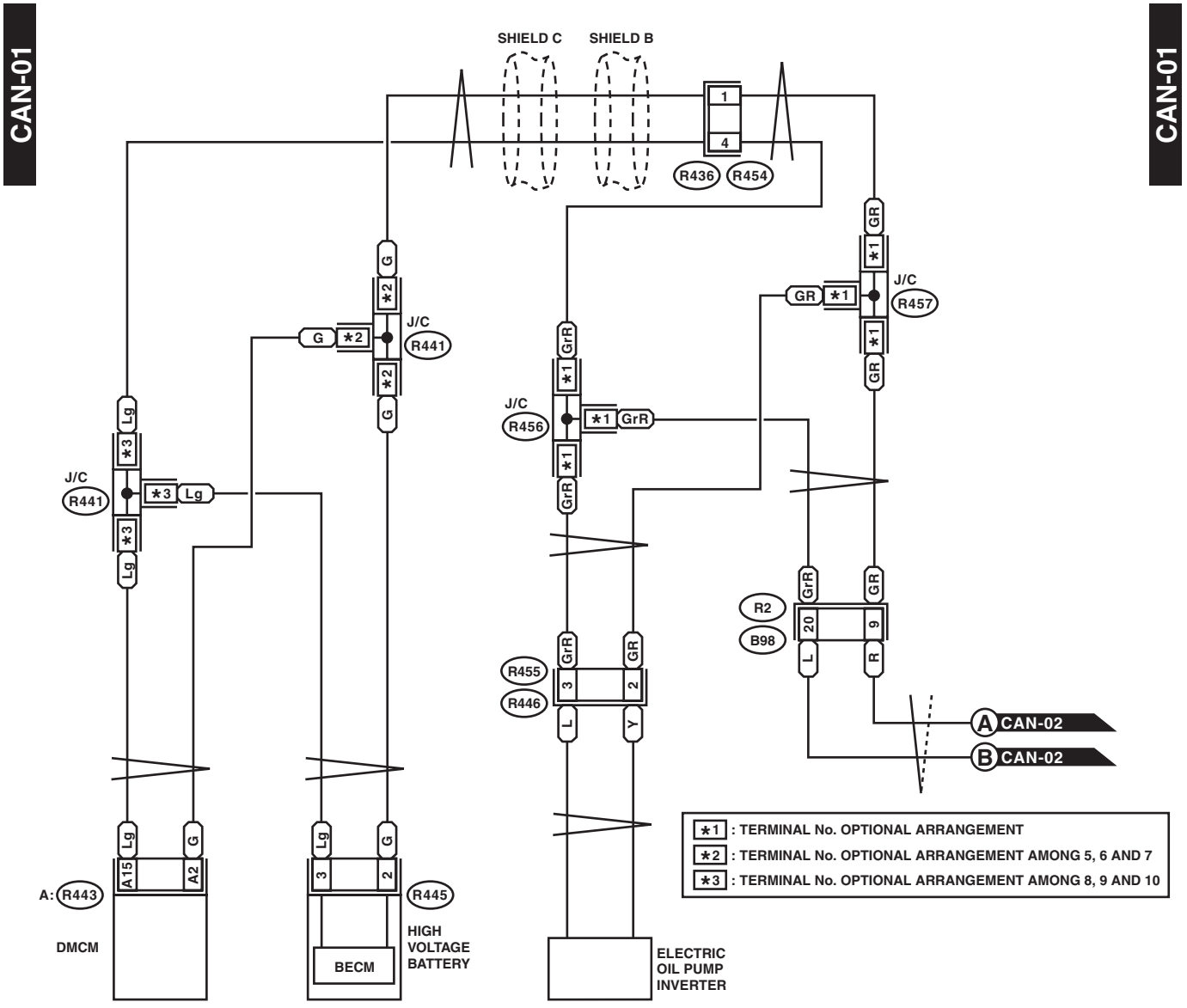

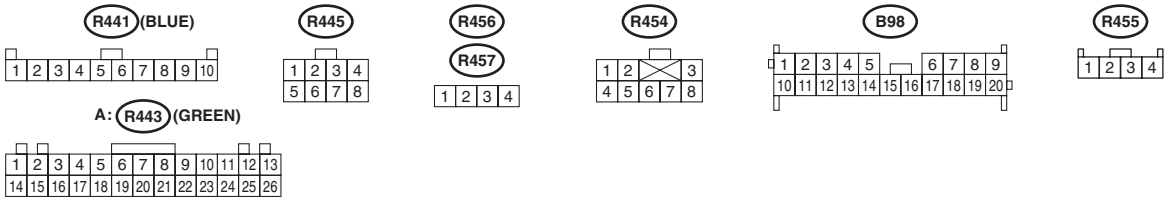

WI-41813

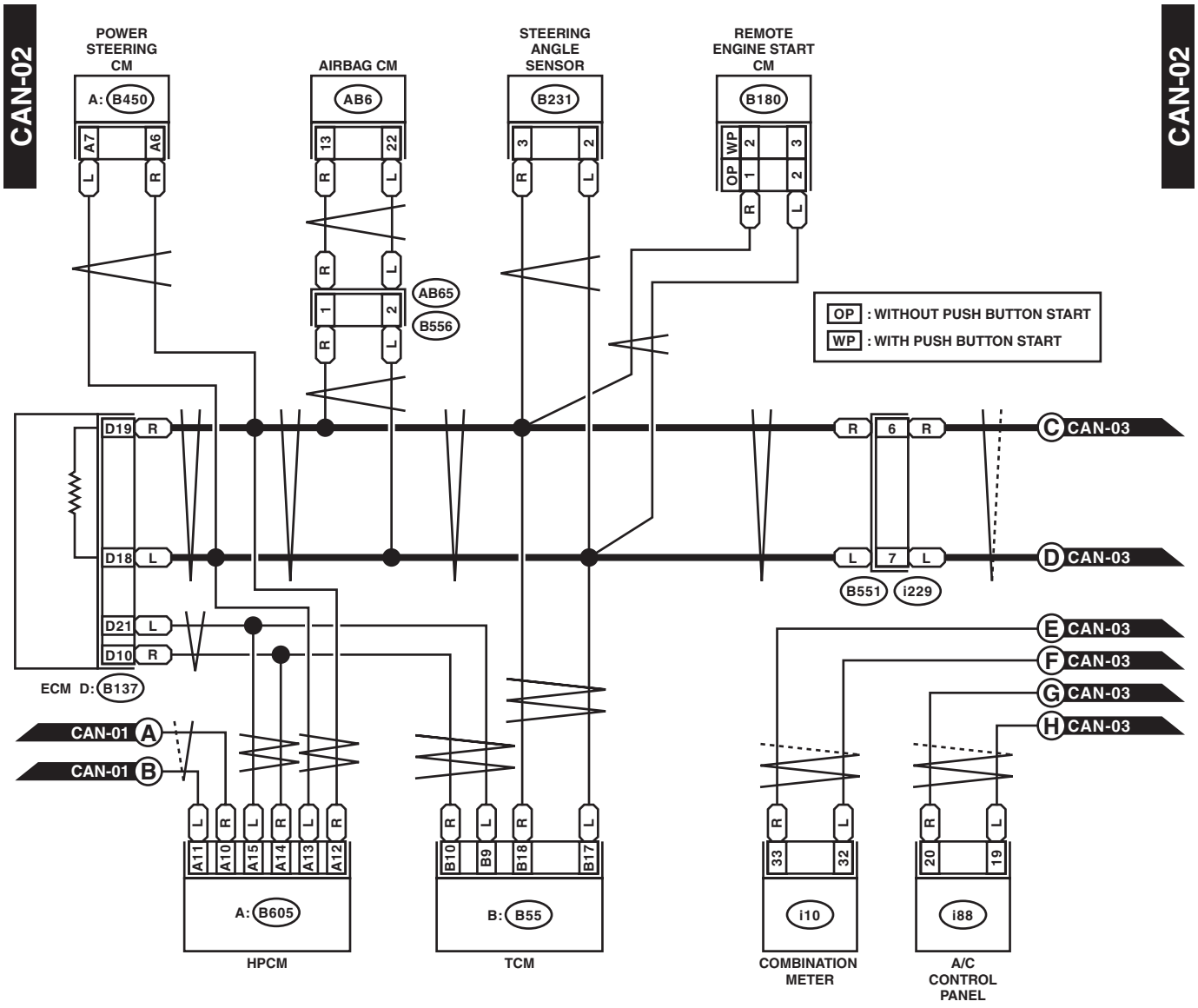
CAN-02
CAN-02
POWER STEERING CM
A: B450
A7
A6
AIRBAG CM
AB6
13
22
STEERING ANGLE SENSOR
B231
3
2
REMOTE ENGINE START CM
B180
OP
WP
AB65
B556
OP : WITHOUT PUSH BUTTON START
WP : WITH PUSH BUTTON START
D19 R
D18 L
D21 L
D10 R
R 6 R
L 7 L
C CAN-03
D CAN-03
E CAN-03
F CAN-03
G CAN-03
H CAN-03
B551
i229
ECM D: B137
CAN-01 A
CAN-01 B
A11
A10
A15
A14
A13
A12
B10
B9
B18
B17
33
32
20
19
A: B605
B: B55
i10
i88
HPCM
TCM
COMBINATION METER
A/C CONTROL PANEL

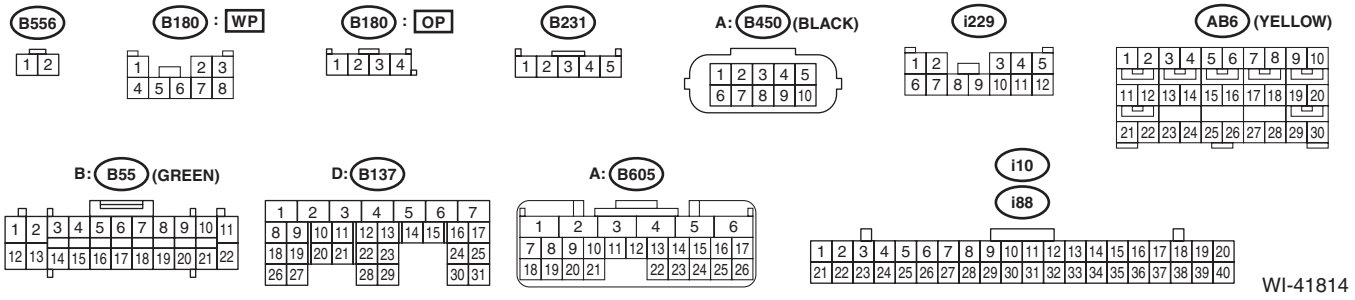
B556
B180 : WP
B180 : OP
B231
A: B450 (BLACK)
i229
AB6 (YELLOW)
B: B55 (GREEN)
D: B137
A: B605
i10
i88

WI-41814

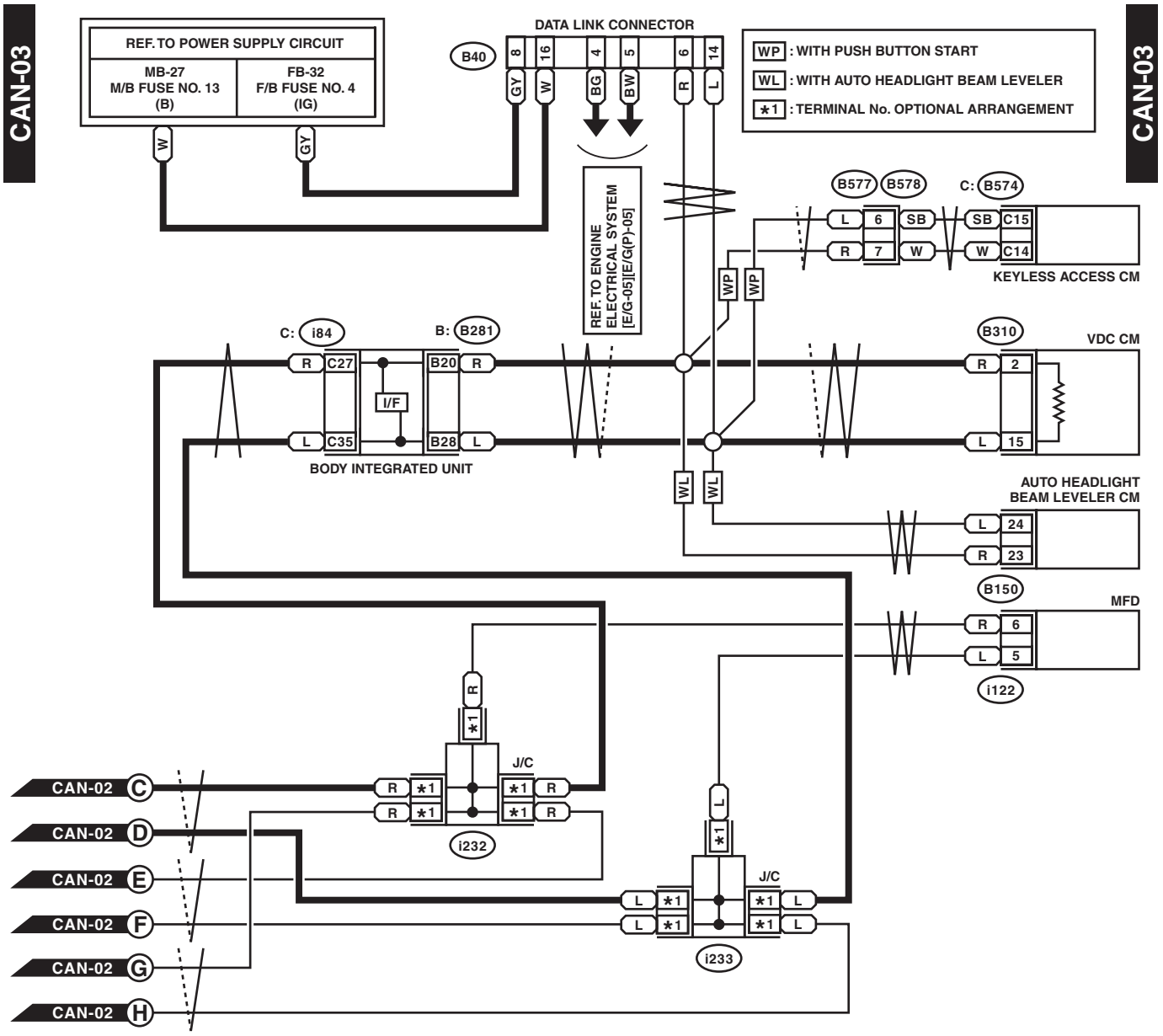
CAN-03
CAN-03
REF. TO POWER SUPPLY CIRCUIT
MB-27
M/B FUSE NO. 13
(B)
FB-32
F/B FUSE NO. 4
(IG)
DATA LINK CONNECTOR
B40
WP : WITH PUSH BUTTON START
WL : WITH AUTO HEADLIGHT BEAM LEVELER
*1 : TERMINAL No. OPTIONAL ARRANGEMENT
REF. TO ENGINE ELECTRICAL SYSTEM [E/G-05][E/G(P)-05]
B577
B578
C: B574
KEYLESS ACCESS CM
C: i84
B: B281
I/F
BODY INTEGRATED UNIT
B310
VDC CM
AUTO HEADLIGHT BEAM LEVELER CM
B150
MFD
i122
J/C
i232
J/C
i233
CAN-02 C
CAN-02 D
CAN-02 E
CAN-02 F
CAN-02 G
CAN-02 H

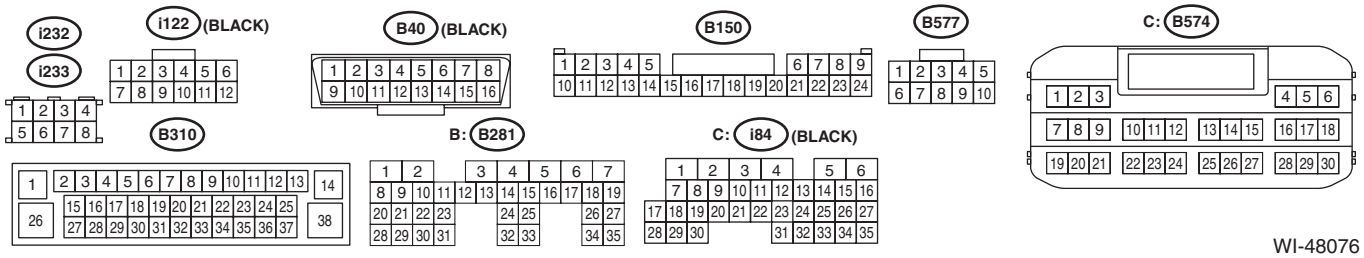
i232
i233
i122 (BLACK)
B40 (BLACK)
B150
B577
C: B574
B310
B: B281
C: i84 (BLACK)

WI-48076

11.Charging System

A: WIRING DIAGRAM

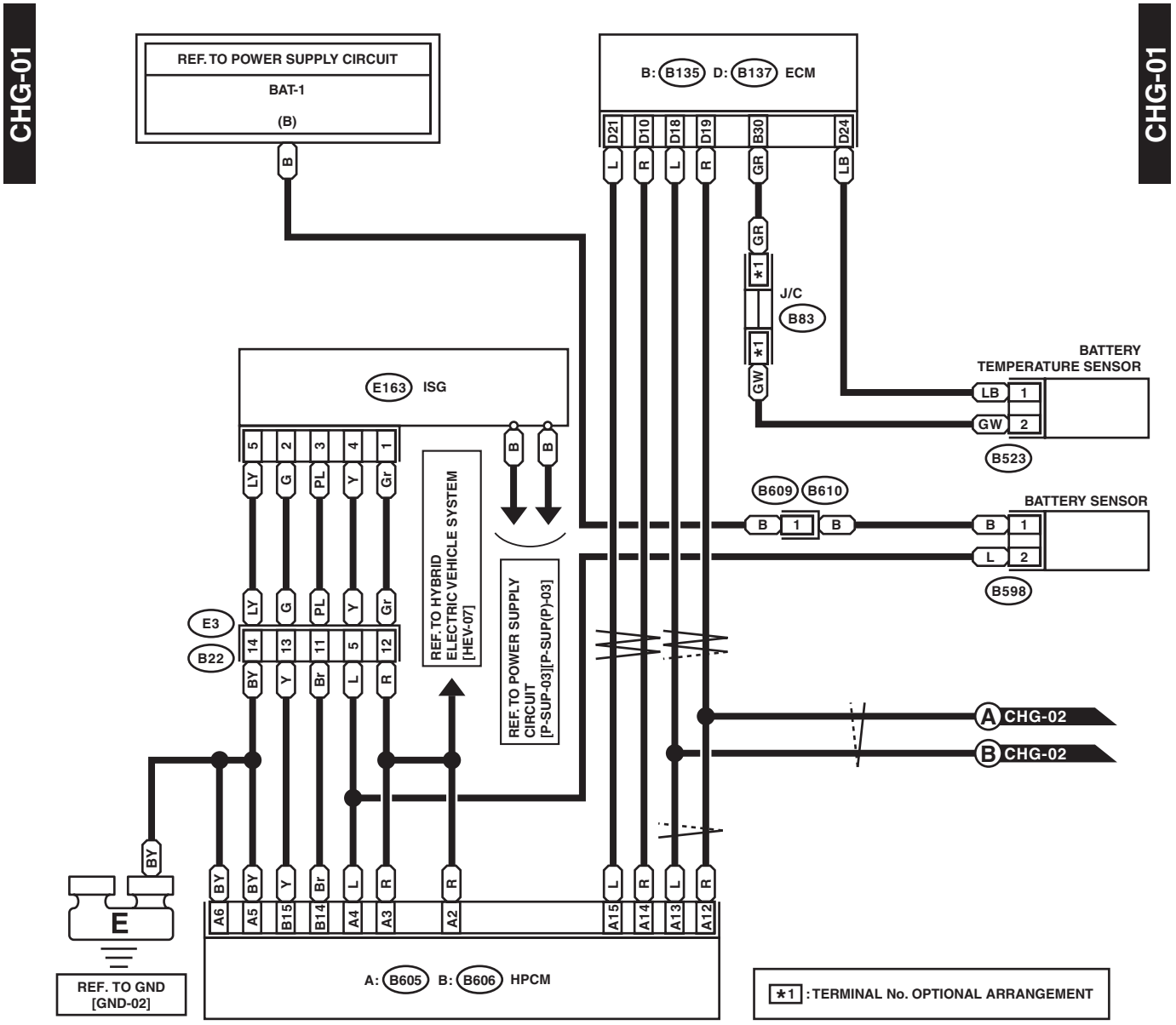

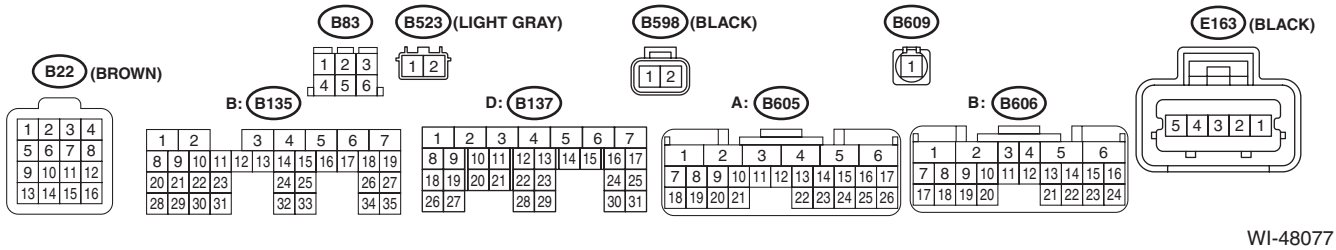

WI-48077

CHG-02

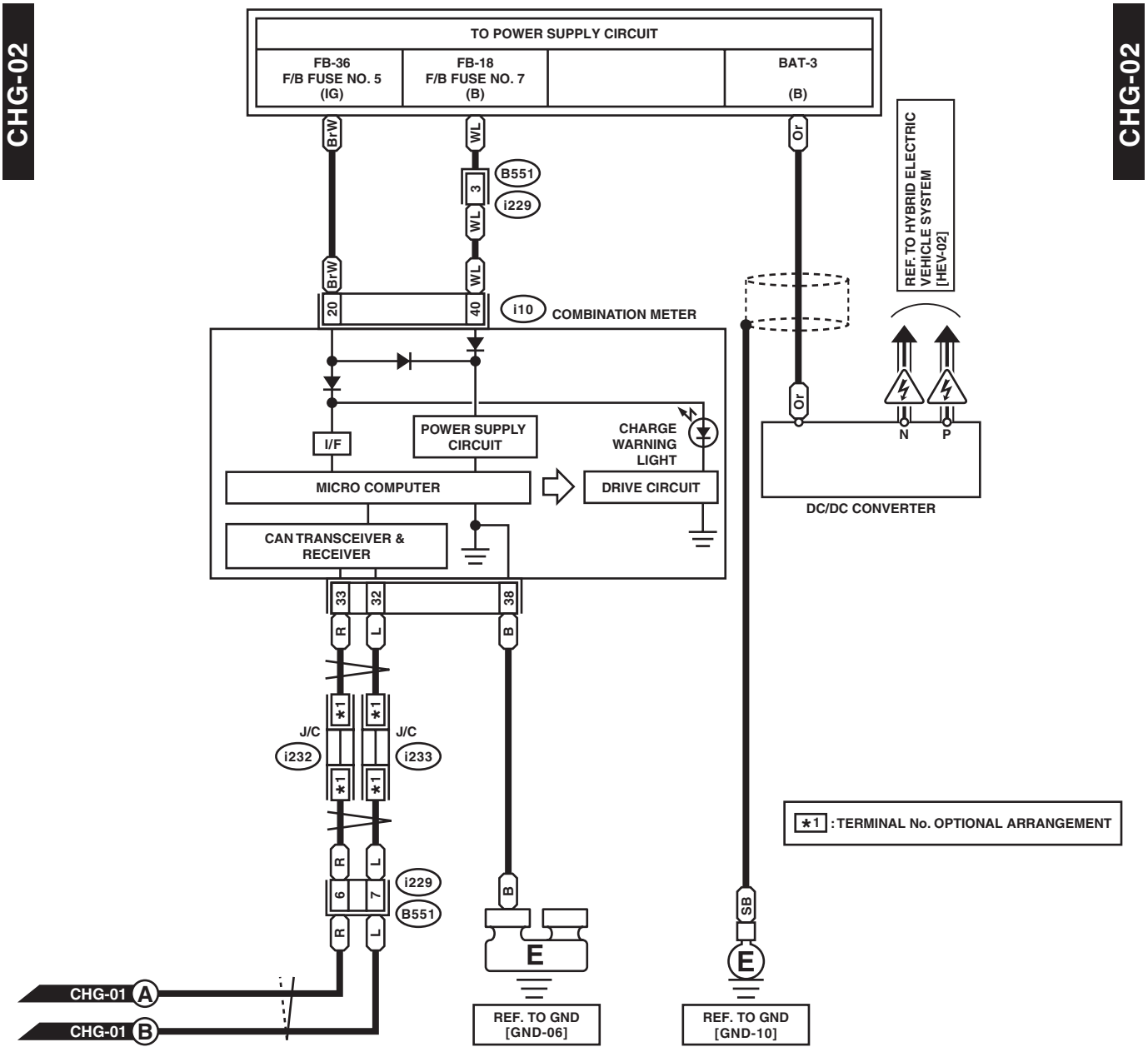

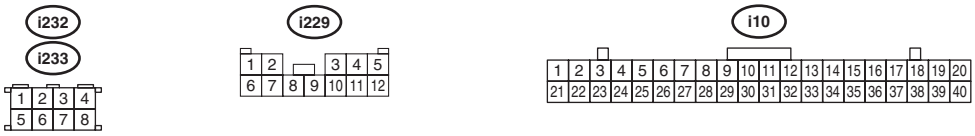

WI-41817

12.Clearance Light and Illumination Light System

A: WIRING DIAGRAM

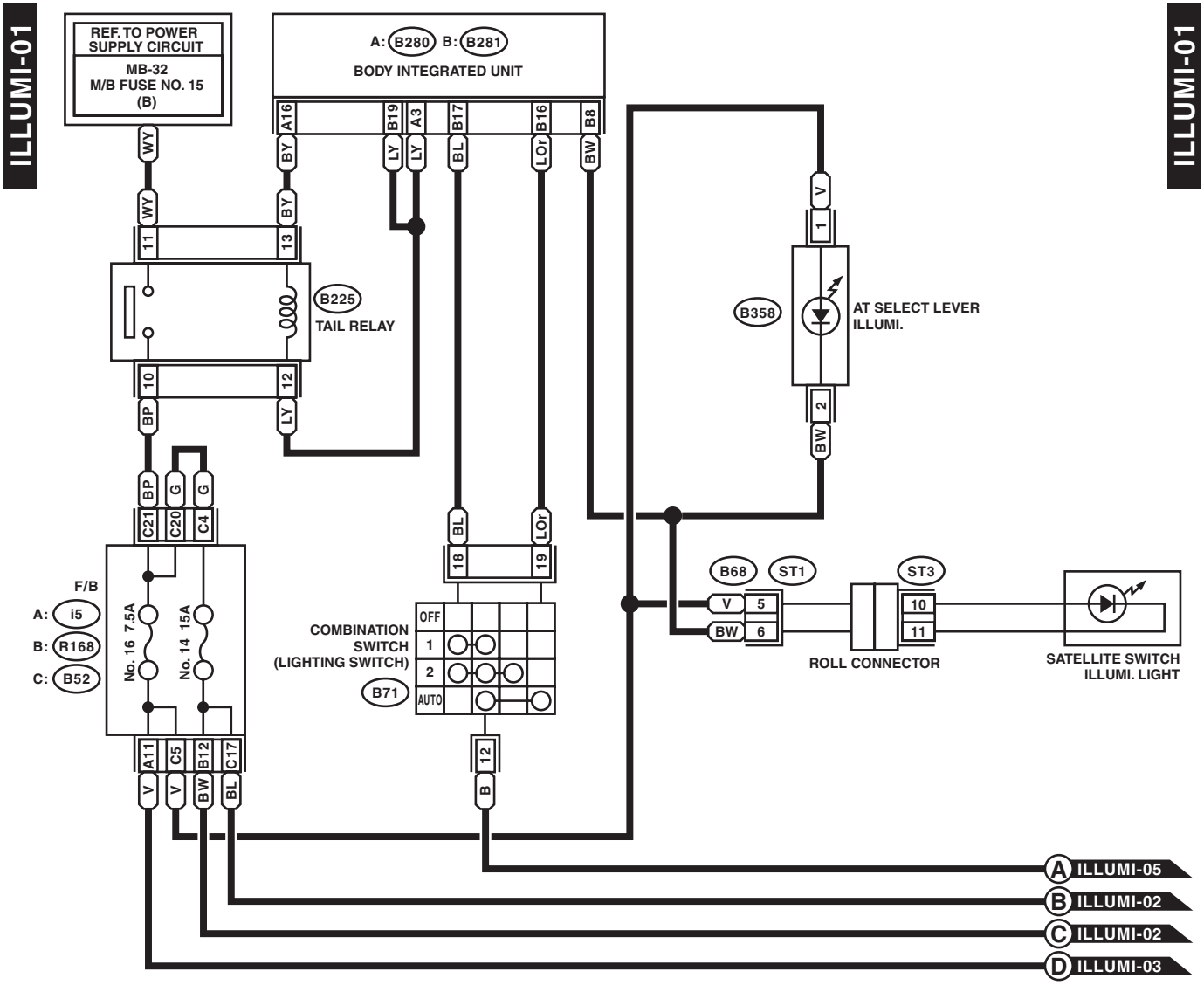

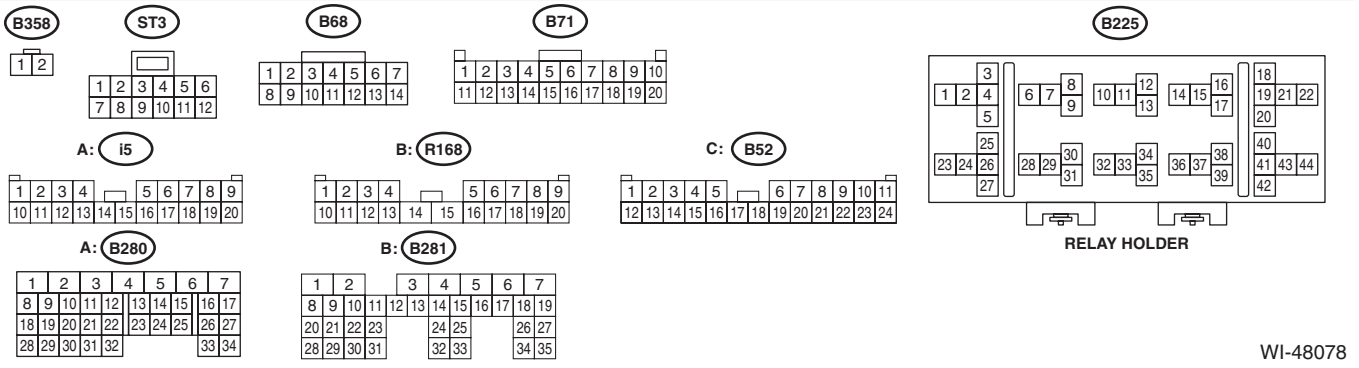

WI-48078

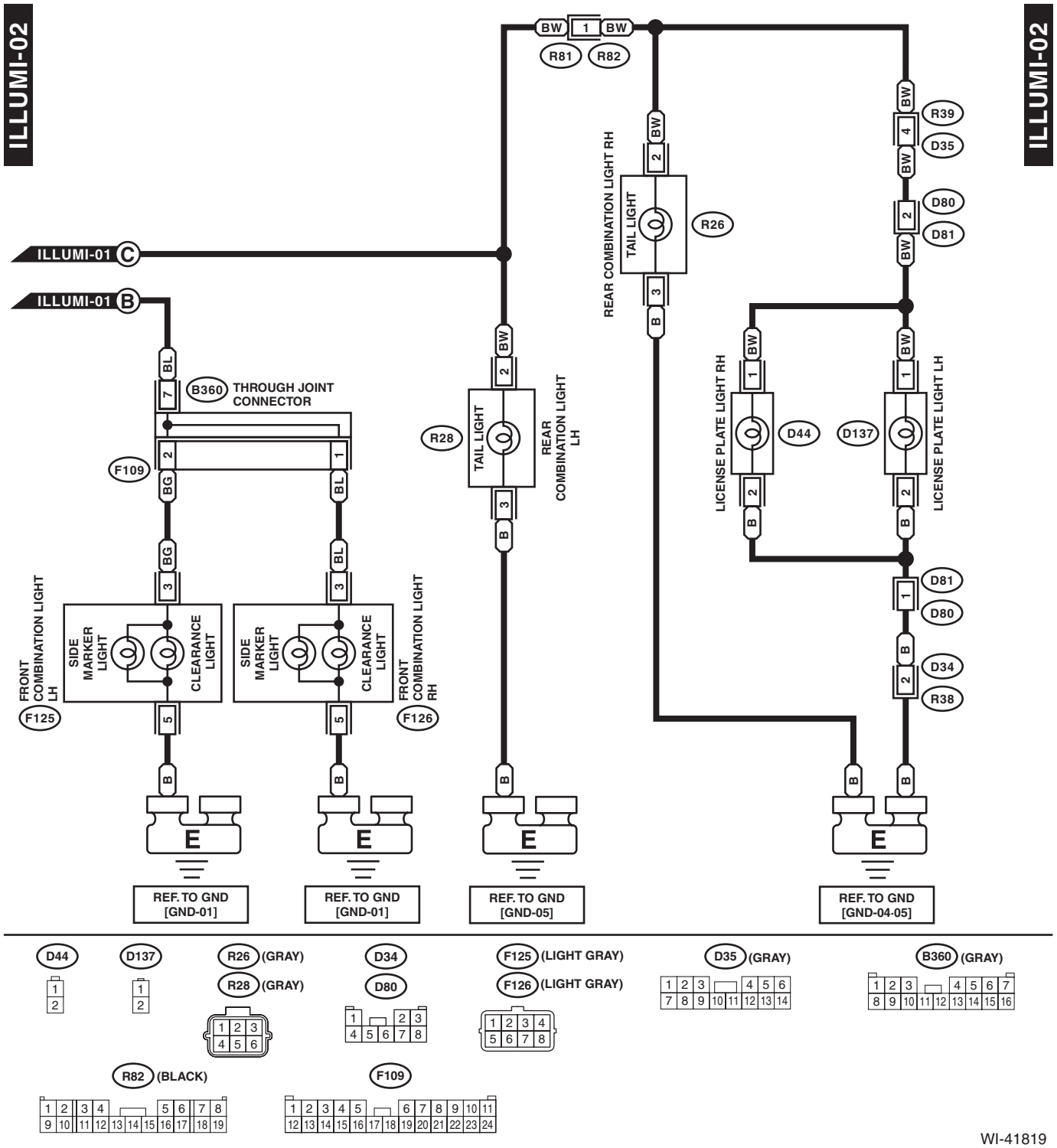
ILLUMI-02
ILLUMI-02
ILLUMI-01 C
ILLUMI-01 B
BW
1
BW
R81
R82
R39
D35
D80
D81
REAR COMBINATION LIGHT RH
TAIL LIGHT
R26
B360
THROUGH JOINT CONNECTOR
F109
R28
TAIL LIGHT
REAR COMBINATION LIGHT LH
LICENSE PLATE LIGHT RH
D44
D137
LICENSE PLATE LIGHT LH
D81
D80
D34
R38
FRONT COMBINATION LIGHT LH
SIDE MARKER LIGHT
CLEARANCE LIGHT
F125
FRONT COMBINATION LIGHT RH
F126
E
REF. TO GND [GND-01]
REF. TO GND [GND-01]
REF. TO GND [GND-05]
REF. TO GND [GND-04·05]
D44
D137
R26 (GRAY)
R28 (GRAY)
D34
D80
F125 (LIGHT GRAY)
F126 (LIGHT GRAY)
D35 (GRAY)
B360 (GRAY)
R82 (BLACK)
F109
WI-41819

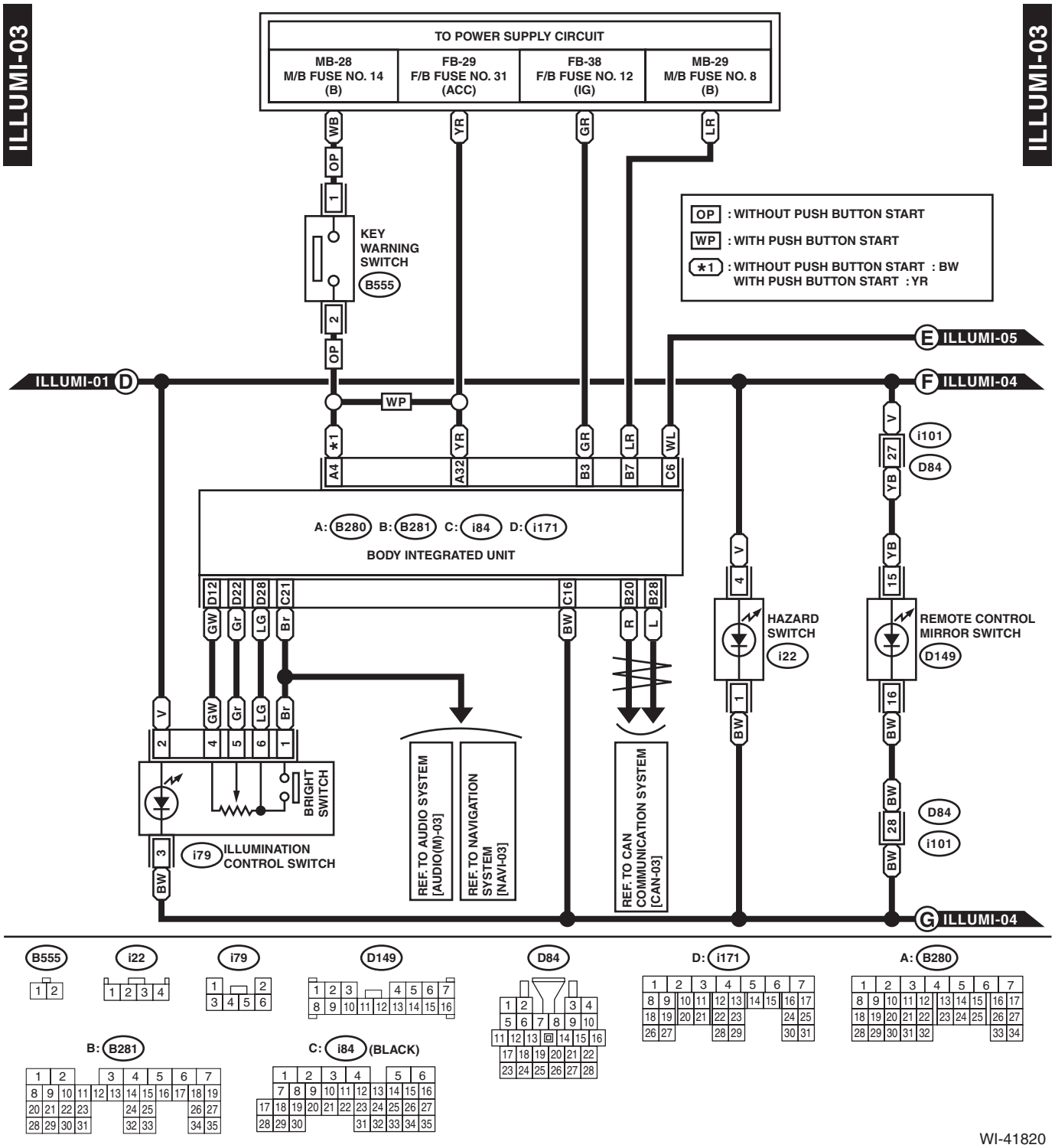
ILLUMI-03
ILLUMI-03
TO POWER SUPPLY CIRCUIT
MB-28 M/B FUSE NO. 14 (B)
FB-29 F/B FUSE NO. 31 (ACC)
FB-38 F/B FUSE NO. 12 (IG)
MB-29 M/B FUSE NO. 8 (B)
OP : WITHOUT PUSH BUTTON START
WP : WITH PUSH BUTTON START
*1 : WITHOUT PUSH BUTTON START : BW
WITH PUSH BUTTON START : YR
KEY WARNING SWITCH
B555
ILLUMI-01 D
E ILLUMI-05
F ILLUMI-04
G ILLUMI-04
A: B280 B: B281 C: i84 D: i171
BODY INTEGRATED UNIT
HAZARD SWITCH
i22
REMOTE CONTROL MIRROR SWITCH
D149
BRIGHT SWITCH
i79 ILLUMINATION CONTROL SWITCH
REF. TO AUDIO SYSTEM [AUDIO(M)-03]
REF. TO NAVIGATION SYSTEM [NAVI-03]
REF. TO CAN COMMUNICATION SYSTEM [CAN-03]
i101
D84
B555
i22
i79
D149
D84
D: i171
A: B280
B: B281
C: i84 (BLACK)

WI-41820

ILLUMI-04

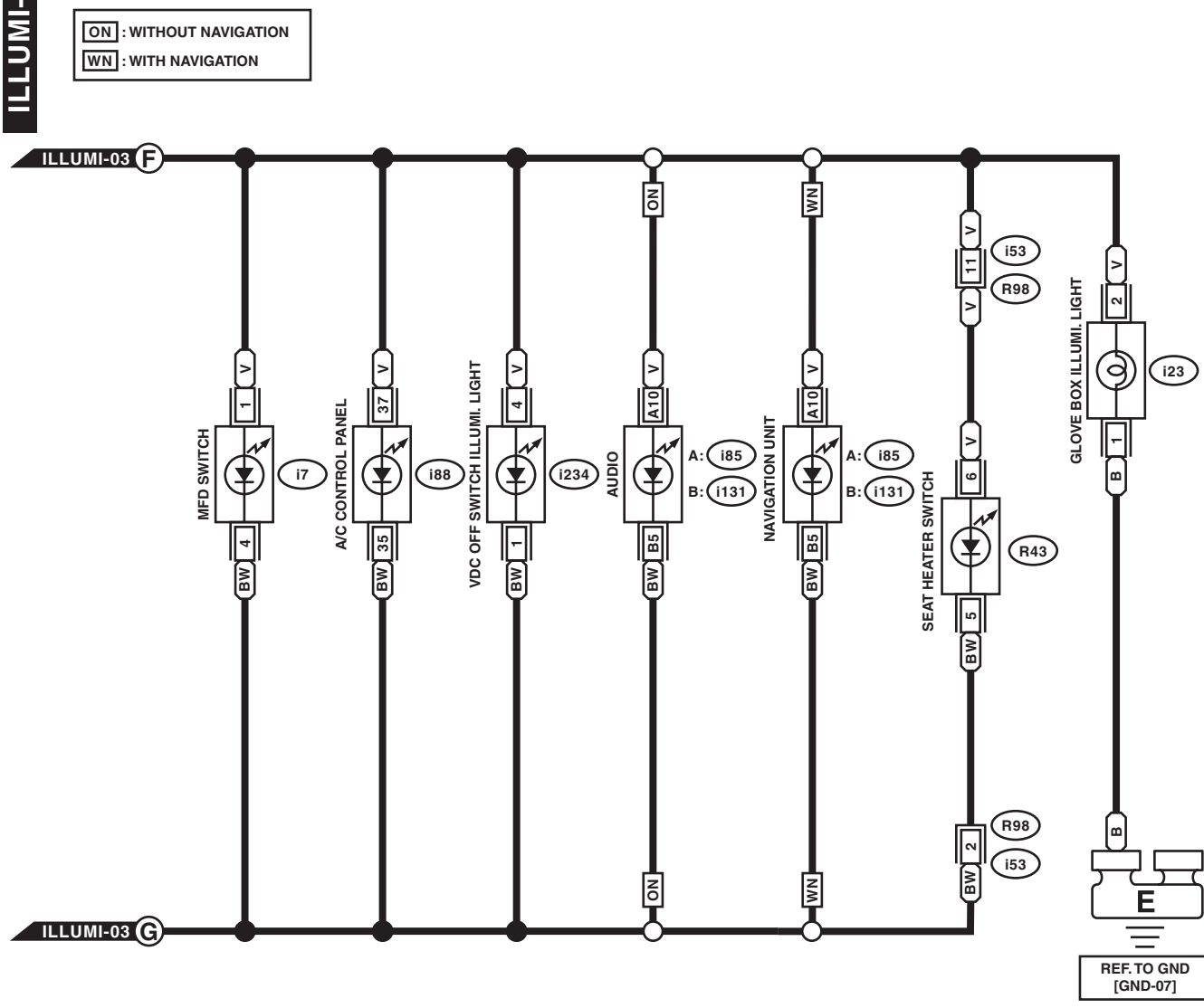

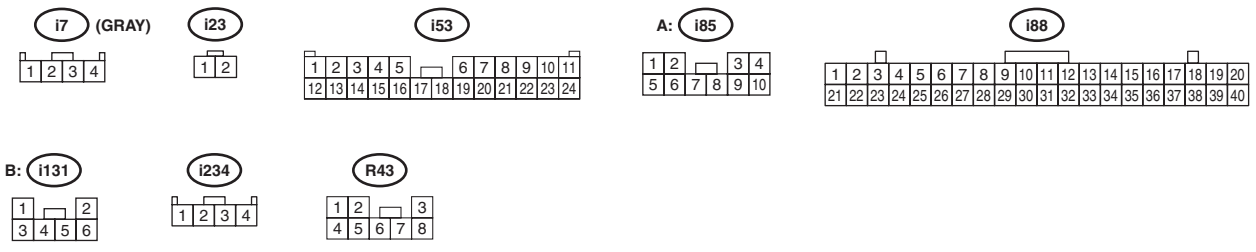

WI-48079

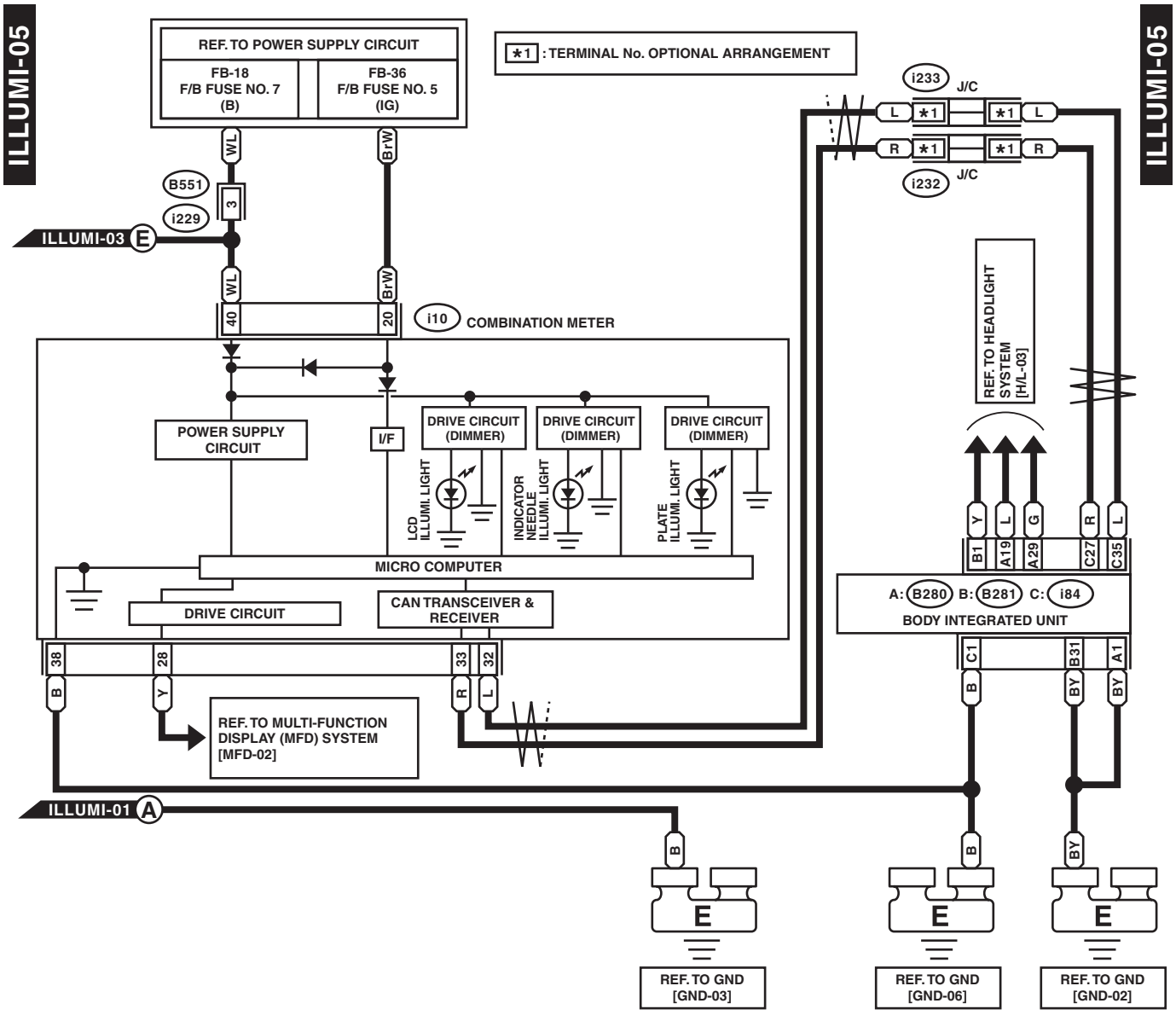
ILLUMI-05
ILLUMI-05
REF. TO POWER SUPPLY CIRCUIT
FB-18
F/B FUSE NO. 7
(B)
FB-36
F/B FUSE NO. 5
(IG)
*1 : TERMINAL No. OPTIONAL ARRANGEMENT
i233 J/C
i232 J/C
B551
i229
ILLUMI-03 E
i10 COMBINATION METER
REF. TO HEADLIGHT SYSTEM [H/L-03]
POWER SUPPLY CIRCUIT
I/F
DRIVE CIRCUIT (DIMMER)
DRIVE CIRCUIT (DIMMER)
DRIVE CIRCUIT (DIMMER)
LCD ILLUMI. LIGHT
INDICATOR NEEDLE ILLUMI. LIGHT
PLATE ILLUMI. LIGHT
MICRO COMPUTER
DRIVE CIRCUIT
CAN TRANSCEIVER & RECEIVER
A: B280 B: B281 C: i84
BODY INTEGRATED UNIT
REF. TO MULTI-FUNCTION DISPLAY (MFD) SYSTEM [MFD-02]
ILLUMI-01 A
REF. TO GND [GND-03]
REF. TO GND [GND-06]
REF. TO GND [GND-02]

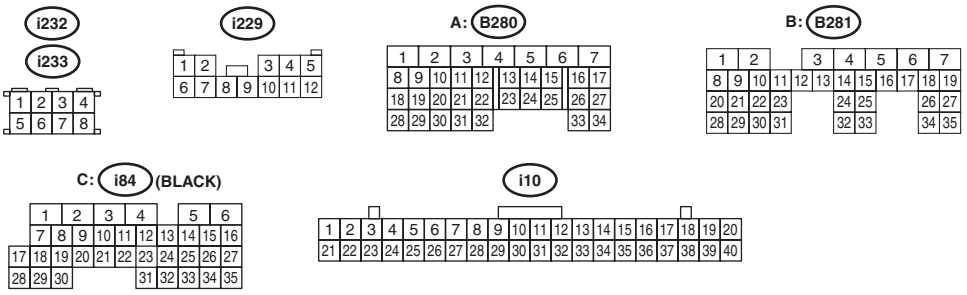
i232
i233
i229
A: B280
B: B281
C: i84 (BLACK)
i10

WI-48080

13.Combination Meter System

A: WIRING DIAGRAM

C/M-01

C/M-01

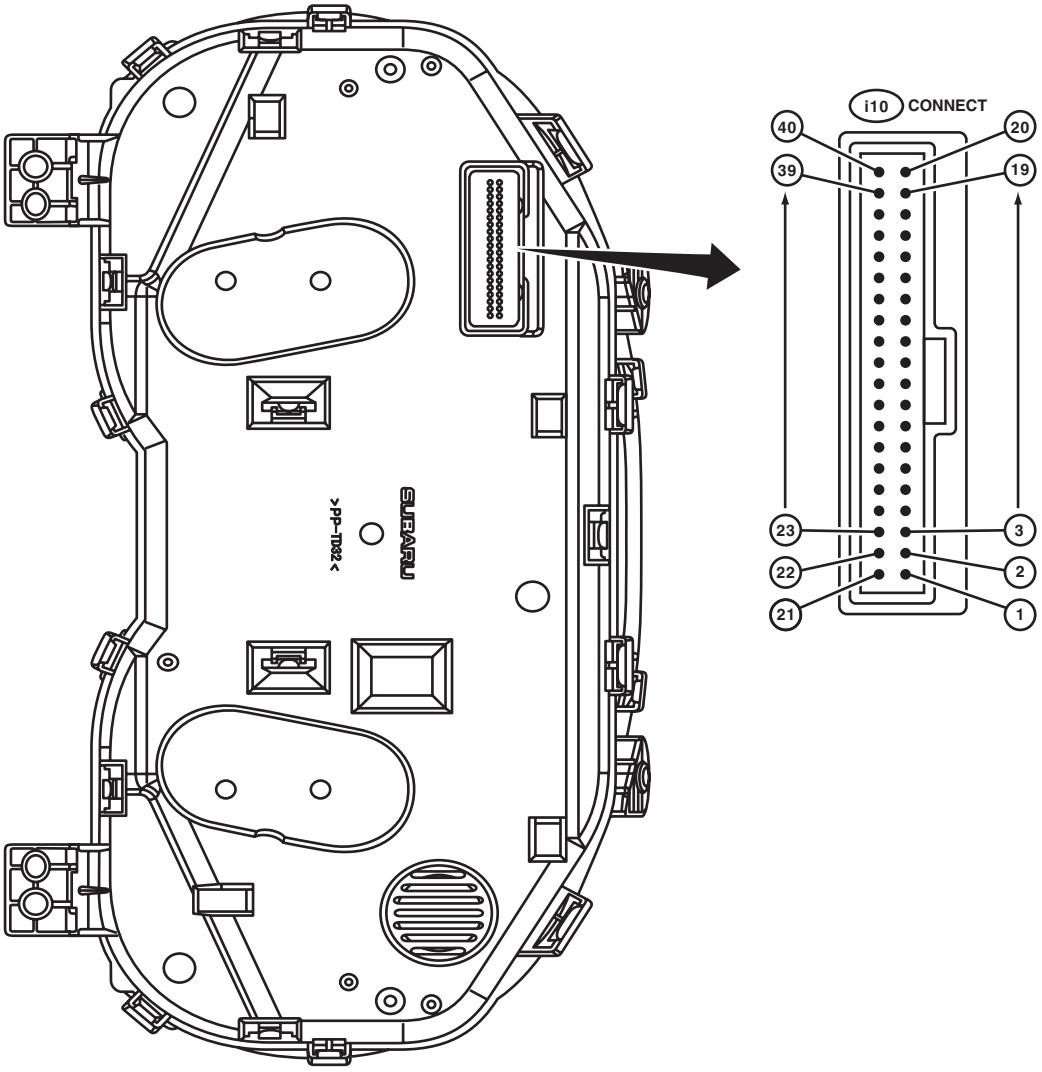

WI-34175

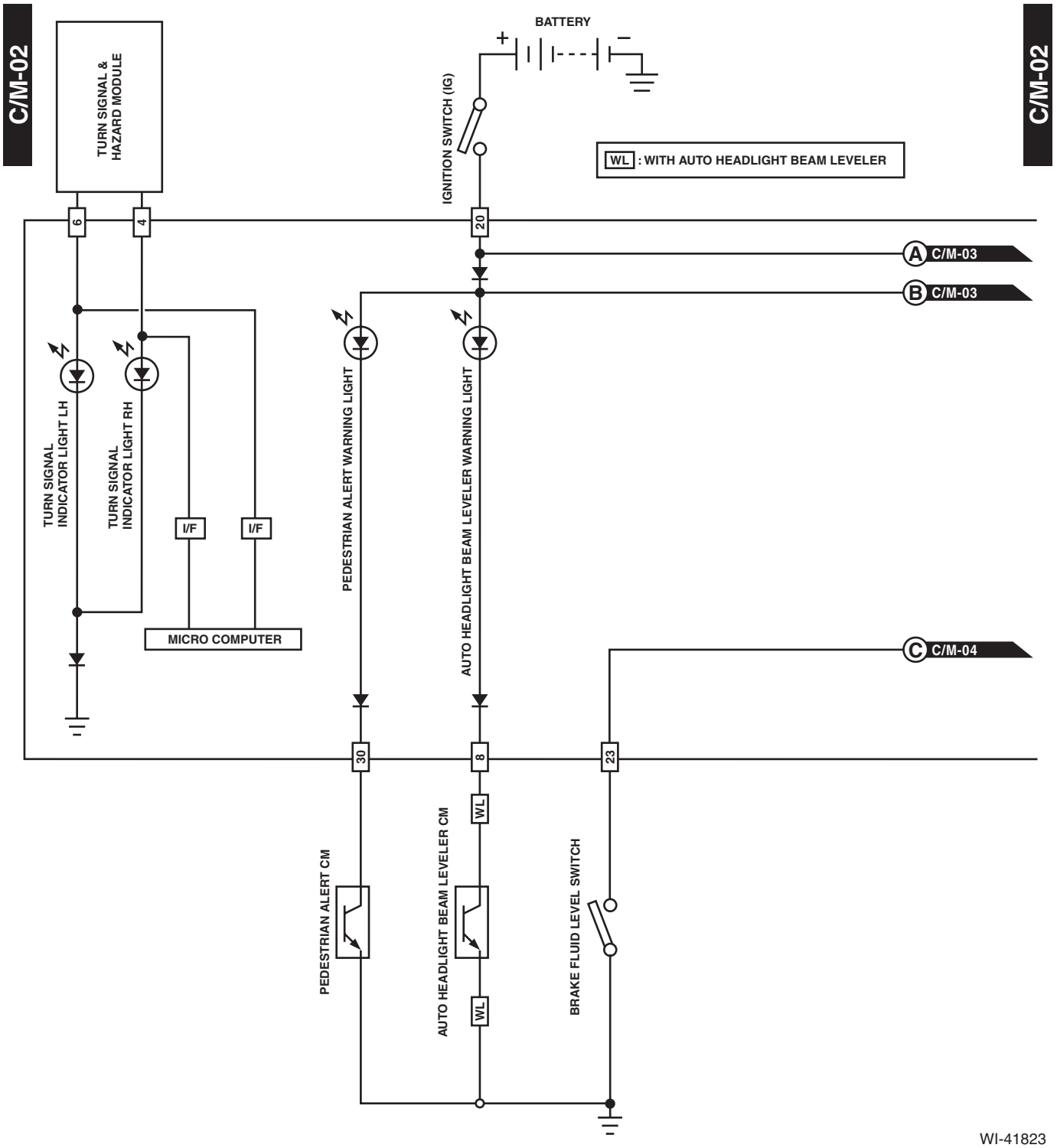
C/M-02
TURN SIGNAL & HAZARD MODULE
BATTERY
IGNITION SWITCH (IG)
WL : WITH AUTO HEADLIGHT BEAM LEVELER
C/M-02
6
4
20
A C/M-03
B C/M-03
TURN SIGNAL INDICATOR LIGHT LH
TURN SIGNAL INDICATOR LIGHT RH
I/F
I/F
MICRO COMPUTER
PEDESTRIAN ALERT WARNING LIGHT
AUTO HEADLIGHT BEAM LEVELER WARNING LIGHT
C C/M-04
30
8
23
WL
WL
PEDESTRIAN ALERT CM
AUTO HEADLIGHT BEAM LEVELER CM
BRAKE FLUID LEVEL SWITCH
WI-41823

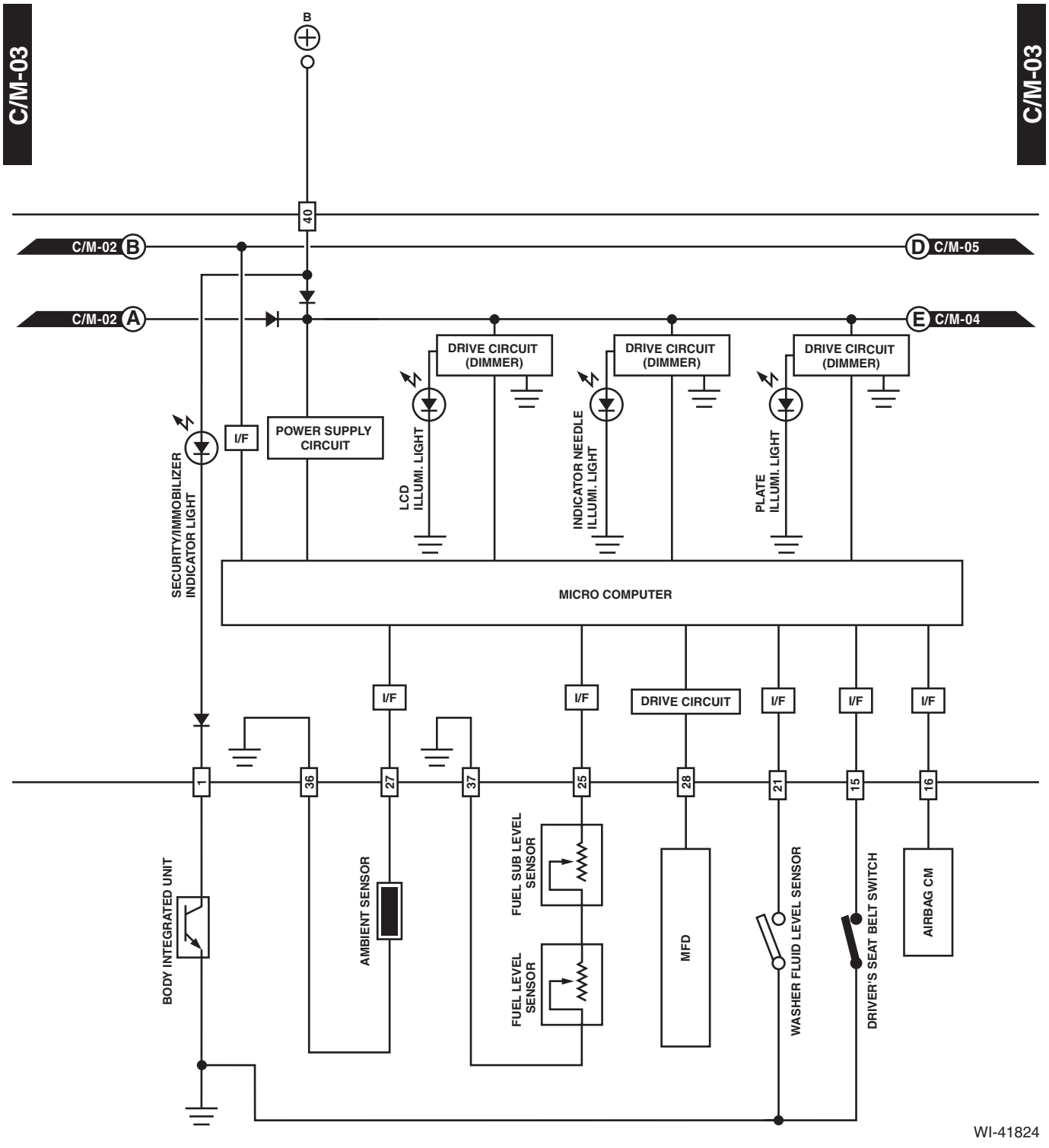
C/M-03
C/M-03
B
40
C/M-02 B
D C/M-05
C/M-02 A
E C/M-04
DRIVE CIRCUIT (DIMMER)
DRIVE CIRCUIT (DIMMER)
DRIVE CIRCUIT (DIMMER)
I/F
POWER SUPPLY CIRCUIT
SECURITY/IMMOBILIZER INDICATOR LIGHT
LCD ILLUMI. LIGHT
INDICATOR NEEDLE ILLUMI. LIGHT
PLATE ILLUMI. LIGHT
MICRO COMPUTER
I/F
I/F
DRIVE CIRCUIT
I/F
I/F
I/F
1
36
27
37
25
28
21
15
16
BODY INTEGRATED UNIT
AMBIENT SENSOR
FUEL SUB LEVEL SENSOR
FUEL LEVEL SENSOR
MFD
WASHER FLUID LEVEL SENSOR
DRIVER'S SEAT BELT SWITCH
AIRBAG CM

WI-41824

C/M-04

WL : WITH AUTO HEADLIGHT BEAM LEVELER
*1 : SEAT BELT
KEY WARNING
HEADLIGHT ON WARNING
CUSTOMIZED
MANUAL SHIFT
KEYLESS ACCESS

C/M-04

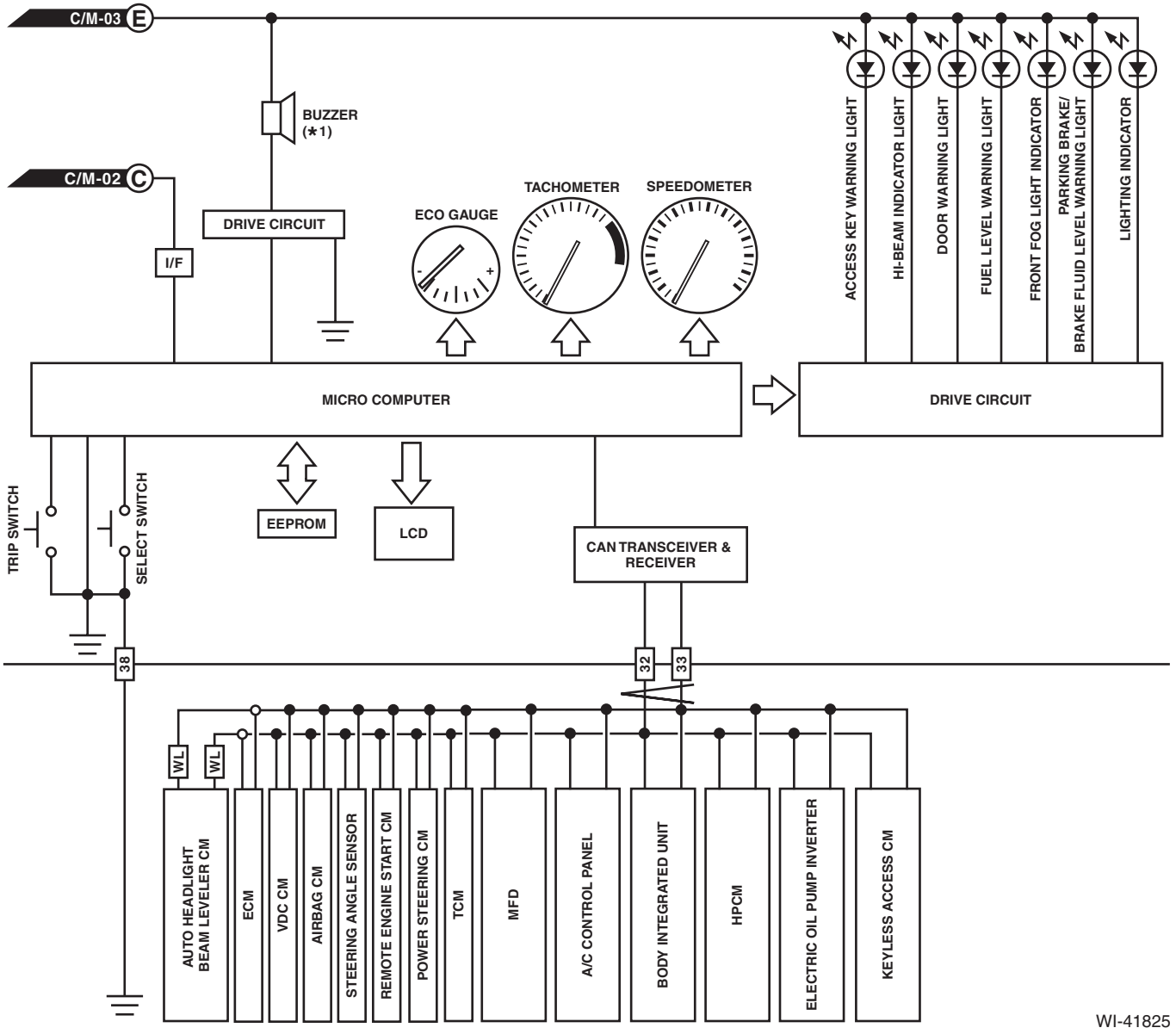

WI-41825

C/M-05

C/M-05

E5 : EXCEPT FOR C5 MODEL

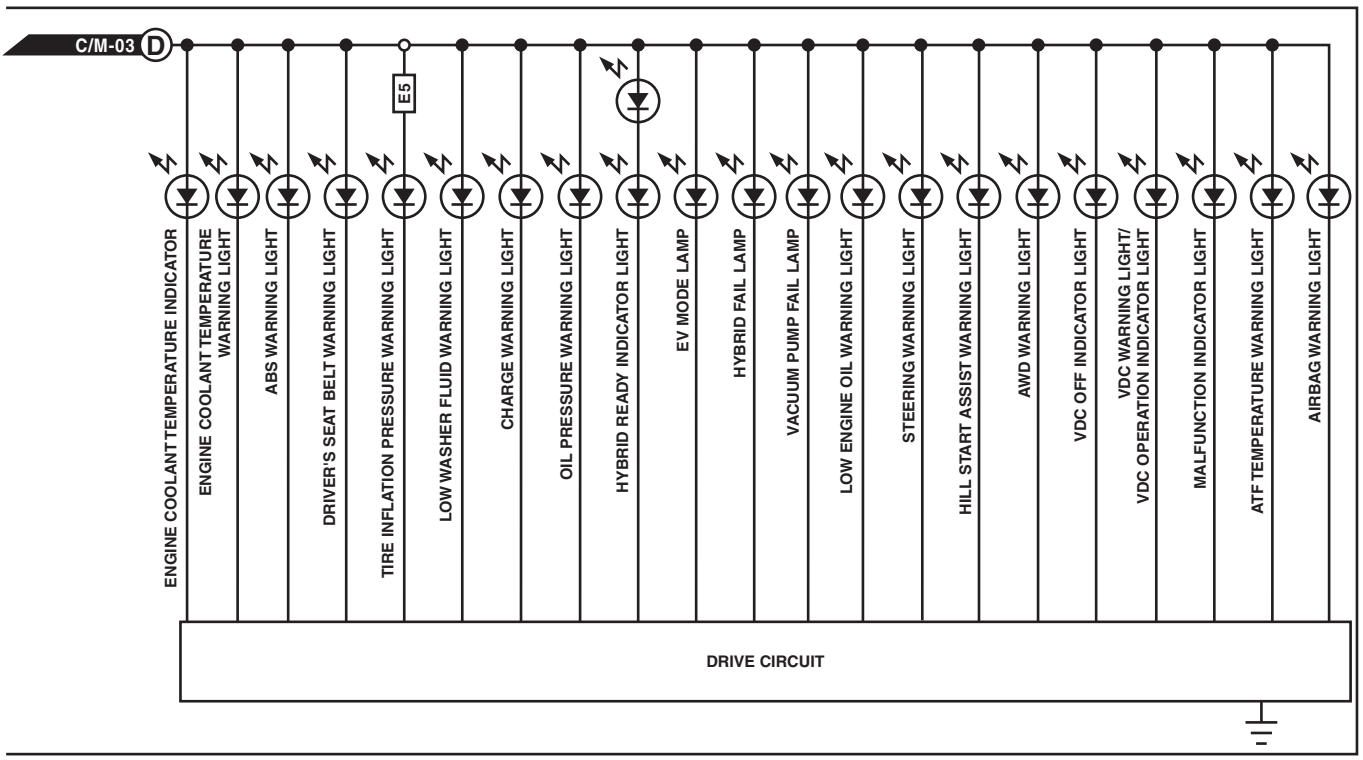

WI-41826

14.Coolant Temperature System

A: WIRING DIAGRAM

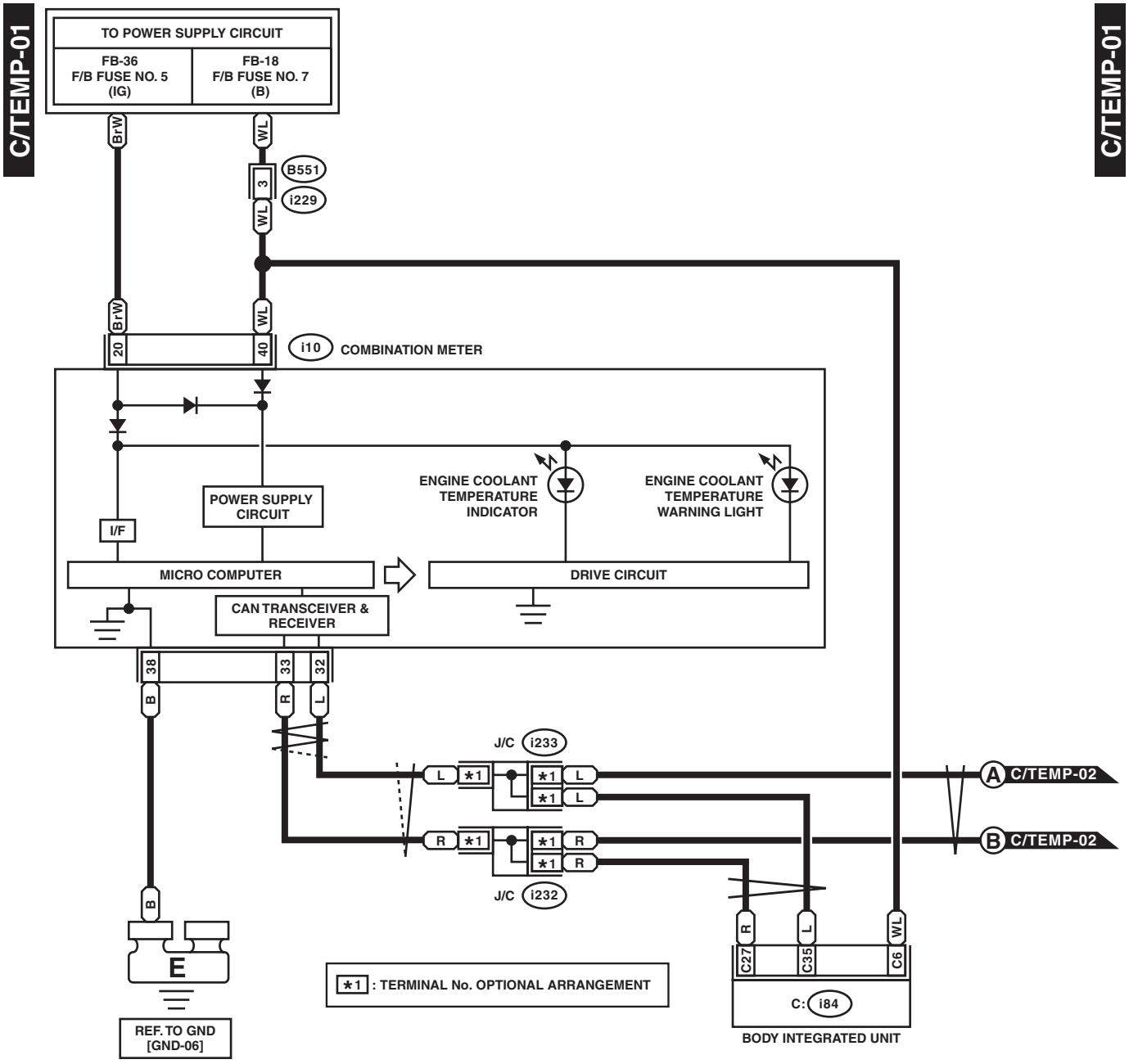

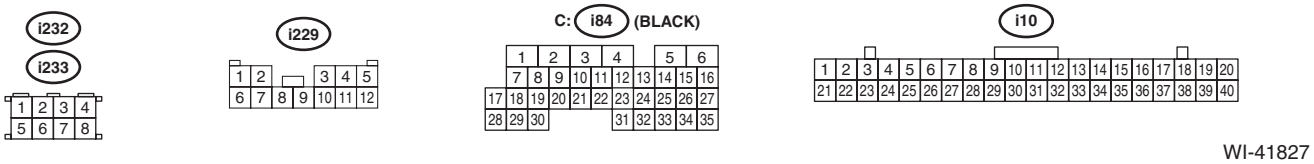

WI-41827

C/TEMP-02

C/TEMP-02

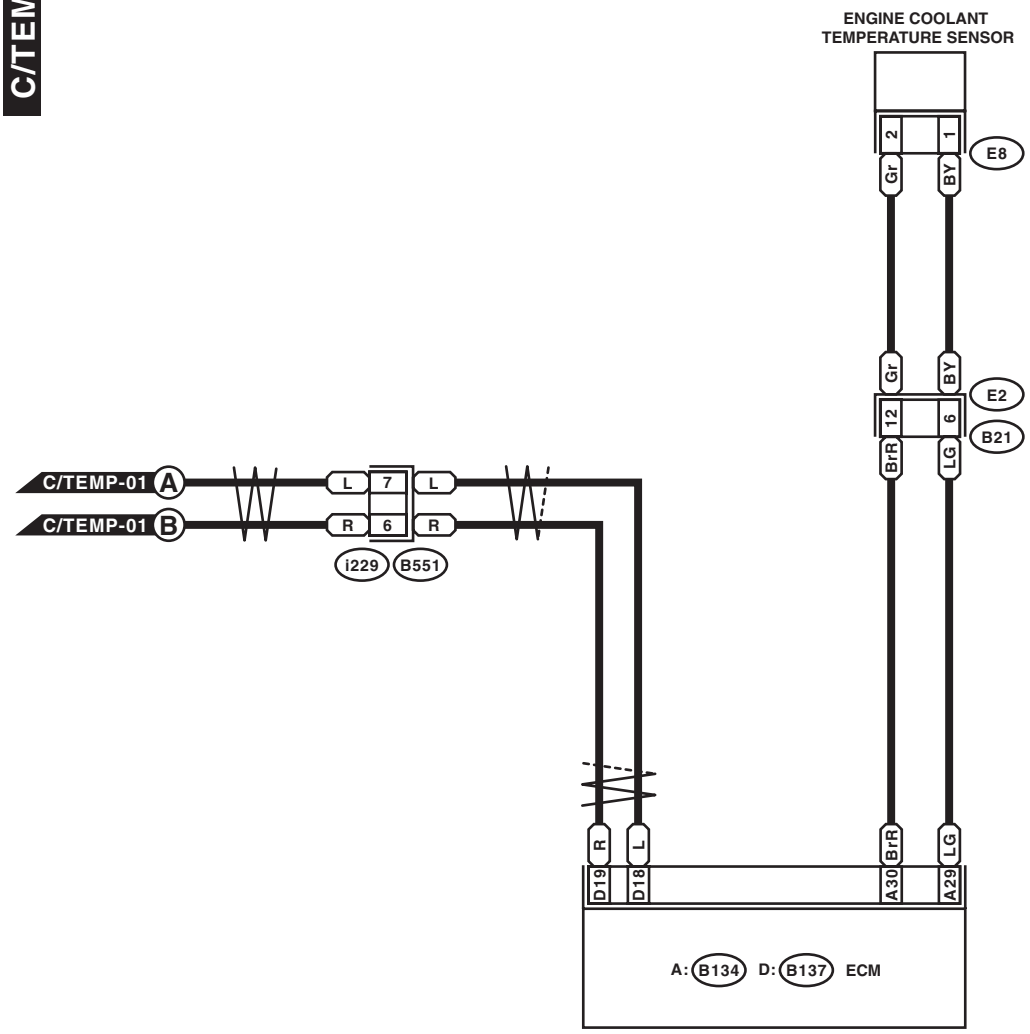

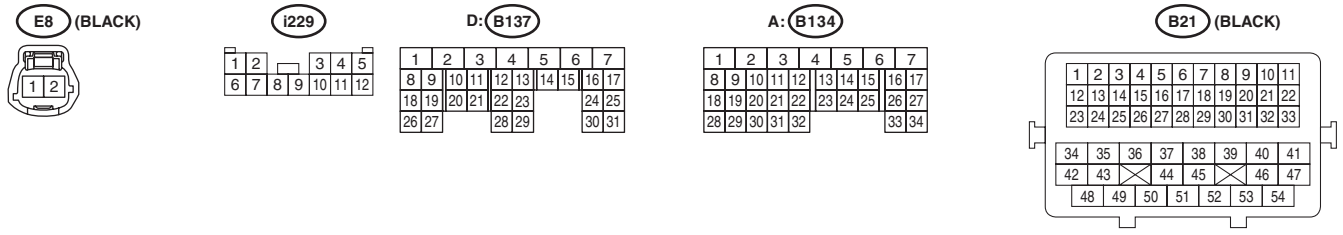

WI-41828

15.Cruise Control System

A: WIRING DIAGRAM

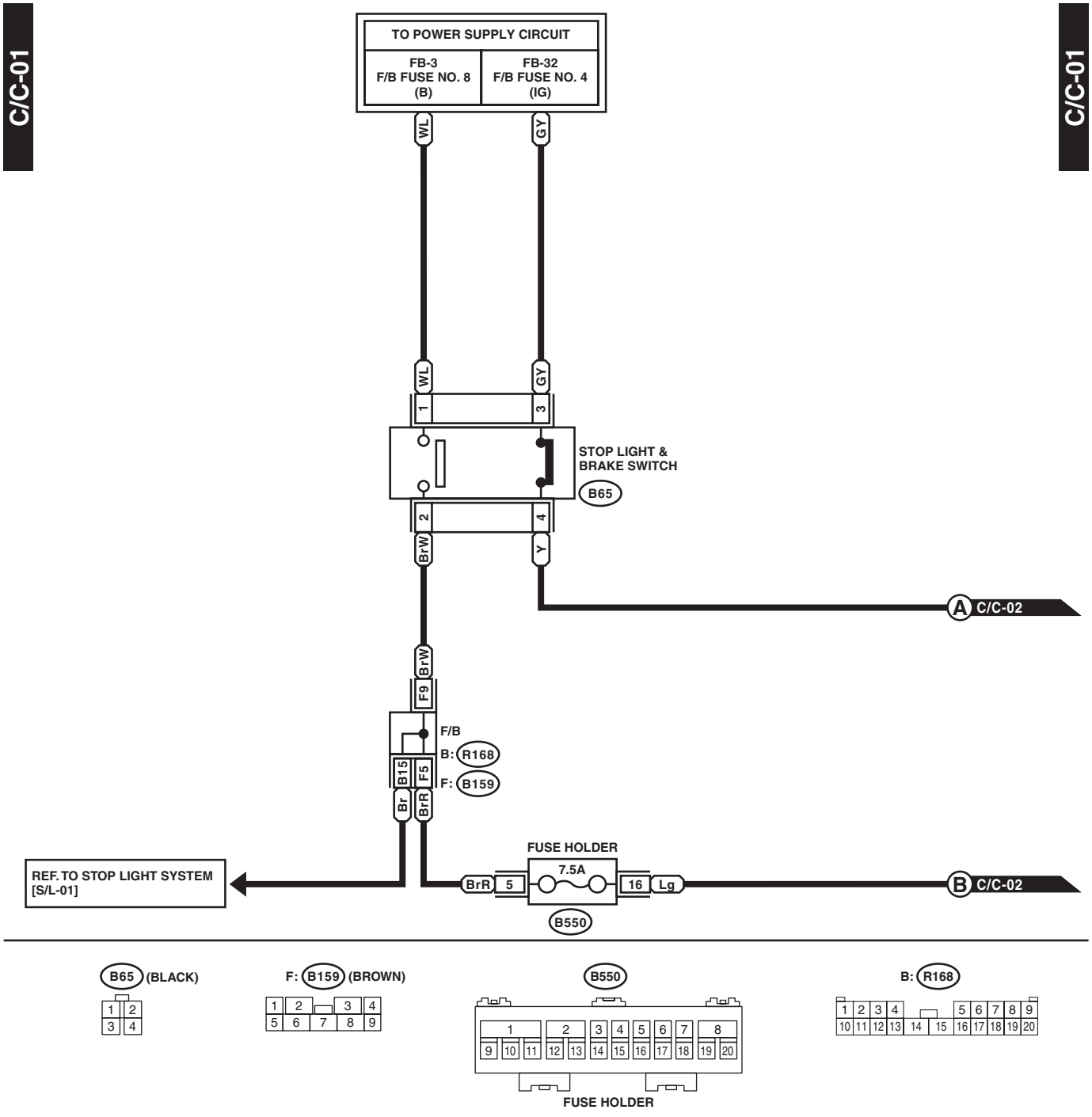

WI-41829

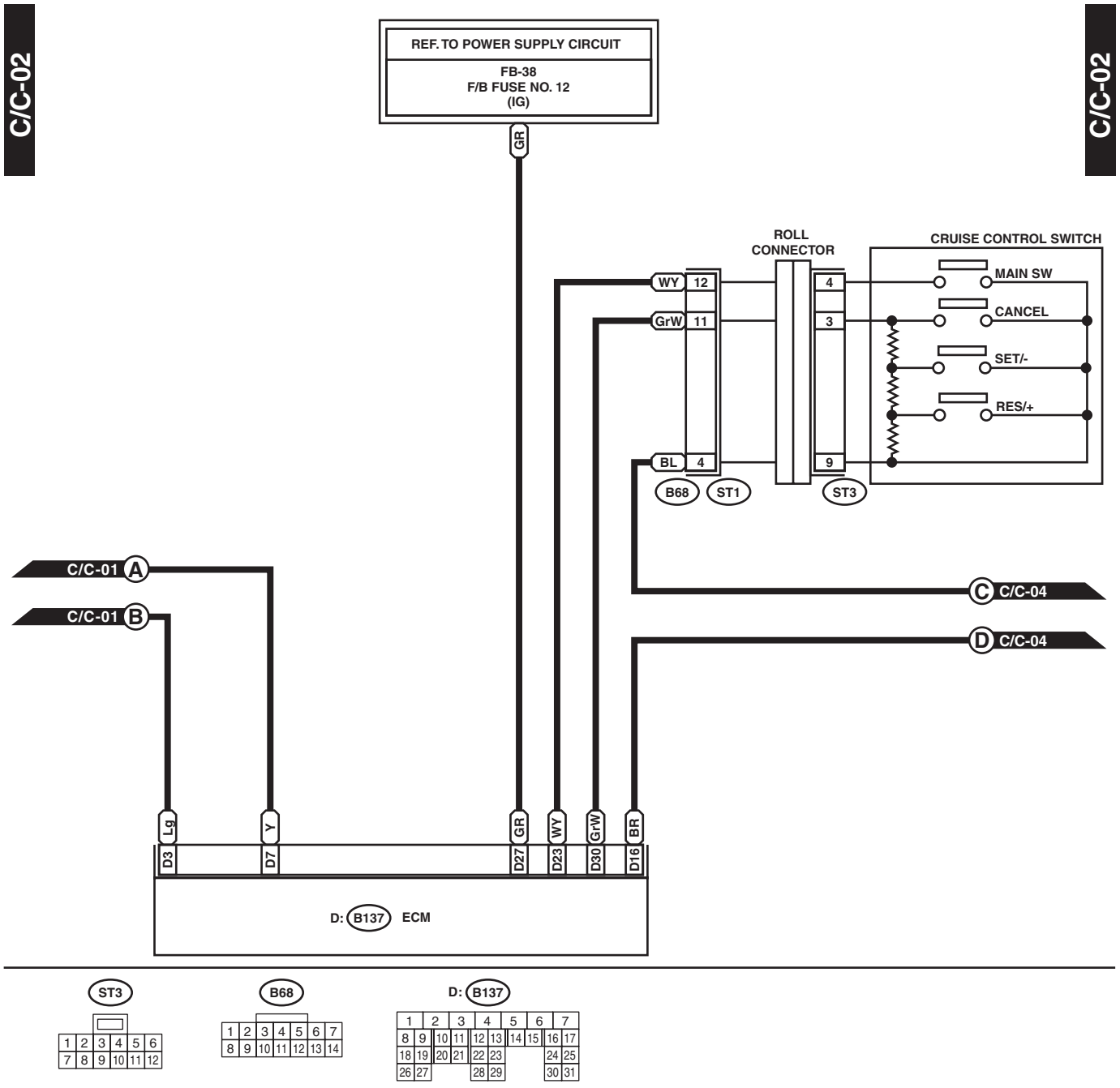
C/C-02
C/C-02
REF. TO POWER SUPPLY CIRCUIT
FB-38
F/B FUSE NO. 12
(IG)
GR
ROLL
CONNECTOR
CRUISE CONTROL SWITCH
WY
12
GrW
11
BL
4
4
3
9
MAIN SW
CANCEL
SET/-
RES/+
B68
ST1
ST3
C/C-01 A
C/C-01 B
C C/C-04
D C/C-04
Lg
Y
GR
WY
GrW
BR
D3
D7
D27
D23
D30
D16
D: B137 ECM

ST3
1 2 3 4 5 6
7 8 9 10 11 12
B68
1 2 3 4 5 6 7
8 9 10 11 12 13 14
D: B137
1 2 3 4 5 6 7
8 9 10 11 12 13 14 15 16 17
18 19 20 21 22 23 24 25
26 27 28 29 30 31

WI-48081

C/C-03

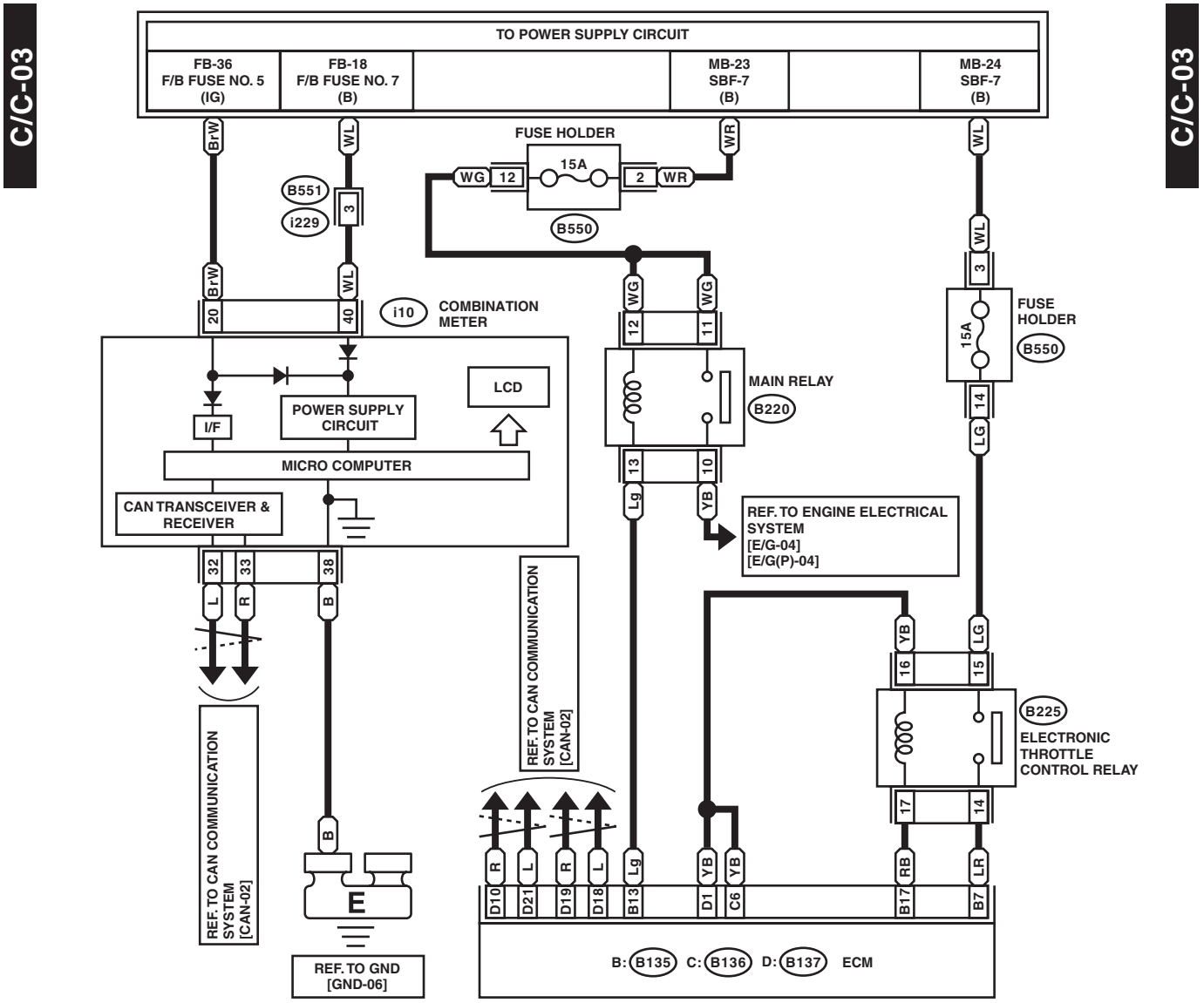

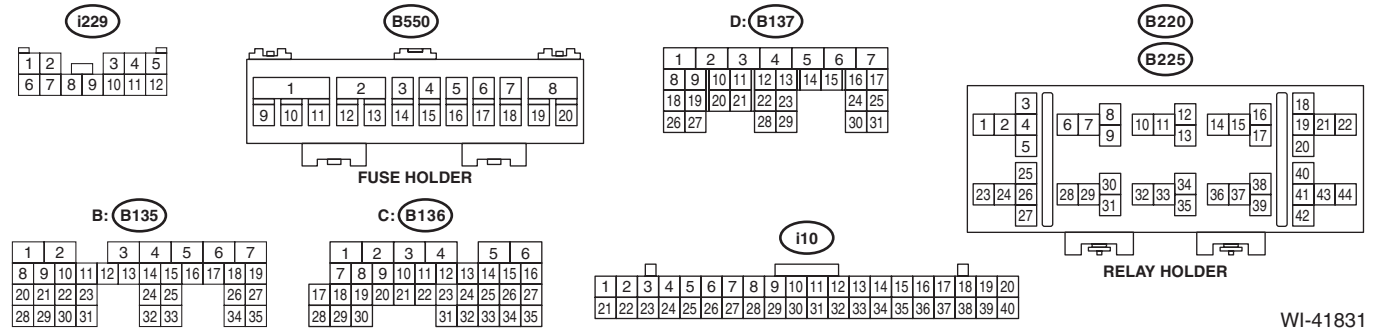

WI-41831

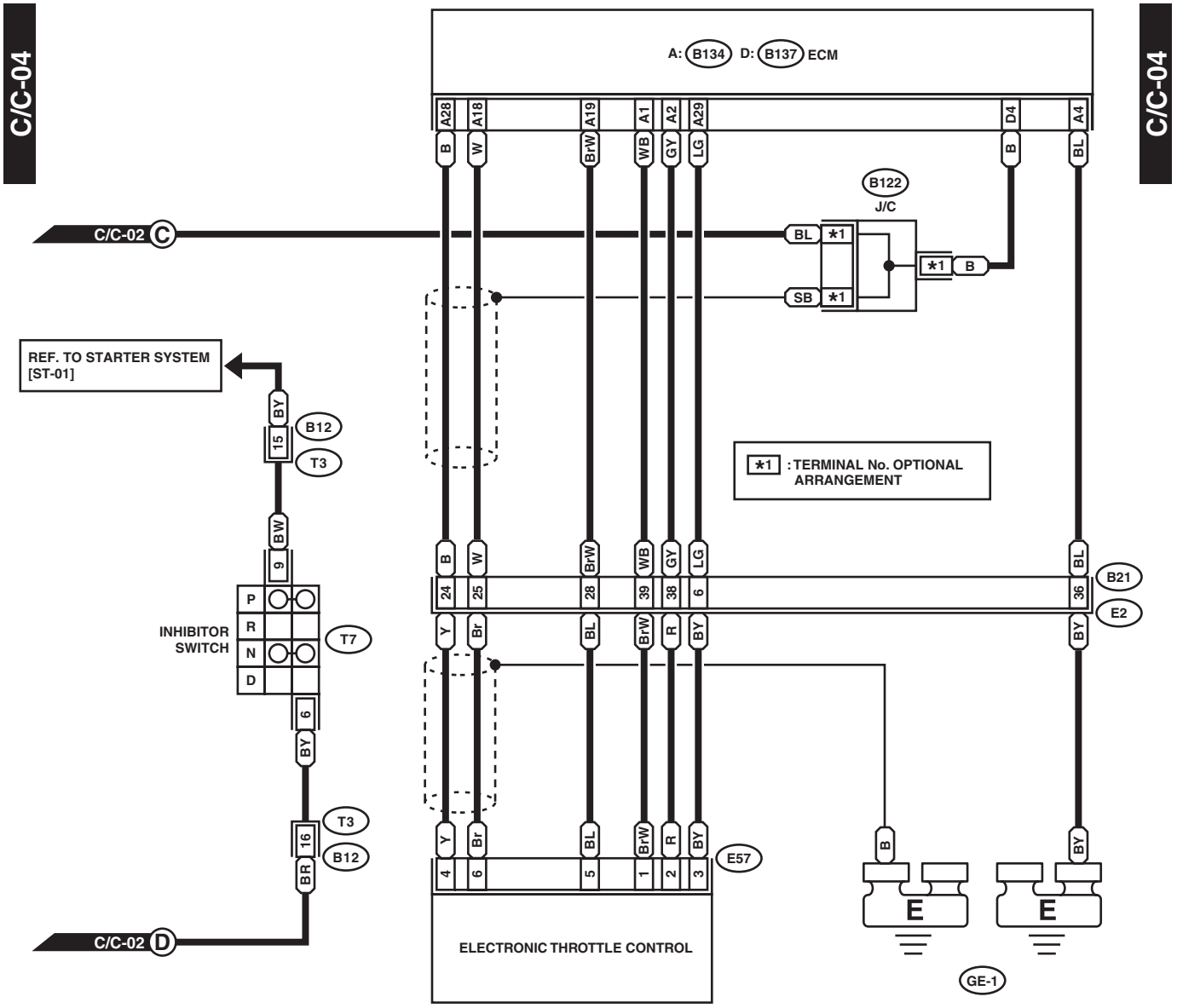
C/C-04
C/C-04
A: B134 D: B137 ECM
A26
A18
A19
A1
A2
A29
D4
A4
B
W
BrW
WB
GY
LG
B
BL
B122
J/C
C/C-02 C
BL
*1
*1
B
SB
*1
REF. TO STARTER SYSTEM [ST-01]
BY
15
B12
T3
*1 : TERMINAL No. OPTIONAL ARRANGEMENT
BW
9
P
R
N
D
INHIBITOR SWITCH
T7
6
BY
T3
16
B12
BR
C/C-02 D
B
W
BrW
WB
GY
LG
BL
B21
24
25
28
39
38
6
36
E2
Y
Br
BL
BrW
R
BY
BY
Y
Br
BL
BrW
R
BY
E57
4
6
5
1
2
3
ELECTRONIC THROTTLE CONTROL
B
BY
E
E
GE-1

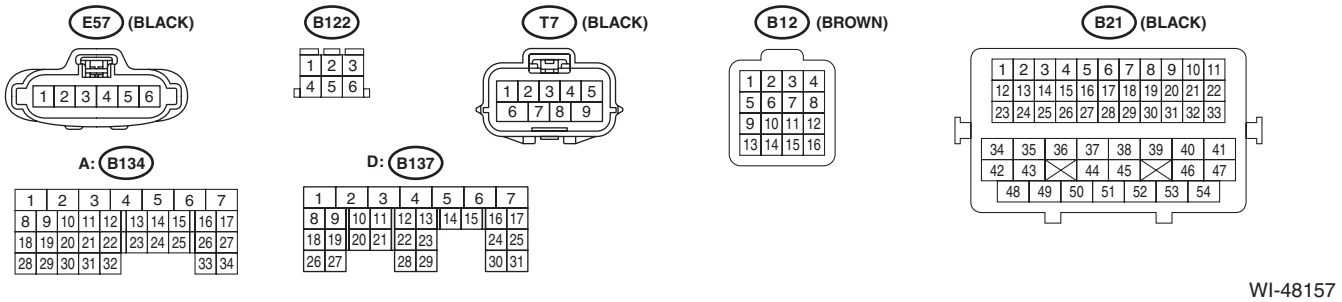
E57 (BLACK)
B122
T7 (BLACK)
B12 (BROWN)
B21 (BLACK)
A: B134
D: B137

WI-48157

16.CVT Control System

A: WIRING DIAGRAM

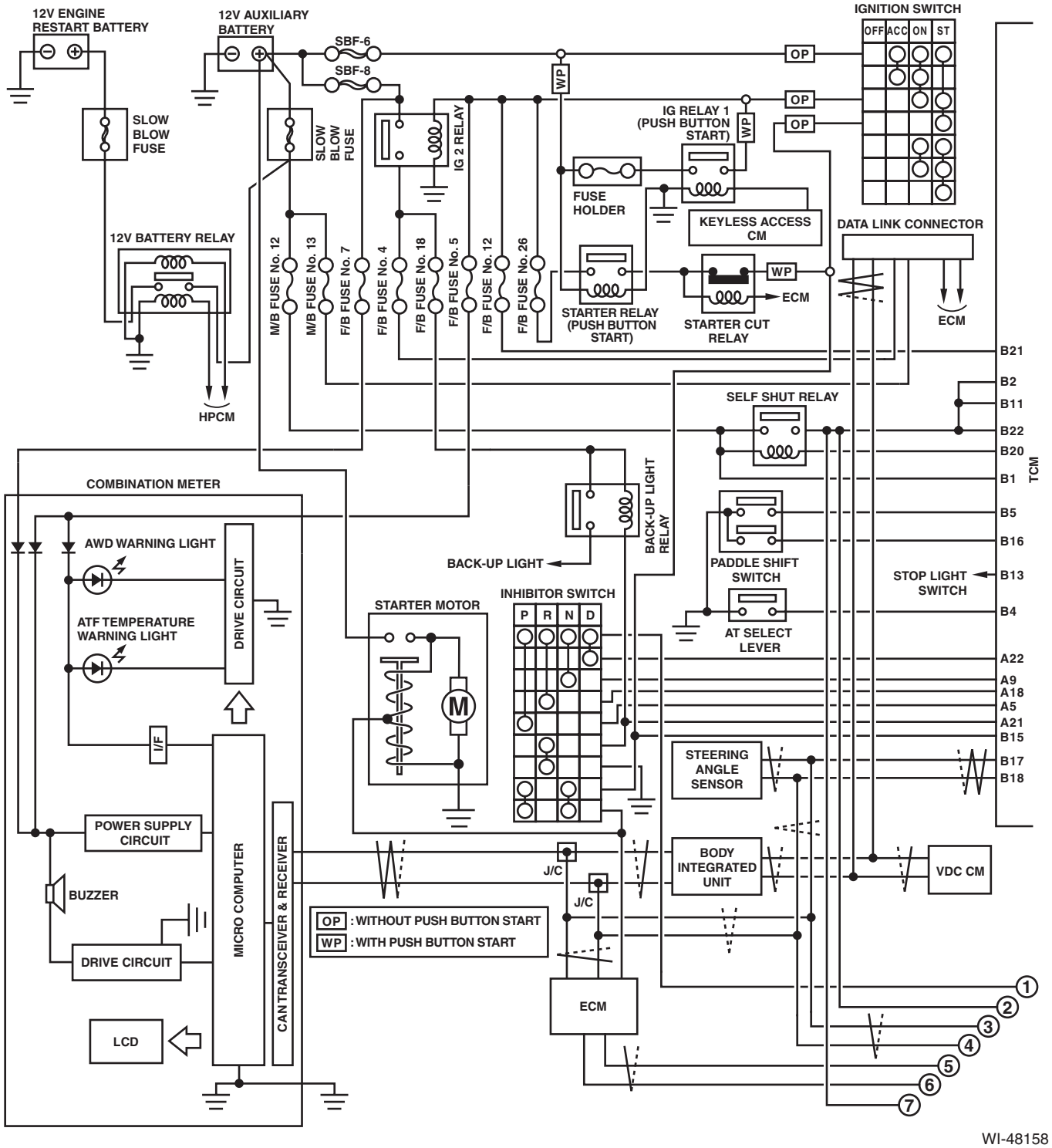

WI-48158

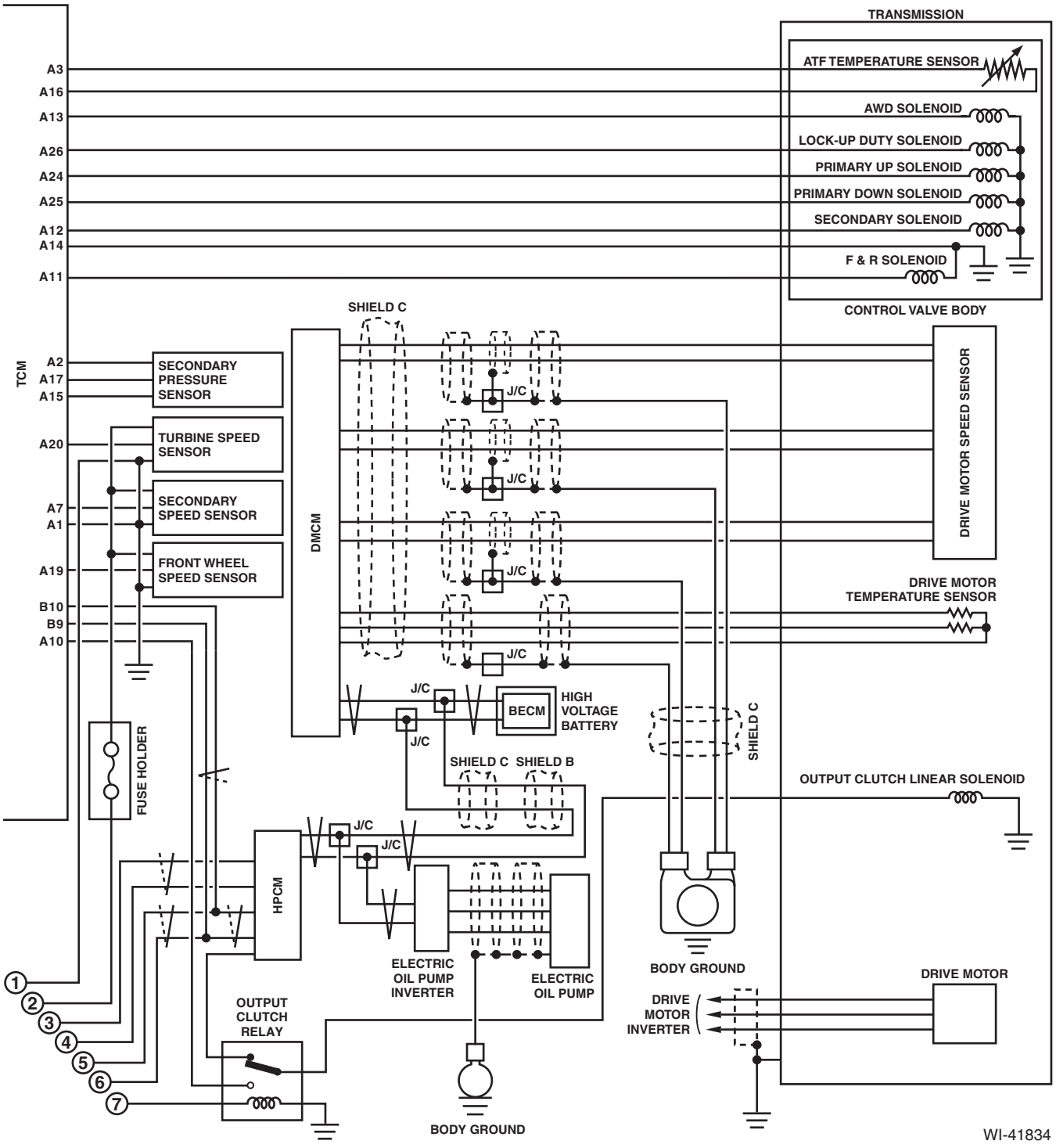
TRANSMISSION
ATF TEMPERATURE SENSOR
AWD SOLENOID
LOCK-UP DUTY SOLENOID
PRIMARY UP SOLENOID
PRIMARY DOWN SOLENOID
SECONDARY SOLENOID
F & R SOLENOID
CONTROL VALVE BODY
A3
A16
A13
A26
A24
A25
A12
A14
A11
TCM
A2
A17
A15
SECONDARY PRESSURE SENSOR
A20
TURBINE SPEED SENSOR
A7
A1
SECONDARY SPEED SENSOR
A19
FRONT WHEEL SPEED SENSOR
B10
B9
A10
SHIELD C
DMCM
J/C
DRIVE MOTOR SPEED SENSOR
DRIVE MOTOR TEMPERATURE SENSOR
BECM
HIGH VOLTAGE BATTERY
SHIELD C
SHIELD B
FUSE HOLDER
OUTPUT CLUTCH LINEAR SOLENOID
HPCM
ELECTRIC OIL PUMP INVERTER
ELECTRIC OIL PUMP
BODY GROUND
DRIVE MOTOR
DRIVE MOTOR INVERTER
OUTPUT CLUTCH RELAY
1
2
3
4
5
6
7
BODY GROUND
WI-41834

CVT-01

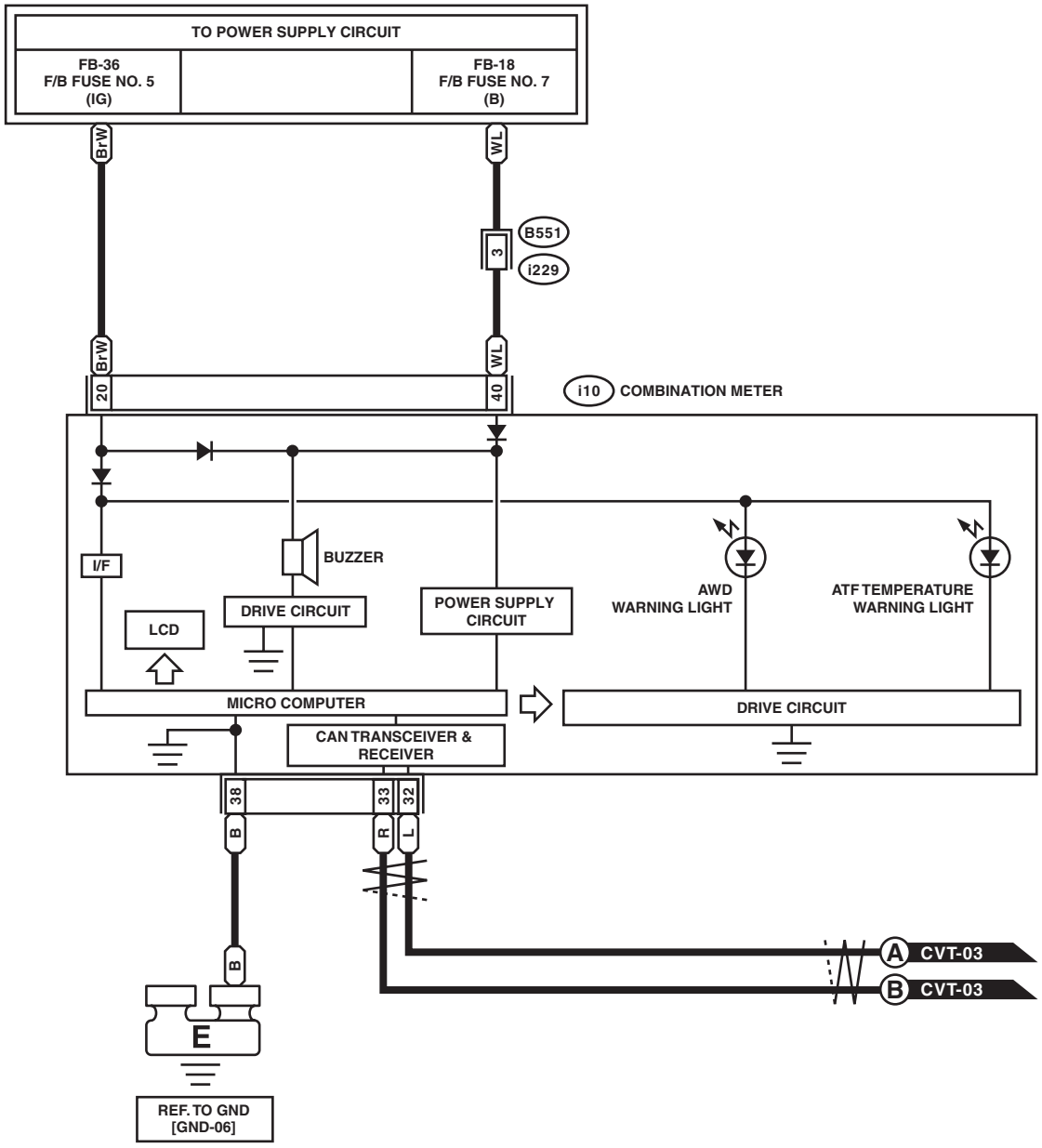

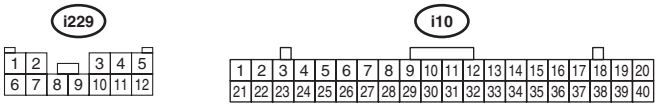

WI-41835

CVT-02

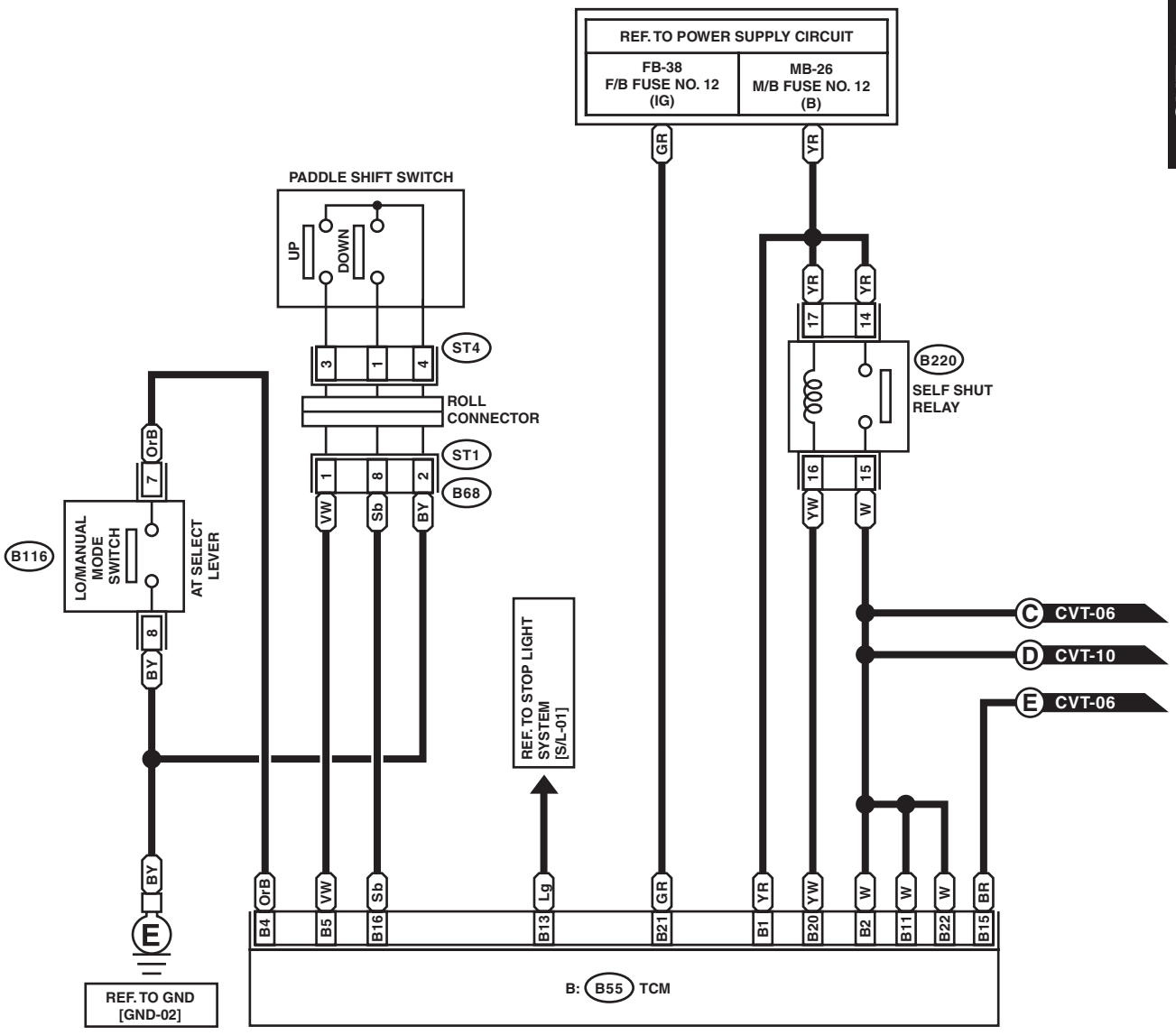

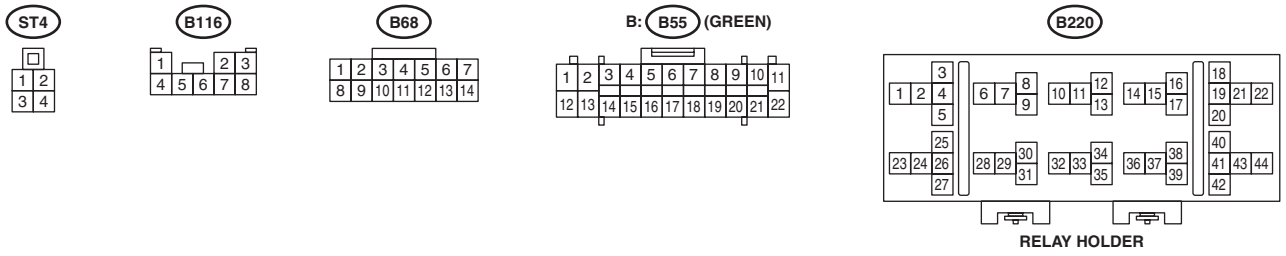

WI-48082

WIRING SYSTEM

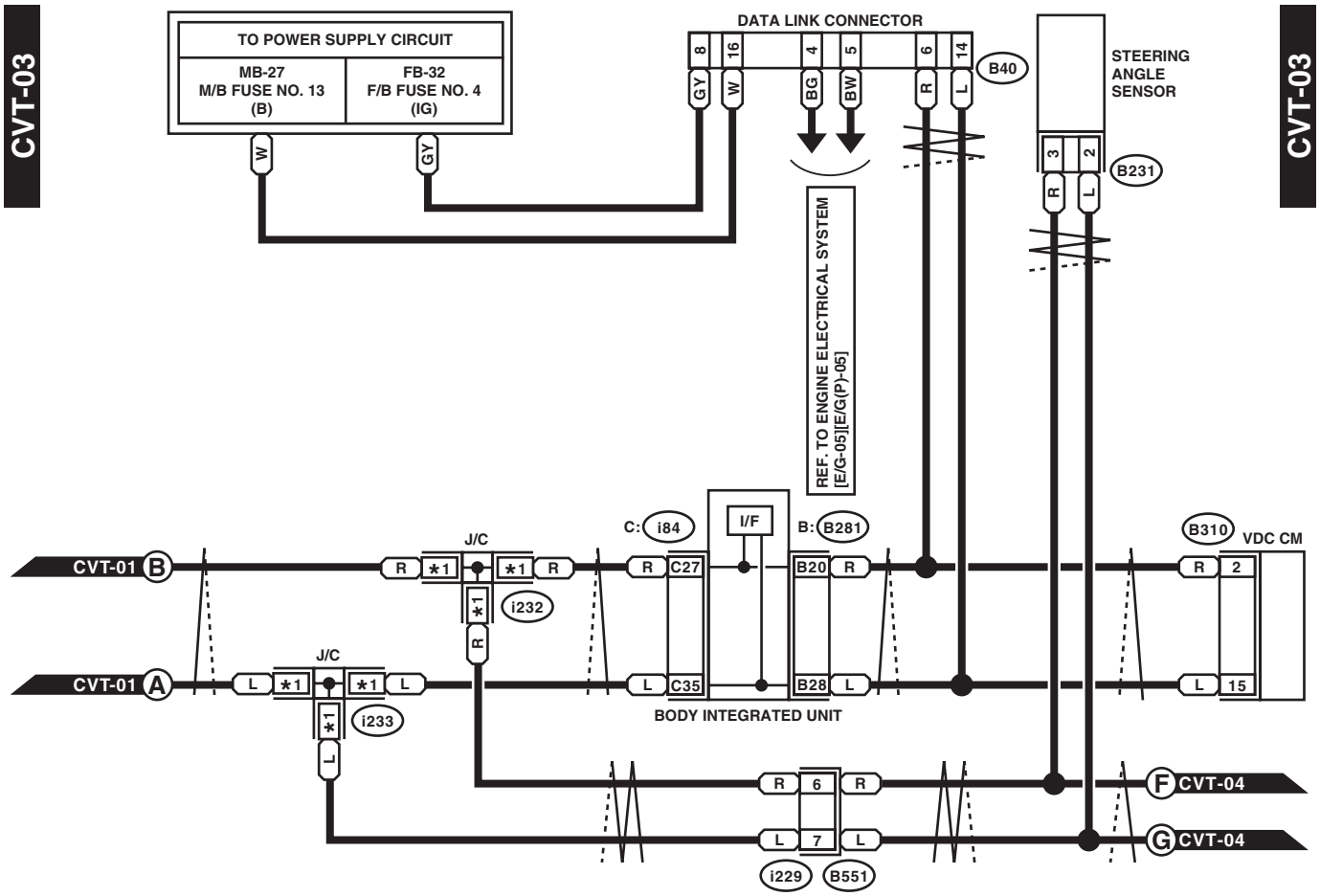

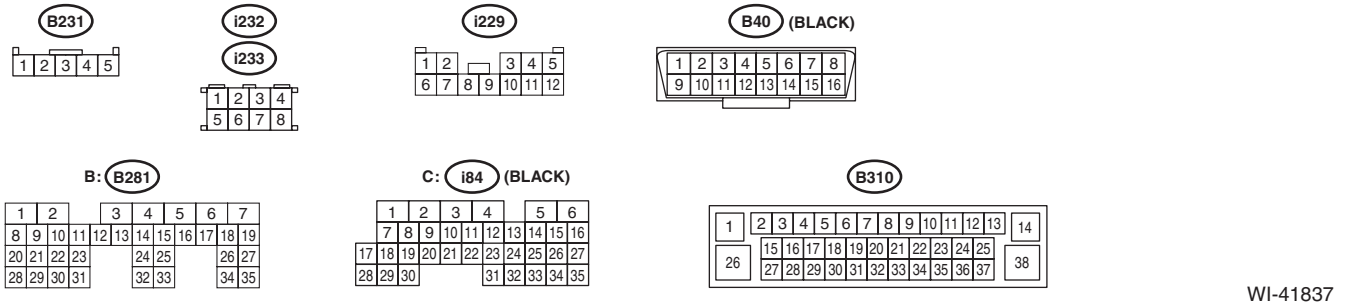

WI-41837

CVT-04

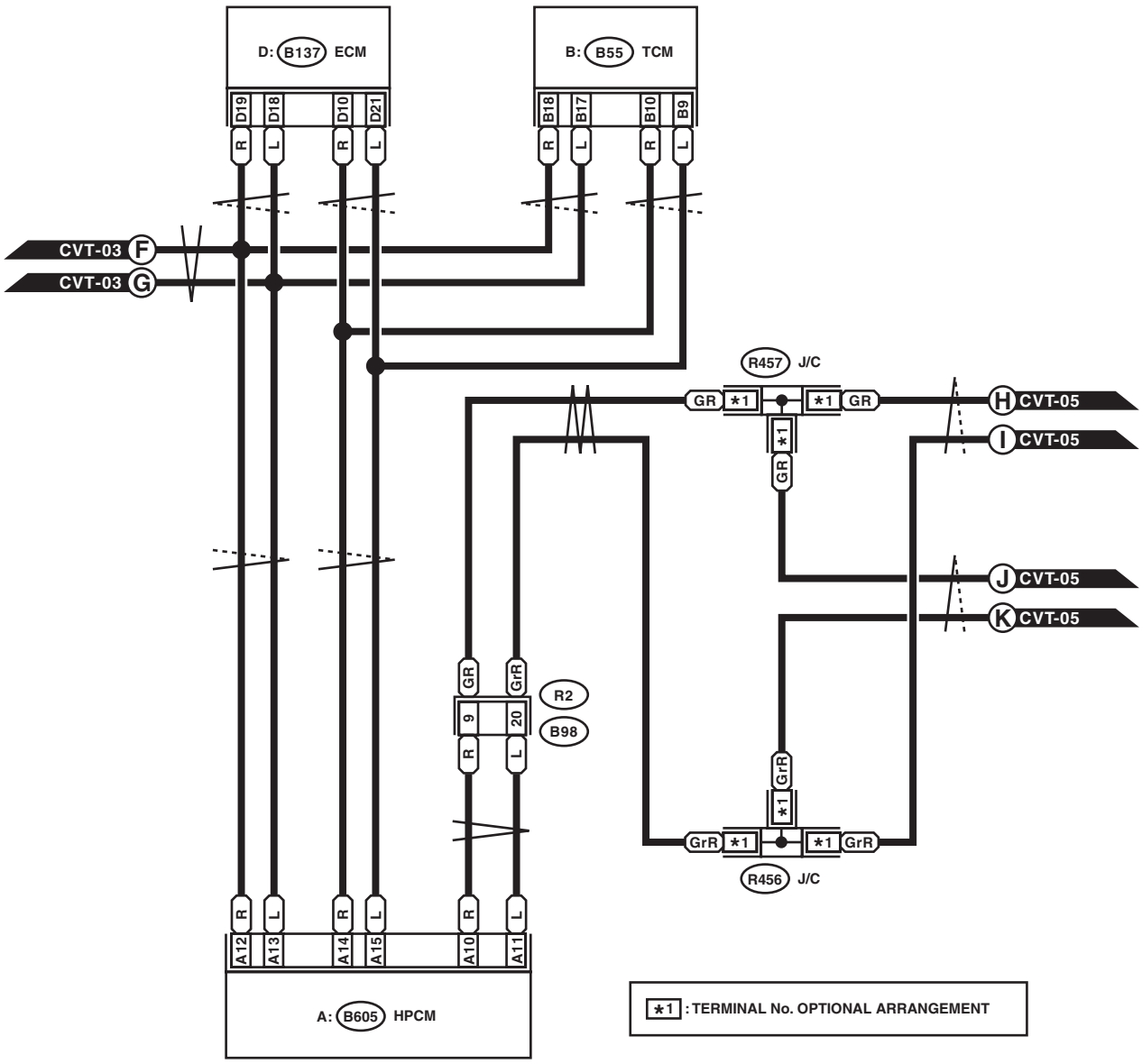

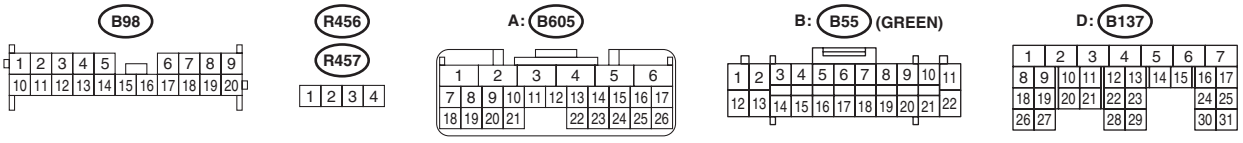

WI-48708

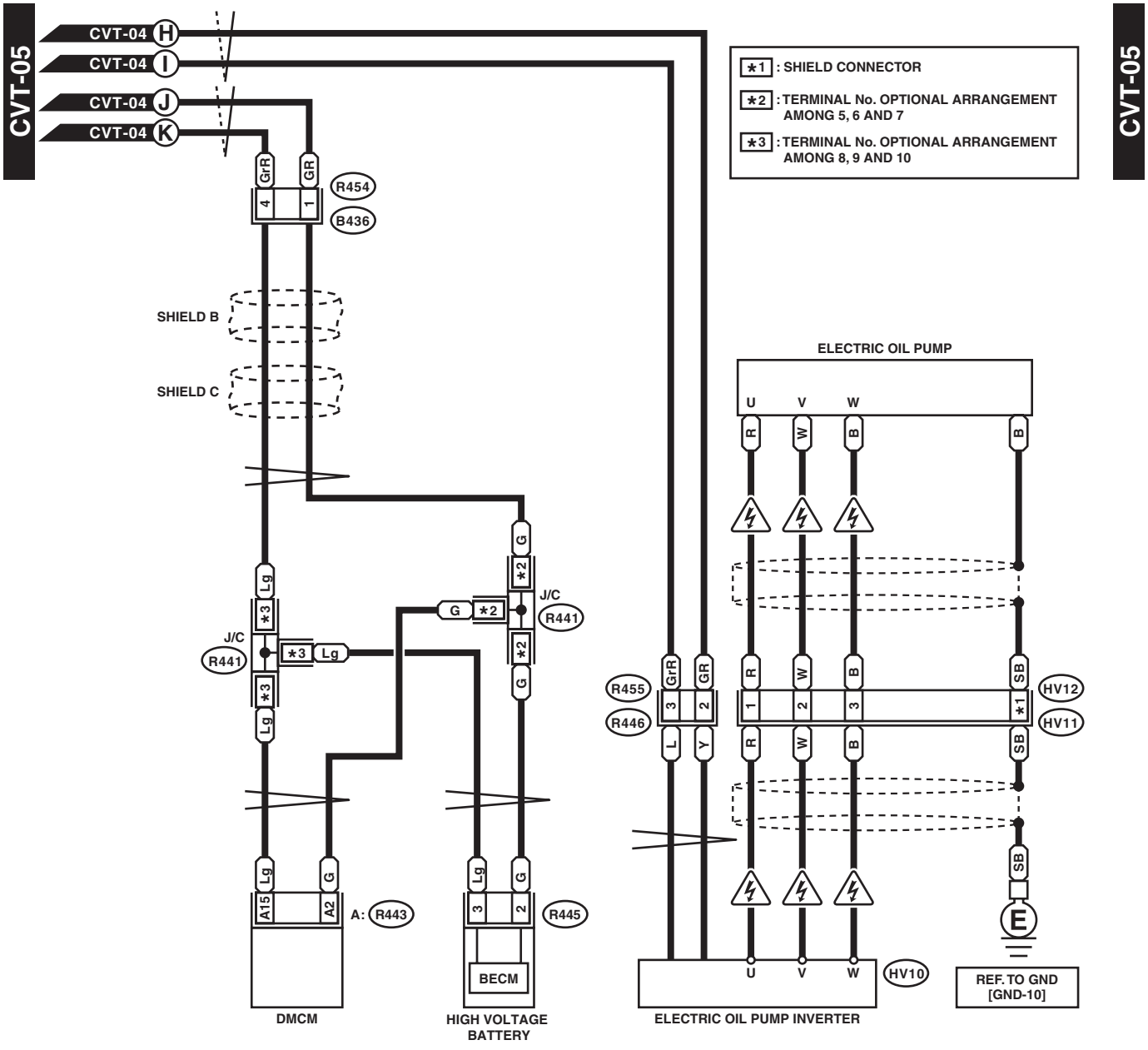
CVT-05
CVT-04 H
CVT-04 I
CVT-04 J
CVT-04 K
*1 : SHIELD CONNECTOR
*2 : TERMINAL No. OPTIONAL ARRANGEMENT AMONG 5, 6 AND 7
*3 : TERMINAL No. OPTIONAL ARRANGEMENT AMONG 8, 9 AND 10
R454
B436
SHIELD B
SHIELD C
J/C
R441
R455
R446
ELECTRIC OIL PUMP
HV12
HV11
HV10
A: R443
R445
DMCM
HIGH VOLTAGE BATTERY
BECM
ELECTRIC OIL PUMP INVERTER
REF. TO GND [GND-10]

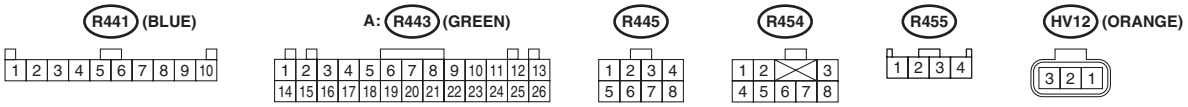
R441 (BLUE)
A: R443 (GREEN)
R445
R454
R455
HV12 (ORANGE)

WI-41839

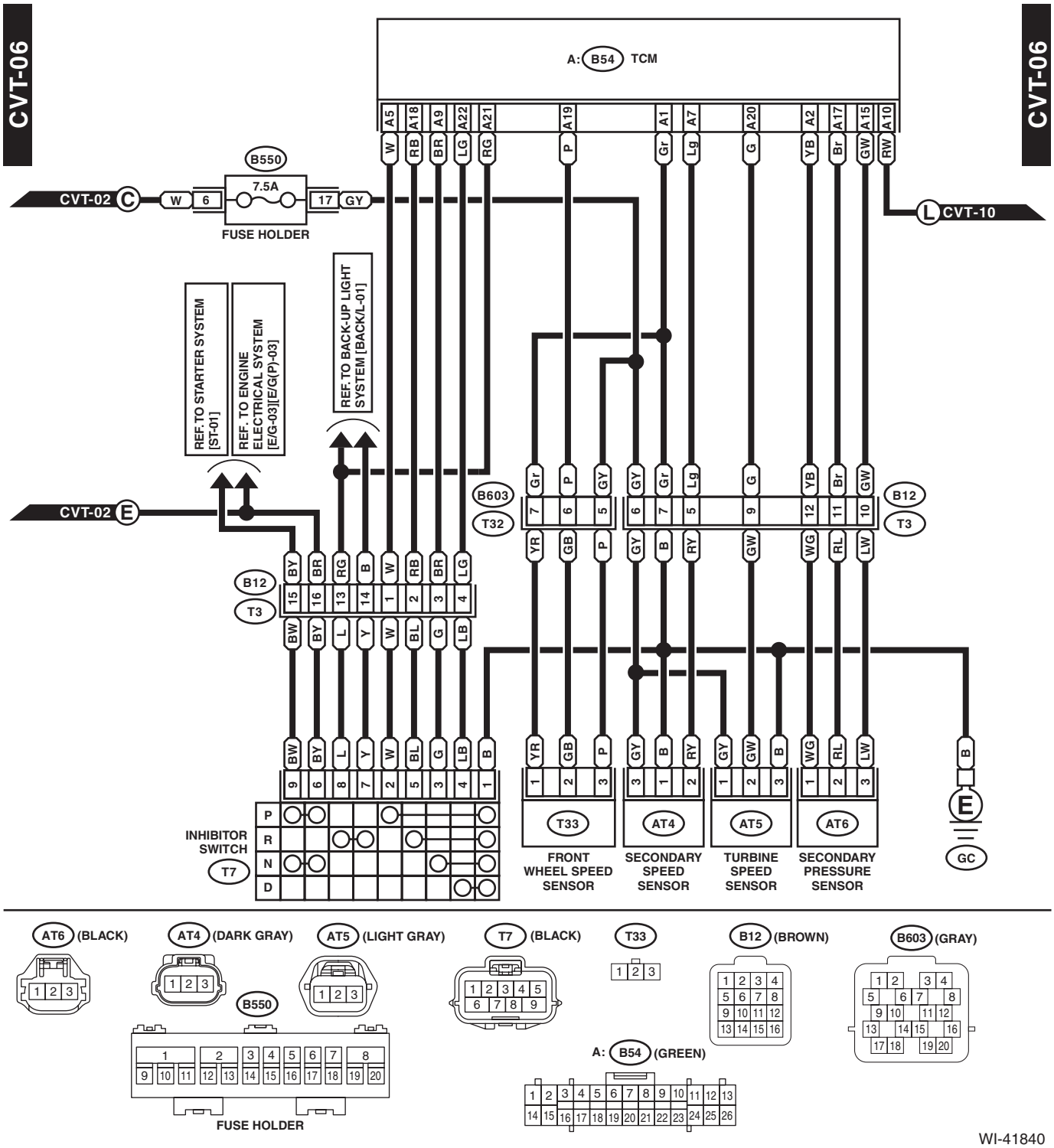
CVT-06
CVT-06
A: B54 TCM
A5 A18 A9 A22 A21 A19 A1 A7 A20 A2 A17 A15 A10
W RB BR LG RG P Gr Lg G YB Br GW RW
B550
7.5A
CVT-02 C
W 6 17 GY
FUSE HOLDER
L CVT-10
REF. TO STARTER SYSTEM [ST-01]
REF. TO ENGINE ELECTRICAL SYSTEM [E/G-03][E/G(P)-03]
REF. TO BACK-UP LIGHT SYSTEM [BACK/L-01]
CVT-02 E
B603
T32
B12
T3
Gr P GY GY Gr Lg G YB Br GW
7 6 5 6 7 5 9 12 11 10
YR GB P GY B RY GW WG RL LW
BY BR RG B W RB BR LG
15 16 13 14 1 2 3 4
BW BY L Y W BL G LB
BW BY L Y W BL G LB B
9 6 8 7 2 5 3 4 1
YR GB P GY B RY GY GW B WG RL LW B
1 2 3 3 1 2 1 2 3 1 2 3
P R N D
INHIBITOR SWITCH
T7
T33
AT4
AT5
AT6
E
GC
FRONT WHEEL SPEED SENSOR
SECONDARY SPEED SENSOR
TURBINE SPEED SENSOR
SECONDARY PRESSURE SENSOR
AT6 (BLACK)
AT4 (DARK GRAY)
AT5 (LIGHT GRAY)
T7 (BLACK)
T33
B12 (BROWN)
B603 (GRAY)
B550
FUSE HOLDER
A: B54 (GREEN)

WI-41840

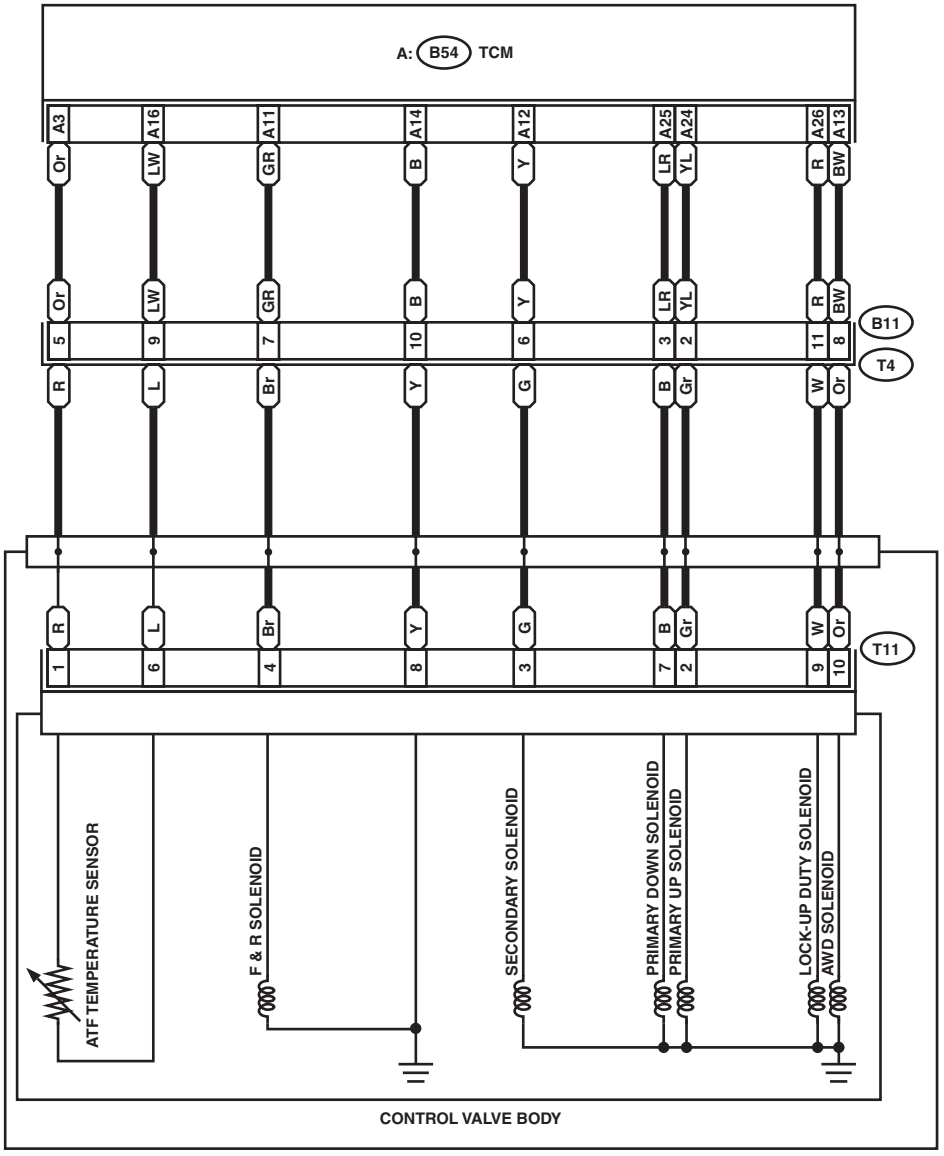
A: B54 TCM
A3
A16
A11
A14
A12
A25
A24
A26
A13
Or
LW
GR
B
Y
LR
YL
R
BW
5
9
7
10
6
3
2
11
8
B11
T4
R
L
Br
Y
G
B
Gr
W
Or
1
6
4
8
3
7
2
9
10
T11
ATF TEMPERATURE SENSOR
F & R SOLENOID
SECONDARY SOLENOID
PRIMARY DOWN SOLENOID
PRIMARY UP SOLENOID
LOCK-UP DUTY SOLENOID
AWD SOLENOID
CONTROL VALVE BODY
TRANSMISSION

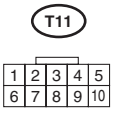
T11
1 2 3 4 5
6 7 8 9 10

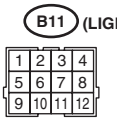
B11 (LIGHT GRAY)
1 2 3 4
5 6 7 8
9 10 11 12

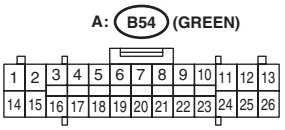
A: B54 (GREEN)
1 2 3 4 5 6 7 8 9 10 11 12 13
14 15 16 17 18 19 20 21 22 23 24 25 26

WI-41841

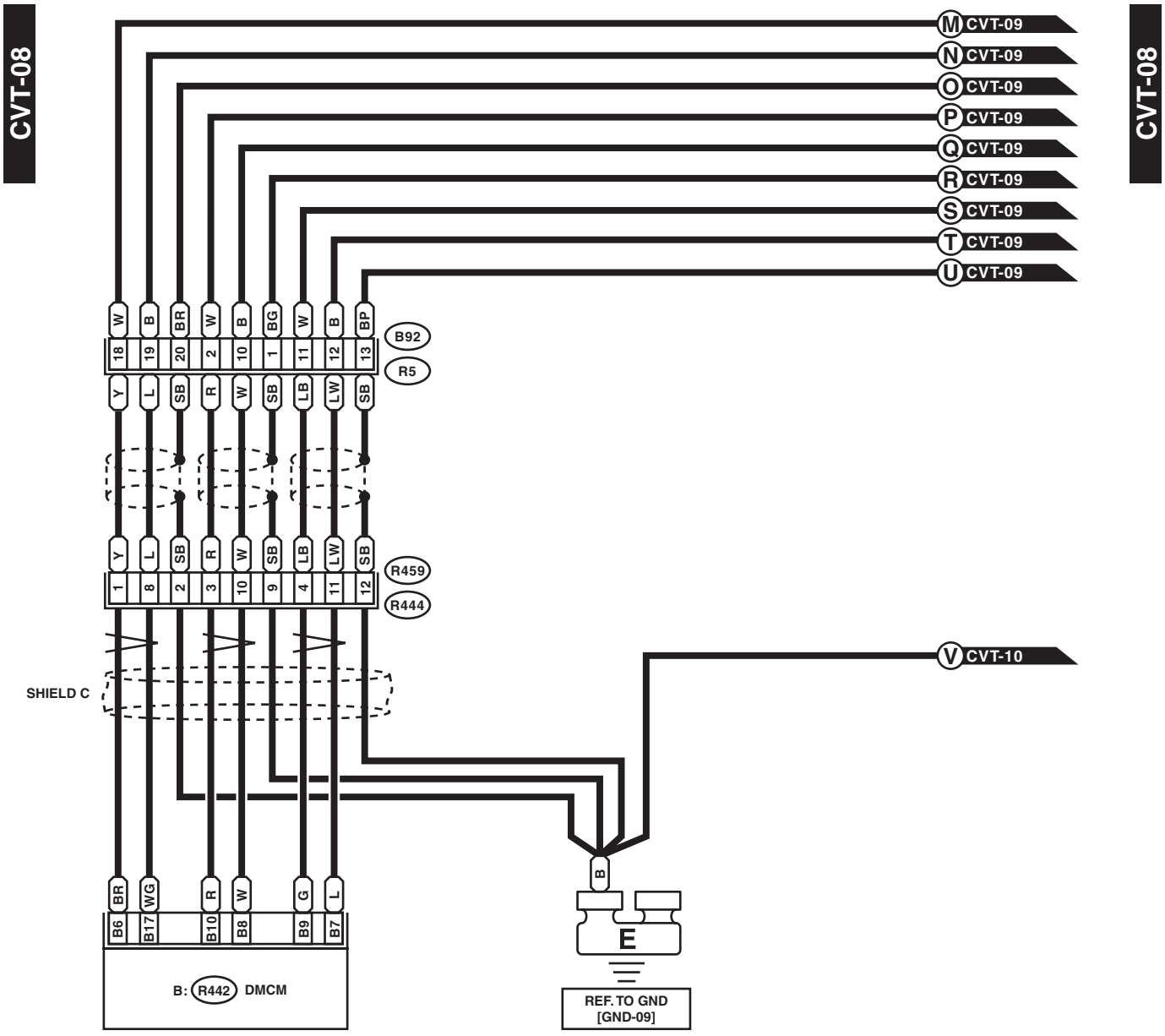
CVT-08
CVT-08
M CVT-09
N CVT-09
O CVT-09
P CVT-09
Q CVT-09
R CVT-09
S CVT-09
T CVT-09
U CVT-09
B92
R5
R459
R444
V CVT-10
SHIELD C
B
E
REF. TO GND
[GND-09]
B: R442 DMCM

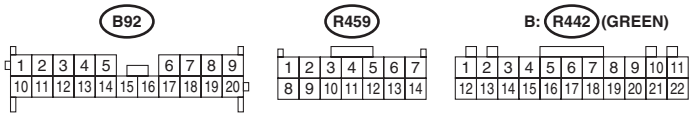
B92
R459
B: R442 (GREEN)

WI-41842

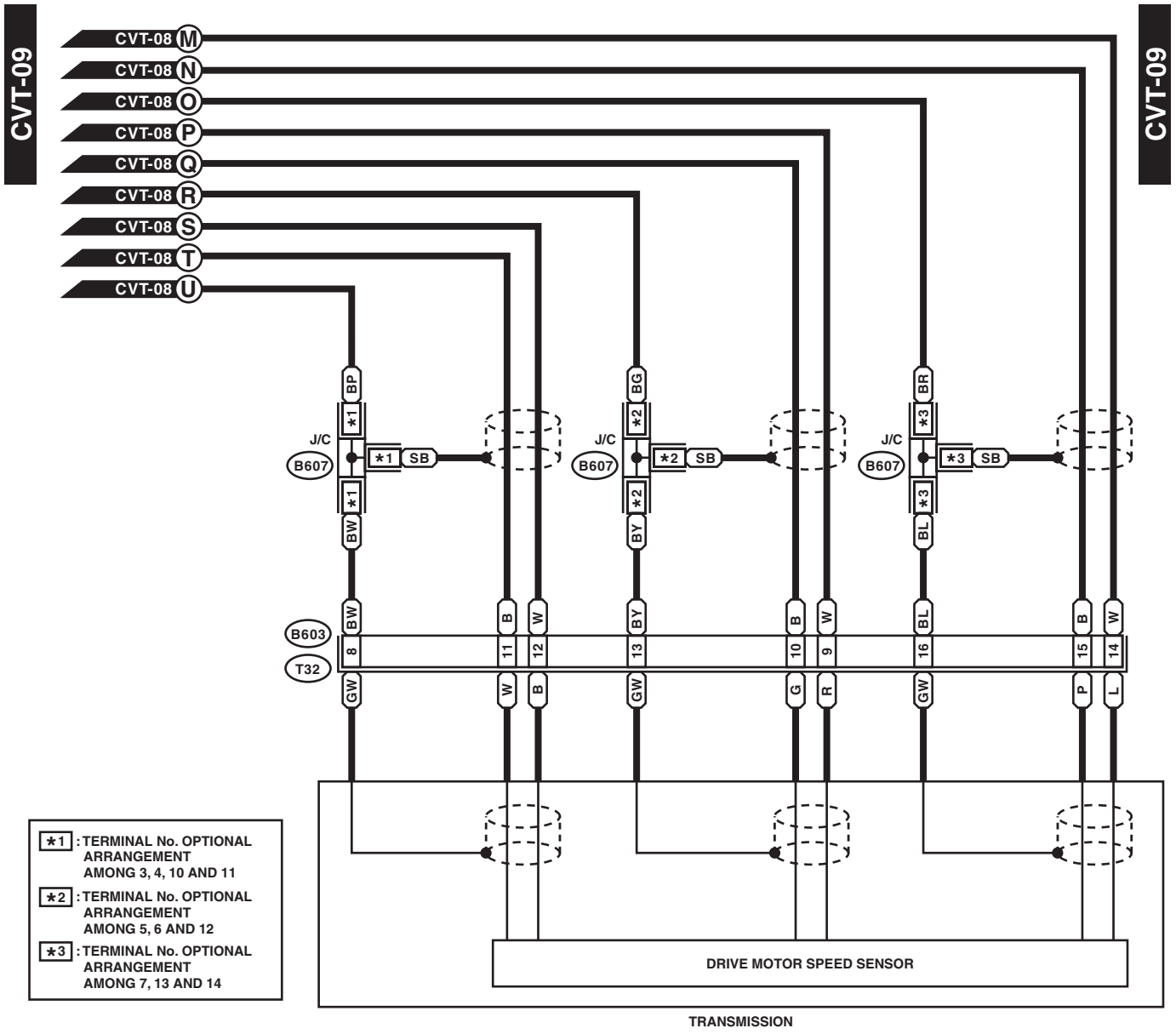
CVT-09
CVT-09
CVT-08 M
CVT-08 N
CVT-08 O
CVT-08 P
CVT-08 Q
CVT-08 R
CVT-08 S
CVT-08 T
CVT-08 U
J/C
B607
J/C
B607
J/C
B607
B603
T32
DRIVE MOTOR SPEED SENSOR
TRANSMISSION
*1 : TERMINAL No. OPTIONAL ARRANGEMENT AMONG 3, 4, 10 AND 11
*2 : TERMINAL No. OPTIONAL ARRANGEMENT AMONG 5, 6 AND 12
*3 : TERMINAL No. OPTIONAL ARRANGEMENT AMONG 7, 13 AND 14

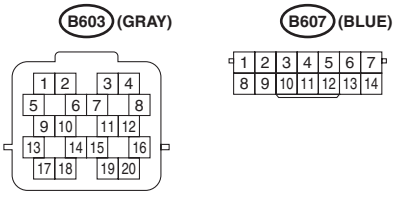
B603 (GRAY)
B607 (BLUE)

WI-41843

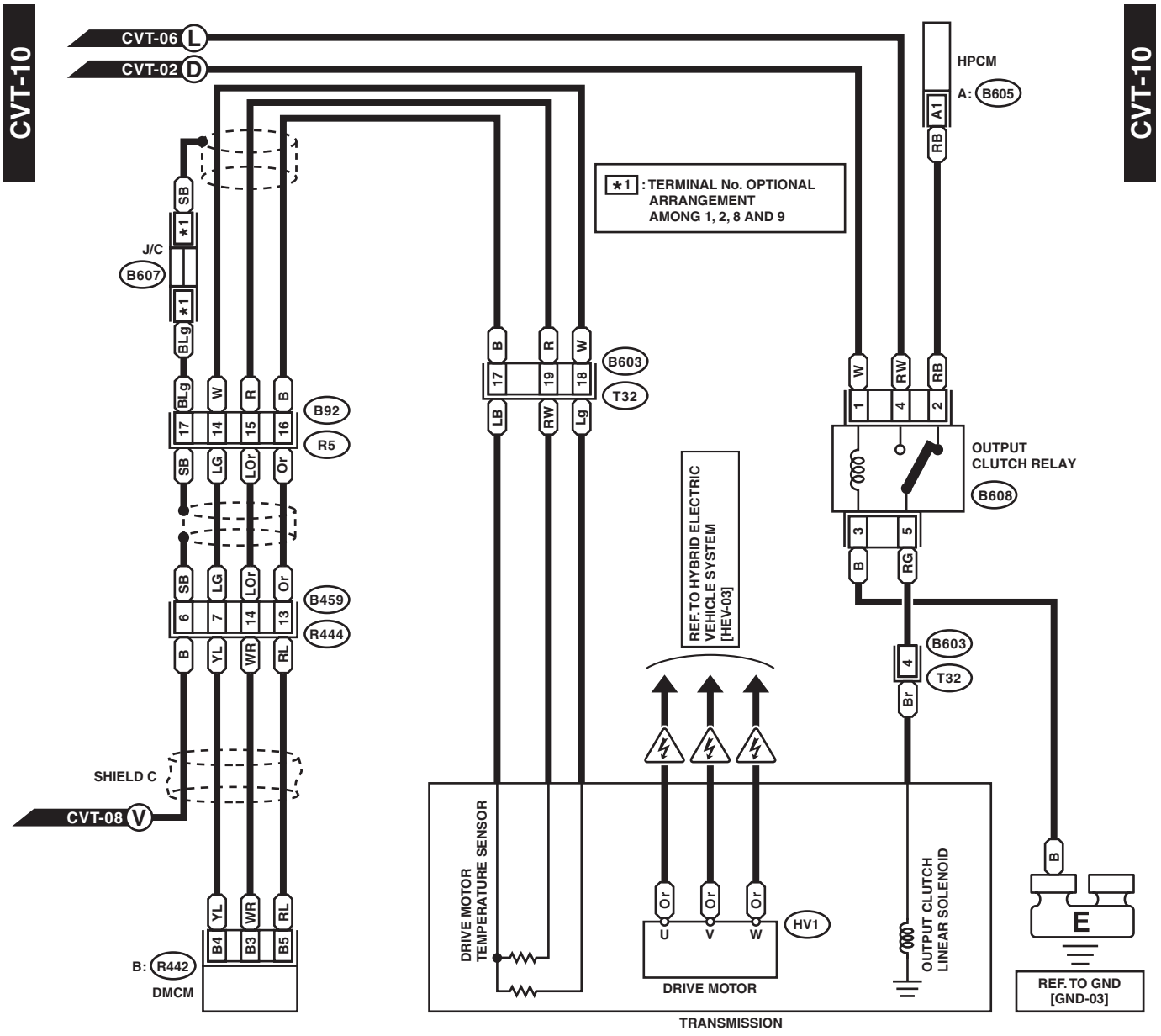
CVT-10
CVT-06 L
CVT-02 D
HPCM
A: B605
A1
RB
*1 : TERMINAL No. OPTIONAL ARRANGEMENT AMONG 1, 2, 8 AND 9
J/C
B607
SB
BLg
W
R
B
B92
R5
17
14
15
16
LG
LOr
Or
6
7
13
B459
R444
YL
WR
RL
B4
B3
B5
B: R442
DMCM
SHIELD C
CVT-08 V
B603
T32
LB
RW
Lg
19
18
REF. TO HYBRID ELECTRIC VEHICLE SYSTEM [HEV-03]
OUTPUT CLUTCH RELAY
B608
RG
Br
DRIVE MOTOR TEMPERATURE SENSOR
U
V
W
HV1
DRIVE MOTOR
OUTPUT CLUTCH LINEAR SOLENOID
E
REF. TO GND [GND-03]
TRANSMISSION

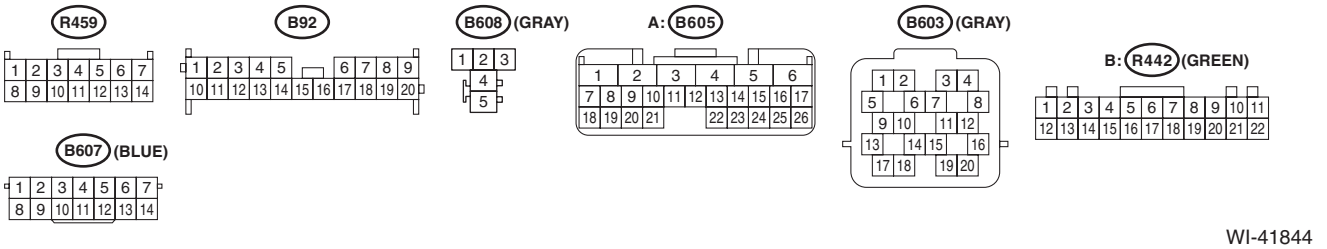
R459
B92
B608 (GRAY)
A: B605
B603 (GRAY)
B: R442 (GREEN)
B607 (BLUE)

WI-41844

17.Electric Power Steering System

A: WIRING DIAGRAM

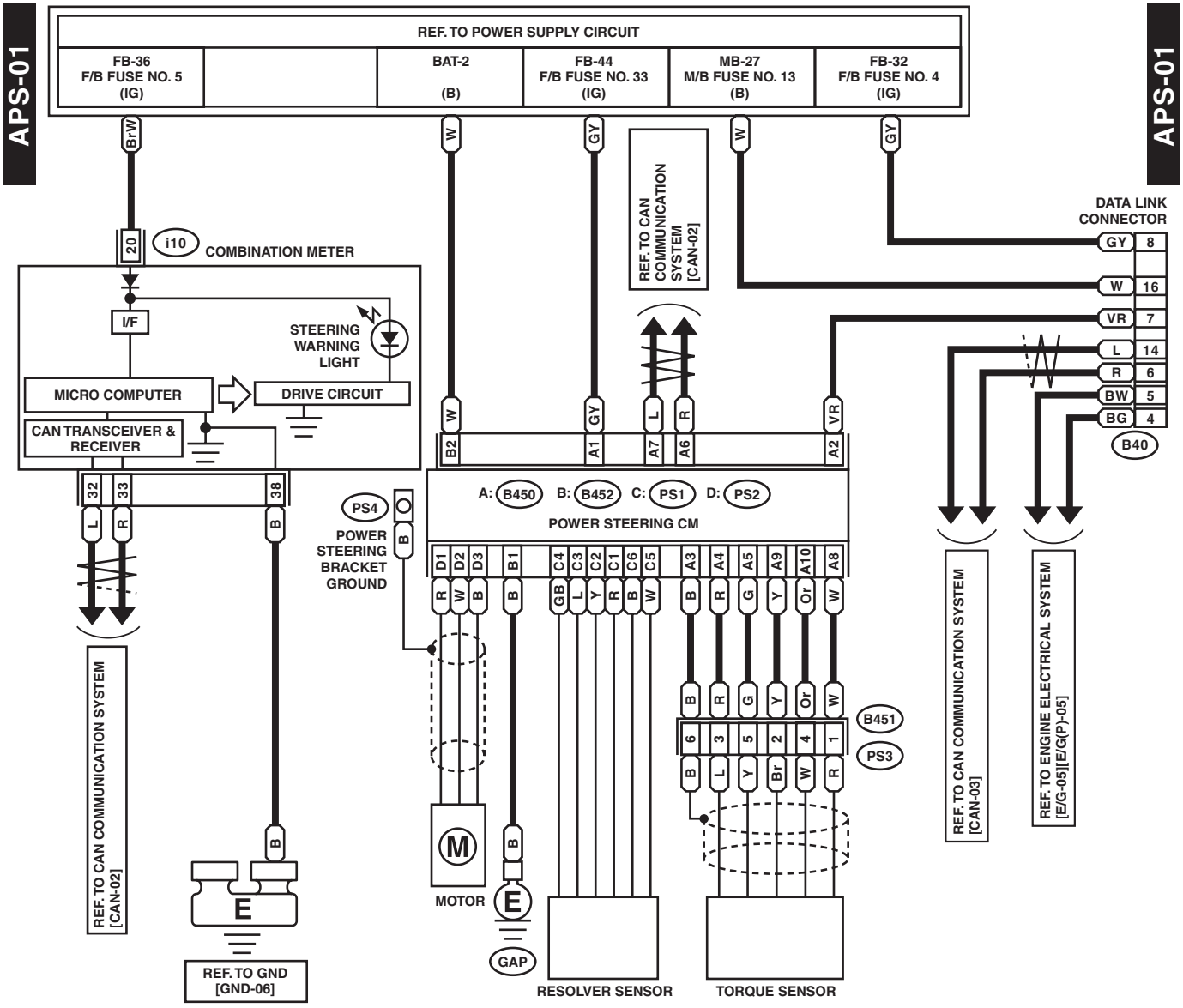

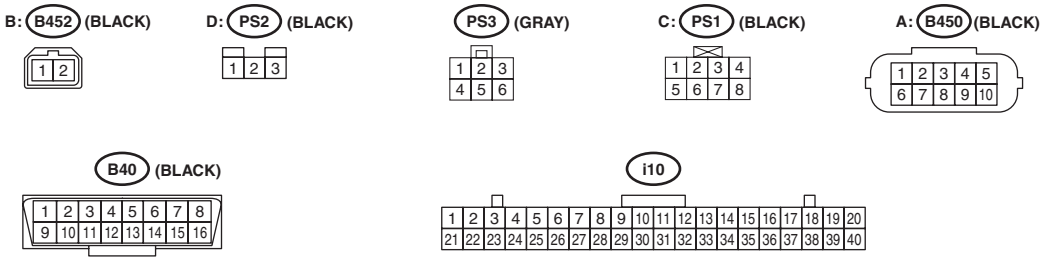

WI-48709

18.Engine Electrical System

A: WIRING DIAGRAM

1. WITHOUT PUSH BUTTON START

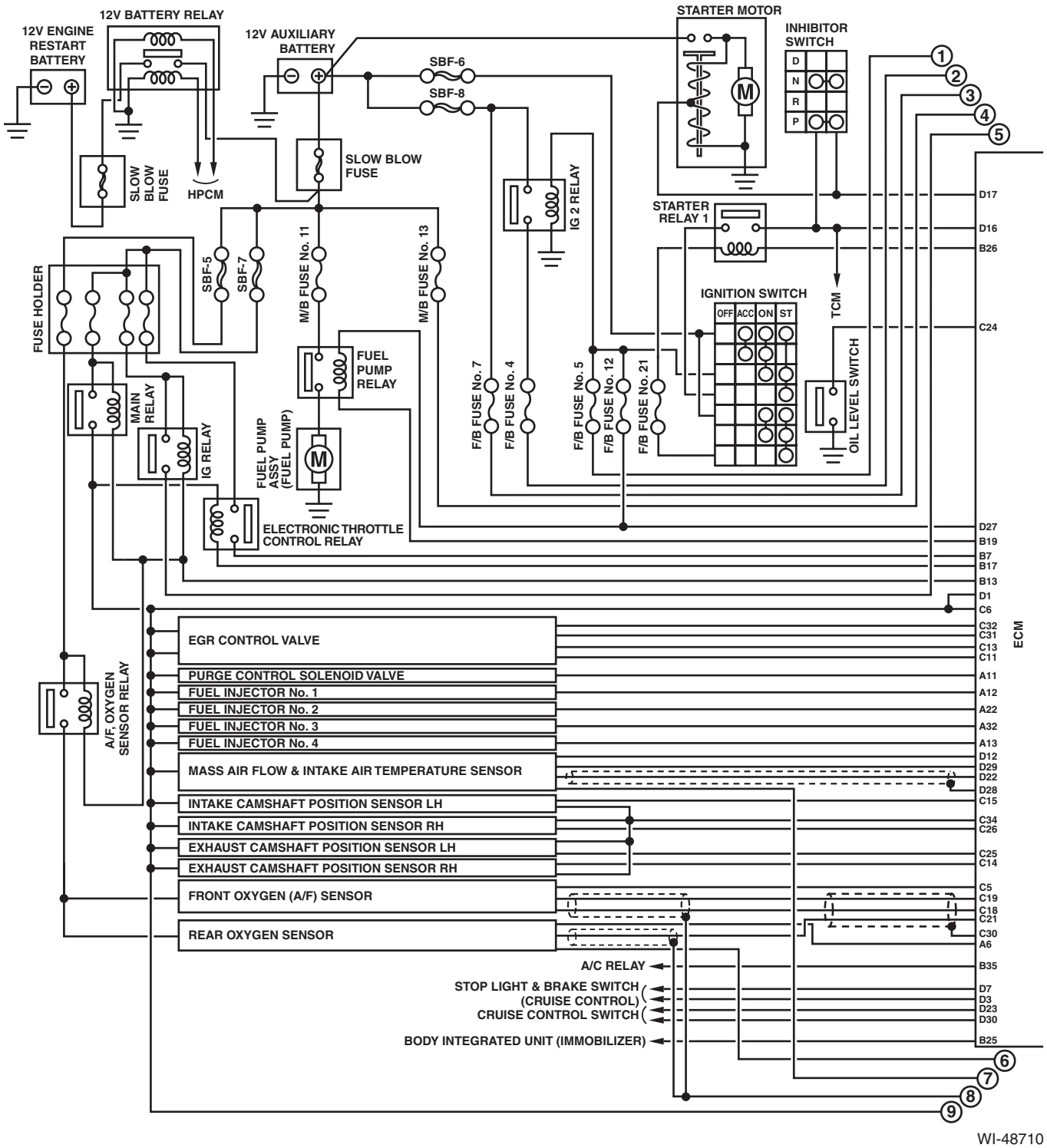

WI-48710

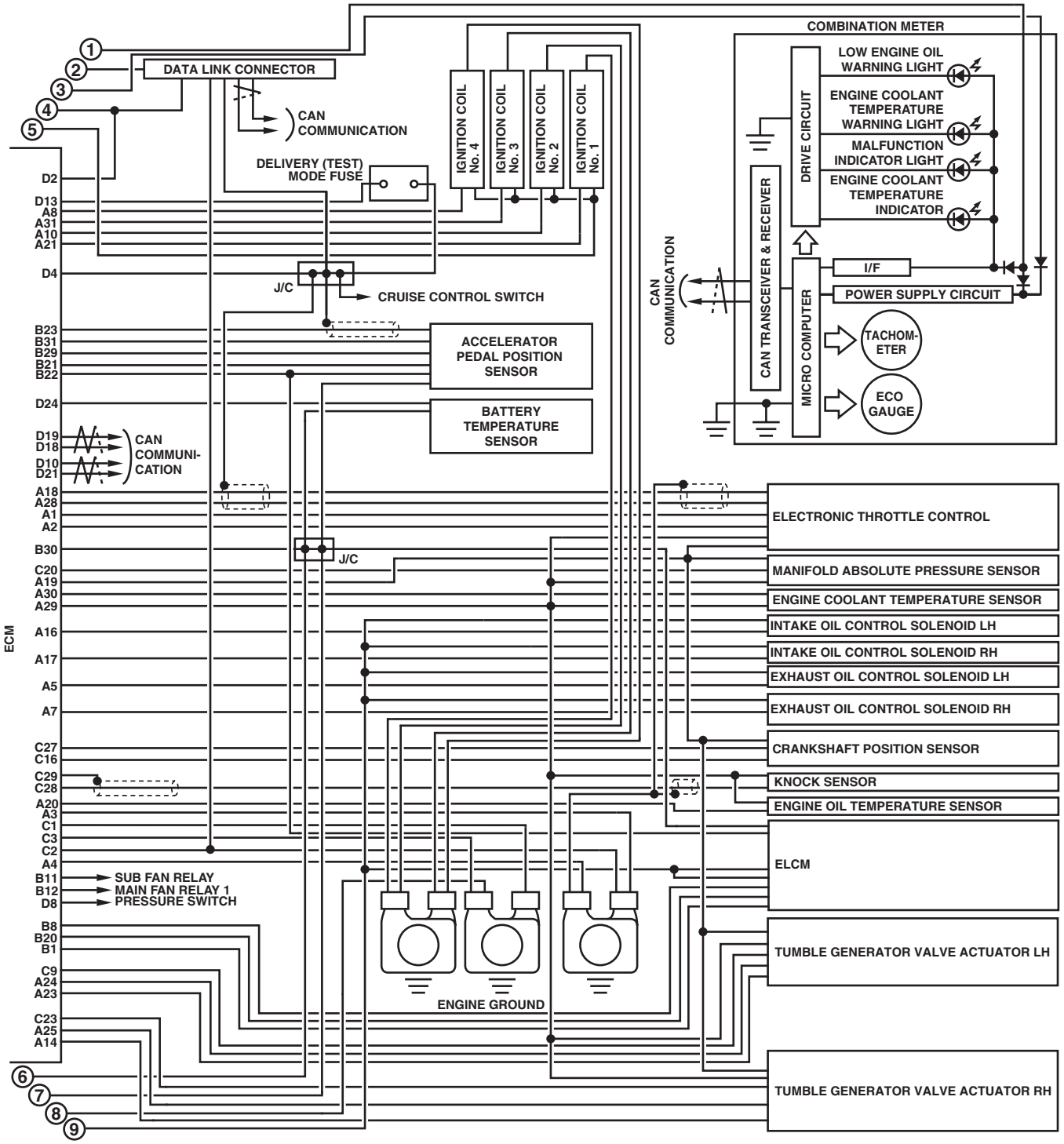
COMBINATION METER
LOW ENGINE OIL WARNING LIGHT
ENGINE COOLANT TEMPERATURE WARNING LIGHT
MALFUNCTION INDICATOR LIGHT
ENGINE COOLANT TEMPERATURE INDICATOR
DRIVE CIRCUIT
I/F
POWER SUPPLY CIRCUIT
TACHOM-ETER
ECO GAUGE
MICRO COMPUTER
CAN TRANSCEIVER & RECEIVER
CAN COMMUNICATION
DATA LINK CONNECTOR
CAN COMMUNICATION
DELIVERY (TEST) MODE FUSE
IGNITION COIL No. 4
IGNITION COIL No. 3
IGNITION COIL No. 2
IGNITION COIL No. 1
J/C
CRUISE CONTROL SWITCH
ACCELERATOR PEDAL POSITION SENSOR
BATTERY TEMPERATURE SENSOR
CAN COMMUNI-CATION
ECM
J/C
ELECTRONIC THROTTLE CONTROL
MANIFOLD ABSOLUTE PRESSURE SENSOR
ENGINE COOLANT TEMPERATURE SENSOR
INTAKE OIL CONTROL SOLENOID LH
INTAKE OIL CONTROL SOLENOID RH
EXHAUST OIL CONTROL SOLENOID LH
EXHAUST OIL CONTROL SOLENOID RH
CRANKSHAFT POSITION SENSOR
KNOCK SENSOR
ENGINE OIL TEMPERATURE SENSOR
ELCM
SUB FAN RELAY
MAIN FAN RELAY 1
PRESSURE SWITCH
TUMBLE GENERATOR VALVE ACTUATOR LH
ENGINE GROUND
TUMBLE GENERATOR VALVE ACTUATOR RH
D2
D13
A8
A31
A10
A21
D4
B23
B31
B29
B21
B22
D24
D19
D18
D10
D21
A18
A28
A1
A2
B30
C20
A19
A30
A29
A16
A17
A5
A7
C27
C16
C29
C28
A20
A3
C1
C3
C2
A4
B11
B12
D8
B8
B20
B1
C9
A24
A23
C23
A25
A14
1
2
3
4
5
6
7
8
9

WI-48711

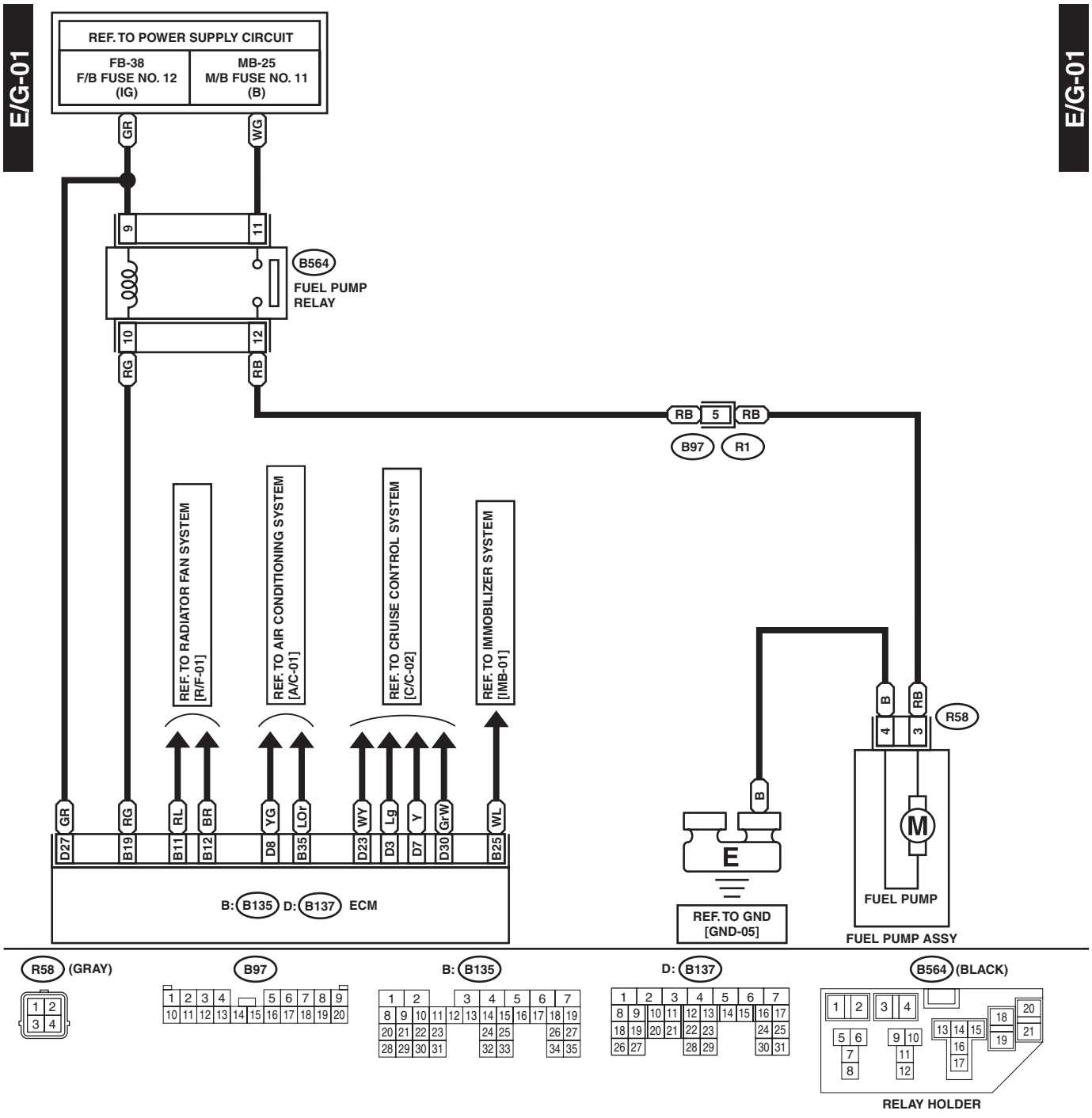
E/G-01
E/G-01
REF. TO POWER SUPPLY CIRCUIT
FB-38
F/B FUSE NO. 12
(IG)
MB-25
M/B FUSE NO. 11
(B)
GR
WG
9
11
B564
FUEL PUMP
RELAY
10
12
RG
RB
RB
5
RB
B97
R1
REF. TO RADIATOR FAN SYSTEM
[R/F-01]
REF. TO AIR CONDITIONING SYSTEM
[A/C-01]
REF. TO CRUISE CONTROL SYSTEM
[C/C-02]
REF. TO IMMOBILIZER SYSTEM
[IMB-01]
B
RB
4
3
R58
GR
RG
RL
BR
YG
LOr
WY
Lg
Y
GrW
WL
D27
B19
B11
B12
D8
B35
D23
D3
D7
D30
B25
B
E
M
B: B135 D: B137 ECM
REF. TO GND
[GND-05]
FUEL PUMP
FUEL PUMP ASSY
R58 (GRAY)
B97
B: B135
D: B137
B564 (BLACK)
RELAY HOLDER

WI-48083

E/G-02

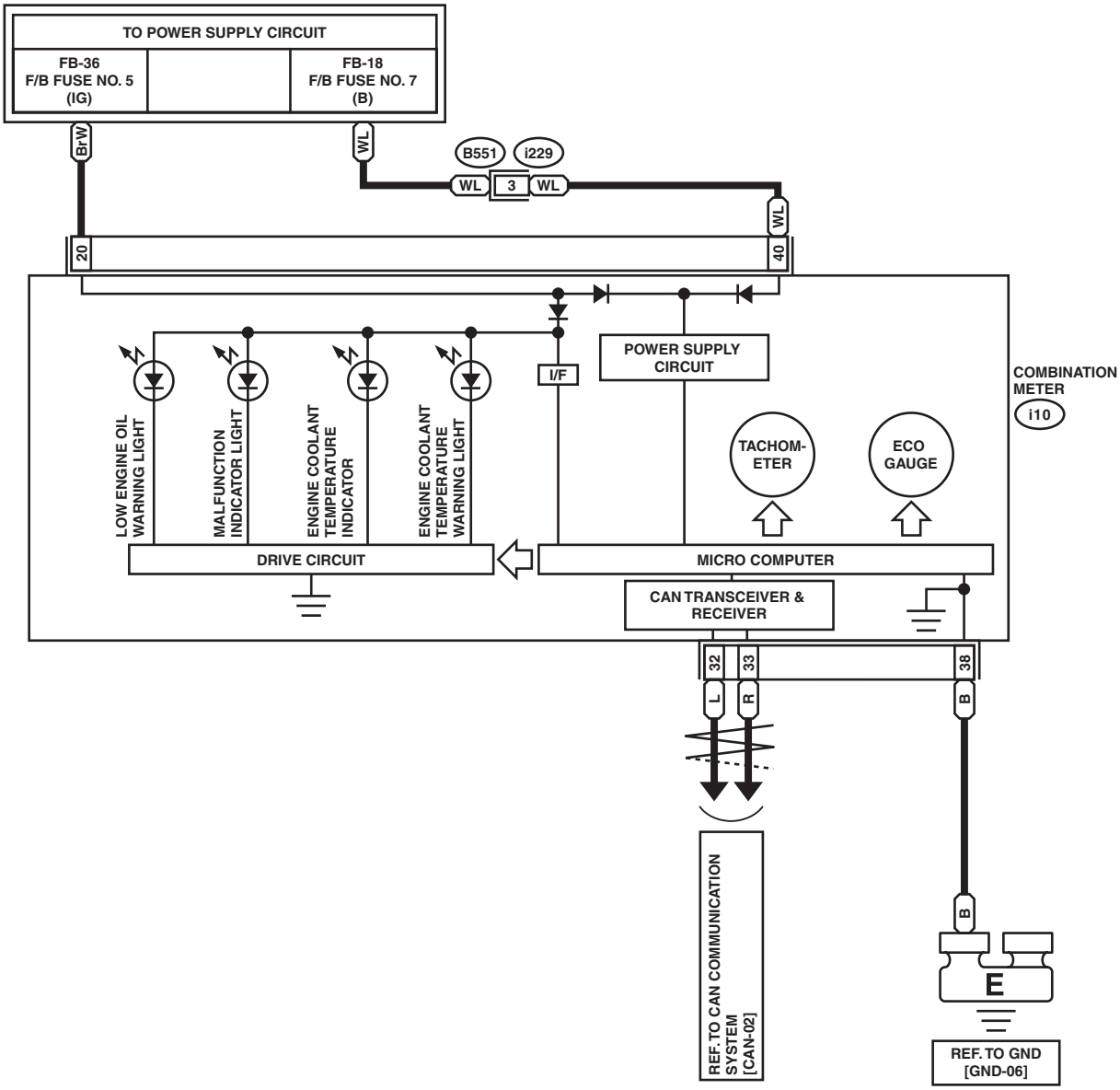

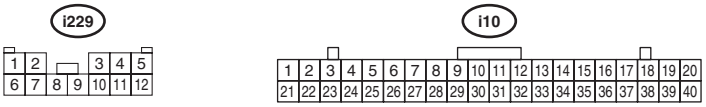

WI-41849

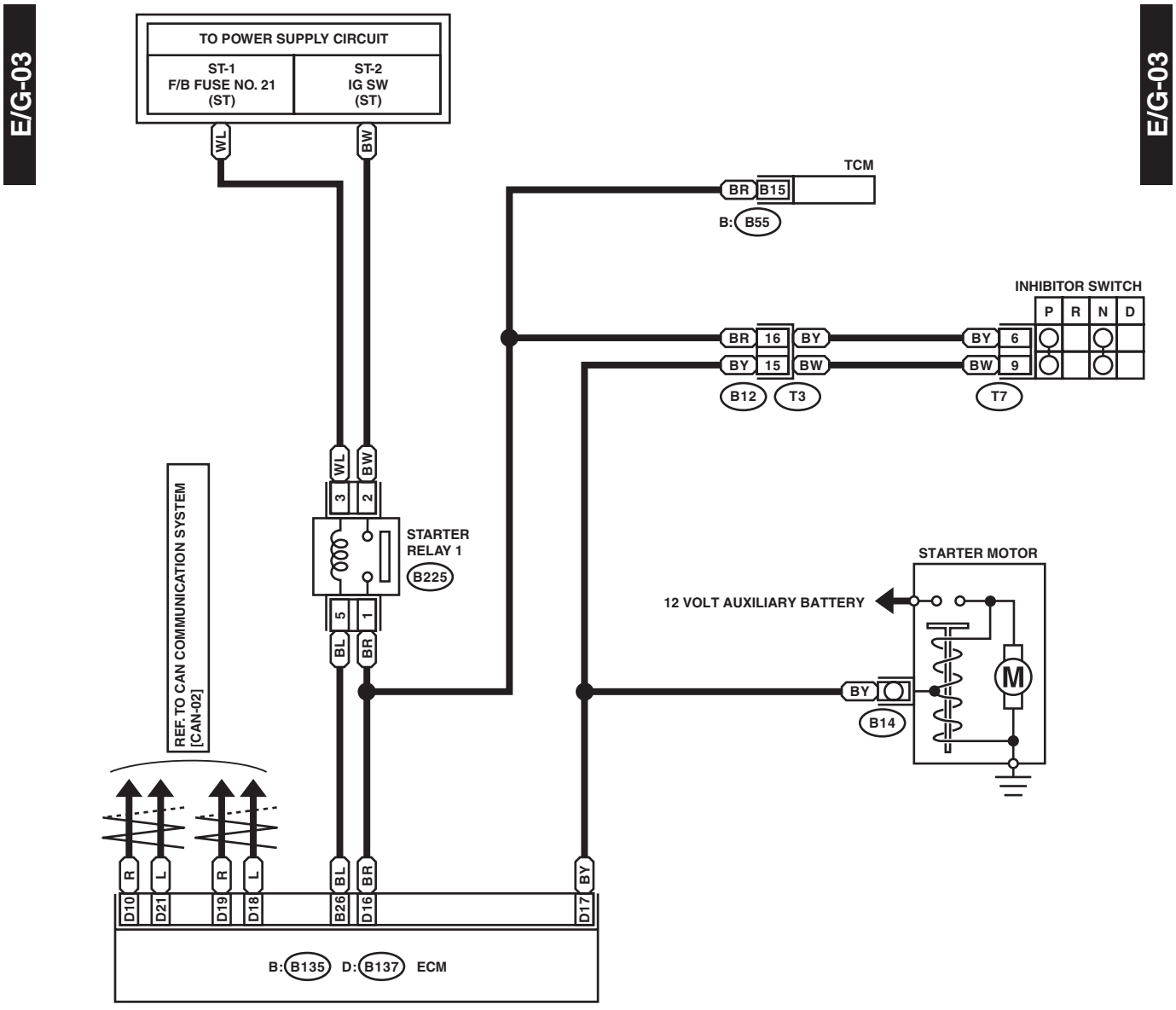
E/G-03
E/G-03
TO POWER SUPPLY CIRCUIT
ST-1
F/B FUSE NO. 21
(ST)
ST-2
IG SW
(ST)
WL
BW
TCM
BR
B15
B: B55
INHIBITOR SWITCH
P
R
N
D
BR
16
BY
BY
6
BY
15
BW
BW
9
B12
T3
T7
REF. TO CAN COMMUNICATION SYSTEM
[CAN-02]
STARTER
RELAY 1
B225
3
2
5
1
BL
BR
STARTER MOTOR
12 VOLT AUXILIARY BATTERY
M
BY
B14
R
L
R
L
BL
BR
BY
D10
D21
D19
D18
B26
D16
D17
B: B135
D: B137
ECM

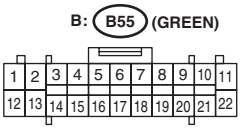
B: B55 (GREEN)

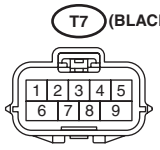
T7 (BLACK)

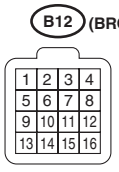
B12 (BROWN)

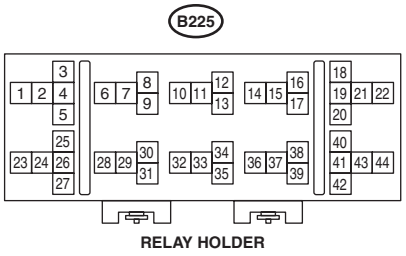
B225
RELAY HOLDER

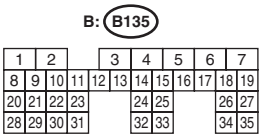
B: B135

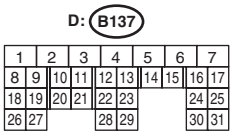
D: B137

WI-41850

E/G-04

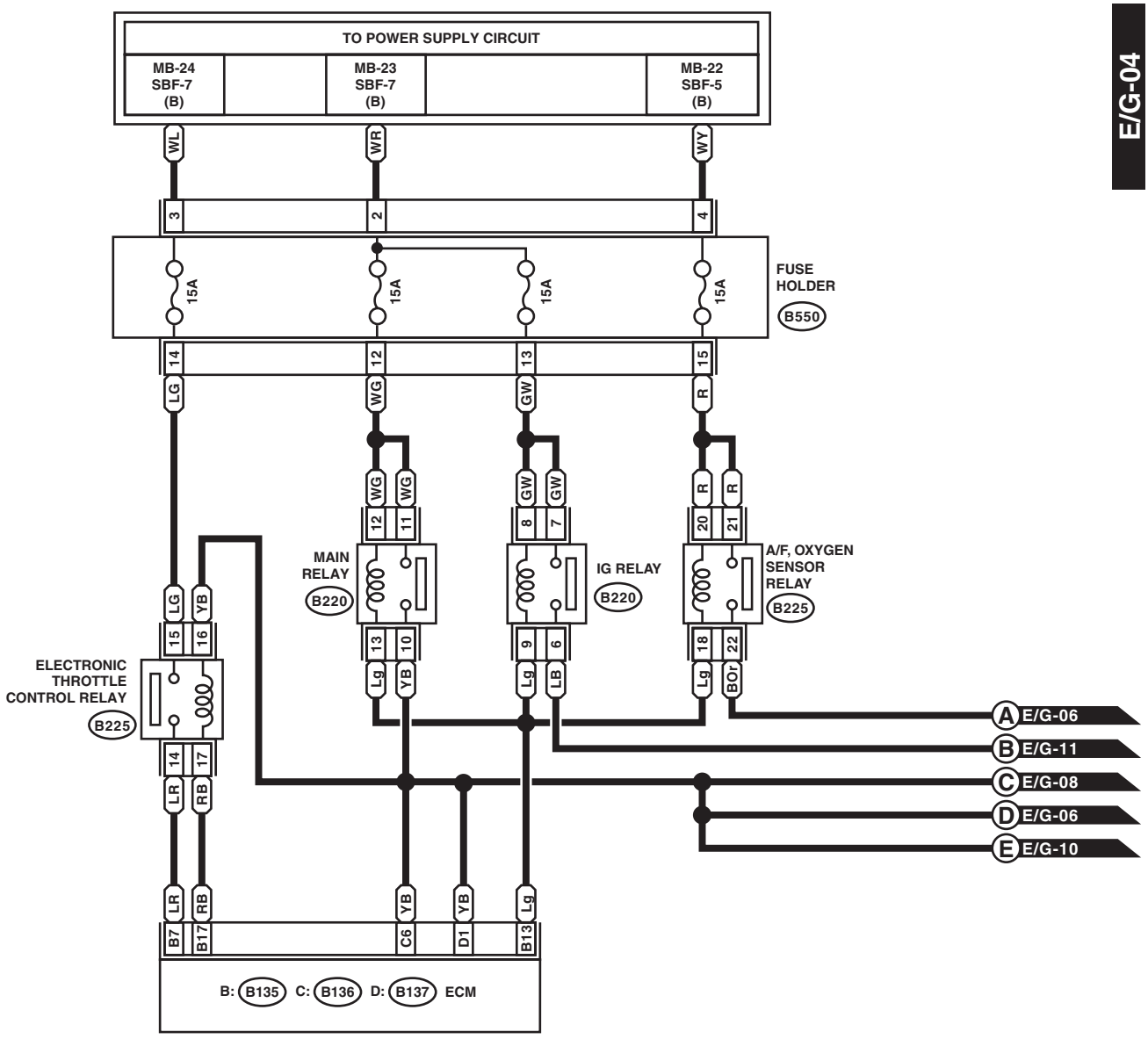

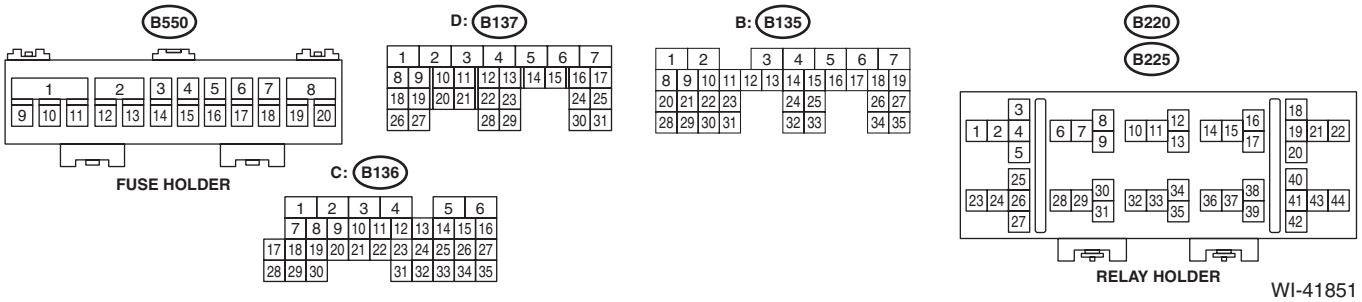

WI-41851

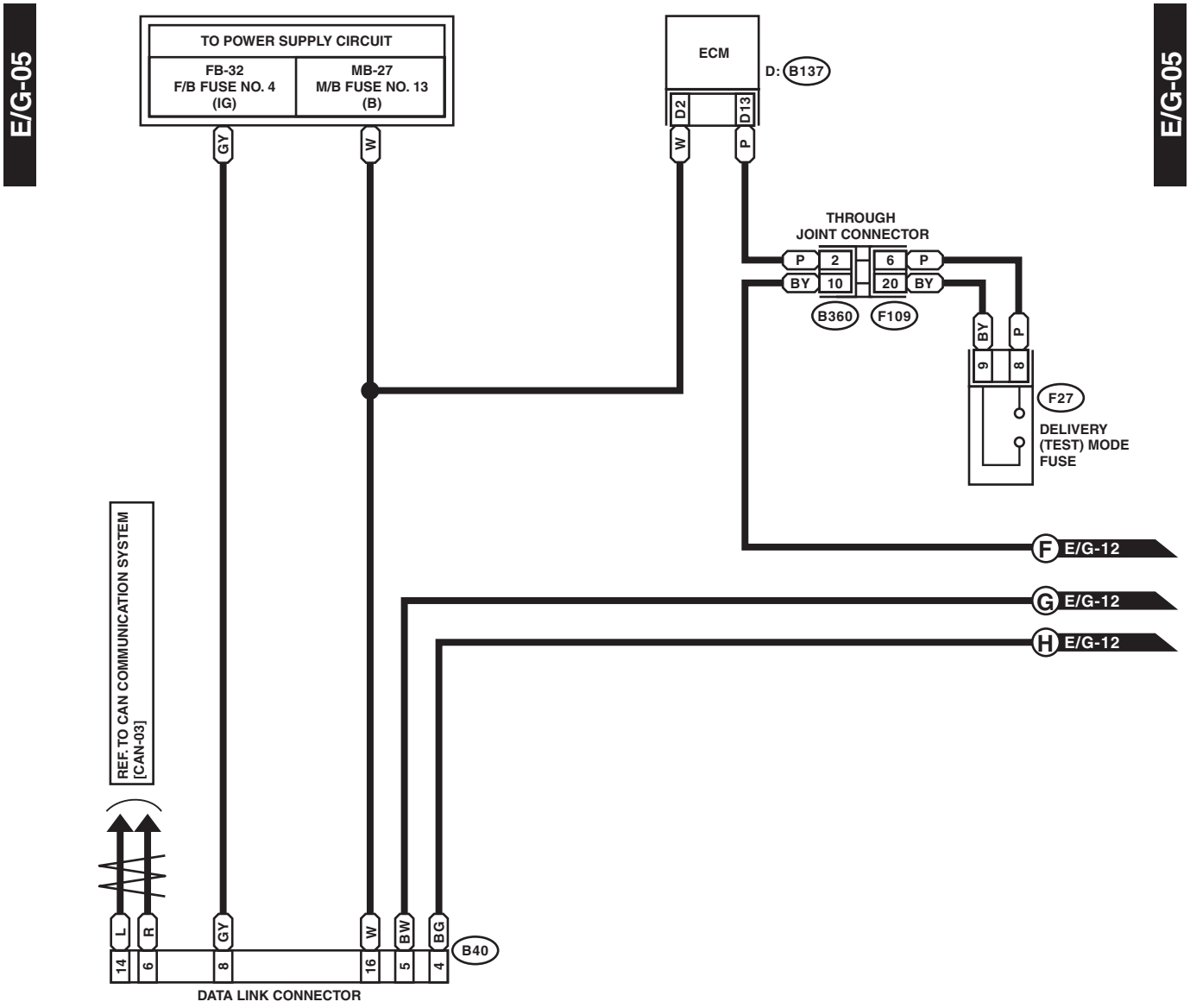
E/G-05
E/G-05
TO POWER SUPPLY CIRCUIT
FB-32
F/B FUSE NO. 4
(IG)
MB-27
M/B FUSE NO. 13
(B)
ECM
D: B137
D2
D13
GY
W
W
P
THROUGH
JOINT CONNECTOR
P 2
BY 10
6 P
20 BY
B360
F109
BY
P
9
8
F27
DELIVERY
(TEST) MODE
FUSE
F E/G-12
G E/G-12
H E/G-12
REF. TO CAN COMMUNICATION SYSTEM
[CAN-03]
L
R
GY
W
BW
BG
B40
14
6
8
16
5
4
DATA LINK CONNECTOR

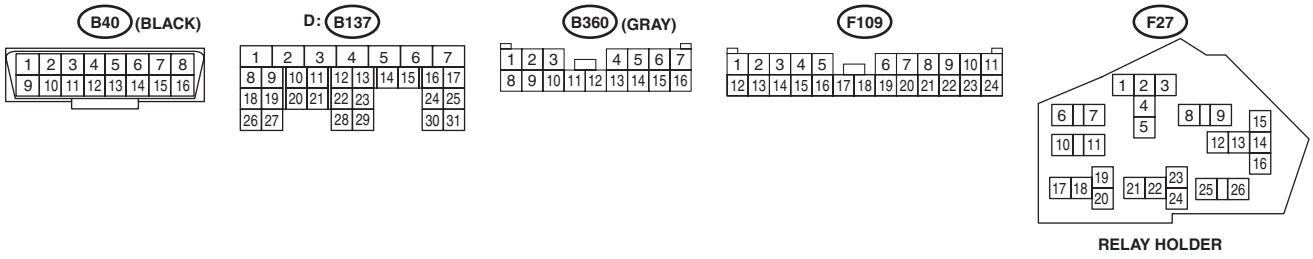
B40 (BLACK)
1 2 3 4 5 6 7 8
9 10 11 12 13 14 15 16
D: B137
1 2 3 4 5 6 7
8 9 10 11 12 13 14 15 16 17
18 19 20 21 22 23 24 25
26 27 28 29 30 31
B360 (GRAY)
1 2 3 4 5 6 7
8 9 10 11 12 13 14 15 16
F109
1 2 3 4 5 6 7 8 9 10 11
12 13 14 15 16 17 18 19 20 21 22 23 24
F27
1 2 3 4 5
6 7 8 9 10 11 12 13 14 15 16 17 18 19 20 21 22 23 24 25 26
RELAY HOLDER

WI-41852

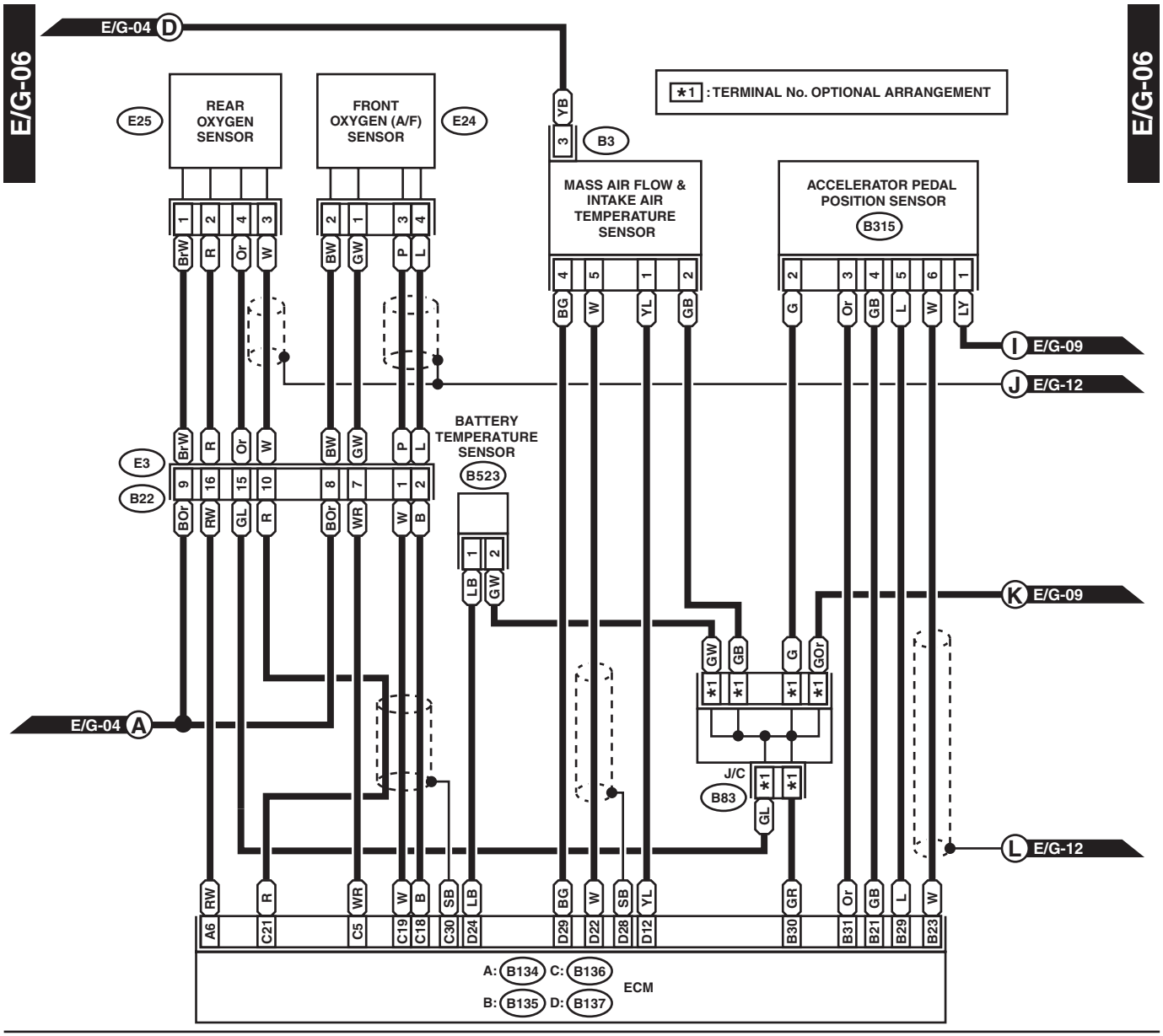
E/G-06
E/G-06
E/G-04 D
*1 : TERMINAL No. OPTIONAL ARRANGEMENT
E25
REAR OXYGEN SENSOR
FRONT OXYGEN (A/F) SENSOR
E24
B3
MASS AIR FLOW & INTAKE AIR TEMPERATURE SENSOR
ACCELERATOR PEDAL POSITION SENSOR
B315
I E/G-09
J E/G-12
BATTERY TEMPERATURE SENSOR
B523
E3
B22
K E/G-09
E/G-04 A
J/C
B83
L E/G-12
A: B134 C: B136
B: B135 D: B137
ECM

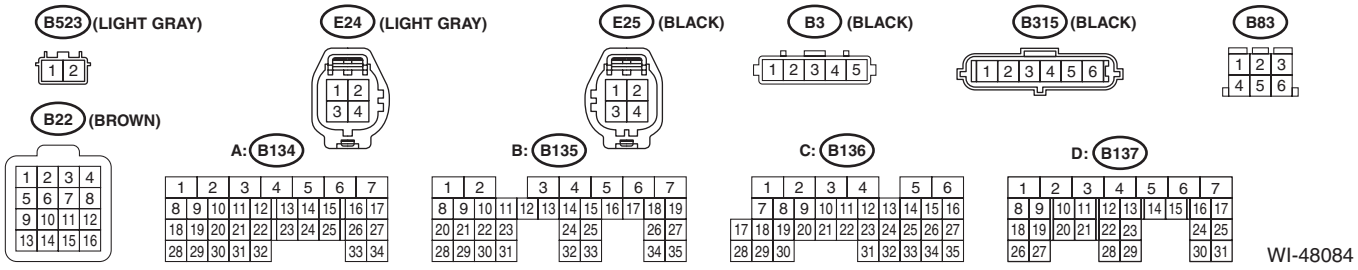
B523 (LIGHT GRAY)
E24 (LIGHT GRAY)
E25 (BLACK)
B3 (BLACK)
B315 (BLACK)
B83
B22 (BROWN)
A: B134
B: B135
C: B136
D: B137
WI-48084

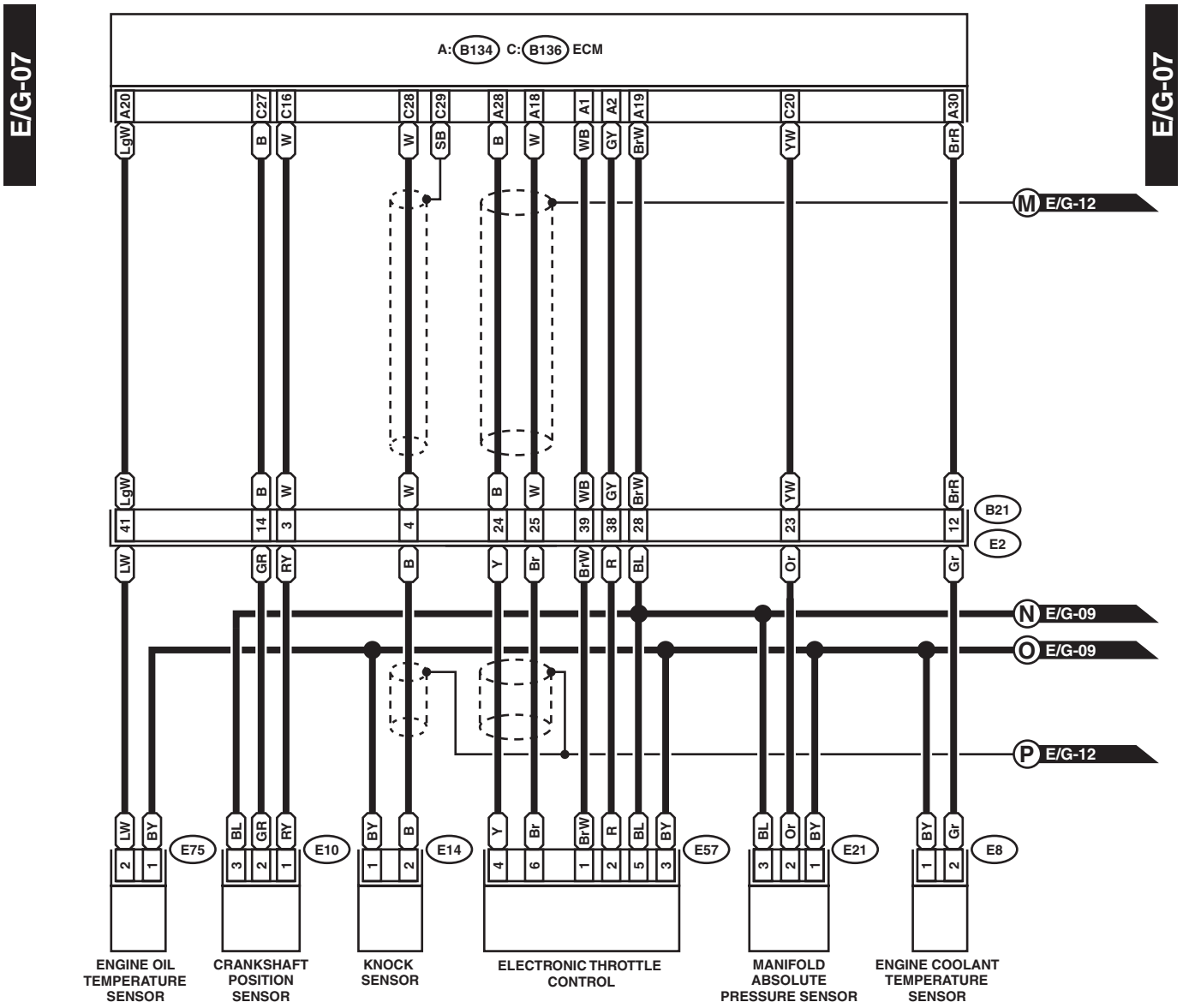
E/G-07
E/G-07
A: B134 C: B136 ECM
A20 C27 C16 C28 C29 A28 A18 A1 A2 A19 C20 A30
LgW B W W SB B W WB GY BrW YW BrR
M E/G-12
41 14 3 4 24 25 39 38 28 23 12
B21
E2
LW GR RY B Y Br BrW R BL Or Gr
N E/G-09
O E/G-09
P E/G-12
E75 E10 E14 E57 E21 E8
ENGINE OIL TEMPERATURE SENSOR
CRANKSHAFT POSITION SENSOR
KNOCK SENSOR
ELECTRONIC THROTTLE CONTROL
MANIFOLD ABSOLUTE PRESSURE SENSOR
ENGINE COOLANT TEMPERATURE SENSOR

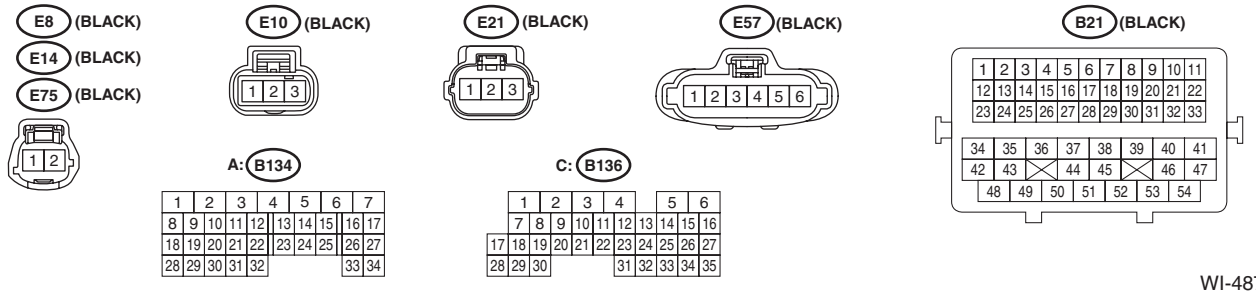
E8 (BLACK)
E14 (BLACK)
E75 (BLACK)
E10 (BLACK)
E21 (BLACK)
E57 (BLACK)
B21 (BLACK)
A: B134
C: B136

WI-48712

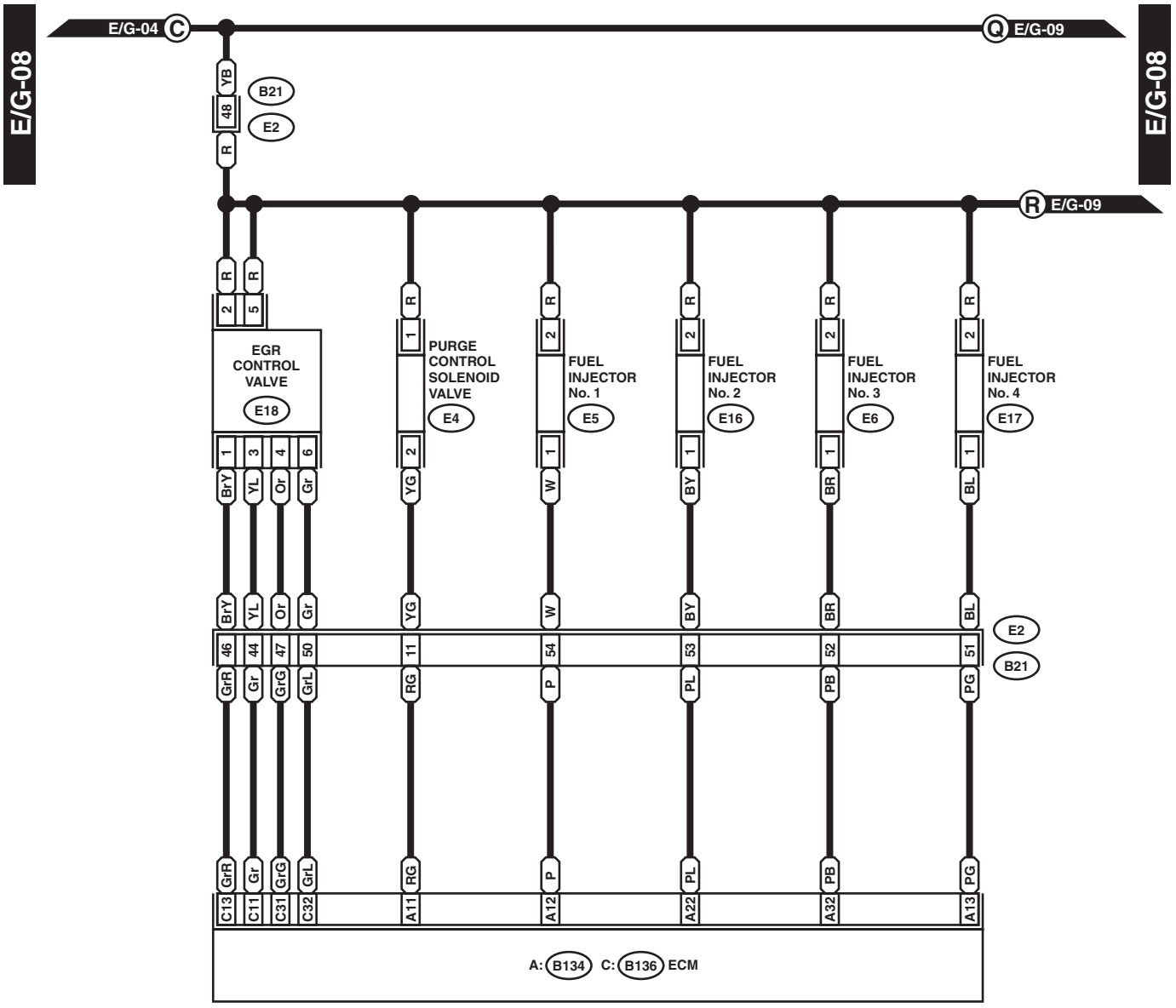

E4 (BLUE)

(DARK GRAY) E5 E16 (DARK GRAY)

(DARK GRAY) E6 E17 (DARK GRAY)

E18 (DARK GRAY)

B21 (BLACK)

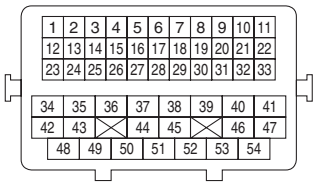

A: B134

1	2	3	4	5	6	7
8	9	10	11	12	13	14	15	16	17
18	19	20	21	22	23	24	25	26	27
28	29	30	31	32				33	34

C: B136

1	2	3	4					5	6					
	7	8	9	10	11	12	13	14	15	16				
17	18	19	20	21	22	23	24	25	26	27				
28	29	30				31	32	33	34	35				

WI-41855

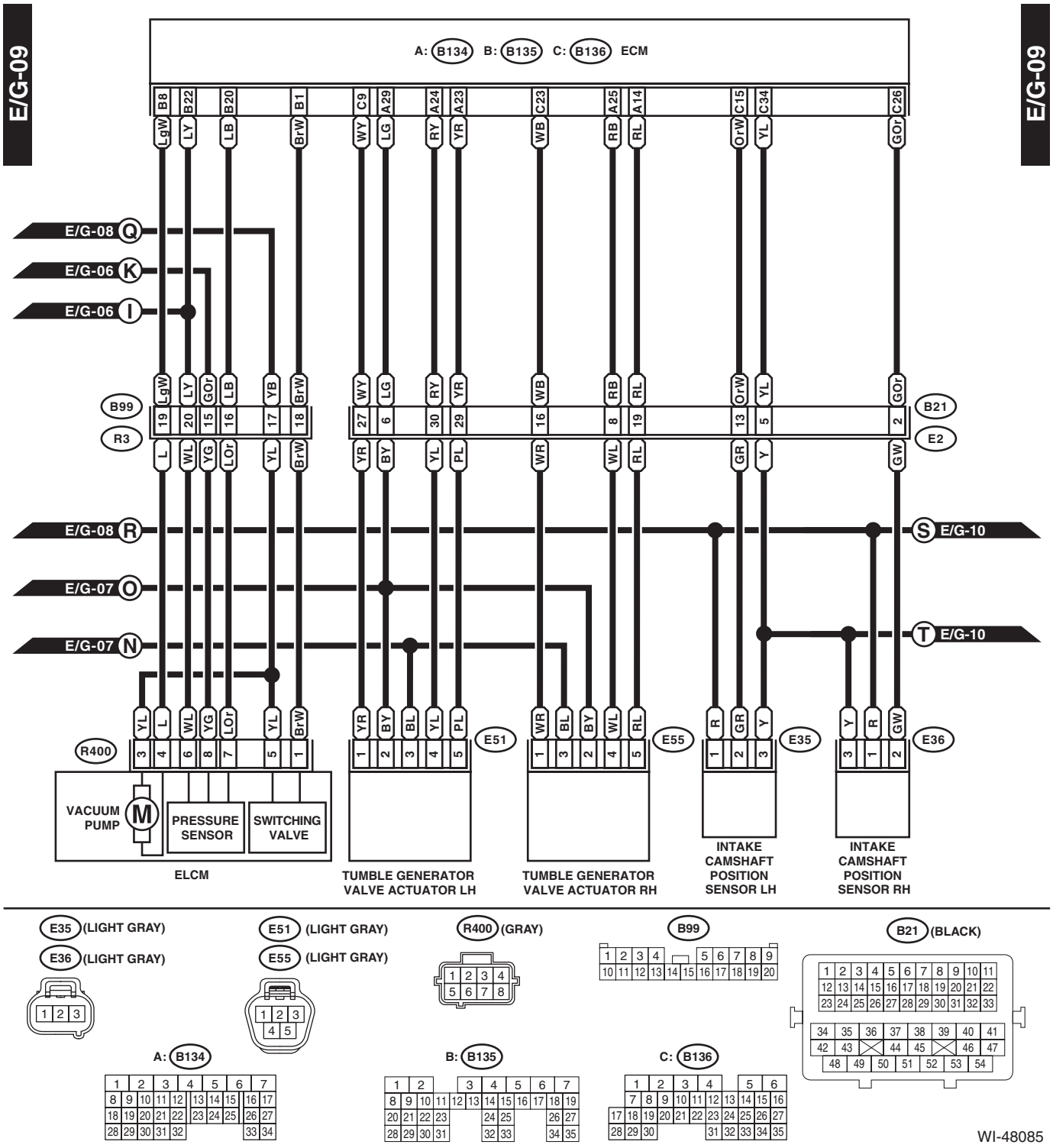
E/G-09
E/G-09
A: B134 B: B135 C: B136 ECM
B8 B22 B20 B1 C9 A29 A24 A23 C23 A25 A14 C15 C34 C26
LgW LY LB BrW WY LG RY YR WB RB RL OrW YL GOr
E/G-08 Q
E/G-06 K
E/G-06 I
B99
R3
19 20 15 16 17 18
27 6 30 29 16 8 19 13 5 2
B21
E2
L WL YG LOr YL BrW YR BY YL PL WR WL RL GR Y GW
E/G-08 R
E/G-07 O
E/G-07 N
S E/G-10
T E/G-10
YL L WL YG LOr YL BrW
R400
3 4 6 8 7 5 1
VACUUM PUMP
M
PRESSURE SENSOR
SWITCHING VALVE
ELCM
YR BY BL YL PL
1 2 3 4 5
E51
TUMBLE GENERATOR VALVE ACTUATOR LH
WR BL BY WL RL
1 3 2 4 5
E55
TUMBLE GENERATOR VALVE ACTUATOR RH
R GR Y
1 2 3
E35
INTAKE CAMSHAFT POSITION SENSOR LH
Y R GW
3 1 2
E36
INTAKE CAMSHAFT POSITION SENSOR RH

E35 (LIGHT GRAY)
E36 (LIGHT GRAY)
E51 (LIGHT GRAY)
E55 (LIGHT GRAY)
R400 (GRAY)
B99
B21 (BLACK)
A: B134
B: B135
C: B136
WI-48085

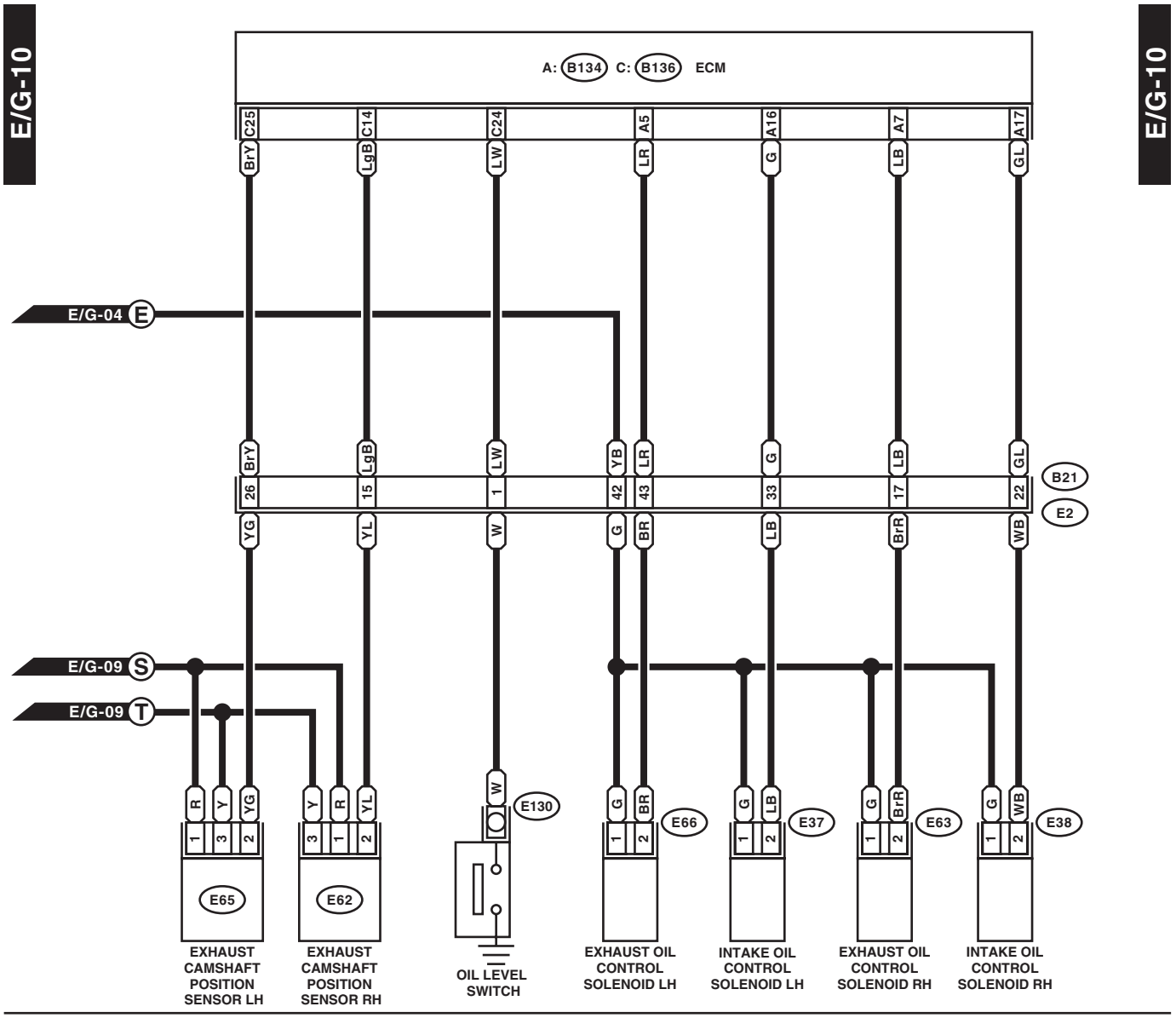
E/G-10
E/G-10
A: B134 C: B136 ECM
C25
C14
C24
A5
A16
A7
A17
BrY
LgB
LW
LR
G
LB
GL
E/G-04 E
BrY
LgB
LW
YB
LR
G
LB
GL
26
15
1
42
43
33
17
22
B21
E2
YG
YL
W
G
BR
LB
BrR
WB
E/G-09 S
E/G-09 T
R
Y
YG
Y
R
YL
W
G
BR
G
LB
G
BrR
G
WB
1
3
2
3
1
2
1
2
1
2
1
2
1
2
E130
E66
E37
E63
E38
E65
E62
EXHAUST CAMSHAFT POSITION SENSOR LH
EXHAUST CAMSHAFT POSITION SENSOR RH
OIL LEVEL SWITCH
EXHAUST OIL CONTROL SOLENOID LH
INTAKE OIL CONTROL SOLENOID LH
EXHAUST OIL CONTROL SOLENOID RH
INTAKE OIL CONTROL SOLENOID RH

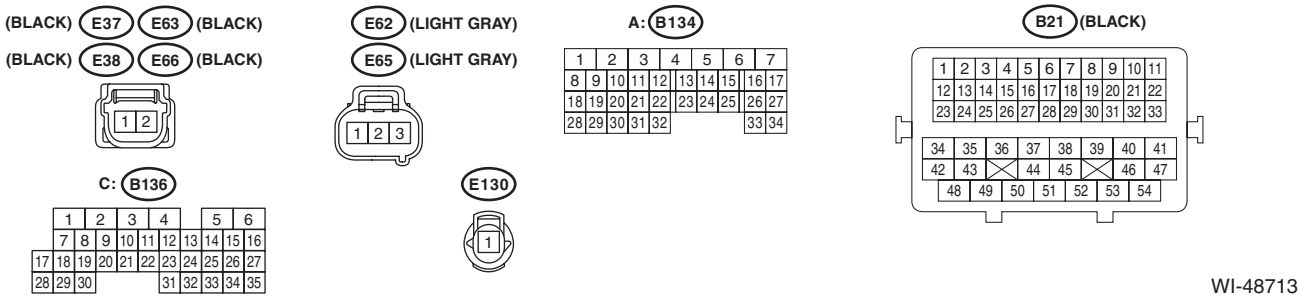
(BLACK) E37 E63 (BLACK)
(BLACK) E38 E66 (BLACK)
1 2
C: B136
1 2 3 4 5 6
7 8 9 10 11 12 13 14 15 16
17 18 19 20 21 22 23 24 25 26 27
28 29 30 31 32 33 34 35
E62 (LIGHT GRAY)
E65 (LIGHT GRAY)
1 2 3
E130
1
A: B134
1 2 3 4 5 6 7
8 9 10 11 12 13 14 15 16 17
18 19 20 21 22 23 24 25 26 27
28 29 30 31 32 33 34
B21 (BLACK)
1 2 3 4 5 6 7 8 9 10 11
12 13 14 15 16 17 18 19 20 21 22
23 24 25 26 27 28 29 30 31 32 33
34 35 36 37 38 39 40 41
42 43 44 45 46 47
48 49 50 51 52 53 54

WI-48713

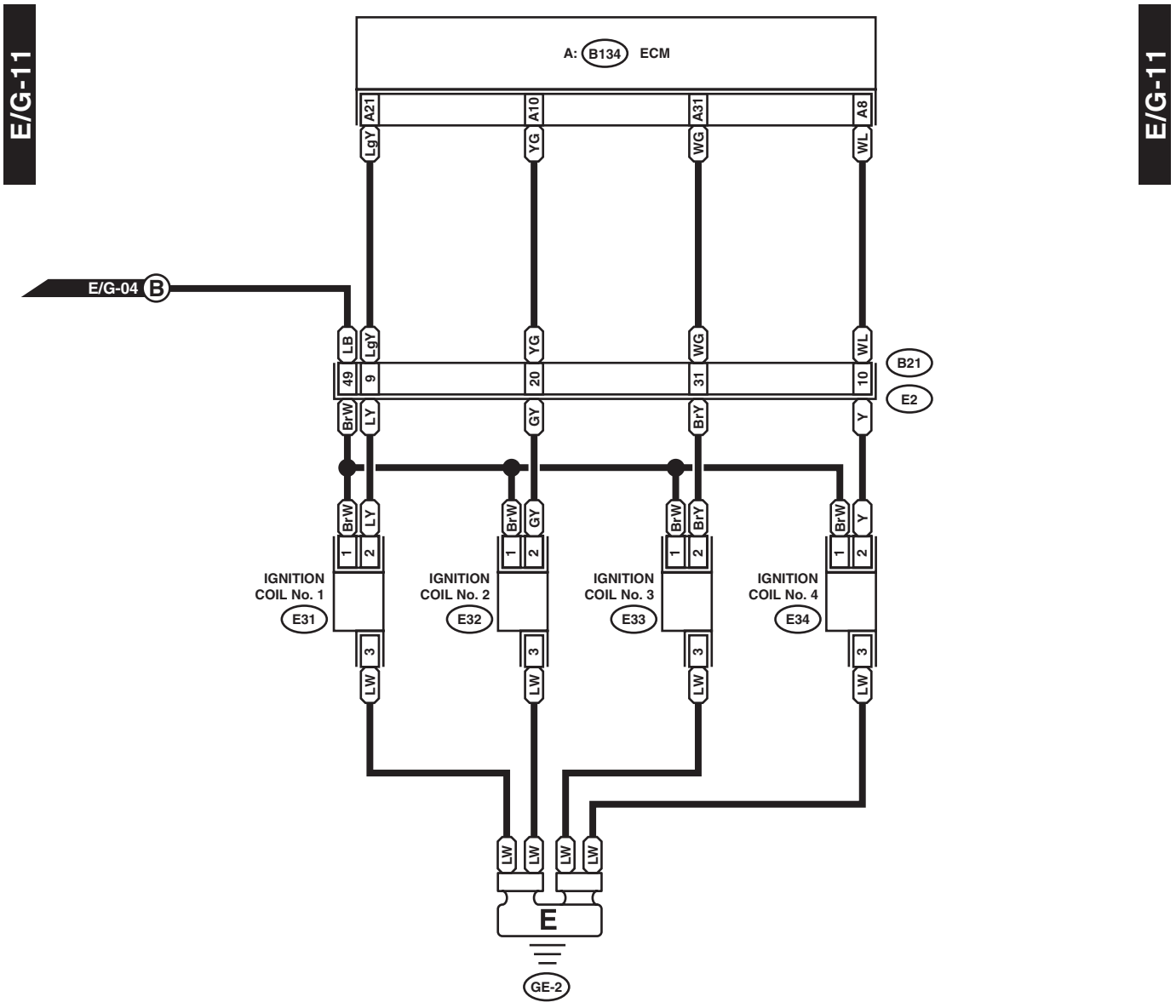
E/G-11
E/G-11
A: B134 ECM
A21
A10
A31
A8
LgY
YG
WG
WL
E/G-04 B
LB
LgY
YG
WG
WL
B21
E2
49
9
20
31
10
BrW
LY
GY
BrY
Y
IGNITION COIL No. 1
E31
IGNITION COIL No. 2
E32
IGNITION COIL No. 3
E33
IGNITION COIL No. 4
E34
1
2
3
LW
E
GE-2

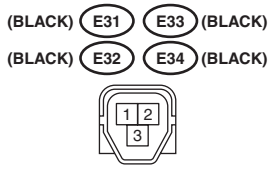
(BLACK) E31
E33 (BLACK)
(BLACK) E32
E34 (BLACK)
1 2
3

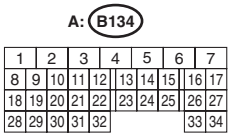
A: B134
1 2 3 4 5 6 7
8 9 10 11 12 13 14 15 16 17
18 19 20 21 22 23 24 25 26 27
28 29 30 31 32 33 34

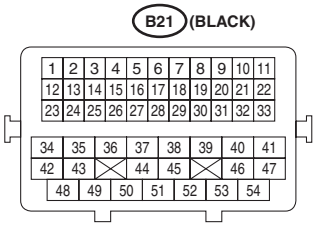
B21 (BLACK)
1 2 3 4 5 6 7 8 9 10 11
12 13 14 15 16 17 18 19 20 21 22
23 24 25 26 27 28 29 30 31 32 33
34 35 36 37 38 39 40 41
42 43 44 45 46 47
48 49 50 51 52 53 54

WI-48086

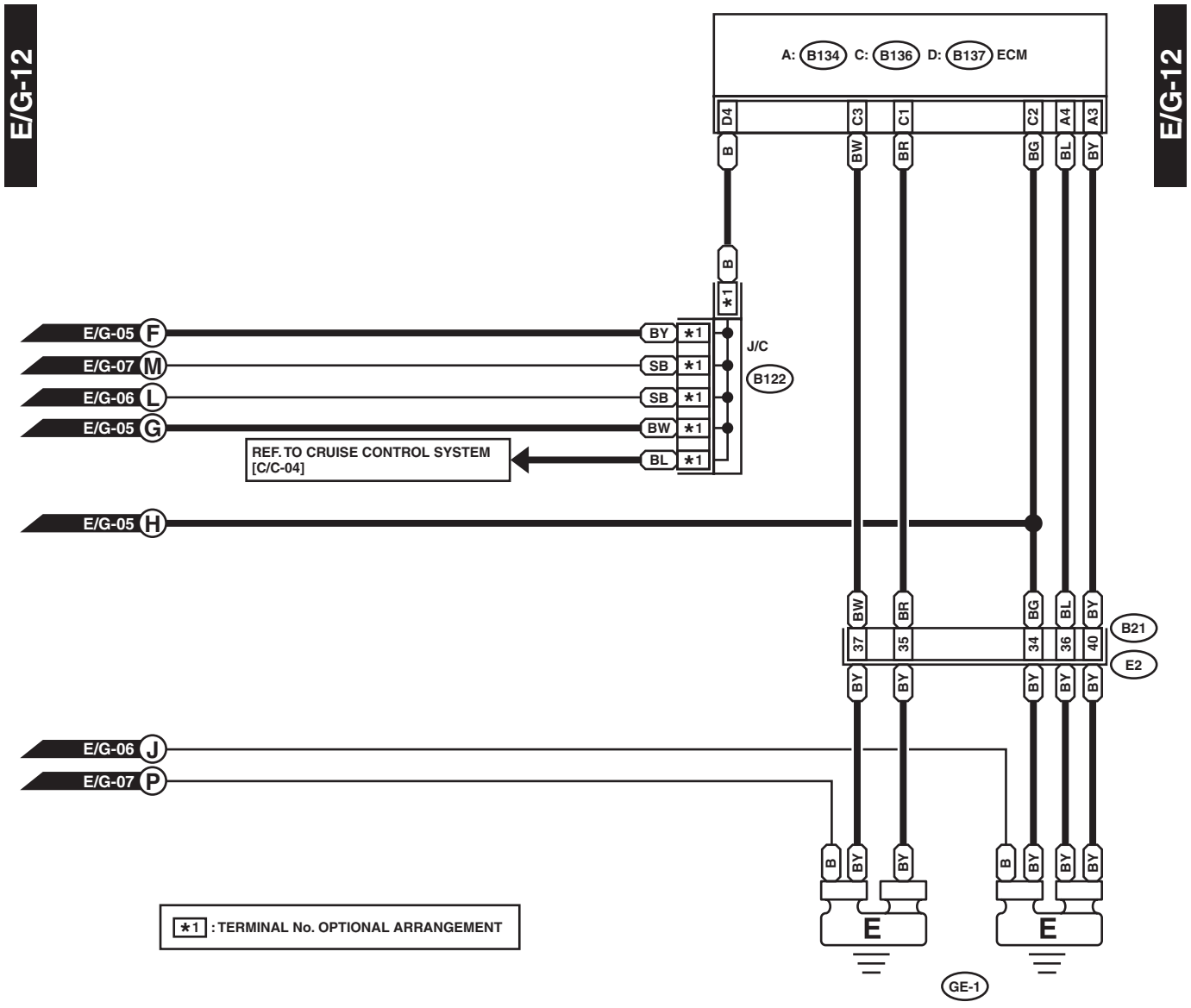
E/G-12
E/G-12
A: B134 C: B136 D: B137 ECM
D4
C3
C1
C2
A4
A3
B
BW
BR
BG
BL
BY
*1
J/C
B122
E/G-05 F
E/G-07 M
E/G-06 L
E/G-05 G
E/G-05 H
E/G-06 J
E/G-07 P
SB
REF. TO CRUISE CONTROL SYSTEM [C/C-04]
37
35
34
36
40
B21
E2
*1 : TERMINAL No. OPTIONAL ARRANGEMENT
E
GE-1

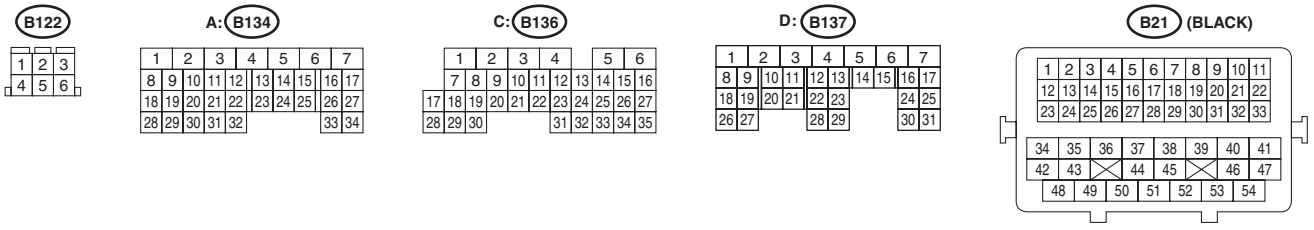
B122
A: B134
C: B136
D: B137
B21 (BLACK)

WI-41859

2. WITH PUSH BUTTON START

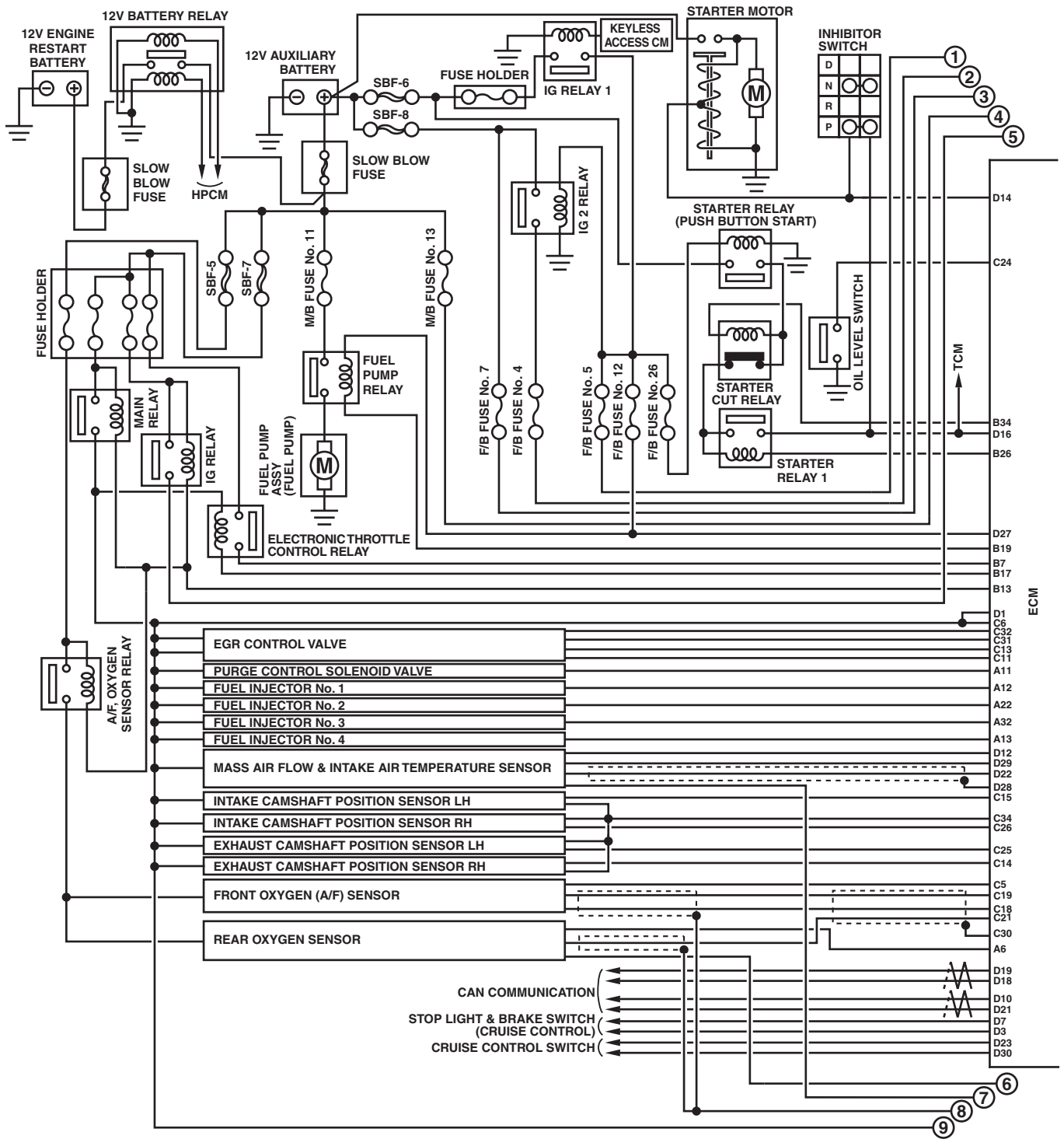

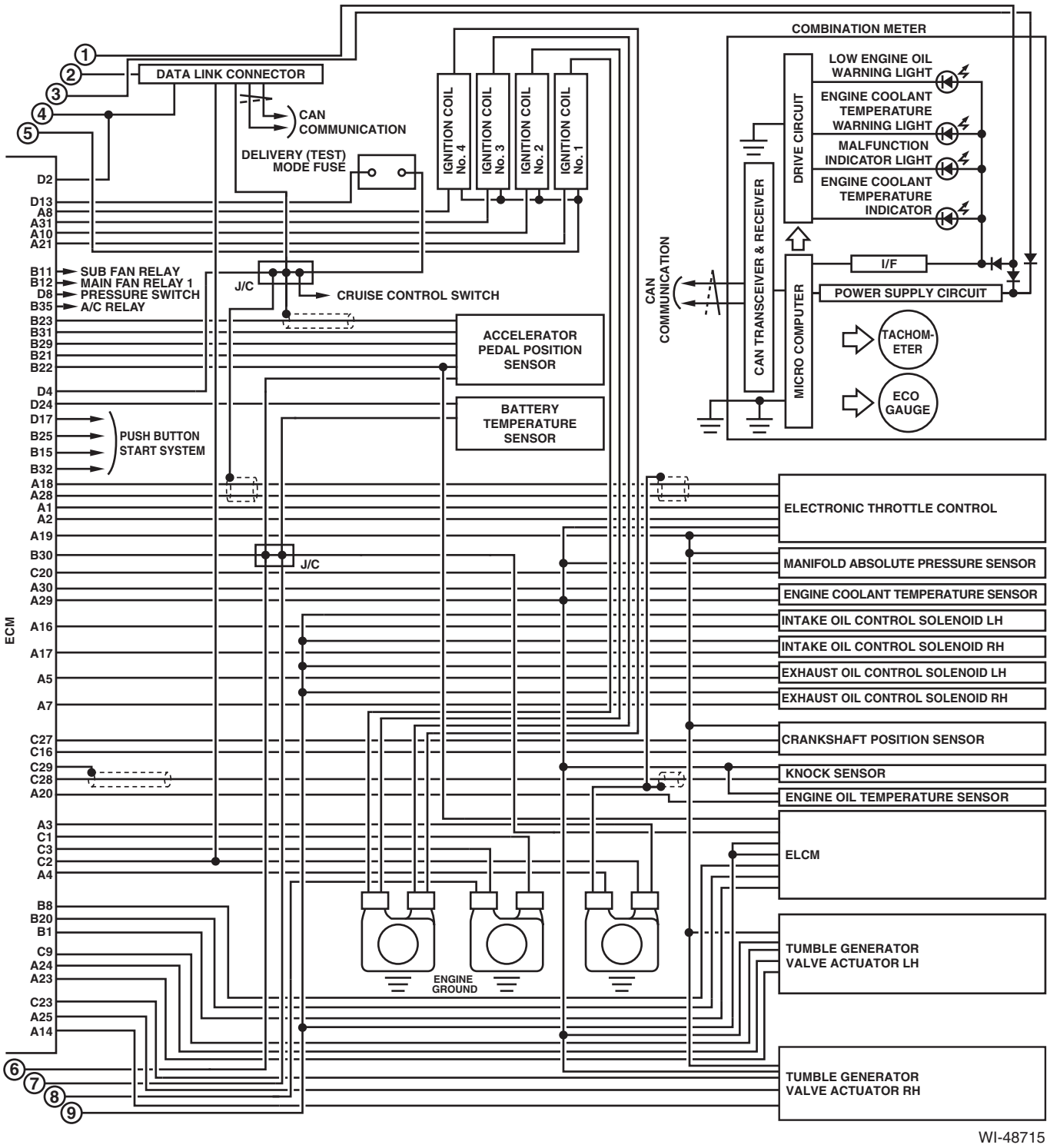
COMBINATION METER
LOW ENGINE OIL WARNING LIGHT
ENGINE COOLANT TEMPERATURE WARNING LIGHT
MALFUNCTION INDICATOR LIGHT
ENGINE COOLANT TEMPERATURE INDICATOR
DRIVE CIRCUIT
I/F
POWER SUPPLY CIRCUIT
TACHOM-ETER
ECO GAUGE
MICRO COMPUTER
CAN TRANSCEIVER & RECEIVER
CAN COMMUNICATION
DATA LINK CONNECTOR
CAN COMMUNICATION
DELIVERY (TEST) MODE FUSE
IGNITION COIL No. 4
IGNITION COIL No. 3
IGNITION COIL No. 2
IGNITION COIL No. 1
J/C
CRUISE CONTROL SWITCH
SUB FAN RELAY
MAIN FAN RELAY 1
PRESSURE SWITCH
A/C RELAY
ACCELERATOR PEDAL POSITION SENSOR
BATTERY TEMPERATURE SENSOR
PUSH BUTTON START SYSTEM
ECM
ELECTRONIC THROTTLE CONTROL
MANIFOLD ABSOLUTE PRESSURE SENSOR
ENGINE COOLANT TEMPERATURE SENSOR
INTAKE OIL CONTROL SOLENOID LH
INTAKE OIL CONTROL SOLENOID RH
EXHAUST OIL CONTROL SOLENOID LH
EXHAUST OIL CONTROL SOLENOID RH
CRANKSHAFT POSITION SENSOR
KNOCK SENSOR
ENGINE OIL TEMPERATURE SENSOR
ELCM
TUMBLE GENERATOR VALVE ACTUATOR LH
TUMBLE GENERATOR VALVE ACTUATOR RH
ENGINE GROUND
WI-48715

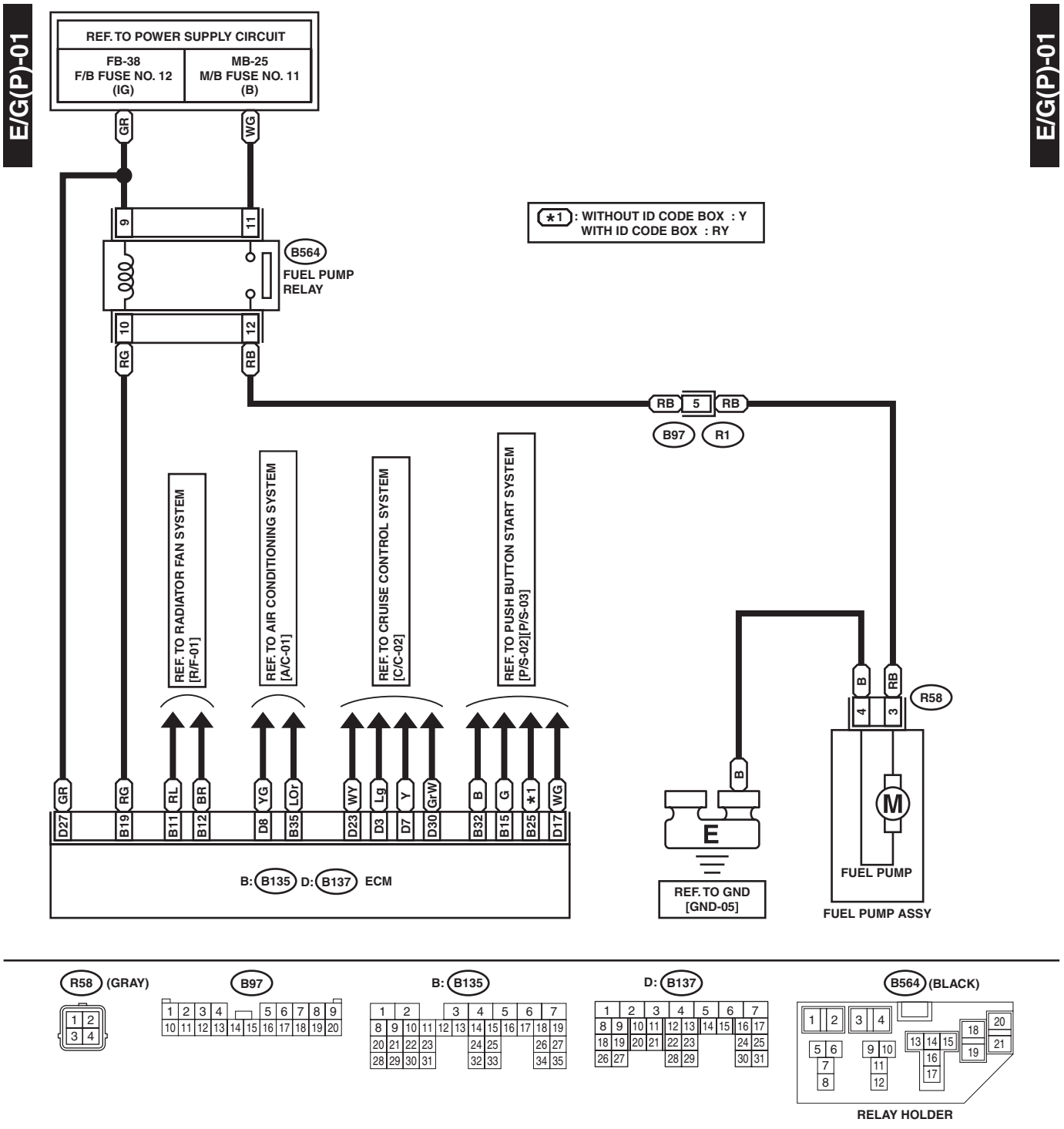
E/G(P)-01
E/G(P)-01
REF. TO POWER SUPPLY CIRCUIT
FB-38
F/B FUSE NO. 12
(IG)
MB-25
M/B FUSE NO. 11
(B)
GR
WG
9
11
B564
FUEL PUMP
RELAY
10
12
RG
RB
*1 : WITHOUT ID CODE BOX : Y
WITH ID CODE BOX : RY
RB
5
RB
B97
R1
REF. TO RADIATOR FAN SYSTEM
[R/F-01]
REF. TO AIR CONDITIONING SYSTEM
[A/C-01]
REF. TO CRUISE CONTROL SYSTEM
[C/C-02]
REF. TO PUSH BUTTON START SYSTEM
[P/S-02][P/S-03]
B
RB
4
3
R58
GR
RG
RL
BR
YG
LOr
WY
Lg
Y
GrW
B
G
*1
WG
D27
B19
B11
B12
D8
B35
D23
D3
D7
D30
B32
B15
B25
D17
B
E
M
B: B135 D: B137 ECM
REF. TO GND
[GND-05]
FUEL PUMP
FUEL PUMP ASSY

R58 (GRAY)
B97
B: B135
D: B137
B564 (BLACK)
RELAY HOLDER

WI-48087

E/G(P)-02

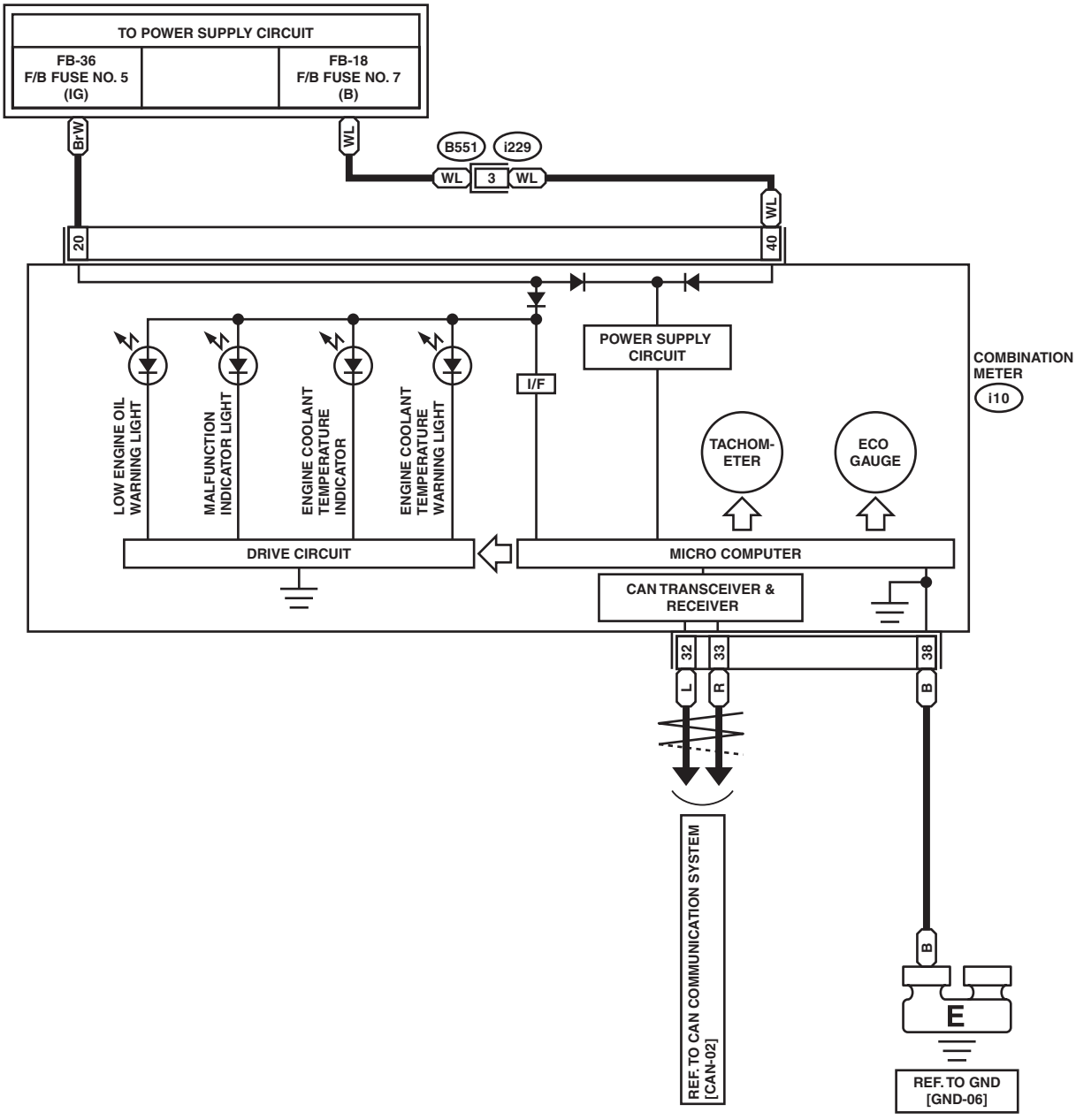

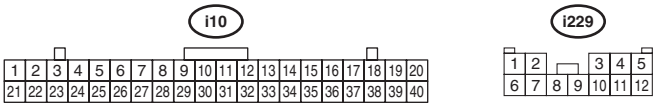

WI-41863

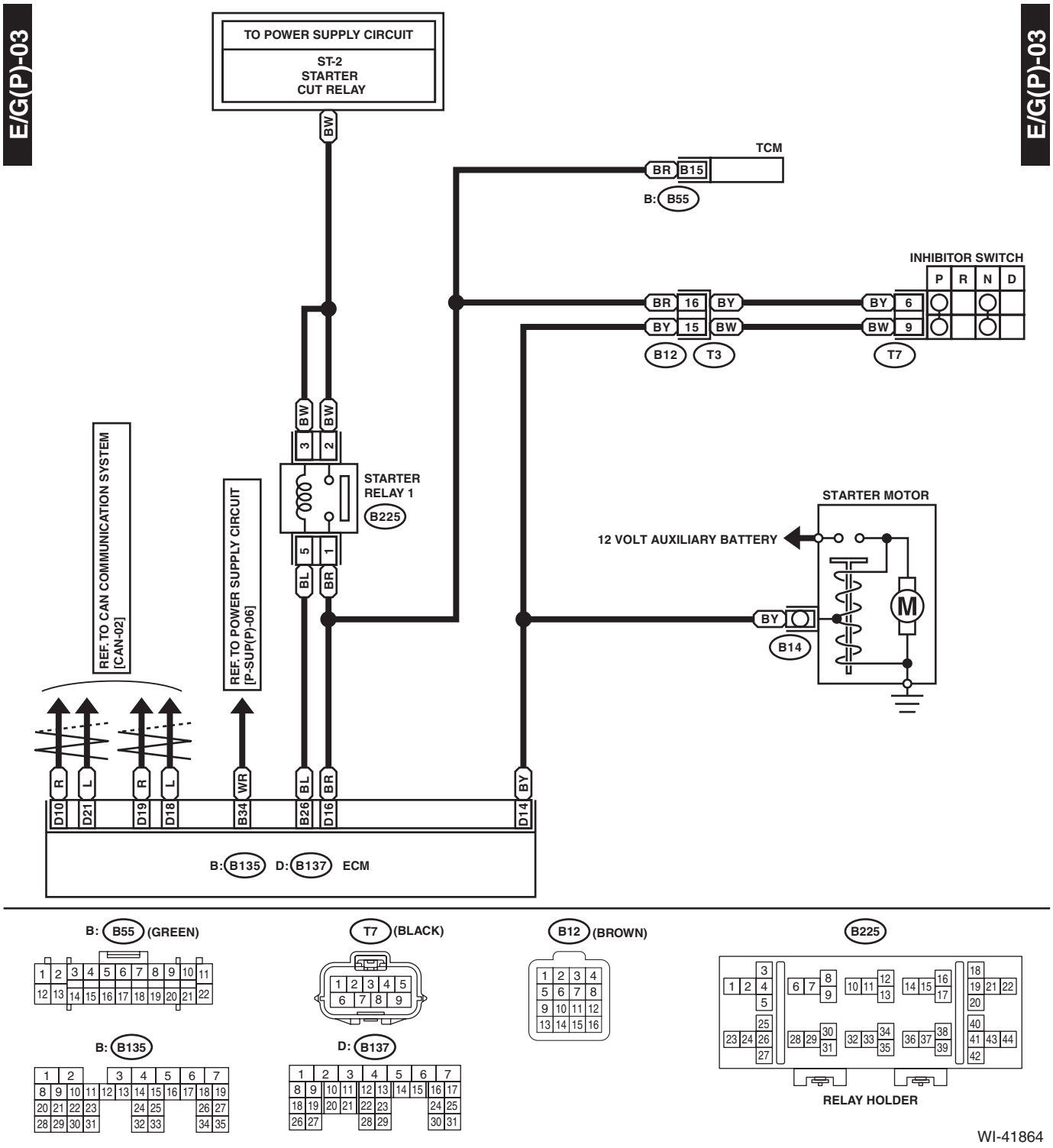
E/G(P)-03
E/G(P)-03
TO POWER SUPPLY CIRCUIT
ST-2
STARTER
CUT RELAY
BW
TCM
BR B15
B: B55
INHIBITOR SWITCH
P R N D
BR 16 BY
BY 15 BW
BY 6
BW 9
B12 T3
T7
BW BW
3 2
STARTER
RELAY 1
B225
5 1
BL BR
STARTER MOTOR
12 VOLT AUXILIARY BATTERY
BY
B14
M
REF. TO CAN COMMUNICATION SYSTEM
[CAN-02]
REF. TO POWER SUPPLY CIRCUIT
[P-SUP(P)-06]
R L R L WR BL BR BY
D10 D21 D19 D18 B34 B26 D16 D14
B: B135 D: B137 ECM

B: B55 (GREEN)
T7 (BLACK)
B12 (BROWN)
B225
B: B135
D: B137
RELAY HOLDER

WI-41864

E/G(P)-04

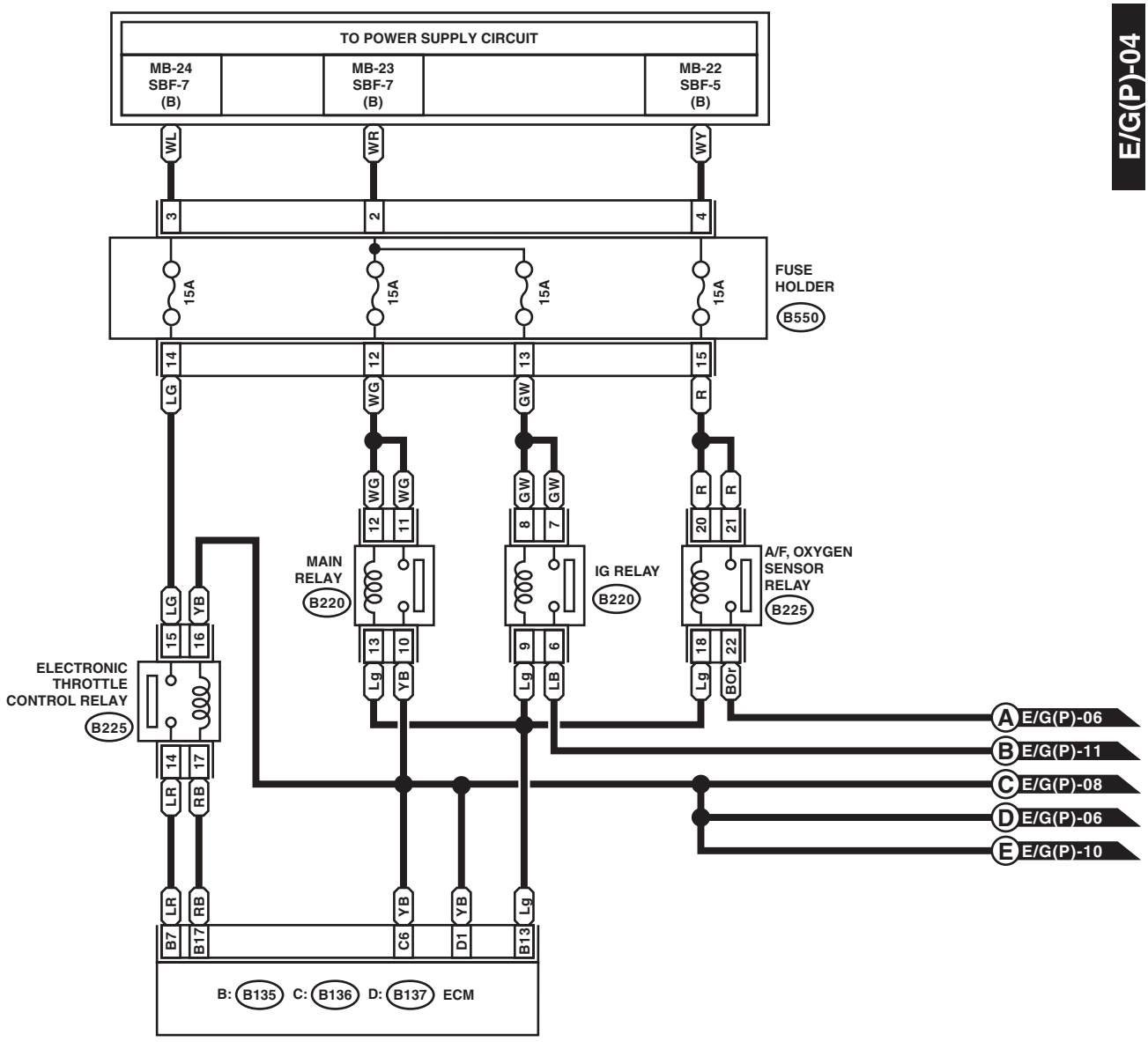

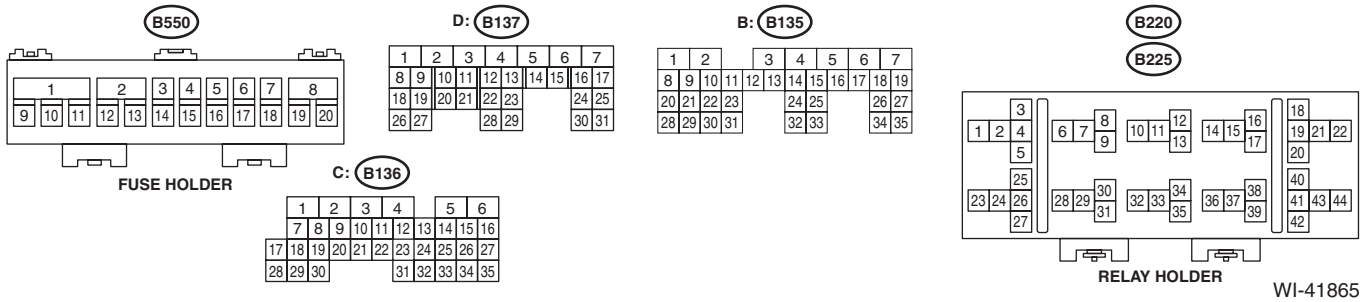

WI-41865

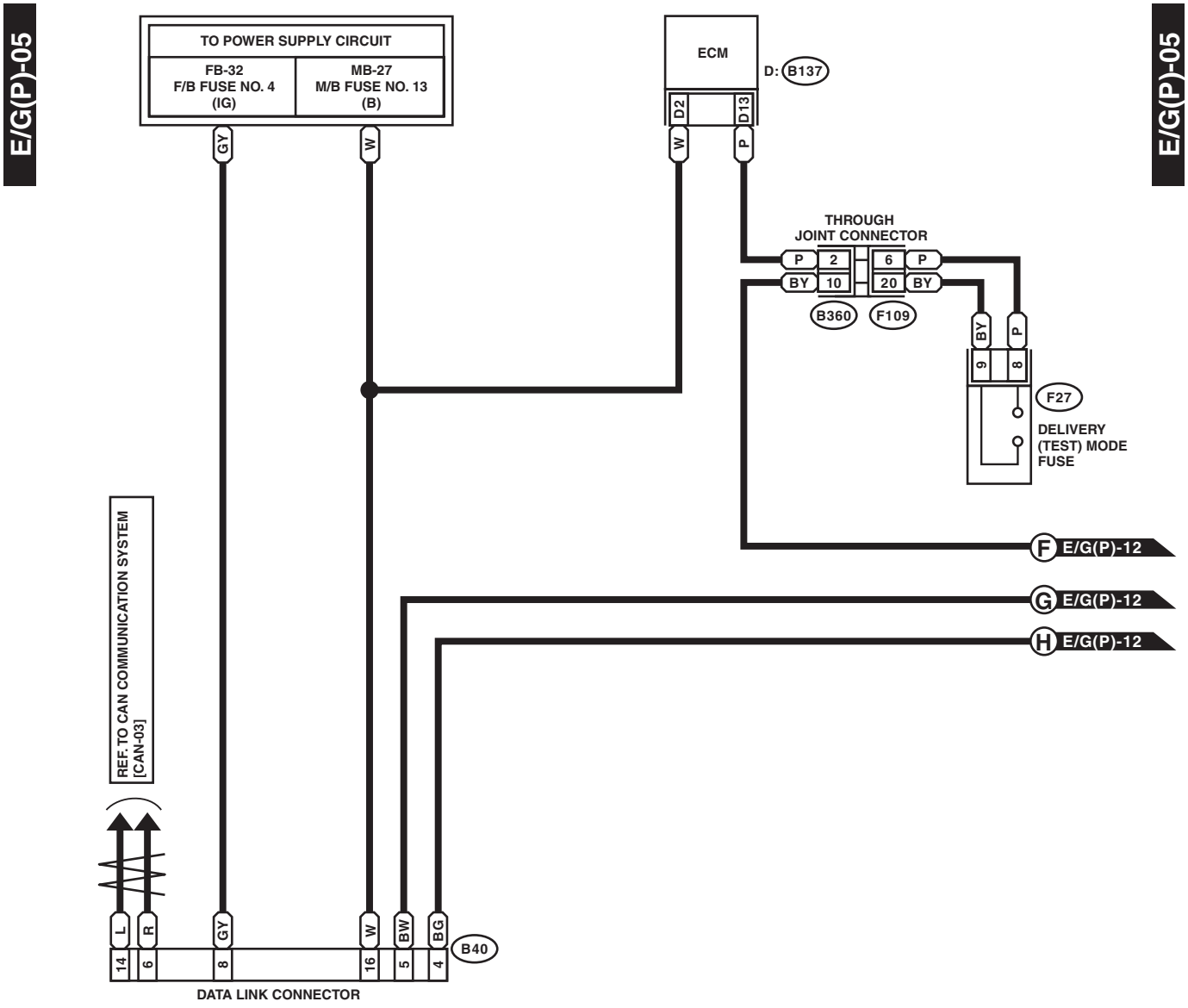
E/G(P)-05
E/G(P)-05
TO POWER SUPPLY CIRCUIT
FB-32
F/B FUSE NO. 4
(IG)
MB-27
M/B FUSE NO. 13
(B)
ECM
D: B137
D2
D13
GY
W
W
P
THROUGH
JOINT CONNECTOR
P
2
6
P
BY
10
20
BY
B360
F109
BY
P
9
8
F27
DELIVERY
(TEST) MODE
FUSE
F E/G(P)-12
G E/G(P)-12
H E/G(P)-12
REF. TO CAN COMMUNICATION SYSTEM
[CAN-03]
L
R
GY
W
BW
BG
B40
14
6
8
16
5
4
DATA LINK CONNECTOR

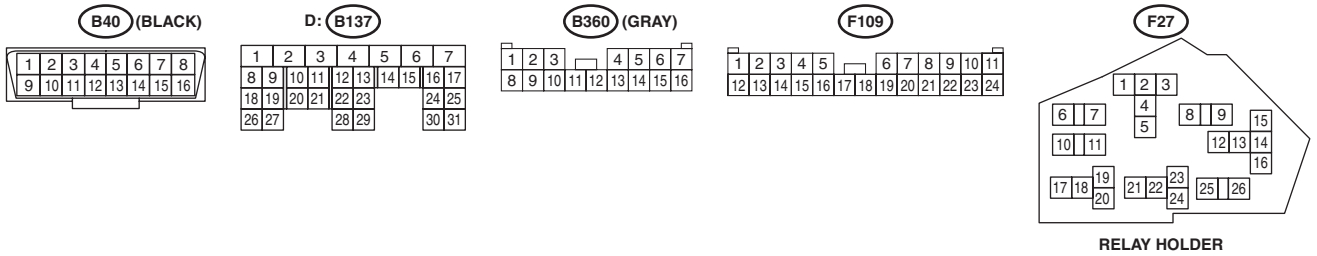
B40 (BLACK)
D: B137
B360 (GRAY)
F109
F27
RELAY HOLDER

WI-41866

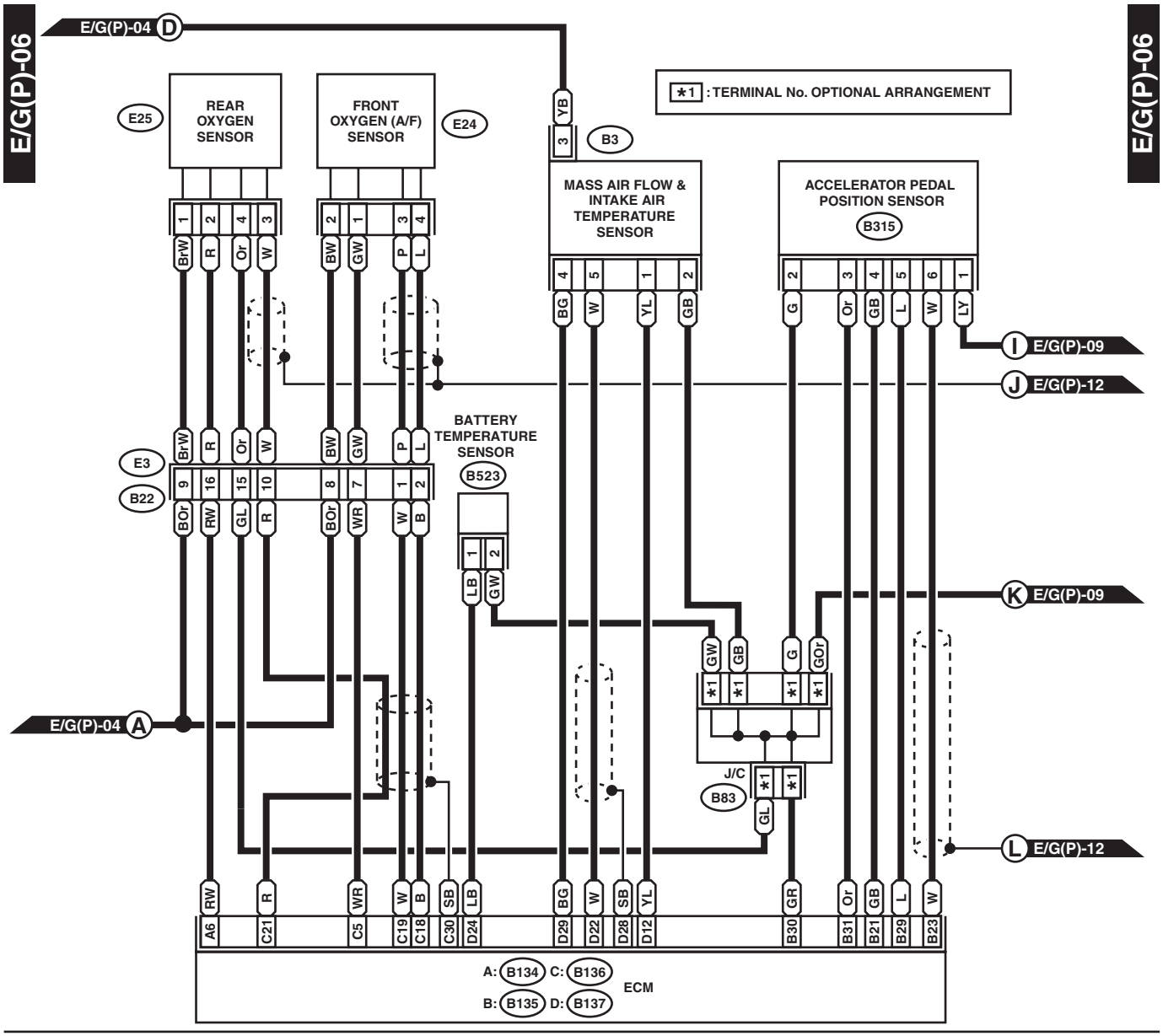
E/G(P)-06
E/G(P)-04 D
E25
REAR OXYGEN SENSOR
FRONT OXYGEN (A/F) SENSOR
E24
*1 : TERMINAL No. OPTIONAL ARRANGEMENT
B3
MASS AIR FLOW & INTAKE AIR TEMPERATURE SENSOR
ACCELERATOR PEDAL POSITION SENSOR
B315
I E/G(P)-09
J E/G(P)-12
BATTERY TEMPERATURE SENSOR
B523
E3
B22
K E/G(P)-09
E/G(P)-04 A
J/C
B83
L E/G(P)-12
A6
C21
C5
C19
C18
C30
D24
D29
D22
D28
D12
B30
B31
B21
B29
B23
A: B134 C: B136
B: B135 D: B137
ECM

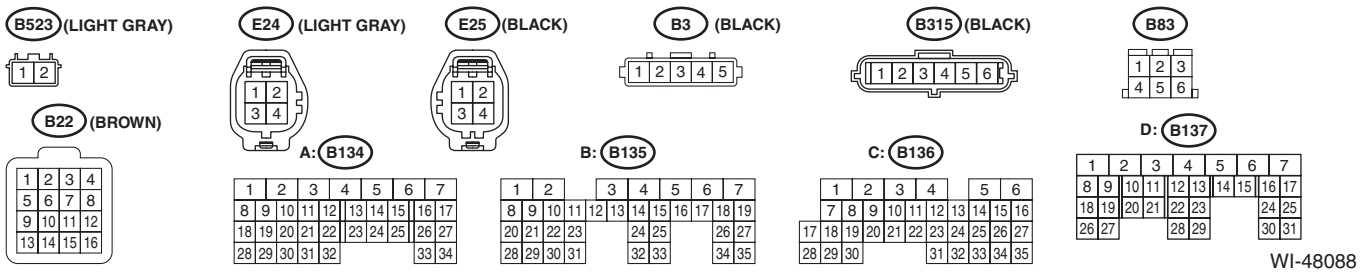
B523 (LIGHT GRAY)
B22 (BROWN)
E24 (LIGHT GRAY)
A: B134
E25 (BLACK)
B3 (BLACK)
B: B135
B315 (BLACK)
C: B136
B83
D: B137

WI-48088

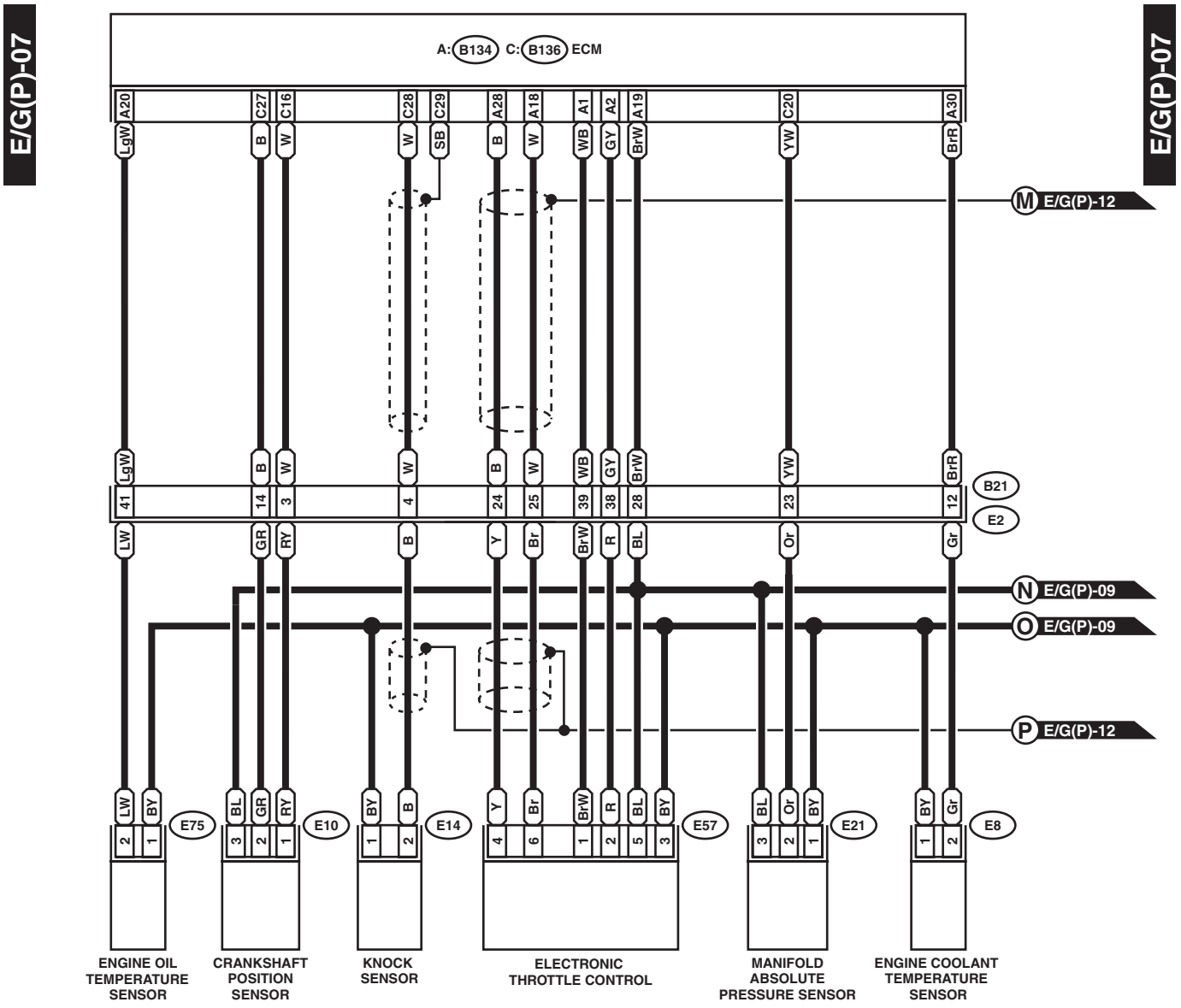
E/G(P)-07
E/G(P)-07
A: B134 C: B136 ECM
A20 C27 C16 C28 C29 A28 A18 A1 A2 A19 C20 A30
LgW B W W SB B W WB GY BrW YW BrR
M E/G(P)-12
41 14 3 4 24 25 39 38 28 23 12
B21
E2
LW GR RY B Y Br BrW R BL Or Gr
N E/G(P)-09
O E/G(P)-09
P E/G(P)-12
LW BY E75
BL GR RY E10
BY B E14
Y Br BrW R BL BY E57
BL Or BY E21
BY Gr E8
ENGINE OIL TEMPERATURE SENSOR
CRANKSHAFT POSITION SENSOR
KNOCK SENSOR
ELECTRONIC THROTTLE CONTROL
MANIFOLD ABSOLUTE PRESSURE SENSOR
ENGINE COOLANT TEMPERATURE SENSOR

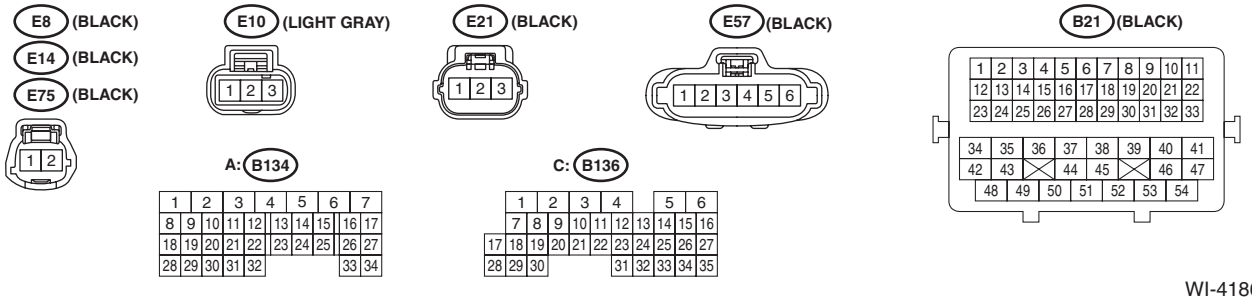
E8 (BLACK)
E14 (BLACK)
E75 (BLACK)
E10 (LIGHT GRAY)
E21 (BLACK)
E57 (BLACK)
B21 (BLACK)
A: B134
C: B136

WI-41868

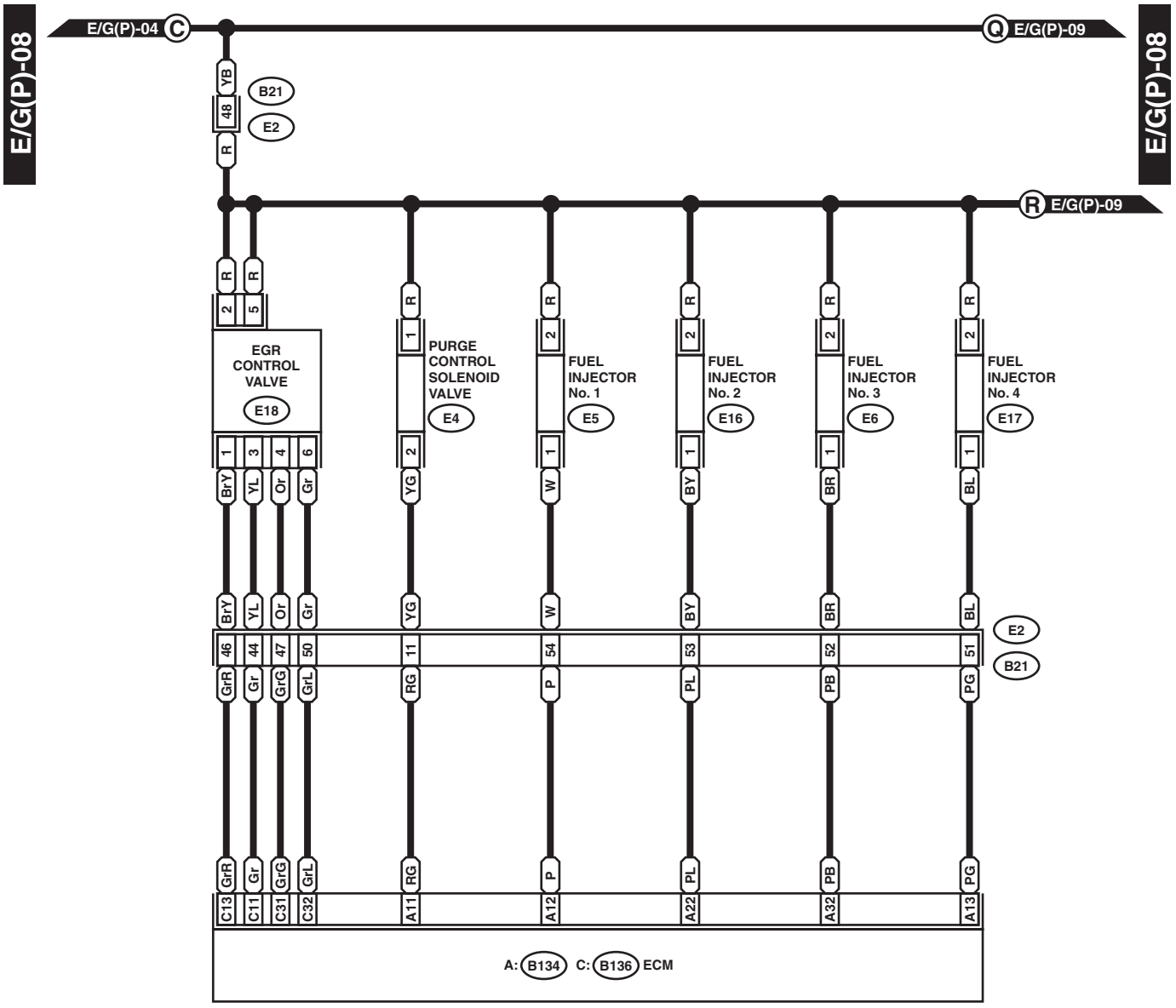
E/G(P)-08
E/G(P)-04 C
Q E/G(P)-09
E/G(P)-08
YB
48
B21
E2
R
R E/G(P)-09
R
2
5
EGR CONTROL VALVE
E18
1
3
4
6
BrY
YL
Or
Gr
PURGE CONTROL SOLENOID VALVE
E4
FUEL INJECTOR No. 1
E5
FUEL INJECTOR No. 2
E16
FUEL INJECTOR No. 3
E6
FUEL INJECTOR No. 4
E17
YG
W
BY
BR
BL
E2
B21
46
44
47
50
11
54
53
52
51
GrR
Gr
GrG
GrL
RG
P
PL
PB
PG
C13
C11
C31
C32
A11
A12
A22
A32
A13
A: B134 C: B136 ECM

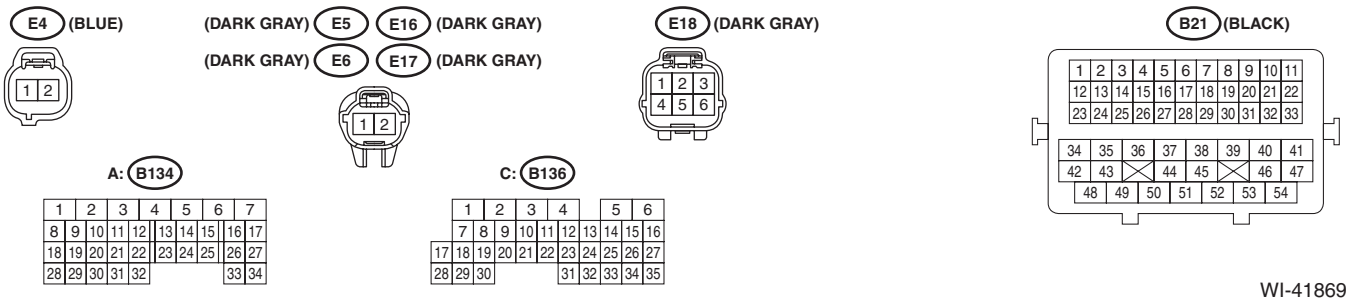
E4 (BLUE)
(DARK GRAY) E5 E16 (DARK GRAY)
(DARK GRAY) E6 E17 (DARK GRAY)
E18 (DARK GRAY)
B21 (BLACK)
A: B134
C: B136

WI-41869

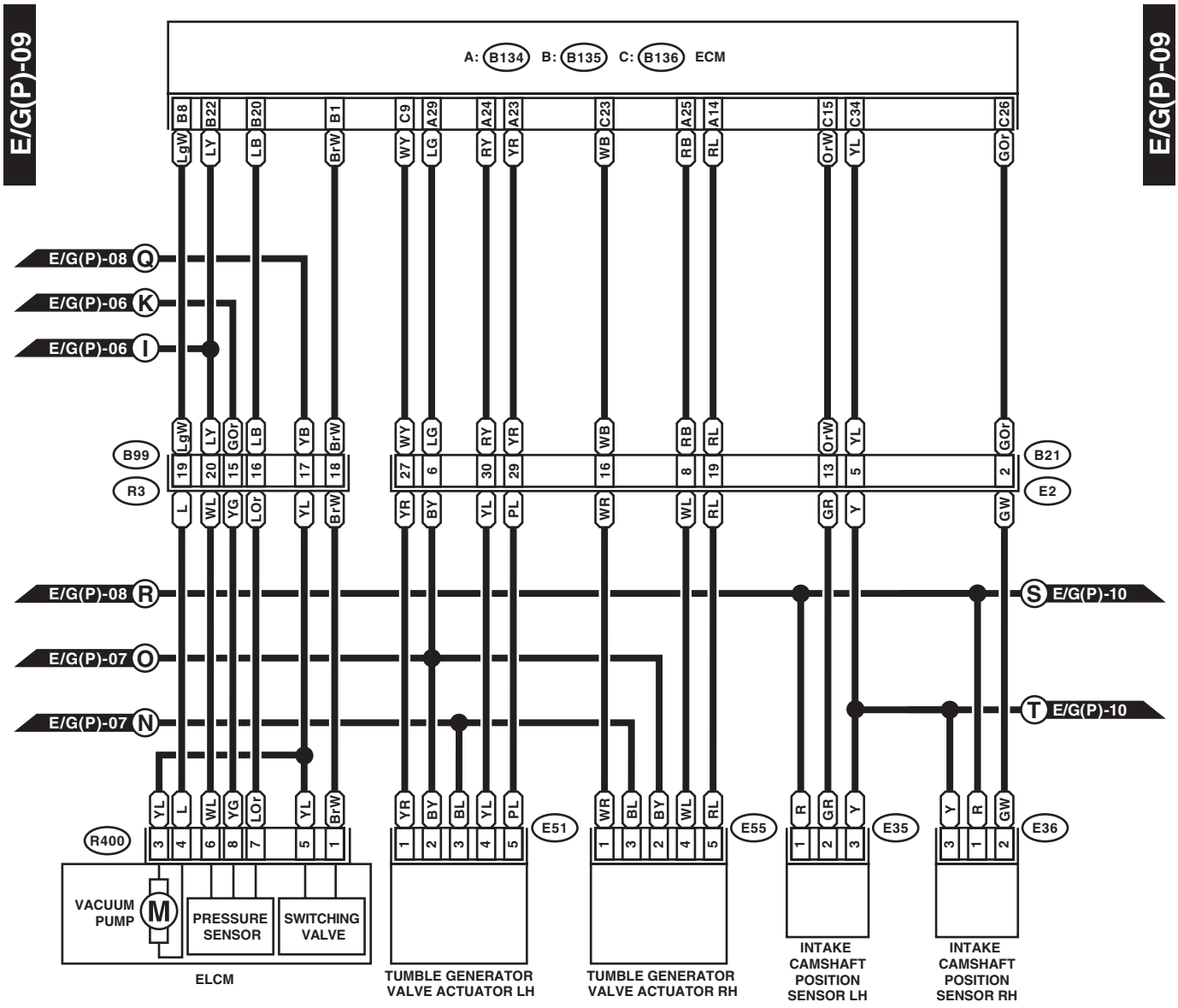
E/G(P)-09
E/G(P)-09
A: B134 B: B135 C: B136 ECM
B8 B22 B20 B1 C9 A29 A24 A23 C23 A25 A14 C15 C34 C26
LgW LY LB BrW WY LG RY YR WB RB RL OrW YL GOr
E/G(P)-08 Q
E/G(P)-06 K
E/G(P)-06 I
B99
R3
19 20 15 16 17 18
27 6 30 29 16 8 19 13 5 2
B21
E2
L WL YG LOr YL BrW YR BY YL PL WR WL RL GR Y GW
E/G(P)-08 R
E/G(P)-07 O
E/G(P)-07 N
S E/G(P)-10
T E/G(P)-10
YL L WL YG LOr YL BrW YR BY BL YL PL WR BL BY WL RL R GR Y Y R GW
R400
3 4 6 8 7 5 1
1 2 3 4 5
1 2 3 1 2 3 1 2 3
E51
E55
E35
E36
VACUUM PUMP
M
PRESSURE SENSOR
SWITCHING VALVE
ELCM
TUMBLE GENERATOR VALVE ACTUATOR LH
TUMBLE GENERATOR VALVE ACTUATOR RH
INTAKE CAMSHAFT POSITION SENSOR LH
INTAKE CAMSHAFT POSITION SENSOR RH

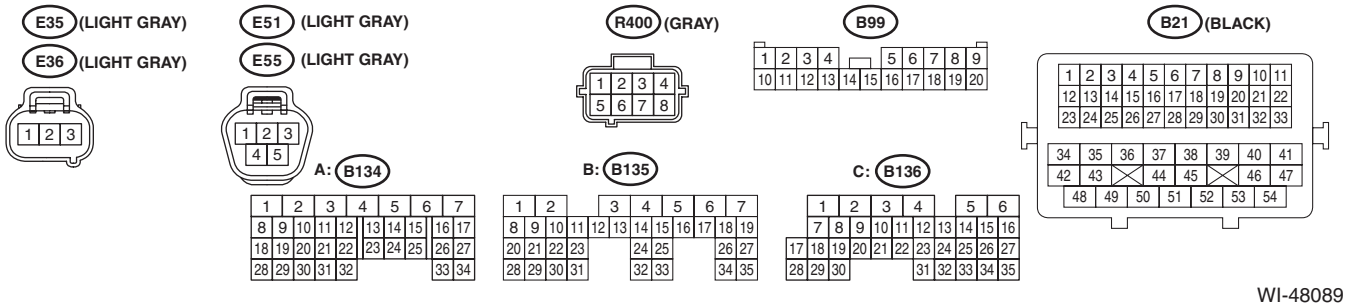
E35 (LIGHT GRAY)
E36 (LIGHT GRAY)
E51 (LIGHT GRAY)
E55 (LIGHT GRAY)
R400 (GRAY)
B99
B21 (BLACK)
A: B134
B: B135
C: B136

WI-48089

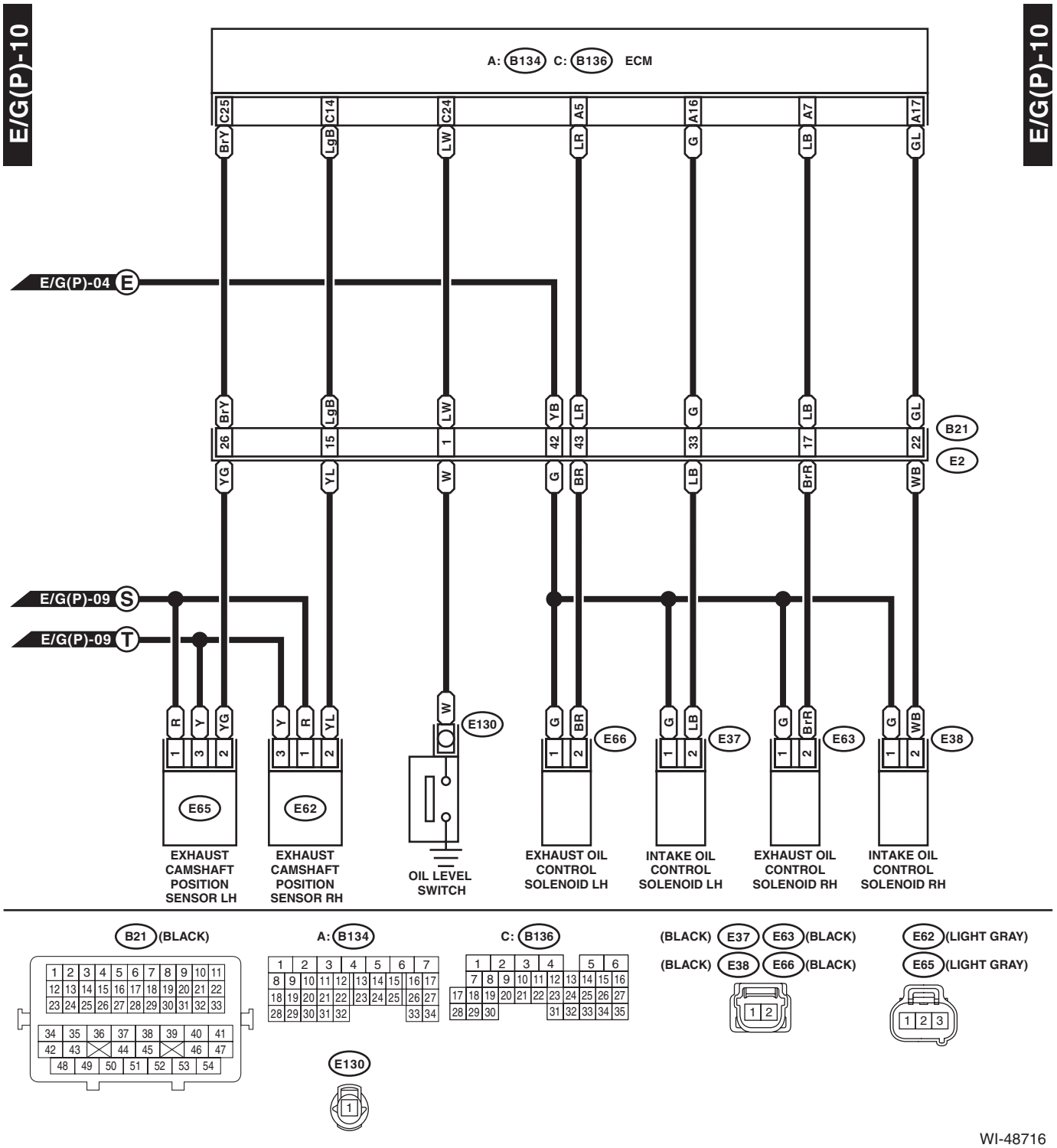
E/G(P)-10
E/G(P)-10
A: B134 C: B136 ECM
C25
C14
C24
A5
A16
A7
A17
BrY
LgB
LW
LR
G
LB
GL
E/G(P)-04 E
BrY
LgB
LW
YB
LR
G
LB
GL
26
15
1
42
43
33
17
22
B21
E2
YG
YL
W
G
BR
LB
BrR
WB
E/G(P)-09 S
E/G(P)-09 T
R
Y
YG
Y
R
YL
W
G
BR
G
LB
G
BrR
G
WB
1
3
2
3
1
2
E130
E66
E37
E63
E38
E65
E62
EXHAUST CAMSHAFT POSITION SENSOR LH
EXHAUST CAMSHAFT POSITION SENSOR RH
OIL LEVEL SWITCH
EXHAUST OIL CONTROL SOLENOID LH
INTAKE OIL CONTROL SOLENOID LH
EXHAUST OIL CONTROL SOLENOID RH
INTAKE OIL CONTROL SOLENOID RH

B21 (BLACK)
A: B134
C: B136
(BLACK) E37 E63 (BLACK)
(BLACK) E38 E66 (BLACK)
E62 (LIGHT GRAY)
E65 (LIGHT GRAY)
E130

WI-48716

E/G(P)-11

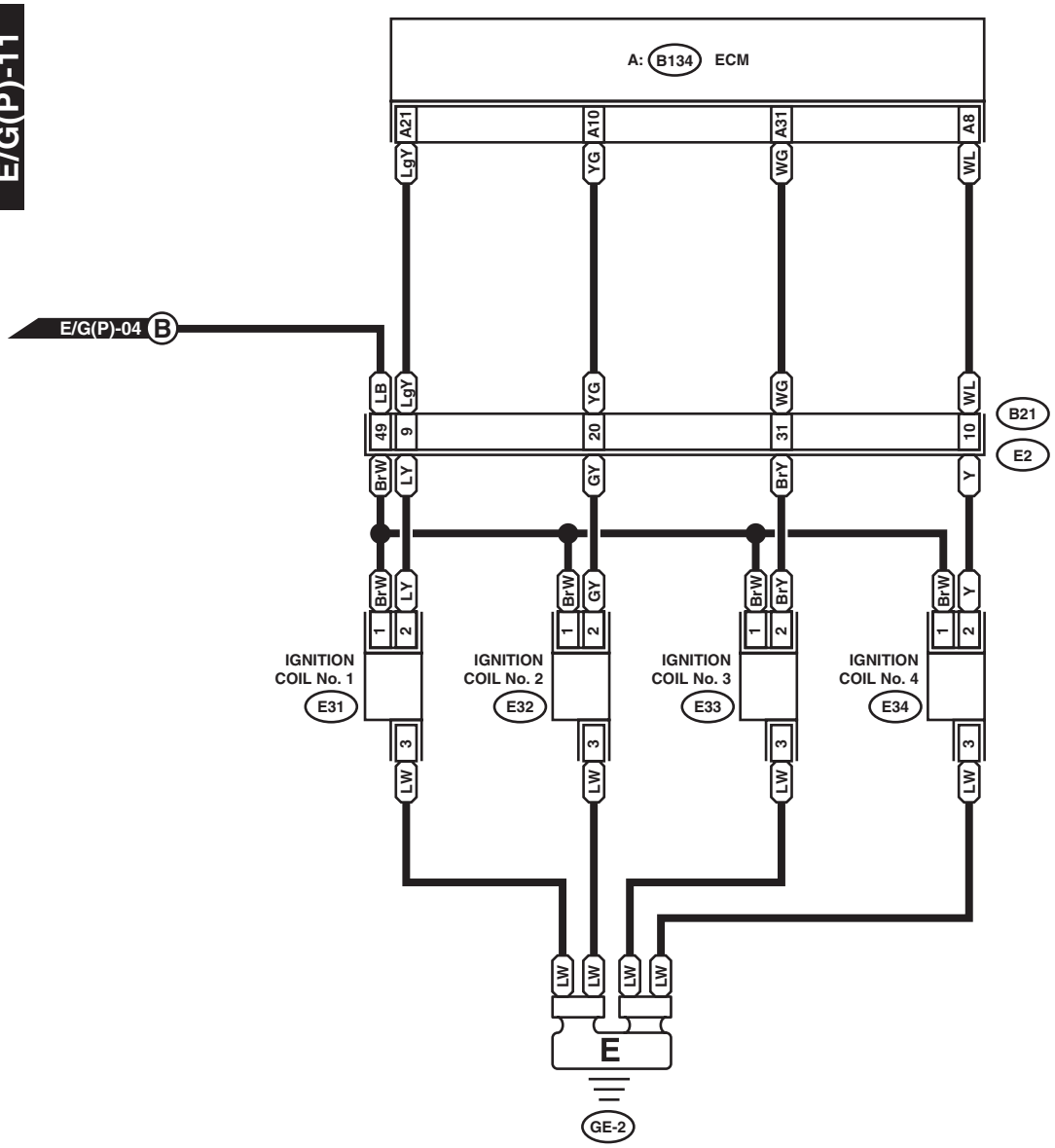

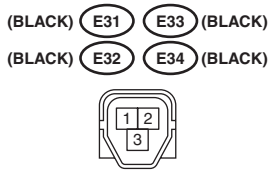

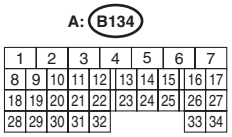

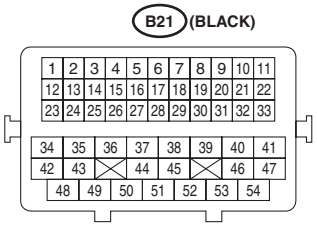

WI-48090

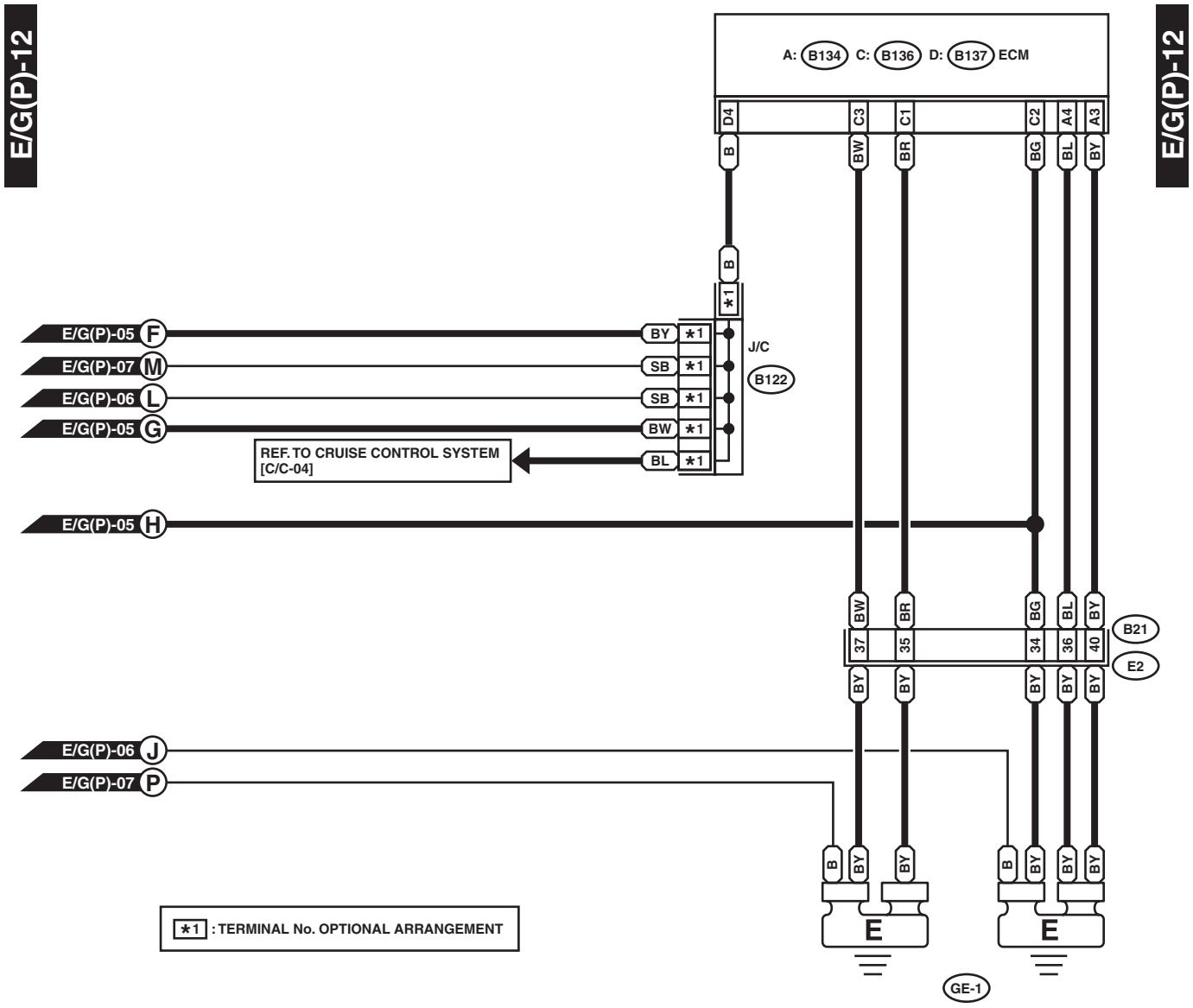
E/G(P)-12
E/G(P)-12
A: B134 C: B136 D: B137 ECM
D4
C3
C1
C2
A4
A3
B
BW
BR
BG
BL
BY
*1
J/C
B122
E/G(P)-05 F
E/G(P)-07 M
E/G(P)-06 L
E/G(P)-05 G
E/G(P)-05 H
E/G(P)-06 J
E/G(P)-07 P
SB
REF. TO CRUISE CONTROL SYSTEM [C/C-04]
37
35
34
36
40
B21
E2
E
GE-1
*1 : TERMINAL No. OPTIONAL ARRANGEMENT

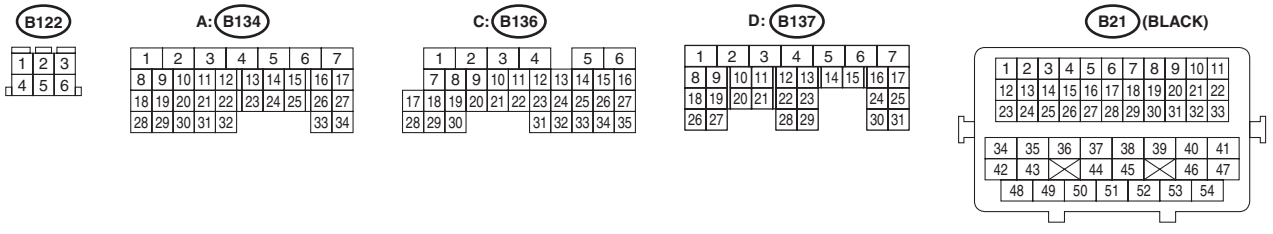
B122
A: B134
C: B136
D: B137
B21 (BLACK)

WI-41873

19.Front Accessory Power Supply Socket System

A: WIRING DIAGRAM

FAPS-01

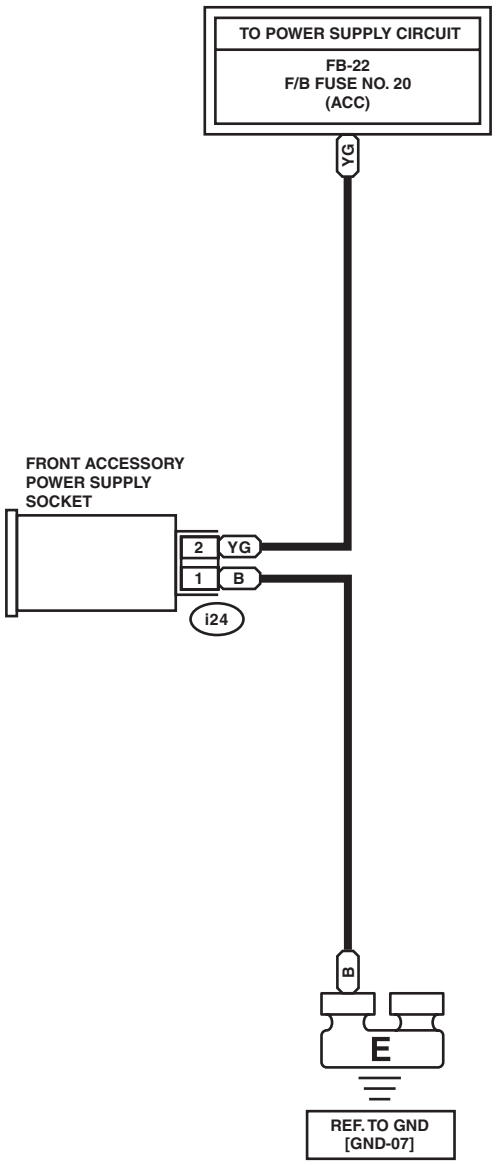

FAPS-01

WI-34207

20.Front Fog Light System

A: WIRING DIAGRAM

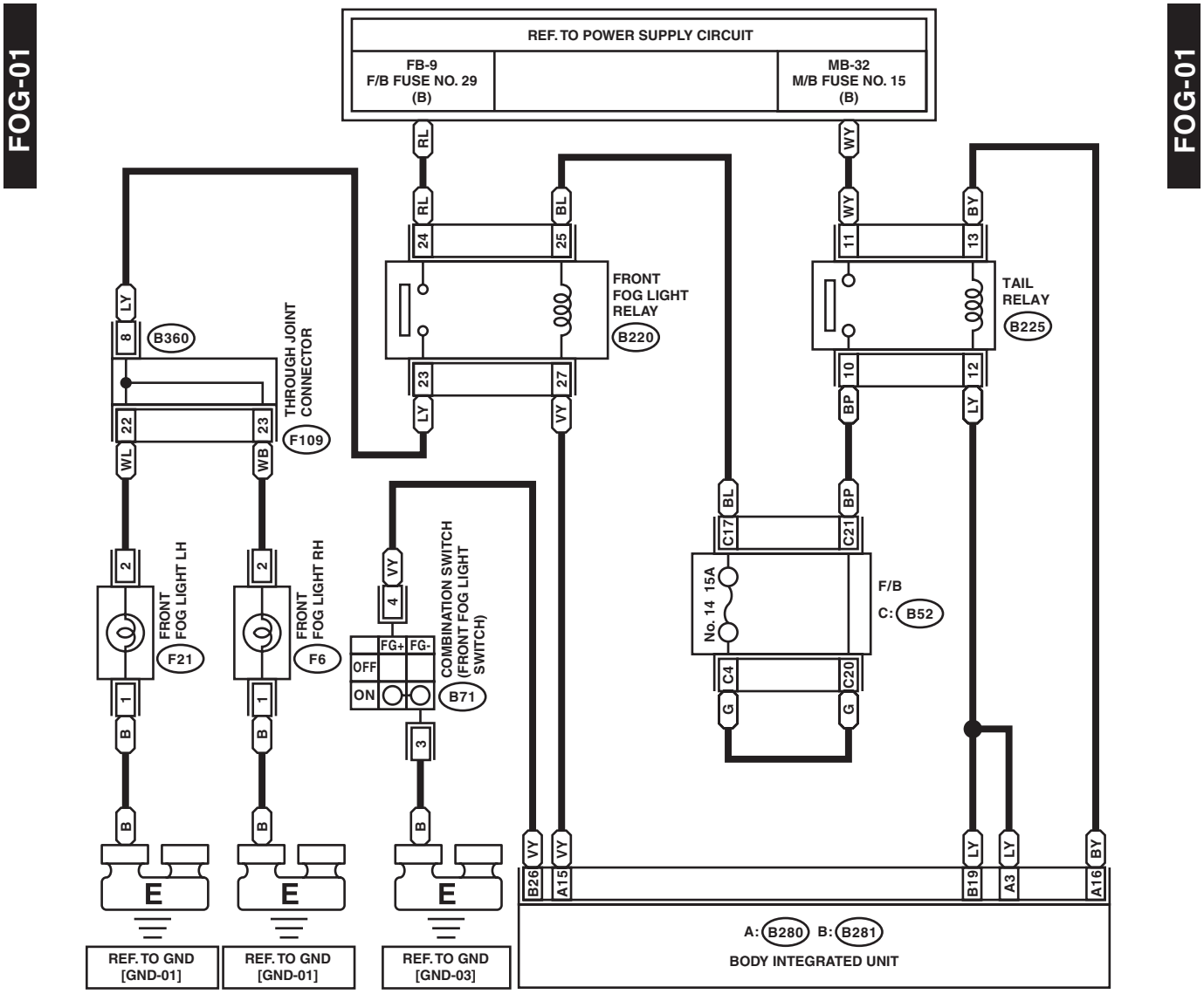

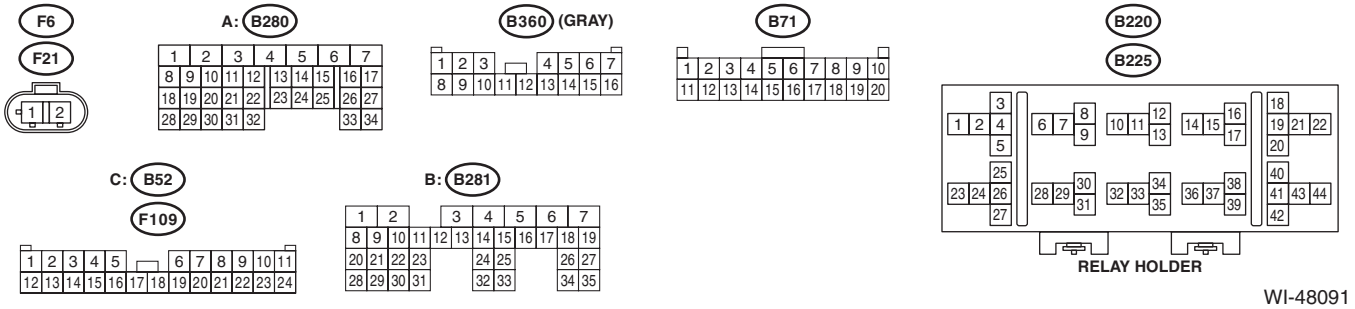

WI-48091

FOG-02

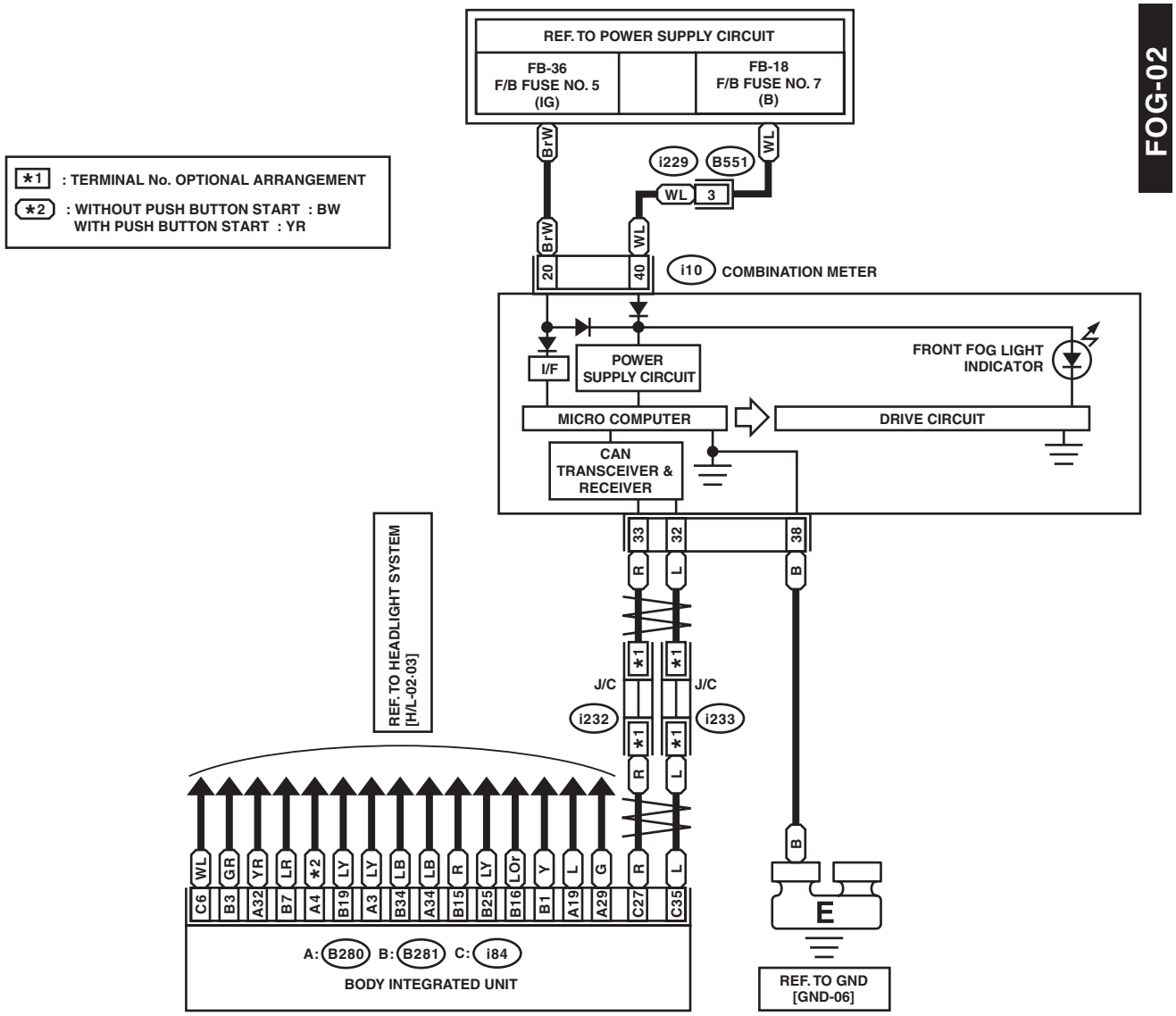

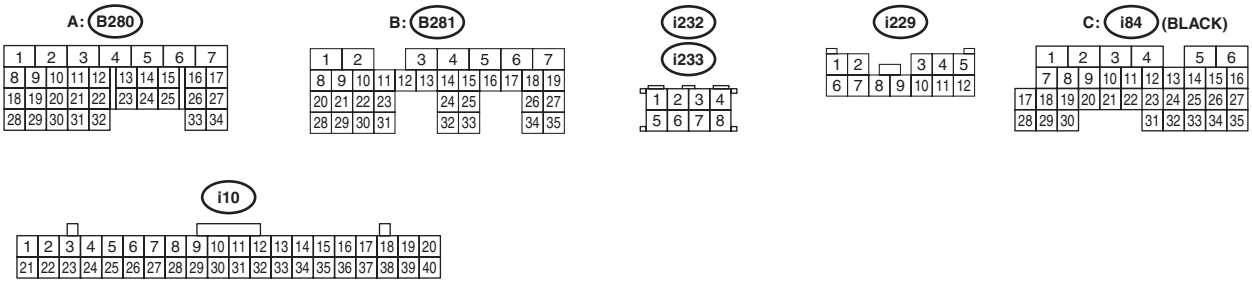

WI-48092

21.Front Wiper and Washer System

A: WIRING DIAGRAM

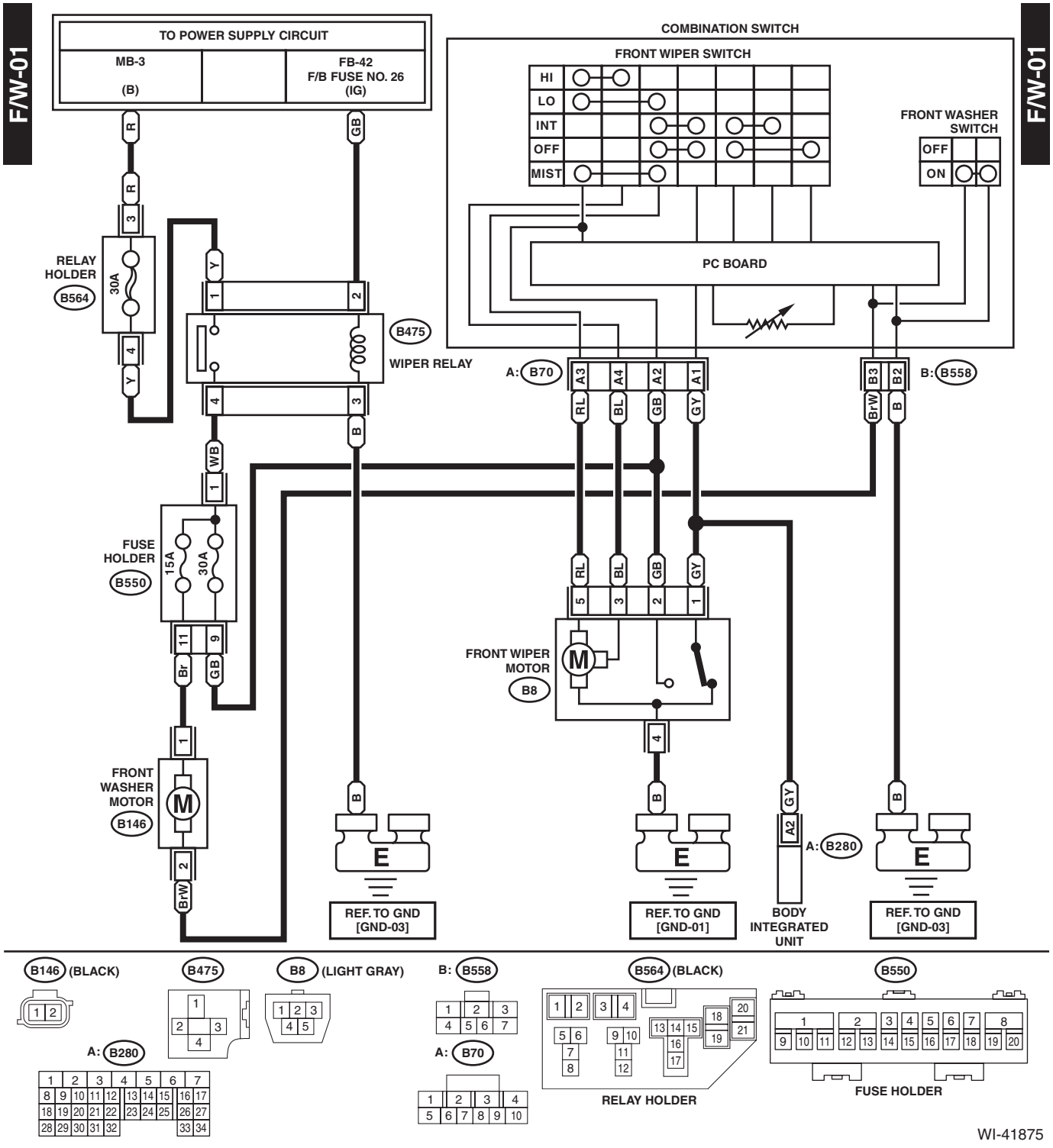

F/W-02

F/W-02

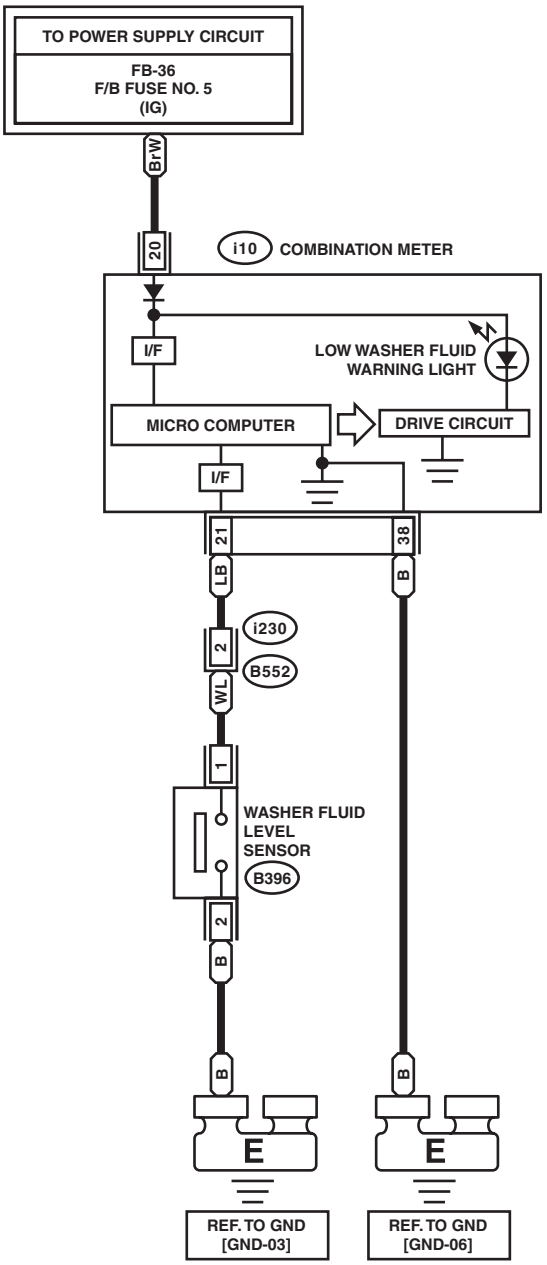

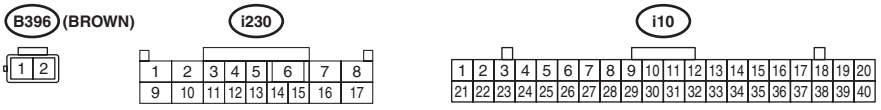

WI-41876

22.Fuel Gauge System

A: WIRING DIAGRAM

F/G-01

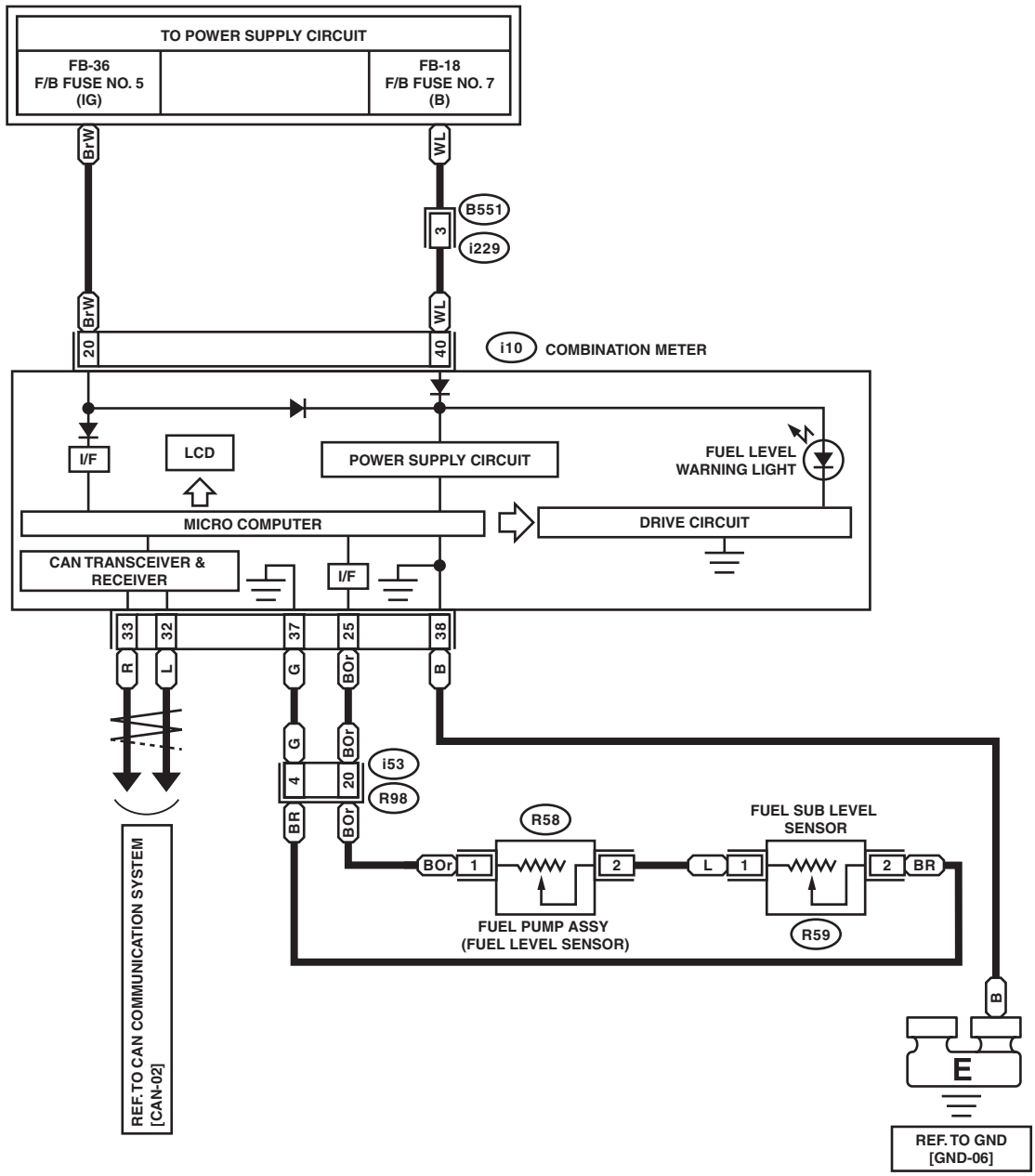

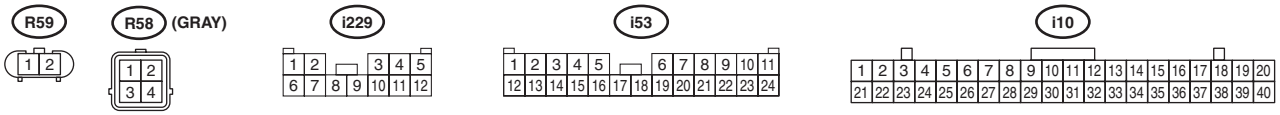

WI-41877

23.Headlight Beam Leveler System

A: WIRING DIAGRAM

HLBL-01

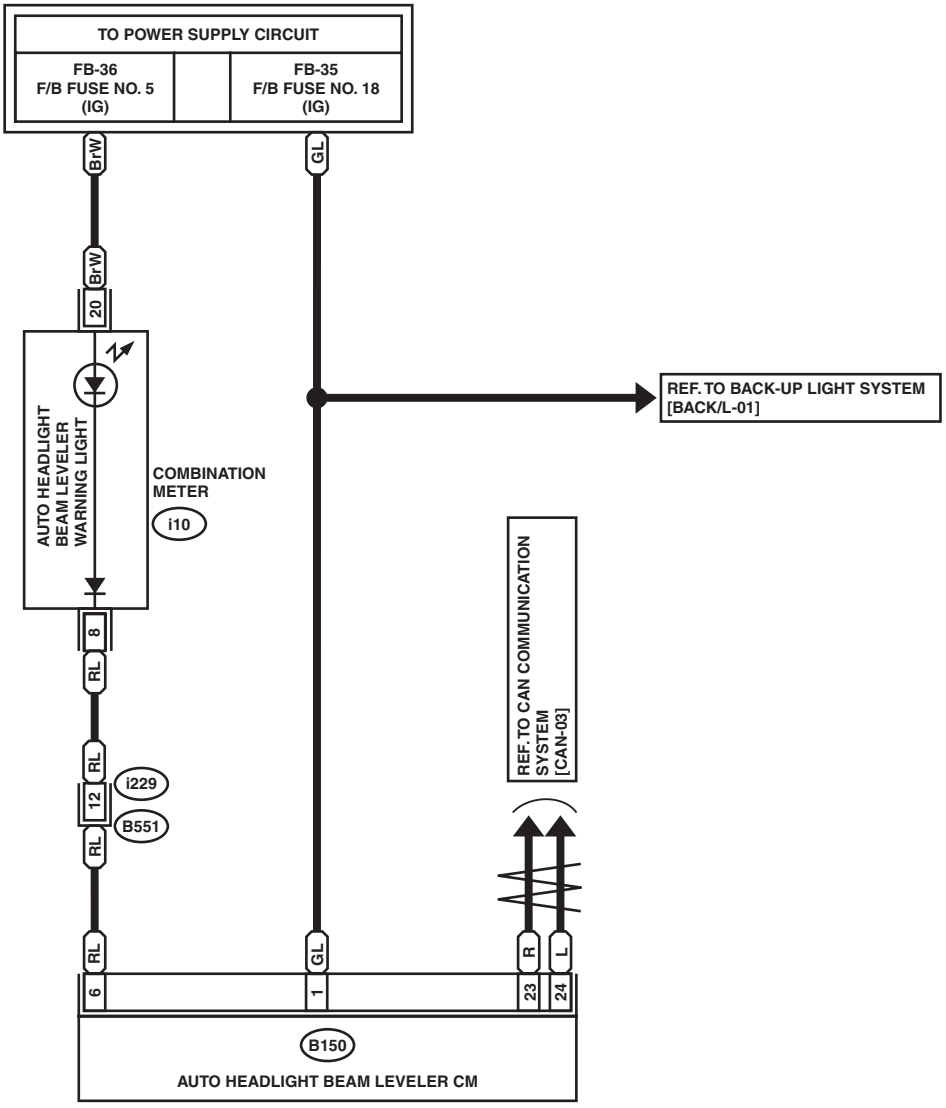

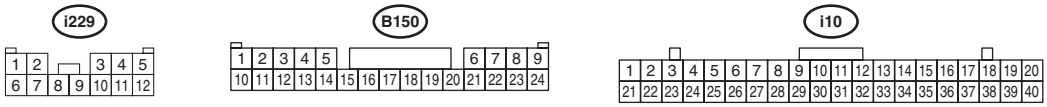

WI-41878

HLBL-02

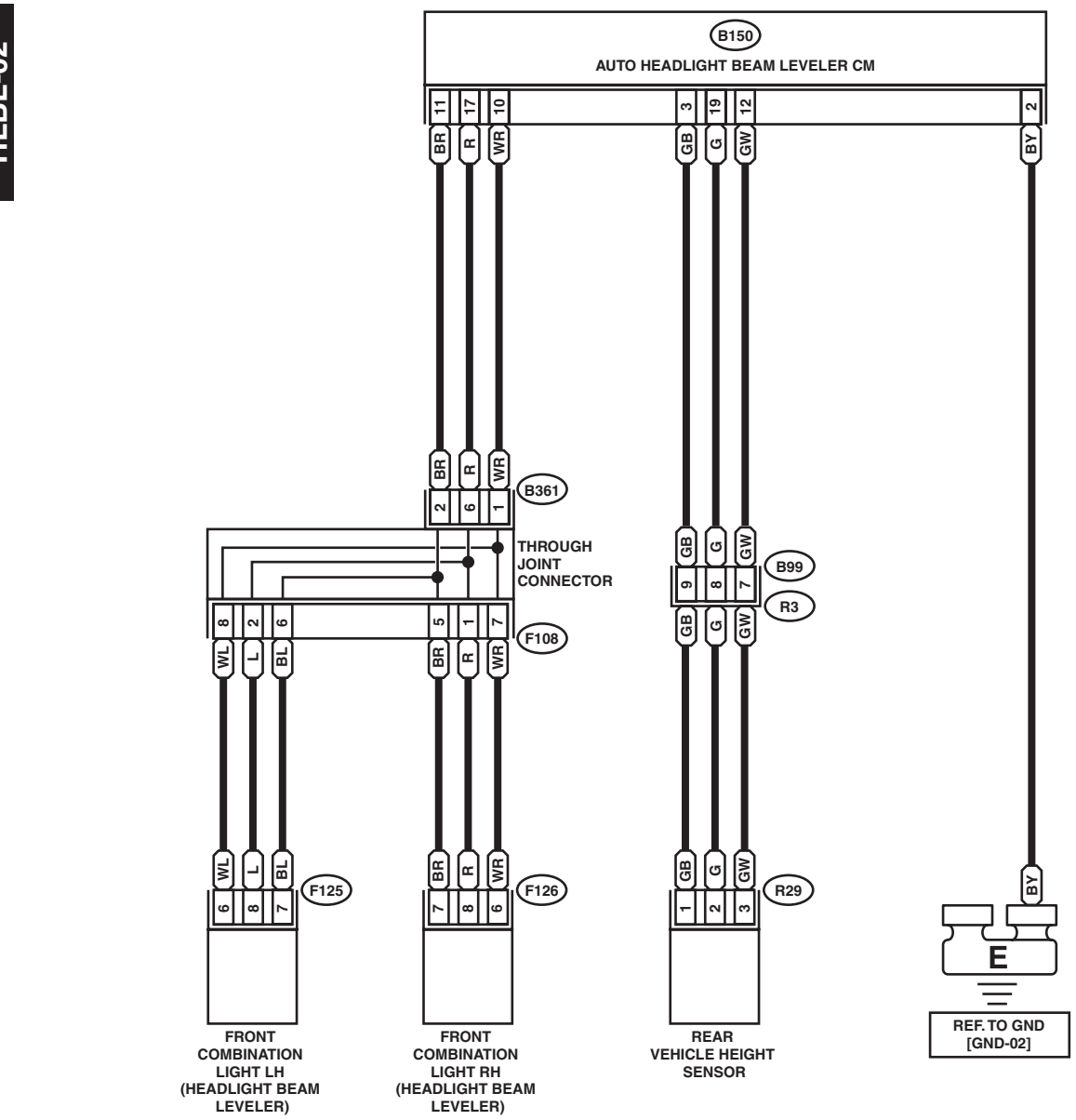

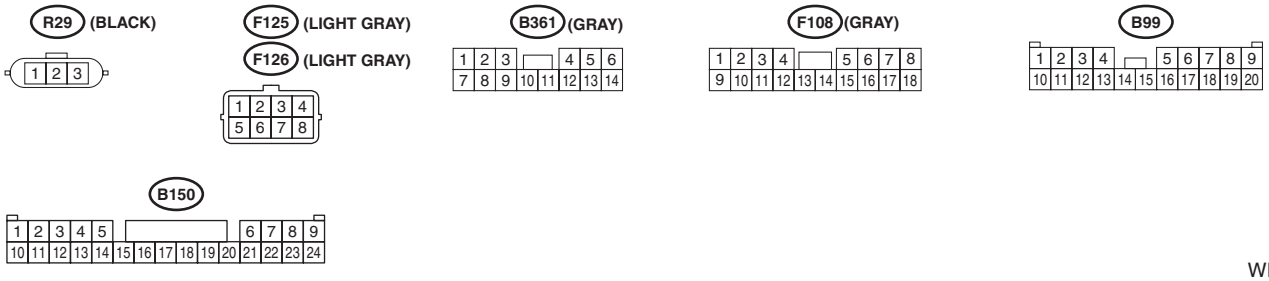

WI-37837

24.Headlight System

A: WIRING DIAGRAM

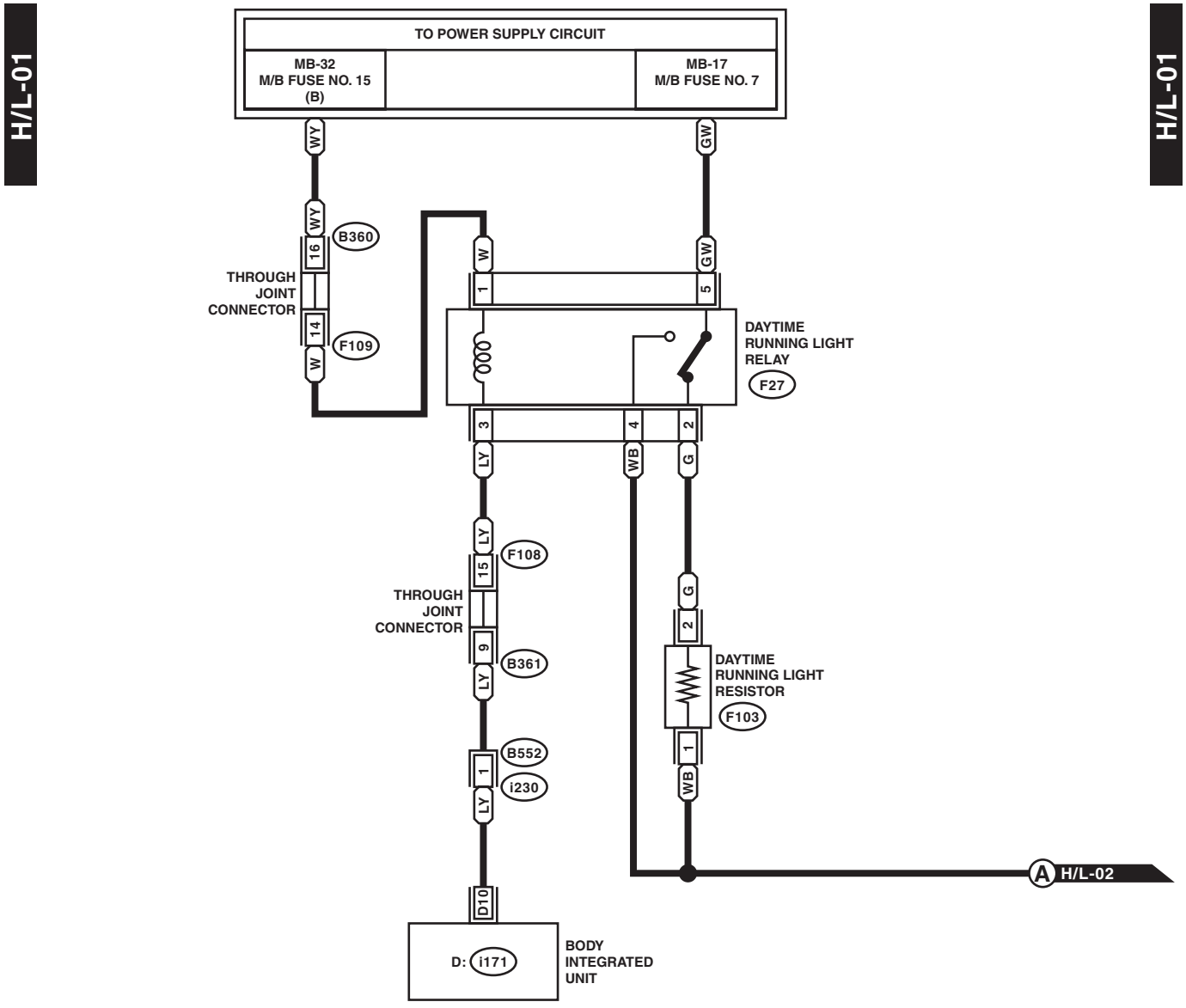

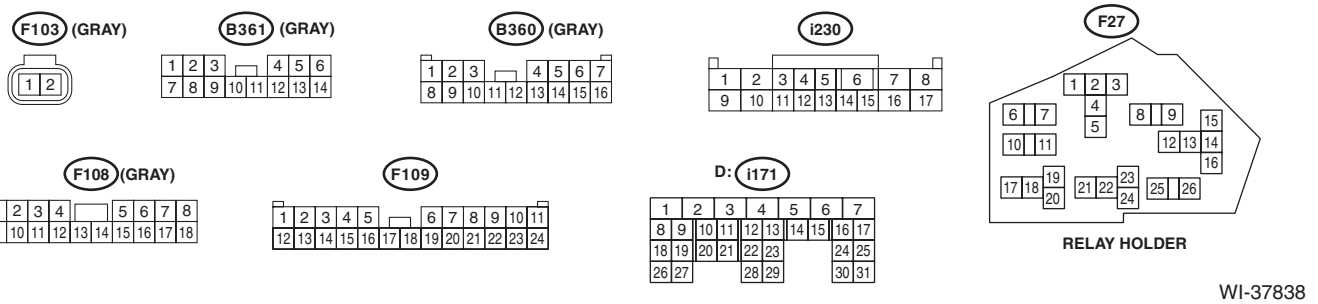

WI-37838

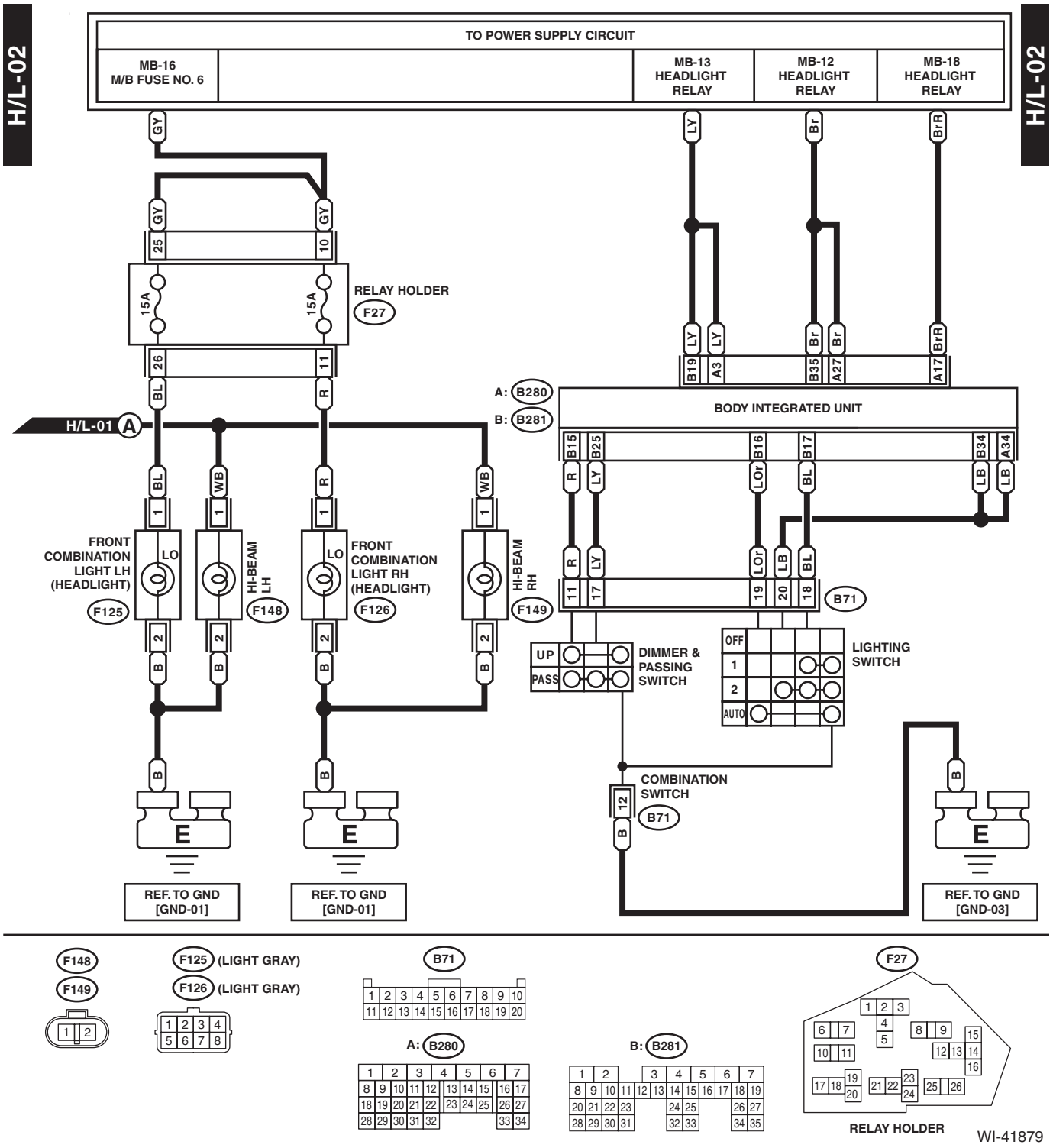
H/L-02
H/L-02
TO POWER SUPPLY CIRCUIT
MB-16 M/B FUSE NO. 6
MB-13 HEADLIGHT RELAY
MB-12 HEADLIGHT RELAY
MB-18 HEADLIGHT RELAY
RELAY HOLDER
F27
15A
15A
H/L-01 A
A: B280
B: B281
BODY INTEGRATED UNIT
FRONT COMBINATION LIGHT LH (HEADLIGHT)
F125
HI-BEAM LH
F148
FRONT COMBINATION LIGHT RH (HEADLIGHT)
F126
HI-BEAM RH
F149
LO
DIMMER & PASSING SWITCH
UP
PASS
LIGHTING SWITCH
OFF
1
2
AUTO
COMBINATION SWITCH
B71
REF. TO GND [GND-01]
REF. TO GND [GND-01]
REF. TO GND [GND-03]

F148
F149
F125 (LIGHT GRAY)
F126 (LIGHT GRAY)
B71
A: B280
B: B281
F27
RELAY HOLDER

WI-41879

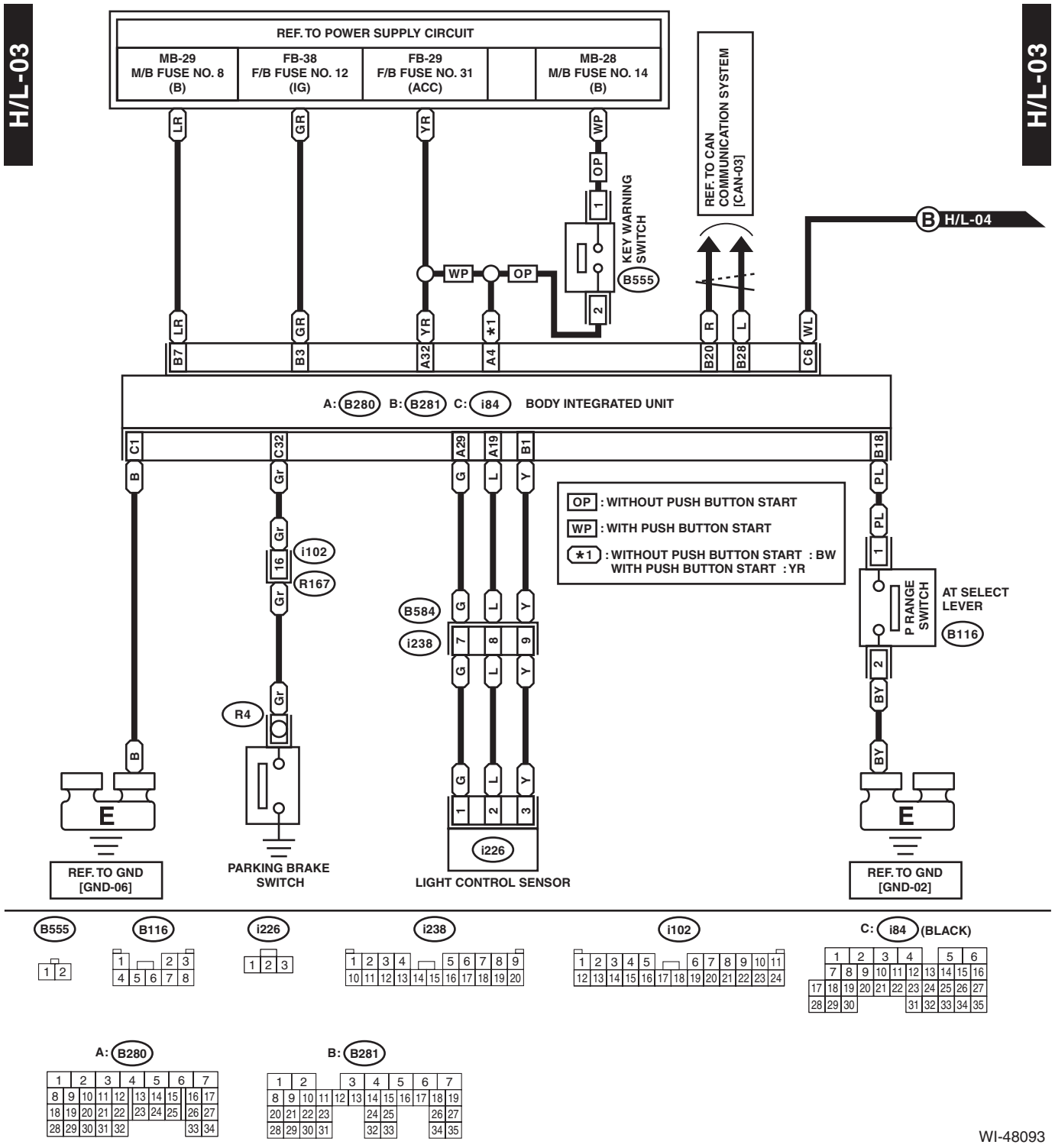
H/L-03
H/L-03
REF. TO POWER SUPPLY CIRCUIT
MB-29 M/B FUSE NO. 8 (B)
FB-38 F/B FUSE NO. 12 (IG)
FB-29 F/B FUSE NO. 31 (ACC)
MB-28 M/B FUSE NO. 14 (B)
REF. TO CAN COMMUNICATION SYSTEM [CAN-03]
B H/L-04
KEY WARNING SWITCH
B555
WP
OP
A: B280 B: B281 C: i84 BODY INTEGRATED UNIT
OP : WITHOUT PUSH BUTTON START
WP : WITH PUSH BUTTON START
*1 : WITHOUT PUSH BUTTON START : BW
WITH PUSH BUTTON START : YR
i102
R167
R4
B584
i238
i226
P RANGE SWITCH
AT SELECT LEVER
B116
REF. TO GND [GND-06]
PARKING BRAKE SWITCH
LIGHT CONTROL SENSOR
REF. TO GND [GND-02]
C: i84 (BLACK)
A: B280
B: B281
WI-48093

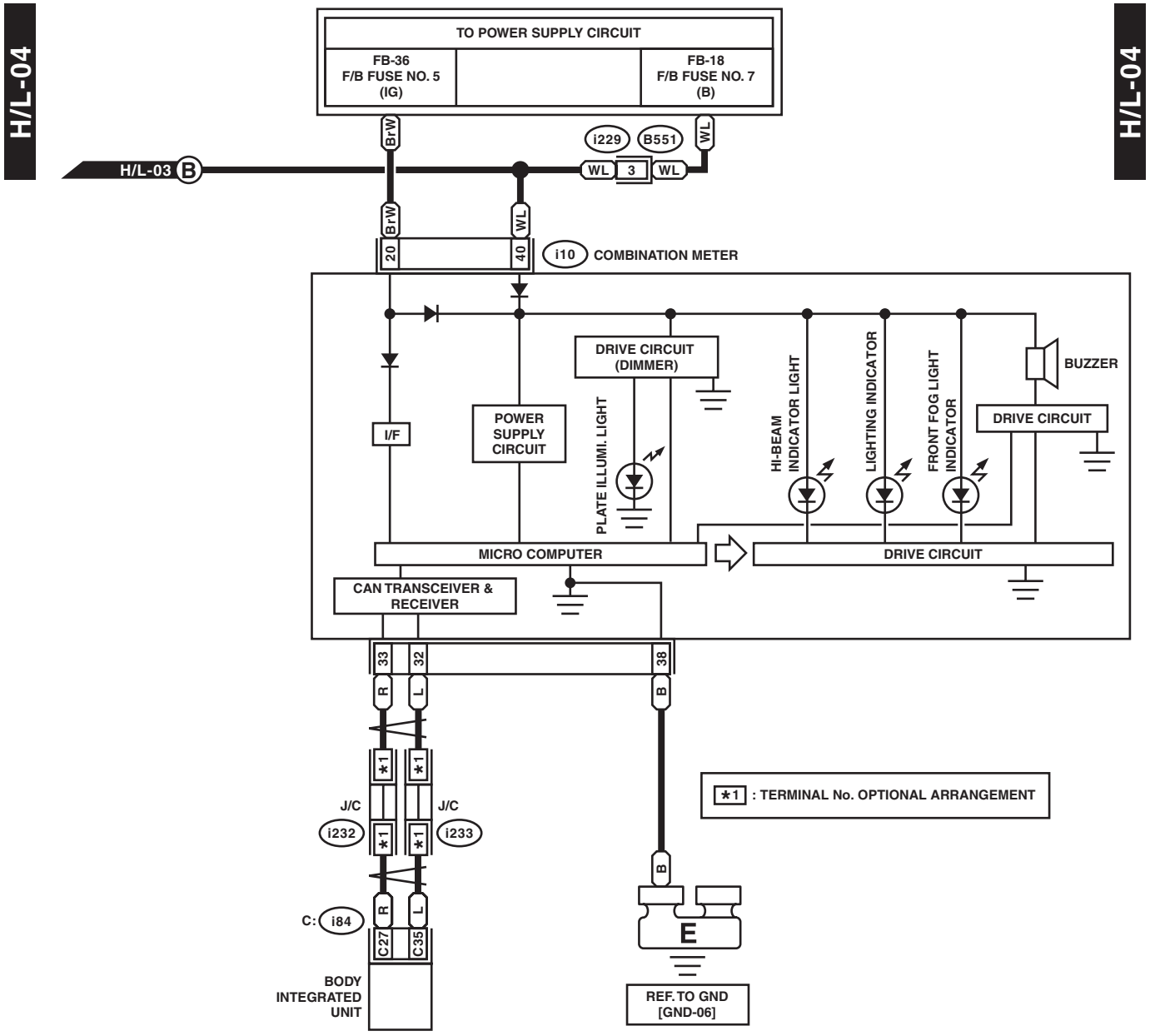
H/L-04
H/L-04
TO POWER SUPPLY CIRCUIT
FB-36
F/B FUSE NO. 5
(IG)
FB-18
F/B FUSE NO. 7
(B)
H/L-03 B
BrW
WL
i229
B551
WL
3
WL
BrW
WL
20
40
i10
COMBINATION METER
DRIVE CIRCUIT
(DIMMER)
BUZZER
I/F
POWER
SUPPLY
CIRCUIT
PLATE ILLUMI. LIGHT
HI-BEAM
INDICATOR LIGHT
LIGHTING INDICATOR
FRONT FOG LIGHT
INDICATOR
DRIVE CIRCUIT
MICRO COMPUTER
DRIVE CIRCUIT
CAN TRANSCEIVER &
RECEIVER
33
32
38
R
L
B
*1
*1
J/C
i232
J/C
i233
*1
*1
*1 : TERMINAL No. OPTIONAL ARRANGEMENT
B
C:
i84
R
L
C27
C35
E
BODY
INTEGRATED
UNIT
REF. TO GND
[GND-06]

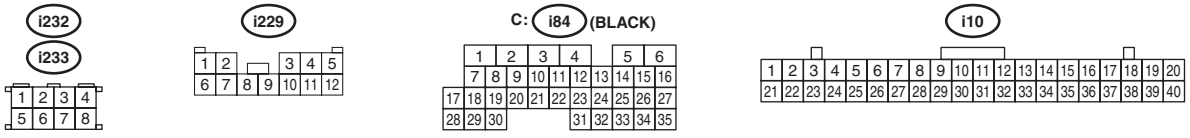
i232
i233
i229
C:
i84
(BLACK)
i10

WI-41881

25.Hybrid Electric Vehicle System

A: WIRING DIAGRAM

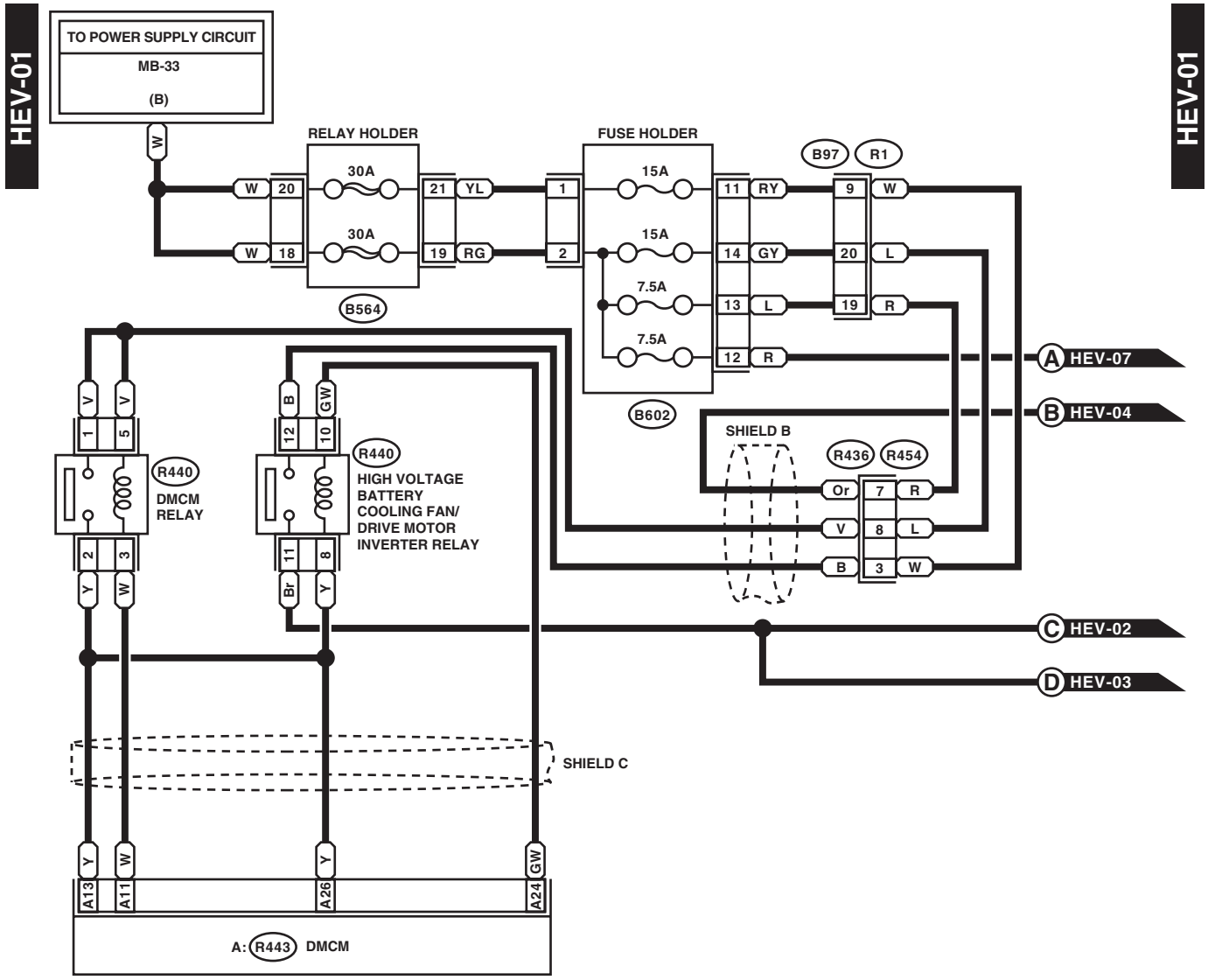

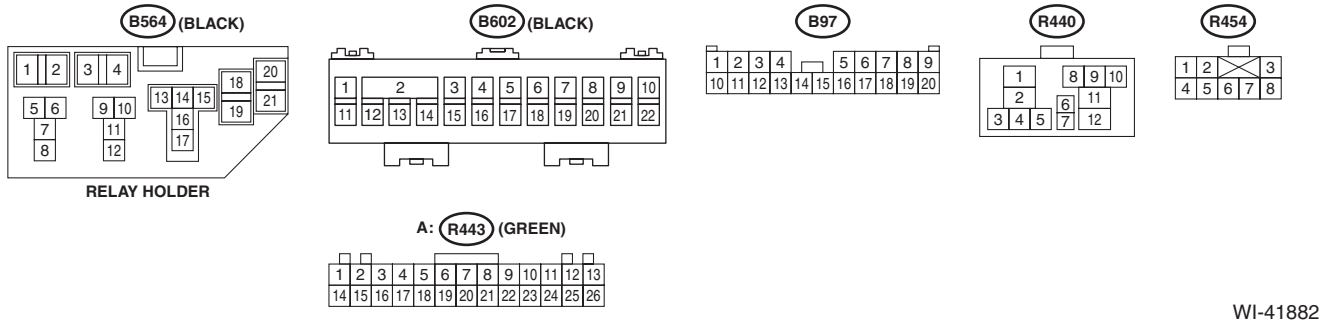

WI-41882

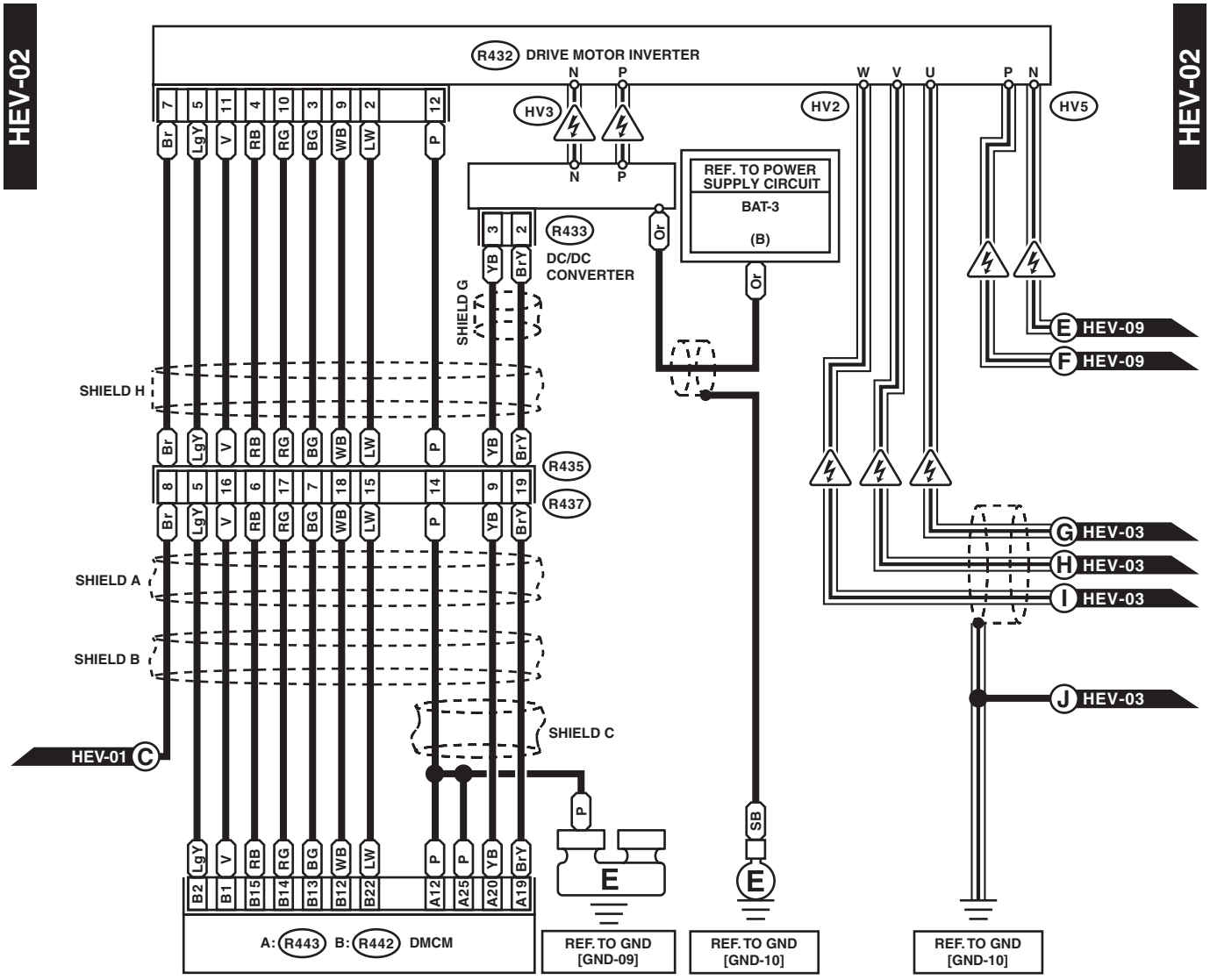

R432 (GRAY)

1	2	3	4	5	6	
7	8	9	10	11	12	

R433 (BLACK)

1	2	3	4

R437 (BLACK)

1	2	3	4		5	6	7	8
9	10	11	12	13	14	15	16	17	18	19

A: R443 (GREEN)

1	2	3	4	5	6	7	8	9	10	11	12	13
14	15	16	17	18	19	20	21	22	23	24	25	26

B: R442 (GREEN)

1	2	3	4	5	6	7	8	9	10	11
12	13	14	15	16	17	18	19	20	21	22

WI-48725

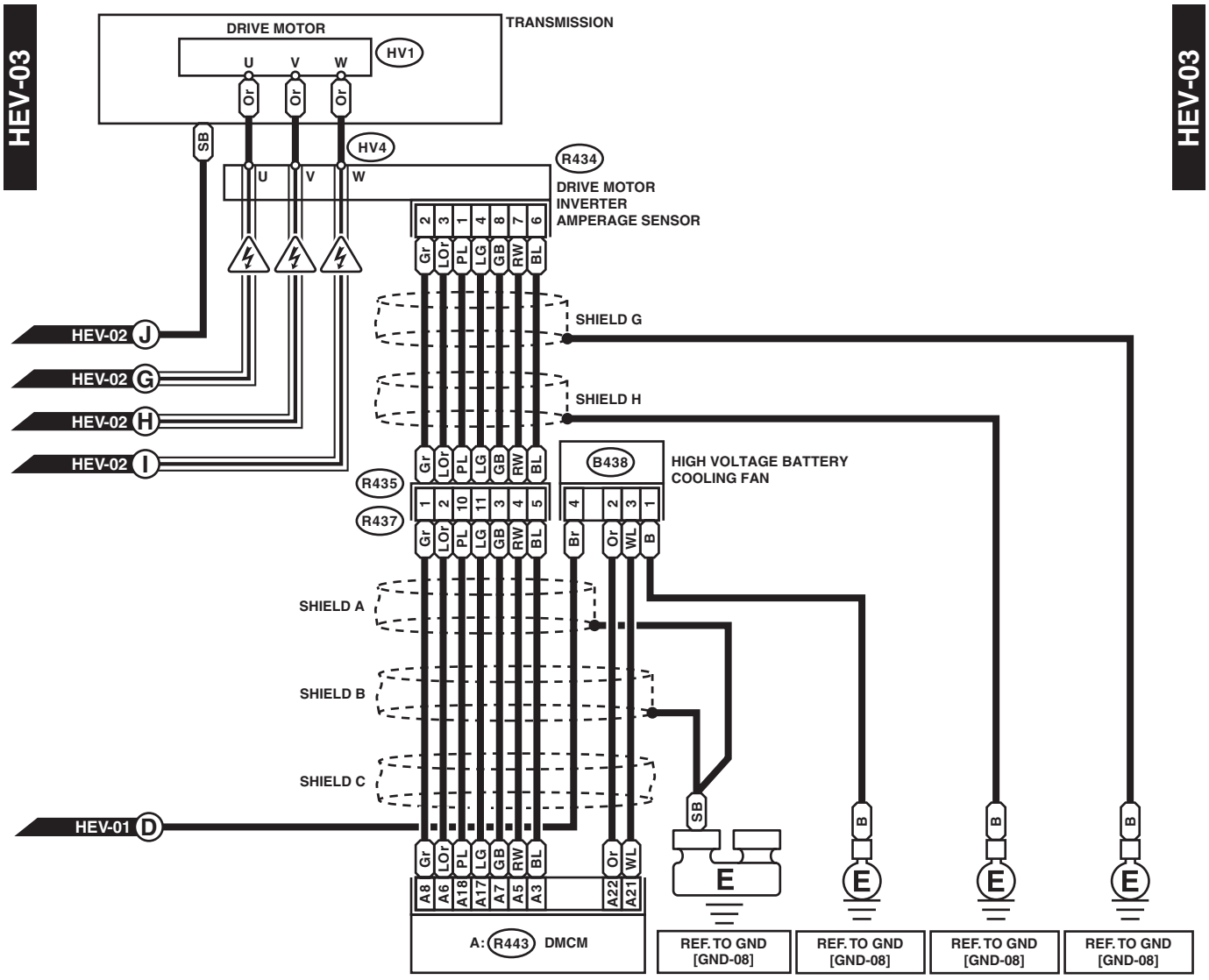
HEV-03
HEV-03
DRIVE MOTOR
TRANSMISSION
HV1
U
V
W
Or
SB
HV4
R434
DRIVE MOTOR
INVERTER
AMPERAGE SENSOR
HEV-02 J
HEV-02 G
HEV-02 H
HEV-02 I
SHIELD G
SHIELD H
B438
HIGH VOLTAGE BATTERY
COOLING FAN
R435
R437
SHIELD A
SHIELD B
SHIELD C
HEV-01 D
A: R443 DMCM
REF. TO GND
[GND-08]
REF. TO GND
[GND-08]
REF. TO GND
[GND-08]
REF. TO GND
[GND-08]

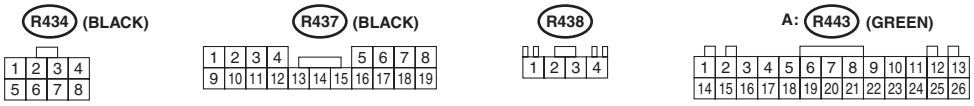
R434 (BLACK)
R437 (BLACK)
R438
A: R443 (GREEN)

WI-42220

HEV-04

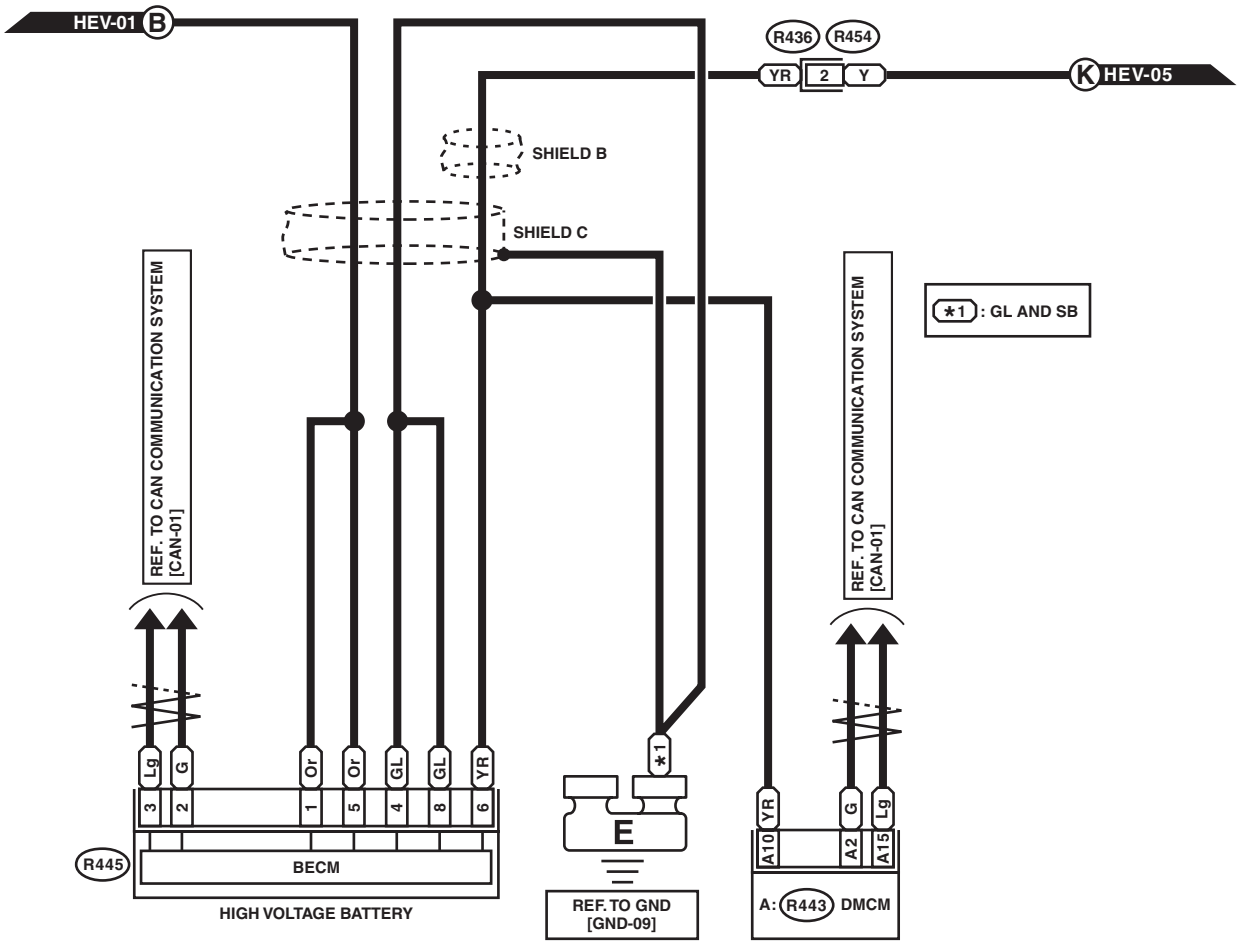

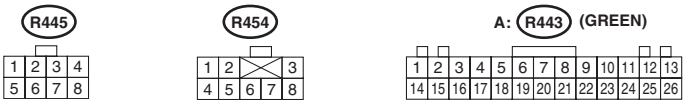

WI-42221

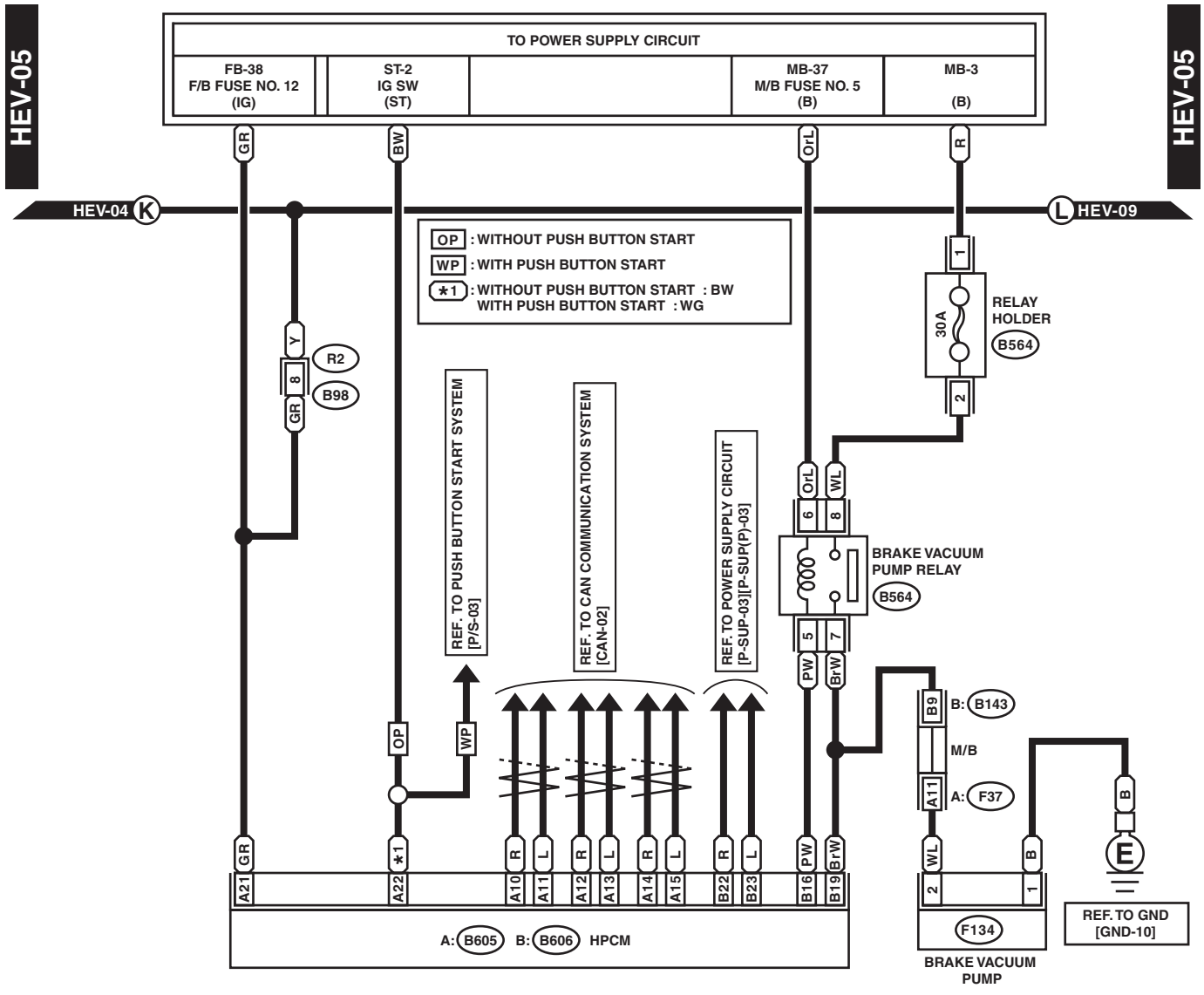
HEV-05
HEV-05
TO POWER SUPPLY CIRCUIT
FB-38
F/B FUSE NO. 12
(IG)
ST-2
IG SW
(ST)
MB-37
M/B FUSE NO. 5
(B)
MB-3
(B)
GR
BW
OrL
R
HEV-04 K
L HEV-09
OP : WITHOUT PUSH BUTTON START
WP : WITH PUSH BUTTON START
*1 : WITHOUT PUSH BUTTON START : BW
WITH PUSH BUTTON START : WG
RELAY HOLDER
B564
30A
Y
R2
B98
GR
REF. TO PUSH BUTTON START SYSTEM [P/S-03]
REF. TO CAN COMMUNICATION SYSTEM [CAN-02]
REF. TO POWER SUPPLY CIRCUIT [P-SUP-03][P-SUP(P)-03]
OrL
WL
BRAKE VACUUM PUMP RELAY
B564
PW
BrW
B: B143
M/B
A: F37
OP
WP
GR
*1
R
L
PW
BrW
WL
B
A21
A22
A10
A11
A12
A13
A14
A15
B22
B23
B16
B19
A11
A: B605 B: B606 HPCM
F134
BRAKE VACUUM PUMP
REF. TO GND [GND-10]
B98
B564 (BLACK)
F134 (DARK GRAY)
A: B605
B: B606
RELAY HOLDER
A: F37
B: B143

WI-42222

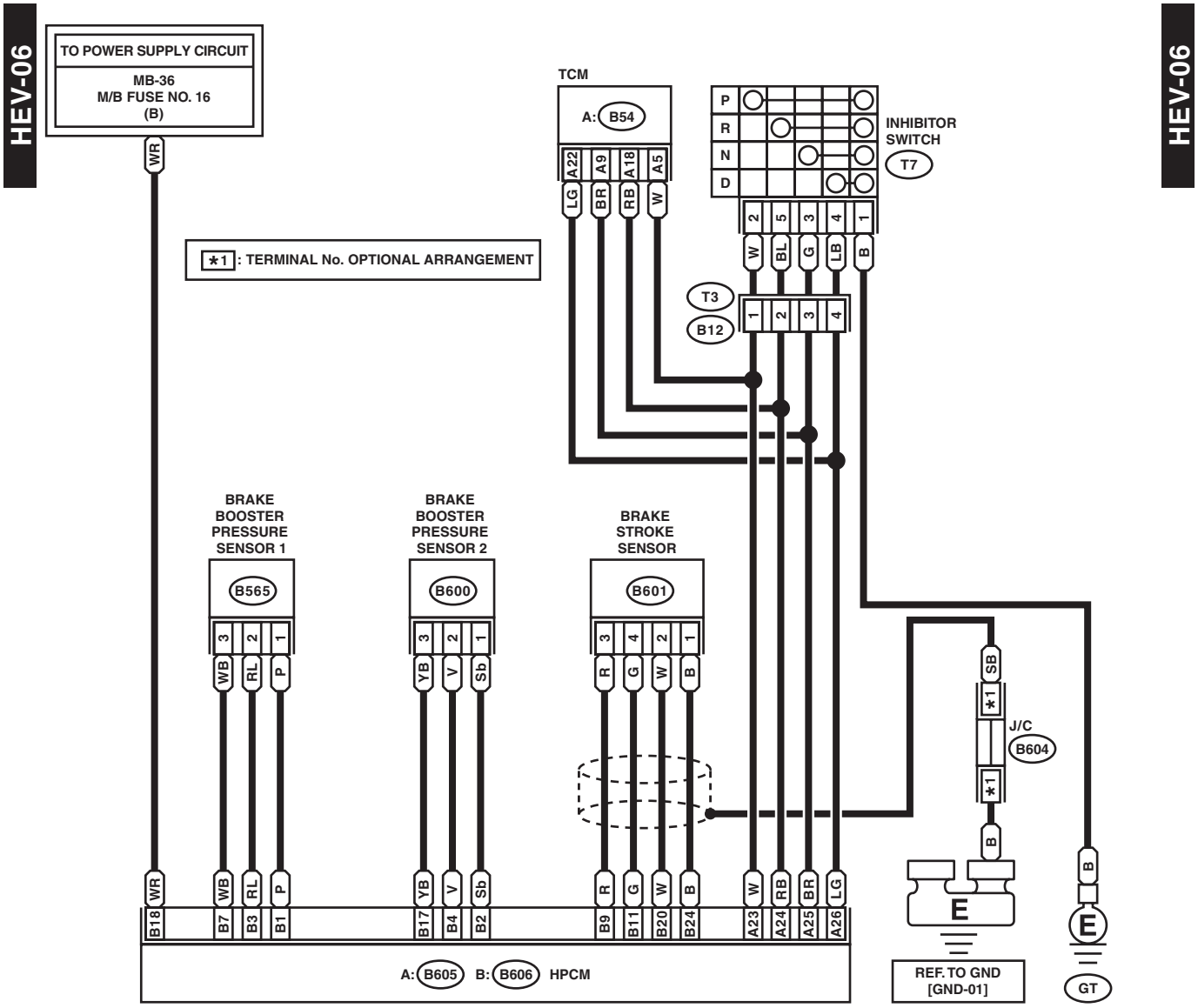
HEV-06
HEV-06
TO POWER SUPPLY CIRCUIT
MB-36
M/B FUSE NO. 16
(B)
WR
*1: TERMINAL No. OPTIONAL ARRANGEMENT
TCM
A: B54
A22
A9
A18
A5
LG
BR
RB
W
P
R
N
D
INHIBITOR SWITCH
T7
2
5
3
4
1
W
BL
G
LB
B
T3
B12
1
2
3
4
BRAKE BOOSTER PRESSURE SENSOR 1
B565
BRAKE BOOSTER PRESSURE SENSOR 2
B600
BRAKE STROKE SENSOR
B601
WB
RL
P
YB
V
Sb
R
G
W
B
SB
J/C
B604
B18
B7
B3
B1
B17
B4
B2
B9
B11
B20
B24
A23
A24
A25
A26
A: B605 B: B606 HPCM
REF. TO GND [GND-01]
GT

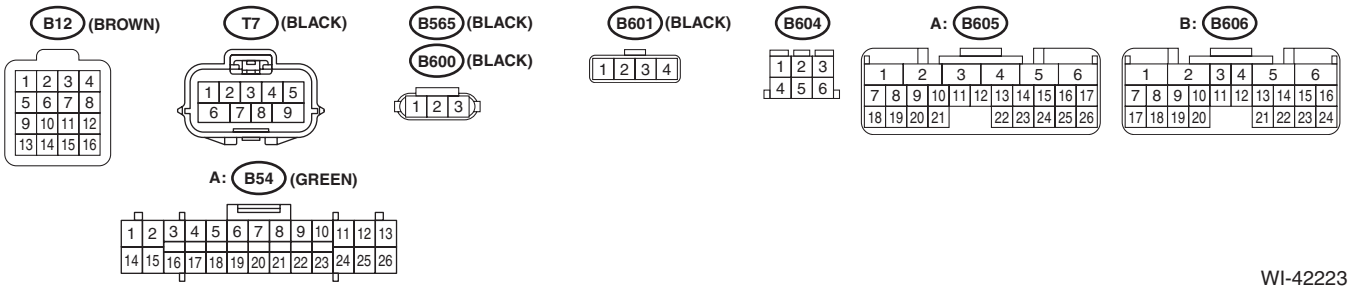
B12 (BROWN)
T7 (BLACK)
B565 (BLACK)
B600 (BLACK)
B601 (BLACK)
B604
A: B605
B: B606
A: B54 (GREEN)

WI-42223

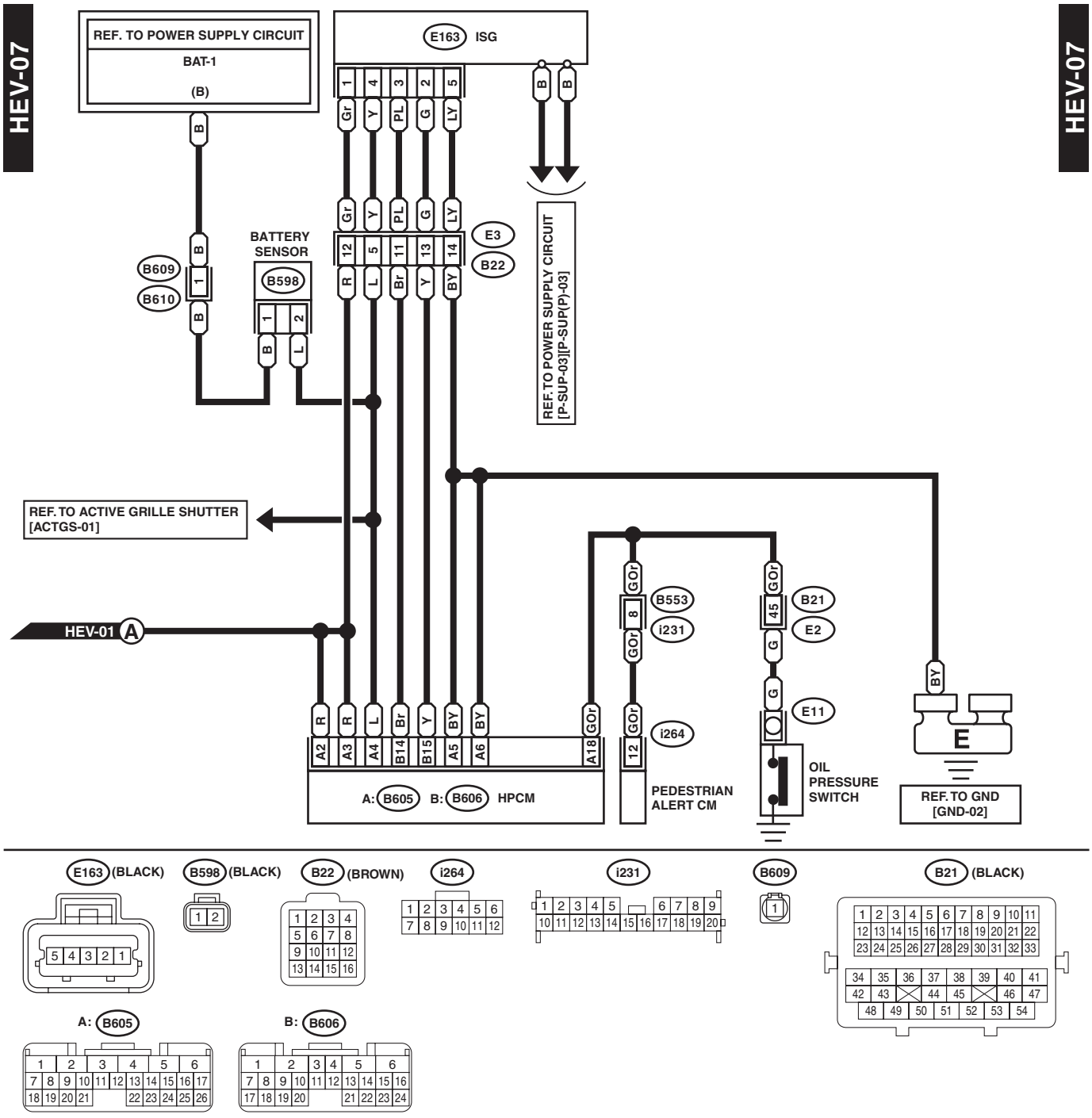
HEV-07
HEV-07
REF. TO POWER SUPPLY CIRCUIT
BAT-1
(B)
E163 ISG
BATTERY SENSOR
B609
B610
B598
E3
B22
REF. TO POWER SUPPLY CIRCUIT [P-SUP-03][P-SUP(P)-03]
REF. TO ACTIVE GRILLE SHUTTER [ACTGS-01]
HEV-01 A
B553
i231
B21
E2
E11
i264
OIL PRESSURE SWITCH
REF. TO GND [GND-02]
A: B605 B: B606 HPCM
PEDESTRIAN ALERT CM
E163 (BLACK)
B598 (BLACK)
B22 (BROWN)
i264
i231
B609
B21 (BLACK)
A: B605
B: B606

WI-48717

HEV-08

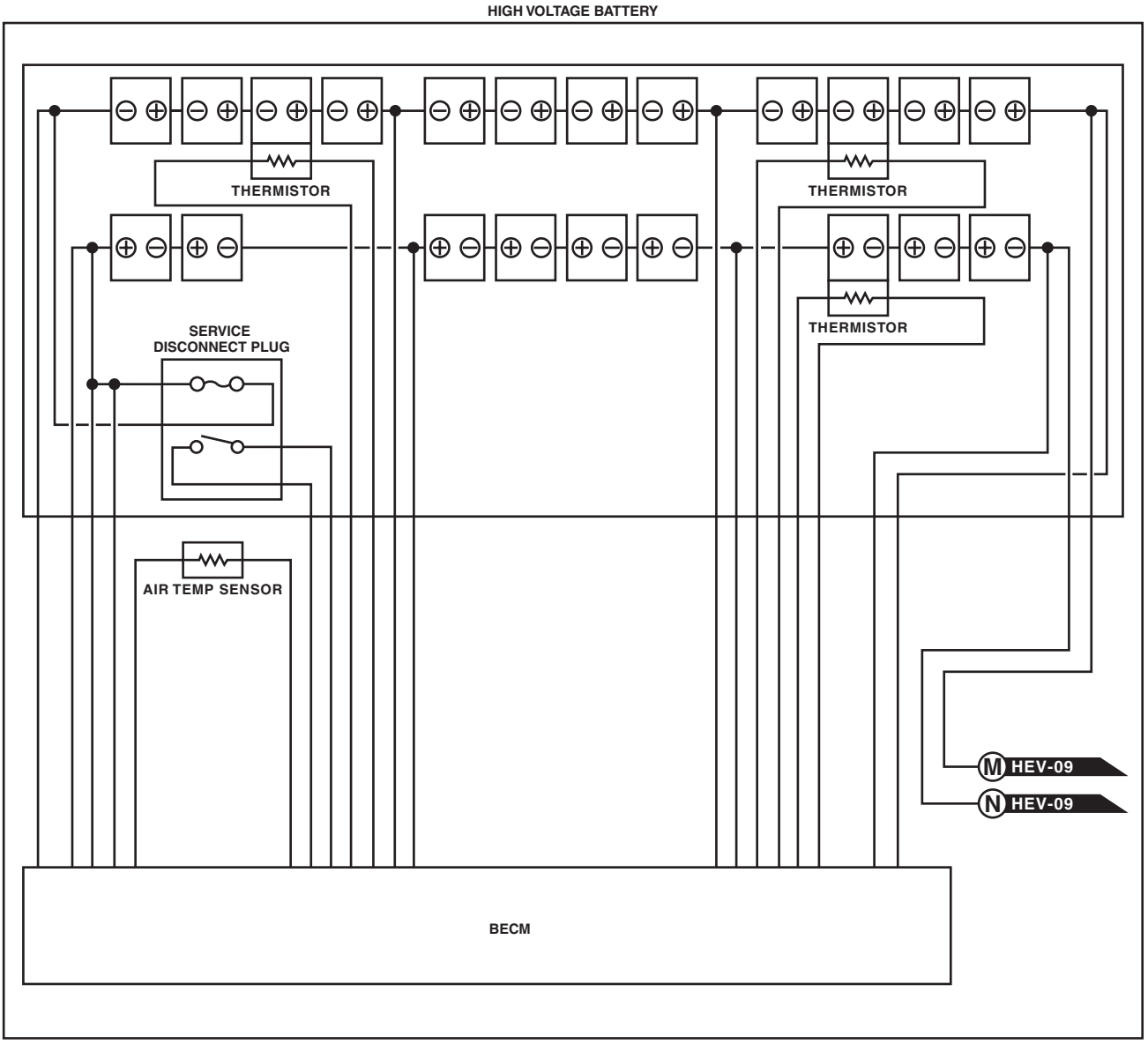

WI-42225

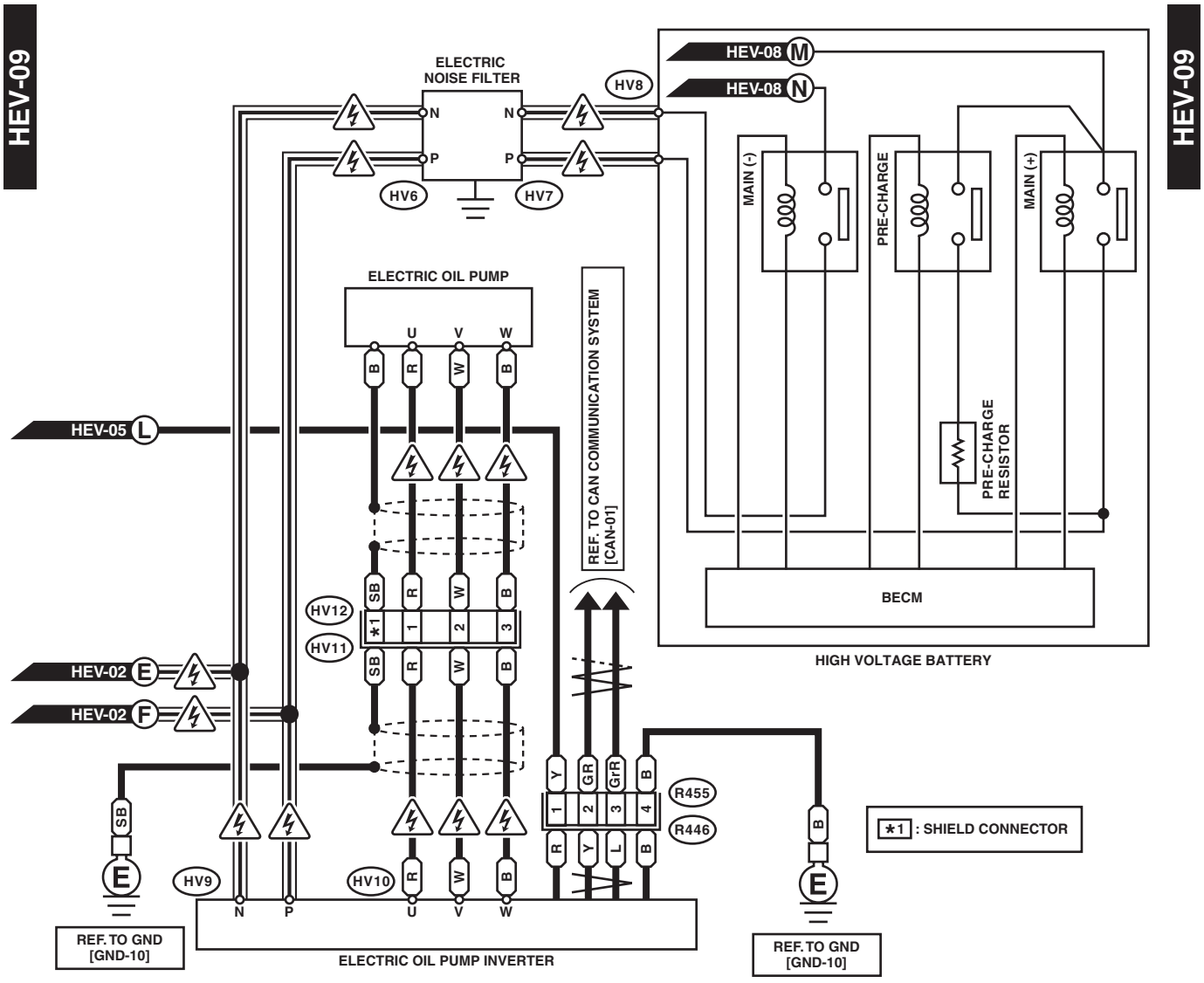
HEV-09
HEV-09
ELECTRIC NOISE FILTER
HV8
HV6
HV7
N
P
HEV-08 M
HEV-08 N
MAIN (-)
PRE-CHARGE
MAIN (+)
PRE-CHARGE RESISTOR
ELECTRIC OIL PUMP
U V W
REF. TO CAN COMMUNICATION SYSTEM [CAN-01]
HEV-05 L
HV12
HV11
HEV-02 E
HEV-02 F
BECM
HIGH VOLTAGE BATTERY
R455
R446
*1 : SHIELD CONNECTOR
HV9
HV10
REF. TO GND [GND-10]
ELECTRIC OIL PUMP INVERTER
REF. TO GND [GND-10]

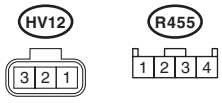
HV12
R455
3 2 1
1 2 3 4

WI-42226

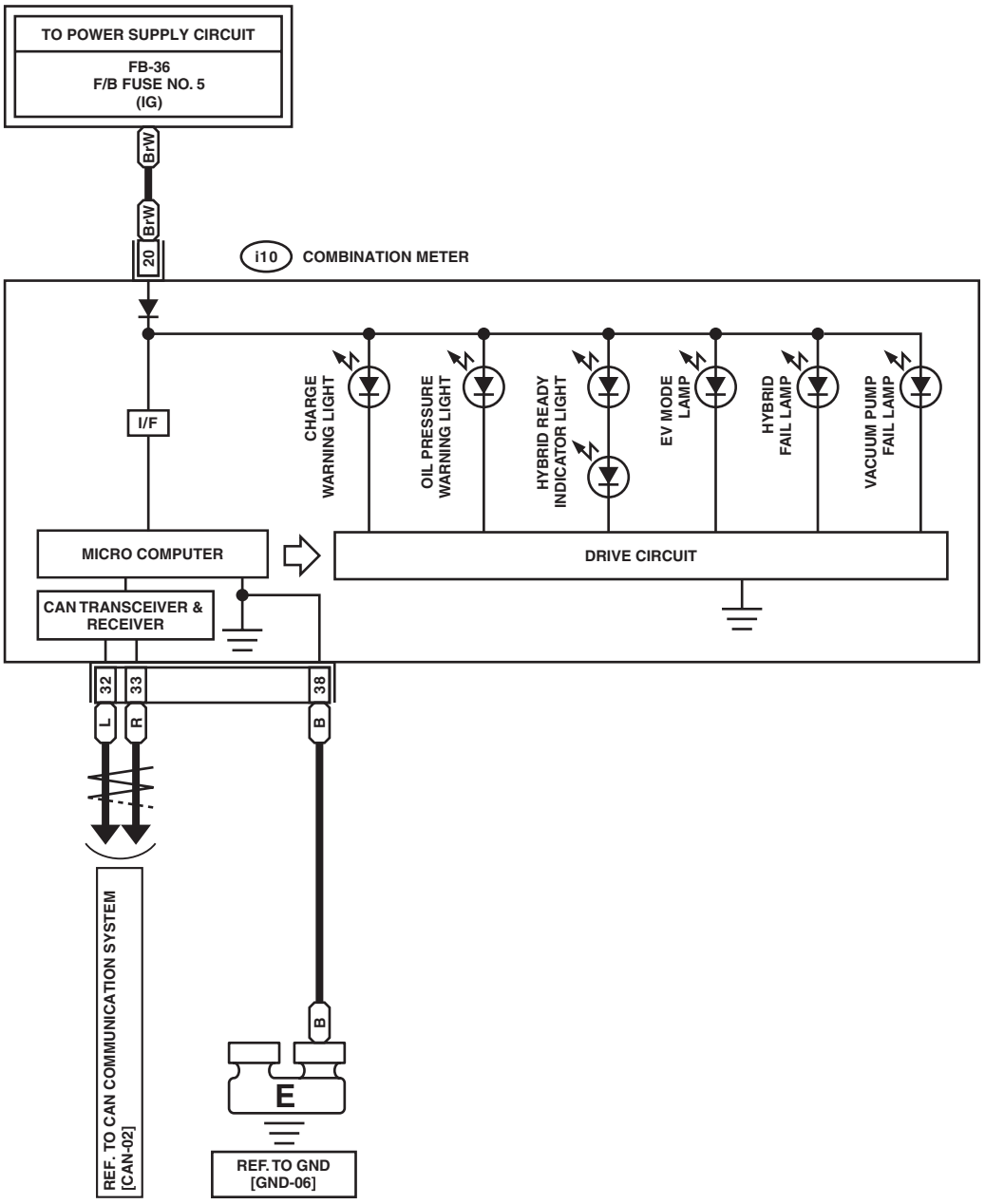
TO POWER SUPPLY CIRCUIT
FB-36
F/B FUSE NO. 5
(IG)
BrW
BrW
20
i10
COMBINATION METER
I/F
CHARGE WARNING LIGHT
OIL PRESSURE WARNING LIGHT
HYBRID READY INDICATOR LIGHT
EV MODE LAMP
HYBRID FAIL LAMP
VACUUM PUMP FAIL LAMP
MICRO COMPUTER
DRIVE CIRCUIT
CAN TRANSCEIVER & RECEIVER
32
33
38
L
R
B
REF. TO CAN COMMUNICATION SYSTEM [CAN-02]
B
E
REF. TO GND [GND-06]

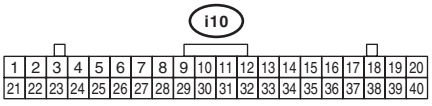
i10
1 2 3 4 5 6 7 8 9 10 11 12 13 14 15 16 17 18 19 20
21 22 23 24 25 26 27 28 29 30 31 32 33 34 35 36 37 38 39 40

WI-42227

26.Horn System

A: WIRING DIAGRAM

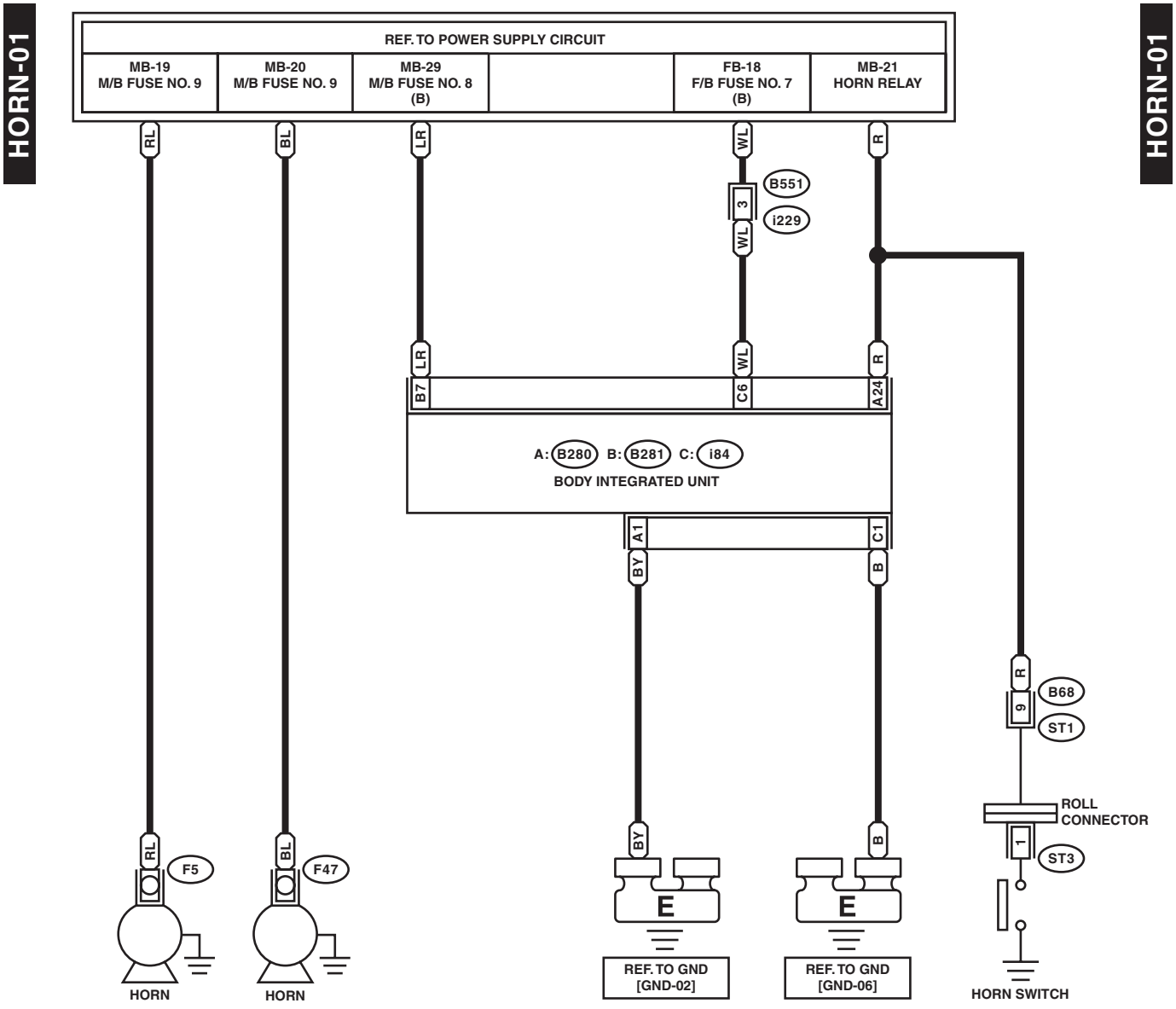

WI-48094

27.Immobilizer System

A: WIRING DIAGRAM

1. WITHOUT PUSH BUTTON START

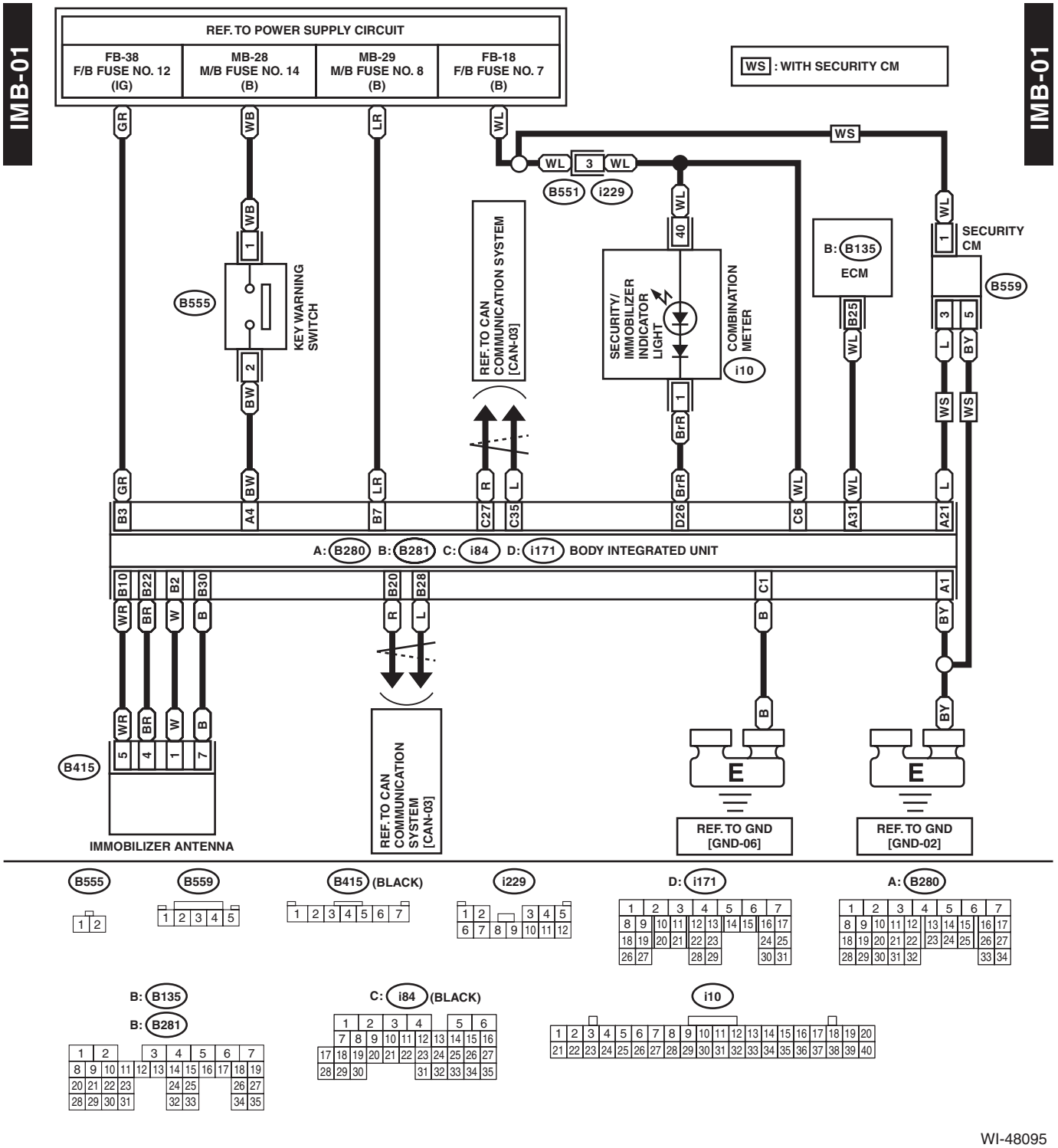

WI-48095

2. WITH PUSH BUTTON START

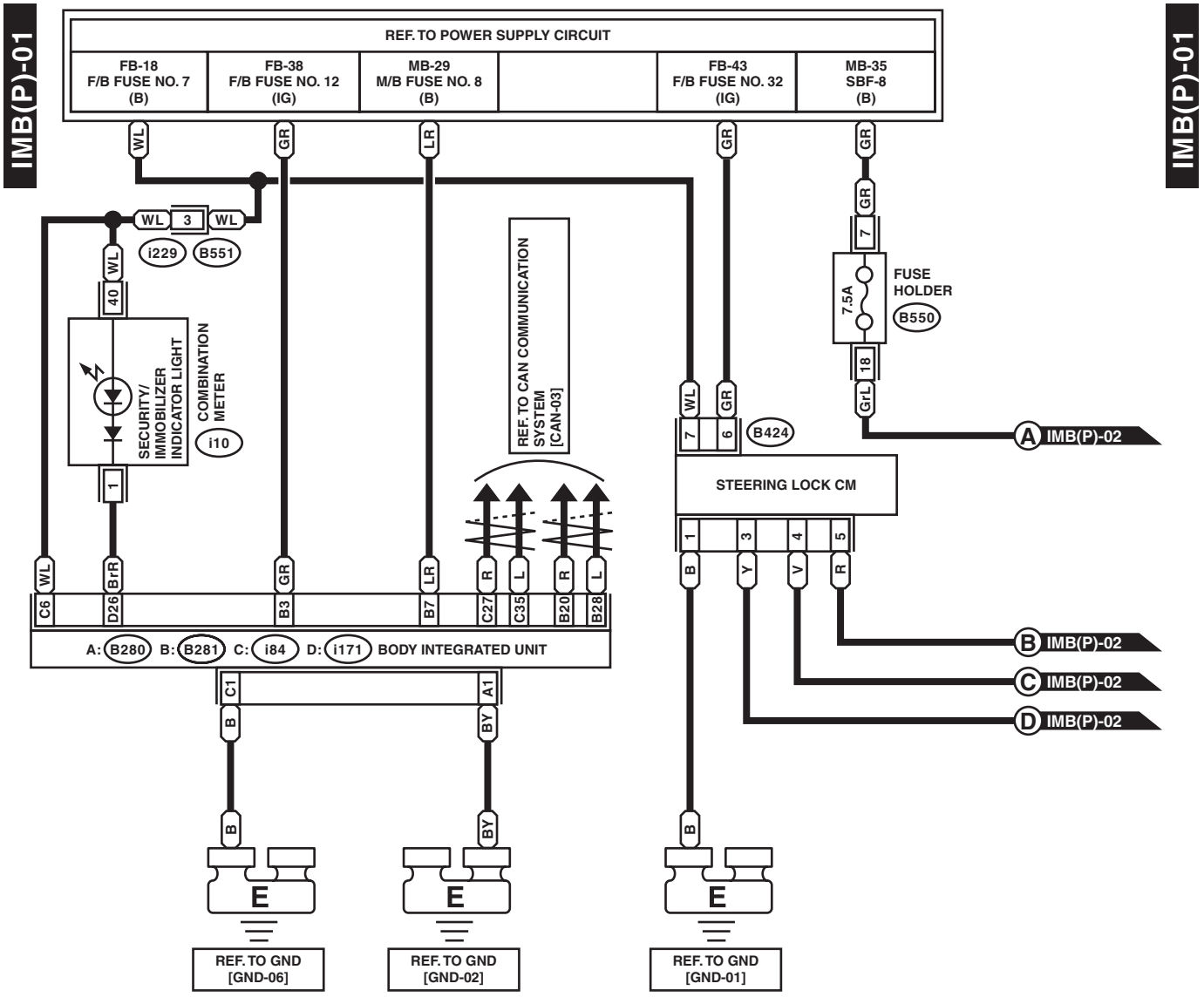

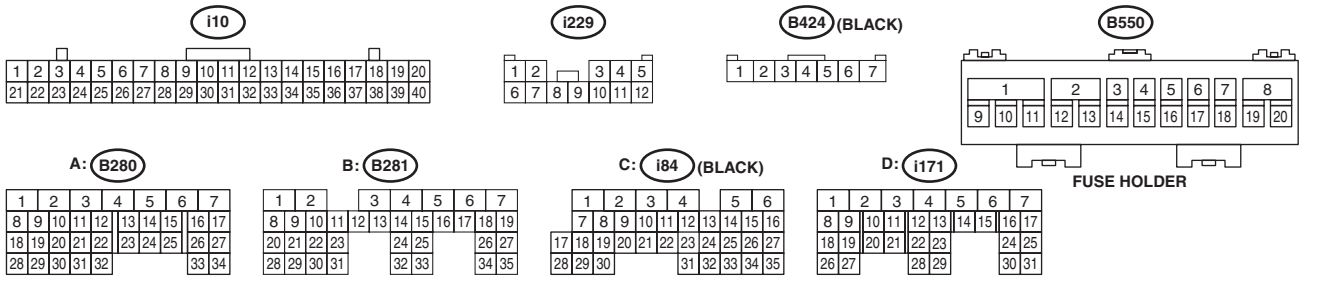

WI-48096

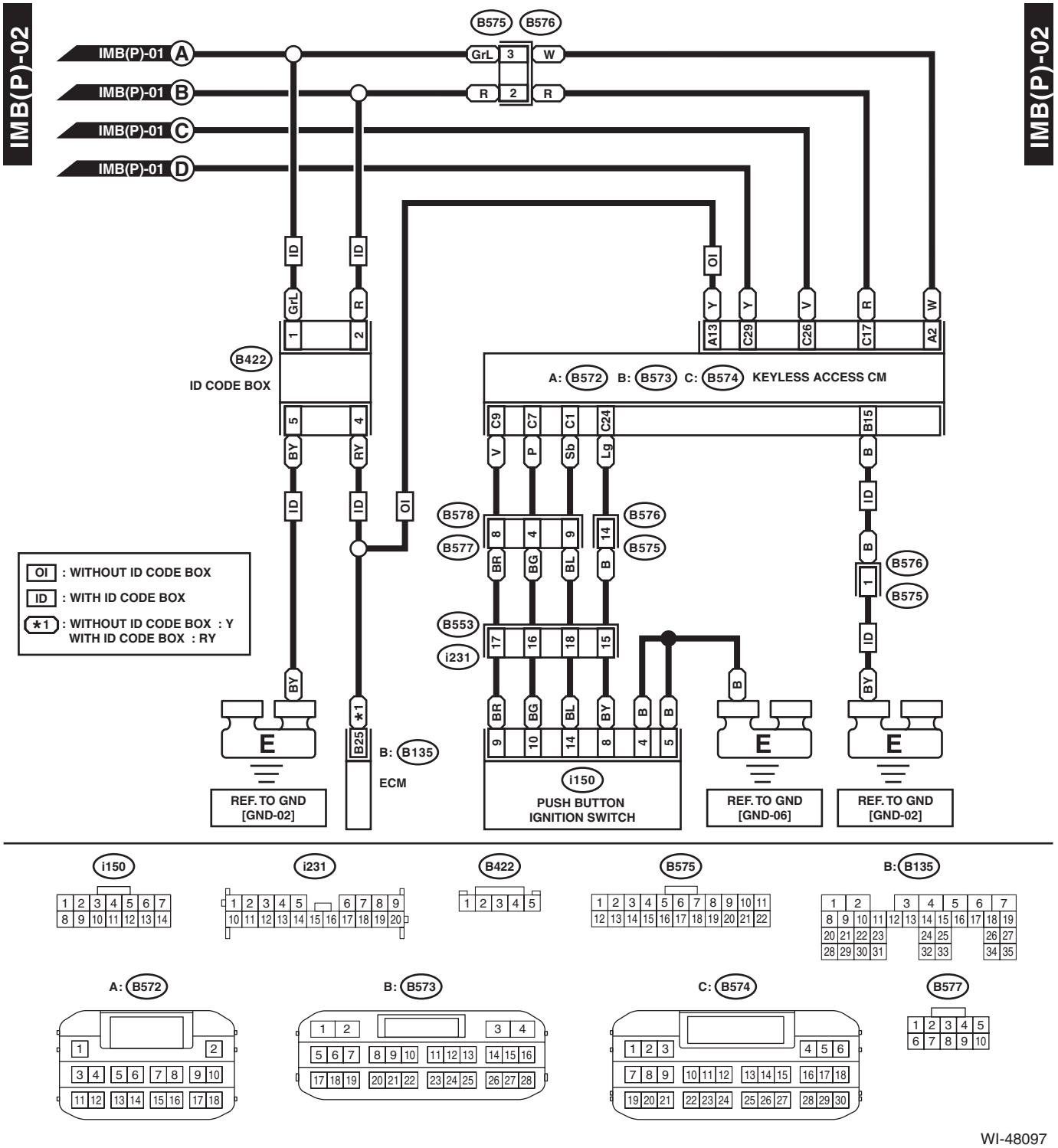
IMB(P)-02
IMB(P)-01 A
IMB(P)-01 B
IMB(P)-01 C
IMB(P)-01 D
B575
B576
GrL
W
R
ID
OI
A13
C29
C26
C17
A2
B422
ID CODE BOX
A: B572 B: B573 C: B574 KEYLESS ACCESS CM
C9
C7
C1
C24
B15
V
P
Sb
Lg
B578
B577
B553
i231
BR
BG
BL
BY
B
B25
B: B135
ECM
i150
PUSH BUTTON IGNITION SWITCH
REF. TO GND [GND-02]
REF. TO GND [GND-06]
REF. TO GND [GND-02]
OI : WITHOUT ID CODE BOX
ID : WITH ID CODE BOX
*1 : WITHOUT ID CODE BOX : Y
WITH ID CODE BOX : RY

i150
i231
B422
B575
B: B135
A: B572
B: B573
C: B574
B577

WI-48097

IMB(P)-03

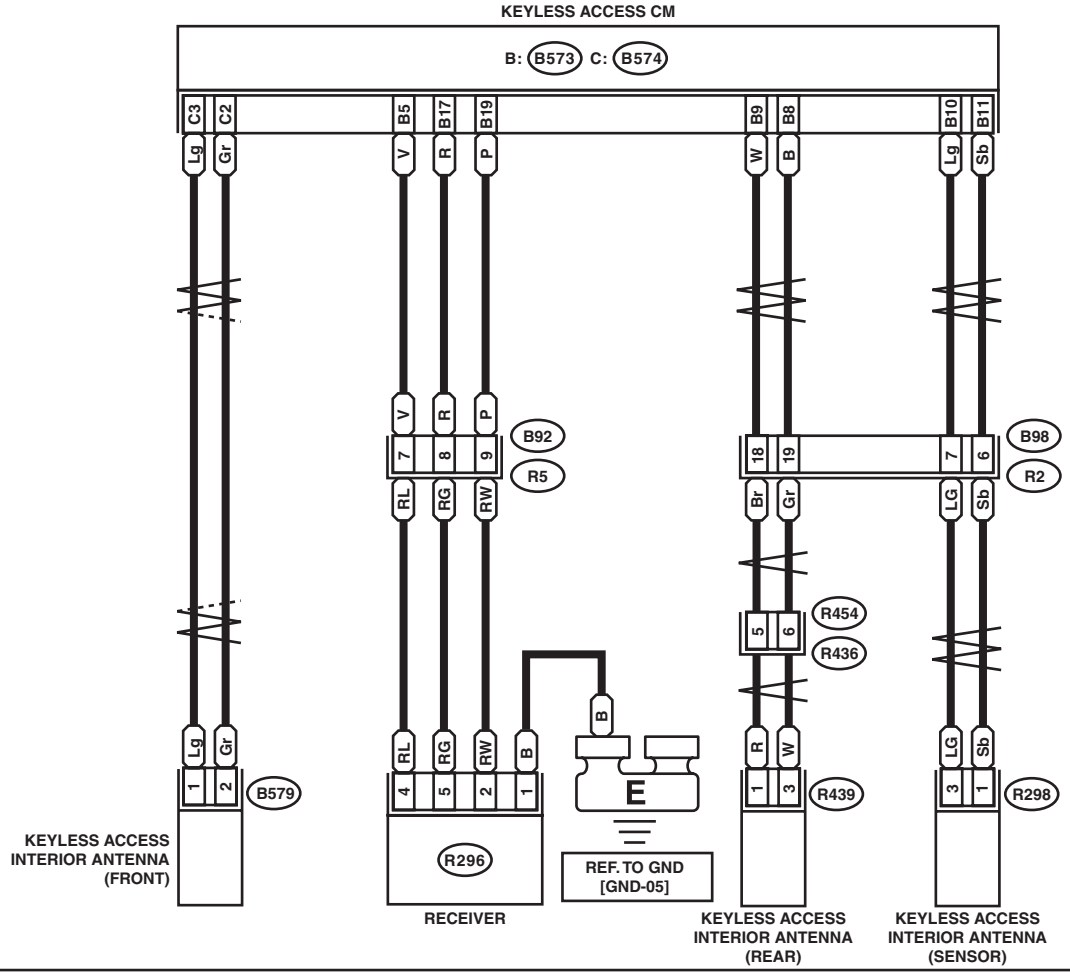

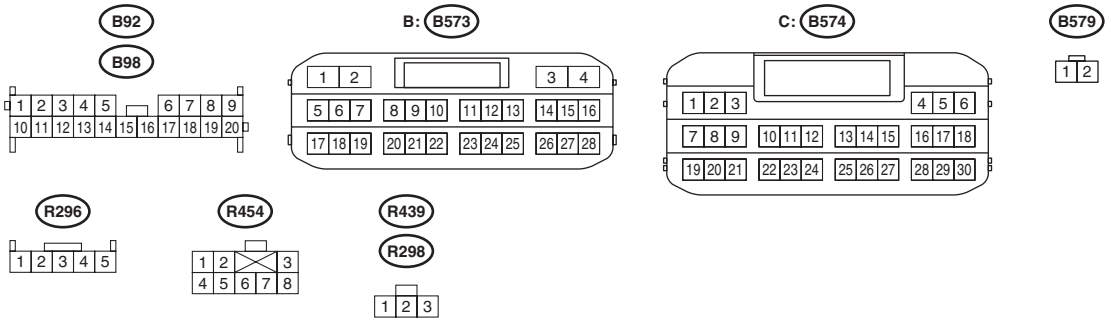

WI-48098

28.Interior Light System

A: WIRING DIAGRAM

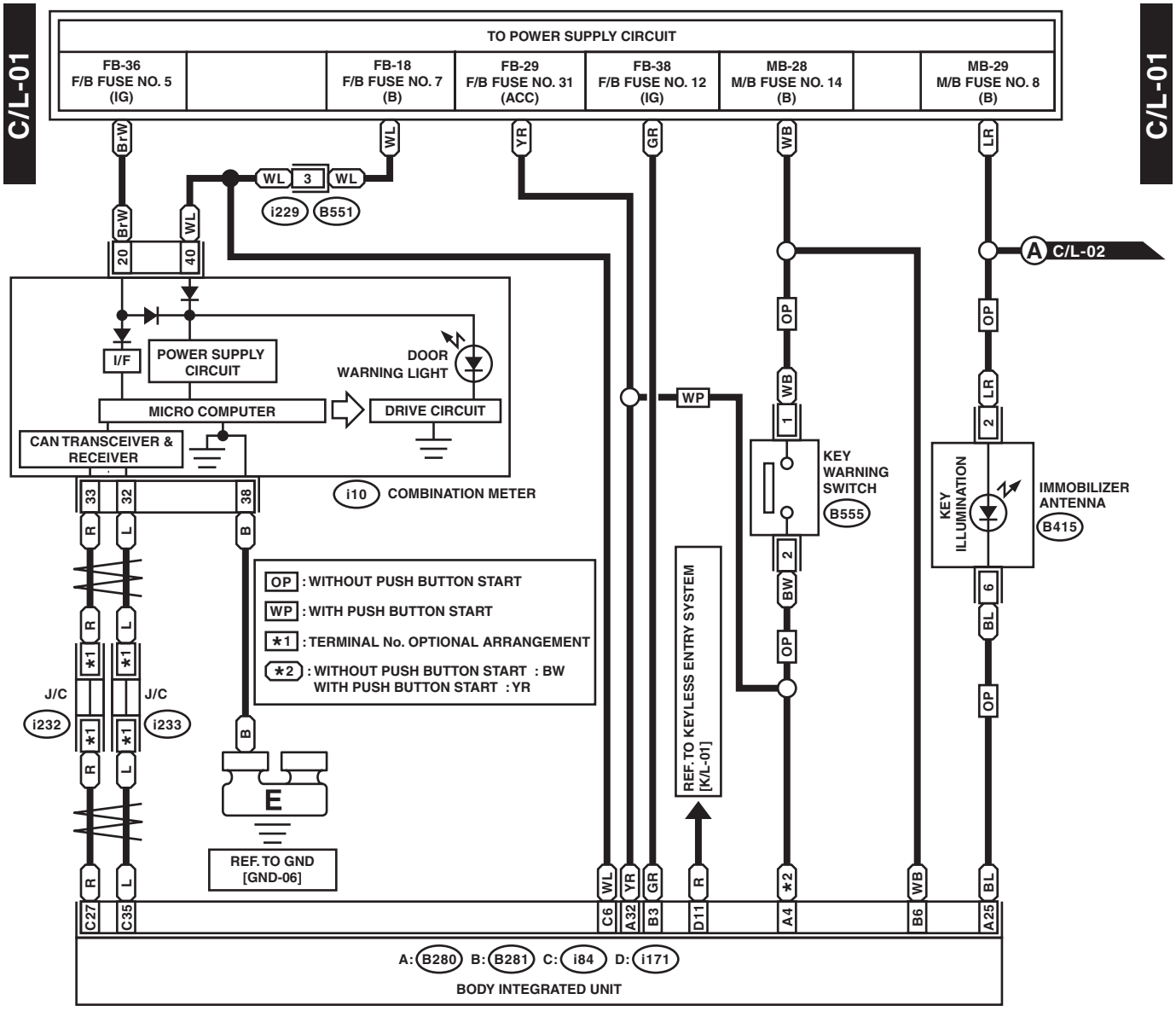

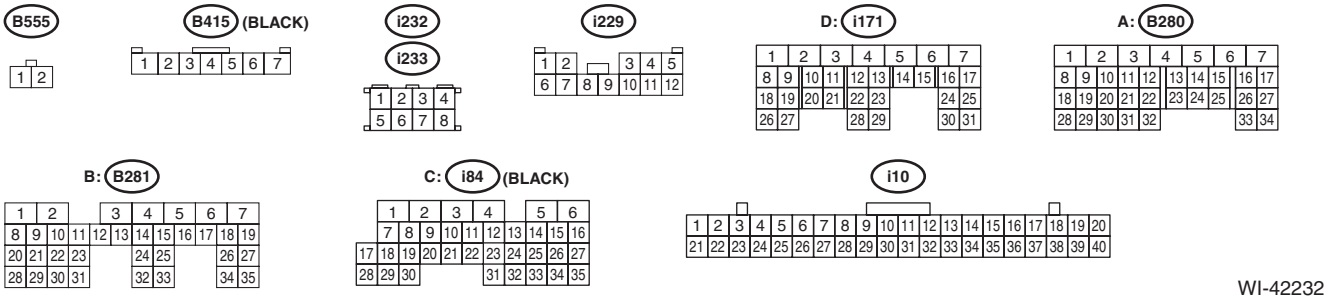

WI-42232

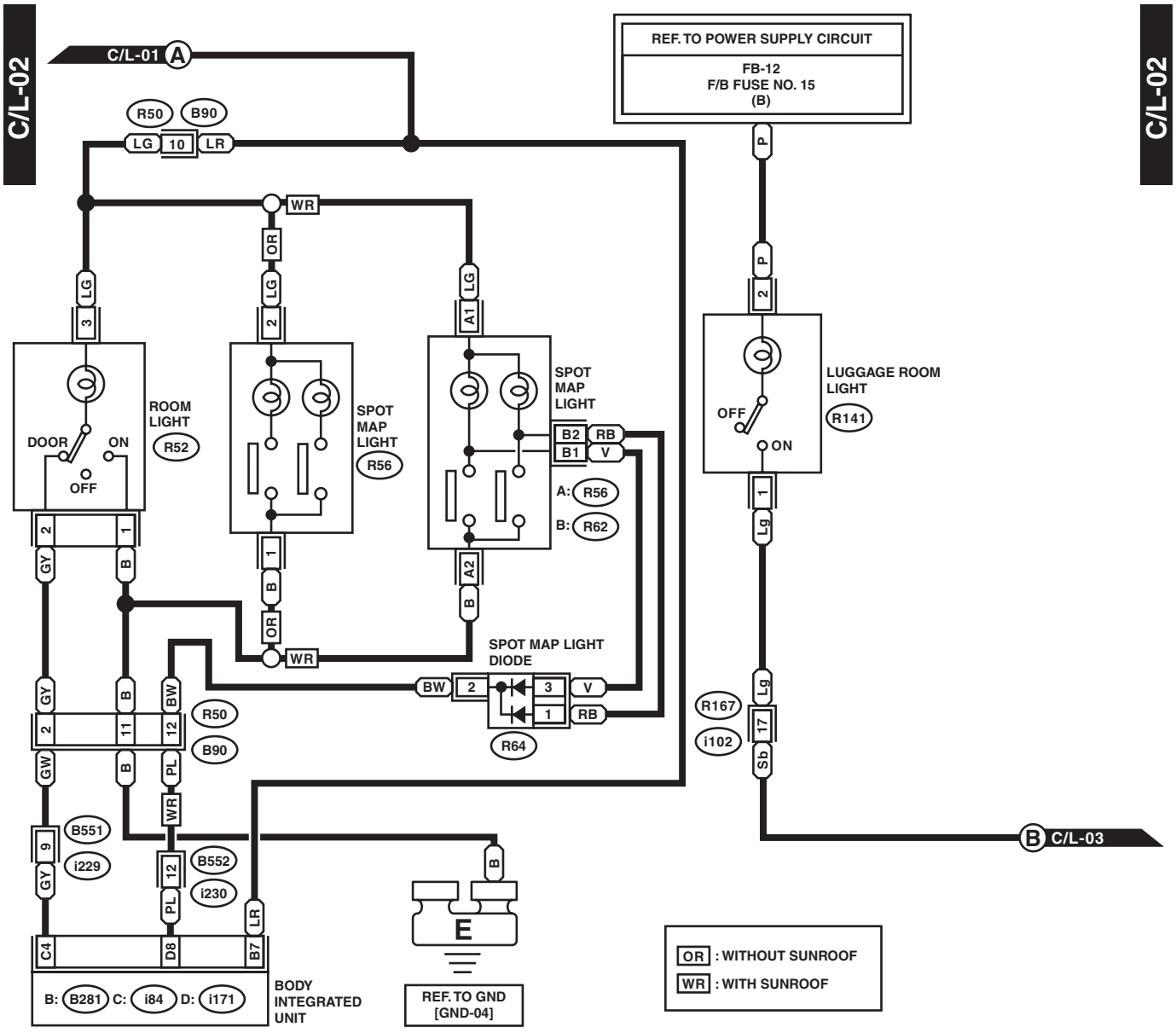
C/L-02
C/L-01 A
REF. TO POWER SUPPLY CIRCUIT
FB-12
F/B FUSE NO. 15
(B)
R50
B90
LG
10
LR
WR
OR
LG
P
ROOM LIGHT
R52
DOOR
ON
OFF
SPOT MAP LIGHT
R56
SPOT MAP LIGHT
B2
B1
RB
V
A: R56
B: R62
LUGGAGE ROOM LIGHT
R141
OFF
ON
Lg
SPOT MAP LIGHT DIODE
BW
R64
R167
i102
Sb
B C/L-03
GY
GW
PL
B551
i229
B552
i230
C4
D8
B7
B: B281 C: i84 D: i171
BODY INTEGRATED UNIT
E
REF. TO GND [GND-04]
OR : WITHOUT SUNROOF
WR : WITH SUNROOF
A: R56 : WR
R141 (LIGHT GRAY)
R64
R56 : OR
B: R62
R50
i229
i102
R52
i230
D: i171
B: B281
C: i84 (BLACK)

WI-48099

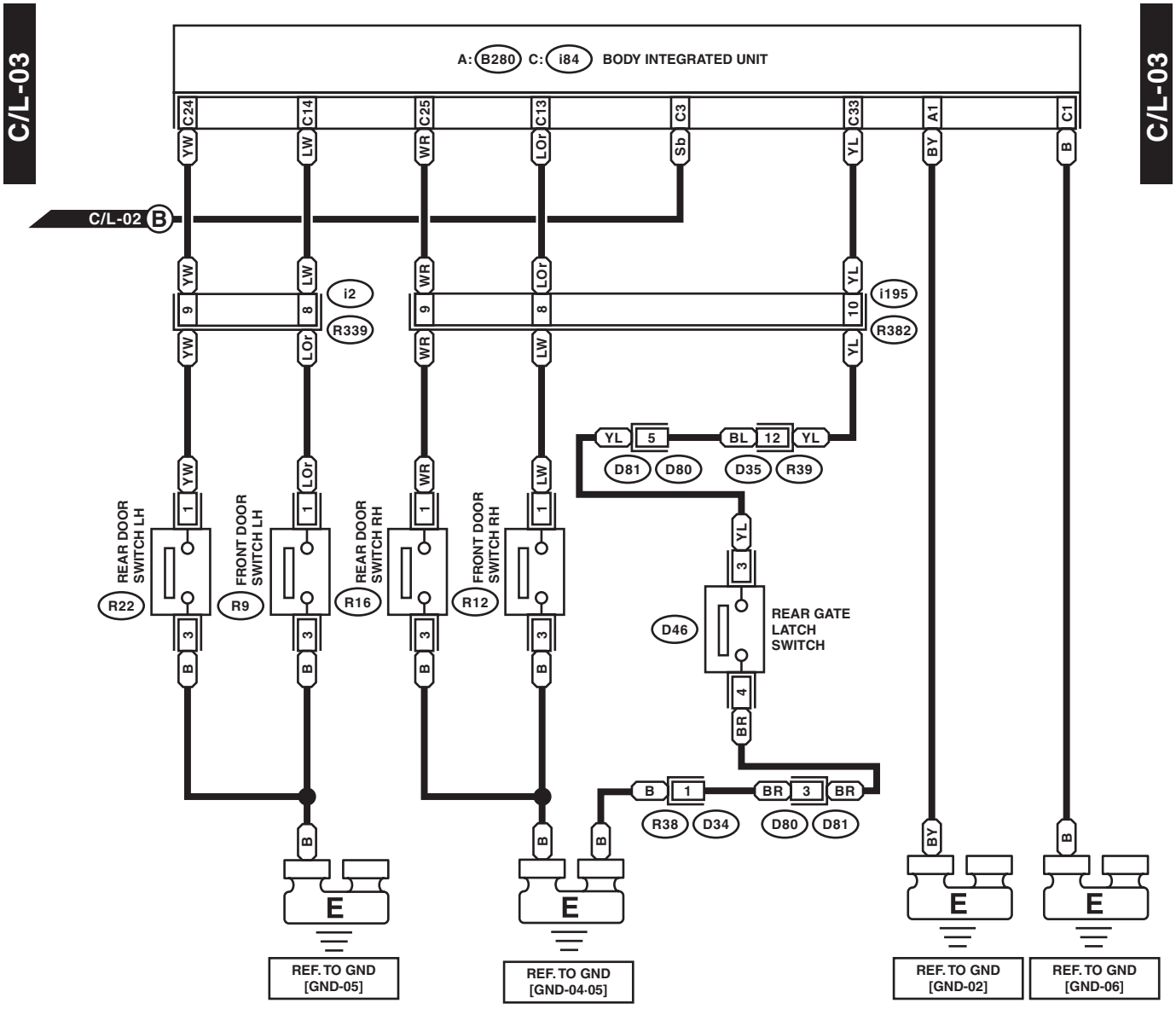
C/L-03
C/L-03
A: B280 C: i84 BODY INTEGRATED UNIT
C24
C14
C25
C13
C3
C33
A1
C1
YW
LW
WR
LOr
Sb
YL
BY
B
C/L-02 B
i2
R339
i195
R382
REAR DOOR SWITCH LH
R22
FRONT DOOR SWITCH LH
R9
REAR DOOR SWITCH RH
R16
FRONT DOOR SWITCH RH
R12
D81
D80
D35
R39
REAR GATE LATCH SWITCH
D46
R38
D34
REF. TO GND [GND-05]
REF. TO GND [GND-04·05]
REF. TO GND [GND-02]
REF. TO GND [GND-06]

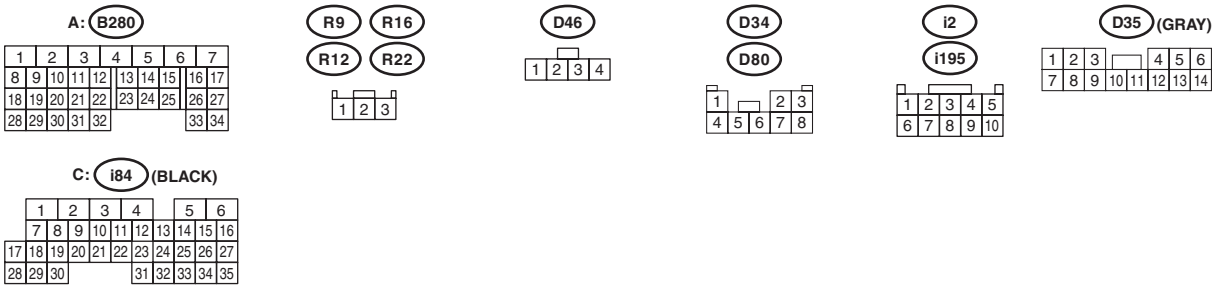
A: B280
C: i84 (BLACK)
R9 R16 R12 R22
D46
D34 D80
i2 i195
D35 (GRAY)

WI-48100

29.Keyless Access System

A: WIRING DIAGRAM

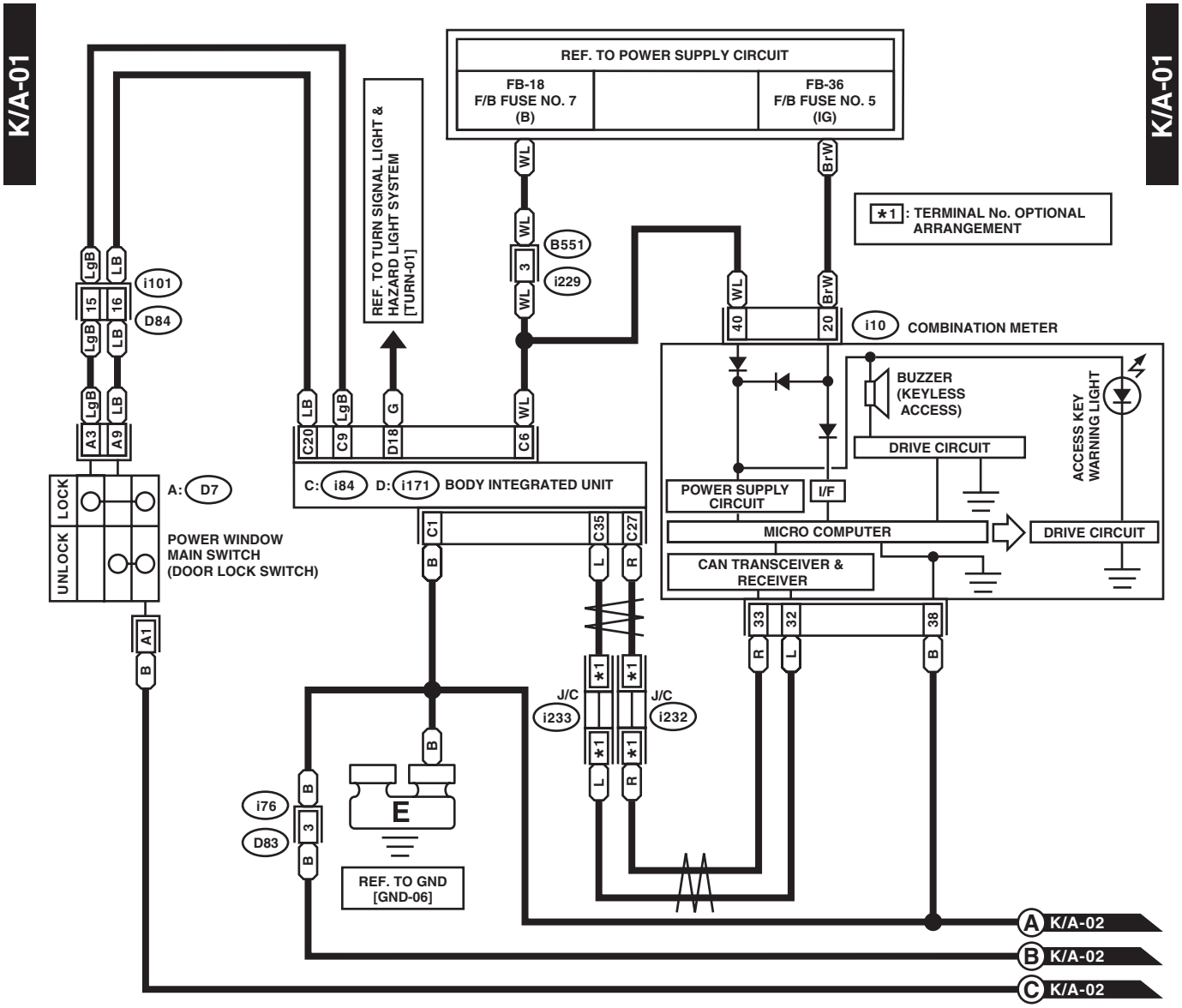

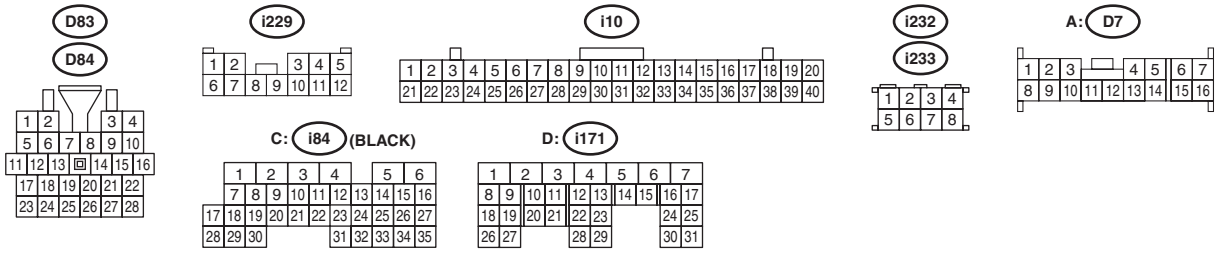

WI-48101

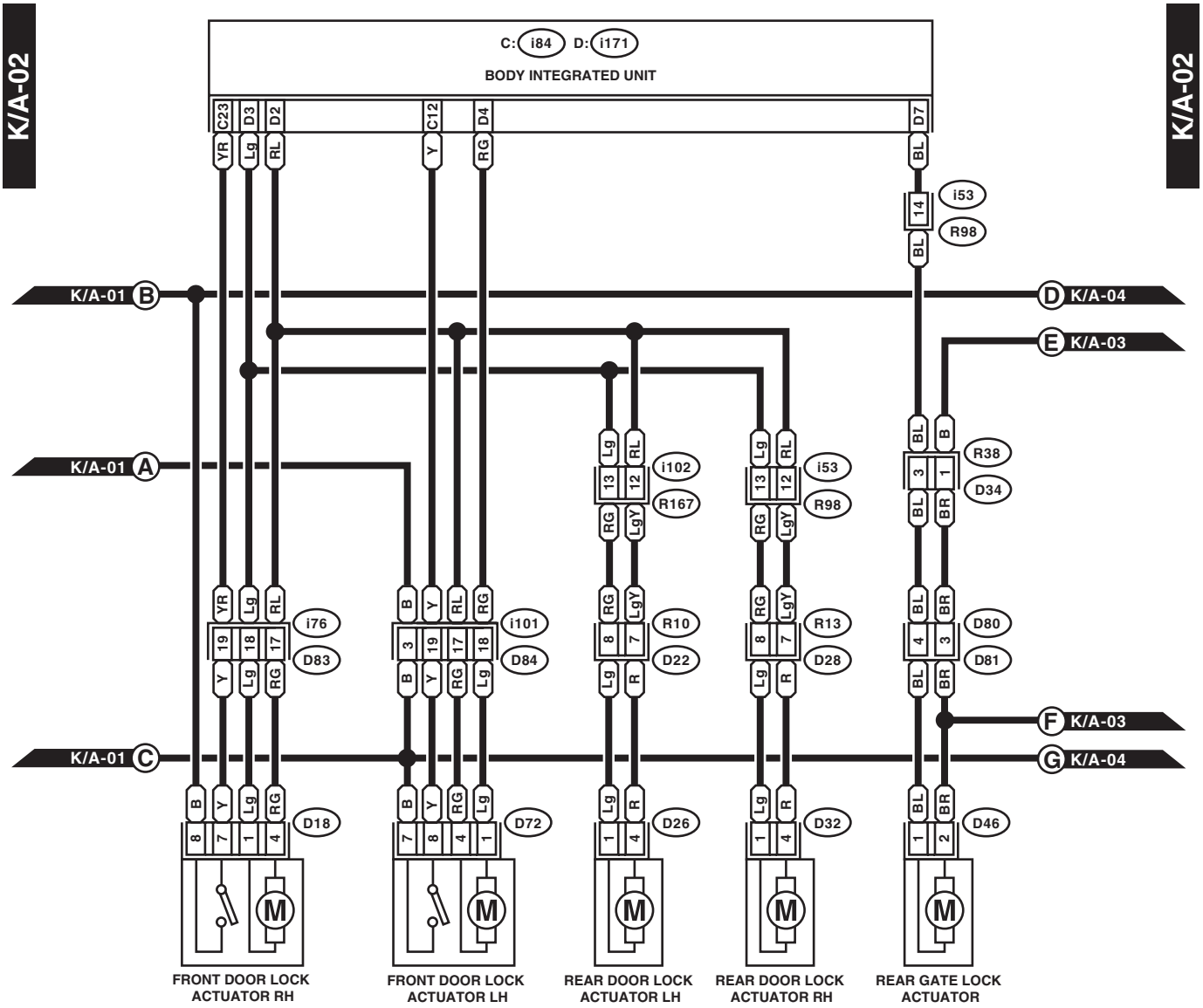
K/A-02
K/A-02
C: i84 D: i171
BODY INTEGRATED UNIT
C23 D3 D2 C12 D4 D7
YR Lg RL Y RG BL
i53
14
R98
BL
K/A-01 B
D K/A-04
E K/A-03
K/A-01 A
Lg RL i102 13 12 R167 RG LgY
Lg RL i53 13 12 R98 RG LgY
BL B R38 3 1 D34 BL BR
YR Lg RL i76 19 18 17 D83 Y Lg RG
B Y RL RG i101 3 19 17 18 D84 B Y RG Lg
RG LgY R10 8 7 D22 Lg R
RG LgY R13 8 7 D28 Lg R
BL BR D80 4 3 D81 BL BR
F K/A-03
K/A-01 C
G K/A-04
B Y Lg RG D18 8 7 1 4
B Y RG Lg D72 7 8 4 1
Lg R D26 1 4
Lg R D32 1 4
BL BR D46 1 2
M
FRONT DOOR LOCK ACTUATOR RH
FRONT DOOR LOCK ACTUATOR LH
REAR DOOR LOCK ACTUATOR LH
REAR DOOR LOCK ACTUATOR RH
REAR GATE LOCK ACTUATOR

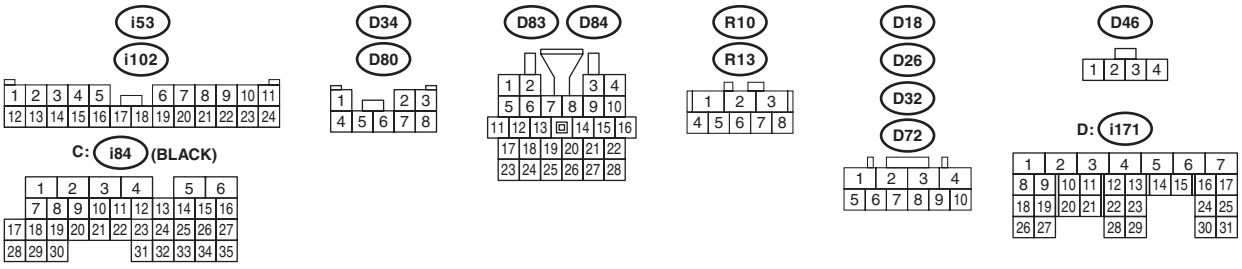
i53
i102
C: i84 (BLACK)
D34
D80
D83 D84
R10
R13
D18
D26
D32
D72
D46
D: i171

WI-48102

K/A-03

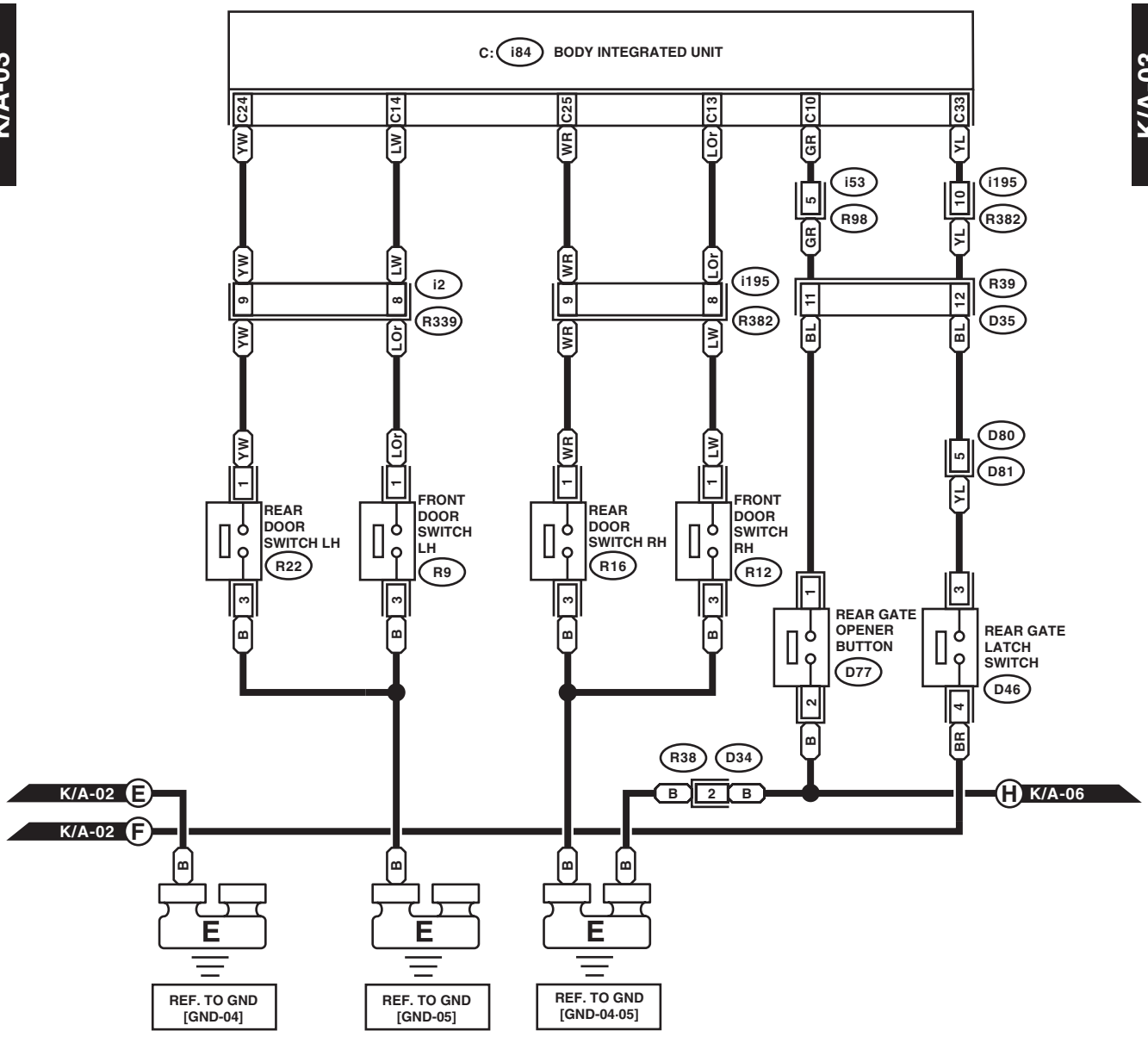

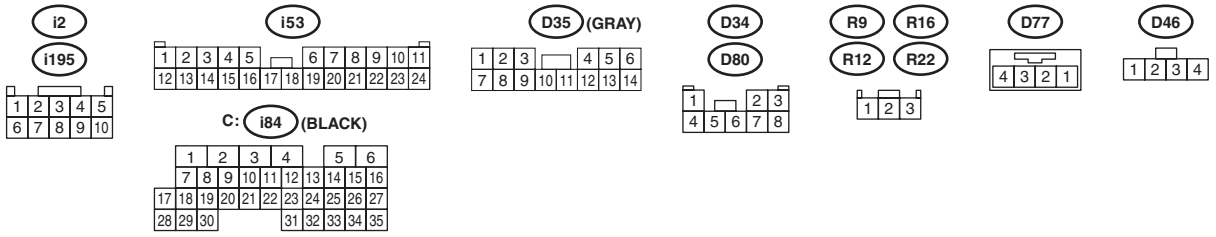

WI-42237

K/A-04

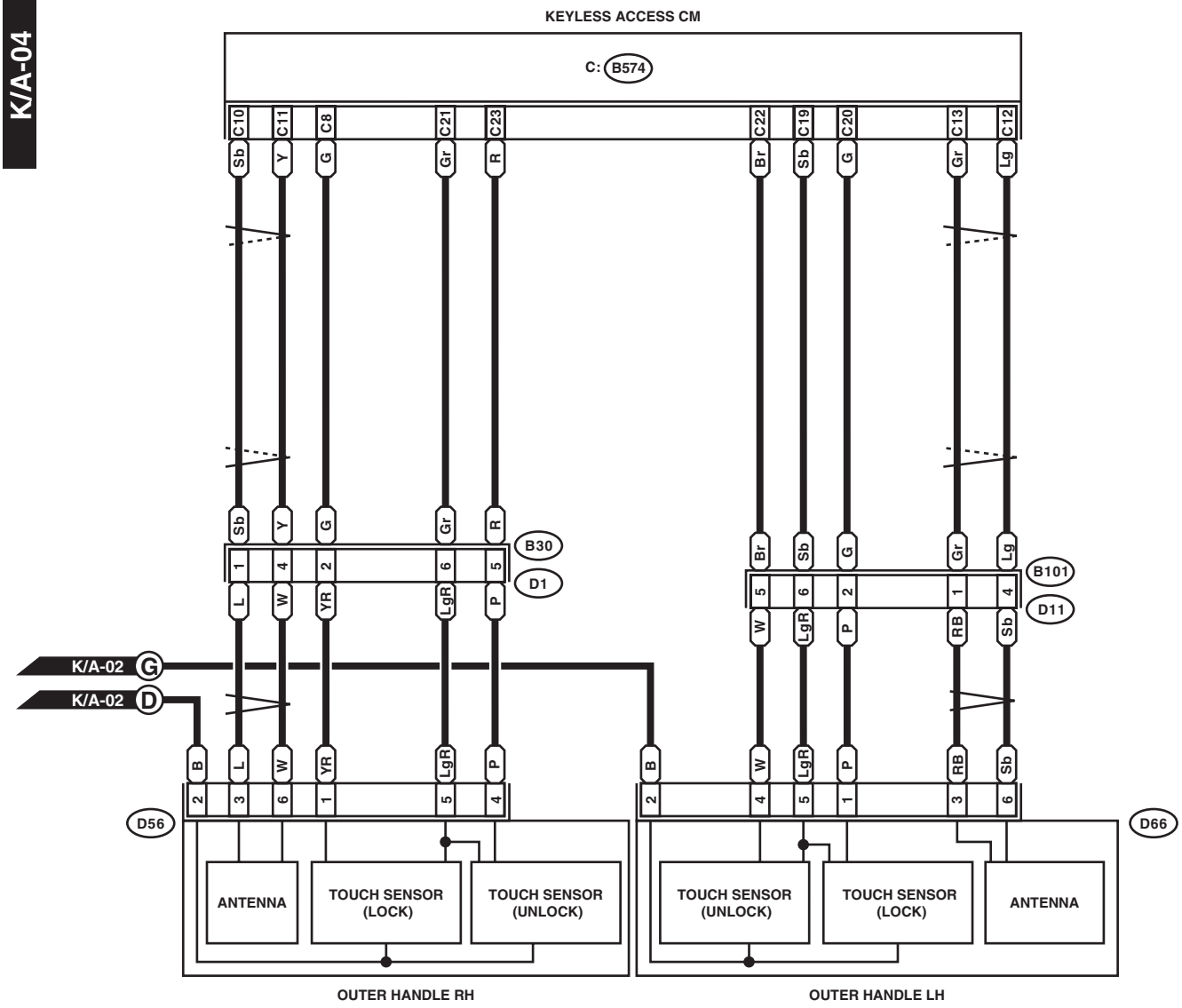

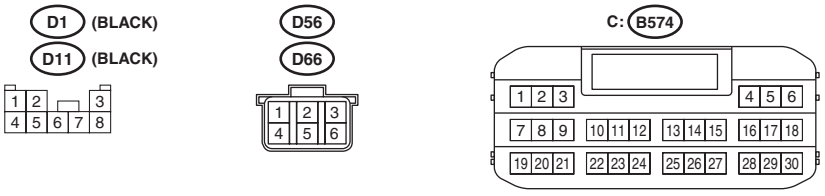

WI-48103

K/A-05

K/A-05

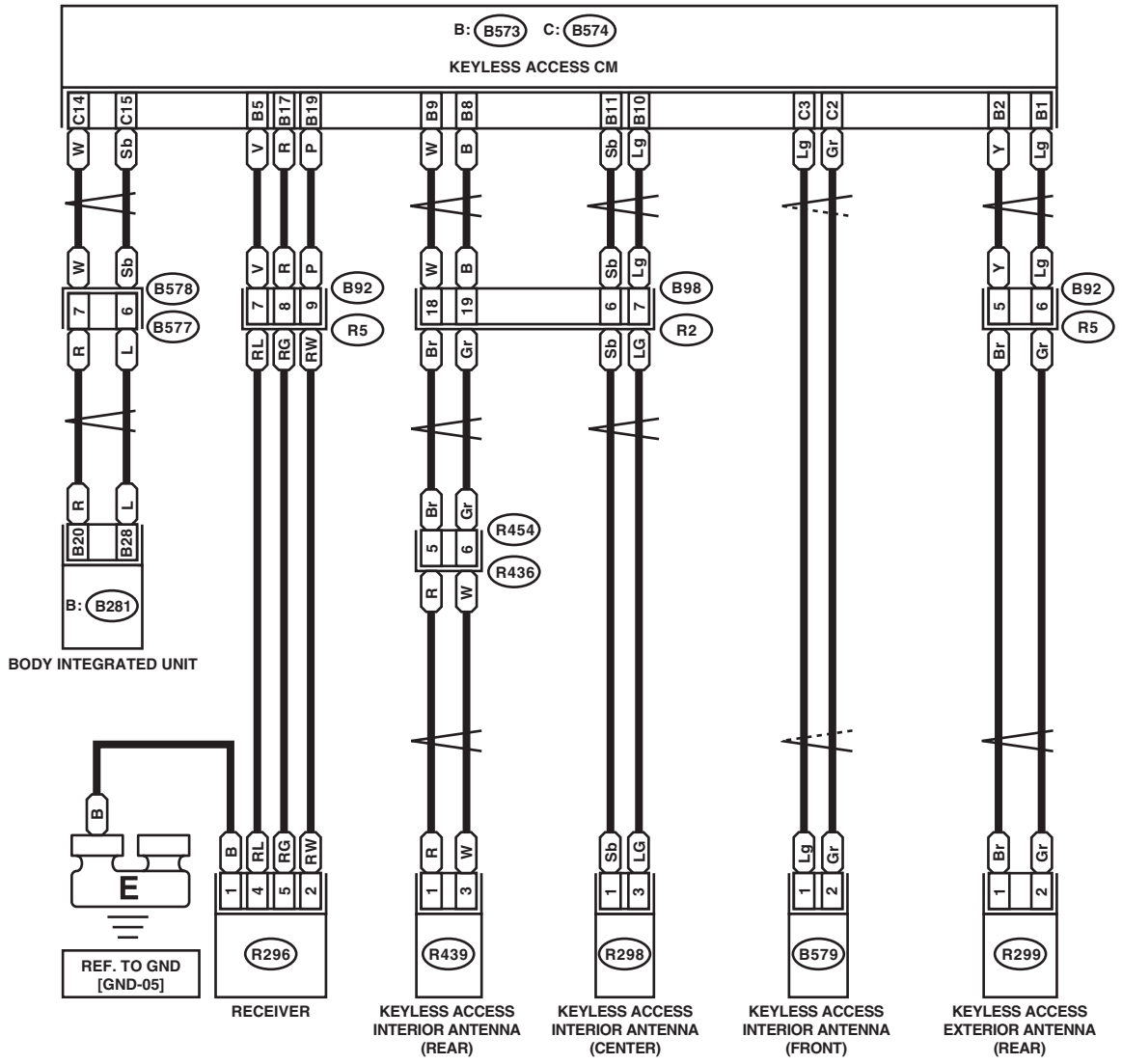

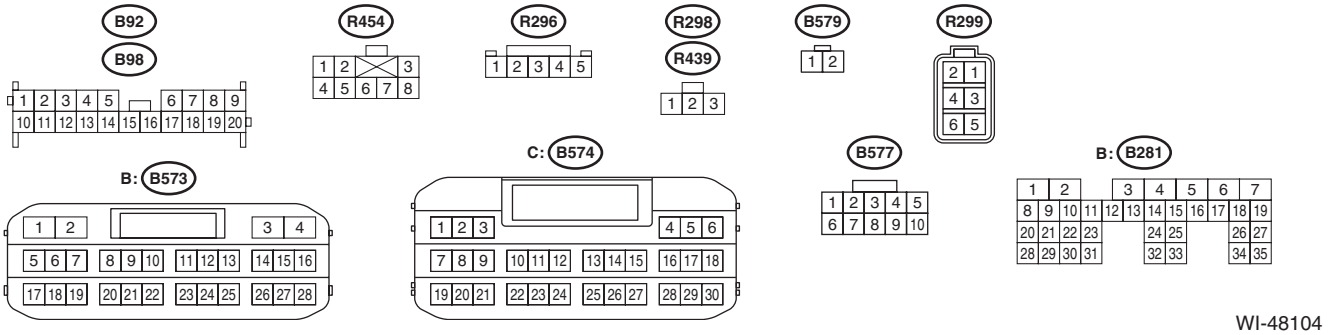

WI-48104

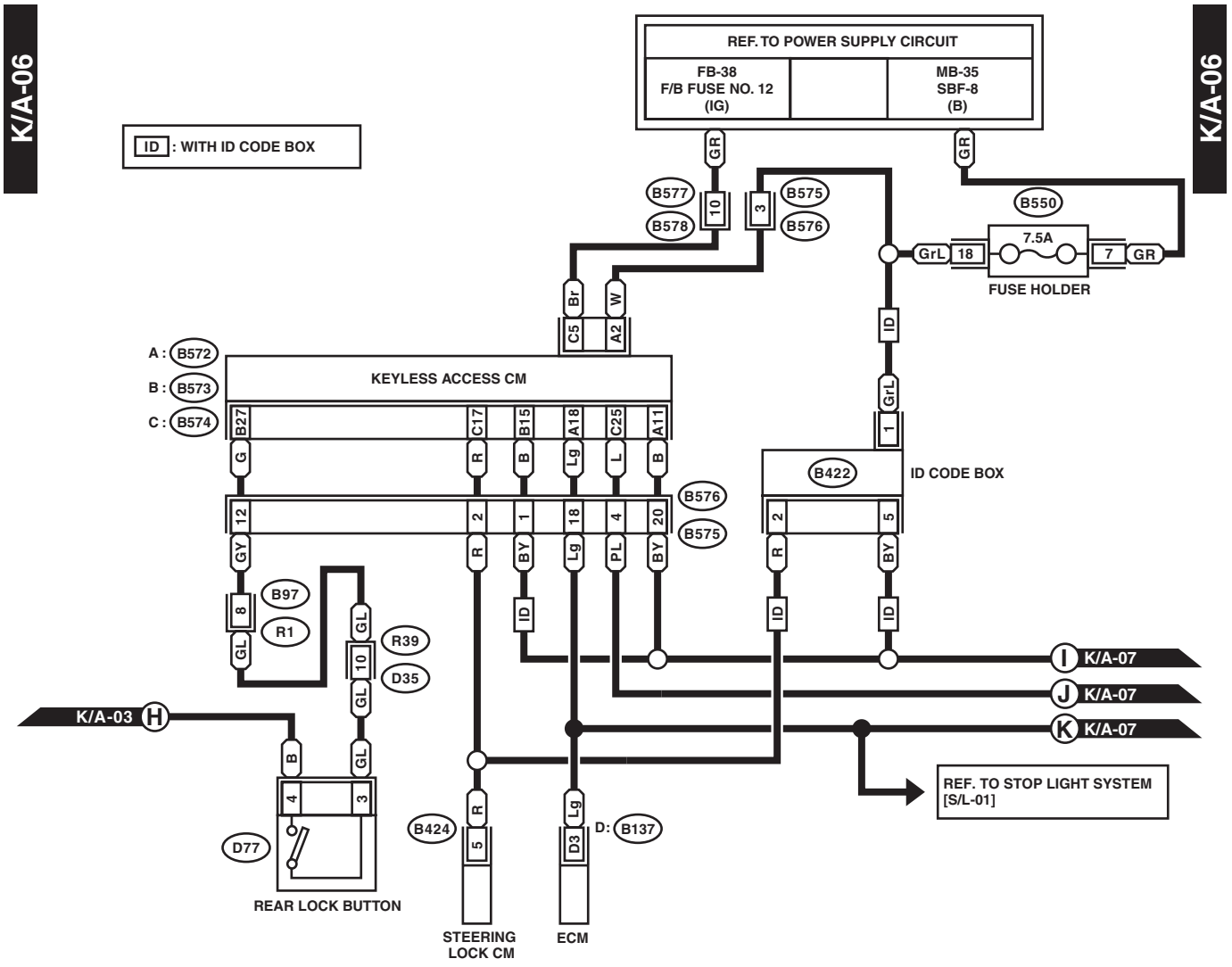
K/A-06
K/A-06
REF. TO POWER SUPPLY CIRCUIT
FB-38
F/B FUSE NO. 12
(IG)
MB-35
SBF-8
(B)
ID : WITH ID CODE BOX
B577
B578
B575
B576
B550
7.5A
GrL 18
7 GR
FUSE HOLDER
A : B572
B : B573
C : B574
KEYLESS ACCESS CM
ID CODE BOX
B422
B97
R1
R39
D35
K/A-03 H
I K/A-07
J K/A-07
K K/A-07
REF. TO STOP LIGHT SYSTEM
[S/L-01]
D77
REAR LOCK BUTTON
B424
D: B137
STEERING
LOCK CM
ECM

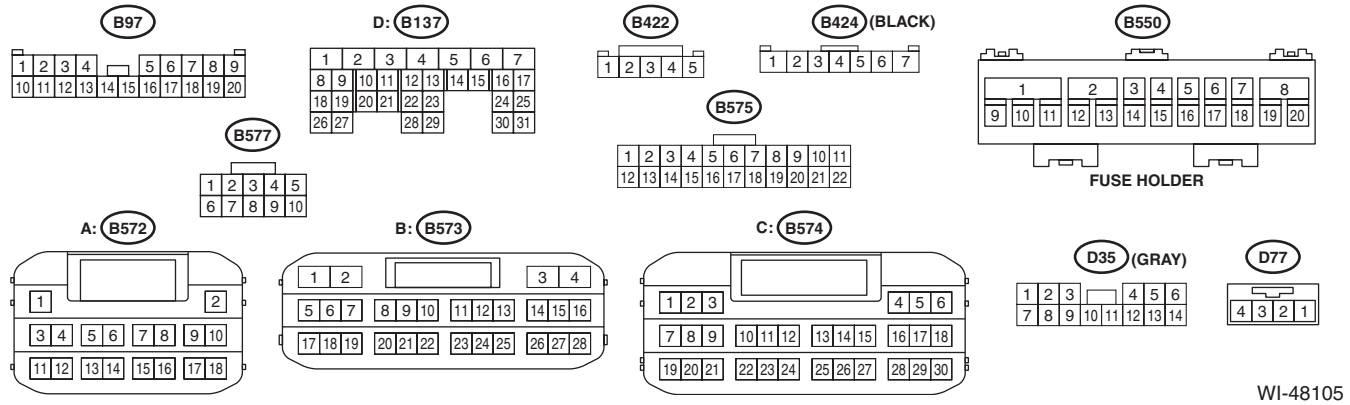
B97
D: B137
B422
B424 (BLACK)
B550
B575
B577
FUSE HOLDER
A: B572
B: B573
C: B574
D35 (GRAY)
D77

WI-48105

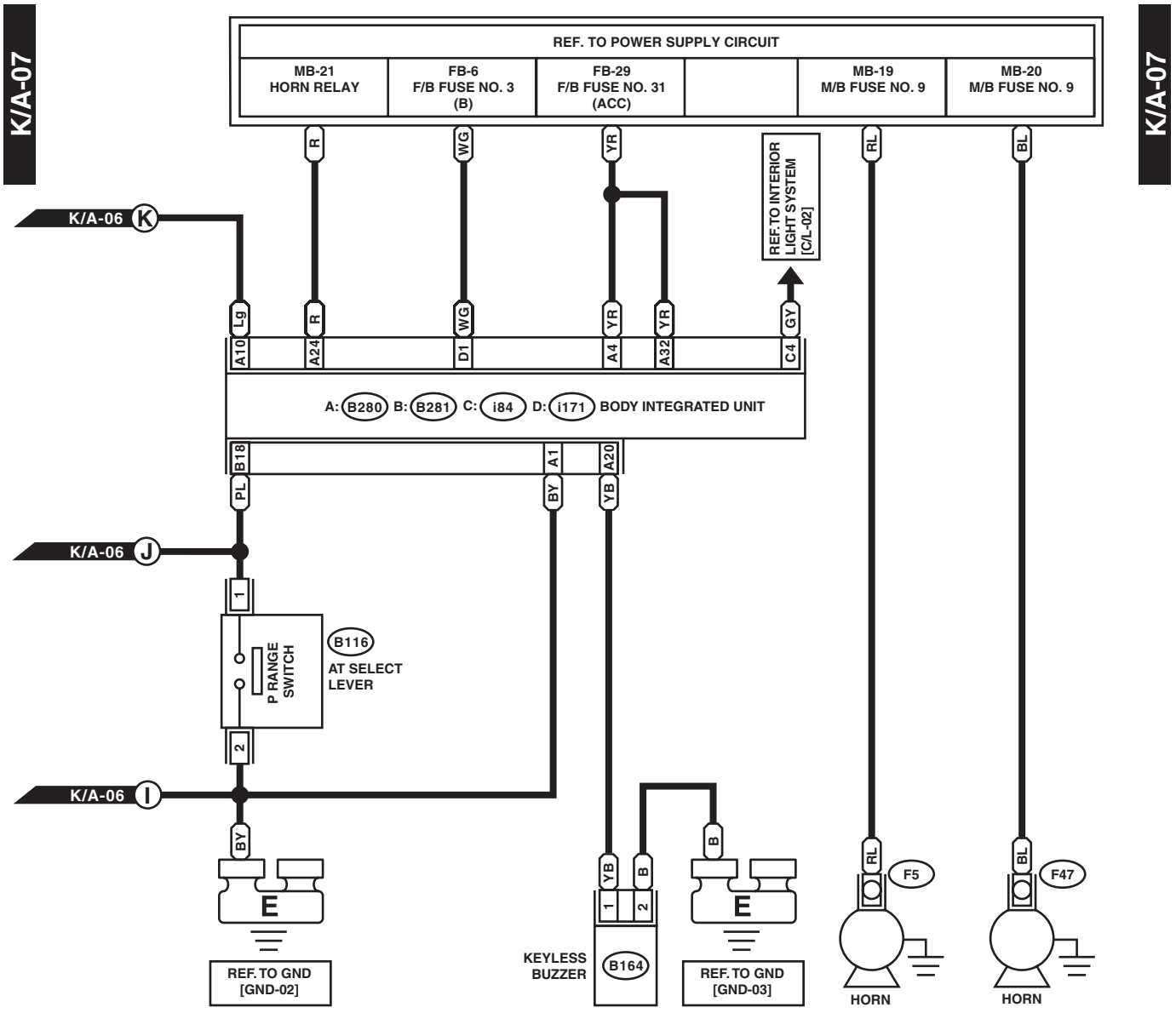
K/A-07
K/A-07
REF. TO POWER SUPPLY CIRCUIT
MB-21 HORN RELAY
FB-6 F/B FUSE NO. 3 (B)
FB-29 F/B FUSE NO. 31 (ACC)
MB-19 M/B FUSE NO. 9
MB-20 M/B FUSE NO. 9
R
WG
YR
RL
BL
REF.TO INTERIOR LIGHT SYSTEM [C/L-02]
K/A-06 K
Lg
R
WG
YR
YR
GY
A10
A24
D1
A4
A32
C4
A: B280 B: B281 C: i84 D: i171 BODY INTEGRATED UNIT
B18
A1
A20
PL
BY
YB
K/A-06 J
1
B116
P RANGE SWITCH
AT SELECT LEVER
2
K/A-06 I
BY
E
REF. TO GND [GND-02]
YB
B
1
2
KEYLESS BUZZER
B164
B
E
REF. TO GND [GND-03]
RL
F5
HORN
BL
F47
HORN

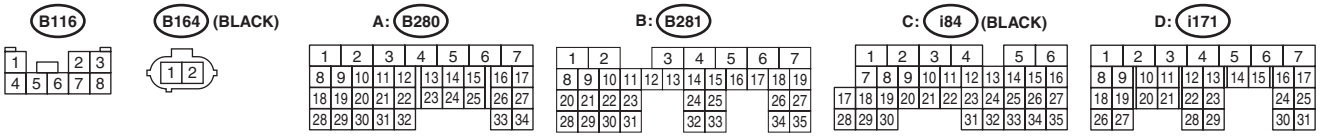
B116
B164 (BLACK)
A: B280
B: B281
C: i84 (BLACK)
D: i171

WI-48106

30.Keyless Entry System

A: WIRING DIAGRAM

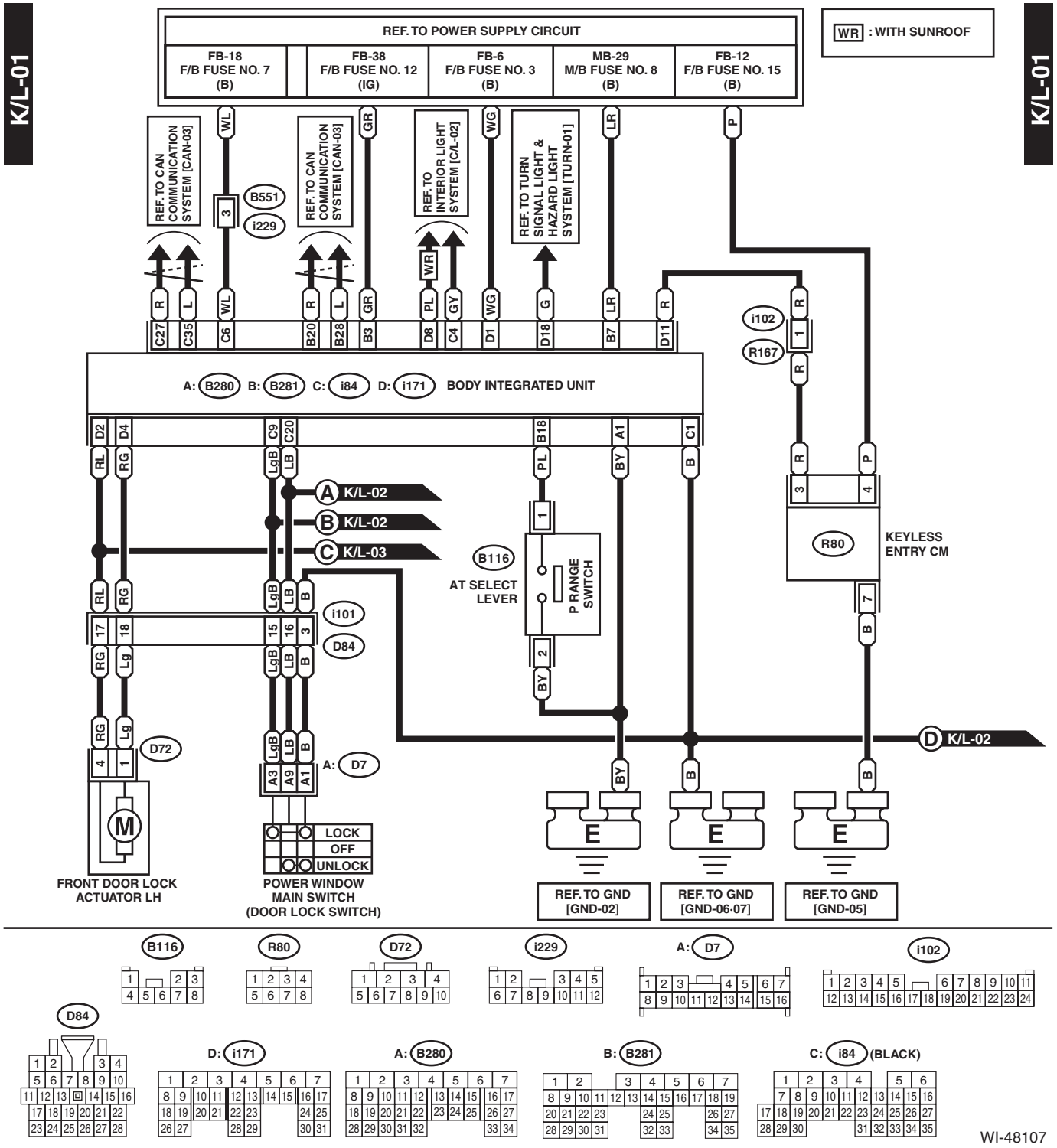

WI-48107

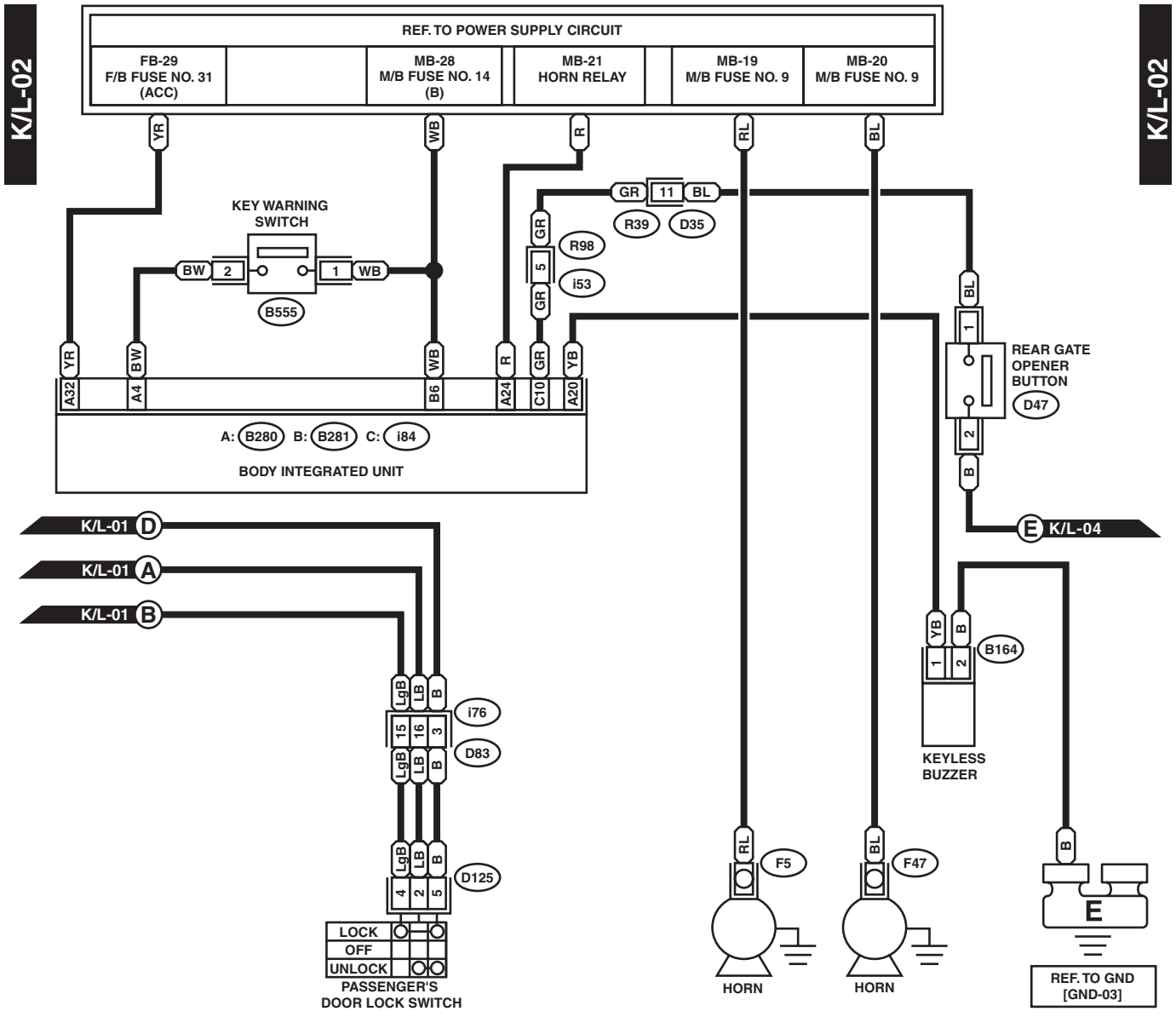
K/L-02
K/L-02
REF. TO POWER SUPPLY CIRCUIT
FB-29
F/B FUSE NO. 31
(ACC)
MB-28
M/B FUSE NO. 14
(B)
MB-21
HORN RELAY
MB-19
M/B FUSE NO. 9
MB-20
M/B FUSE NO. 9
YR
WB
R
RL
BL
KEY WARNING
SWITCH
BW
2
1
WB
B555
GR
11
BL
R39
D35
GR
5
GR
R98
i53
BL
1
REAR GATE
OPENER
BUTTON
D47
2
B
YR
BW
WB
R
GR
YB
A32
A4
B6
A24
C10
A20
A: B280 B: B281 C: i84
BODY INTEGRATED UNIT
K/L-01 D
K/L-01 A
K/L-01 B
E K/L-04
YB
B
B164
1
2
KEYLESS
BUZZER
LgB
LB
B
15
16
3
i76
D83
LgB
LB
B
4
2
5
D125
LOCK
OFF
UNLOCK
PASSENGER'S
DOOR LOCK SWITCH
RL
F5
HORN
BL
F47
HORN
B
E
REF. TO GND
[GND-03]

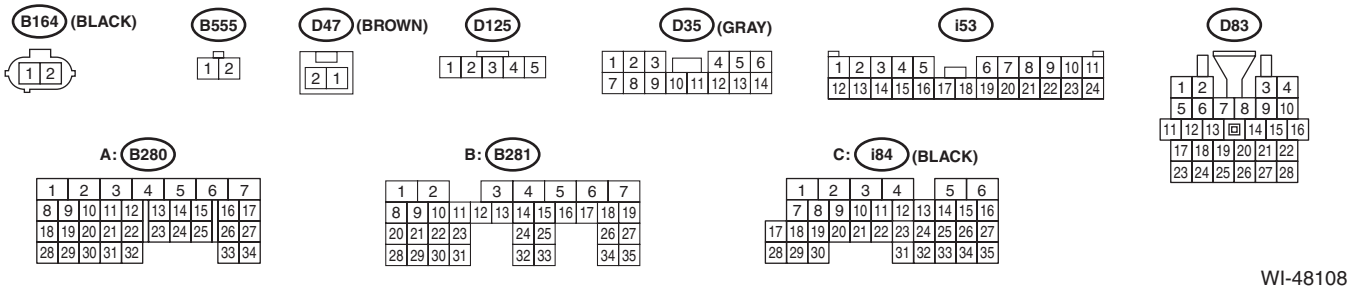
B164 (BLACK)
B555
D47 (BROWN)
D125
D35 (GRAY)
i53
D83
A: B280
B: B281
C: i84 (BLACK)

WI-48108

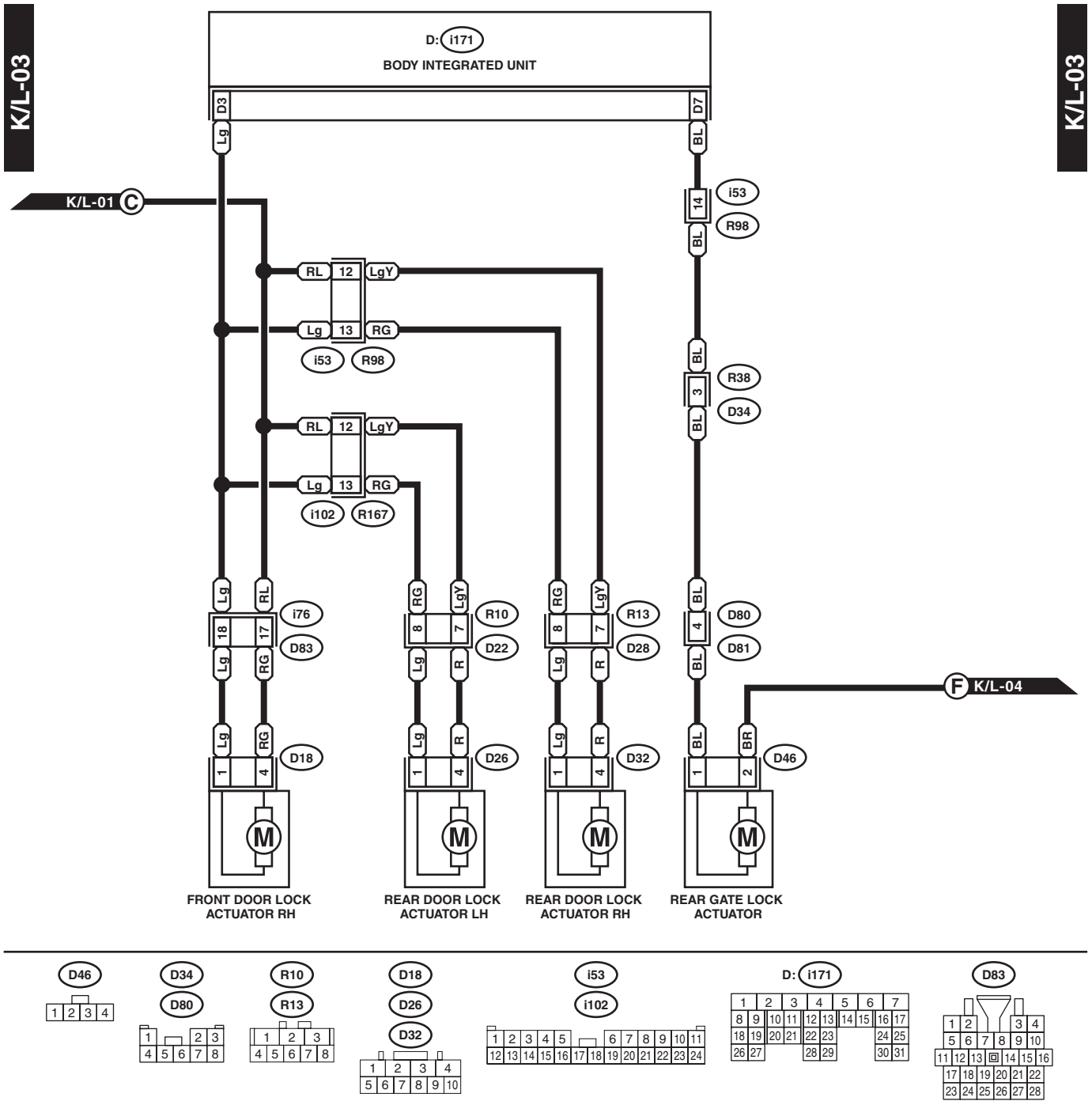
K/L-03
K/L-03
D: i171
BODY INTEGRATED UNIT
D3
D7
Lg
BL
K/L-01 C
i53
14
R98
BL
RL
12
LgY
Lg
13
RG
i53
R98
BL
R38
3
D34
BL
RL
12
LgY
Lg
13
RG
i102
R167
Lg
RL
RG
LgY
BL
i76
18
17
D83
R10
8
7
D22
R13
D28
D80
4
D81
Lg
RG
R
BL
F K/L-04
Lg
RG
D18
1
4
Lg
R
D26
Lg
R
D32
BL
BR
D46
1
2
M
M
M
M
FRONT DOOR LOCK ACTUATOR RH
REAR DOOR LOCK ACTUATOR LH
REAR DOOR LOCK ACTUATOR RH
REAR GATE LOCK ACTUATOR
D46
1 2 3 4
D34
D80
1 2 3
4 5 6 7 8
R10
R13
1 2 3
4 5 6 7 8
D18
D26
D32
1 2 3 4
5 6 7 8 9 10
i53
i102
1 2 3 4 5 6 7 8 9 10 11
12 13 14 15 16 17 18 19 20 21 22 23 24
D: i171
1 2 3 4 5 6 7
8 9 10 11 12 13 14 15 16 17
18 19 20 21 22 23 24 25
26 27 28 29 30 31
D83
1 2 3 4
5 6 7 8 9 10
11 12 13 14 15 16
17 18 19 20 21 22
23 24 25 26 27 28

WI-48109

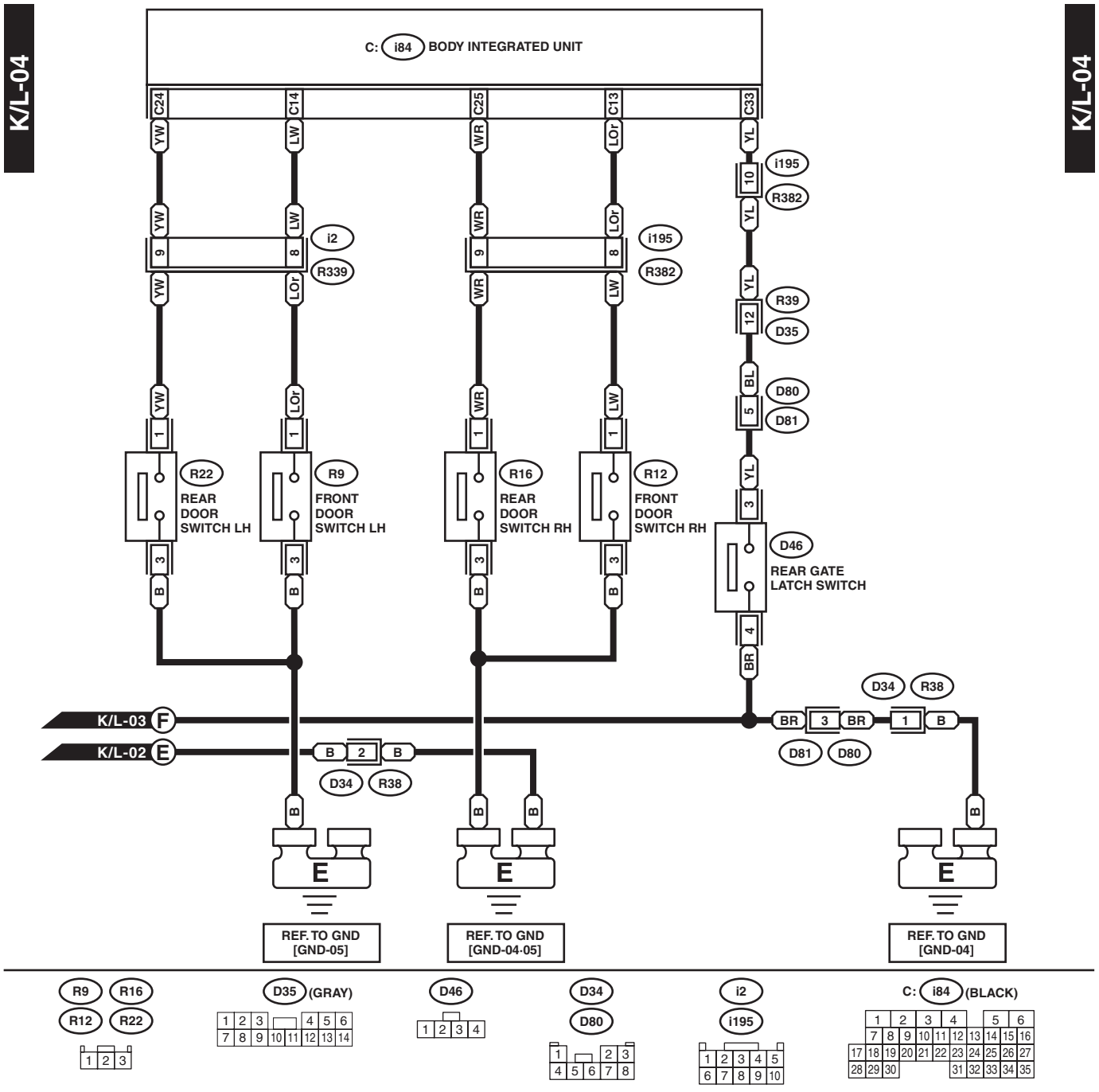
K/L-04
K/L-04
C: i84 BODY INTEGRATED UNIT
C24
C14
C25
C13
C33
YW
LW
WR
LOr
YL
i195
10
R382
i2
9
8
R339
i195
R382
R39
12
D35
BL
5
D80
D81
1
R22
REAR DOOR SWITCH LH
R9
FRONT DOOR SWITCH LH
R16
REAR DOOR SWITCH RH
R12
FRONT DOOR SWITCH RH
3
D46
REAR GATE LATCH SWITCH
4
BR
B
D34
R38
K/L-03 F
K/L-02 E
2
D81
D80
E
REF. TO GND [GND-05]
REF. TO GND [GND-04·05]
REF. TO GND [GND-04]
R9
R16
R12
R22
D35 (GRAY)
D46
D34
D80
i2
i195
C: i84 (BLACK)

WI-42245

31.Multi-function Display (MFD) System

A: WIRING DIAGRAM

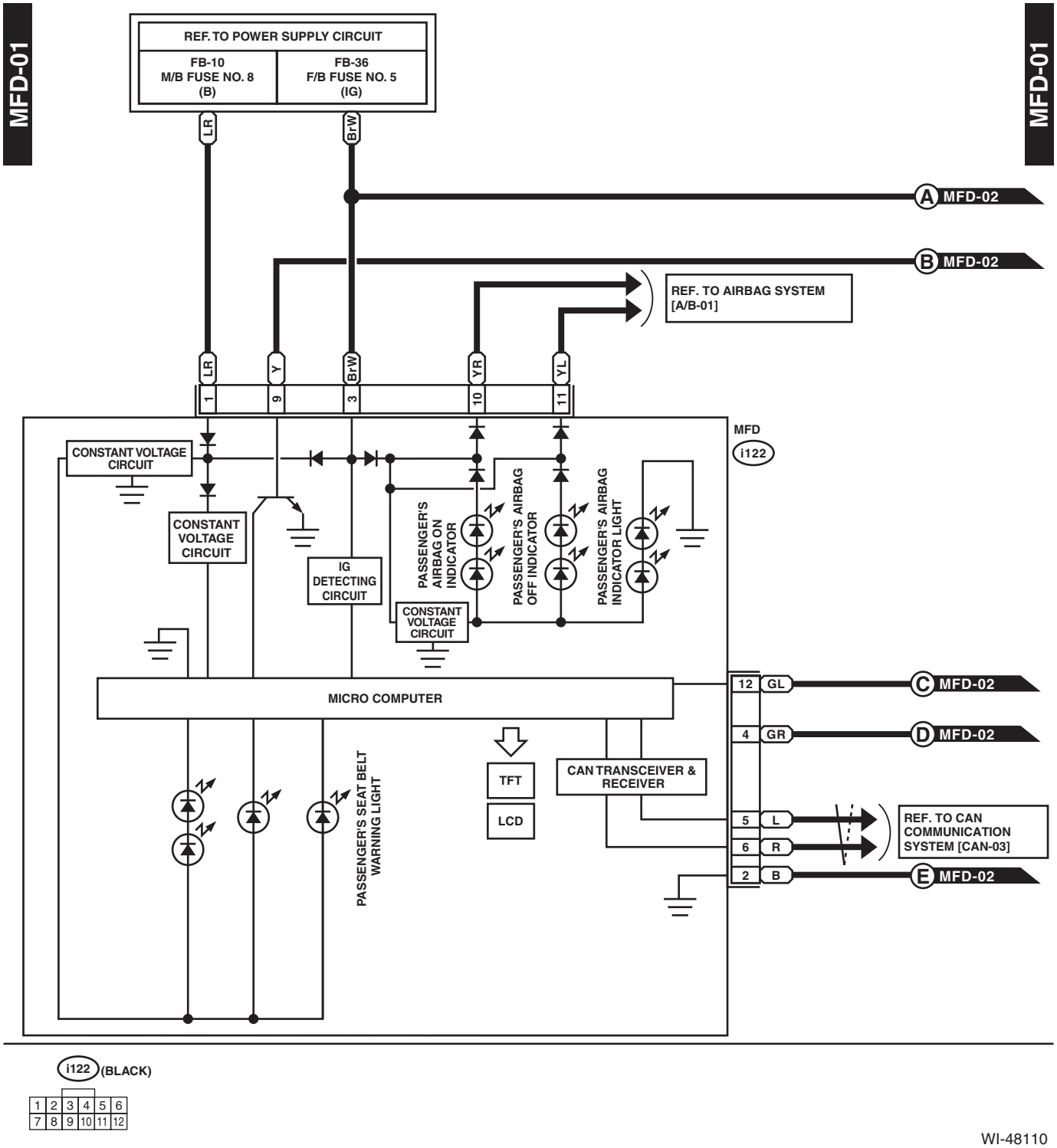

WI-48110

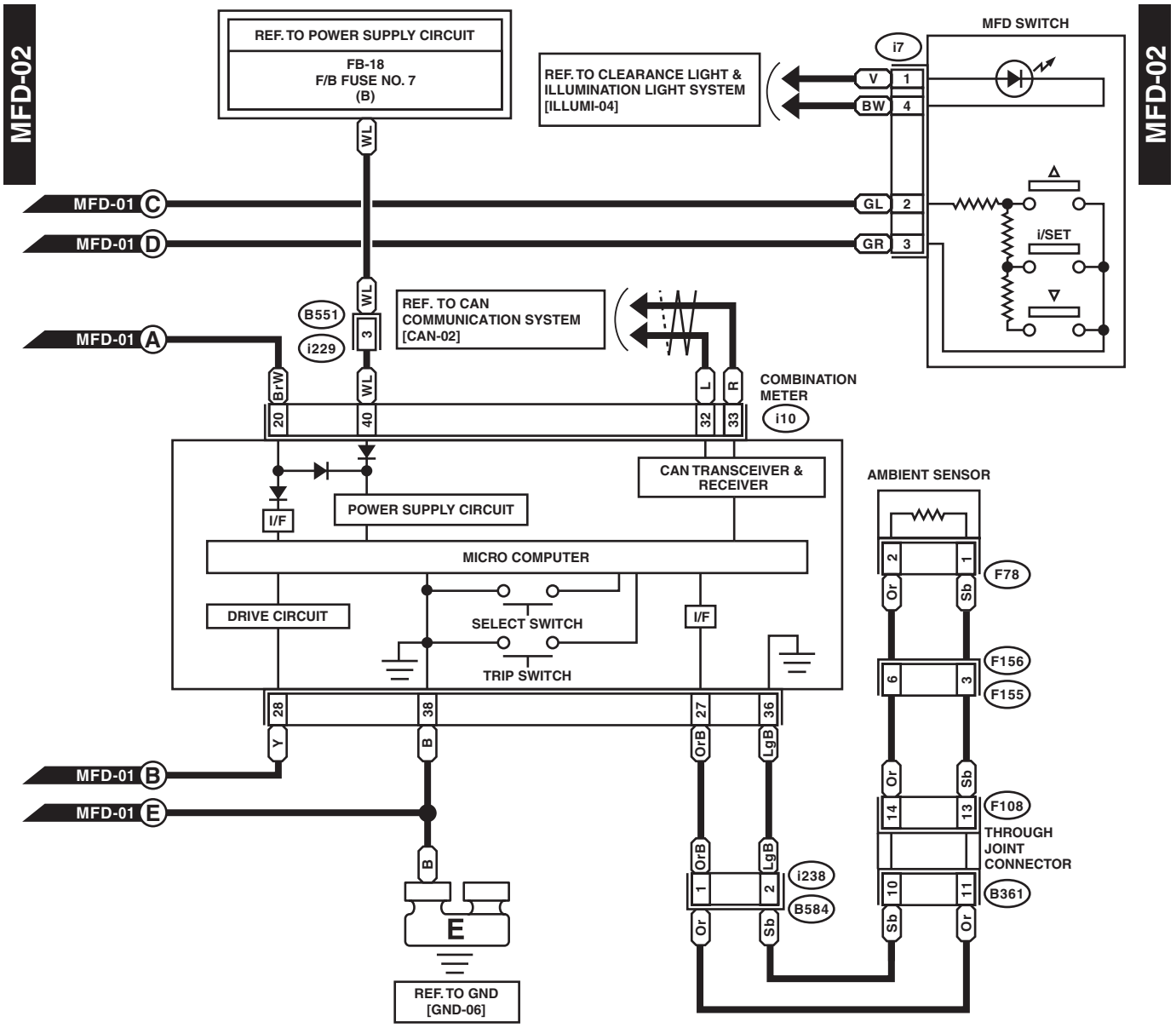
MFD-02
MFD-02
REF. TO POWER SUPPLY CIRCUIT
FB-18
F/B FUSE NO. 7
(B)
REF. TO CLEARANCE LIGHT & ILLUMINATION LIGHT SYSTEM [ILLUMI-04]
MFD SWITCH
i7
V 1
BW 4
GL 2
GR 3
i/SET
MFD-01 C
MFD-01 D
MFD-01 A
MFD-01 B
MFD-01 E
B551
i229
REF. TO CAN COMMUNICATION SYSTEM [CAN-02]
COMBINATION METER
i10
CAN TRANSCEIVER & RECEIVER
POWER SUPPLY CIRCUIT
I/F
MICRO COMPUTER
DRIVE CIRCUIT
SELECT SWITCH
TRIP SWITCH
AMBIENT SENSOR
F78
F156
F155
F108
THROUGH JOINT CONNECTOR
B361
i238
B584
REF. TO GND [GND-06]

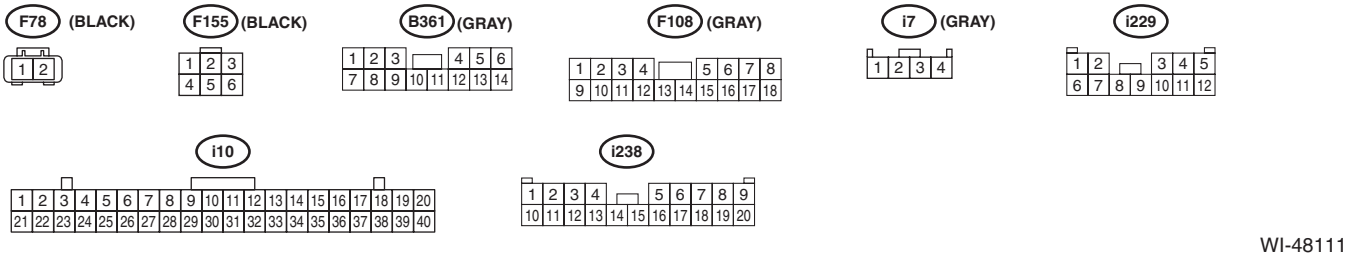
F78 (BLACK)
F155 (BLACK)
B361 (GRAY)
F108 (GRAY)
i7 (GRAY)
i229
i10
i238

WI-48111

32.Navigation System

A: WIRING DIAGRAM

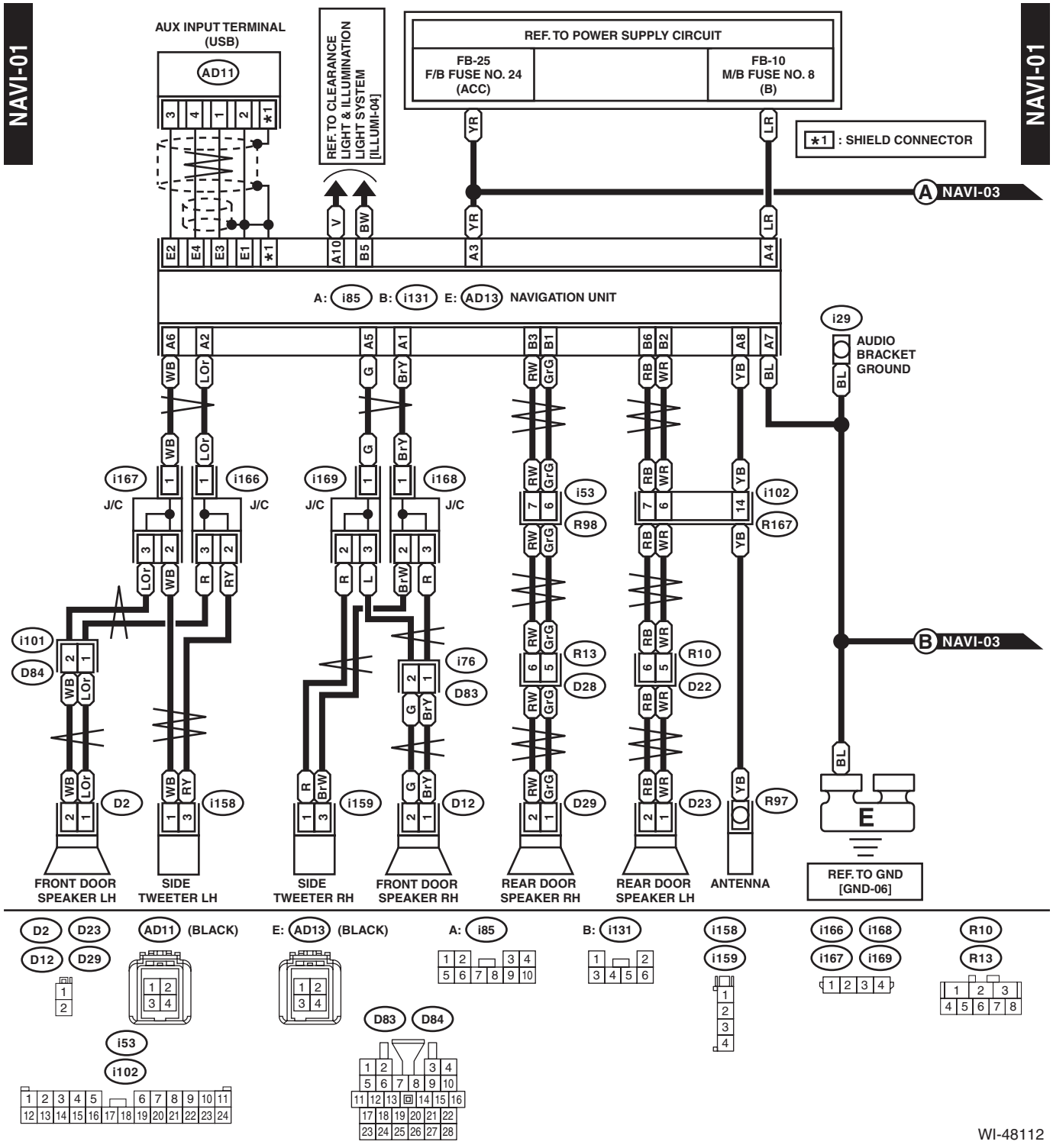

WIRING SYSTEM

NAVI-02

NAVI-02

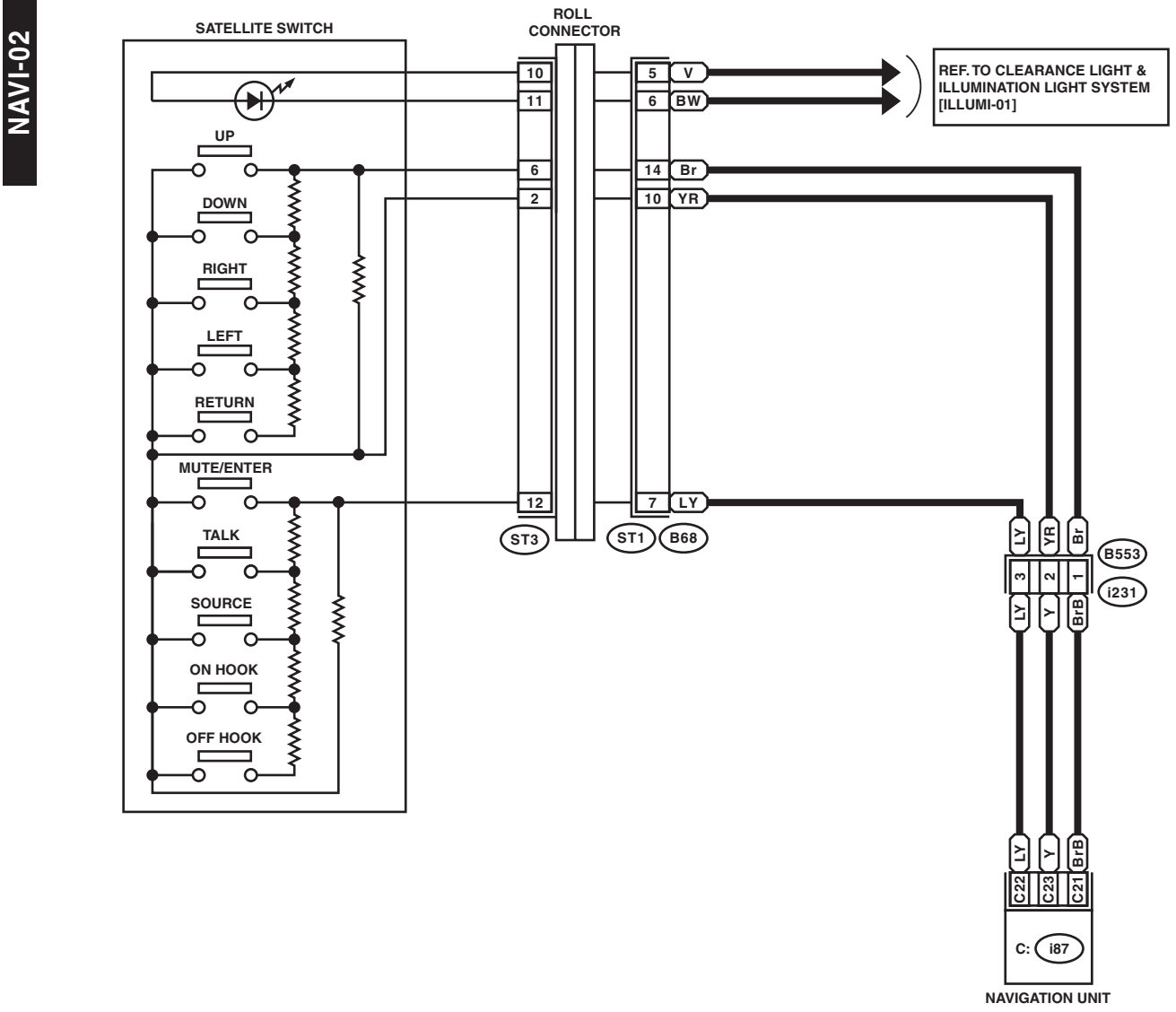

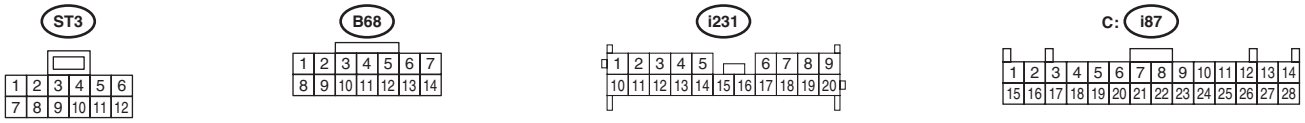

WI-48113

NAVI-03

NAVI-03

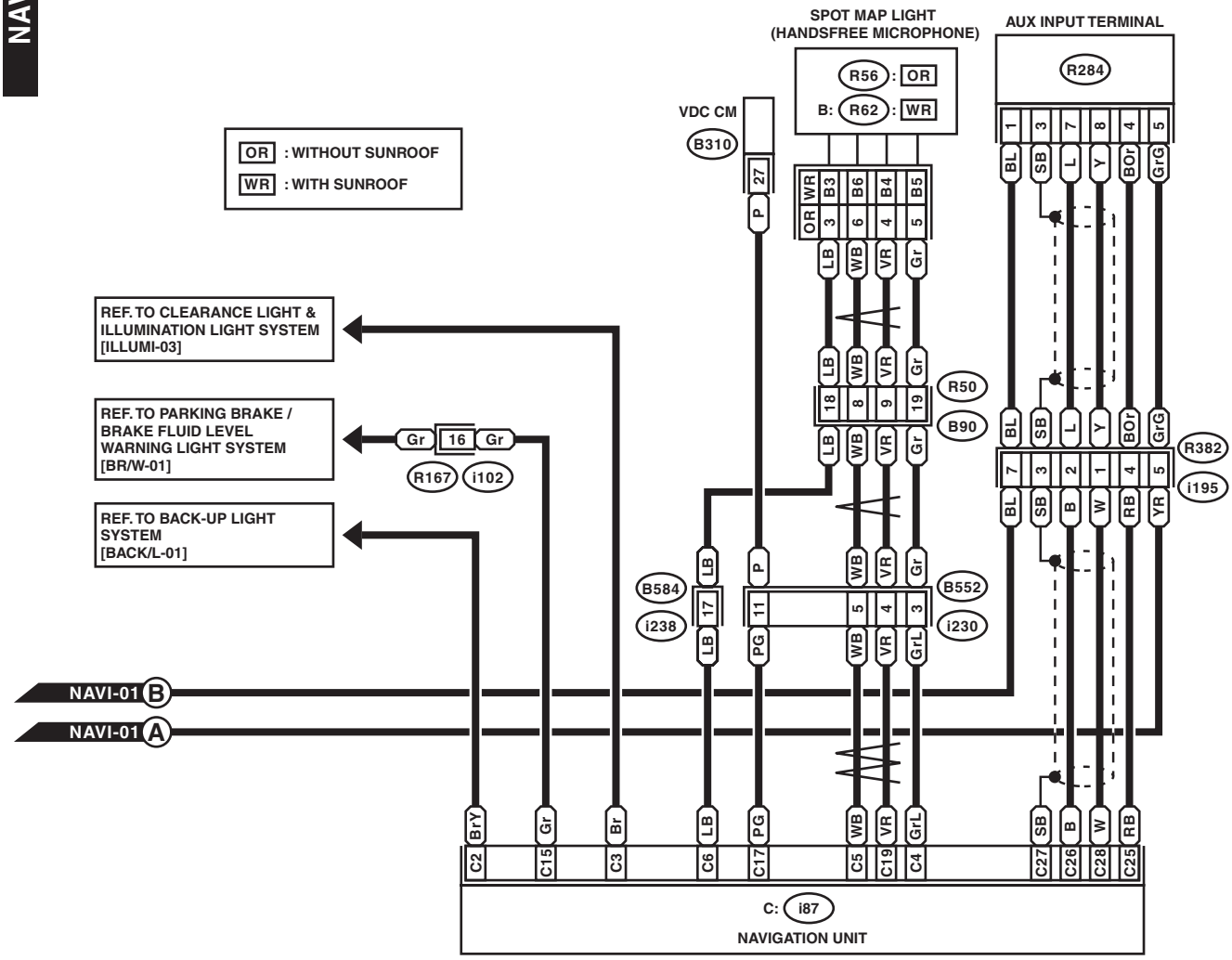

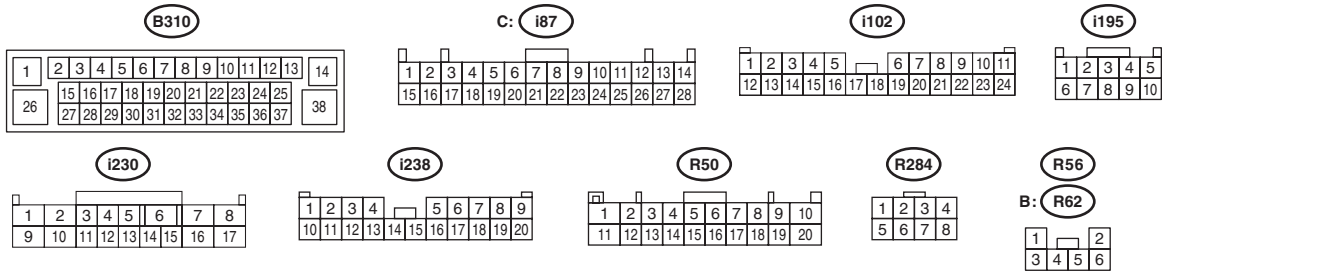

WI-48114

33.Occupant Detection System

A: WIRING DIAGRAM

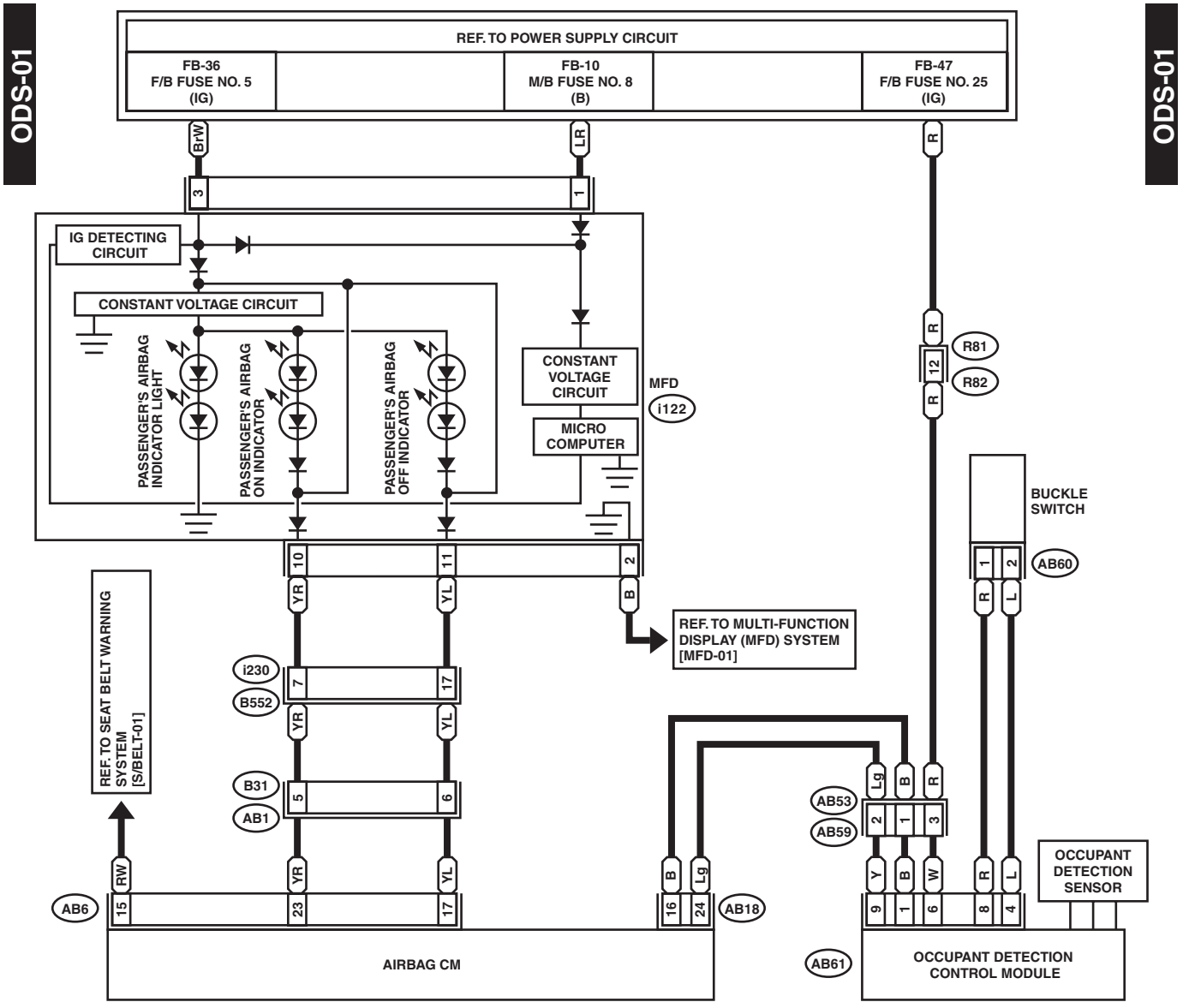

34.Oil Pressure Warning Light System

A: WIRING DIAGRAM

OIL/P-01

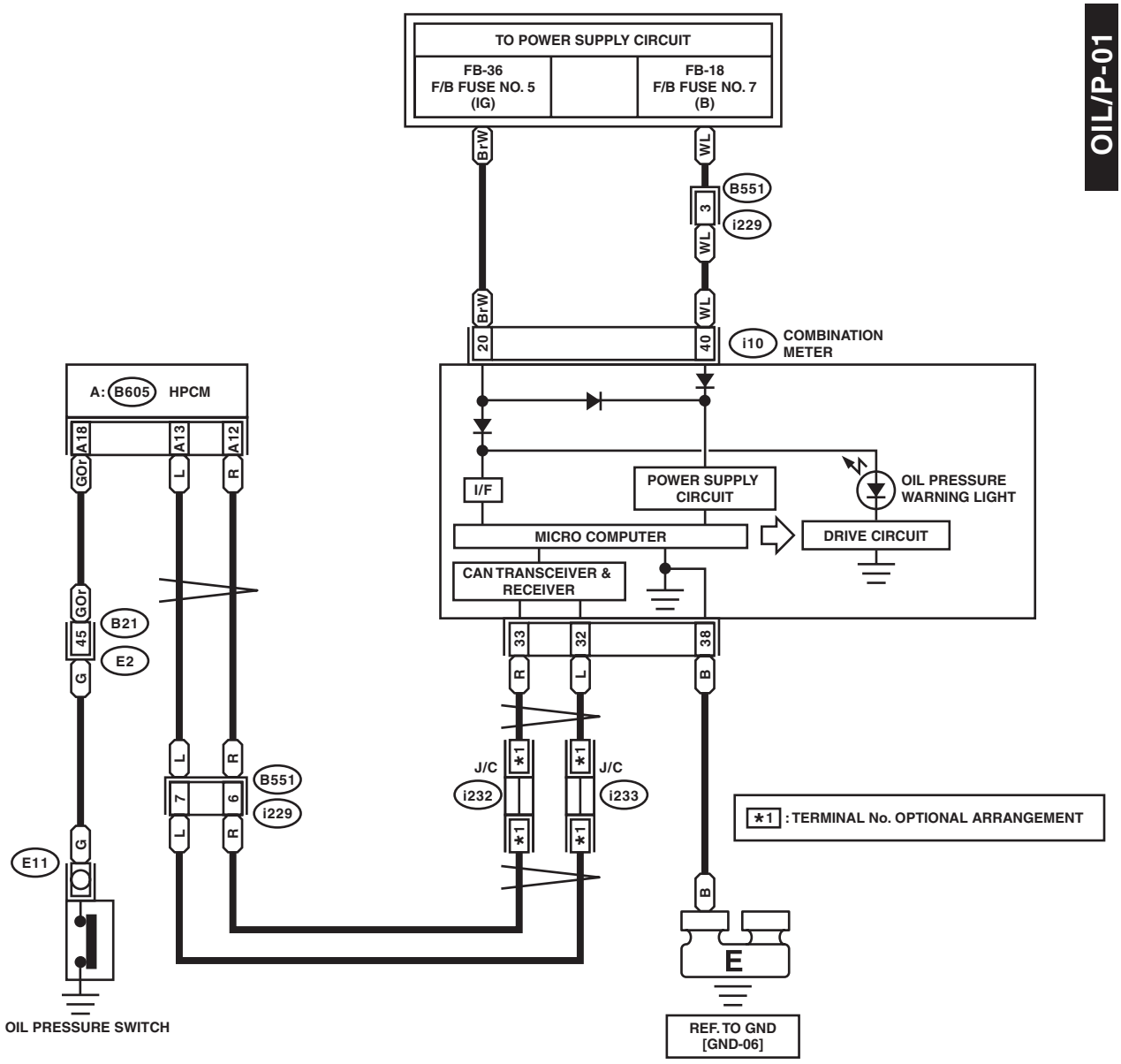

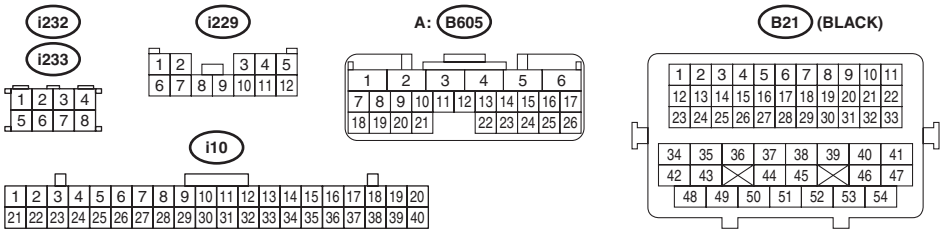

WI-42251

OIL/P-01

35.Parking Brake / Brake Fluid Level Warning Light System

A: WIRING DIAGRAM

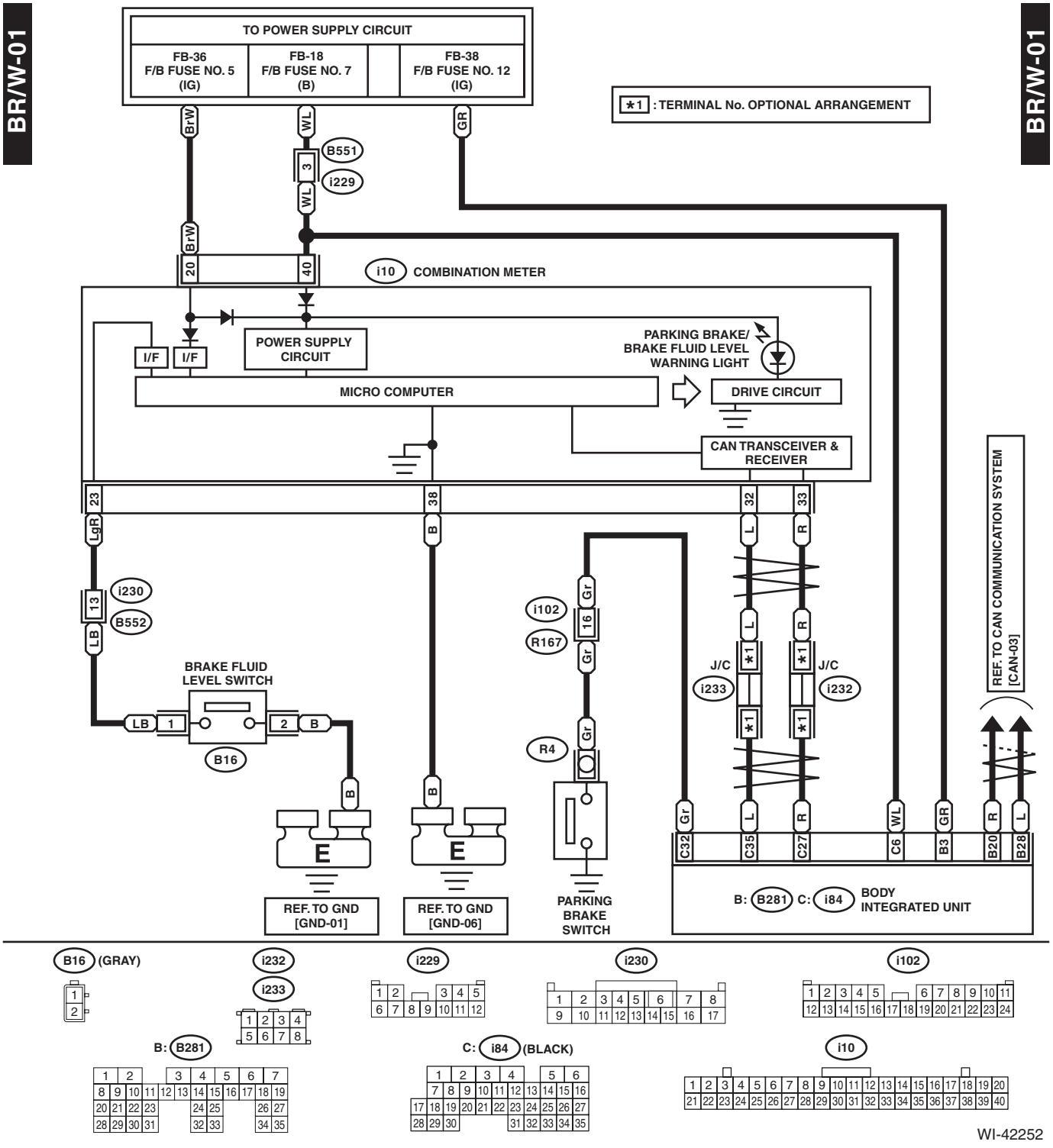

WI-42252

36.Power Window System

A: WIRING DIAGRAM

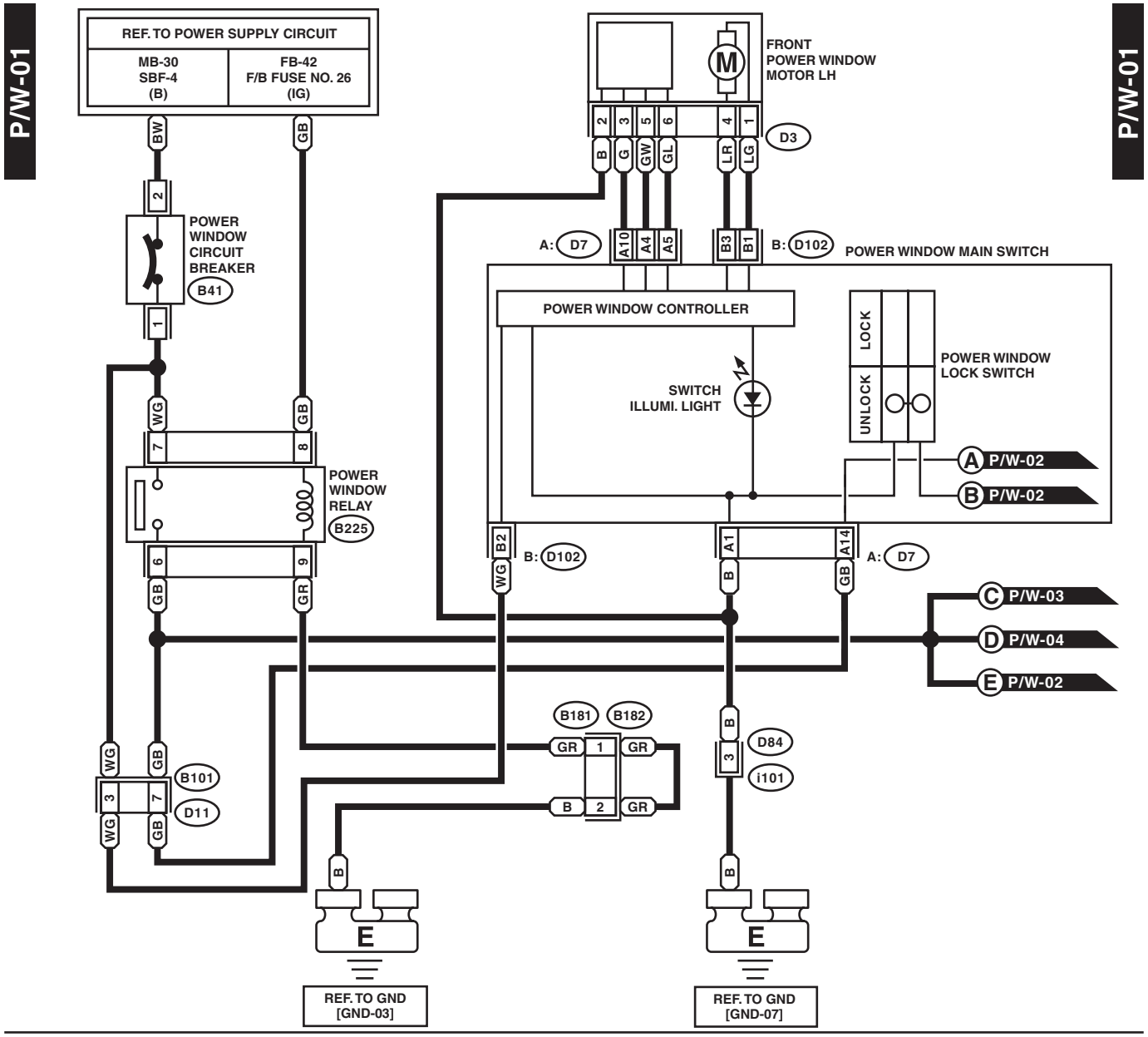

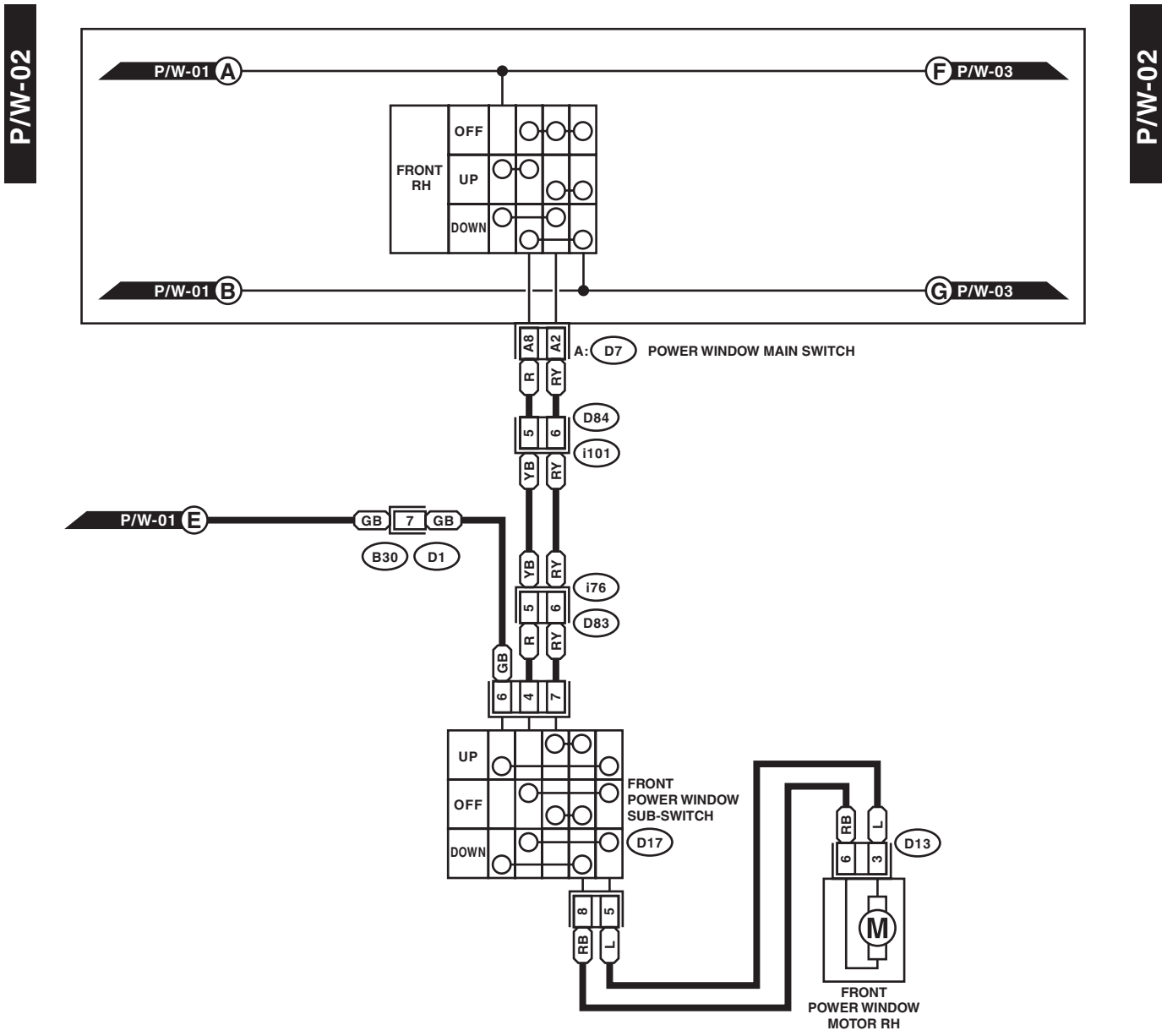
P/W-02
P/W-02
P/W-01 A
F P/W-03
FRONT RH
OFF
UP
DOWN
P/W-01 B
G P/W-03
A8
A2
A: D7 POWER WINDOW MAIN SWITCH
R
RY
D84
5
6
i101
YB
RY
P/W-01 E
GB
7
GB
B30
D1
YB
RY
i76
5
6
D83
R
RY
GB
6
4
7
UP
OFF
DOWN
FRONT POWER WINDOW SUB-SWITCH
D17
8
5
RB
L
RB
L
D13
6
3
M
FRONT POWER WINDOW MOTOR RH

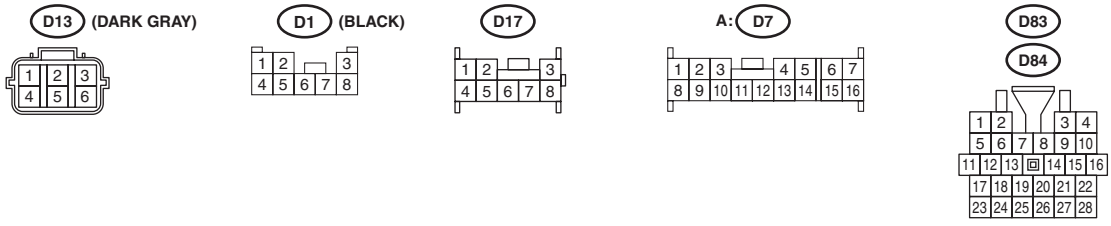
D13 (DARK GRAY)
D1 (BLACK)
D17
A: D7
D83
D84

WI-48719

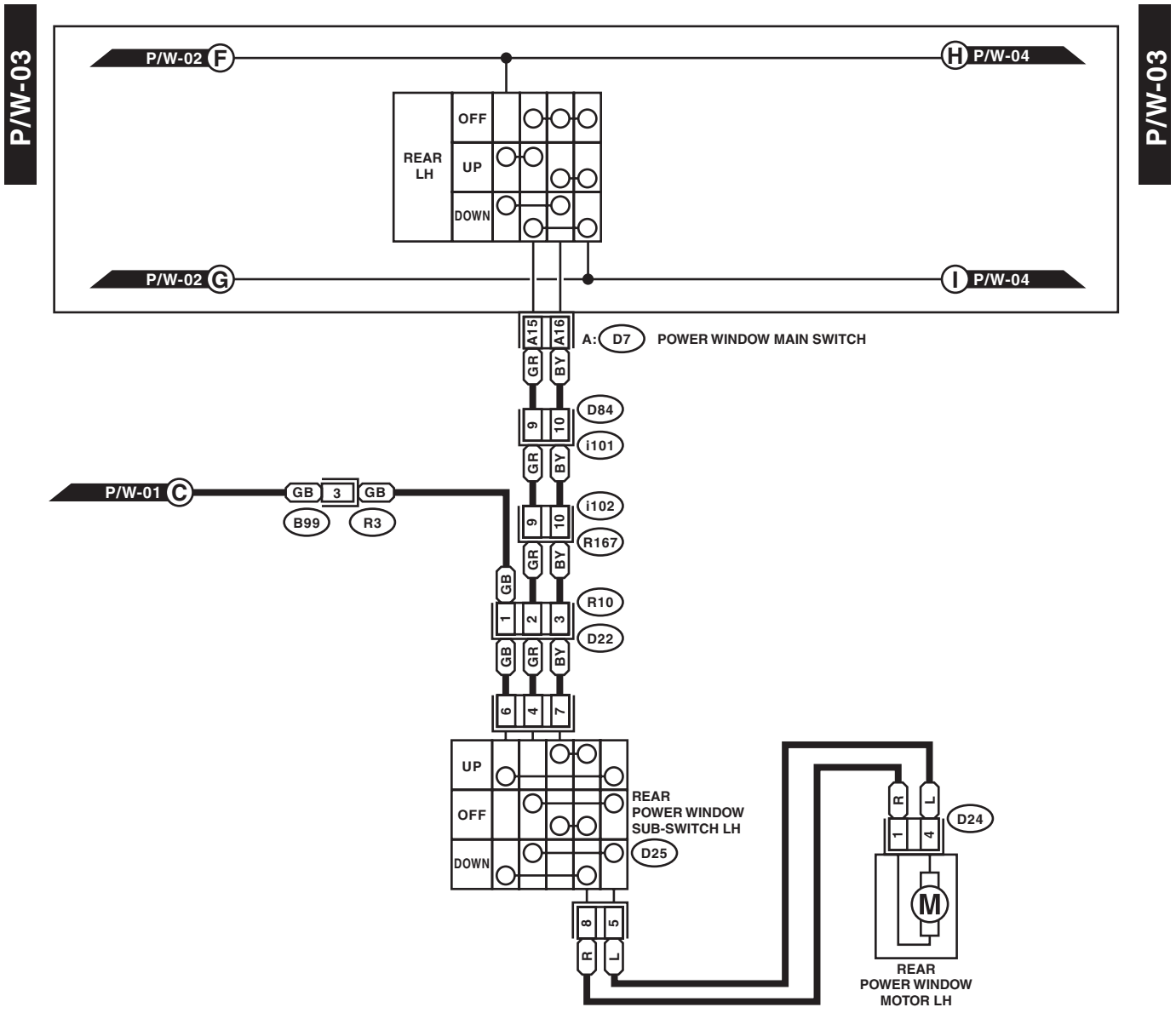
P/W-03
P/W-03
P/W-02 F
H P/W-04
REAR LH
OFF
UP
DOWN
P/W-02 G
I P/W-04
A15
A16
A: D7 POWER WINDOW MAIN SWITCH
GR
BY
D84
9
10
i101
P/W-01 C
GB
3
B99
R3
i102
R167
R10
1
2
D22
6
4
7
UP
OFF
DOWN
REAR POWER WINDOW SUB-SWITCH LH
D25
8
5
R
L
D24
M
REAR POWER WINDOW MOTOR LH

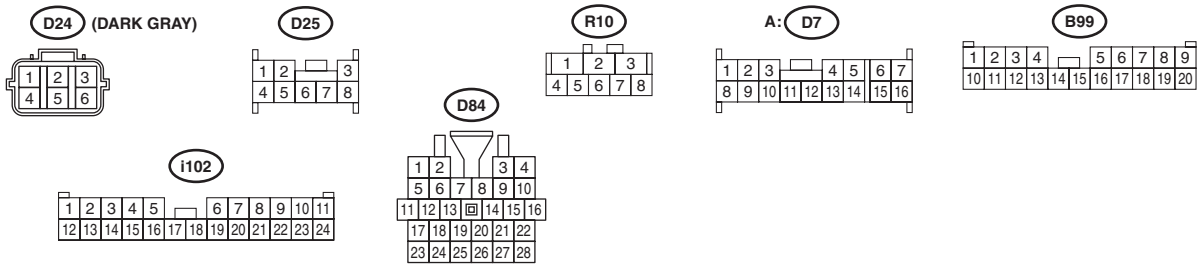
D24 (DARK GRAY)
D25
R10
A: D7
B99
i102
D84

WI-48720

P/W-04

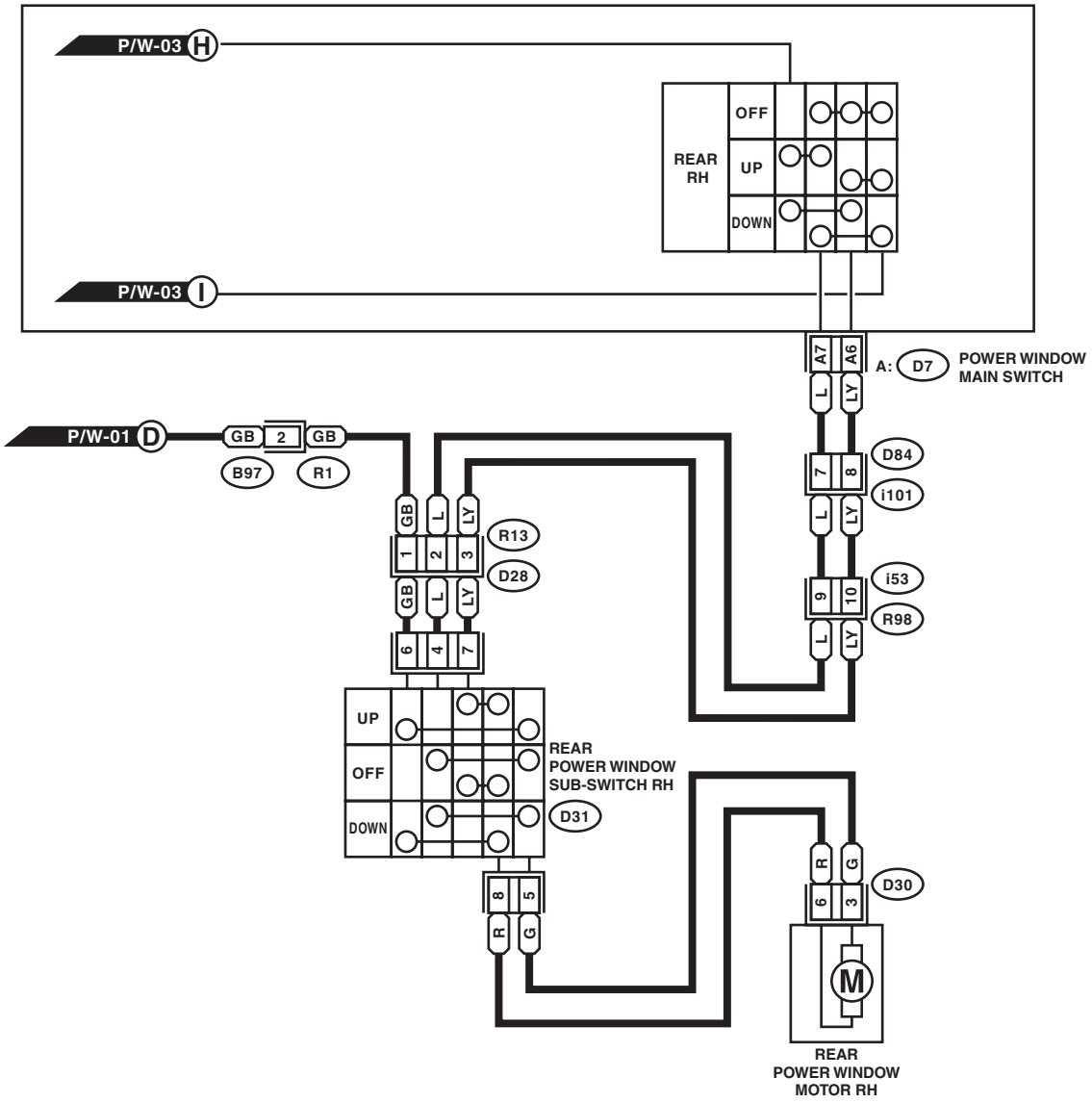

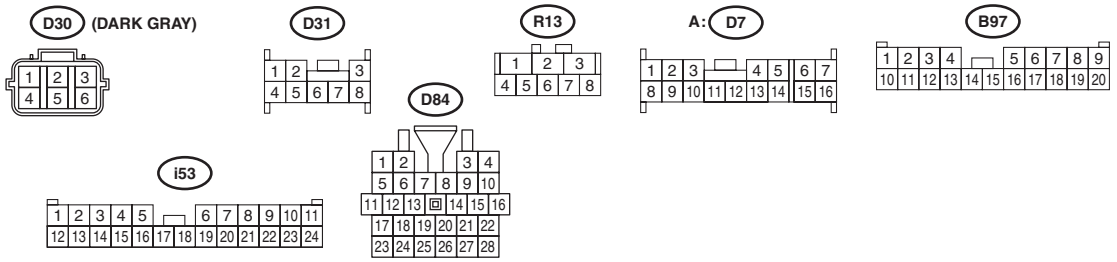

WI-48721

37.Push Button Start System

A: WIRING DIAGRAM

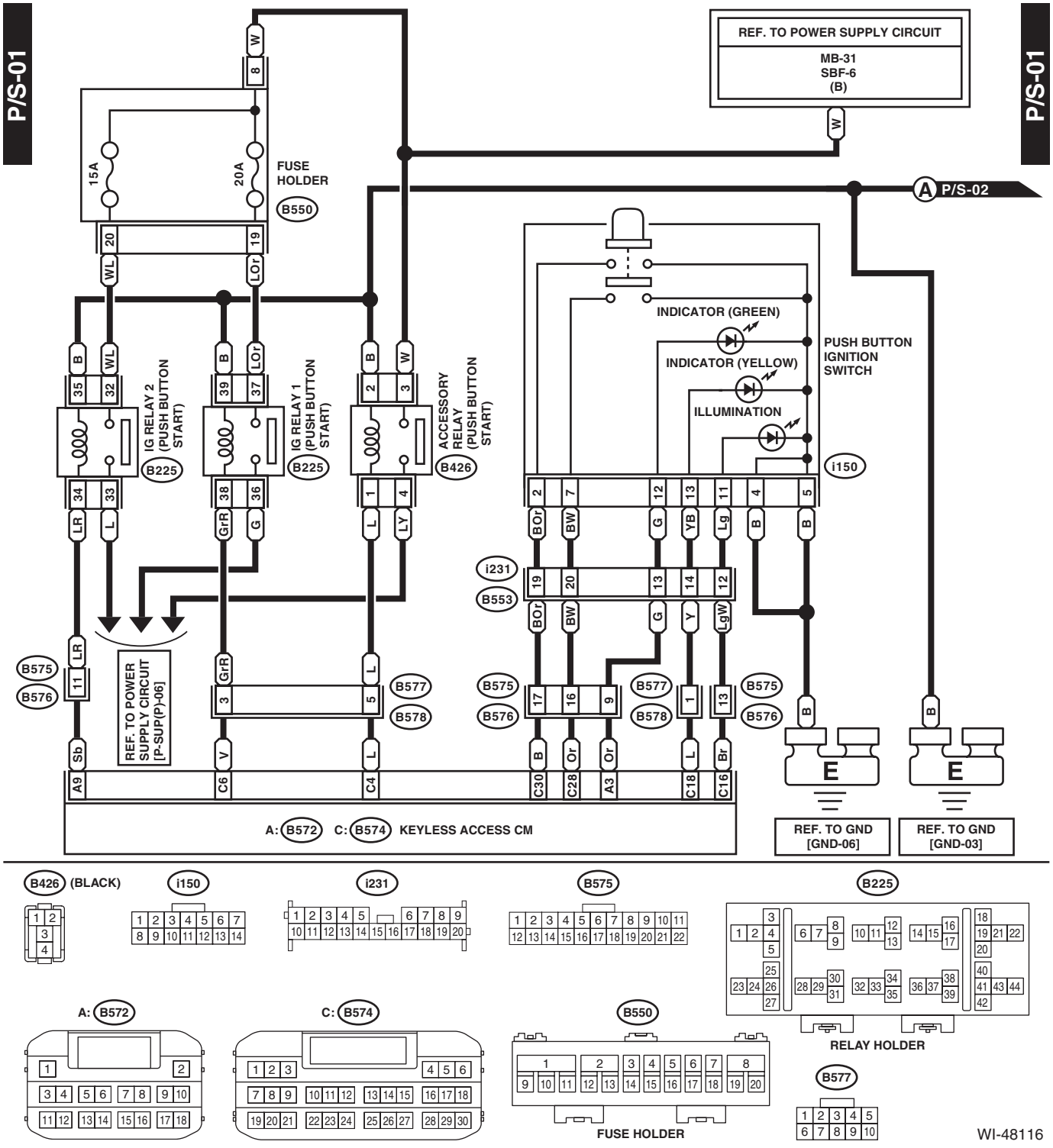

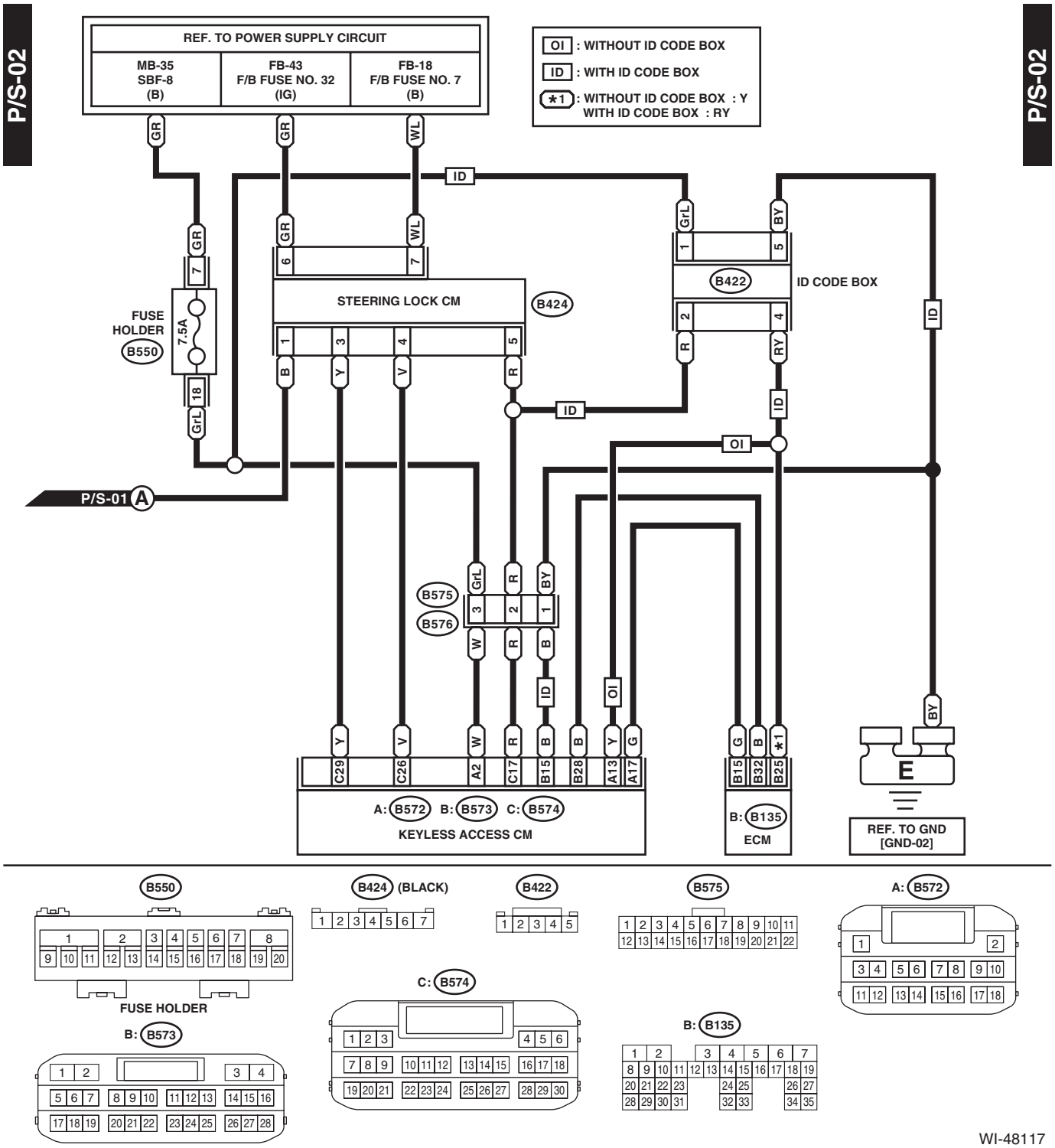
P/S-02
REF. TO POWER SUPPLY CIRCUIT
MB-35 SBF-8 (B)
FB-43 F/B FUSE NO. 32 (IG)
FB-18 F/B FUSE NO. 7 (B)
OI : WITHOUT ID CODE BOX
ID : WITH ID CODE BOX
*1 : WITHOUT ID CODE BOX : Y
WITH ID CODE BOX : RY
FUSE HOLDER
B550
7.5A
STEERING LOCK CM
B424
B422
ID CODE BOX
P/S-01 A
B575
B576
A: B572 B: B573 C: B574
KEYLESS ACCESS CM
B: B135
ECM
E
REF. TO GND [GND-02]
B550
FUSE HOLDER
B: B573
B424 (BLACK)
B422
C: B574
B575
B: B135
A: B572
WI-48117

P/S-03

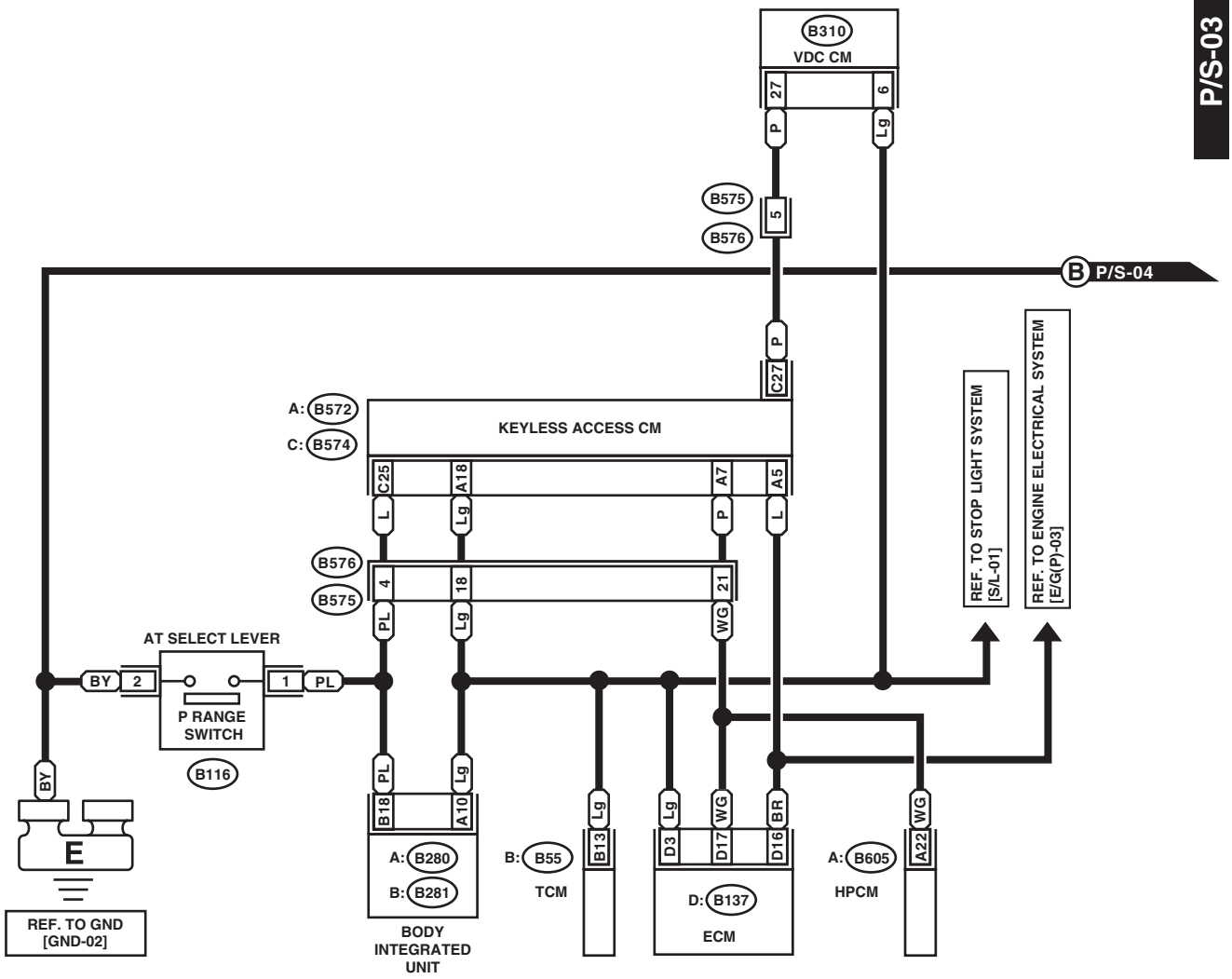

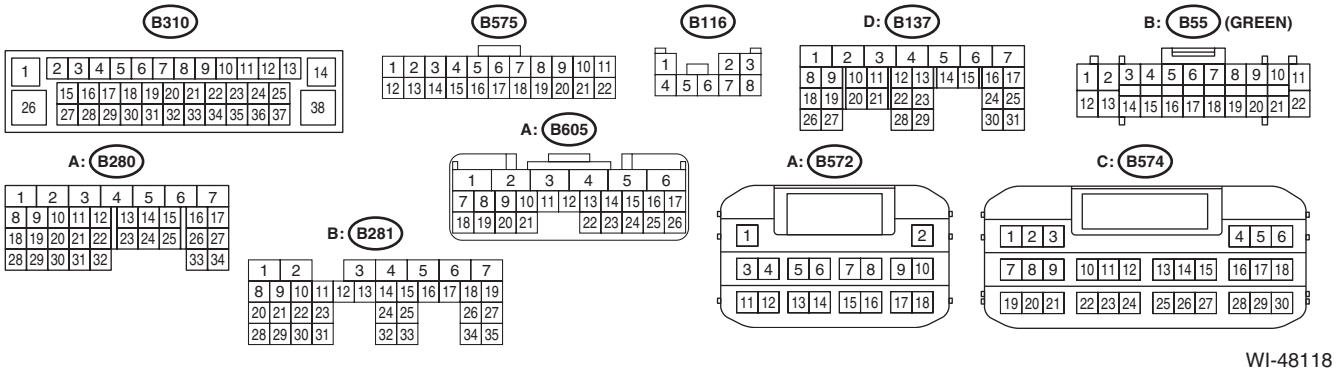

WI-48118

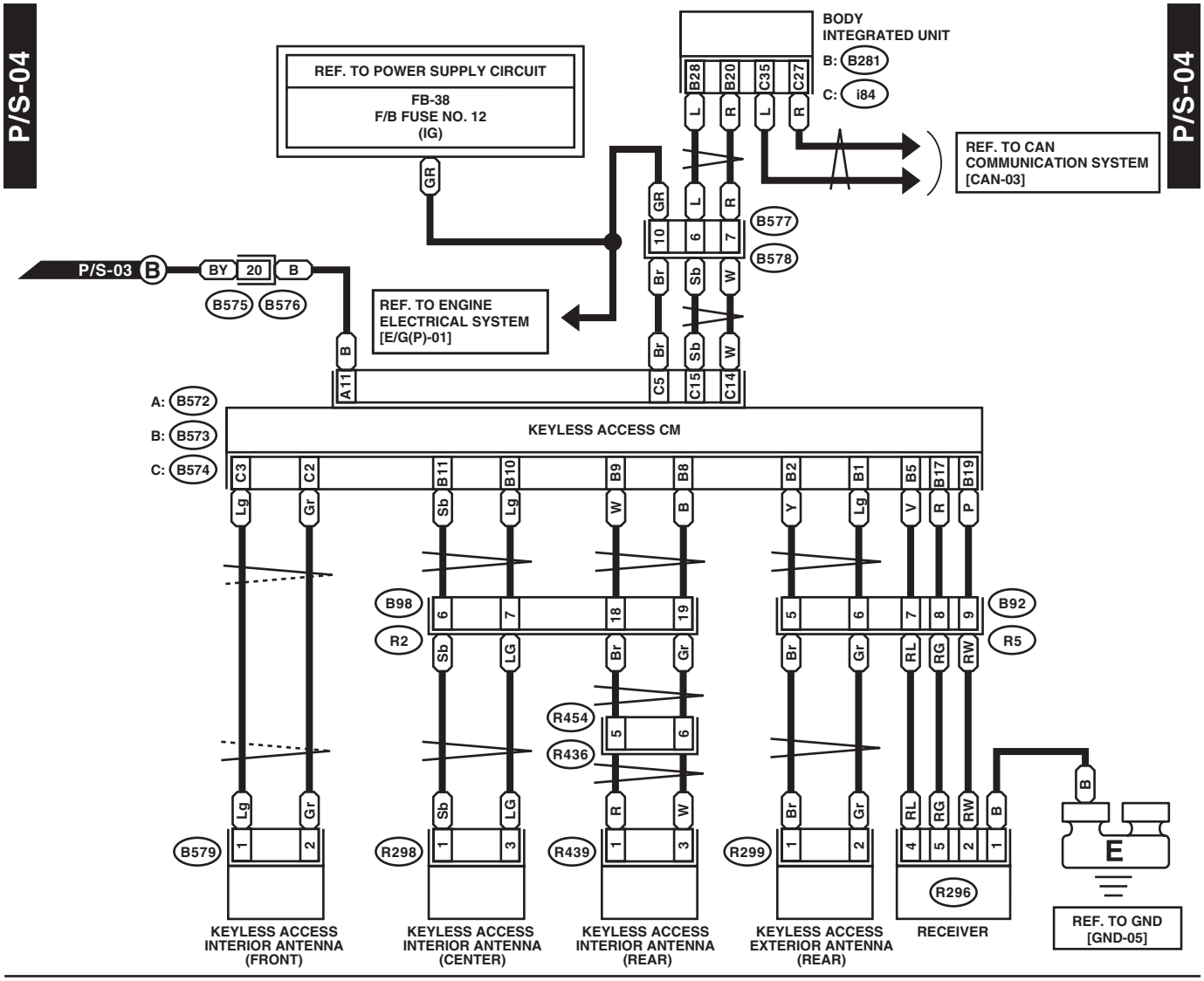
P/S-04
P/S-04
REF. TO POWER SUPPLY CIRCUIT
FB-38
F/B FUSE NO. 12
(IG)
BODY
INTEGRATED UNIT
B: B281
C: i84
REF. TO CAN
COMMUNICATION SYSTEM
[CAN-03]
P/S-03
REF. TO ENGINE
ELECTRICAL SYSTEM
[E/G(P)-01]
A: B572
B: B573
C: B574
KEYLESS ACCESS CM
B577
B578
B575
B576
B579
B98
R2
B92
R5
R454
R436
R298
R439
R299
R296
REF. TO GND
[GND-05]
KEYLESS ACCESS
INTERIOR ANTENNA
(FRONT)
KEYLESS ACCESS
INTERIOR ANTENNA
(CENTER)
KEYLESS ACCESS
INTERIOR ANTENNA
(REAR)
KEYLESS ACCESS
EXTERIOR ANTENNA
(REAR)
RECEIVER
B92
B98
B575
B577
B: B281
B579
R296
R298
R439
R299
R454
A: B572
B: B573
C: B574
C: i84 (BLACK)

WI-48119

38.Radiator Fan System

A: WIRING DIAGRAM

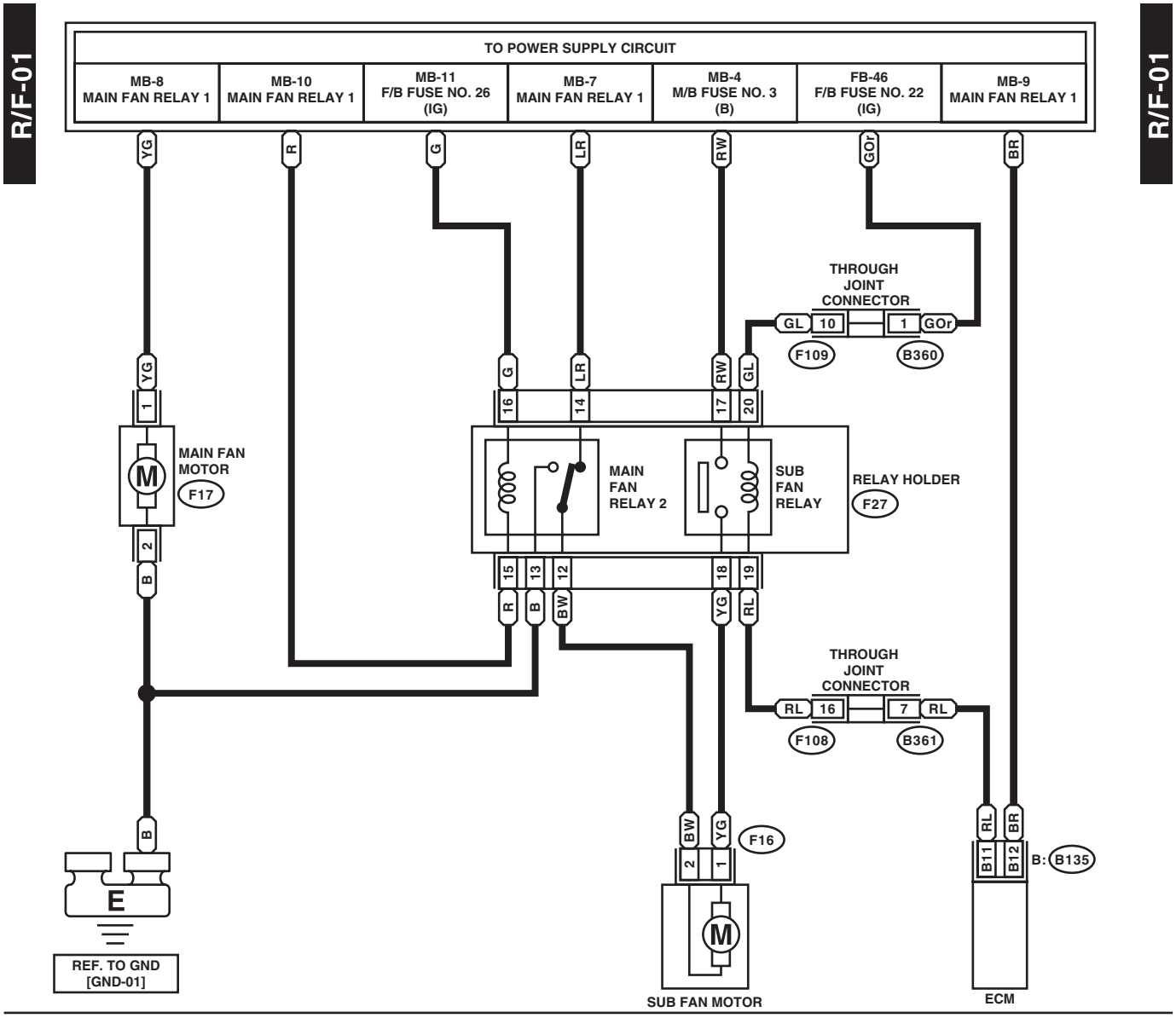

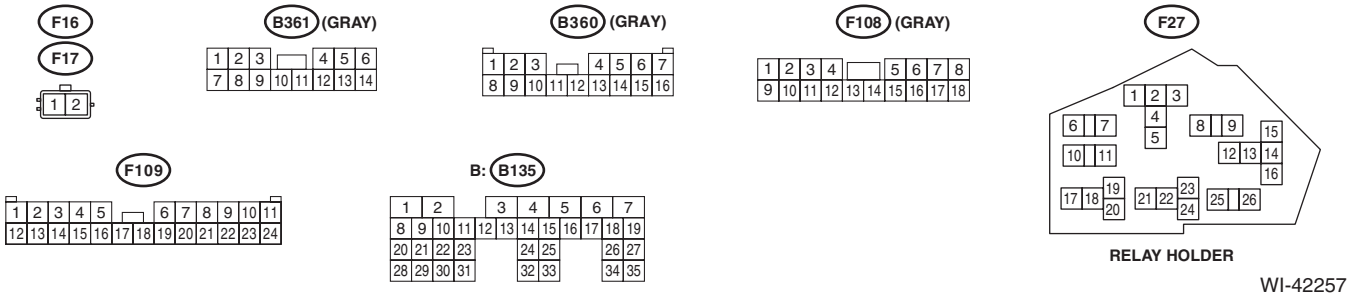

WI-42257

39.Rear Accessory Power Supply Socket System

A: WIRING DIAGRAM

RAPS-01

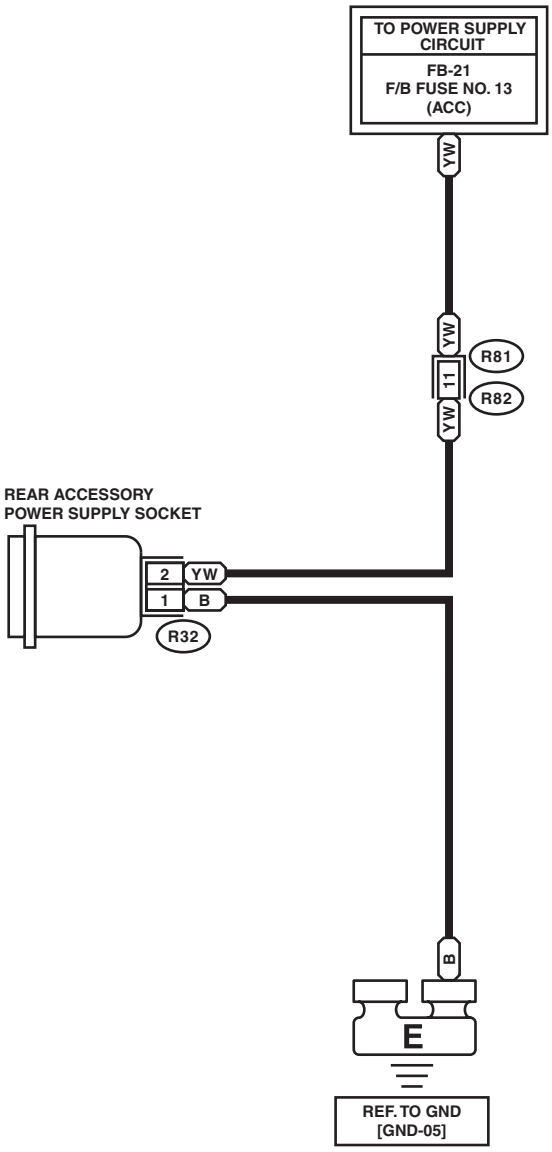

RAPS-01

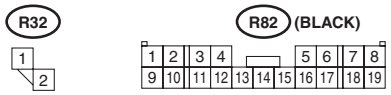

WI-34237

40.Rear Defogger System

A: WIRING DIAGRAM

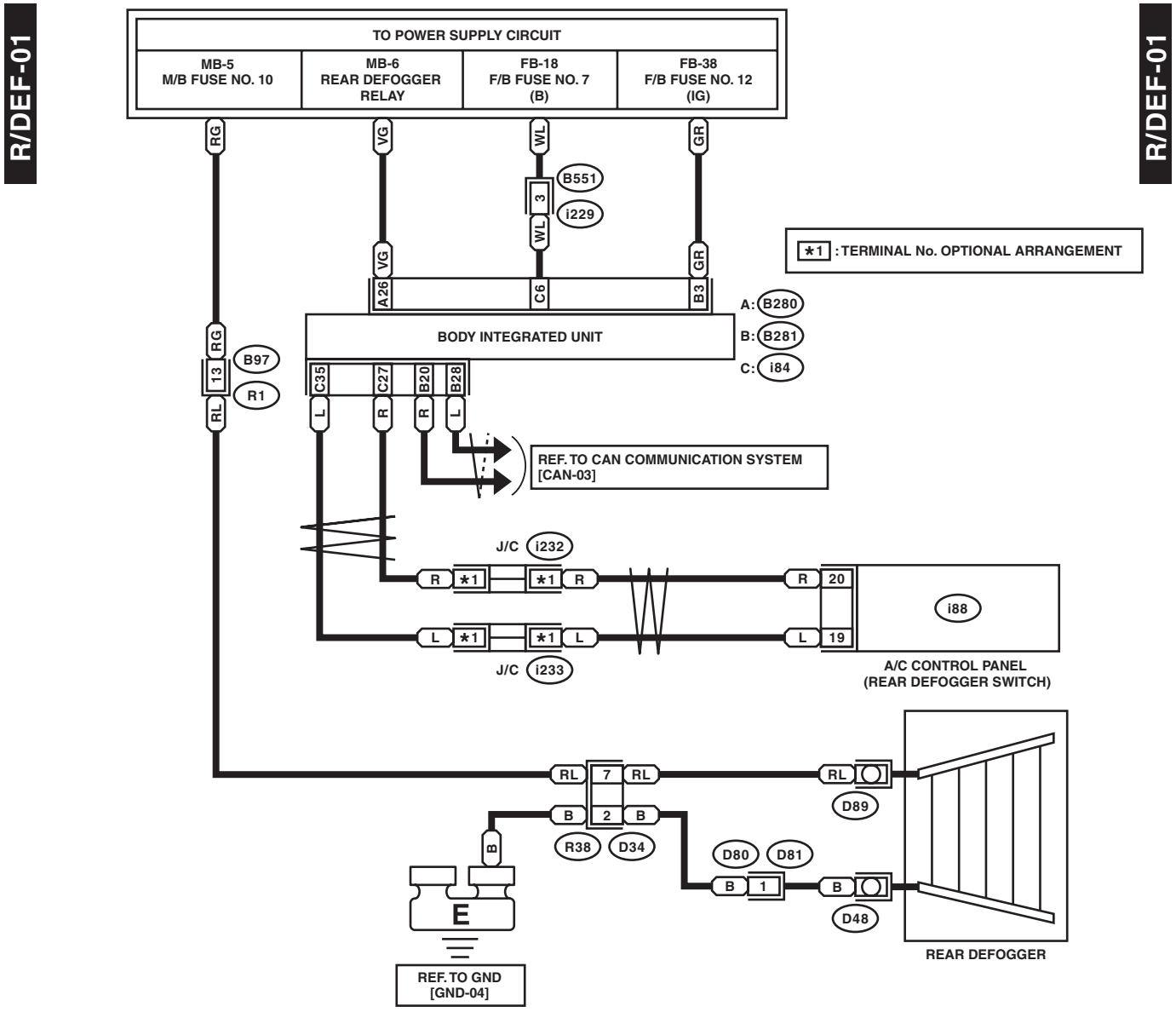

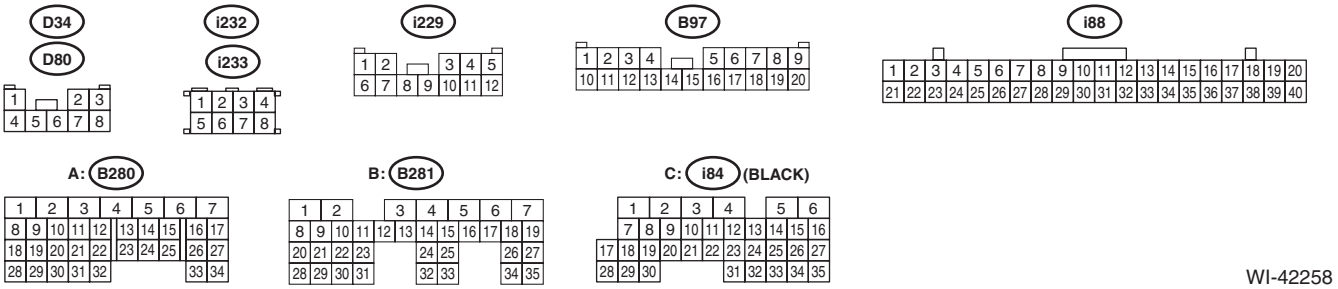

WI-42258

41.Rearview Camera System

A: WIRING DIAGRAM

1. MODELS WITHOUT NAVIGATION SYSTEM

RVCAM(ON)-01

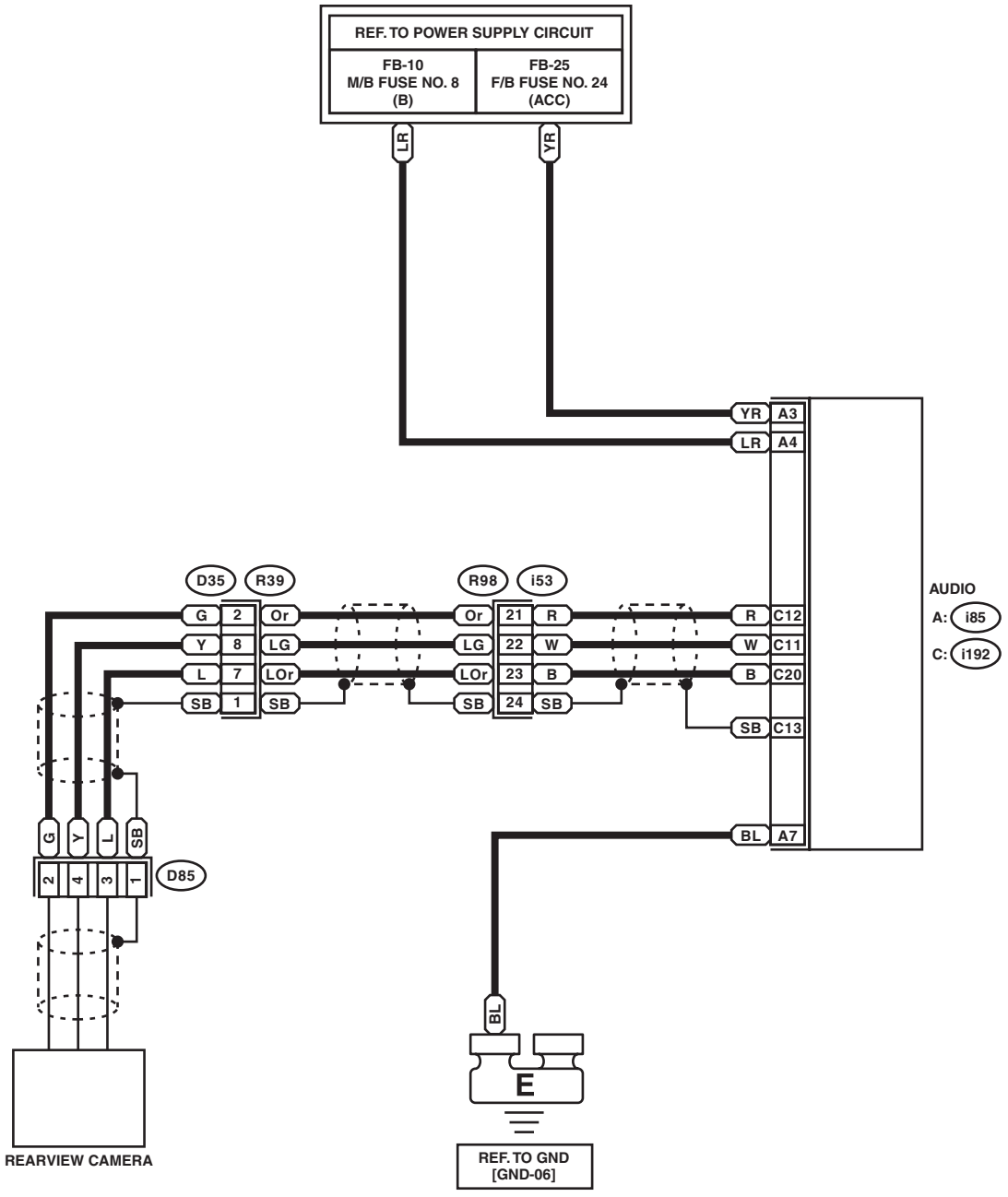

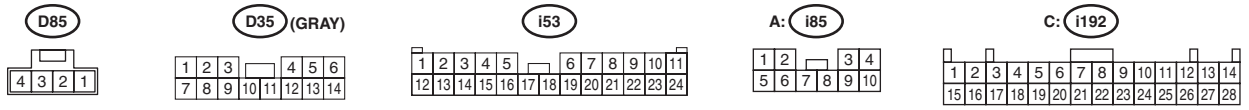

WI-48120

2. MODELS WITH NAVIGATION SYSTEM

RVCAM(WN)-01

RVCAM(WN)-01

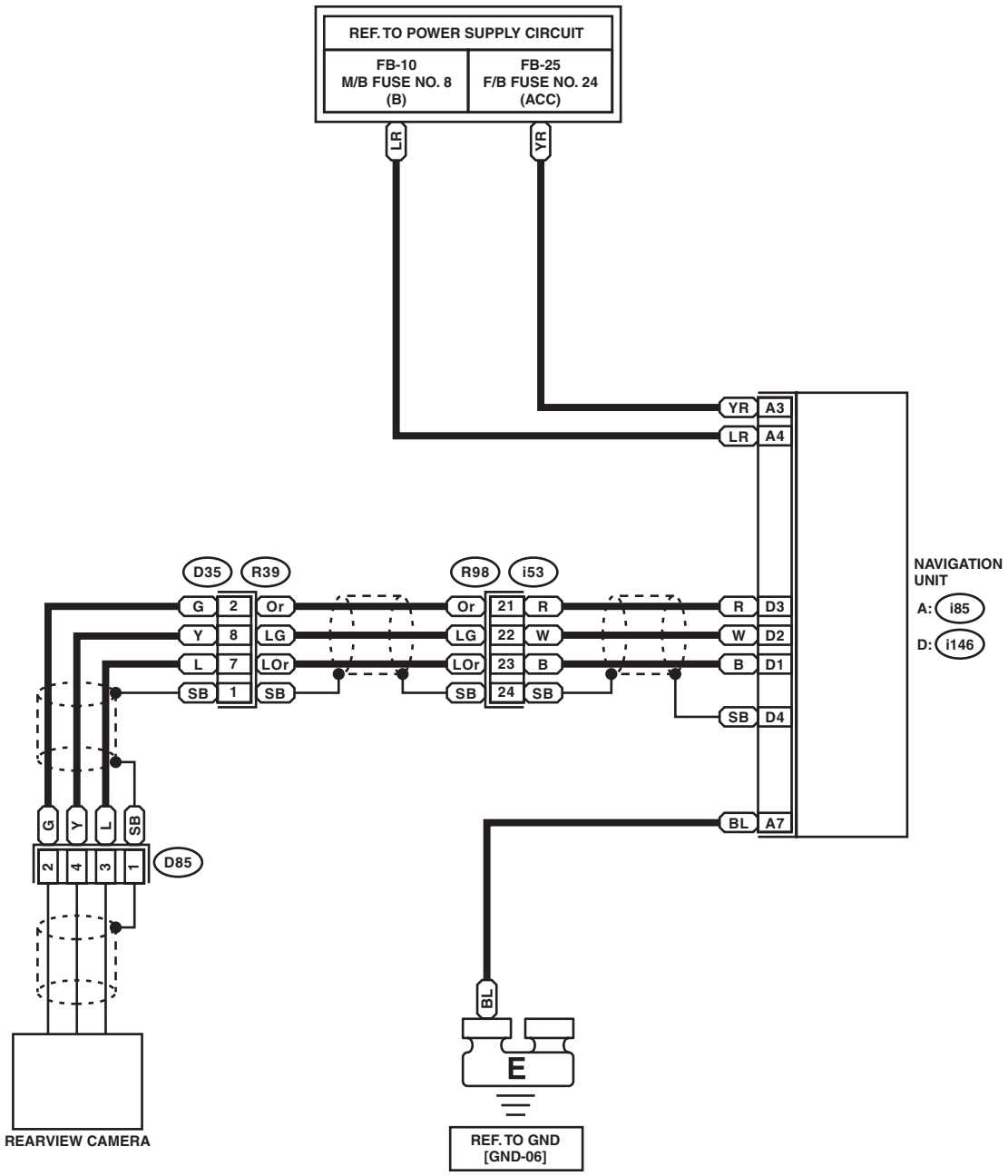

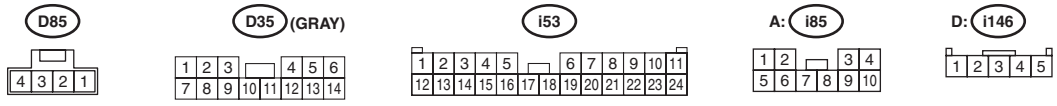

WI-48121

42.Rearview Mirror System

A: WIRING DIAGRAM

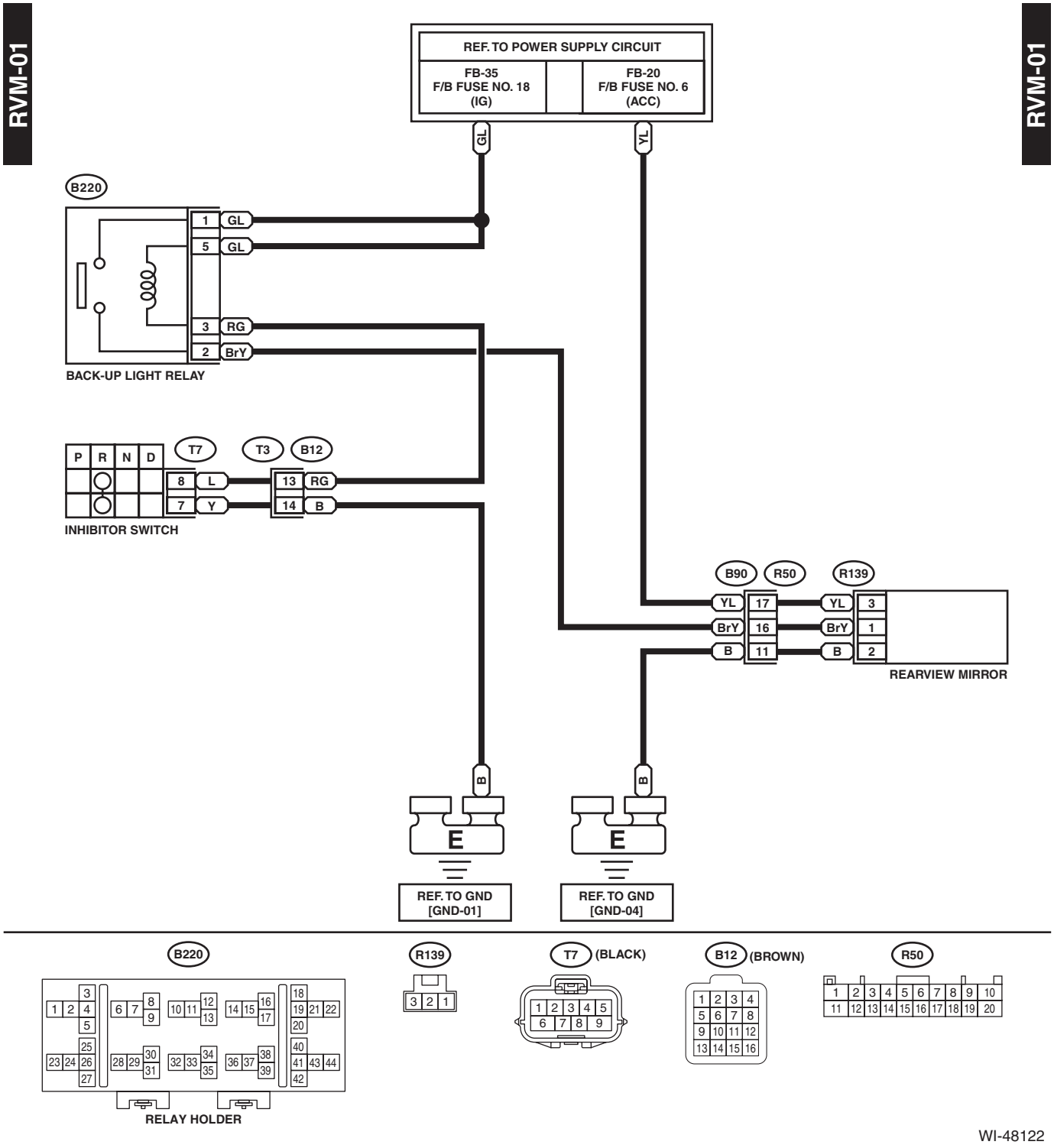

WI-48122

43.Rear Wiper and Washer System

A: WIRING DIAGRAM

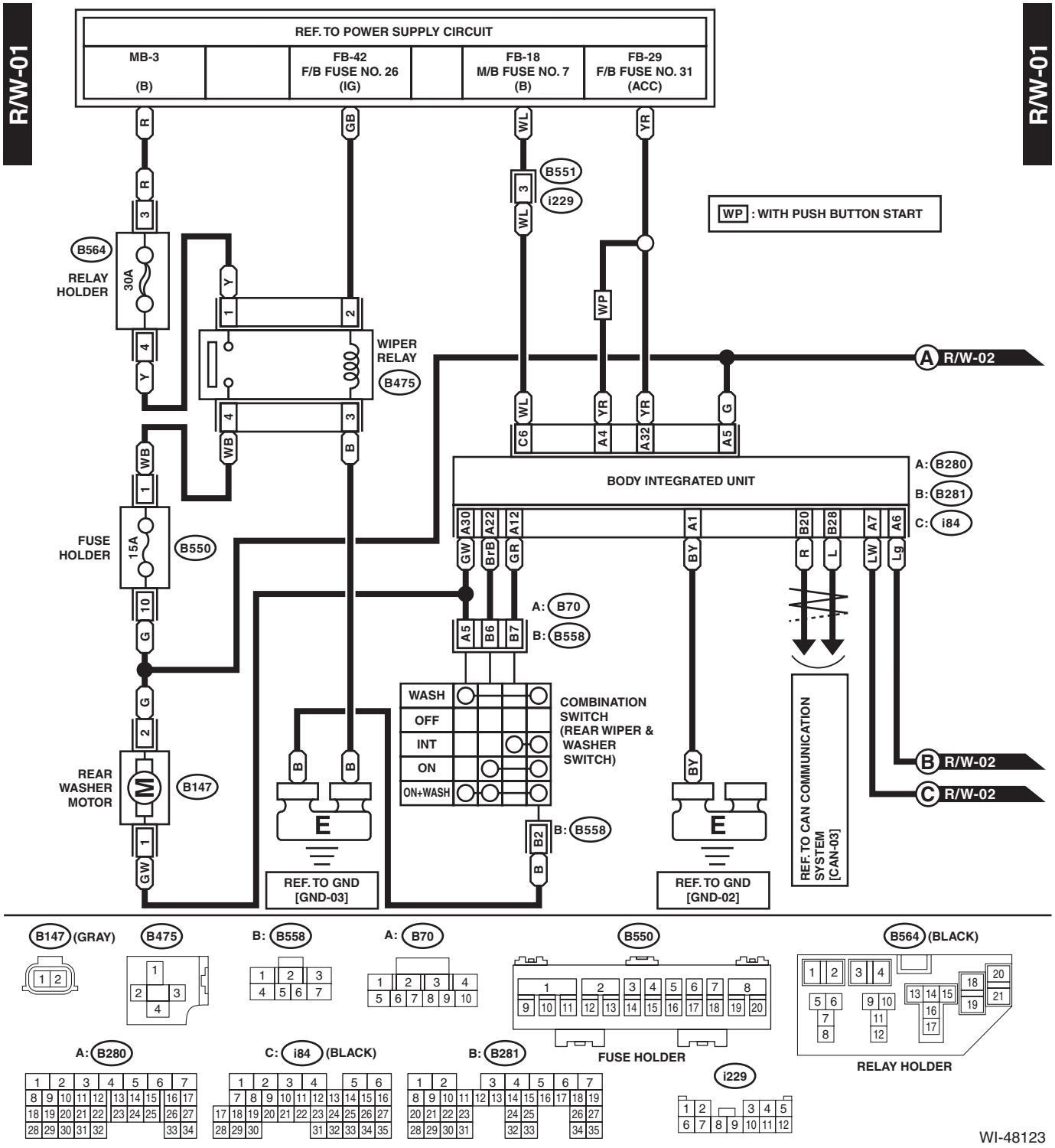

WI-48123

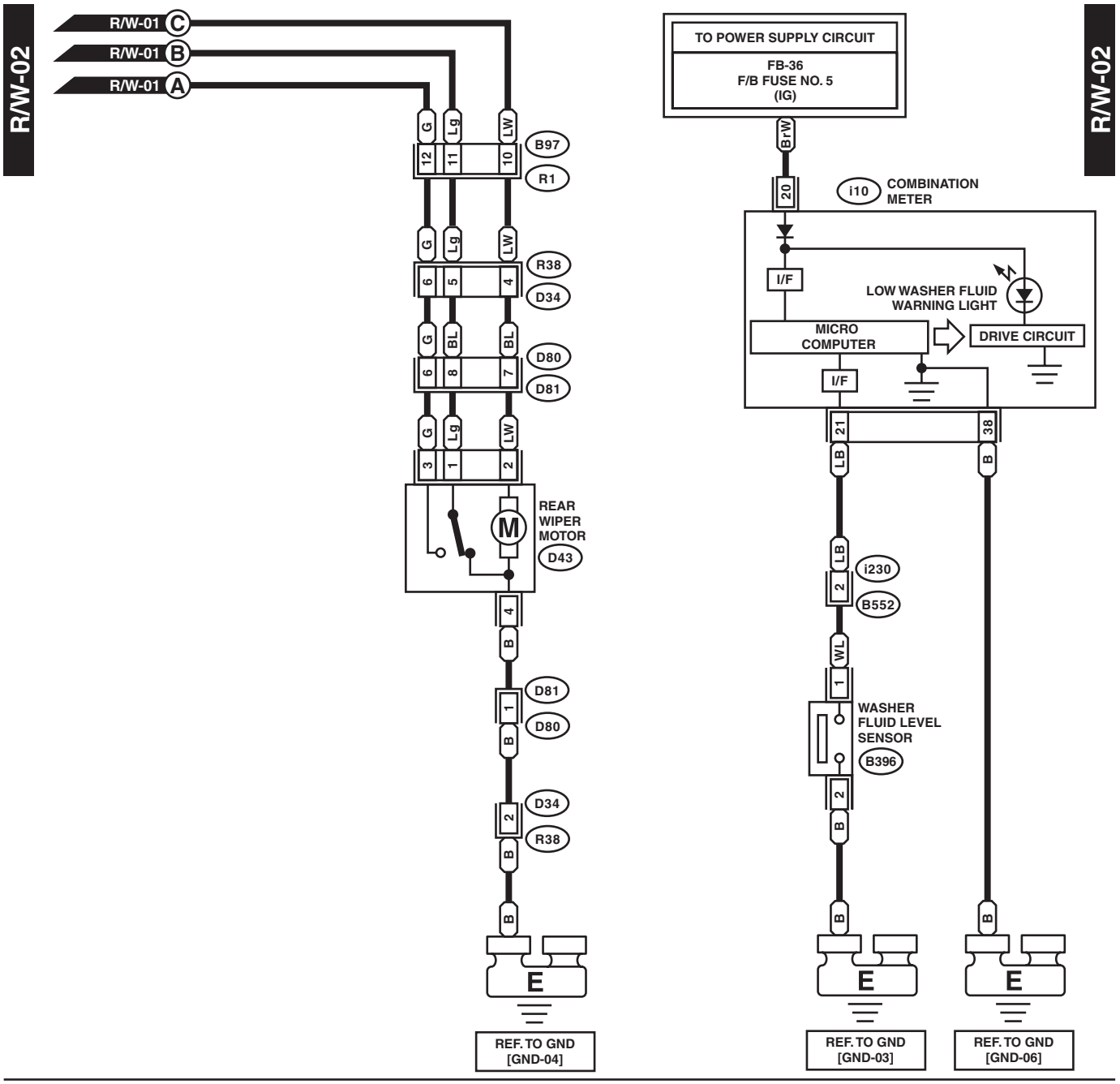
R/W-02
R/W-01 C
R/W-01 B
R/W-01 A
G
Lg
LW
12
11
10
B97
R1
R38
D34
BL
D80
D81
3
1
2
REAR WIPER MOTOR
M
D43
4
B
E
REF. TO GND [GND-04]
TO POWER SUPPLY CIRCUIT
FB-36
F/B FUSE NO. 5
(IG)
BrW
20
i10
COMBINATION METER
I/F
LOW WASHER FLUID WARNING LIGHT
MICRO COMPUTER
DRIVE CIRCUIT
21
38
LB
i230
B552
WL
WASHER FLUID LEVEL SENSOR
B396
REF. TO GND [GND-03]
REF. TO GND [GND-06]

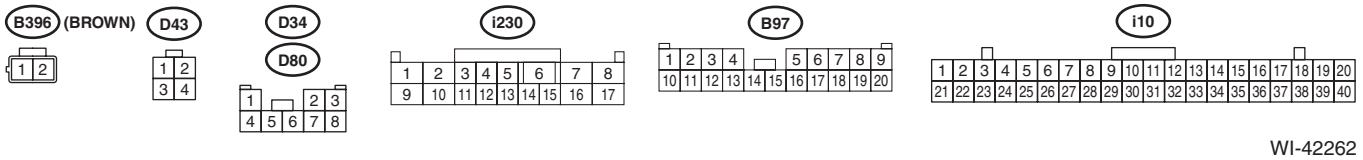
B396 (BROWN)
D43
D34
D80
i230
B97
i10

WI-42262

44.Remote Control Mirror System

A: WIRING DIAGRAM

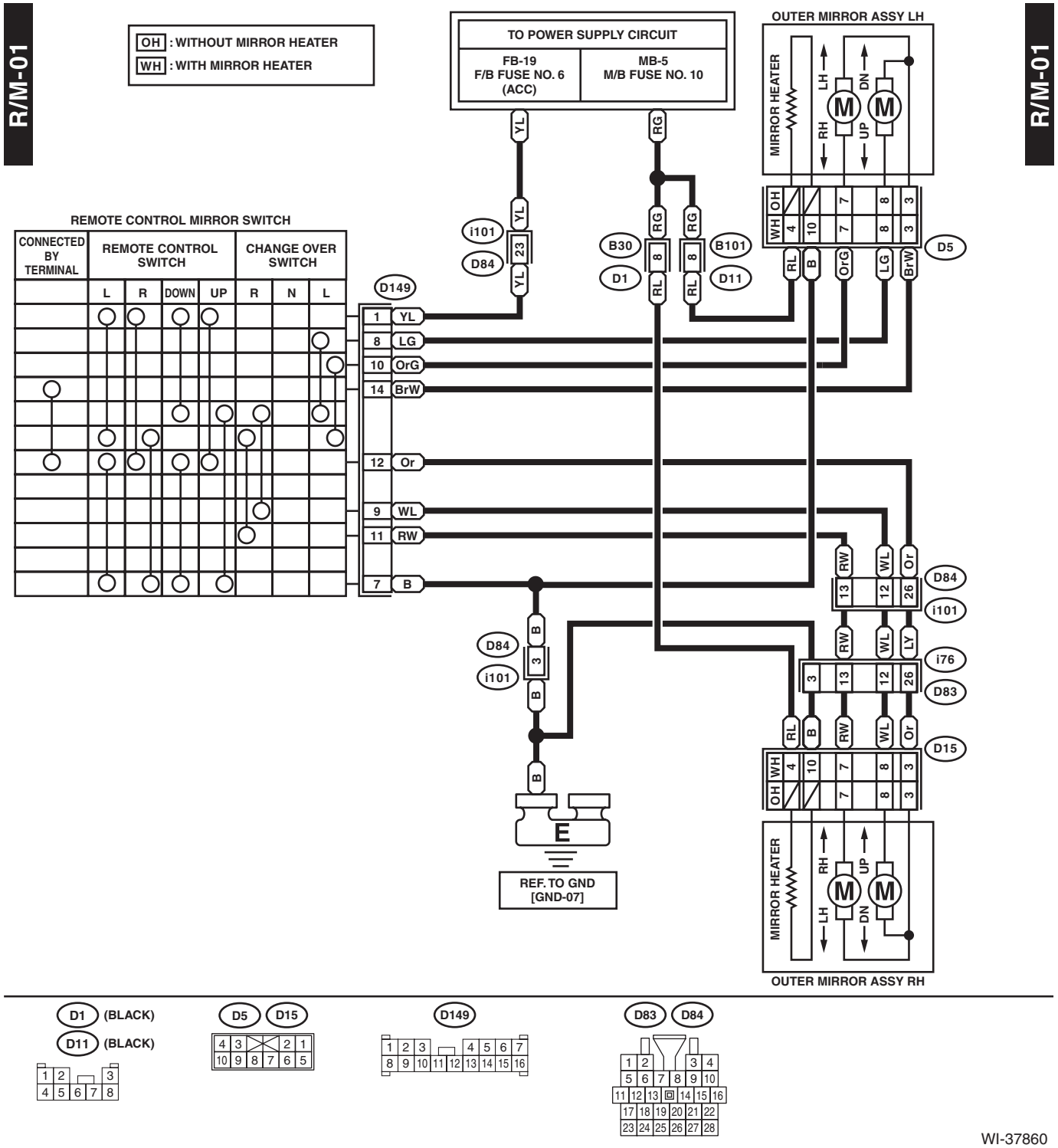

WI-37860

45.Remote Engine Start System

A: WIRING DIAGRAM

1. WITHOUT PUSH BUTTON START

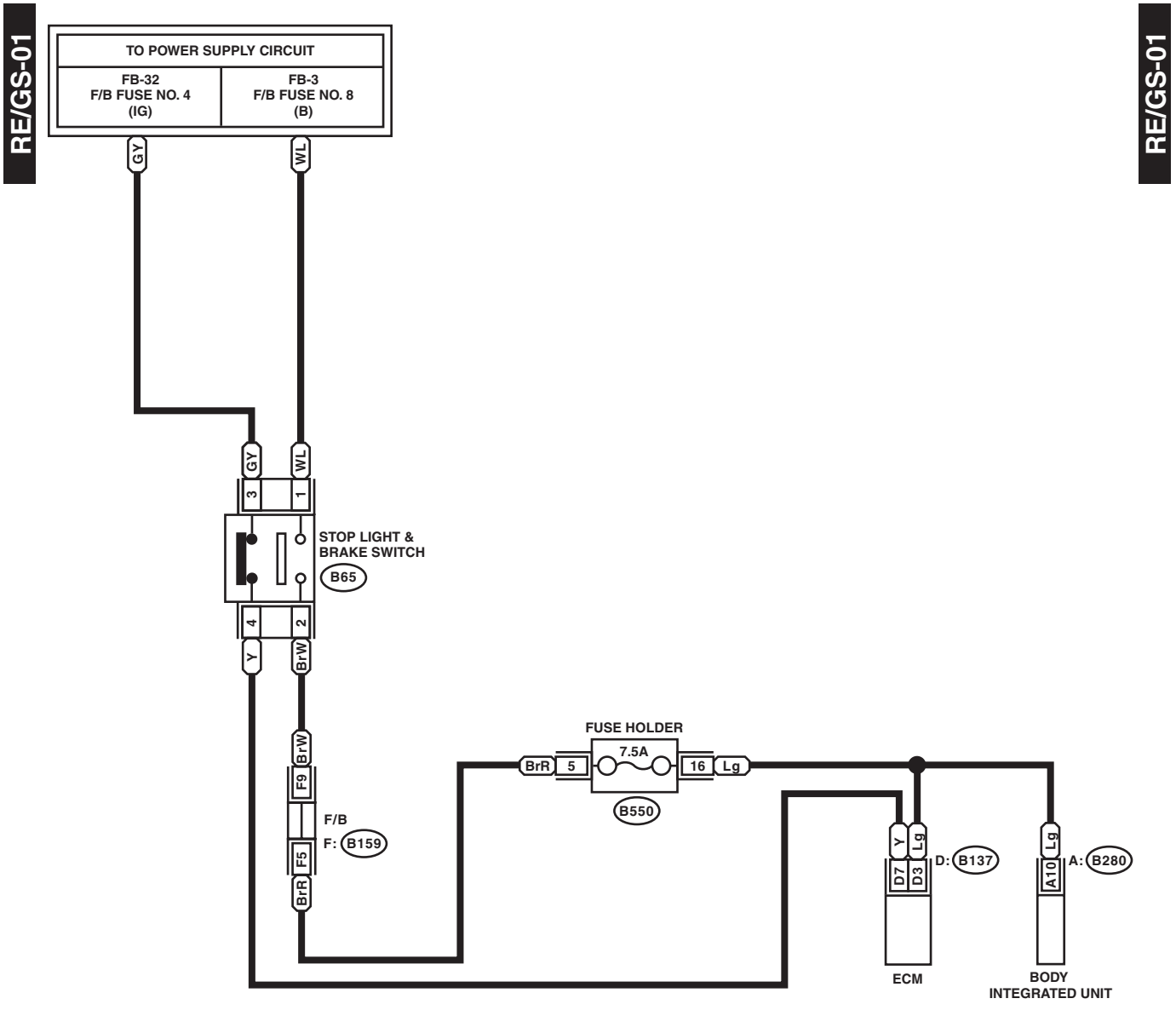

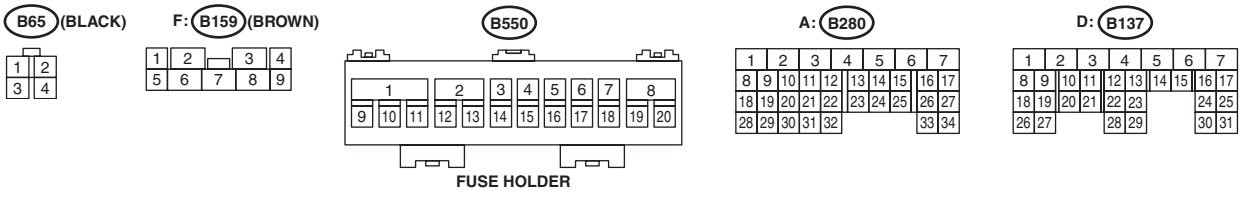

WI-42263

RE/GS-02

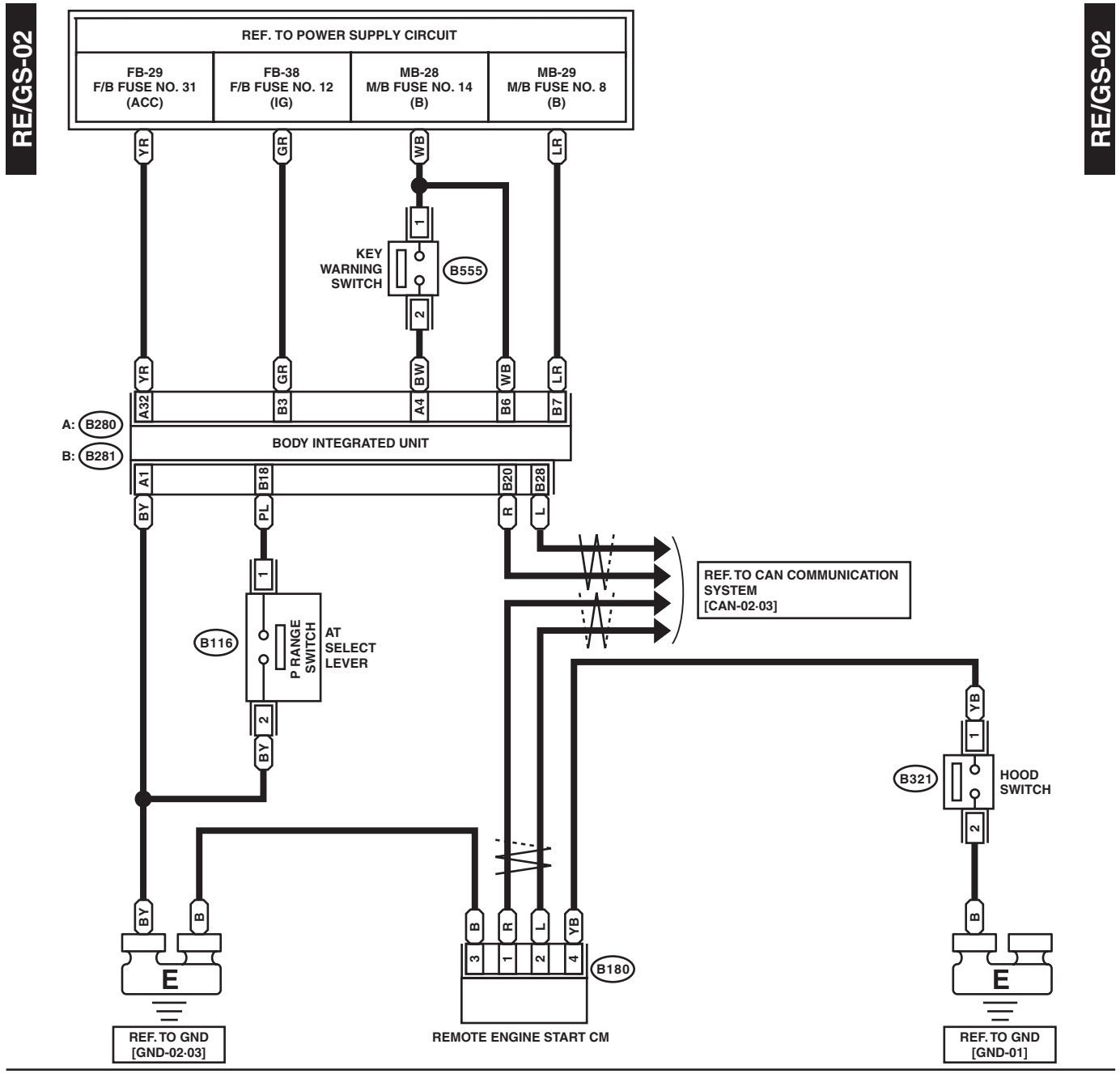

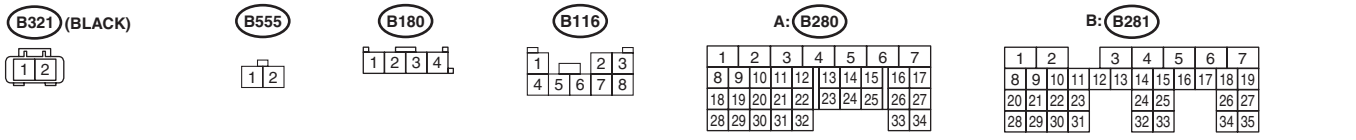

WI-48124

RE/GS-02

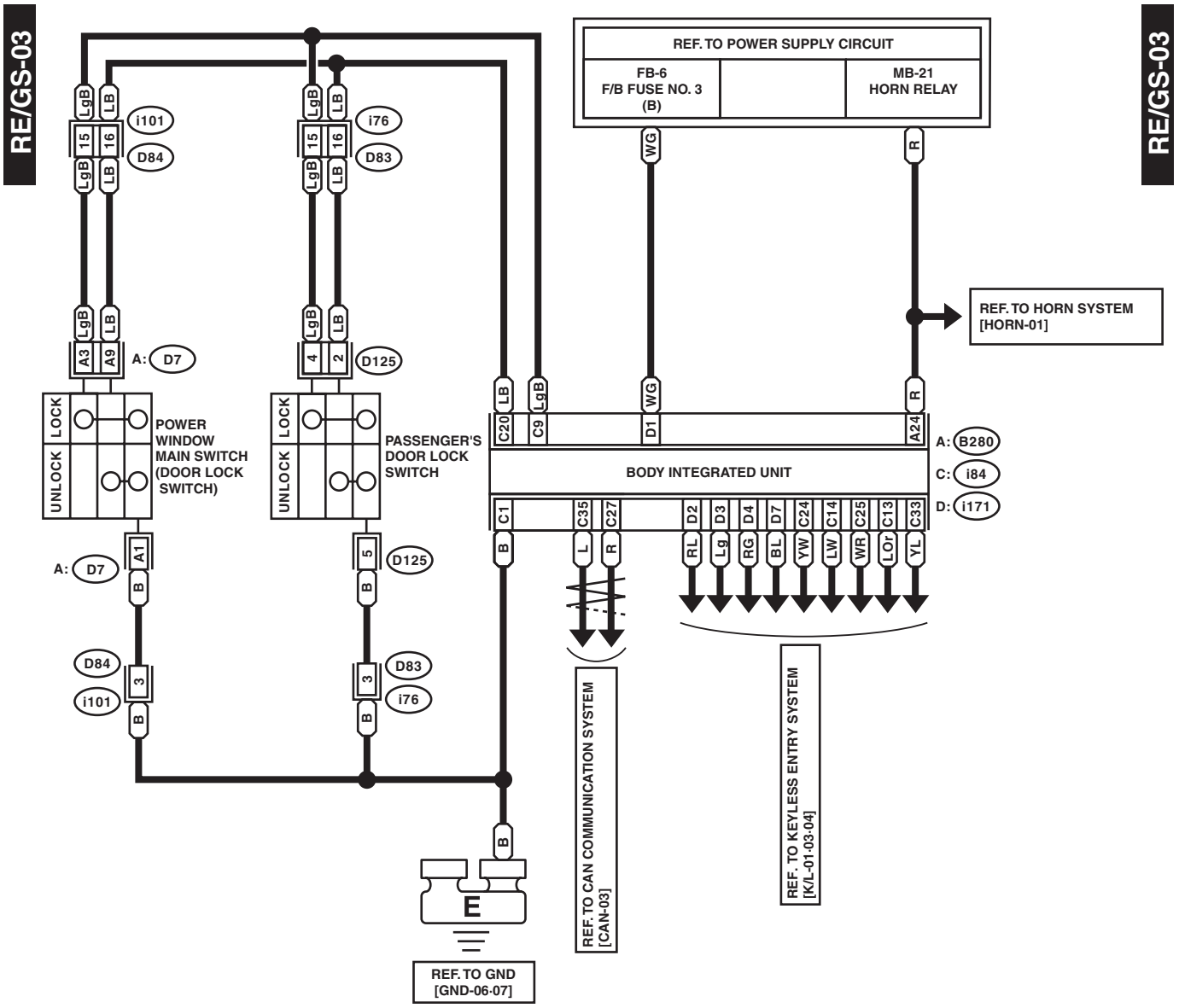
RE/GS-03
RE/GS-03
REF. TO POWER SUPPLY CIRCUIT
FB-6
F/B FUSE NO. 3
(B)
MB-21
HORN RELAY
REF. TO HORN SYSTEM
[HORN-01]
i101
D84
i76
D83
A: D7
D125
POWER
WINDOW
MAIN SWITCH
(DOOR LOCK
SWITCH)
PASSENGER'S
DOOR LOCK
SWITCH
LOCK
UNLOCK
BODY INTEGRATED UNIT
A: B280
C: i84
D: i171
REF. TO CAN COMMUNICATION SYSTEM
[CAN-03]
REF. TO KEYLESS ENTRY SYSTEM
[K/L-01-03-04]
E
REF. TO GND
[GND-06-07]

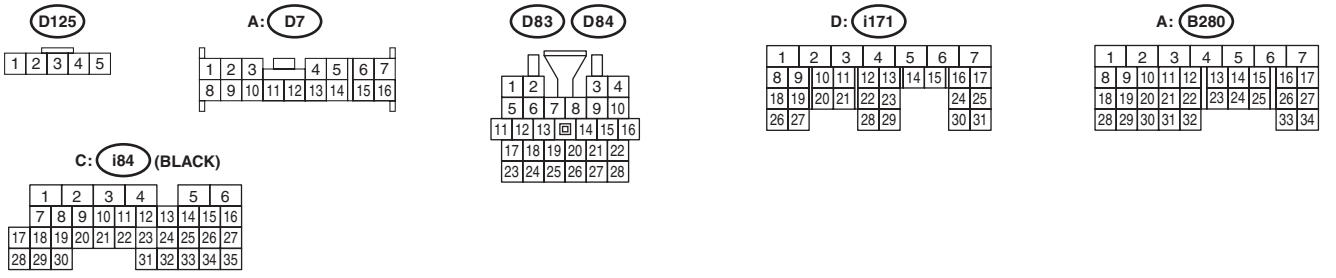
D125
A: D7
D83
D84
D: i171
A: B280
C: i84 (BLACK)

WI-48125

2. WITH PUSH BUTTON START

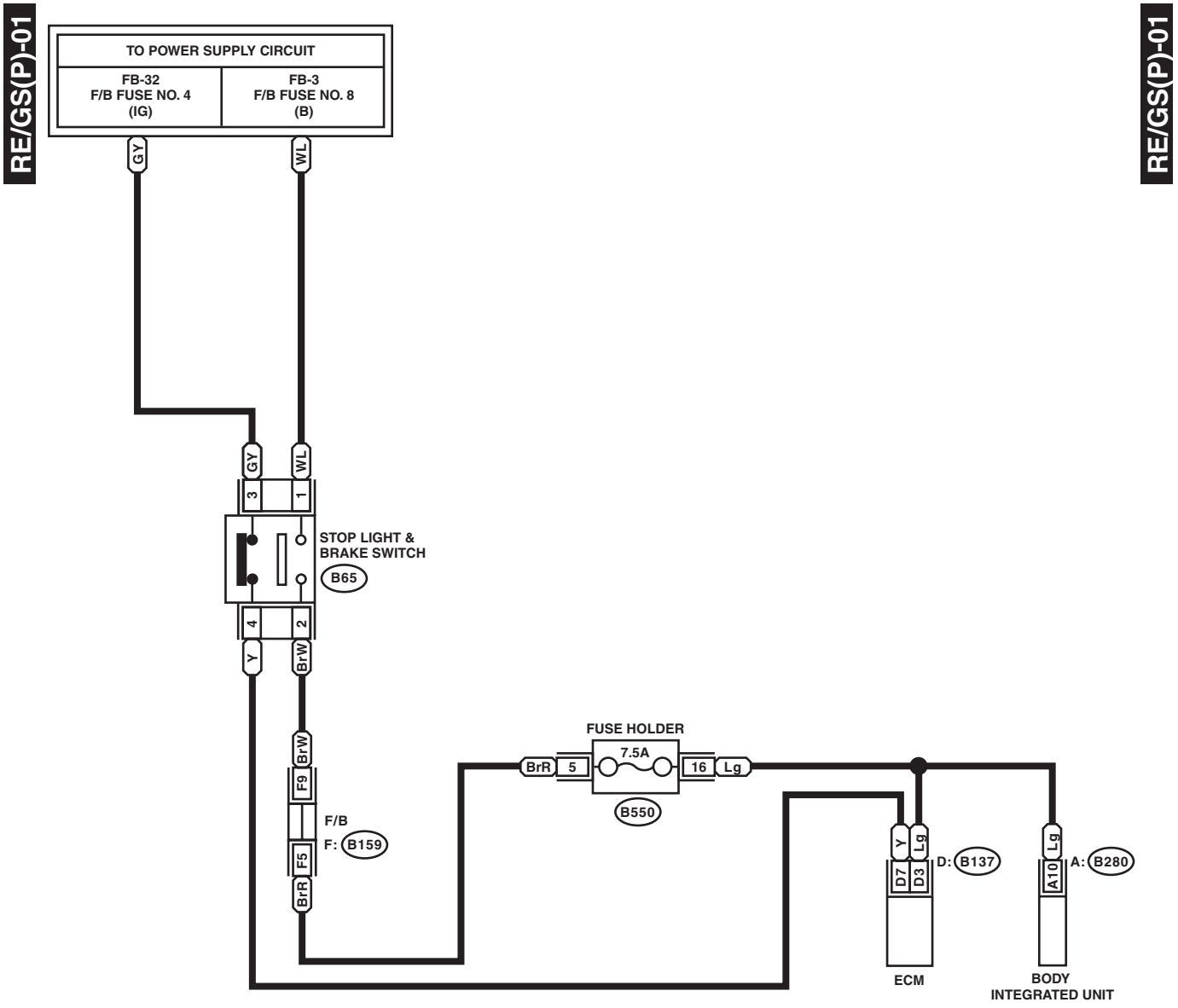

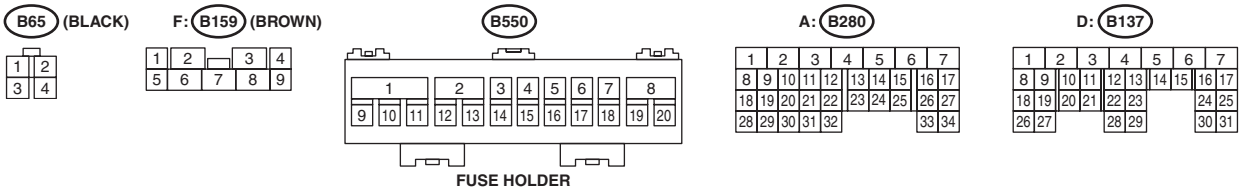

WI-42266

WIRING SYSTEM

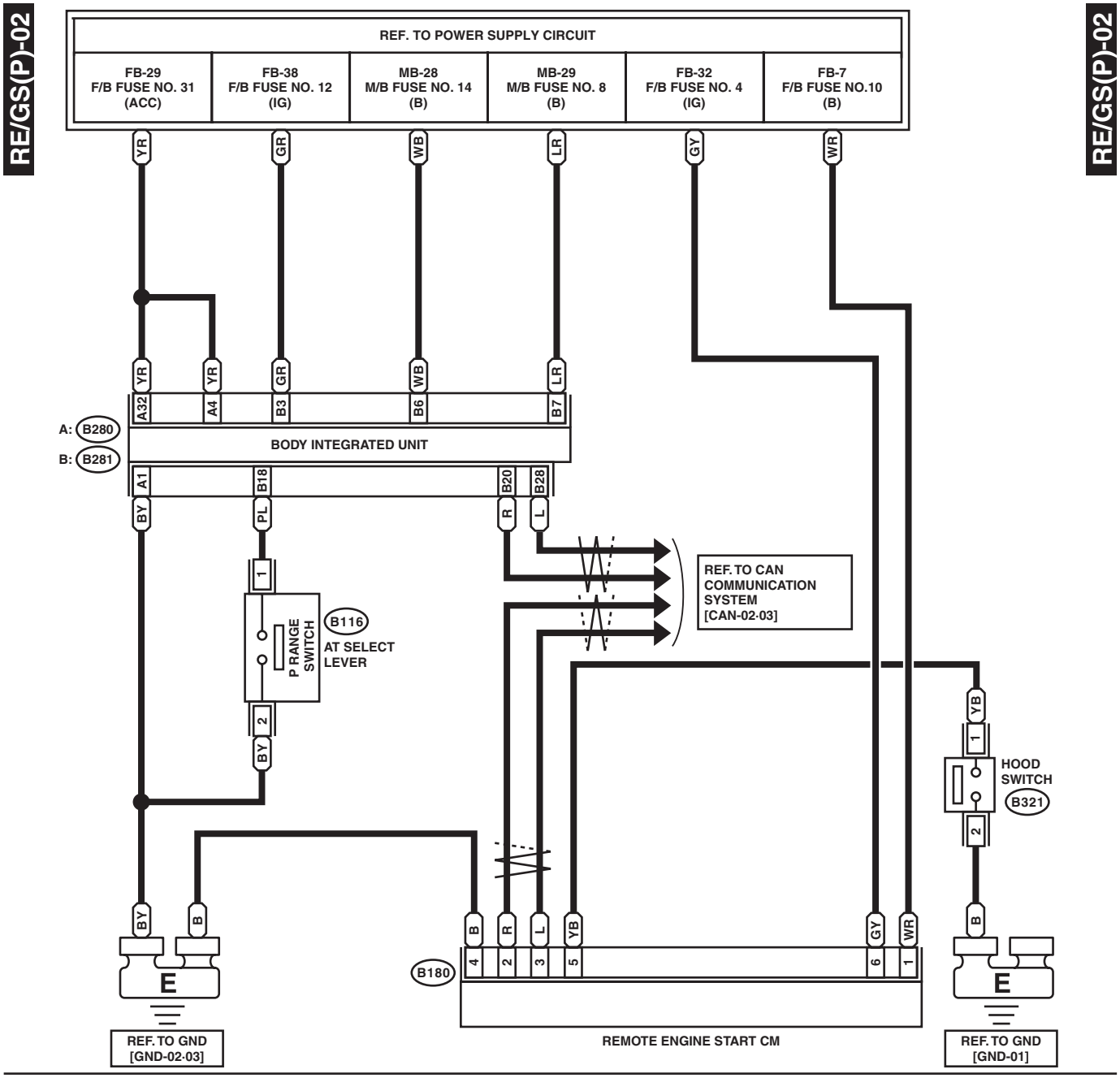

WI-48149

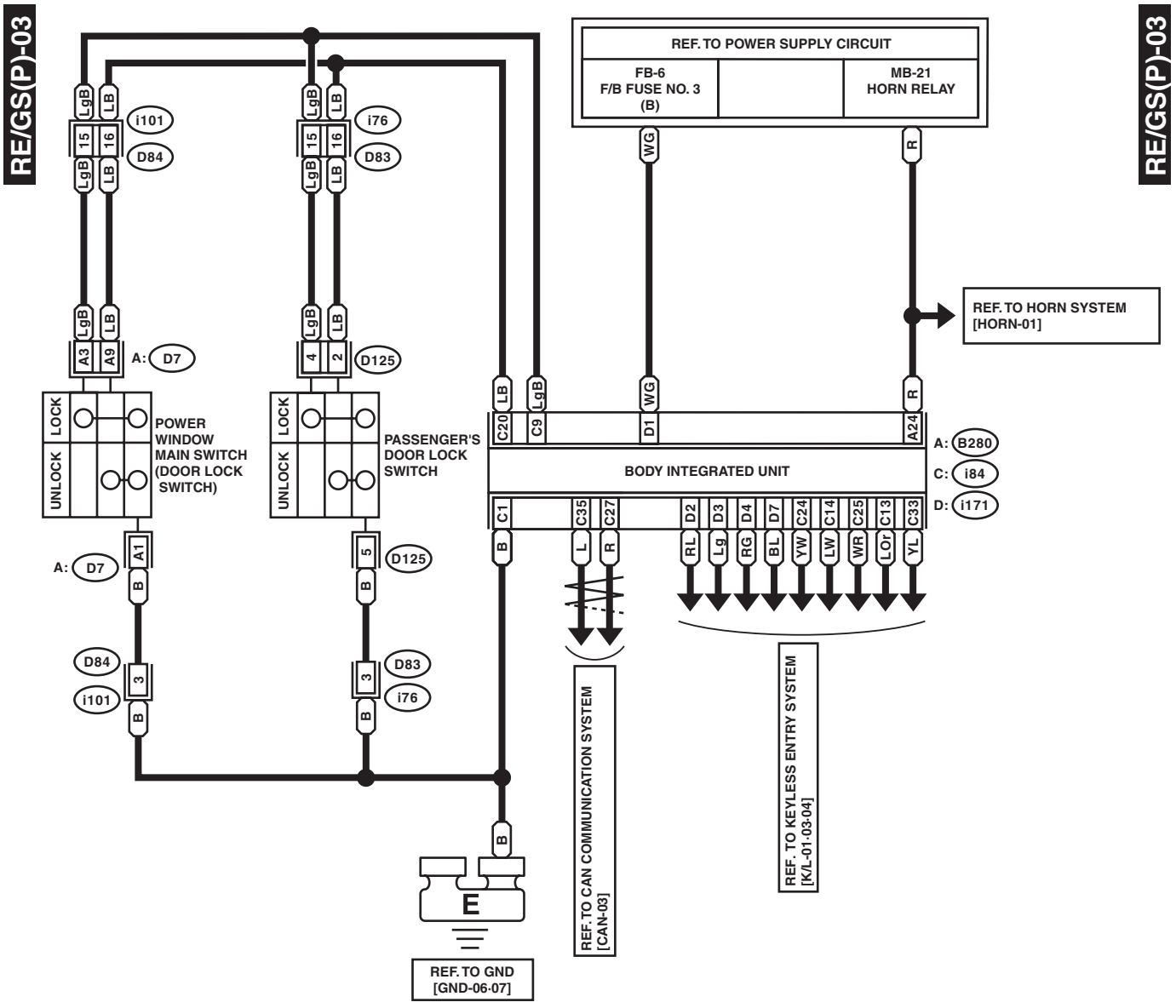
RE/GS(P)-03
RE/GS(P)-03
REF. TO POWER SUPPLY CIRCUIT
FB-6
F/B FUSE NO. 3
(B)
MB-21
HORN RELAY
REF. TO HORN SYSTEM
[HORN-01]
i101
D84
i76
D83
A: D7
D125
POWER
WINDOW
MAIN SWITCH
(DOOR LOCK
SWITCH)
PASSENGER'S
DOOR LOCK
SWITCH
LOCK
UNLOCK
BODY INTEGRATED UNIT
A: B280
C: i84
D: i171
REF. TO CAN COMMUNICATION SYSTEM
[CAN-03]
REF. TO KEYLESS ENTRY SYSTEM
[K/L-01-03-04]
E
REF. TO GND
[GND-06-07]

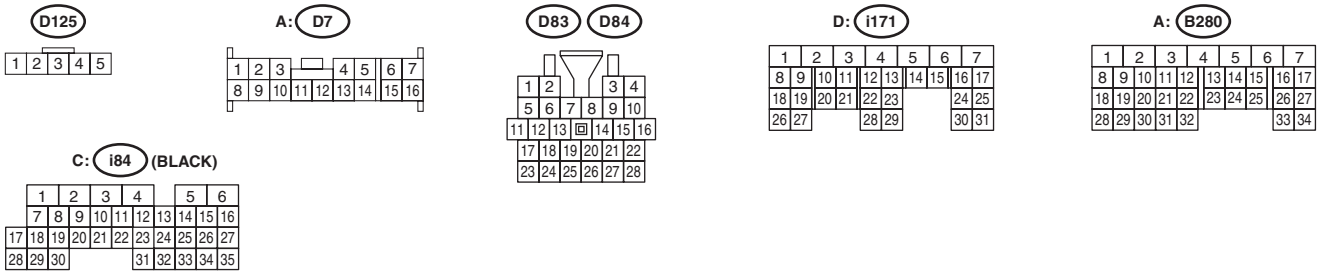
D125
A: D7
D83
D84
D: i171
A: B280
C: i84 (BLACK)

WI-48126

WIRING SYSTEM

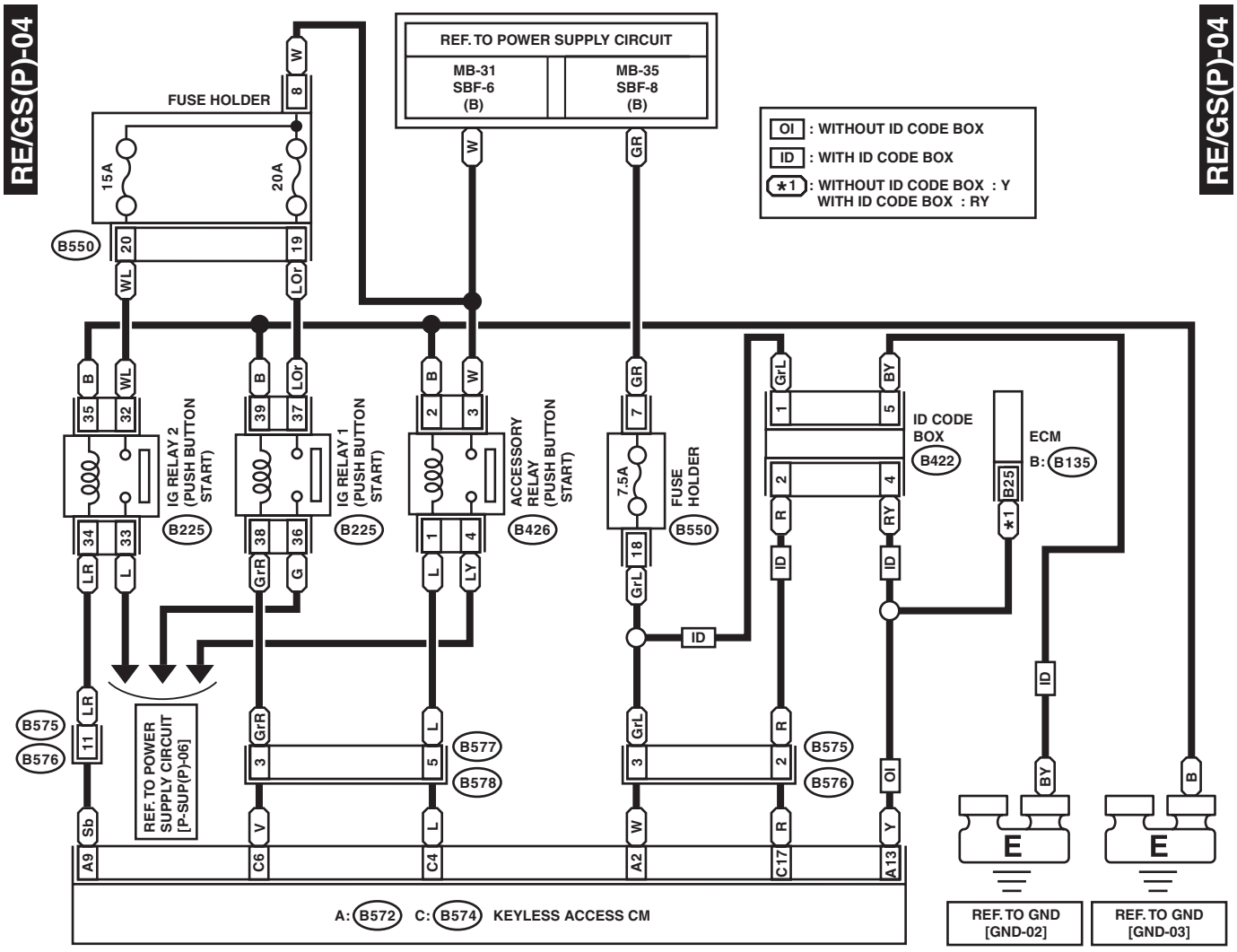

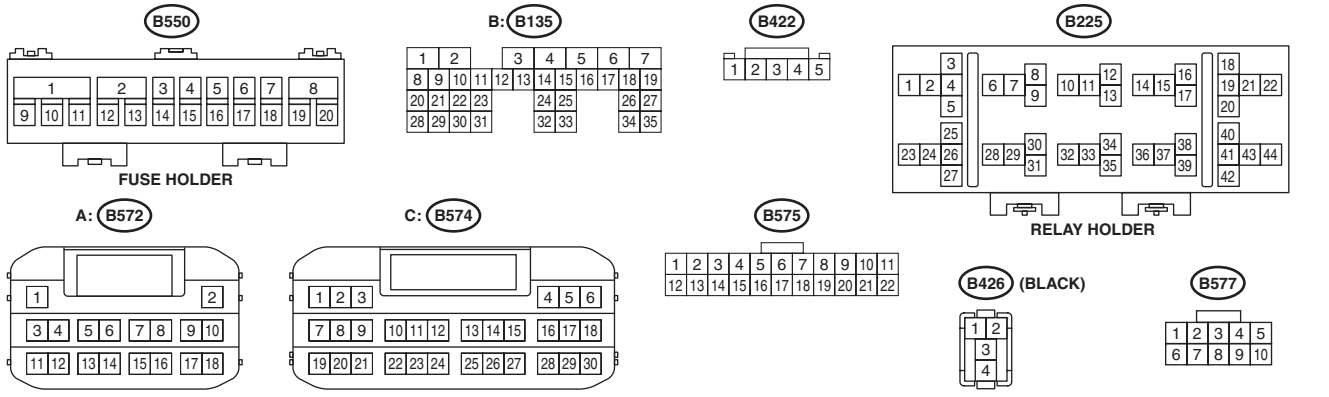

WI-48127

46.Seat Belt Warning System

A: WIRING DIAGRAM

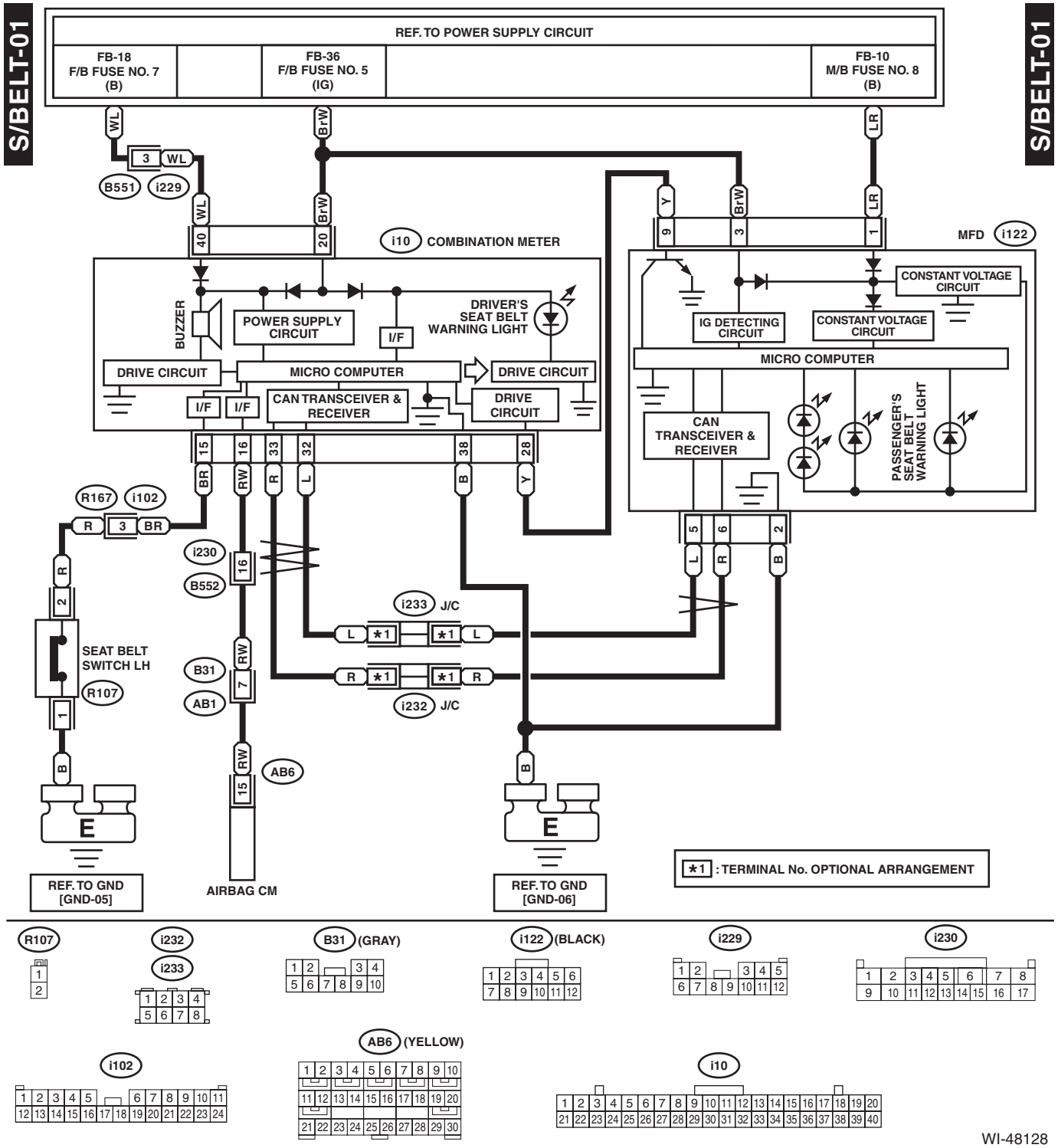

WI-48128

47.Seat Heater System

A: WIRING DIAGRAM

S/H-01

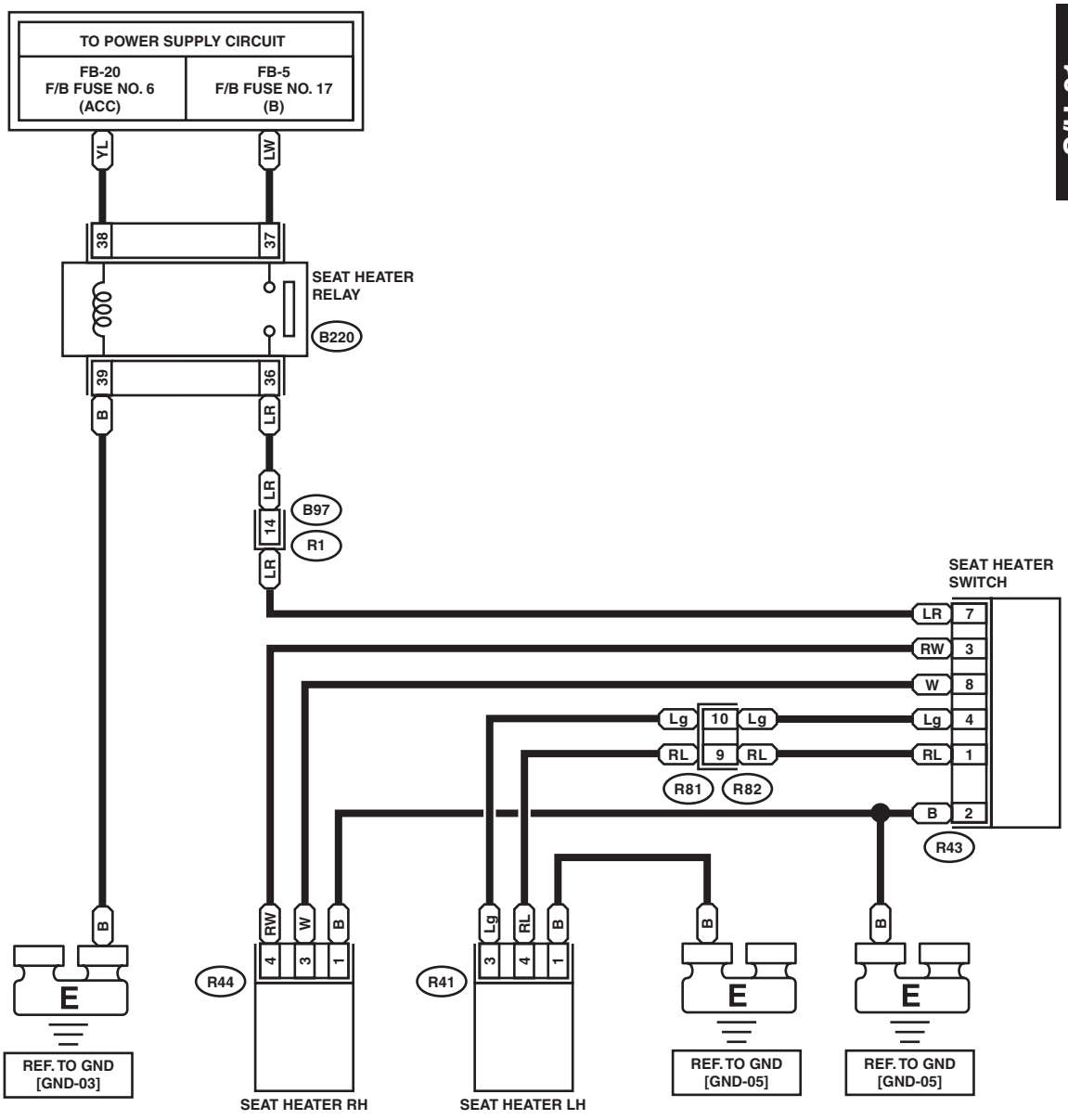

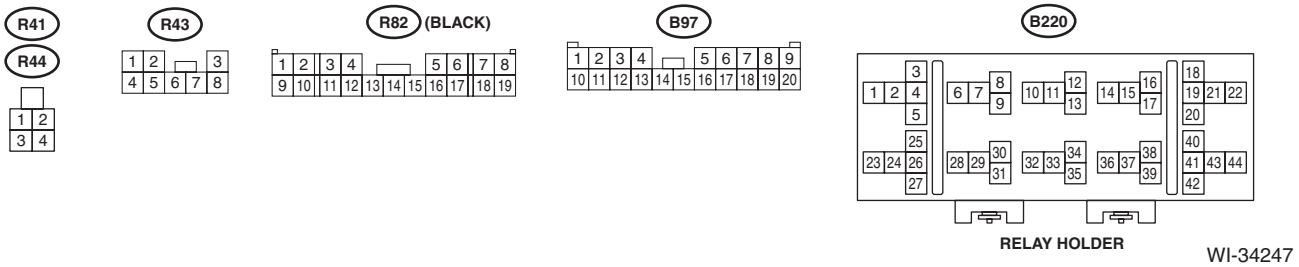

WI-34247

48.Security System

A: WIRING DIAGRAM

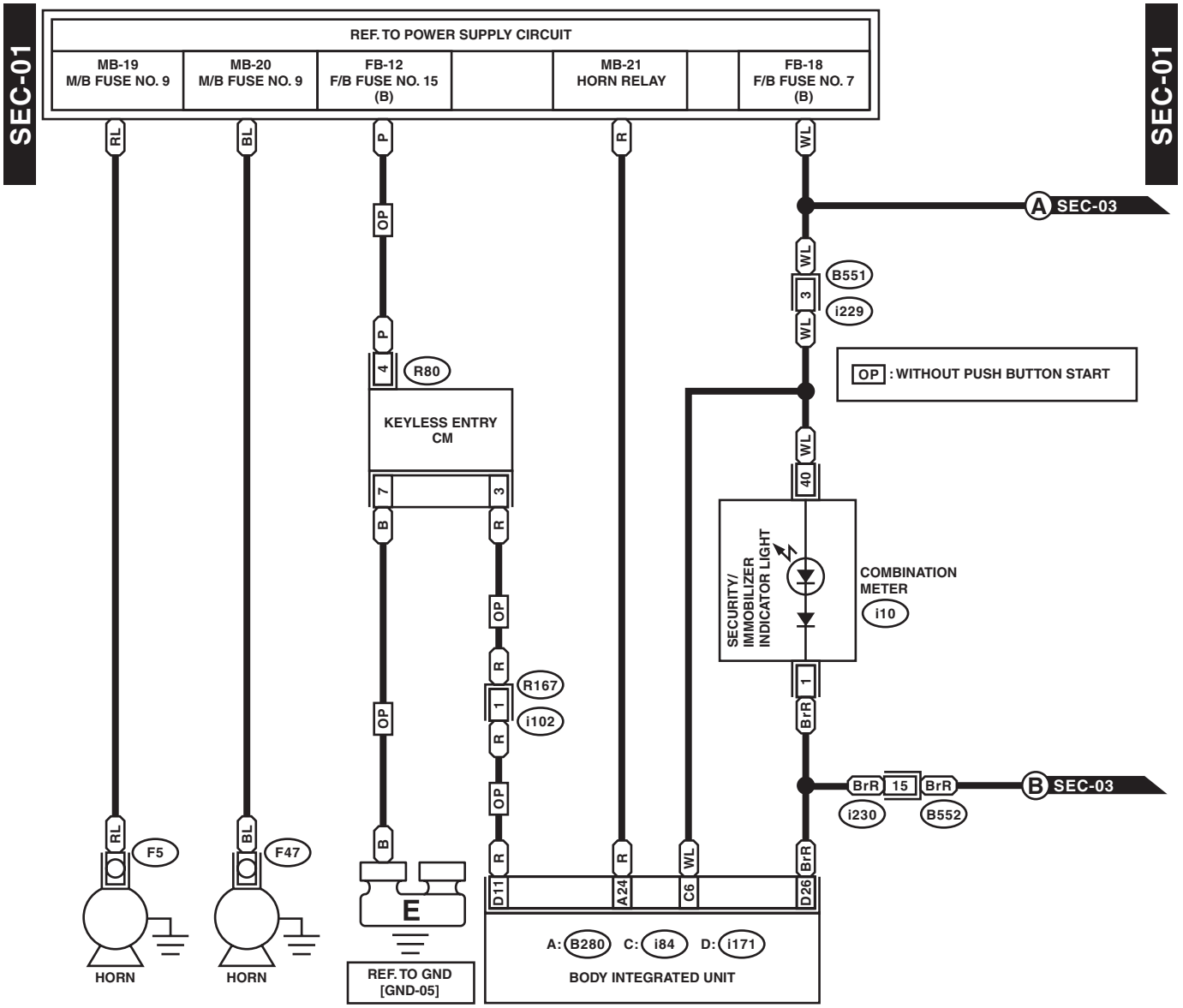

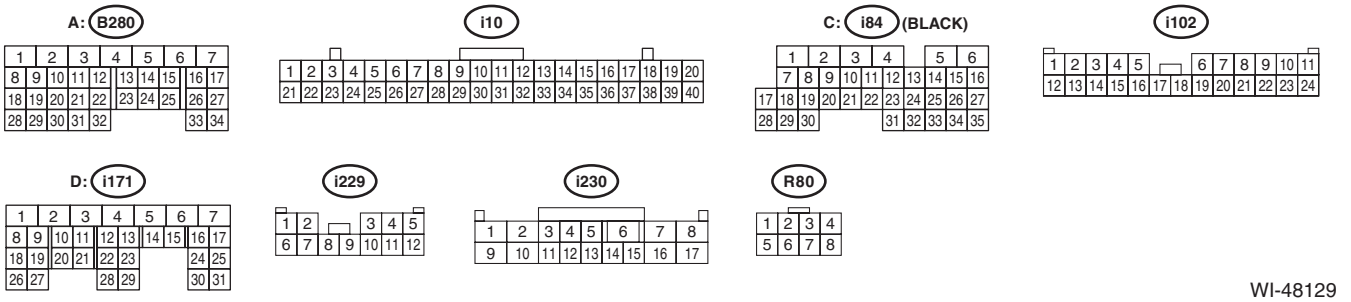

WI-48129

WIRING SYSTEM

SEC-02

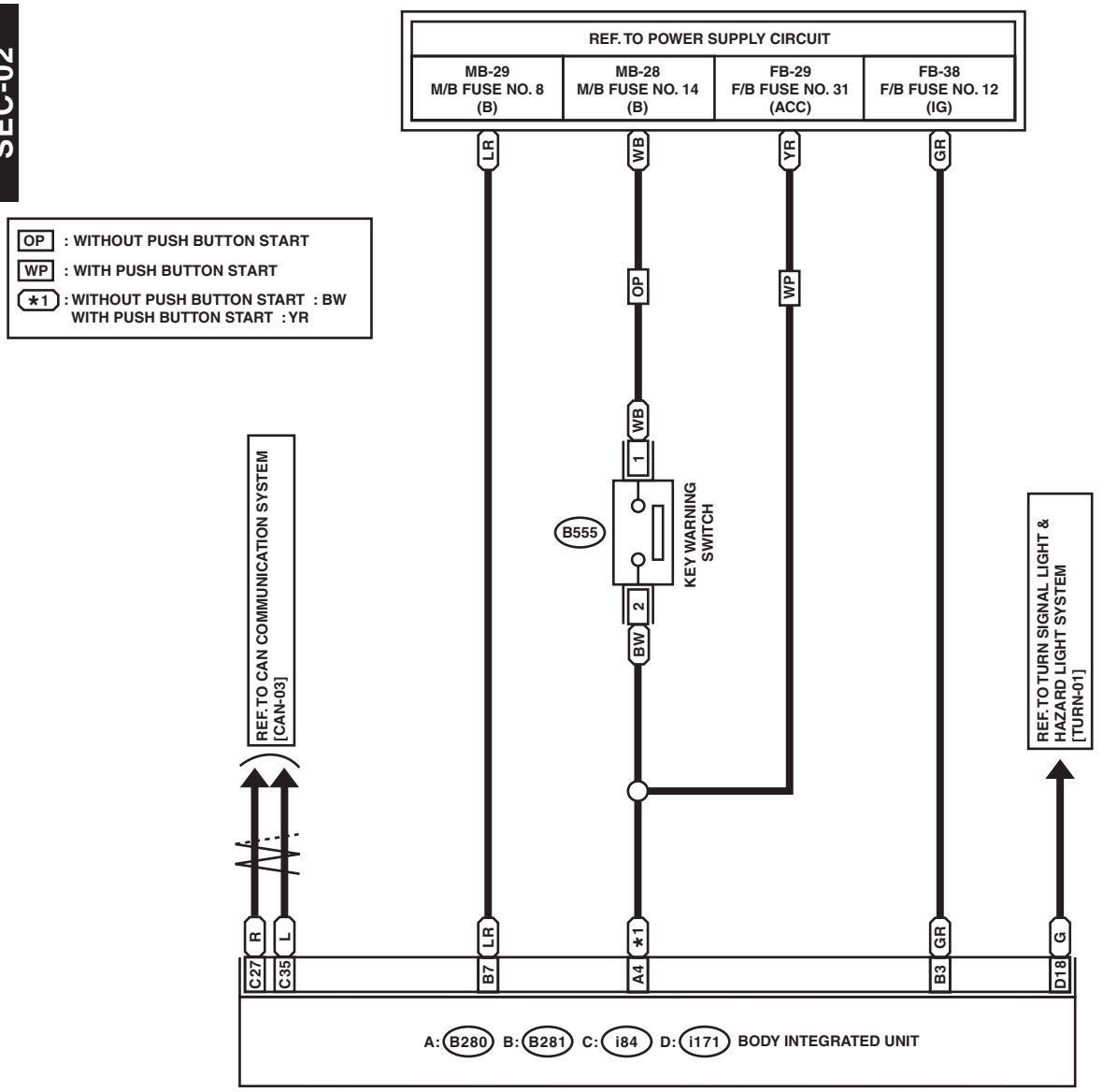

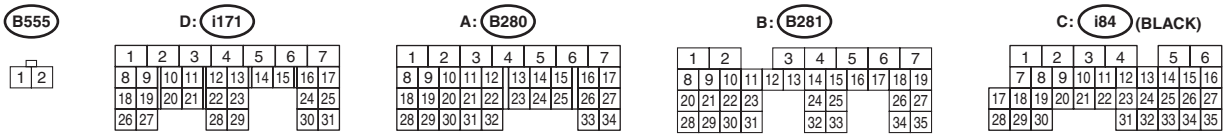

WI-48152

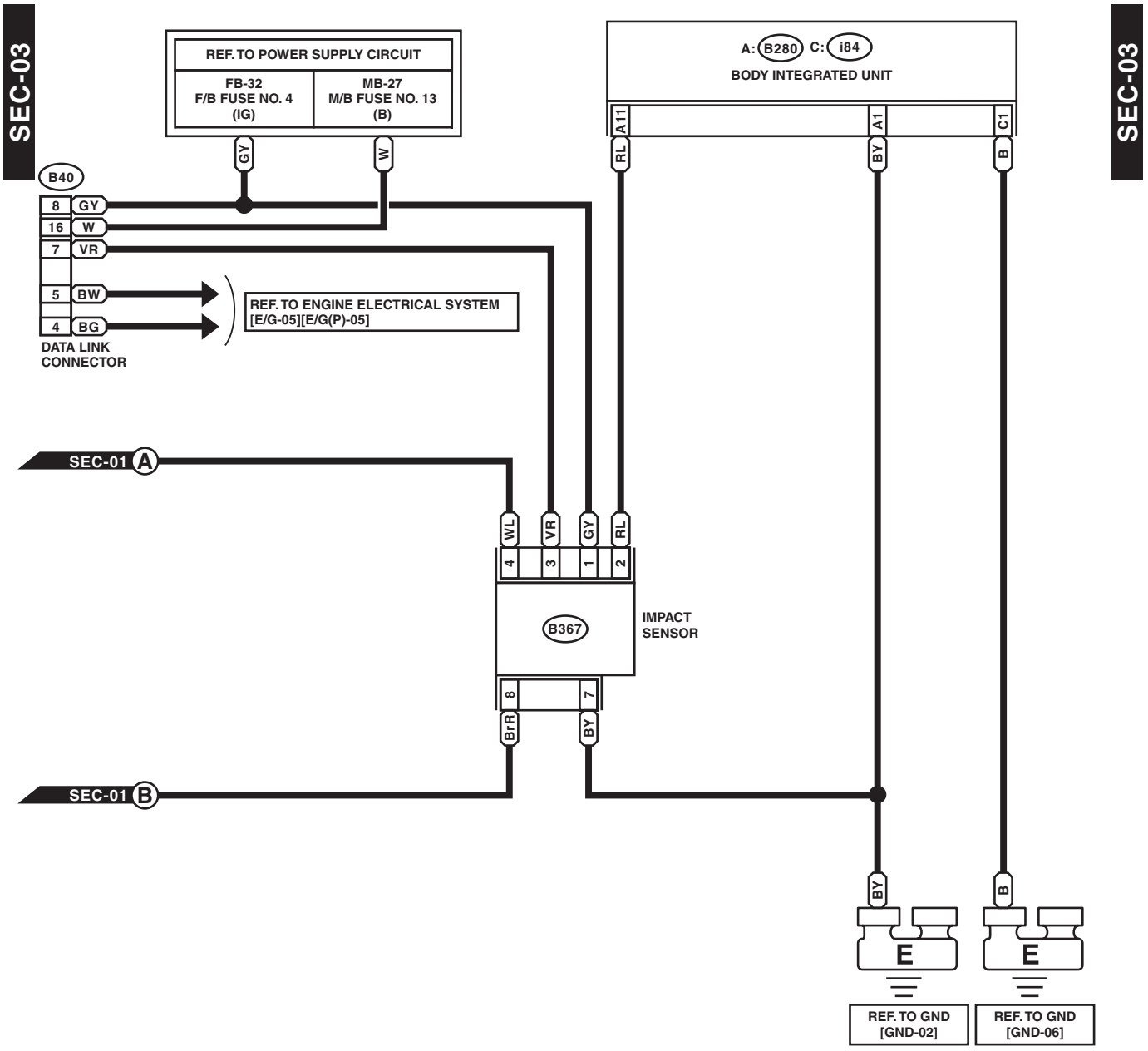
SEC-03
SEC-03
REF. TO POWER SUPPLY CIRCUIT
FB-32
F/B FUSE NO. 4
(IG)
MB-27
M/B FUSE NO. 13
(B)
GY
W
A: B280 C: i84
BODY INTEGRATED UNIT
A11
A1
C1
RL
BY
B
B40
8 GY
16 W
7 VR
5 BW
4 BG
DATA LINK
CONNECTOR
REF. TO ENGINE ELECTRICAL SYSTEM
[E/G-05][E/G(P)-05]
SEC-01 A
WL
VR
GY
RL
4
3
1
2
B367
IMPACT
SENSOR
8
7
BrR
BY
SEC-01 B
BY
B
E
E
REF. TO GND
[GND-02]
REF. TO GND
[GND-06]

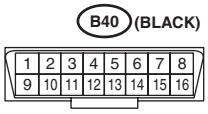
B40 (BLACK)
1 2 3 4 5 6 7 8
9 10 11 12 13 14 15 16

B367
1 2 3 4
5 6 7 8

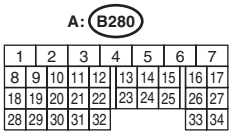
A: B280
1 2 3 4 5 6 7
8 9 10 11 12 13 14 15 16 17
18 19 20 21 22 23 24 25 26 27
28 29 30 31 32 33 34

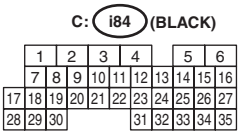
C: i84 (BLACK)
1 2 3 4 5 6
7 8 9 10 11 12 13 14 15 16
17 18 19 20 21 22 23 24 25 26 27
28 29 30 31 32 33 34 35

WI-48130

SEC-04

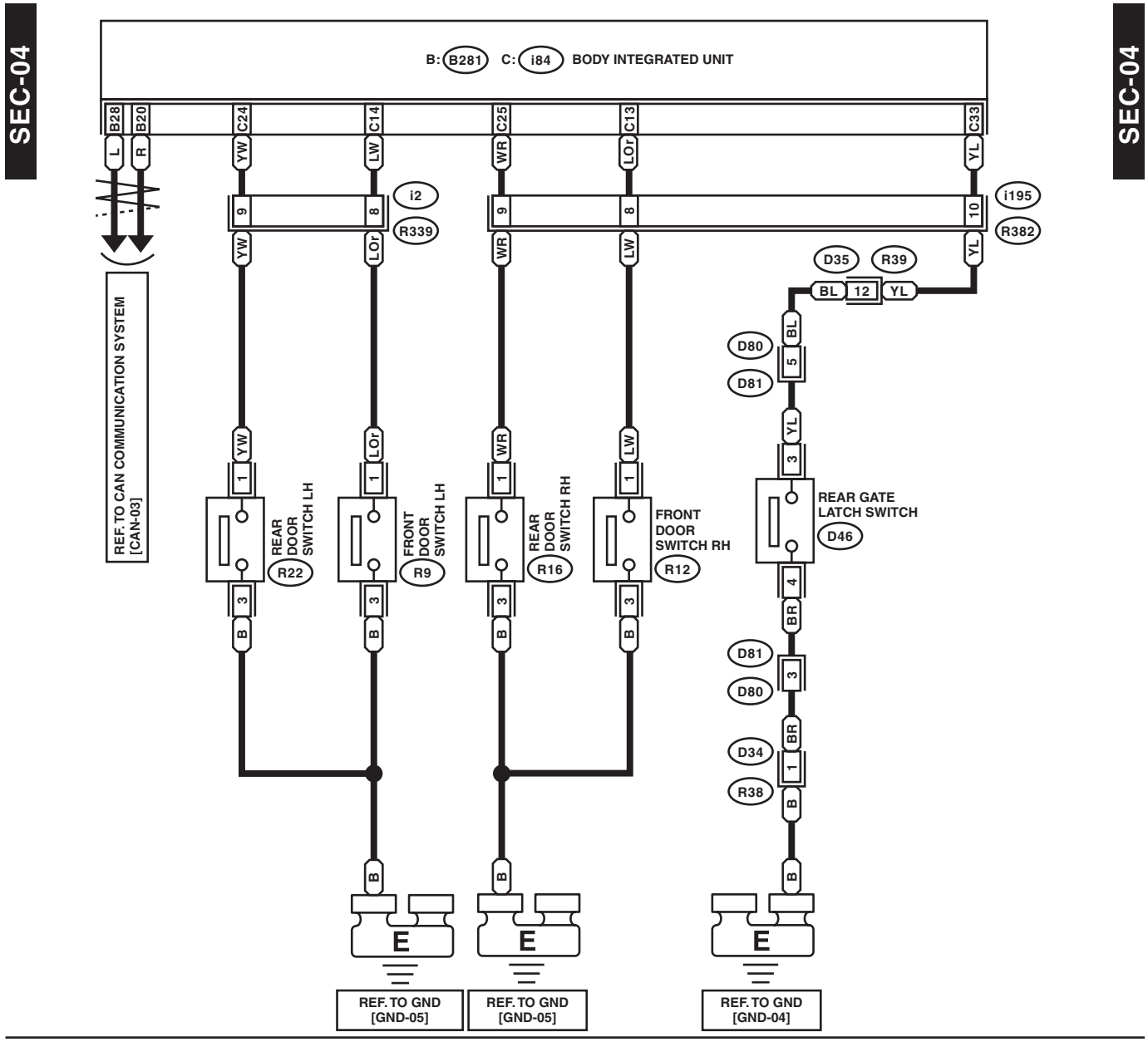

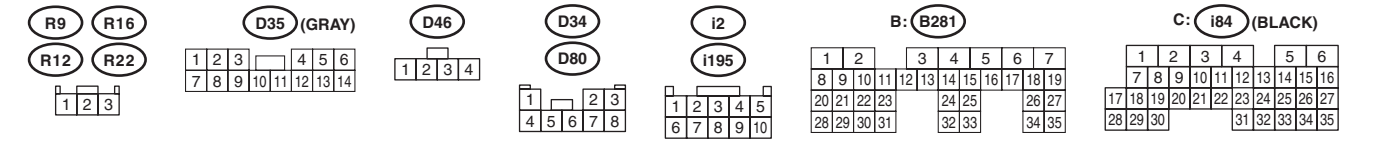

WI-42273

49.Shift Lock Control System

A: WIRING DIAGRAM

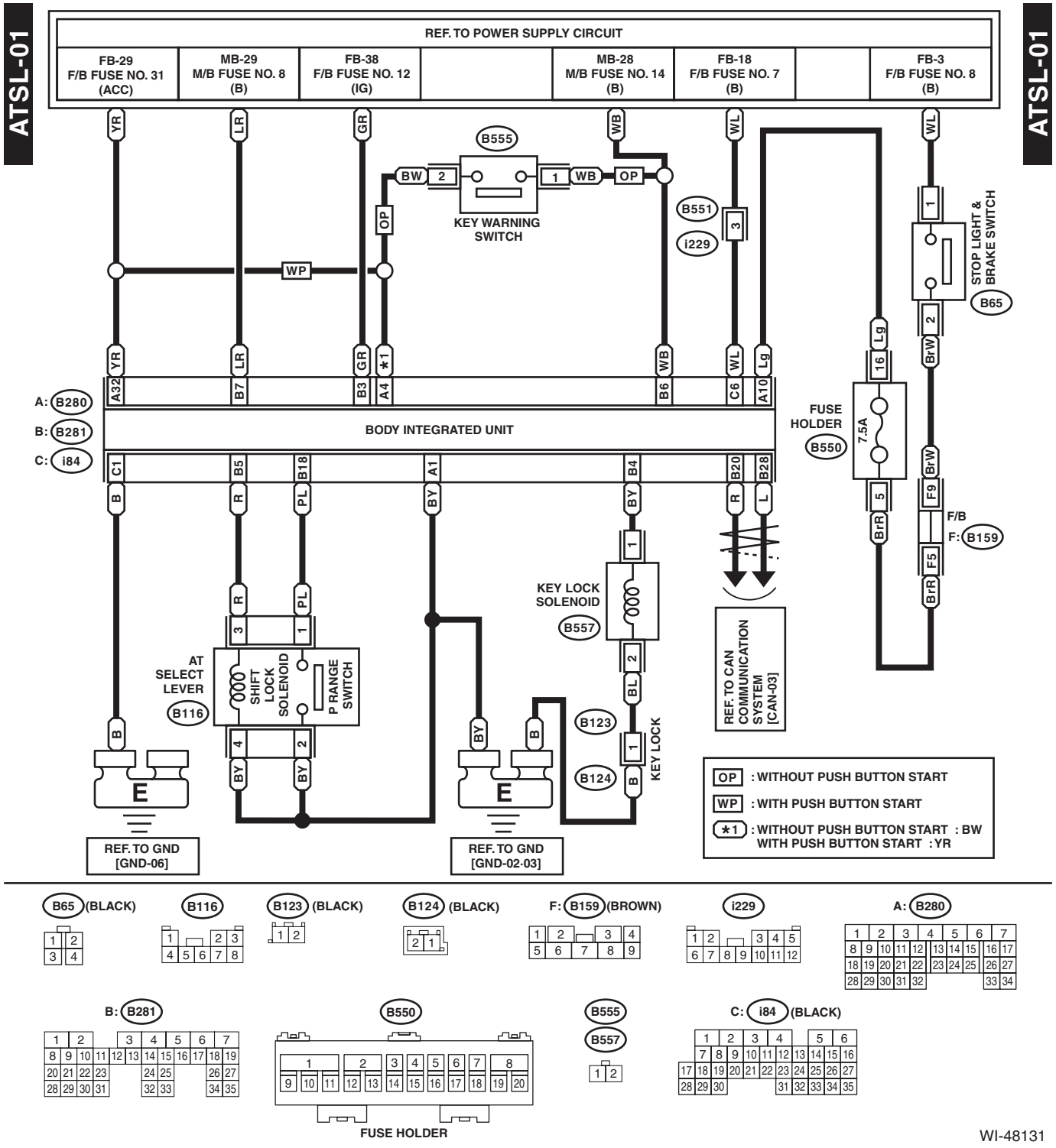

WI-48131

50.Speedometer System

A: WIRING DIAGRAM

SP-01

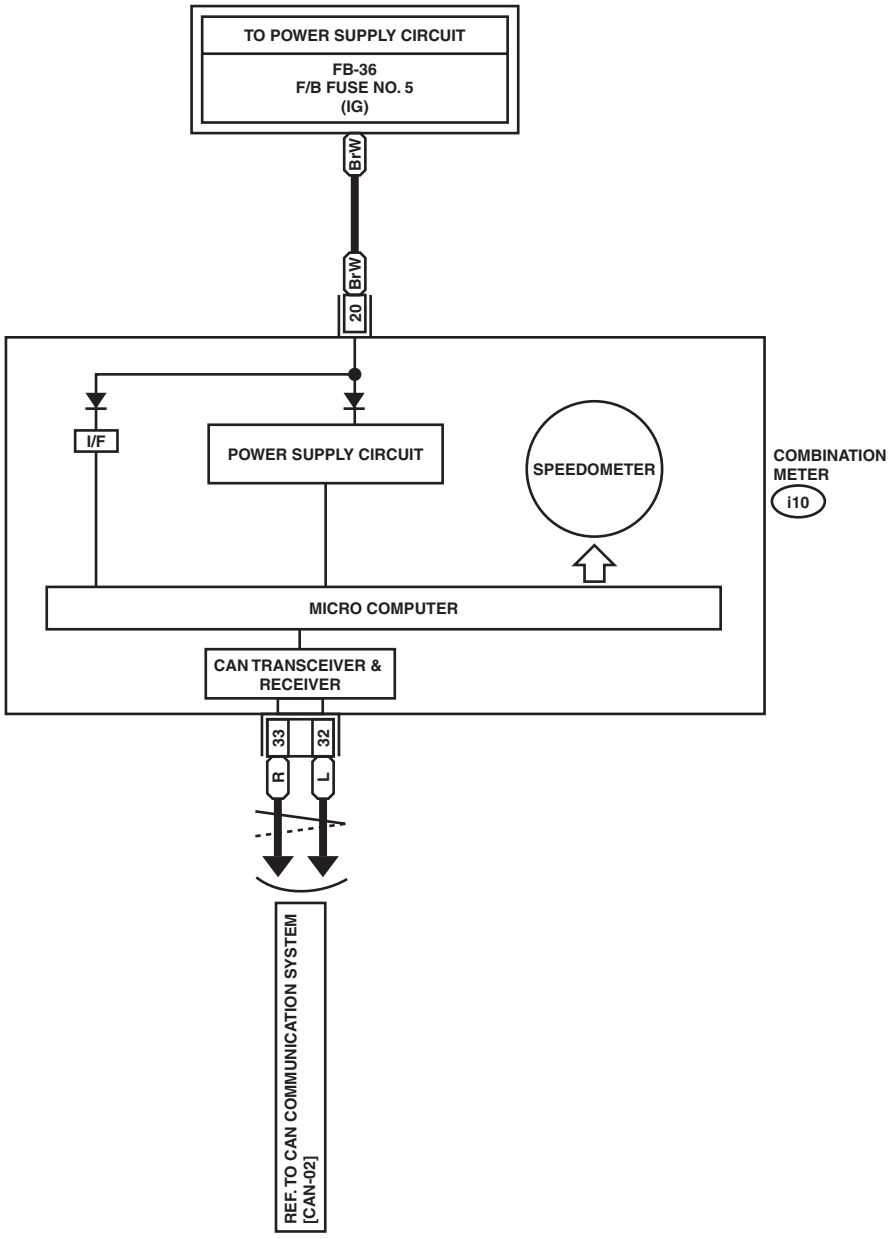

SP-01

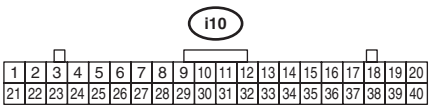

WI-42275

51.Starter System

A: WIRING DIAGRAM

ST-01

ST-01

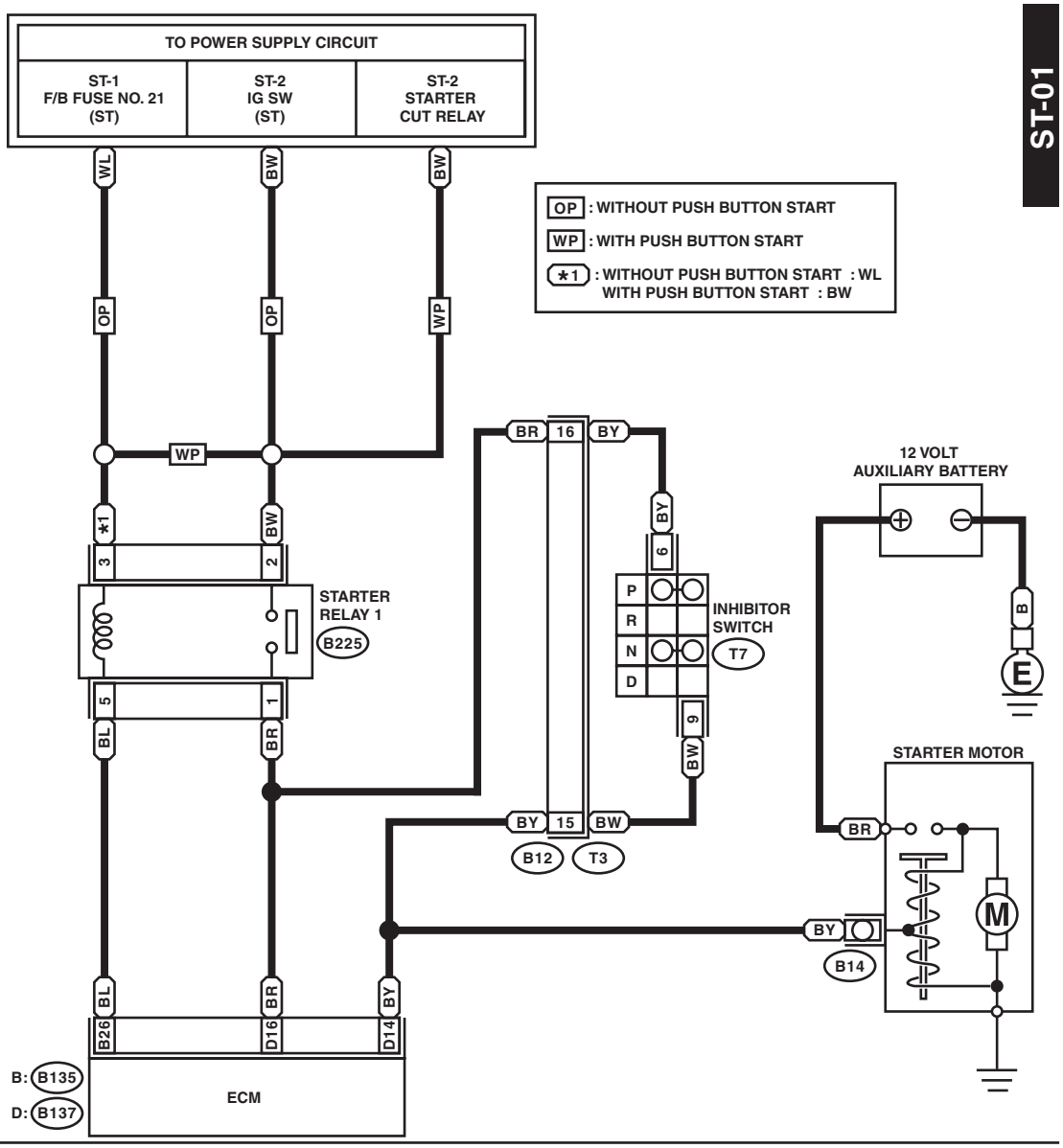

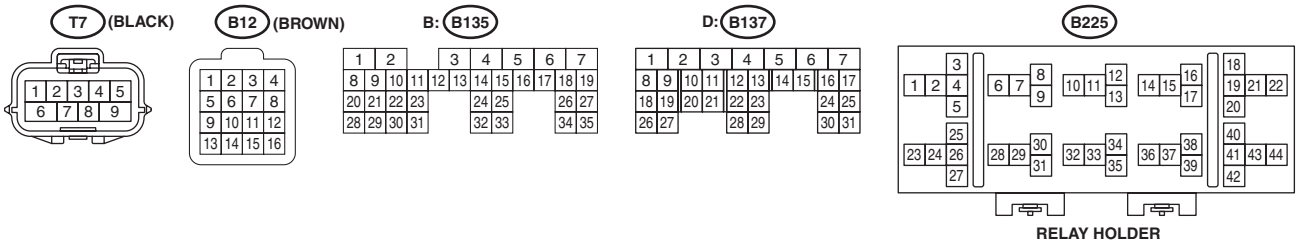

WI-42276

52.Stop Light System

A: WIRING DIAGRAM

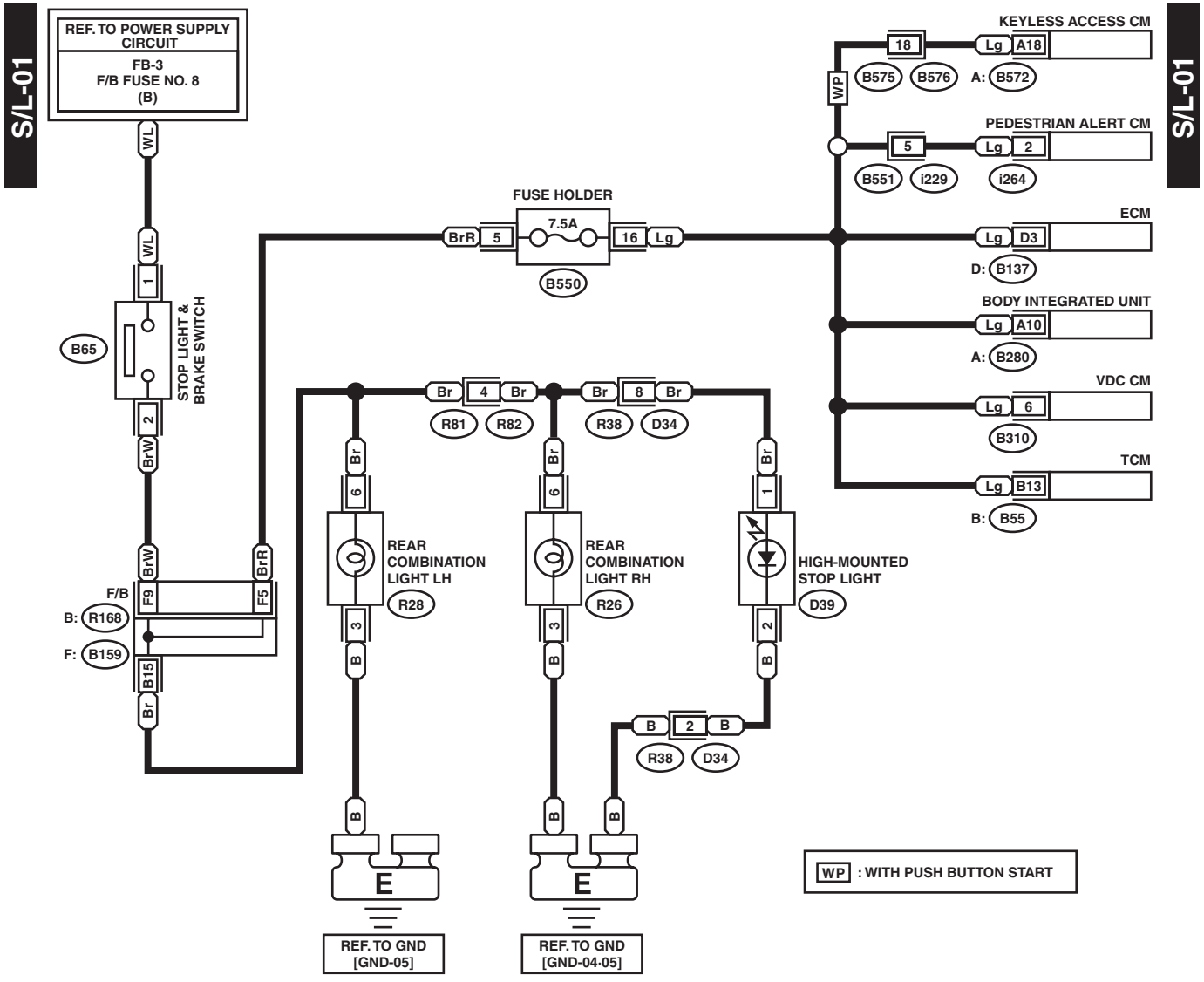

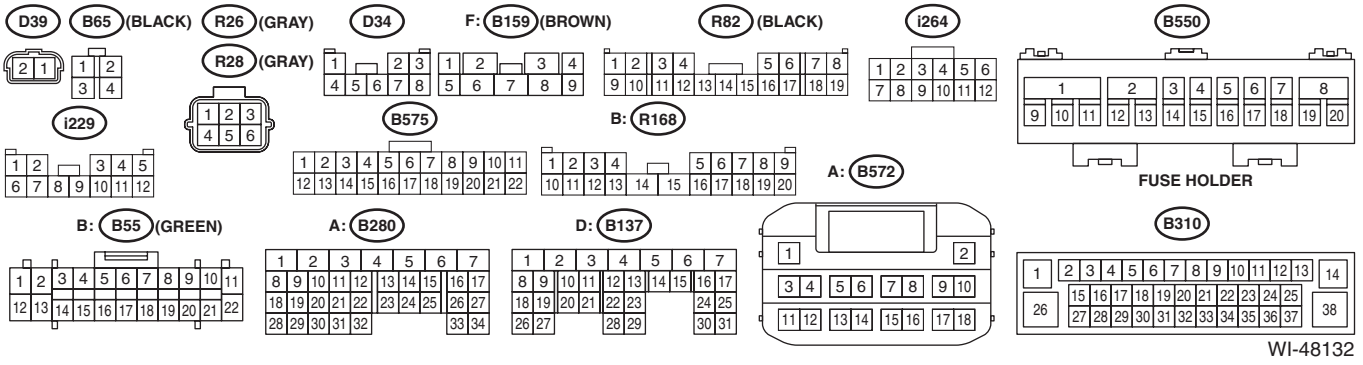

WI-48132

53.Sunroof Control System

A: WIRING DIAGRAM

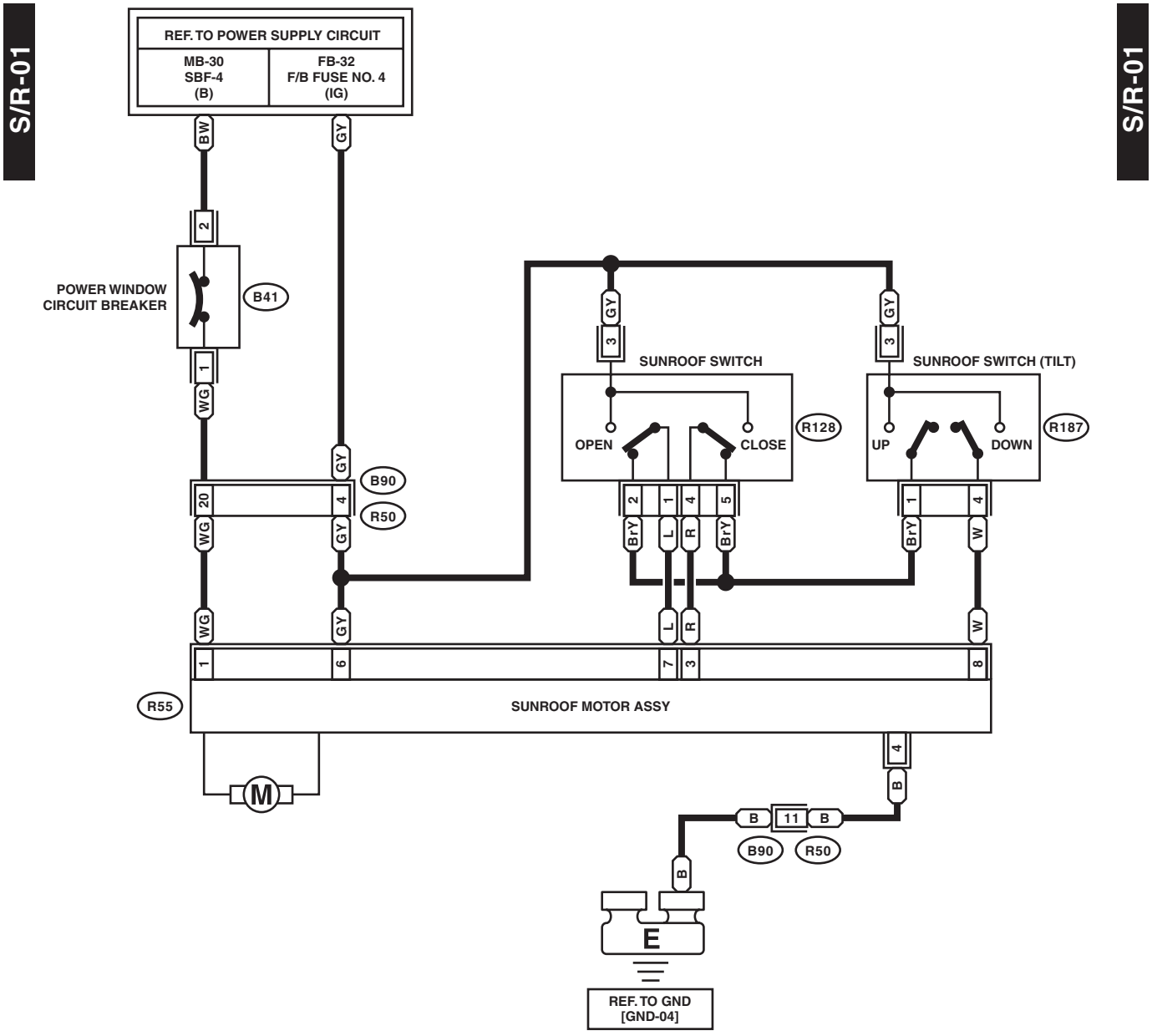

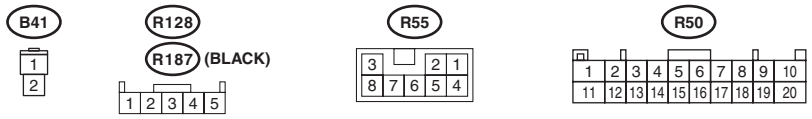

WI-48133

54.Tire Pressure Monitoring System

A: WIRING DIAGRAM

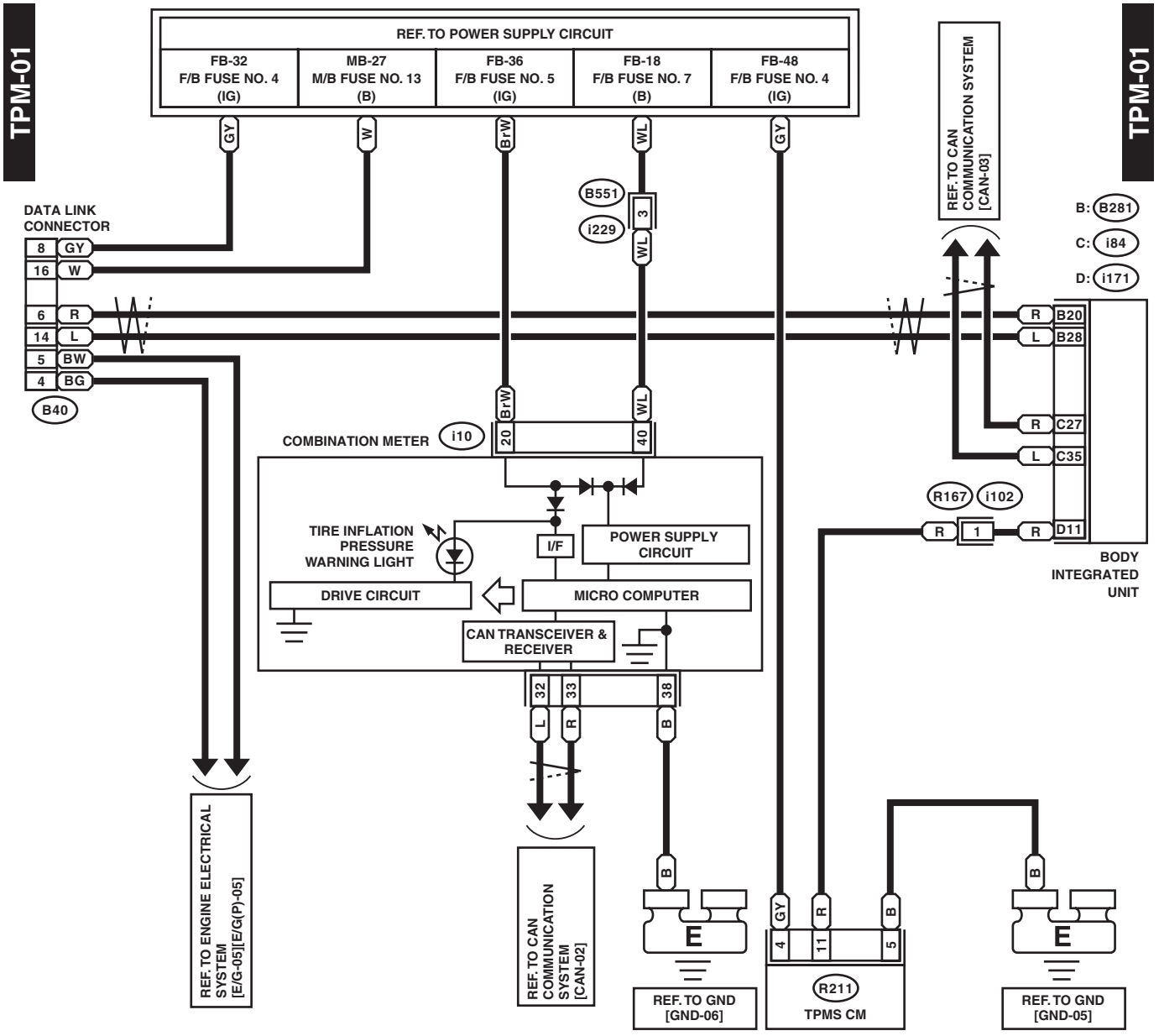

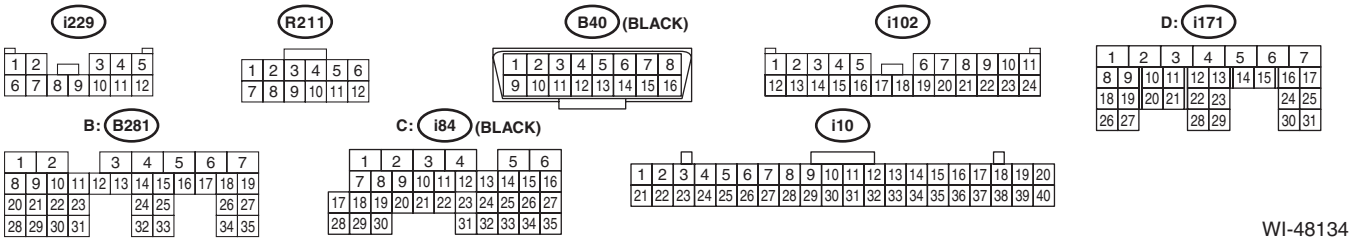

WI-48134

55.Turn Signal Light and Hazard Light System

A: WIRING DIAGRAM

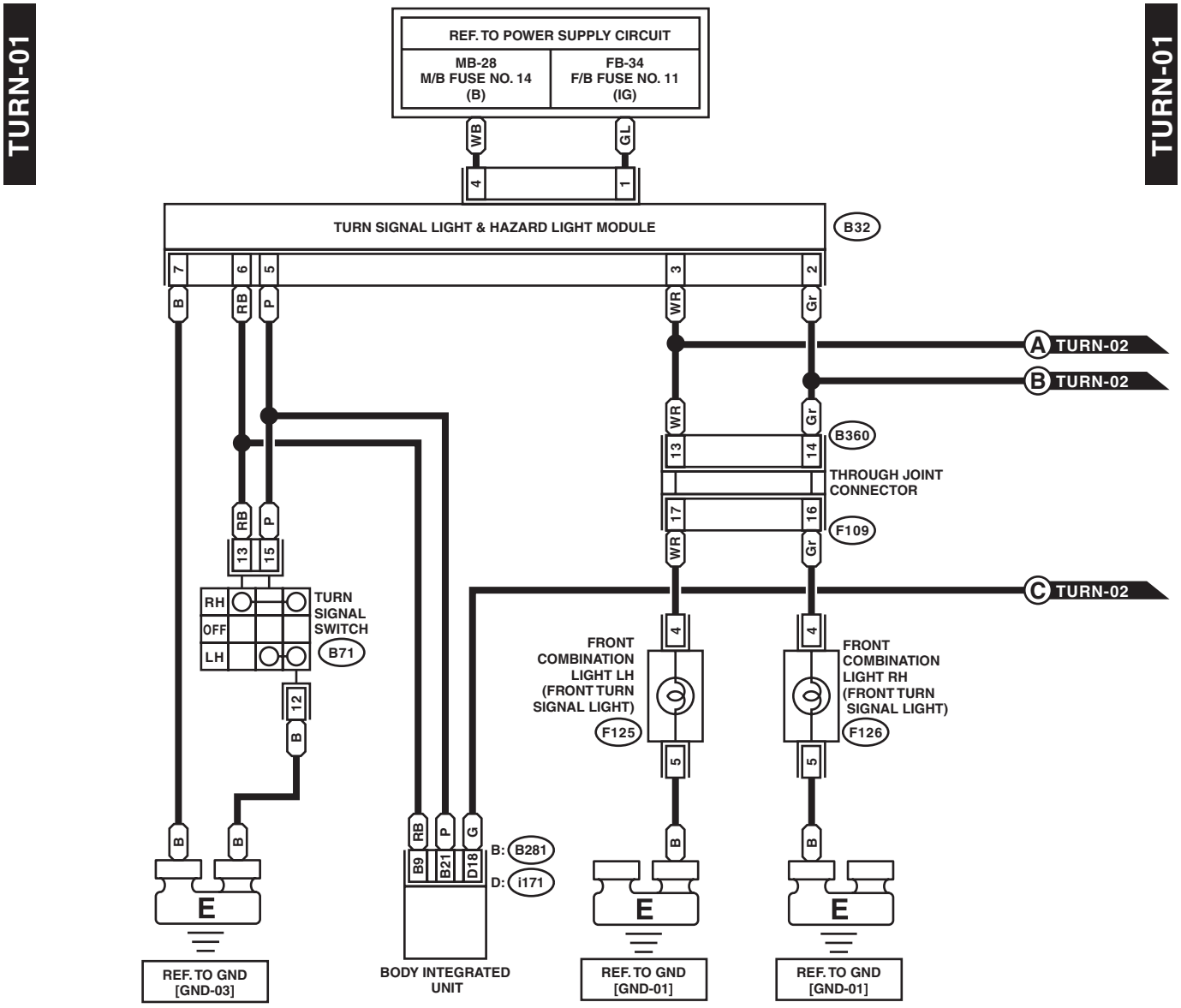

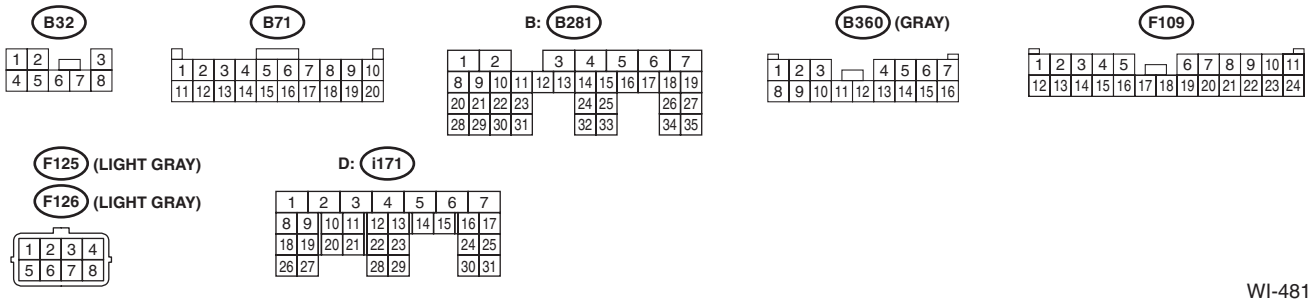

WI-48135

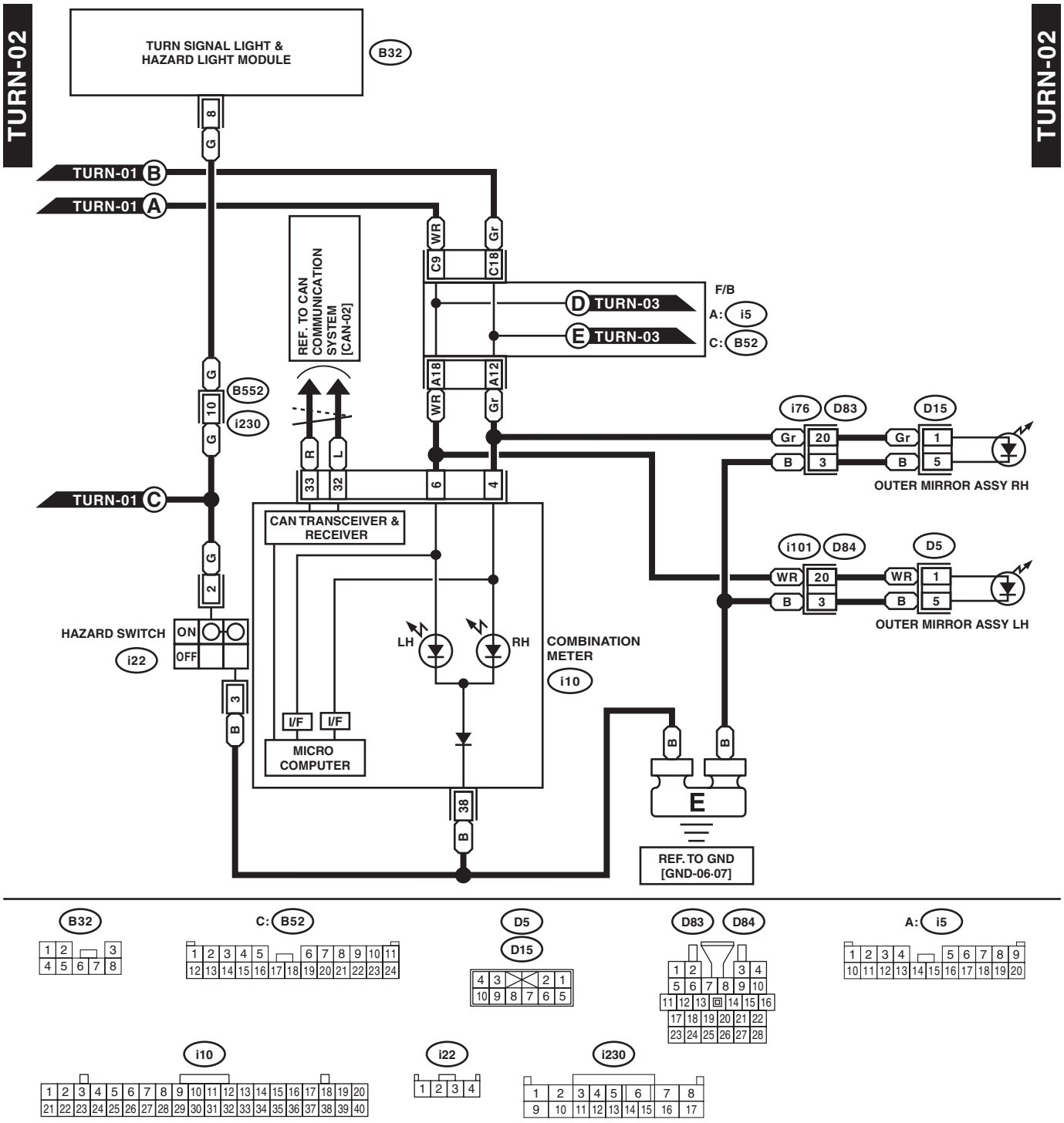
TURN-02
TURN-02
TURN SIGNAL LIGHT & HAZARD LIGHT MODULE
B32
TURN-01 B
TURN-01 A
TURN-01 C
REF. TO CAN COMMUNICATION SYSTEM [CAN-02]
F/B
D TURN-03
E TURN-03
A: i5
C: B52
B552
i230
i76
D83
D15
OUTER MIRROR ASSY RH
i101
D84
D5
OUTER MIRROR ASSY LH
CAN TRANSCEIVER & RECEIVER
HAZARD SWITCH
i22
ON
OFF
LH
RH
COMBINATION METER
i10
I/F
I/F
MICRO COMPUTER
REF. TO GND [GND-06-07]

B32
C: B52
D5
D15
D83
D84
A: i5
i10
i22
i230

WI-48136

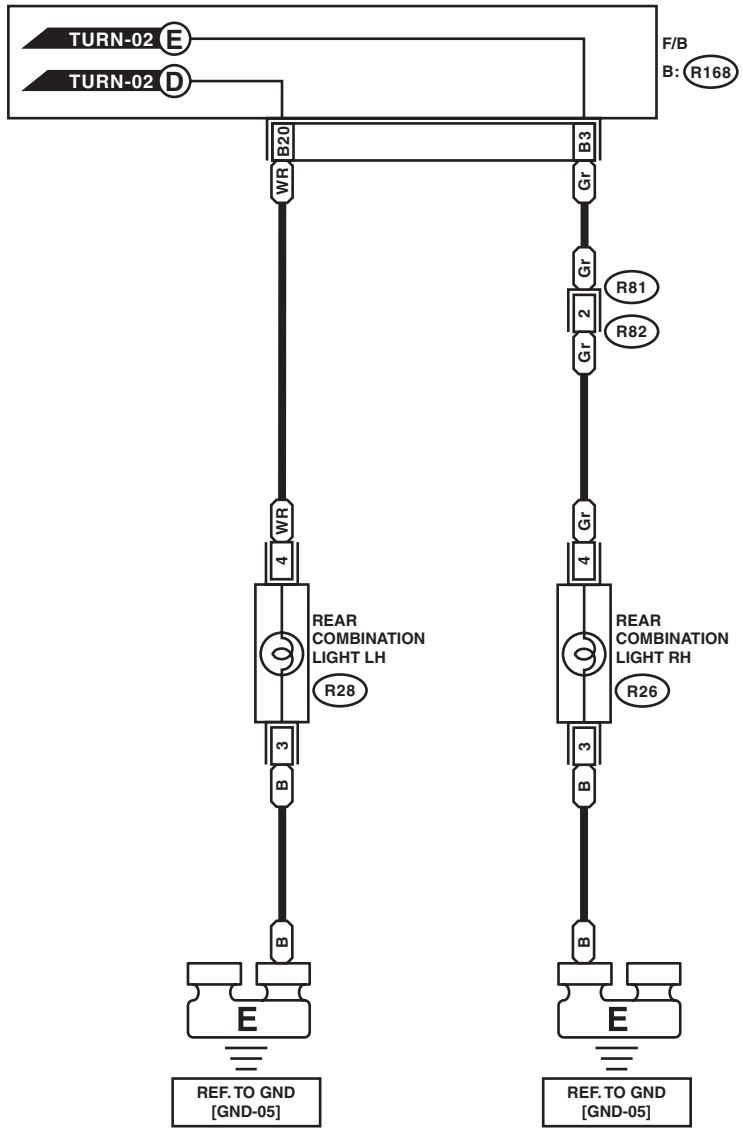
TURN-02 E
TURN-02 D
F/B
B: R168
B20
B3
WR
Gr
Gr
R81
2
R82
Gr
WR
4
Gr
4
REAR COMBINATION LIGHT LH
R28
REAR COMBINATION LIGHT RH
R26
3
B
3
B
B
B
E
E
REF. TO GND [GND-05]
REF. TO GND [GND-05]

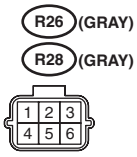
R26 (GRAY)
R28 (GRAY)
1 2 3
4 5 6

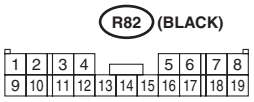
R82 (BLACK)
1 2 3 4 5 6 7 8
9 10 11 12 13 14 15 16 17 18 19

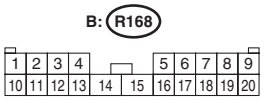
B: R168
1 2 3 4 5 6 7 8 9
10 11 12 13 14 15 16 17 18 19 20

WI-48137

56.Pedestrian Alert System

A: WIRING DIAGRAM

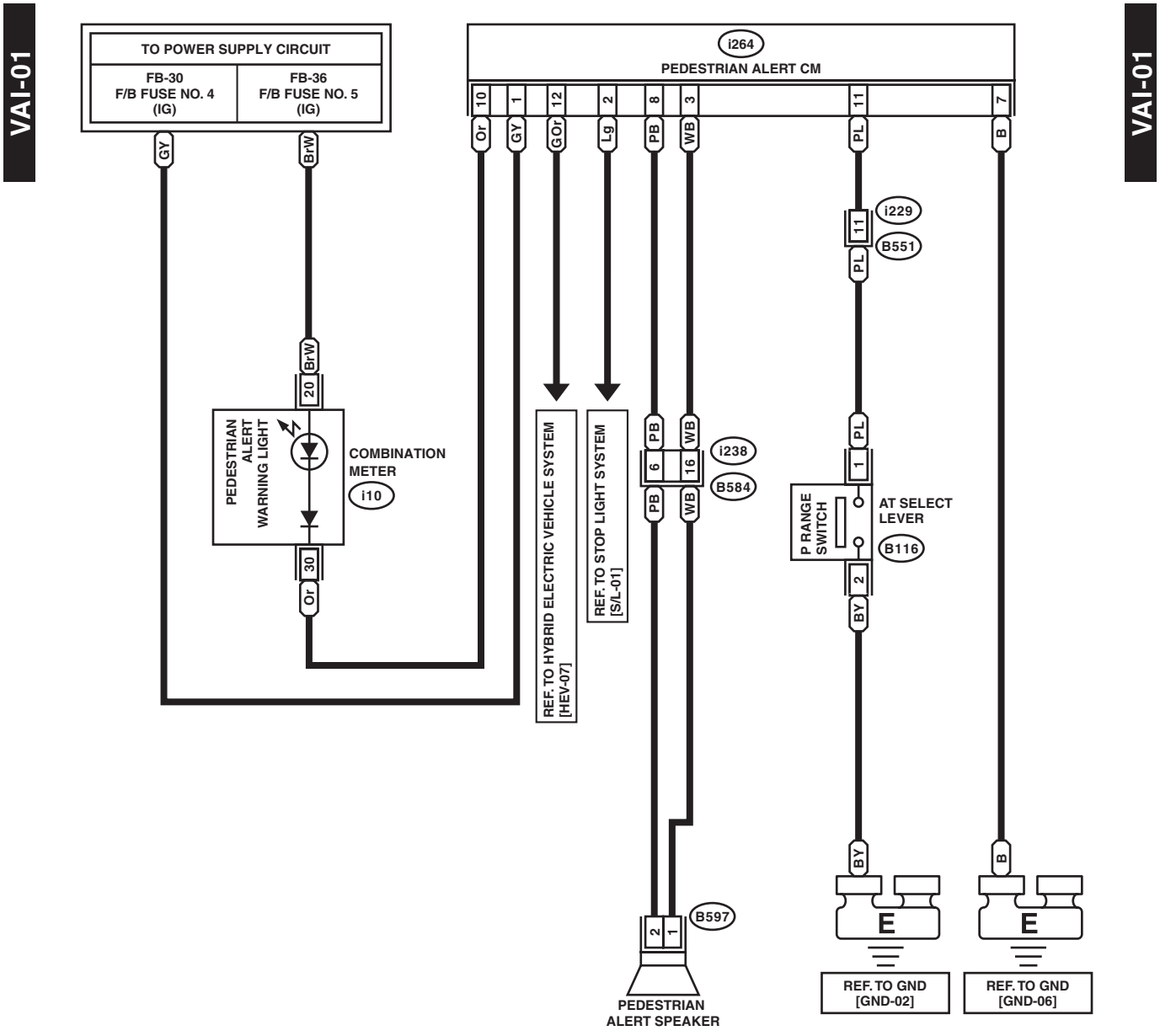

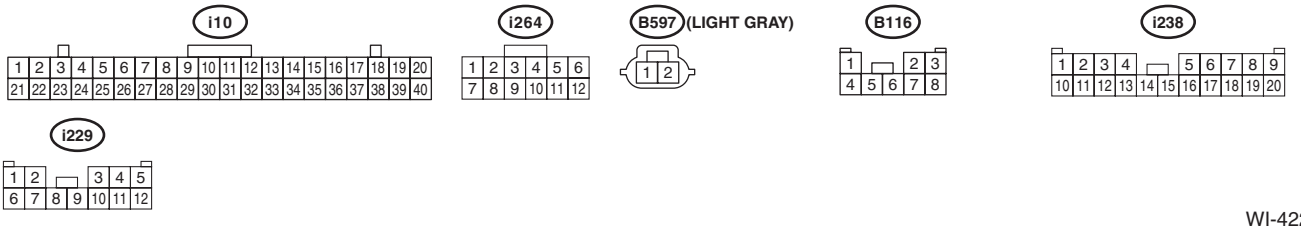

WI-42281

VAI-02

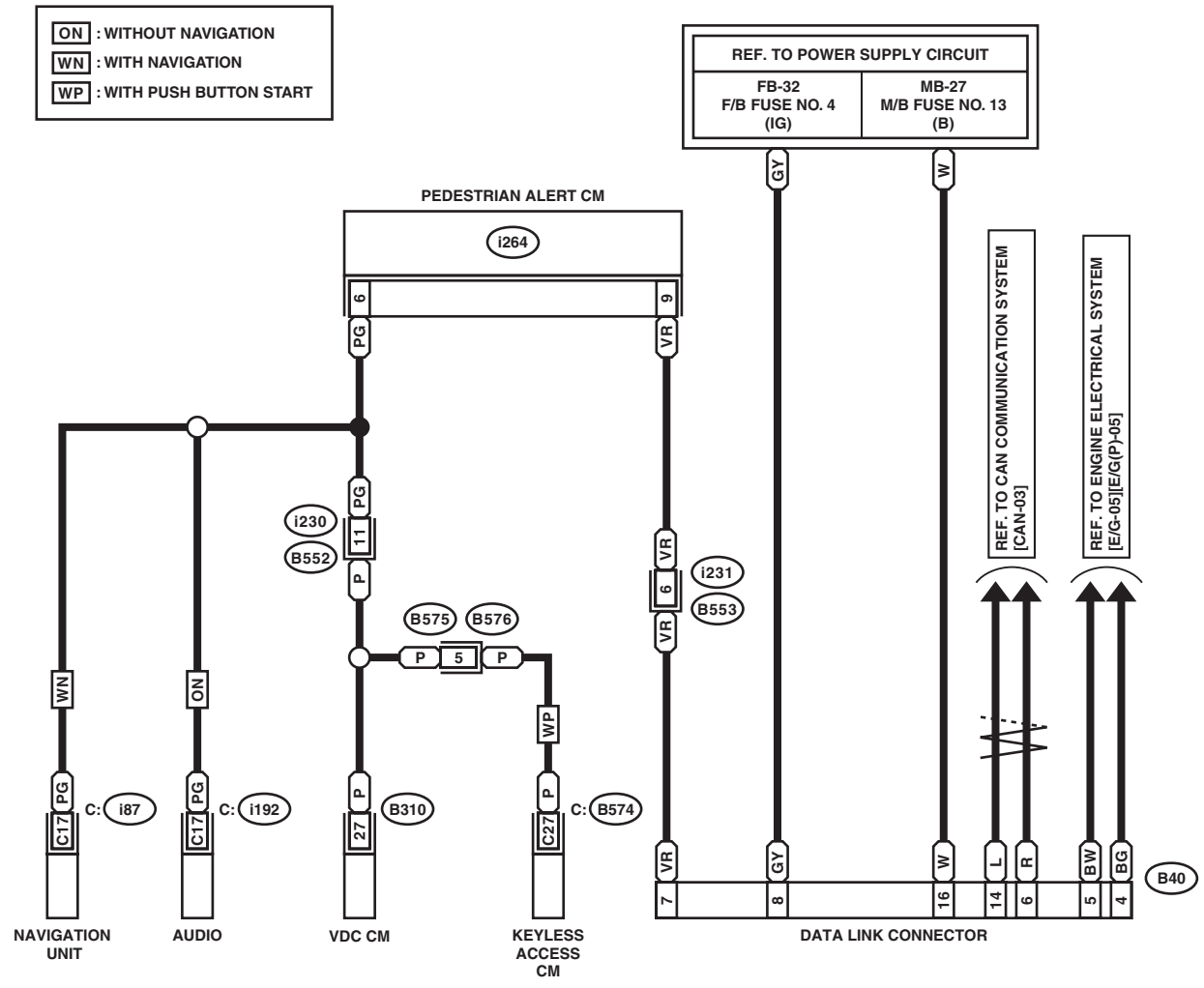

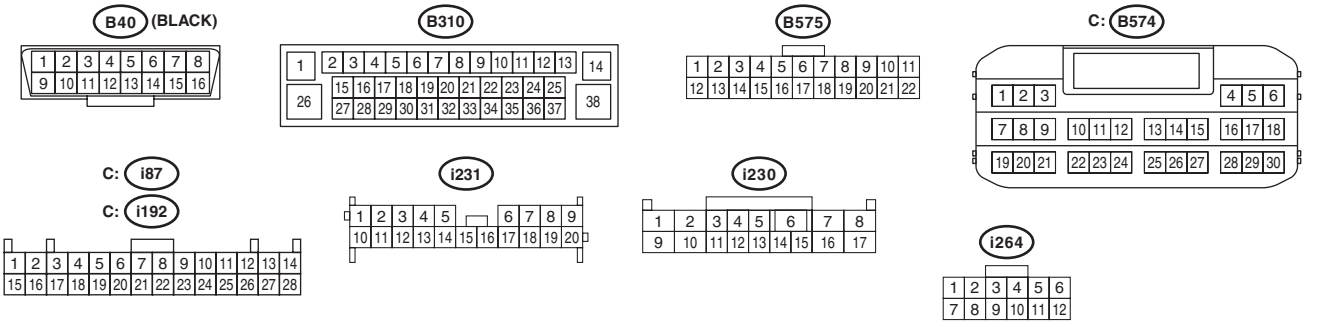

WI-48138

57.Vehicle Dynamics Control System

A: WIRING DIAGRAM

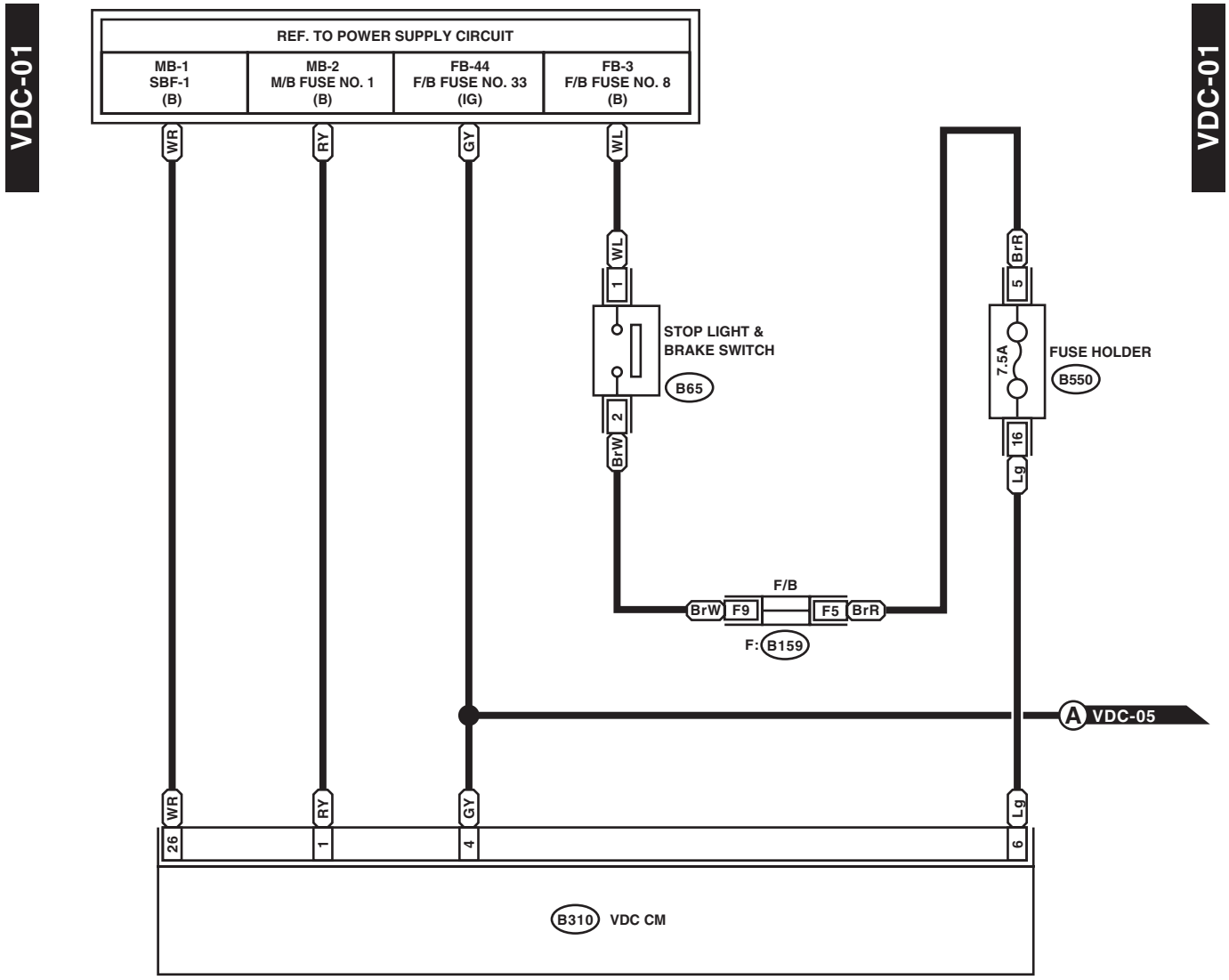

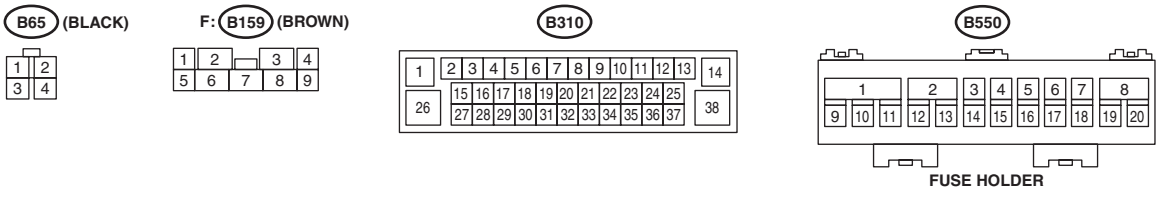

WI-48150

VDC-02

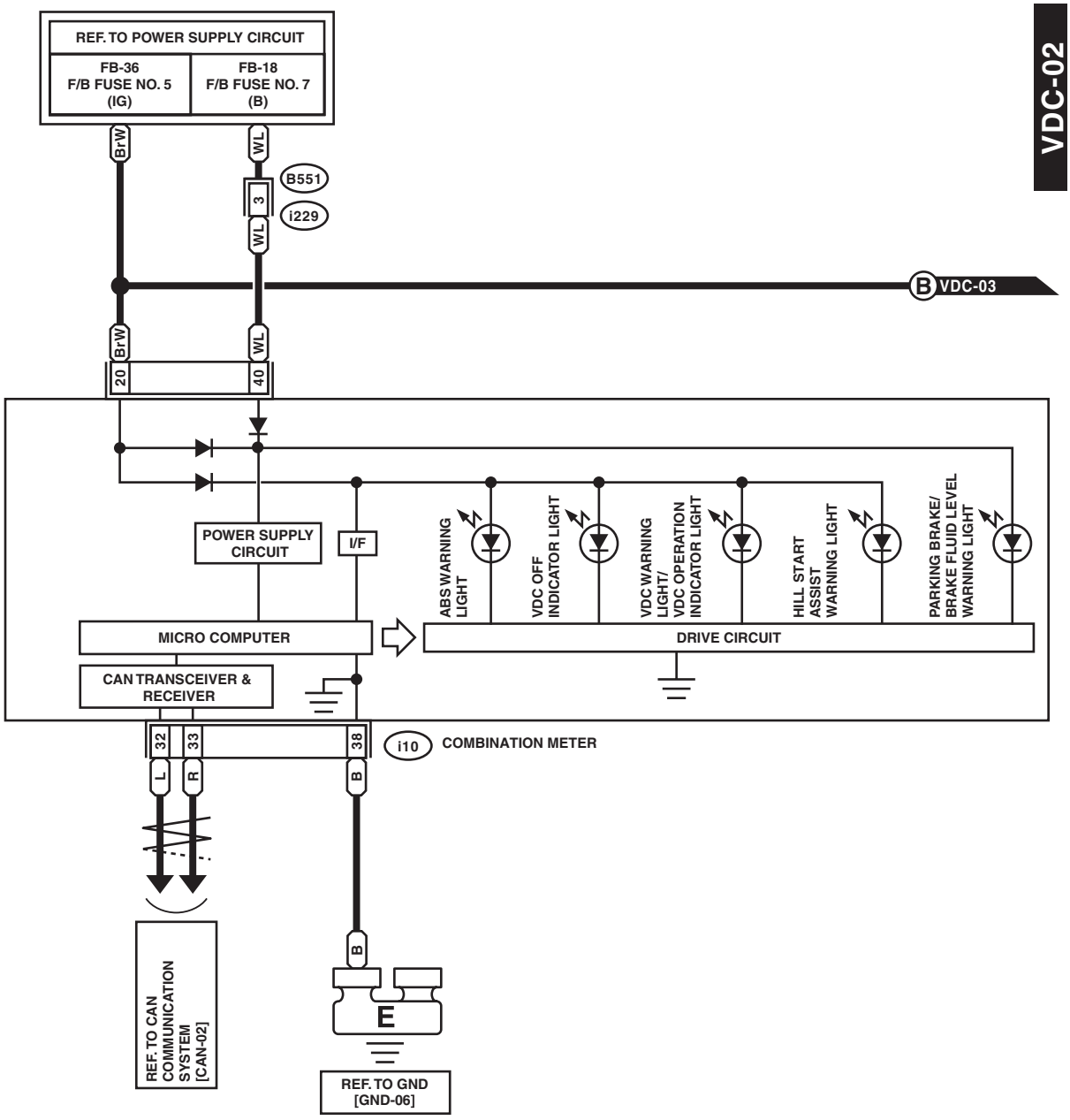

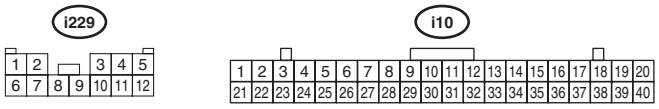

WI-48151

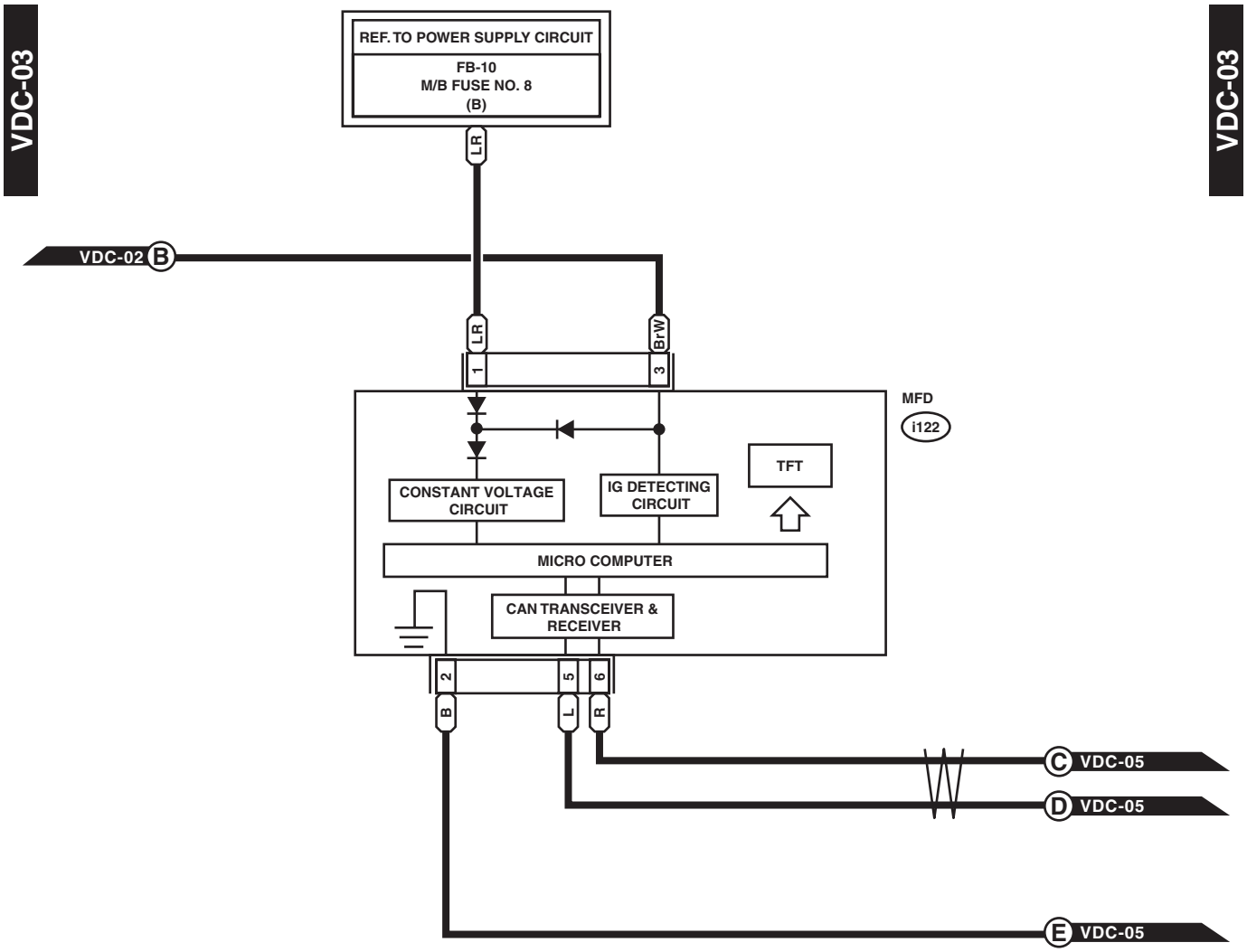
VDC-03
VDC-03
REF. TO POWER SUPPLY CIRCUIT
FB-10
M/B FUSE NO. 8
(B)
LR
VDC-02 B
LR
BrW
1
3
MFD
i122
TFT
CONSTANT VOLTAGE CIRCUIT
IG DETECTING CIRCUIT
MICRO COMPUTER
CAN TRANSCEIVER & RECEIVER
2
5
6
B
L
R
C VDC-05
D VDC-05
E VDC-05

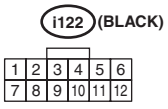
i122 (BLACK)
1 2 3 4 5 6
7 8 9 10 11 12

WI-48139

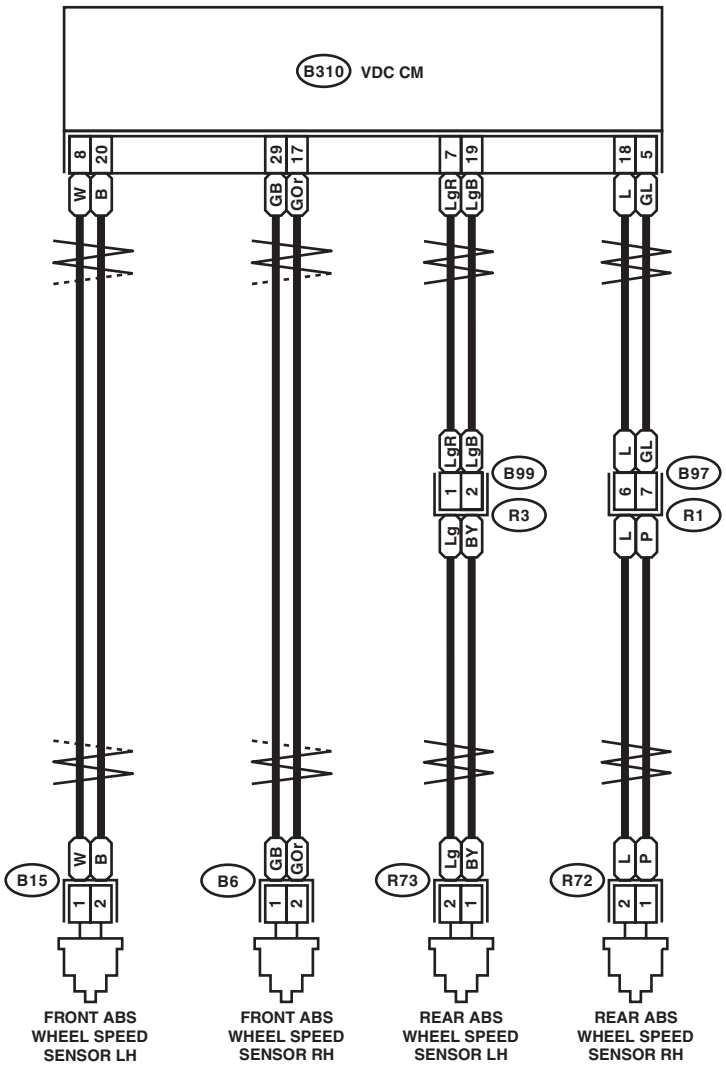

(LIGHT GRAY) B6 R72 (LIGHT GRAY)

(LIGHT GRAY) B15 R73 (LIGHT GRAY)

B97

B99

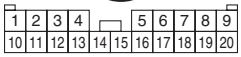

B310

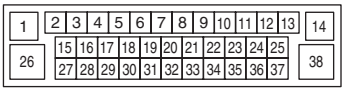

WI-48140

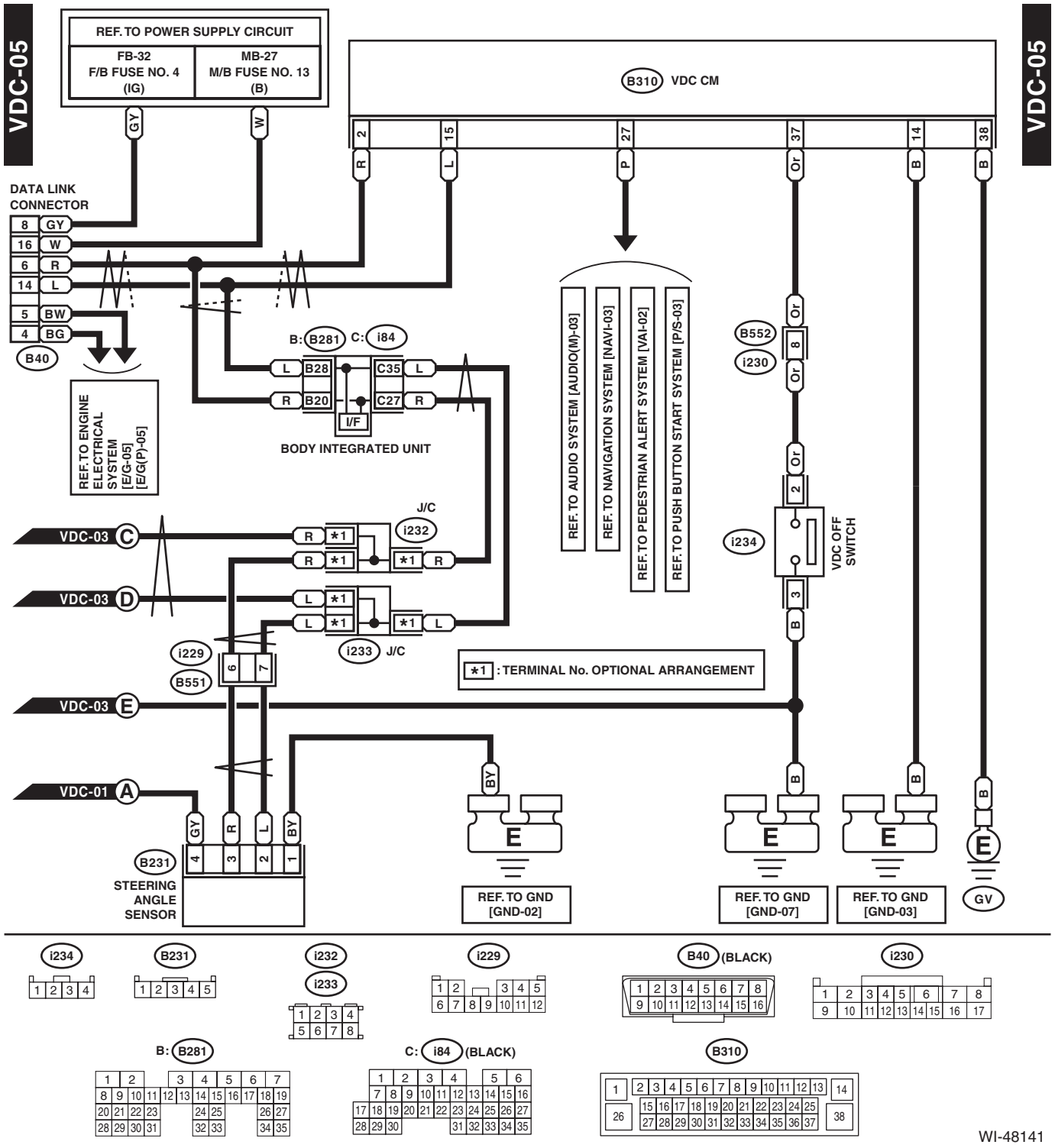
VDC-05
VDC-05
REF. TO POWER SUPPLY CIRCUIT
FB-32
F/B FUSE NO. 4
(IG)
MB-27
M/B FUSE NO. 13
(B)
B310 VDC CM
DATA LINK CONNECTOR
B40
REF. TO ENGINE ELECTRICAL SYSTEM [E/G-05] [E/G(P)-05]
B: B281 C: i84
BODY INTEGRATED UNIT
I/F
REF. TO AUDIO SYSTEM [AUDIO(M)-03]
REF. TO NAVIGATION SYSTEM [NAVI-03]
REF. TO PEDESTRIAN ALERT SYSTEM [VAI-02]
REF. TO PUSH BUTTON START SYSTEM [P/S-03]
B552
i230
i234
VDC OFF SWITCH
J/C
i232
i233
i229
B551
VDC-03 C
VDC-03 D
VDC-03 E
VDC-01 A
*1 : TERMINAL No. OPTIONAL ARRANGEMENT
B231
STEERING ANGLE SENSOR
REF. TO GND [GND-02]
REF. TO GND [GND-07]
REF. TO GND [GND-03]
GV
i234
B231
i232
i233
i229
B40 (BLACK)
i230
B: B281
C: i84 (BLACK)
B310

WI-48141

58.Wiper Deicer System

A: WIRING DIAGRAM

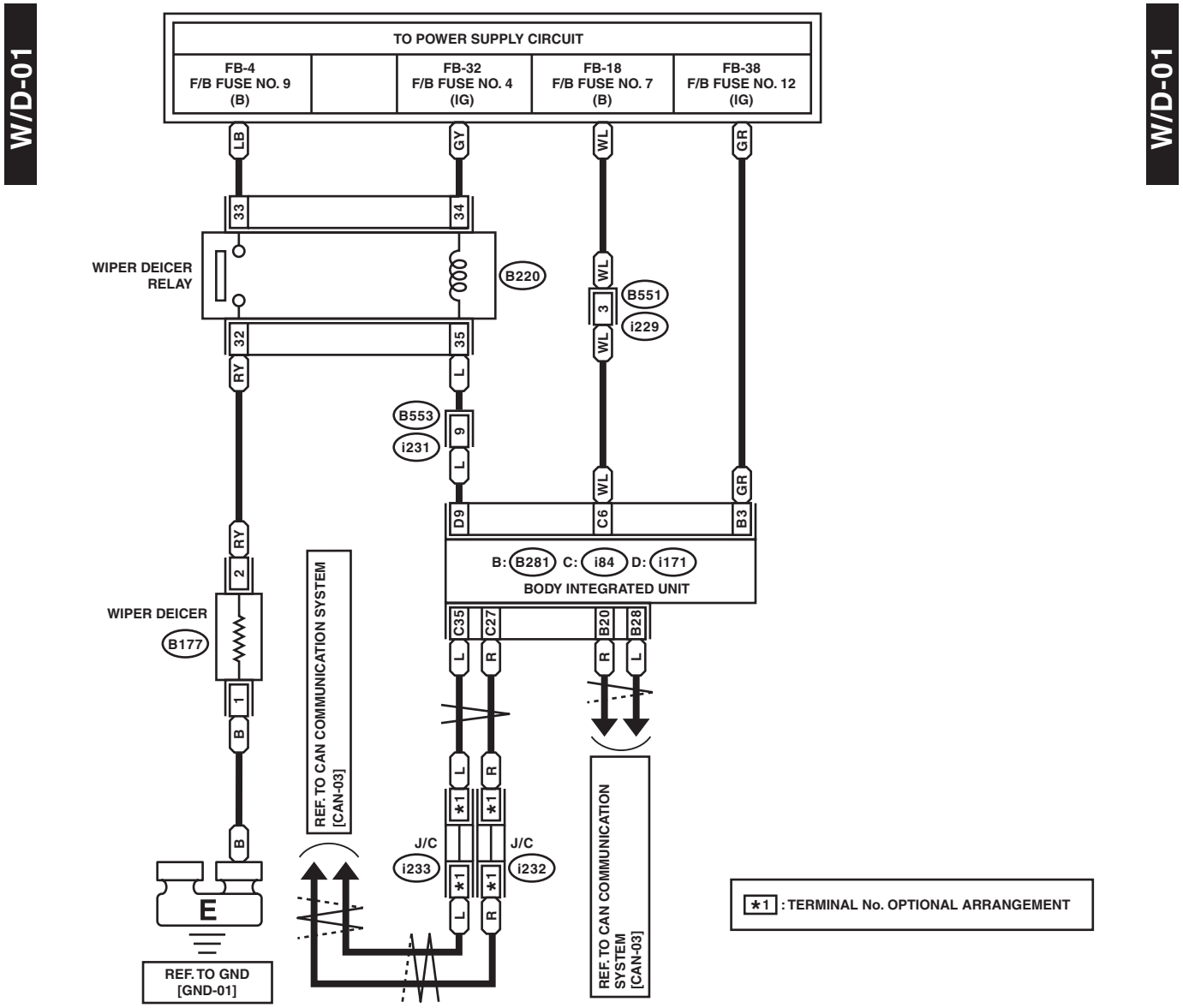

WI-42287

59.Harness Components Location

A: LOCATION

1. BODY HARNESS

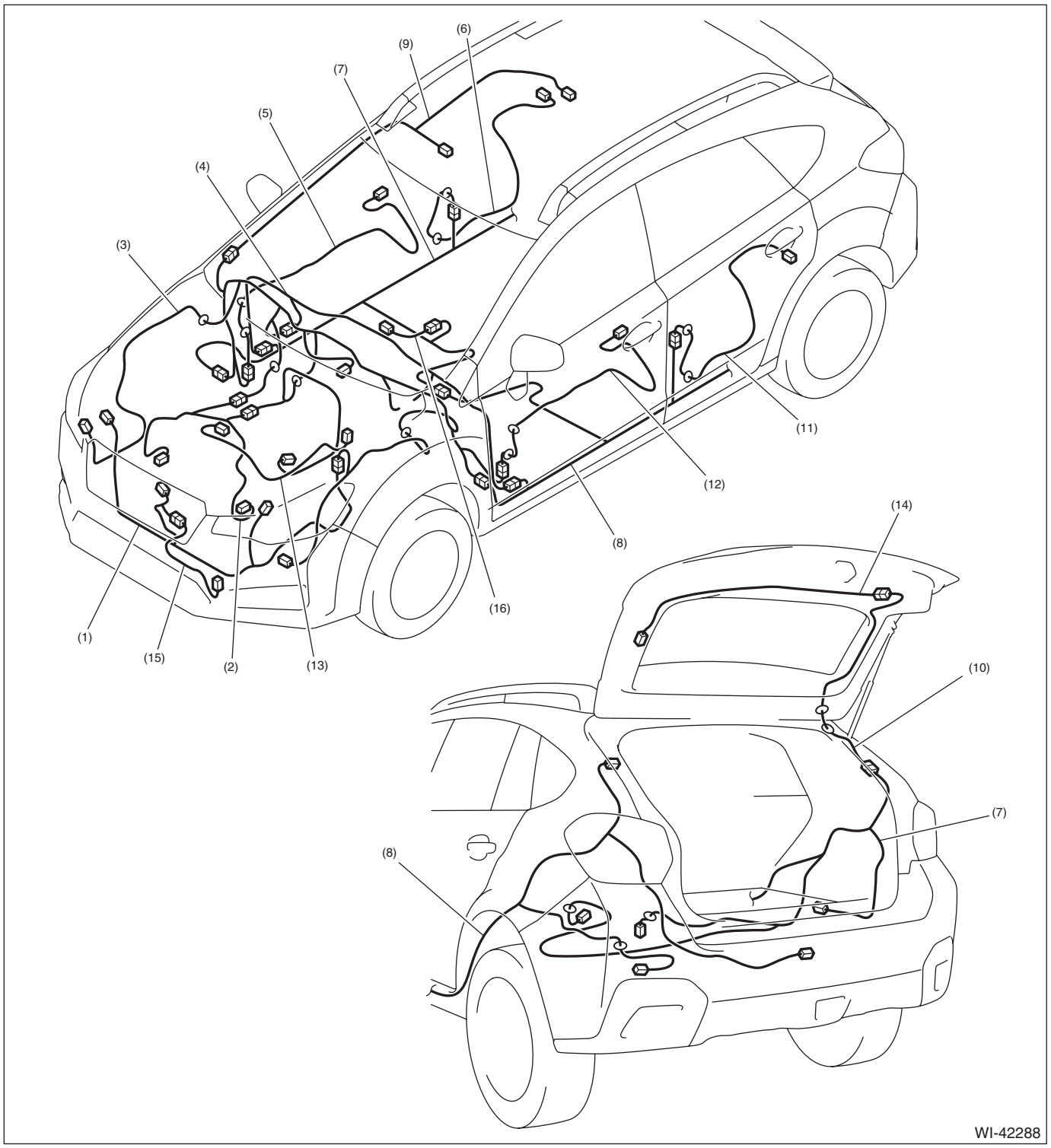

(1) Front wiring harness
(2) Engine wiring harness
(3) Bulkhead wiring harness
(4) Instrument panel wiring harness
(5) Front door cord RH
(6) Rear door cord RH
(7) Rear wiring harness RH
(8) Rear wiring harness LH
(9) Roof cord
(10) Rear gate cord (UPR)
(11) Rear door cord LH
(12) Front door cord LH
(13) Generator cord
(14) Rear gate cord (LWR)
(15) Active grille shutter adapter cord
(16) Occupant detection harness

2. HYBRID HARNESS

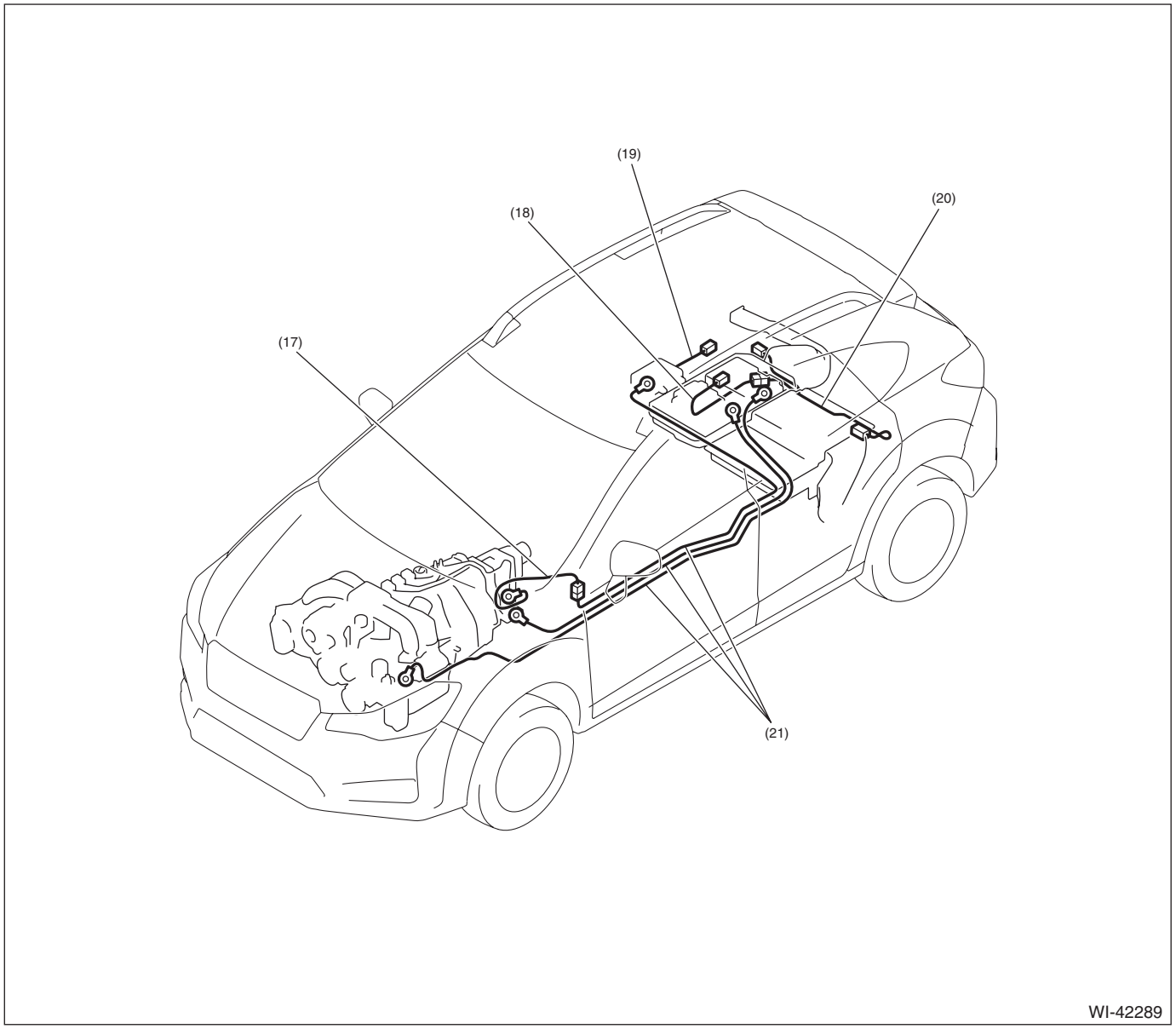

(17) Electric oil pump harness
(18) Inverter harness
(19) Inverter harness
(20) Inverter harness
(21) Power cable

60.Front Wiring Harness

A: LOCATION

Connector				Connecting to	
No.	Pole	Color	Area	No.	Description
F5	1	Black	C-1		Horn
F6	2	★	C-1		Front fog light RH
F16	2	★	C-2		Sub fan motor
F17	2	★	C-3		Main fan motor
F21	2	★	D-4		Front fog light LH
F24	1	★	C-3		Magnet clutch
F27	26	★	C-4		Relay holder
F35	12	Blue	C-4		M/B
F36	7	★	C-4		
F37	20	★	B-4		
F47	1	Black	C-2		Horn
F78	2	Black	D-3		Ambient sensor
F103	2	Gray	C-1		Daytime running light resistor
F108	18	Gray	C-4	B361	Through joint connector
F109	24	★	B-4	B360	
F125	8	Light gray	C-3		Front combination light LH
F126	8	Light gray	B-1		Front combination light RH
F134	2	Dark gray	B-3		Brake vacuum pump
F148	2	★	C-3		High beam LH
F149	2	★	B-1		High beam RH
F155	6	Black	C-2	F156	Active grille shutter adapter cord
F156	6	Black	C-2	F155	Front wiring harness
F157	4	Black	D-3		Active grille shutter
★: White or natural color					

Front Wiring Harness

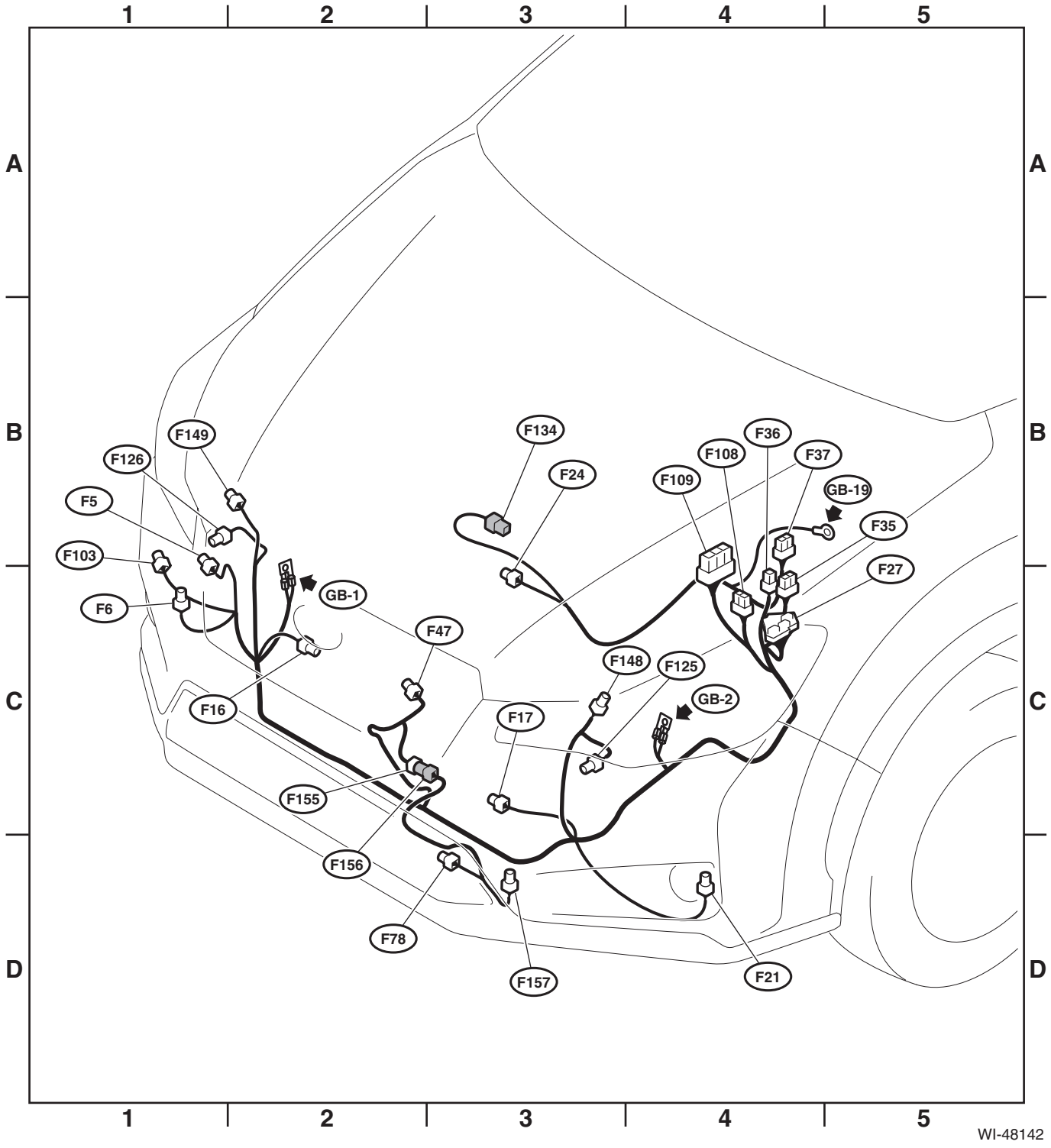

61.Bulkhead Wiring Harness (In Engine Compartment) RH

A: LOCATION

Connector				Connecting to	
No.	Pole	Color	Area	No.	Description
B3	5	Black	C-4		Mass air flow and intake air temperature sensor
B6	2	Light gray	C-3		Front ABS wheel speed sensor RH
B11	12	Light gray	C-4	T4	Transmission cord
B12	16	Brown	C-4	T3	
B14	1	Black	C-5		Starter motor
B21	54	Black	C-4	E2	Engine wiring harness
B22	16	Brown	C-3	E3	
B164	2	Black	D-1		Keyless buzzer
B177	2	Gray	B-4		Wiper deicer
B310	38	★	B-2		VDC CM
B321	2	Black	C-2		Hood switch
B450	10	Black	C-3		Power steering CM
B451	6	Gray	C-3		Torque sensor
B452	2	Black	B-3		Power steering CM
B597	2	Light gray	D-1		Pedestrian alert speaker
B598	2	Black	C-2		12V engine restart battery sensor
B599	4	Black	C-2		12V battery relay
B603	20	Gray	C-4	T32	Transmission cord
B609	1	Gray	C-2	B610	Generator cord
B610	1	Gray	C-2	B609	Bulkhead wiring harness
★: White or natural color					

Connector				Connecting to	
No.	Pole	Color	Area	No.	Description
AB16	2	Yellow	D-1		Front sub sensor RH

Bulkhead Wiring Harness (In Engine Compartment) RH

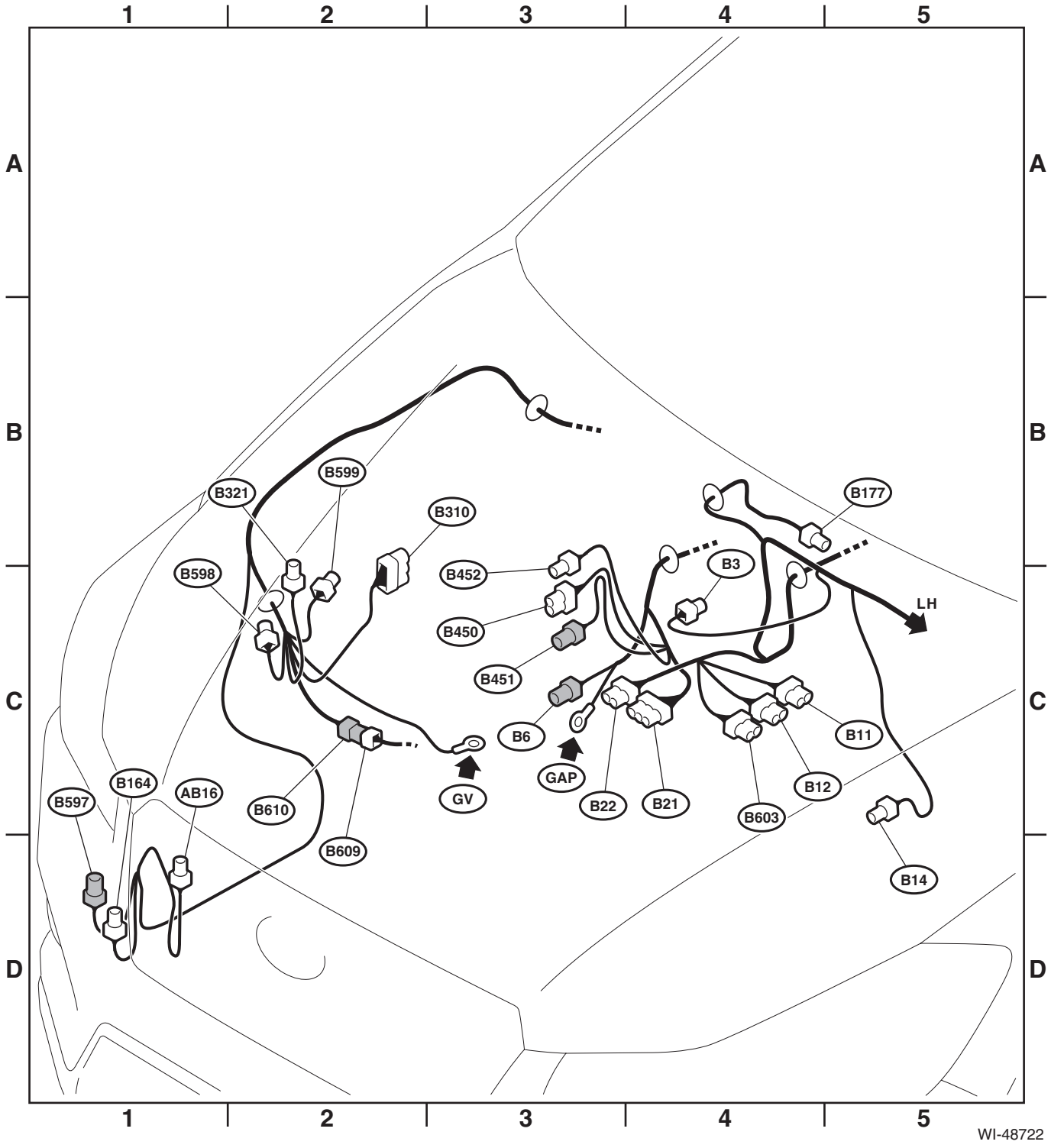

62.Bulkhead Wiring Harness (In Engine Compartment) LH

A: LOCATION

Connector				Connecting to	
No.	Pole	Color	Area	No.	Description
B8	5	Light gray	B-4		Front wiper motor
B10	4	Light gray	C-3		Pressure switch
B15	2	Light gray	B-3		Front ABS wheel speed sensor LH
B16	2	Gray	B-3		Brake fluid level switch
B143	20	★	B-3		M/B
B144	9	Brown	B-2		
B145	7	Brown	B-3		
B146	2	Black	D-3		Front washer motor
B147	2	Gray	D-3		Rear washer motor
B186	8	★	B-3		M/B
B360	16	Gray	B-3	F109	Through joint connector
B361	14	Gray	B-3	F108	
B396	2	Brown	D-2		Washer fluid level sensor
B523	2	Light gray	C-3		Battery temperature sensor
B564	21	Black	B-3		Relay holder
B565	3	Black	B-3		Brake booster pressure sensor 1
B571	2	★	B-3		M/B
B600	3	Black	B-3		Brake booster pressure sensor 2
★: White or natural color					

Connector				Connecting to	
No.	Pole	Color	Area	No.	Description
AB13	2	Yellow	C-1		Front sub sensor LH

Bulkhead Wiring Harness (In Engine Compartment) LH

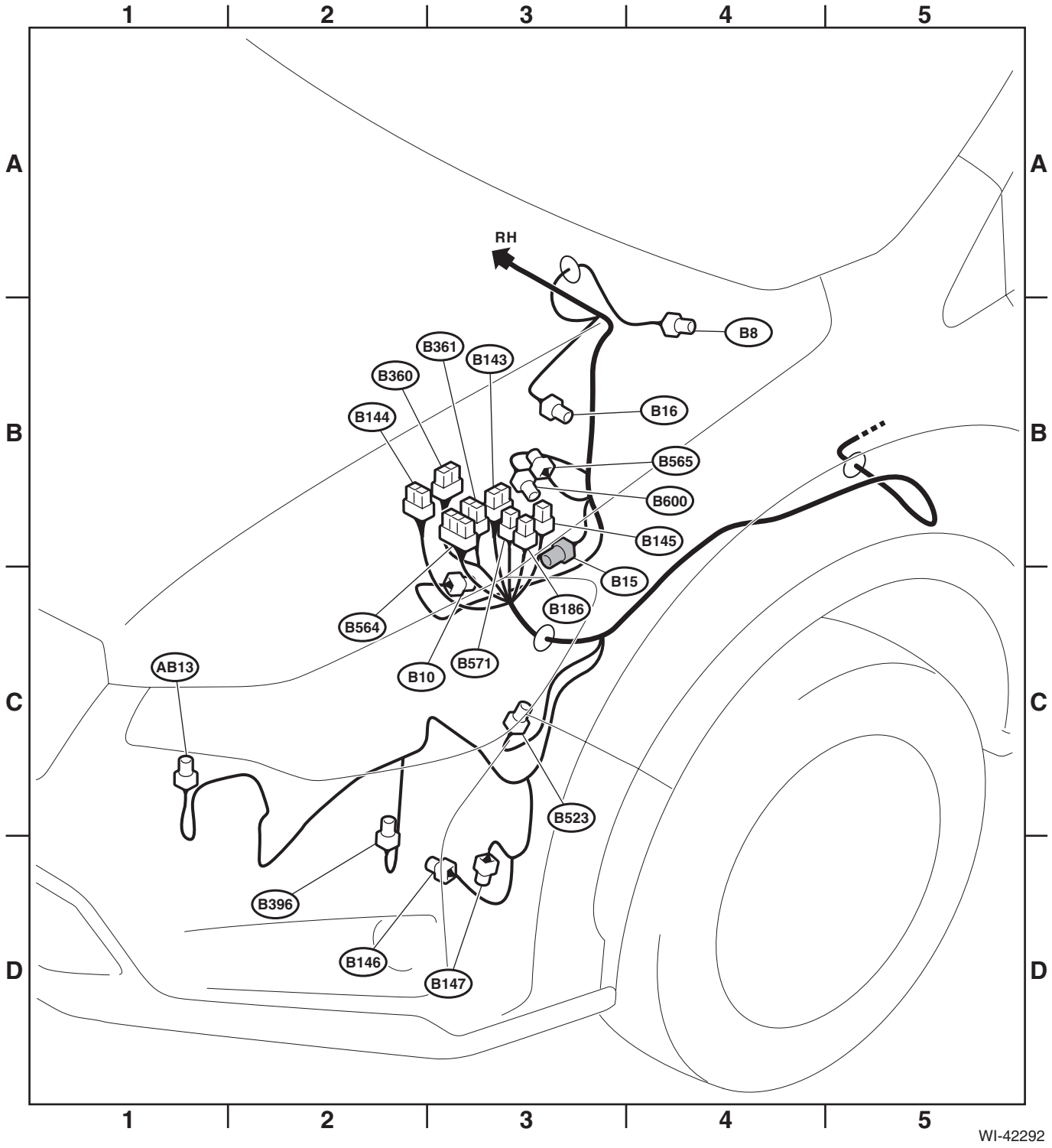

63.Bulkhead Wiring Harness (In Compartment) RH

A: LOCATION

Connector				Connecting to	
No.	Pole	Color	Area	No.	Description
B30	8	Black	C-5	D1	Front door cord RH
B57	4	★	B-2		Power transistor
B83	6	★	B-3		J/C
B87	2	★	B-4		Blower motor
B88	2	Brown	B-2		Evaporator sensor
B90	20	★	A-5	R50	Roof cord
B97	20	★	C-5	R1	Rear wiring harness RH
B98	20	★	C-5	R2	
B116	8	★	D-2		AT select lever
B122	6	★	B-3		J/C
B134	34	★	B-3		ECM
B135	35	★	B-3		
B136	35	★	B-3		
B137	31	★	B-2		
B163	6	Black	B-4		Intake door actuator
B220	44	★	B-3		Relay holder
B239	6	★	B-2		Air mix door actuator (without left/right independent air conditioner)
					Air mix door actuator RH (with left/right independent air conditioner)
B358	2	★	D-2		AT select lever illumination
B386	4	★	B-4		Blower motor relay
B554	2	★	C-2		Heater core sensor
B556	2	★	D-2	AB65	Airbag wiring harness
B579	2	★	D-2		Keyless access interior antenna (front)
B583	12	★	C-3	i237	Instrument panel wiring harness RH
B584	20	★	C-3	i238	
B604	6	★	B-2		J/C
B605	26	★	B-2		HPCM
B606	24	★	B-2		HPCM
B608	5	Gray	C-2		Output clutch relay
★: White or natural color					

Connector				Connecting to	
No.	Pole	Color	Area	No.	Description
AB6	30	Yellow	D-2		Airbag CM
AB9	4	Yellow	D-2		Passenger's airbag module
AB65	2	★	D-2	B556	Bulkhead wiring harness
★: White or natural color					

Bulkhead Wiring Harness (In Compartment) RH

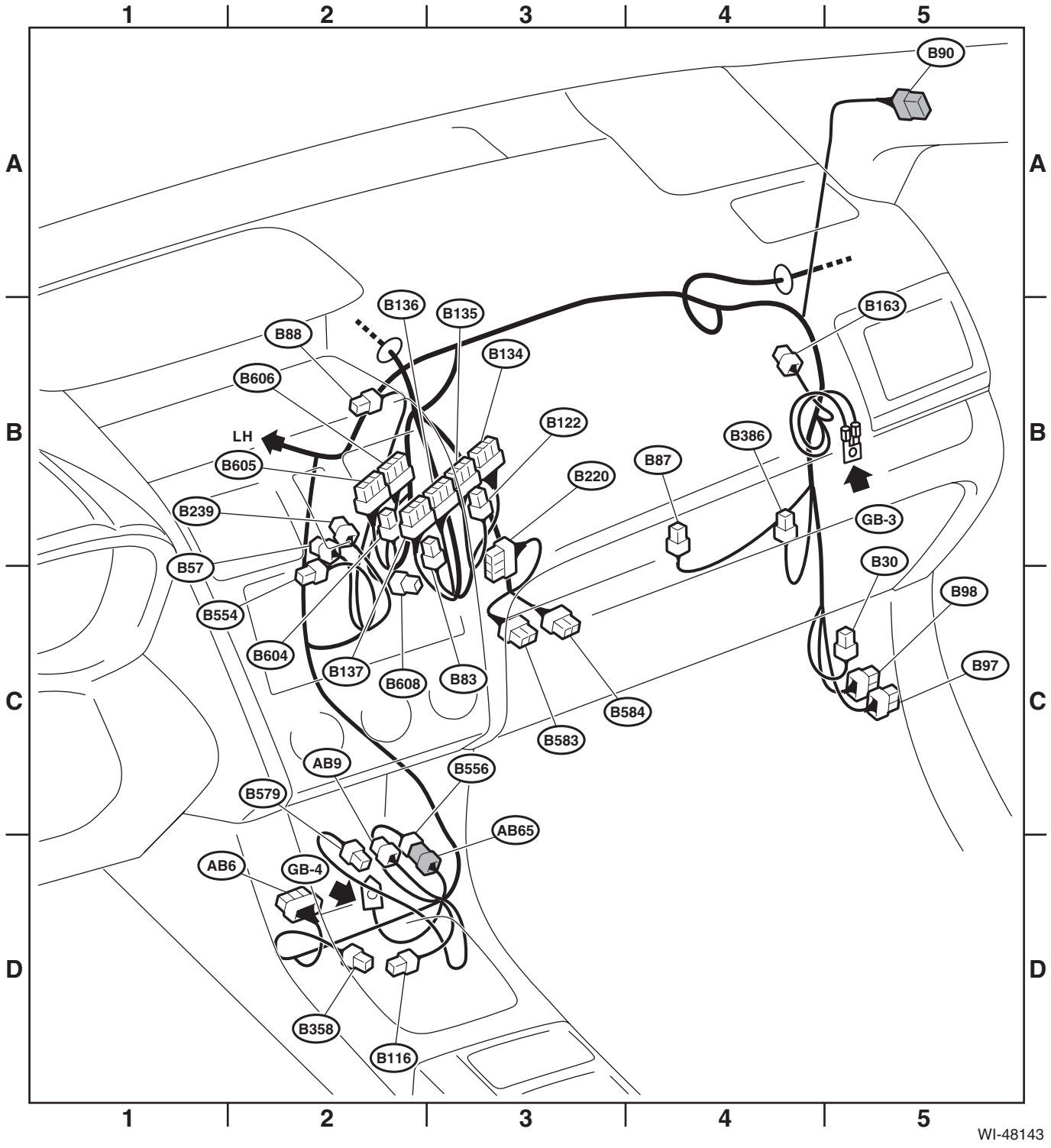

64.Bulkhead Wiring Harness (In Compartment) LH

A: LOCATION

Connector				Connecting to	
No.	Pole	Color	Area	No.	Description
B31	10	Gray	D-1	AB1	Airbag wiring harness
B32	8	★	B-3		Turn signal and hazard unit
B40	16	Black	C-1		Data link connector
B41	2	★	C-1		Power window circuit breaker
B52	24	★	C-2		F/B
B54	26	Green	B-2		TCM
B55	22	Green	B-2		
B65	4	Black	B-2		Stop light and brake switch
B68	14	★	C-4		Roll connector
B70	10	★	B-4		Combination switch
B71	20	★	C-4		
B72	8	★	B-3		Ignition switch
B77	6	★	B-4		Mode door actuator
B92	20	★	D-1	R5	Rear wiring harness
B99	20	★	D-1	R3	Rear wiring harness LH
B101	8	Black	C-1	D11	Front door cord LH
B123	2	Black	D-1	B124	Key lock
B124	2	Black	C-1	B123	
B150	24	★	B-2		Auto headlight beam leveler CM
B152	10	Gray	C-2		F/B
B158	8	★	C-2		
B159	9	Brown	C-2		
B162	2	★	C-2		
B180	4	★	B-3		Remote engine start CM (without push button start)
	8	★	B-3		Remote engine start CM (with push button start)
B181	2	★	B-2	B182	Bulkhead wiring harness
B182	2	★	B-2	B181	
B225	44	★	B-1		Relay holder
B231	5	★	B-4		Steering angle sensor
B235	6	★	B-3		Air mix door actuator LH (with left/right independent air conditioner)
B280	34	★	B-1		Body integrated unit
B281	35	★	B-1		
B315	6	Black	B-3		Accelerator pedal position sensor
B367	8	★	C-2		Impact sensor
B415	7	Black	C-3		Immobilizer antenna
B422	5	★	A-5		ID code box
B424	7	Black	C-3		Steering lock CM
B426	4	Black	B-2		Accessory relay (with push button start)
B475	4	★	C-2		Wiper relay unit
B550	20	★	C-2		Fuse holder
B551	12	★	B-3	i229	Instrument panel wiring harness LH
B552	17	★	C-3	i230	
B553	20	★	C-3	i231	
B555	2	★	B-4		Key warning switch
B557	2	★	C-3		Key lock solenoid

Bulkhead Wiring Harness (In Compartment) LH

Connector				Connecting to	
No.	Pole	Color	Area	No.	Description
B558	7	★	B-4		Combination switch
B559	5	★	A-5		Security CM
B572	18	★	C-2		Keyless access CM
B573	28	★	B-2		
B574	30	★	B-2		
B575	22	★	B-1	B576	Bulkhead wiring harness
B576	22	★	B-1	B575	
B577	10	★	B-1	B578	
B578	10	★	B-1	B577	
B601	4	Black	B-2		Brake stroke sensor
B602	22	Black	B-2		Fuse holder
B607	14	Blue	C-1		J/C
★: White or natural color					

Connector				Connecting to	
No.	Pole	Color	Area	No.	Description
AB1	10	Gray	D-1	B31	Bulkhead wiring harness
AB2	4	Yellow	C-4	AB7	Driver's airbag module
AB66	2	Black	C-3		Driver's knee airbag module

Bulkhead Wiring Harness (In Compartment) LH

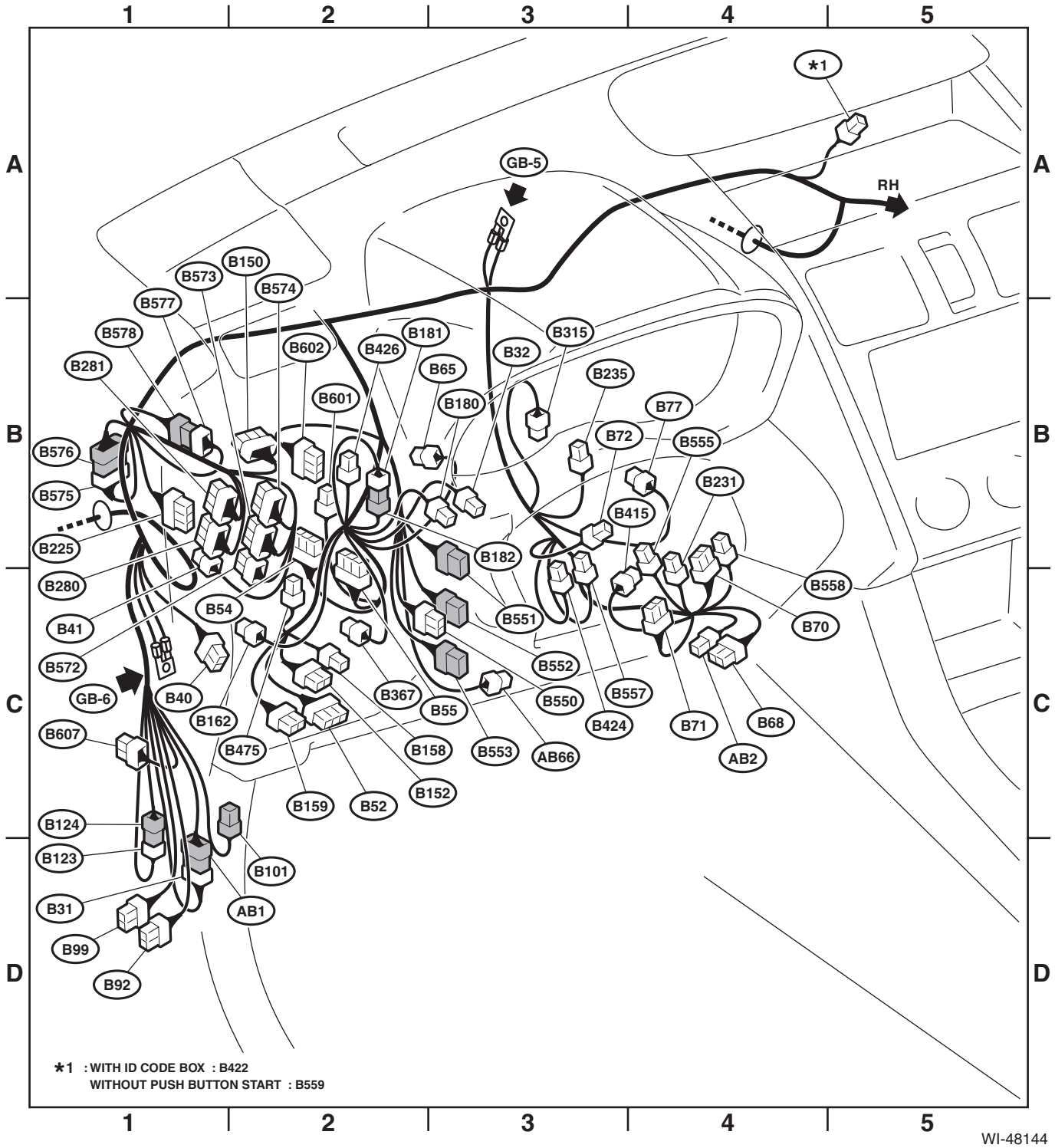

65.Engine Wiring Harness and Transmission Cord

A: LOCATION

Connector				Connecting to	
No.	Pole	Color	Area	No.	Description
E2	54	Black	A-3	B21	Bulkhead wiring harness
E3	16	Brown	A-4	B22	
E4	2	Blue	A-3		Purge control solenoid valve
E5	2	Dark gray	B-2		Fuel injector No. 1
E6	2	Dark gray	A-2		Fuel injector No. 3
E8	2	Black	A-3		Engine coolant temperature sensor
E10	3	Black	B-4		Crankshaft position sensor
E11	1	—	B-3		Oil pressure switch
E14	2	Black	B-4		Knock sensor
E16	2	Dark gray	B-4		Fuel injector No. 2
E17	2	Dark gray	B-4		Fuel injector No. 4
E18	6	Dark gray	A-3		EGR control valve
E21	3	Black	A-3		Manifold absolute pressure sensor
E24	4	Light gray	B-2		Front oxygen (A/F) sensor
E25	4	Black	B-2		Rear oxygen sensor
E31	3	Black	B-2		Ignition coil No. 1
E32	3	Black	C-4		Ignition coil No. 2
E33	3	Black	A-2		Ignition coil No. 3
E34	3	Black	B-4		Ignition coil No. 4
E35	3	Light gray	C-4		Intake camshaft position sensor LH
E36	3	Light gray	B-1		Intake camshaft position sensor RH
E37	2	Black	C-4		Intake oil control solenoid LH
E38	2	Black	B-1		Intake oil control solenoid RH
E51	5	Light gray	B-4		Tumble generator valve actuator LH
E55	5	Light gray	A-3		Tumble generator valve actuator RH
E57	6	Black	B-4		Electronic throttle control
E62	3	Light gray	B-2		Exhaust camshaft position sensor RH
E63	2	Black	B-1		Exhaust oil control solenoid RH
E65	3	Light gray	C-4		Exhaust camshaft position sensor LH
E66	2	Black	C-4		Exhaust oil control solenoid LH
E75	2	Black	B-3		Engine oil temperature sensor
E130	1	★	C-3		Oil level switch
E163	5	Black	A-3		ISG
★: White or natural color					

Connector				Connecting to	
No.	Pole	Color	Area	No.	Description
T3	16	Brown	C-3	B12	Bulkhead wiring harness
T4	12	Light gray	C-3	B11	
T7	9	Black	D-3		Inhibitor switch
T11	10	★	D-3		Control valve body
T32	20	Gray	C-2	B603	Bulkhead wiring harness
T33	3	Black	D-3		Front wheel speed sensor
AT4	3	Dark gray	D-4		Secondary speed sensor
AT5	3	Light gray	D-3		Turbine speed sensor
AT6	3	Black	D-4		Secondary pressure sensor

Connector				Connecting to	
No.	Pole	Color	Area	No.	Description
HV1	—	—	D-4		Drive motor
HV11	3	Orange	D-4	HV12	Electric oil pump harness
HV12	3	Orange	D-4	HV11	Power cable
★: White or natural color					

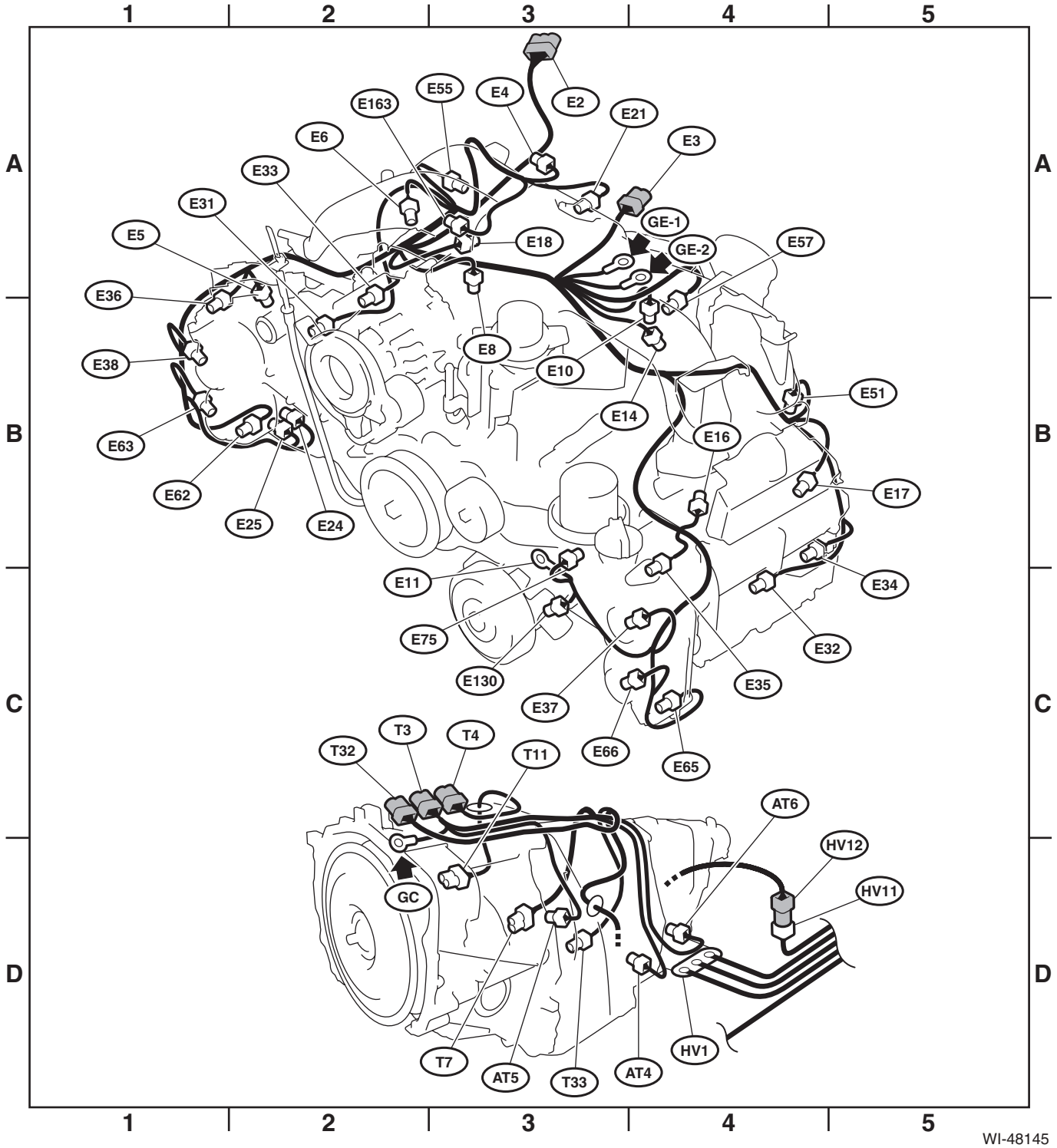

66.Instrument Panel Wiring Harness RH

A: LOCATION

Connector				Connecting to	
No.	Pole	Color	Area	No.	Description
i7	4	Gray	B-2		MFD switch
i22	4	★	B-2		Hazard switch
i23	2	★	B-4		Glove box light
i24	2	★	C-2		Front accessory power supply socket
i29	1	★	C-2		Audio bracket ground
i53	24	★	C-5	R98	Rear wiring harness RH
i76	28	★	B-5	D83	Front door cord RH
i85	10	★	C-2		Audio
	10	★	C-2		Navigation unit
i87	28	★	C-2		Navigation unit
i88	40	★	C-2		A/C control panel
i131	6	★	C-2		Audio
	6	★	C-2		Navigation unit
i146	5	★	B-2		Navigation unit
i159	4	★	A-4		Side tweeter RH
i168	4	★	B-3		J/C
i169	4	★	B-4		
i192	28	★	C-2		Audio
i195	10	★	C-5	R382	Rear wiring harness RH
i226	3	★	A-3		Light control sensor
i237	12	★	C-3	B583	Bulkhead wiring harness RH
i238	20	★	C-3	B584	
★ White or natural color					

Instrument Panel Wiring Harness RH

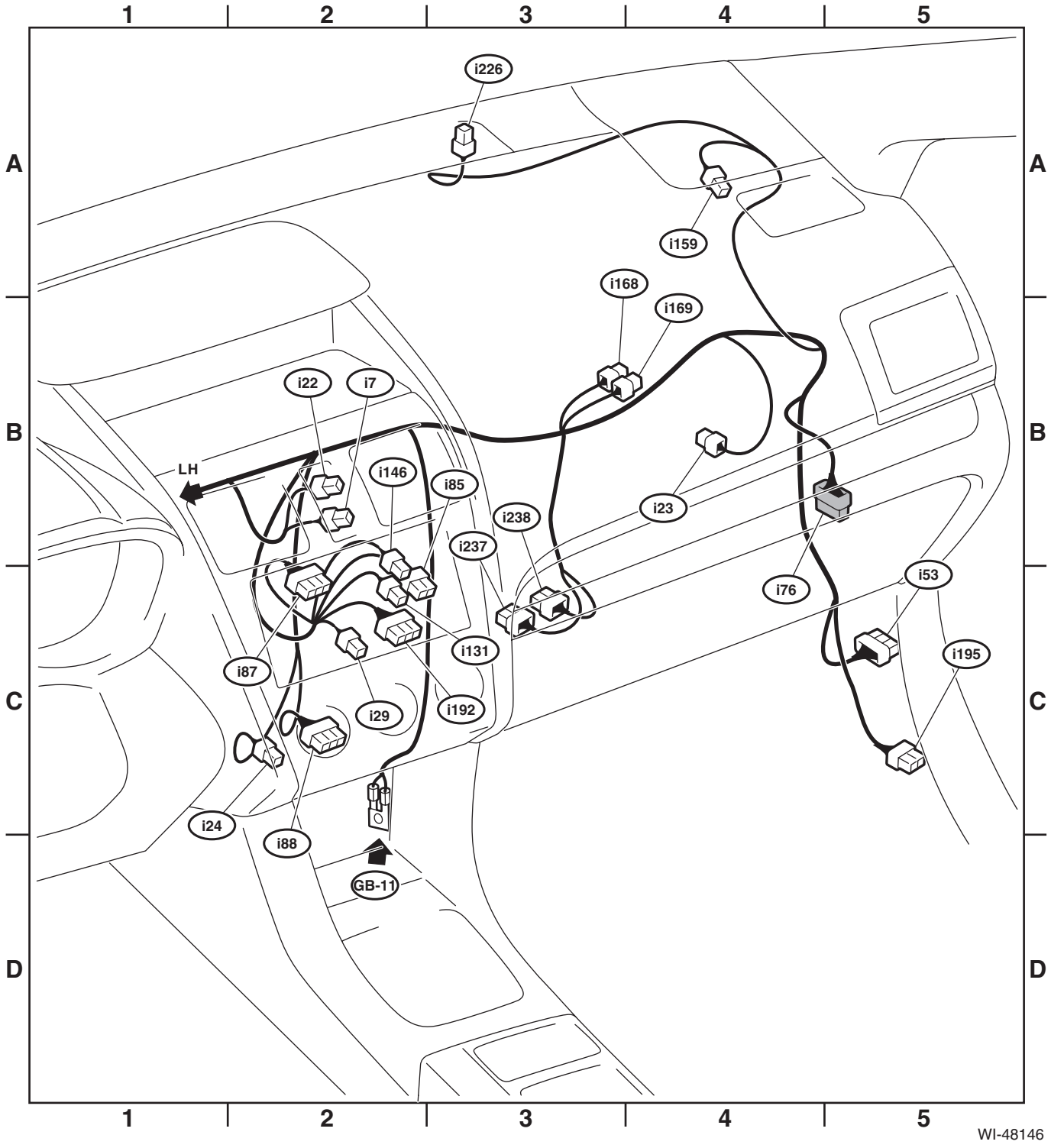

67.Instrument Panel Wiring Harness LH

A: LOCATION

Connector				Connecting to	
No.	Pole	Color	Area	No.	Description
i2	10	★	D-1	R339	Rear wiring harness LH
i5	20	★	C-2		F/B
i10	40	★	B-3		Combination meter
i51	2	★	A-4		Sunload sensor
i55	2	★	B-4		Temperature and humidity sensor
i79	6	★	C-2		Illumination control switch
i84	35	Black	B-1		Body integrated unit
i101	28	★	C-1	D84	Front door cord LH
i102	24	★	D-1	R167	Rear wiring harness LH
i122	12	Black	A-4		MFD
i150	14	★	B-4		Push button ignition switch (with push button start)
i158	4	★	B-1		Side tweeter LH
i166	4	★	B-2		J/C
i167	4	★	B-2		
i171	31	★	C-1		Body integrated unit
i229	12	★	C-2	B551	Bulkhead wiring harness LH
i230	17	★	C-2	B552	
i231	20	★	C-2	B553	
i232	8	★	B-3		J/C
i233	8	★	B-4		
i234	4	★	C-2		VDC OFF switch
i264	12	★	C-5		Pedestrian alert CM
★ White or natural color					

Instrument Panel Wiring Harness LH

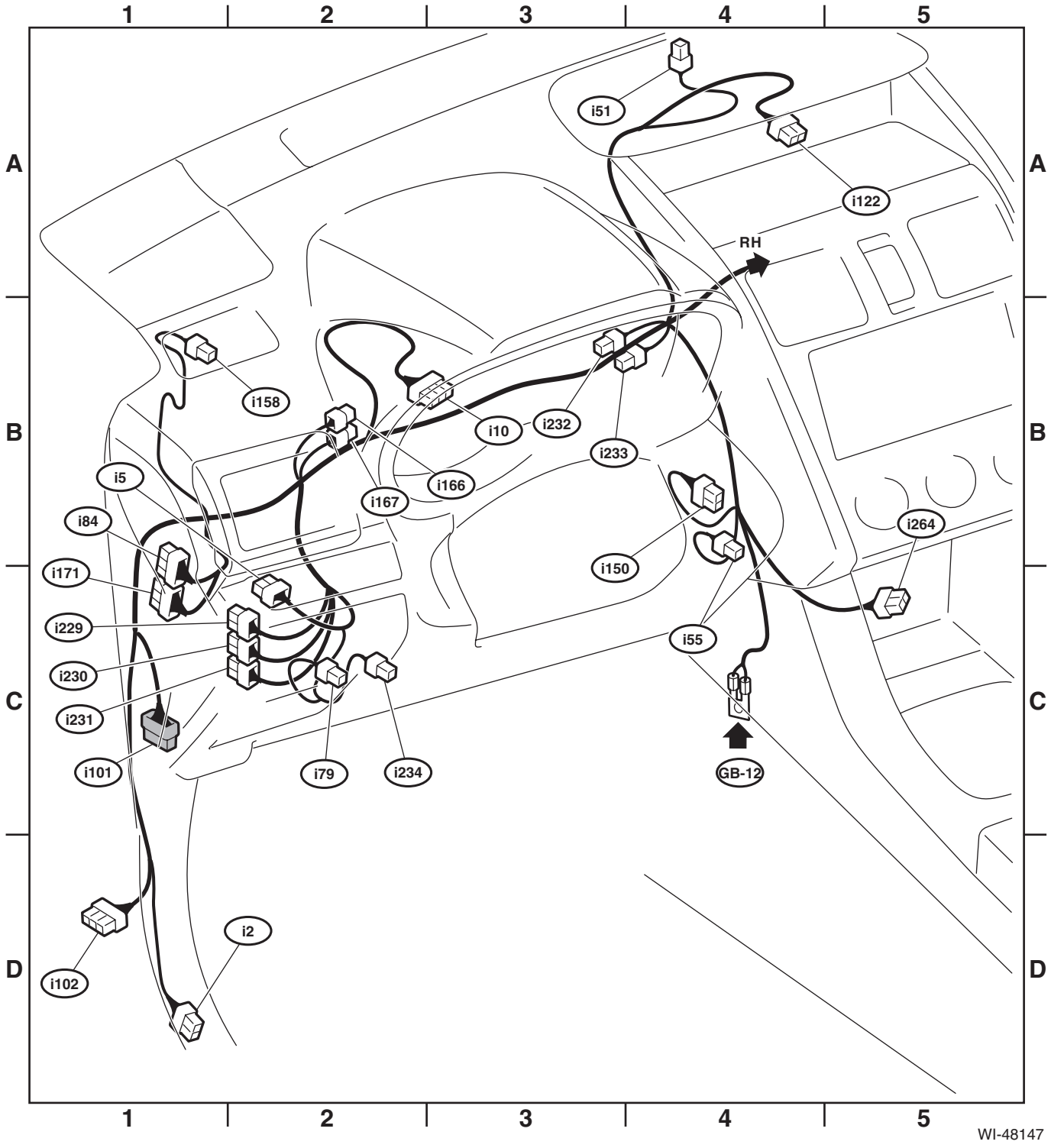

68.Roof Cord

A: LOCATION

Connector				Connecting to	
No.	Pole	Color	Area	No.	Description
R50	20	★	B-1	B90	Bulkhead wiring harness
R52	3	★	A-5		Room light
R55	8	★	B-4		Sunroof motor assembly
R56	2	★	B-4		Spot map light (with sunroof)
	6	★	B-4		Spot map light (without sunroof)
R62	6	★	B-4		Spot map light (with sunroof)
R64	3	★	B-3		Spot map light diode (with sunroof)
R128	5	★	B-4		Sunroof switch
R139	3	★	B-4		Rear view mirror
R187	5	Black	B-4		Sunroof switch (tilt)
★: White or natural color					

Roof Cord

69.Rear Wiring Harness RH

A: LOCATION

Connector				Connecting to	
No.	Pole	Color	Area	No.	Description
R1	20	★	C-1	B97	Bulkhead wiring harness
R2	20	★	C-2	B98	
R12	3	★	B-3		Front door switch RH
R13	8	★	B-3	D28	Rear door cord RH
R32	2	★	C-5		Rear accessory power supply socket
R43	8	★	C-4		Seat heater switch
R44	4	★	C-3		Seat heater RH
R82	19	Black	C-3	R81	Rear wiring harness LH
R98	24	★	C-1	i53	Instrument panel wiring harness
R124	2	Yellow	C-1	AB63	Front door cord RH
R284	8	★	C-5		AUX input terminal
R382	10	★	C-2	i195	Instrument panel wiring harness
★: White or natural color					

Connector				Connecting to	
No.	Pole	Color	Area	No.	Description
AB18	24	Yellow	D-3		Airbag CM
AB24	4	Yellow	C-3		Side airbag module RH
AB26	2	Black	B-3		Pretensioner RH
AB28	4	Yellow	B-3		Side airbag sensor RH
AB30	2	Yellow	B-3		Lap seat belt pretensioner RH
AB53	3	Dark gray	C-4	AB59	Occupant detection harness
AB59	3	★	C-3	AB53	Rear wiring harness
AB60	2	Yellow	C-3		Buckle switch
AB61	10	Black	C-3		Occupant detection control module
★: White or natural color					

Rear Wiring Harness RH

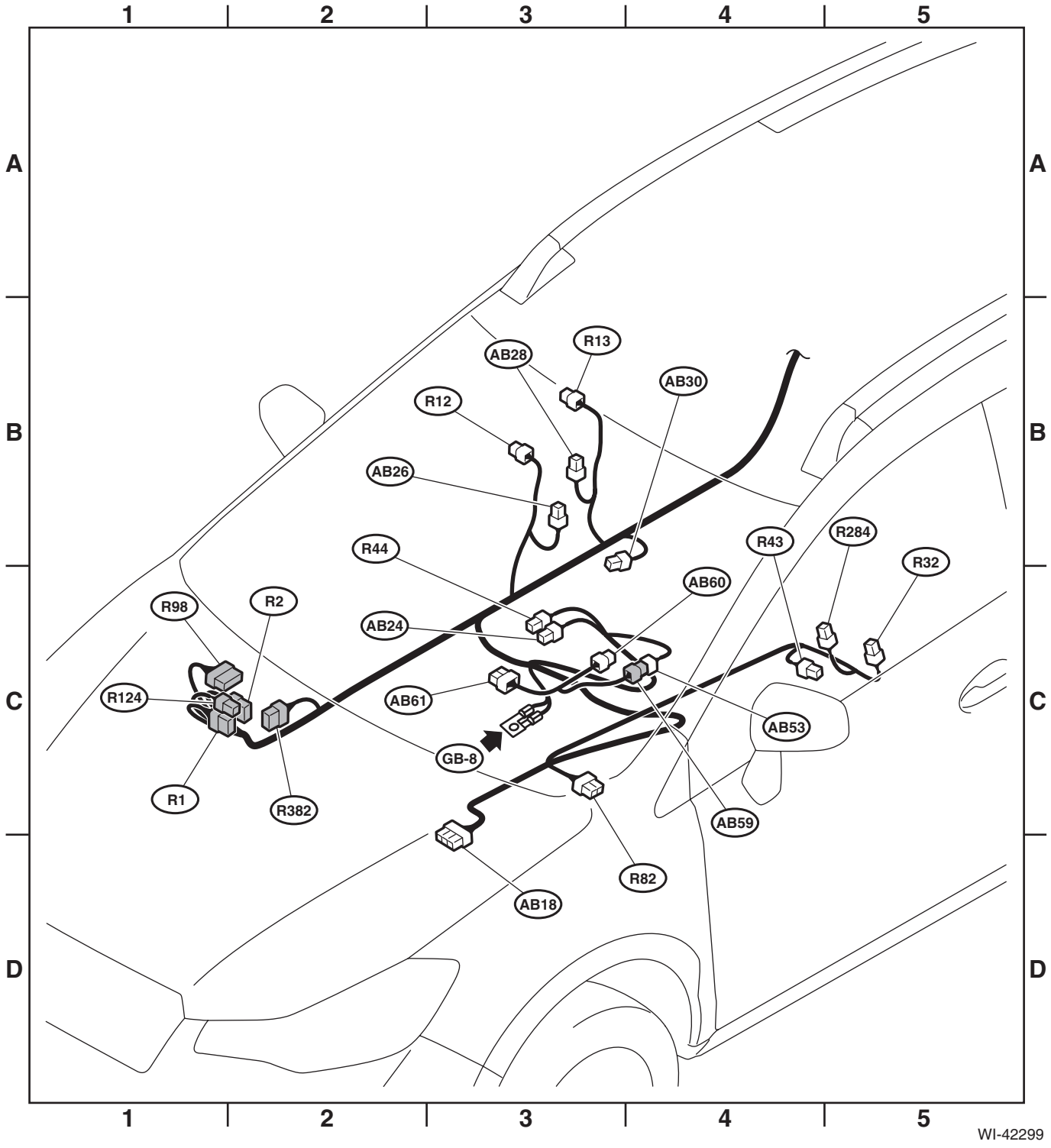

70.Rear Wiring Harness LH

A: LOCATION

Connector				Connecting to	
No.	Pole	Color	Area	No.	Description
R3	20	★	D-2	B99	Bulkhead wiring harness
R4	1	Black	C-2		Parking brake switch
R5	20	★	D-2	B92	Bulkhead wiring harness
R9	3	★	C-4		Front door switch LH
R10	8	★	C-4	D22	Rear door cord LH
R41	4	★	C-3		Seat heater LH
R81	19	Black	C-2	R82	Rear wiring harness RH
R107	2	★	C-3		Seat belt switch LH
R123	2	Yellow	D-2	AB62	Front door cord LH
R167	24	★	D-2	i102	Instrument panel wiring harness
R168	20	★	C-2		F/B
R339	10	★	D-3	i2	Instrument panel wiring harness
★: White or natural color					

Connector				Connecting to	
No.	Pole	Color	Area	No.	Description
AB17	24	Yellow	D-1		Airbag CM
AB19	4	Yellow	C-3		Side airbag module LH
AB21	2	Black	C-4		Pretensioner LH
AB23	4	Yellow	C-4		Side airbag sensor LH
AB35	2	Black	C-2		F/B

Rear Wiring Harness LH

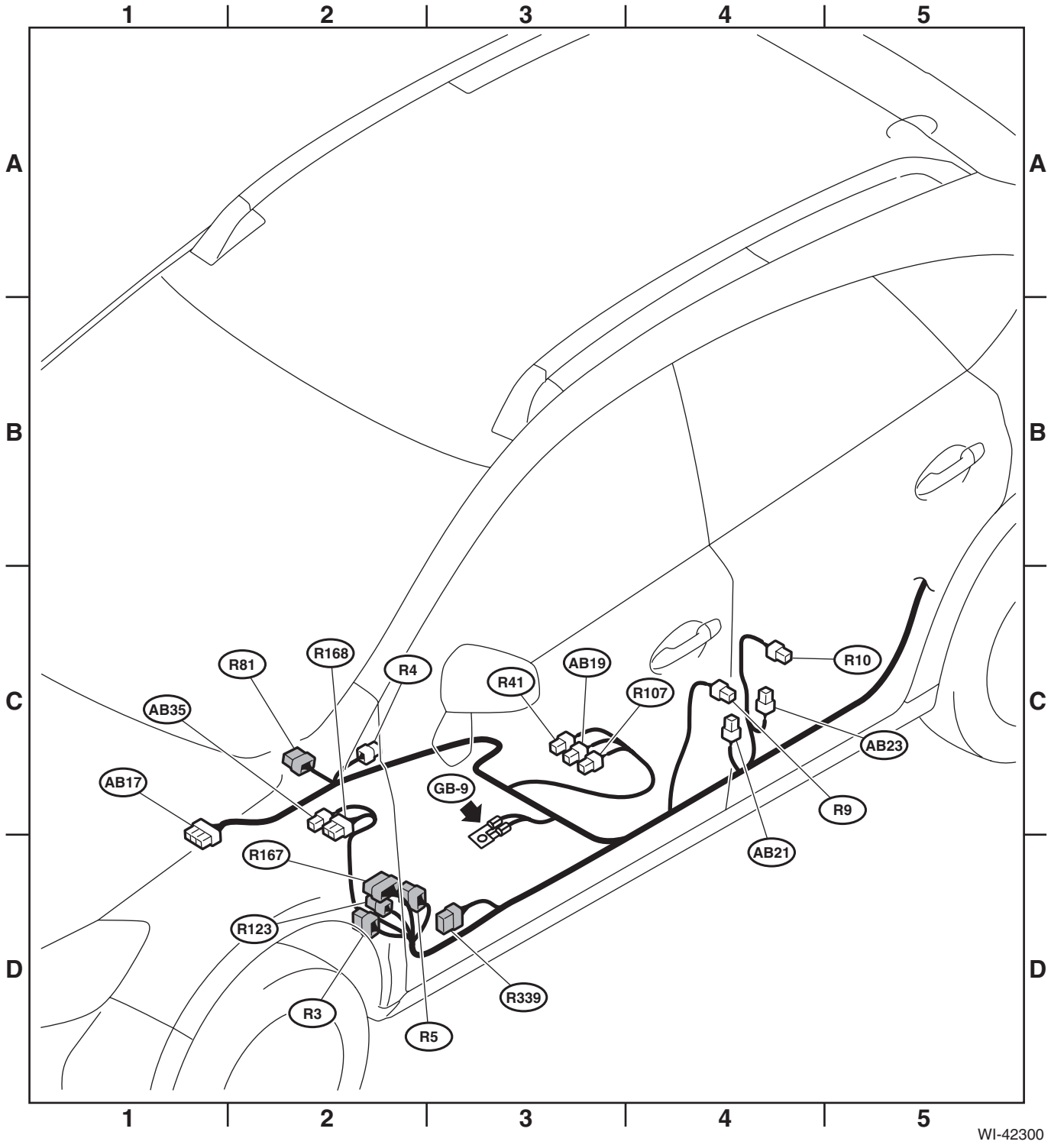

71.Rear Wiring Harness (HEV)

A: LOCATION

Connector				Connecting to	
No.	Pole	Color	Area	No.	Description
R432	12	Gray	C-4		Drive motor inverter
R433	4	Black	C-3		DC/DC converter
R434	8	Black	C-3		Drive motor inverter amperage sensor
R435	19	Black	C-3	R437	Inverter harness
R436	8	★	C-3	R454	Rear wiring harness
R437	19	Black	C-3	R435	Inverter harness
R438	4	★	C-3		High voltage battery cooling fan
R439	3	★	C-2		Keyless access interior antenna (rear)
R440	12	★	C-2		Relay holder
R441	10	Blue	C-2		J/C
R442	22	Green	C-2		DMCM
R443	26	Green	C-2		
R444	14	★	C-2	R459	Rear wiring harness
R445	8	★	B-2		High voltage battery
R446	4	★	C-4	R455	Rear wiring harness
★: White or natural color					

Connector				Connecting to	
No.	Pole	Color	Area	No.	Description
HV2	—	—	C-3		Drive motor inverter
HV3	—	—	C-3		
HV4	—	—	C-3		Drive motor inverter amperage sensor
HV5	—	—	C-4		Drive motor inverter
HV6	—	—	C-4		Electric noise filter
HV7	—	—	B-4		
HV8	—	—	B-3		High voltage battery
HV9	—	—	C-4		Electric oil pump inverter
HV10	—	—	C-4		

Rear Wiring Harness (HEV)

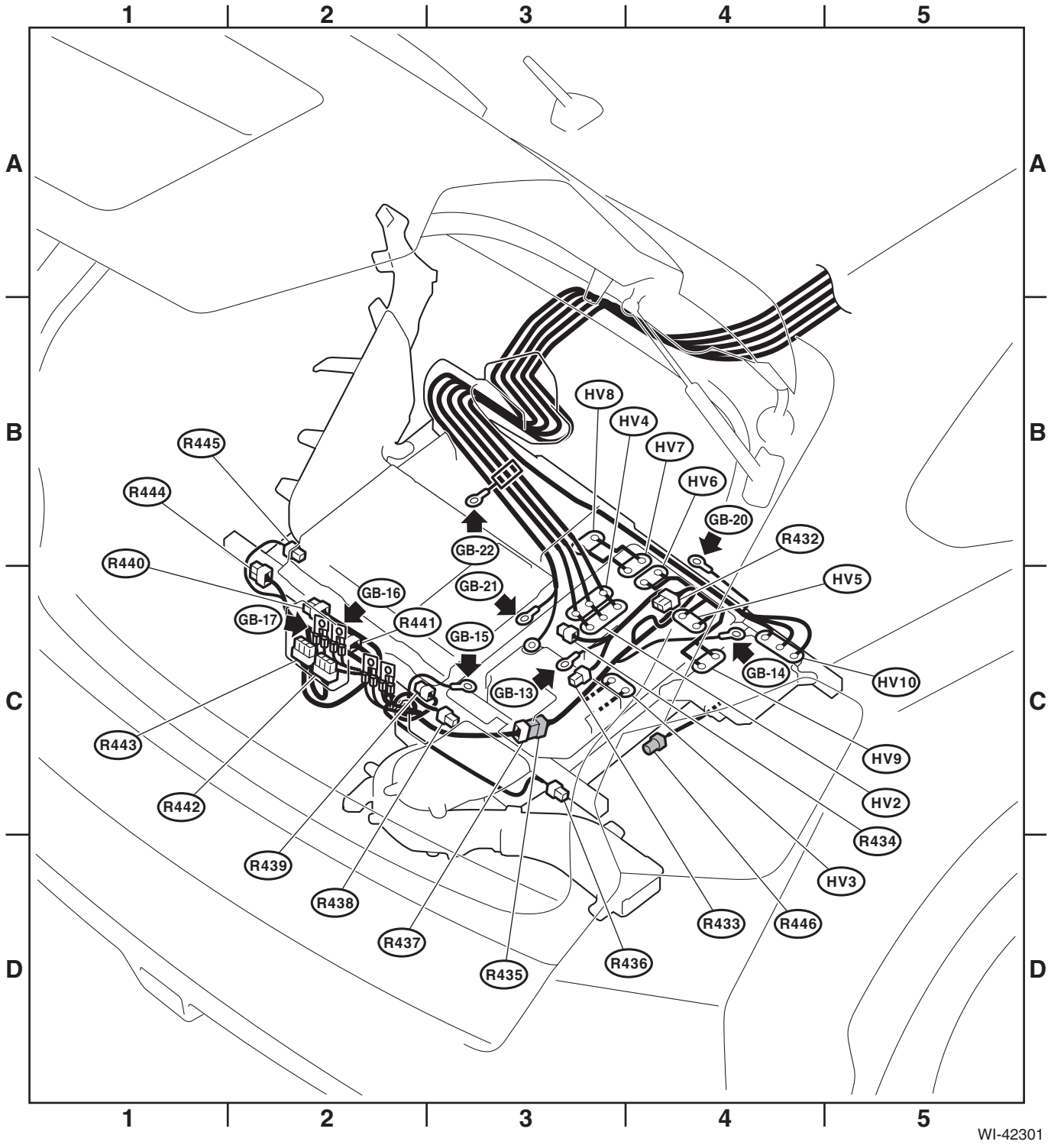

72.Door Cord RH

A: LOCATION

Connector				Connecting to	
No.	Pole	Color	Area	No.	Description
D1	8	Black	C-2	B30	Bulkhead wiring harness
D12	2	★	C-2		Front door speaker RH
D13	6	Dark gray	C-2		Front power window motor RH
D15	10	★	B-2		Outer mirror assembly RH
D17	8	★	B-2		Front power window sub-switch
D18	10	★	B-3		Front door lock actuator RH
D28	8	★	B-4	R13	Rear wiring harness RH
D29	2	★	B-4		Rear door speaker RH
D30	6	Dark gray	B-4		Rear power window motor RH
D31	8	★	B-4		Rear power window sub-switch RH
D32	10	★	A-4		Rear door lock actuator RH
D56	6	★	B-3		Outer handle RH
D83	28	★	C-2	i76	Instrument panel wiring harness
D125	5	★	B-2		Passenger's seat door lock switch
★: White or natural color					

Connector				Connecting to	
No.	Pole	Color	Area	No.	Description
AB63	2	Yellow	C-1	R124	Rear wiring harness RH
AB64	2	Yellow	B-3		Front door impact sensor RH

Door Cord RH

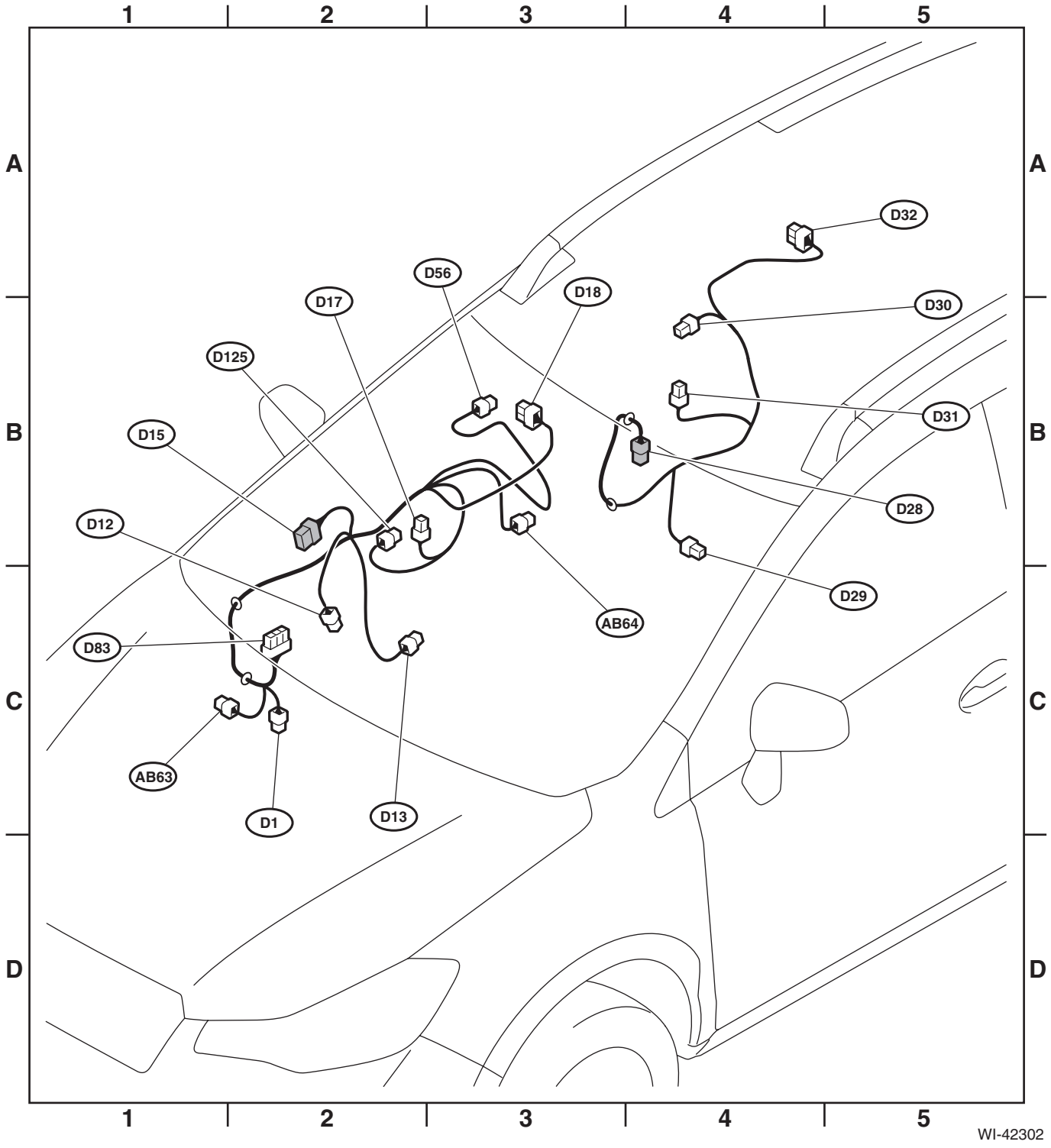
1
2
3
4
5
A
B
C
D
D32
D30
D31
D28
D29
D56
D18
D17
D125
D15
D12
D83
AB64
AB63
D1
D13
WI-42302

73.Door Cord LH

A: LOCATION

Connector				Connecting to	
No.	Pole	Color	Area	No.	Description
D2	2	★	D-3		Front door speaker LH
D3	6	Dark gray	D-3		Front power window motor LH
D5	10	★	C-3		Outer mirror assembly LH
D7	16	★	C-3		Power window main switch
D11	8	Black	D-2	B101	Bulkhead wiring harness
D22	8	★	C-4	R10	Rear wiring harness LH
D23	2	★	C-4		Rear door speaker LH
D24	6	Dark gray	B-5		Rear power window motor LH
D25	8	★	C-4		Rear power window sub-switch LH
D26	10	★	B-5		Rear door lock actuator LH
D66	6	★	C-4		Outer handle LH
D72	10	★	C-4		Front door lock actuator LH
D84	28	★	D-2	i101	Instrument panel wiring harness
D102	3	★	C-3		Power window main switch
D149	16	★	C-3		Remote control mirror switch
★: White or natural color					

Connector				Connecting to	
No.	Pole	Color	Area	No.	Description
AB58	2	Yellow	C-4		Front door impact sensor LH
AB62	2	Yellow	D-2	R123	Rear wiring harness LH

Door Cord LH

1
2
3
4
5
A
B
C
D
D26
D24
D25
D22
D72
D66
D5
D2
D84
AB62
D11
D149
D3
D102
D7
AB58
D23
WI-42303

74.Rear Wiring Harness and Rear Gate Cord

A: LOCATION

Connector				Connecting to	
No.	Pole	Color	Area	No.	Description
R16	3	★	C-4		Rear door switch RH
R22	3	★	C-1		Rear door switch LH
R26	6	Gray	C-4		Rear combination light RH
R28	6	Gray	C-2		Rear combination light LH
R29	3	Black	C-2		Rear vehicle height sensor
R38	8	★	B-4	D34	Rear gate cord
R39	14	Gray	B-4	D35	
R58	4	Gray	C-2		Fuel pump assembly
R59	2	★	C-2		Fuel sub level sensor
R72	2	Light gray	C-3		Rear ABS wheel speed sensor RH
R73	2	Light gray	C-2		Rear ABS wheel speed sensor LH
R80	8	★	B-2		Keyless entry CM
R97	1	★	B-2		Antenna feeder cord
R141	2	Light gray	C-2		Luggage room light
R211	12	★	B-2		TPMS CM
R296	5	★	B-2		Receiver (with push button start)
R298	3	★	C-3		Keyless access interior antenna (center)
R299	6	★	C-4		Keyless access exterior antenna (rear)
R400	8	Gray	C-2		ELCM
R454	8	★	C-4	R436	Inverter harness
R455	4	★	C-4	R446	Electric oil pump inverter
R456	4	★	C-4		J/C
R457	4	★	C-4		
R459	14	★	C-2	R444	Inverter harness
★: White or natural color					

Connector				Connecting to	
No.	Pole	Color	Area	No.	Description
D34	8	★	B-4	R38	Rear wiring harness RH
D35	14	Gray	B-4	R39	
D39	2	★	B-3		High-mounted stop light
D43	4	★	A-4		Rear wiper motor
D44	2	★	A-4		License plate light RH
D46	4	★	A-4		Rear gate lock actuator & latch switch
D47	2	Brown	A-4		Rear gate opener button
D48	1	Black	B-2		Rear defogger
D77	4	★	A-4		Rear lock button & rear gate opener button
D80	8	★	A-4	D81	Rear gate cord
D81	8	★	A-4	D80	
D85	4	★	A-3		Rearview camera
D89	1	Black	B-4		Rear defogger
D137	2	★	A-4		License plate light LH
★: White or natural color					

Connector				Connecting to	
No.	Pole	Color	Area	No.	Description
AB31	2	Black	B-2		Curtain airbag module LH
AB32	4	Yellow	C-1		Curtain airbag sensor LH
AB33	2	Black	B-4		Curtain airbag module RH
AB34	4	Yellow	C-3		Curtain airbag sensor RH
AB41	2	Yellow	C-2		Satellite safing sensor

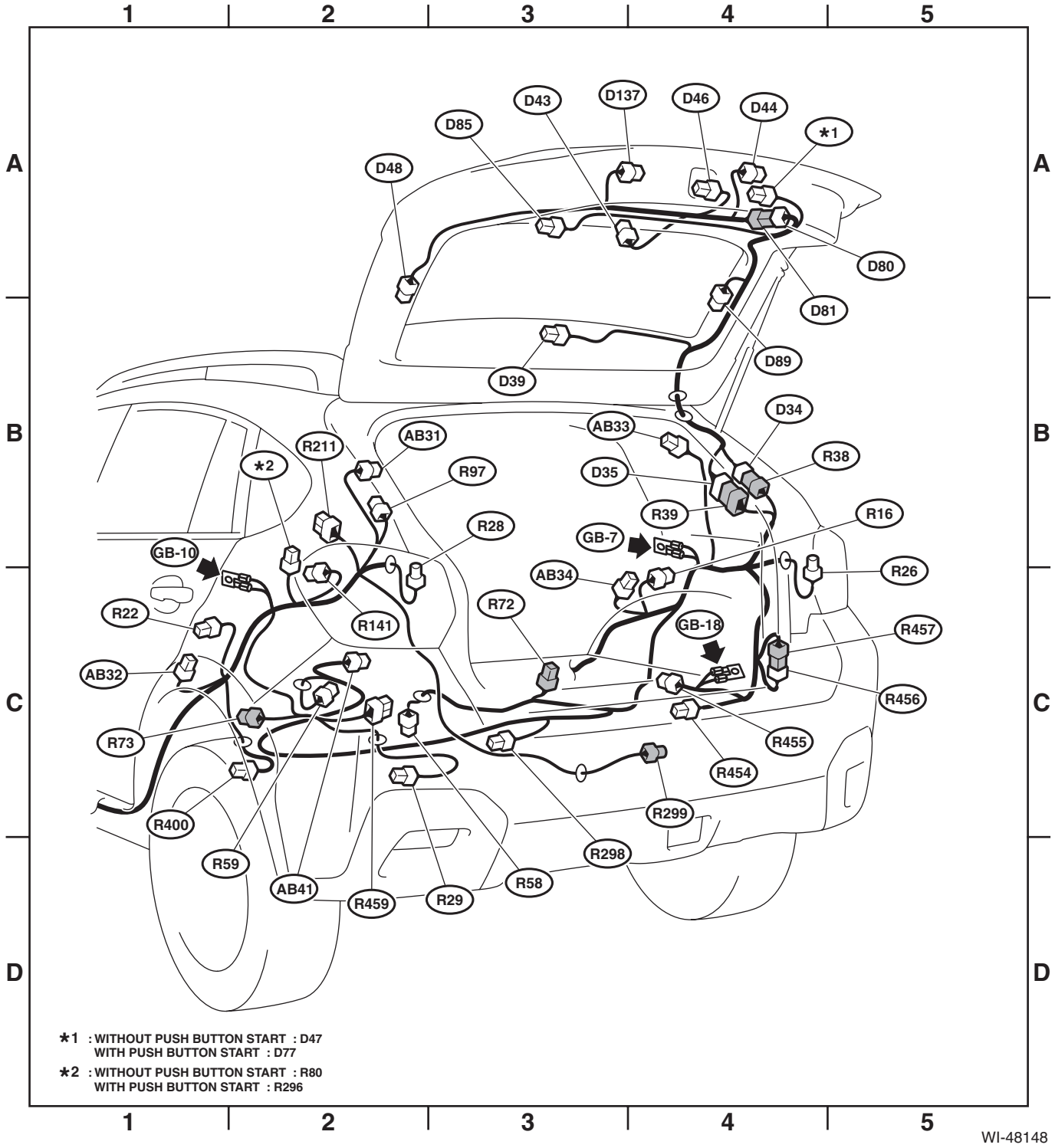

1. Basic Diagnostic Procedure

A: BASIC PROCEDURES

1. GENERAL DESCRIPTION

The most important purpose of diagnostics is to quickly determine which part is malfunctioning, to save time and labor.

2. IDENTIFICATION OF TROUBLE SYMPTOM

Determine what the problem is based on the symptom.

3. PROBABLE CAUSE OF TROUBLE

Look at the wiring diagram and check the system's circuit. Then check the switch, relay, fuse, ground, etc.

4. LOCATION AND REPAIR OF TROUBLE

1) Using the diagnostics, narrow down the causes.
2) If necessary, use a voltmeter, ohmmeter, etc.
3) Before replacing certain component parts (switch, relay, etc.), check the power supply, ground, for open wiring harness, poor connectors, etc. If no problem is encountered, check the component parts.

5. SYSTEM OPERATION CHECK

After repairing, ensure that the system operates properly.

B: BASIC INSPECTION

1. VOLTAGE MEASUREMENT

1) Using a voltmeter, connect the negative lead to a good ground point or negative battery terminal and the positive lead to the connector or component terminal.
2) Contact the positive lead of the voltmeter on connector (A). The voltmeter will indicate a voltage.
3) Touch connector (B) with the positive probe. The voltmeter will indicate no voltage.

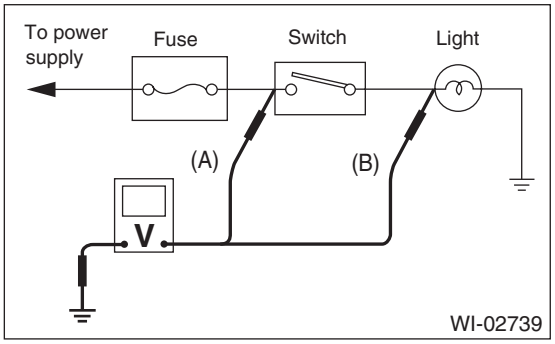

4) With the test set-up held as it is, turn the switch to ON. The voltmeter will indicate a voltage and, at the same time, the light will illuminate.
5) The circuit is in good order. If a problem such as a light failing to illuminate occurs, use the procedures outlined above to track down the malfunction.

2. CIRCUIT CONTINUITY CHECKS

1) Disconnect the battery terminal or connector so there is no voltage between the check points.
Contact the two leads of an ohmmeter to each of the check points.
If the circuit has diodes, reverse the two leads and check again.
2) Use an ohmmeter to check for diode continuity.
When contacting the negative lead to the diode positive side and the positive lead to the negative side, there should be continuity.
When contacting the two leads in reverse, there should be no continuity.

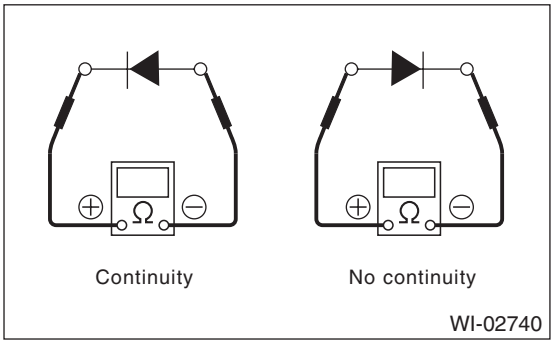

3) The symbol "❍ — ❍" indicates that continuity exists between two points or terminals. For example, when a switch position is at "3", continuity exists among terminals 1, 3 and 6, as shown in the table below.

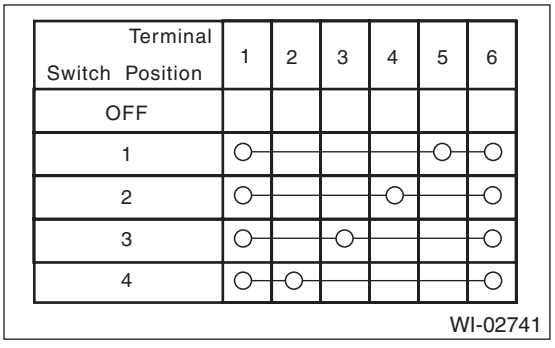

Terminal / Switch Position	1	2	3	4	5	6
OFF						
1	○				○	○
2	○			○		○
3	○		○			○
4	○	○				○

3. HOW TO DETERMINE AN OPEN CIRCUIT

1) WITH VOLTMETER:
An open circuit is determined by measuring the voltage between respective connectors and ground using a voltmeter, starting with the connector closest to the power supply. The power supply must be turned ON so that current flows in the circuit. If voltage is not present between a particular connector and ground, the circuit between that connector and the previous connector is open.

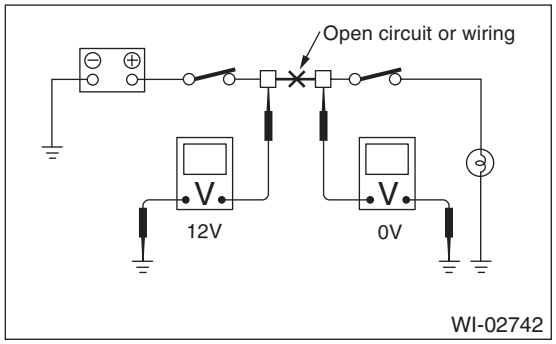

2) WITH OHMMETER:
Disconnect all connectors affected, and check continuity in the wiring between adjacent connectors. When the ohmmeter indicates “infinite”, the wiring is open.

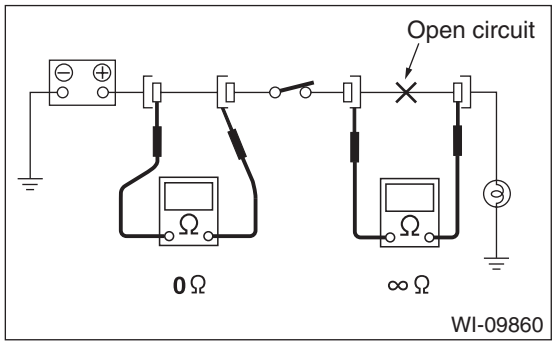

4. HOW TO DETERMINE A SHORT CIRCUIT

1) WITH TEST LIGHT:
Connect a test light (rated at approx. 3 watts) in place of the blown fuse and allow current to flow through the circuit. Disconnect one connector at a time from the circuit. Starting with the one located farthest from the power supply. If the test light goes out when a connector is disconnected, the wiring between that connector and the next connector (farther from the power supply) is shorted.

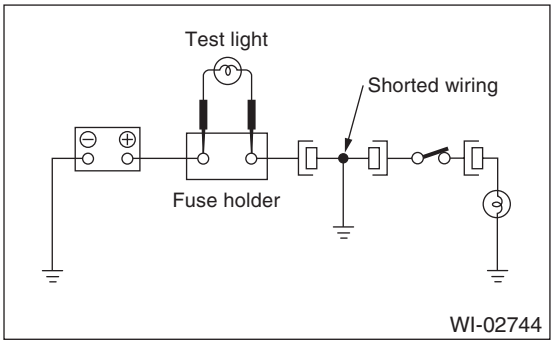

2) WITH OHMMETER:
Disconnect all affected connectors, and check continuity between each connector and ground. When the ohmmeter indicates continuity between a particular connector and a ground, that connector is shorted.

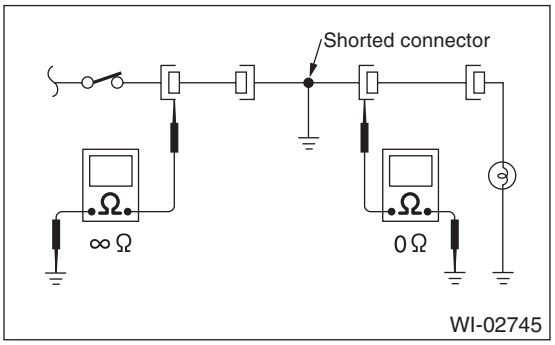

C: HOW TO READ WIRING DIAGRAMS

1. WIRING DIAGRAM

The wiring diagram of each system is illustrated so that you can understand the path through which the electric current flows from the battery.
Sketches and codes are used in the diagrams. They should read as follows:

- Each connector and its terminal position are indicated by a sketch of the connector in a disconnected state which is viewed from the front.

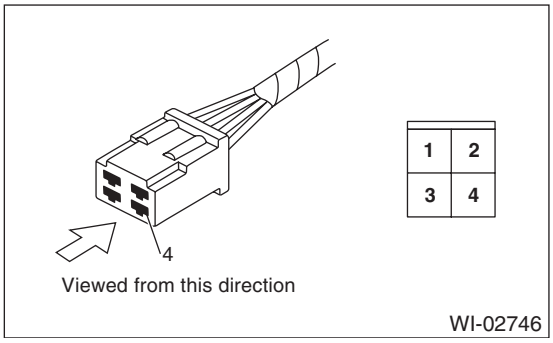

- The number of poles or pins, presence of a lock are indicated in the sketch of each connector. In the sketch, the highest pole number refers to the number of poles which the connector has. For example, the sketch of the connector shown in figure indicates the connector has 9 poles.

Connector used in vehicle	Connector shown in wiring diagram		
	Sketch	Symbol	Number of poles
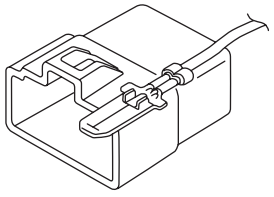	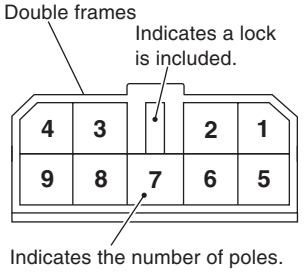	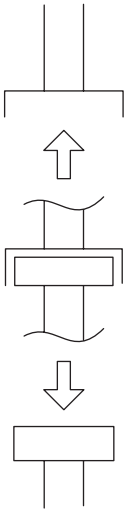	Numbered in order from upper right to lower left.
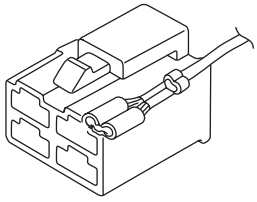	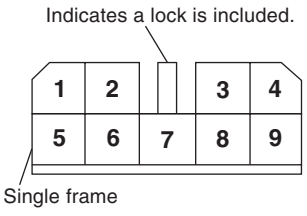		Numbered in order from upper left to lower right.

WI-02747

• When one set of connectors is viewed from the front side, the pole numbers of one connector are symmetrical to those of the other. When these two connectors are connected as a unit, the poles which have the same number are joined.

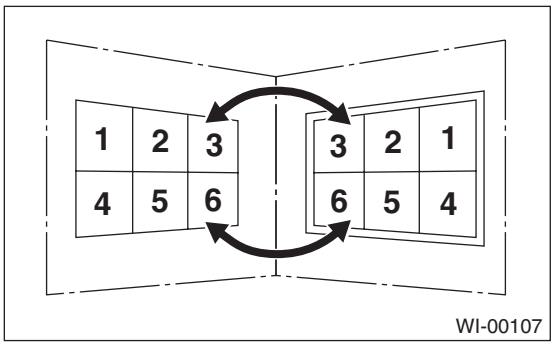

• WIRING DIAGRAM:
The connectors are numbered along with the number of poles, external colors, and mating connections in the accompanying list.
• The sketch of each connector in the wiring diagram usually shows the (A) side of the connector. The relationship between the wire color, terminal number and connector is described in the figure.

NOTE:
A wire which runs in one direction from a connector terminal sometimes may have a different color from that which runs in the other direction from that terminal.

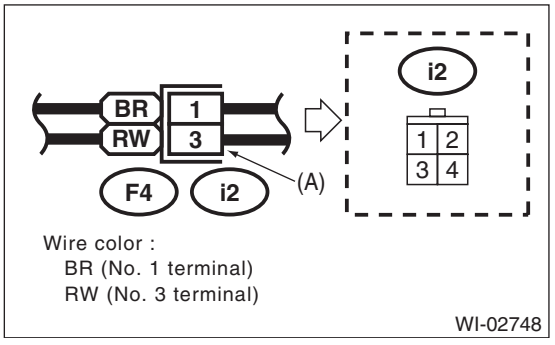

• In the wiring diagram, connectors which have no terminal number refer to one-pole types. Sketches of these connectors are omitted intentionally.

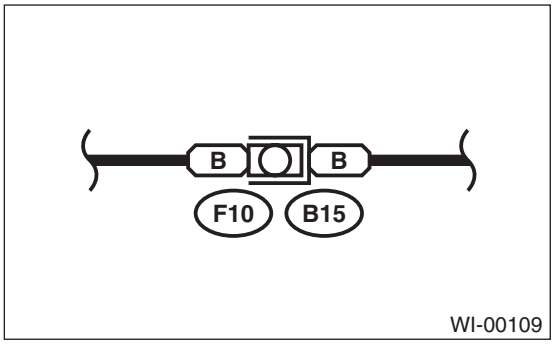

• The following color codes are used to indicate the colors of the wires.

Color code	Color
L	Blue
B	Black
Y	Yellow
G	Green
R	Red
W	White
Br	Brown
Lg	Light green
Gr	Gray
P	Pink
Or	Orange
Sb	Light blue
V	Violet
SA	Sealed (inner)
SB	Sealed (outer)

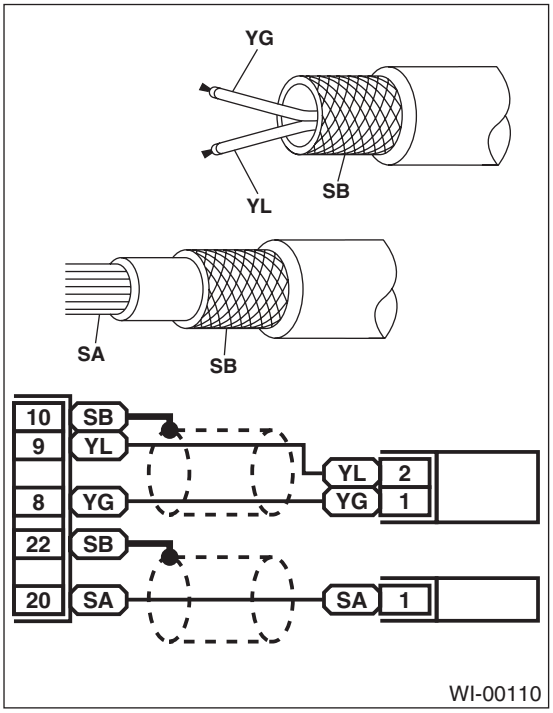

• The wire color code, which consists of two letters (or three letters including Br or Lg), indicates the standard color (base color of the wire covering) by its first letter and the stripe marking by its second letter.

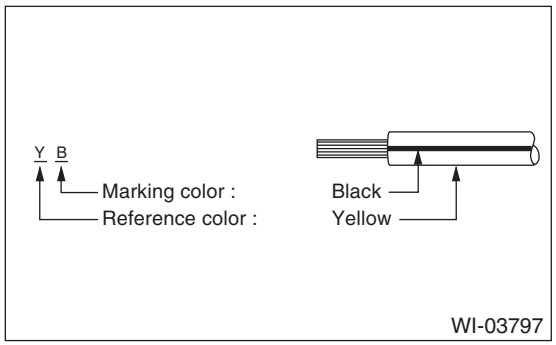

• The table lists the nominal sectional areas and allowable currents of the wires.

CAUTION:
When replacing or repairing a wire, be sure to use the same size and type of the wire which was originally used.

NOTE:
• The allowable current in the table indicates the tolerable amperage of each wire at an ambient temperature of 40°C (104°F).
• The allowable current changes with ambient temperature. Also, it changes if a bundle of more than two wires is used.

Nominal sectional area mm^2	No. of strands/ strand diameter	Outside diameter of wiring mm	Allowable current Amps/ 40°C (104°F)
0.3	7/0.26	1.8	7
0.5	7/0.32	2.2 (or 2.0)	12
0.75	30/0.18	2.6 (or 2.4)	16
0.85	11/0.32	2.4 (or 2.2)	16
1.25	16/0.32	2.7 (or 2.5)	21
2	26/0.32	3.1 (or 2.9)	28
3	41/0.32	3.8 (or 3.6)	38
5	65/0.32	4.6 (or 4.4)	51
8	50/0.45	5.5	67

• Each unit is either directly grounded to the body or indirectly grounds through a harness ground terminal. Different symbols are used in the wiring diagram to identify the two grounding systems.

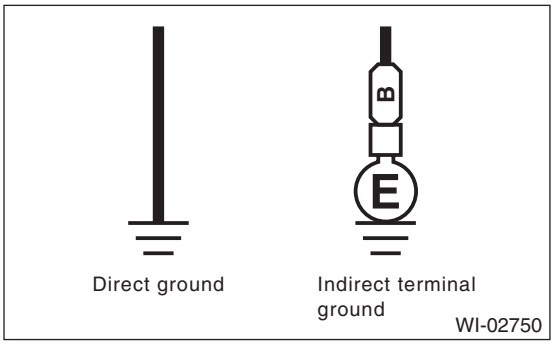

• The ground points shown in the wiring diagram refer to the following:

NOTE:
All wiring harnesses are provided with a ground point which must be securely connected.

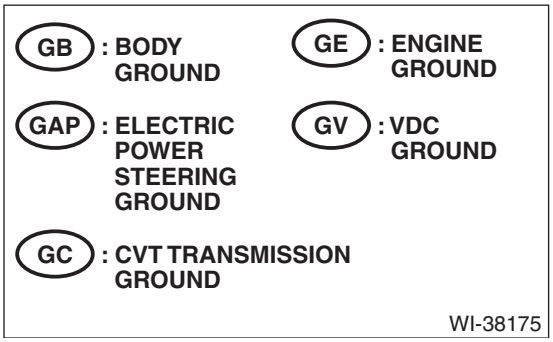

- Relays are classified as normally-open or normally-closed.

The normally-closed relay has one or more contacts. The wiring diagram shows the relay mode when the energizing circuit is OFF.

Relay type		Energizing circuit OFF	Energizing circuit ON
Normally-open type	4-pole	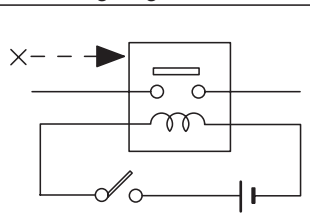	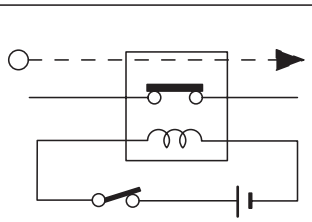
	6-pole	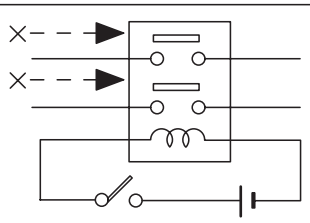	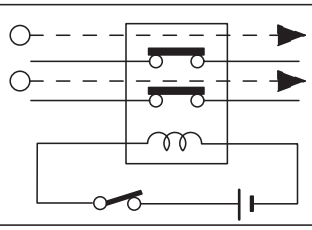
Normally-closed type	4-pole	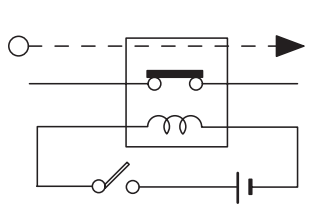	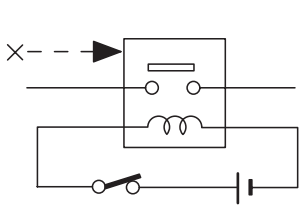
Mixed type	6-pole	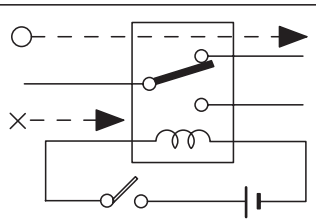	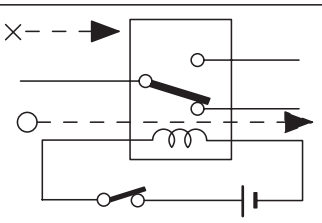

Key to symbols:

○ ⟶ : Current flows.

× ⟶ : Current does not flow.

WI-16724

• Each connector number shown in the wiring diagram corresponds to that in the wiring harness. The location of each connector in the actual vehicle is determined by reading the first character of the connector (for example, a “F” for F8, “i” for i16, etc.) and the type of wiring harness. The first character of each connector number corresponds to the area or system of the vehicle.

Symbol	Wiring harness and cord
F	Front wiring harness
B	Bulkhead wiring harness
E	Engine wiring harness
T	Transmission cord
D	Door cord LH & RH, Rear gate cord Rear door cord LH & RH, Rear defogger cord
i	Instrument panel wiring harness
R	Rear wiring harness, Fuel tank cord, Roof cord, Rear gate cord
AB	Airbag wiring harness

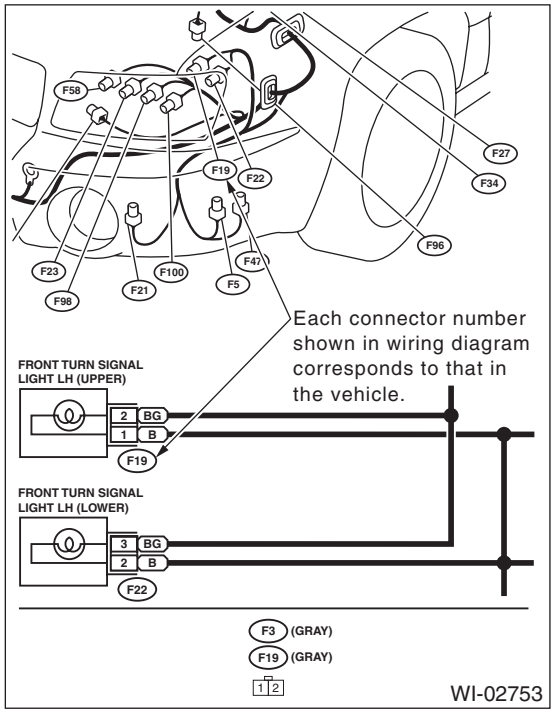

D: SYMBOLS IN WIRING DIAGRAMS

A number of symbols are used in each wiring diagram to easily identify parts or circuits.

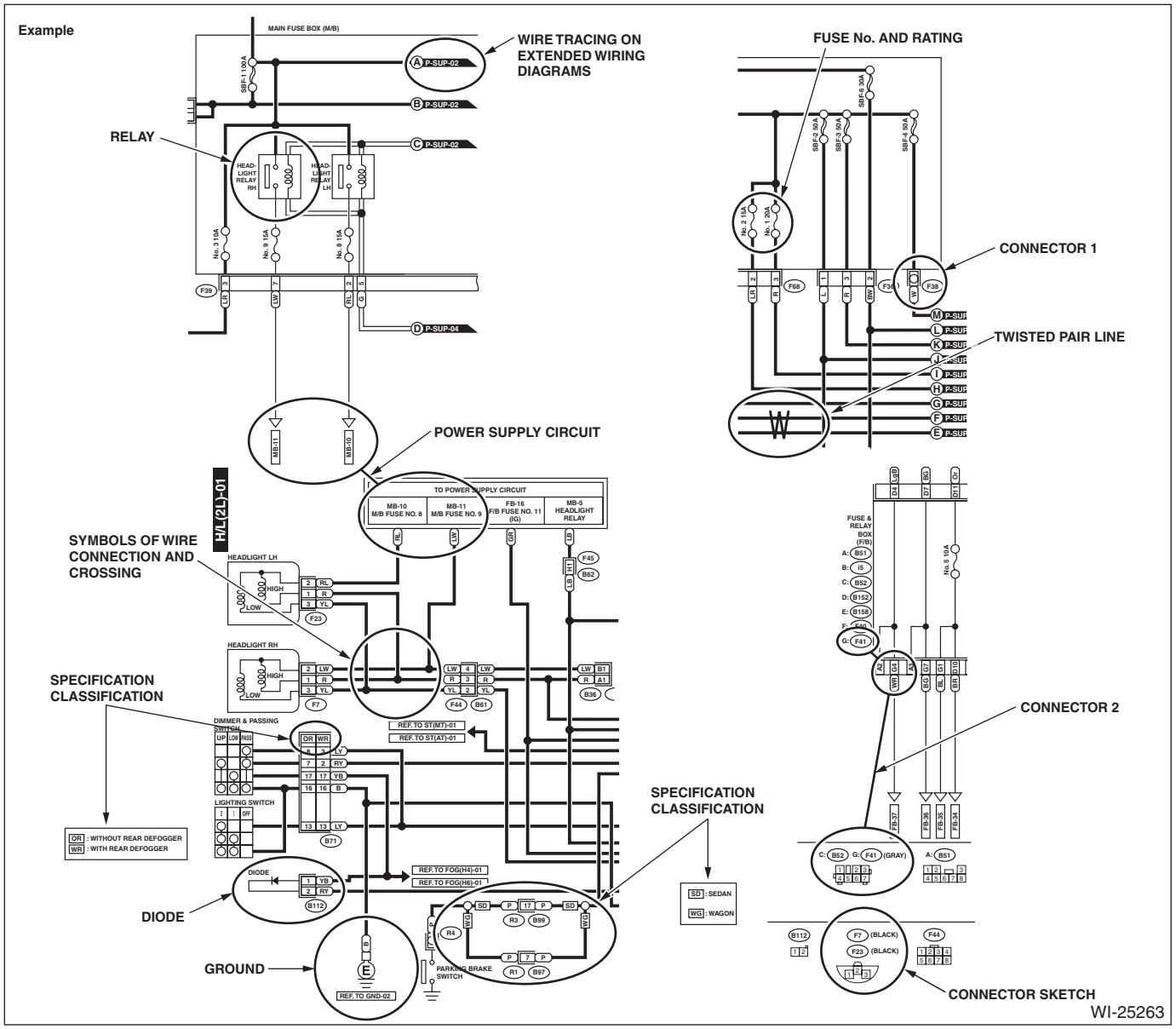

1. RELAY

A symbol used to indicate a relay.

2. CONNECTOR 1

The sketch of the connector indicates the one-pole types.

3. WIRING CONNECTION

Some wiring diagrams are indicated in foldouts for convenience. Wiring destinations are indicated where necessary by corresponding symbols. (When two pages are needed for clear indication)

4. FUSE NO. & RATING

The “FUSE No. & RATING” corresponds with that used in the fuse box (main fuse box, fuse and joint box).

5. CONNECTOR 2

- Each connector is indicated by a symbol.
- Each terminal number is indicated in the corresponding wiring diagram in an abbreviated form.
- For example, terminal number “G4” refers to No. 4 terminal of connector (G: F41) shown in the connector sketch.

6. CONNECTOR SKETCH

- Each connector sketch clearly identifies the shape and color of a connector as well as terminal locations. Non-colored connectors are indicated in natural color.
- When more than two types of connector number are indicated in a connector sketch, it means that the same type connectors are used.

7. GROUND

Each grounding point can be located easily by referring to the corresponding wiring harness.

8. DIODE

A symbol is used to indicate a diode.

9. WIRE TRACING ON EXTENDED WIRING DIAGRAMS

For a wiring diagram extending over at least two pages, a symbol (consisting of the same characters with arrows), facilitates wire tracing from one page to the next.

A ←→ A, B ←→ B

10.SYMBOLS OF WIRE CONNECTION AND CROSSING

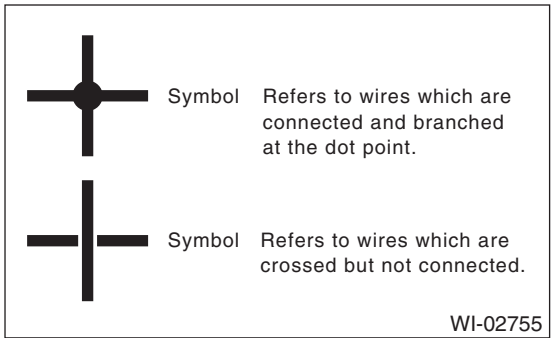

11.POWER SUPPLY CIRCUIT

A symbol is used to indicate the power supply in each wiring diagram.

“MB – 5”, “MB – 6”, etc., which are used as power-supply symbols throughout the text, correspond with those shown in the “DC POWER SUPPLY CIRCUIT” in the wiring diagram.

Accordingly, using the “DC POWER SUPPLY CIRCUIT” and wiring diagrams permits service personnel to understand the entire electrical arrangement of a system.

12.CLASSIFICATION BY SPECIFICATION

When the wiring diagram differ according to vehicle specifications, the specification difference is described by using abbreviations.

13.TWISTED PAIR LINE

The twisted pair line is indicated by a symbol in the wiring diagrams.

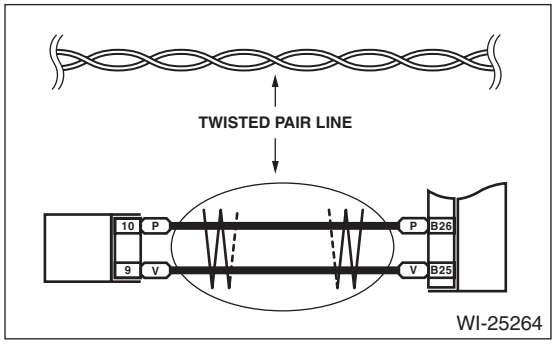

E: CONNECTOR SYMBOL IN WIRING HARNESS

A number of connector symbols are used in each wiring diagram to easily identify the wiring harness connectors.

Standard type: Female		
Pole: From 1 to 8	Pole: From 9 to 20	Pole: More than 21
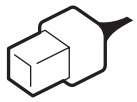	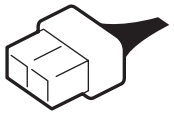	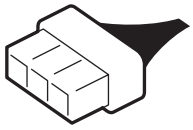
		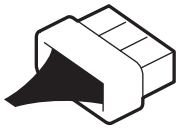
Standard type: Male		
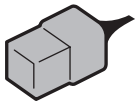	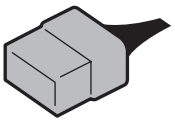	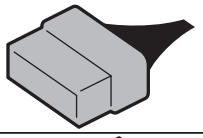
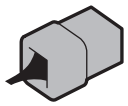	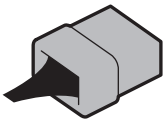	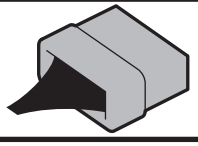

Water proof type: Female		
Pole: From 1 to 8	Pole: From 9 to 20	Pole: More than 21
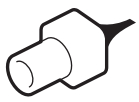		
Water proof type: Male		
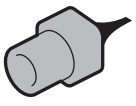	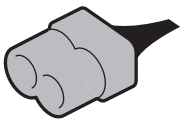	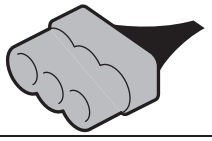
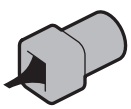	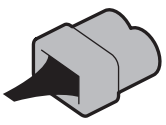	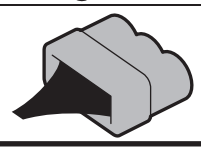

WI-02756

F: ABBREVIATION IN WIRING DIAGRAMS

Abbr.	Full name
ABS	Anti-lock Brake System
ACC	Accessory
A/C	Air Conditioner
ASSY	Assembly
AT	Automatic Transmission
A/F	Air/Fuel (air fuel ratio sensor)
ATF	Automatic Transmission Fluid
AUX	Auxiliary Audio Input Terminal
AWD	All Wheel Drive
B	Battery
CAN	Controller Area Network
CM	Control Module
CVT	Continuously Variable Transmission
D	Drive range or Down
DN	Down
E	Ground
ELCM	Evaporative Leak Check Module
ECO	Economy
ECM	Engine Control Module
EEPROM	Electrically Erasable Programmable Read-Only Memory
EGR	Exhaust Gas Recirculation
F/B	Fuse & Relay Box
FL	Front Left
FR	Front Right
G	Gravity (G sensor)
H/L	Headlight
HI	High
I/F	Interface
IG	Ignition
INT	Intermittent
ISO	International Organization for Standardization
J/C	Joint Connector
LCD	Liquid Crystal Display
LH	Left Hand
LO	Low
LWR	Lower
M	Motor
M/B	Main Fuse Box
MFD	Multi Function Display
MT	Manual Transmission
N	Neutral Range
NAVI	Navigation
OP	Open or Optional Parts
P	Parking or Parking range
PASS	Passing
PCV	Positive Crankcase Ventilation Valve
R	Reverse Range

Abbr.	Full name
RH	Right Hand
RL	Rear Left
RR	Rear Right
SBF	Slow Blow Fuse
SRF	Steering responsive fog light
ST	Starter
SW	Switch
TCM	Transmission Control Module
TFT	Thin Film Transistor
TPMS	Tire Pressure Monitor System
UPR	Upper
VDC	Vehicle Dynamics Control
WASH	Washer

2. Working Precautions

A: PRECAUTIONS WHEN WORKING WITH THE PARTS MOUNTED ON THE VEHICLE

1) When working under a vehicle which is jacked-up, always be sure to use rigid rack.
2) The parking brake must always be applied during working. Also, in automatic transmission vehicles, keep the select lever set to the P (Parking) range.
3) Be sure the workshop is properly ventilated when running the engine. Further, be careful not to touch the belt or fan while the engine is operating.
4) Be careful not to touch hot metal parts, especially the radiator and exhaust system immediately after the engine has been turned off.

B: PRECAUTIONS IN TROUBLE DIAGNOSIS AND REPAIR OF ELECTRIC PARTS

1) The battery cable must be disconnected from the battery's (–) terminal, and the ignition switch must be set to the OFF position, unless otherwise required by the diagnostics.
2) Securely fasten the wiring harness with clamps and clips so that the harness does not interfere with the body end parts, edges, bolts or screws.
3) When installing parts, be careful not to catch them on the wiring harness.
4) When disconnecting a connector, do not pull the wires, but pull while holding the connector body.

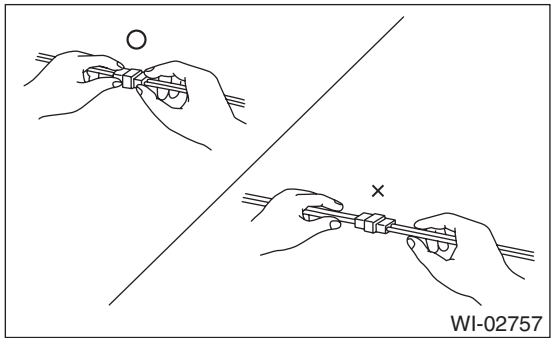

5) Some connectors are provided with a lock. One type of such a connector is disconnected by pushing the lock, and the other, by moving the lock up. In either type the lock shape must be identified before attempting to disconnect the connector.
To connect, insert the connector until it snaps and confirm that it is connected securely.

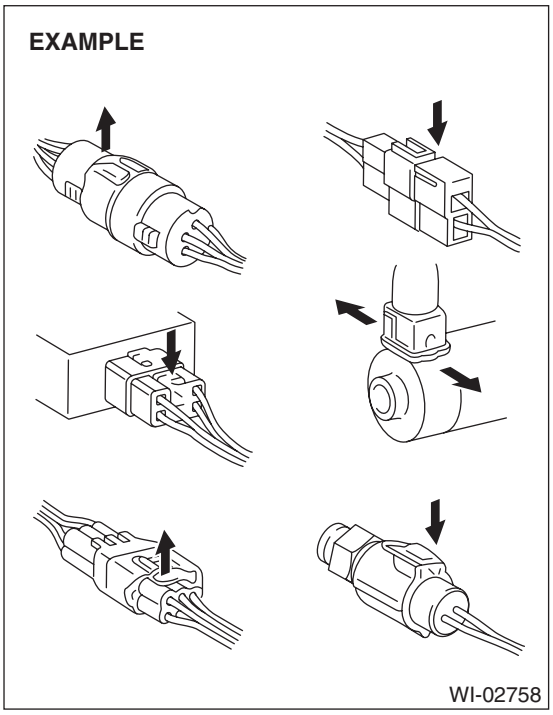

6) When checking continuity between connector terminals, or measuring voltage across the terminal and ground, always touch tester probe(s) to terminals from the wiring connection side. If the probe is too thick to gain access to the terminal, use "mini" test leads.
To check water-proof connectors (which are not measurable from the wiring side), touch test probes on the terminal side and be careful not to bend or damage the terminals.

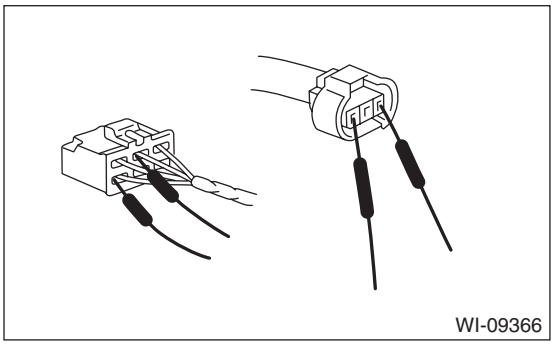

7) When measuring the voltage or resistance of individual sensor or all electrical control modules, use a tapered pin with a diameter of 0.6 mm (0.024 in) or less and touch it to the tip of terminal. Never insert the tapered pin into the terminal at this time. Doing so may cause internal deformation and a malfunction can occur.
8) Sensors, relays, electrical unit, etc., are sensitive to strong impacts.
Handle them with care so that they are not dropped or mishandled.

3. Power Supply Circuit

A: WIRING DIAGRAM

1. WITHOUT PUSH BUTTON START

- **Engine room side**

P-SUP-01

P-SUP-01

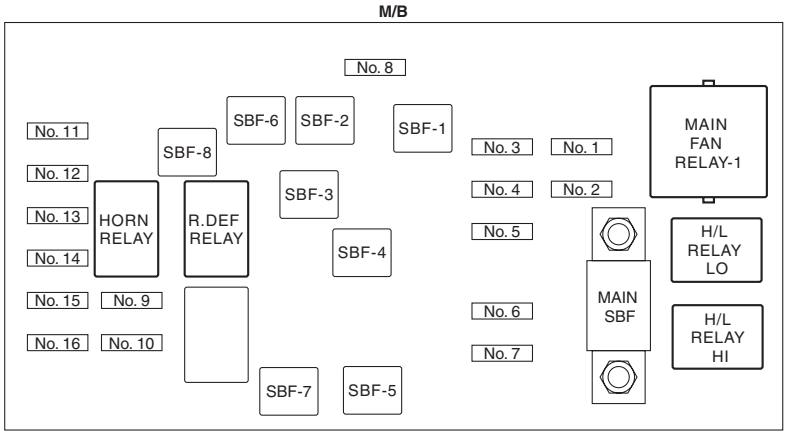

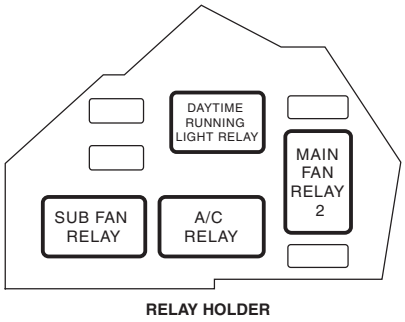

WI-34134

- **Passenger room side**

P-SUP-02

P-SUP-02

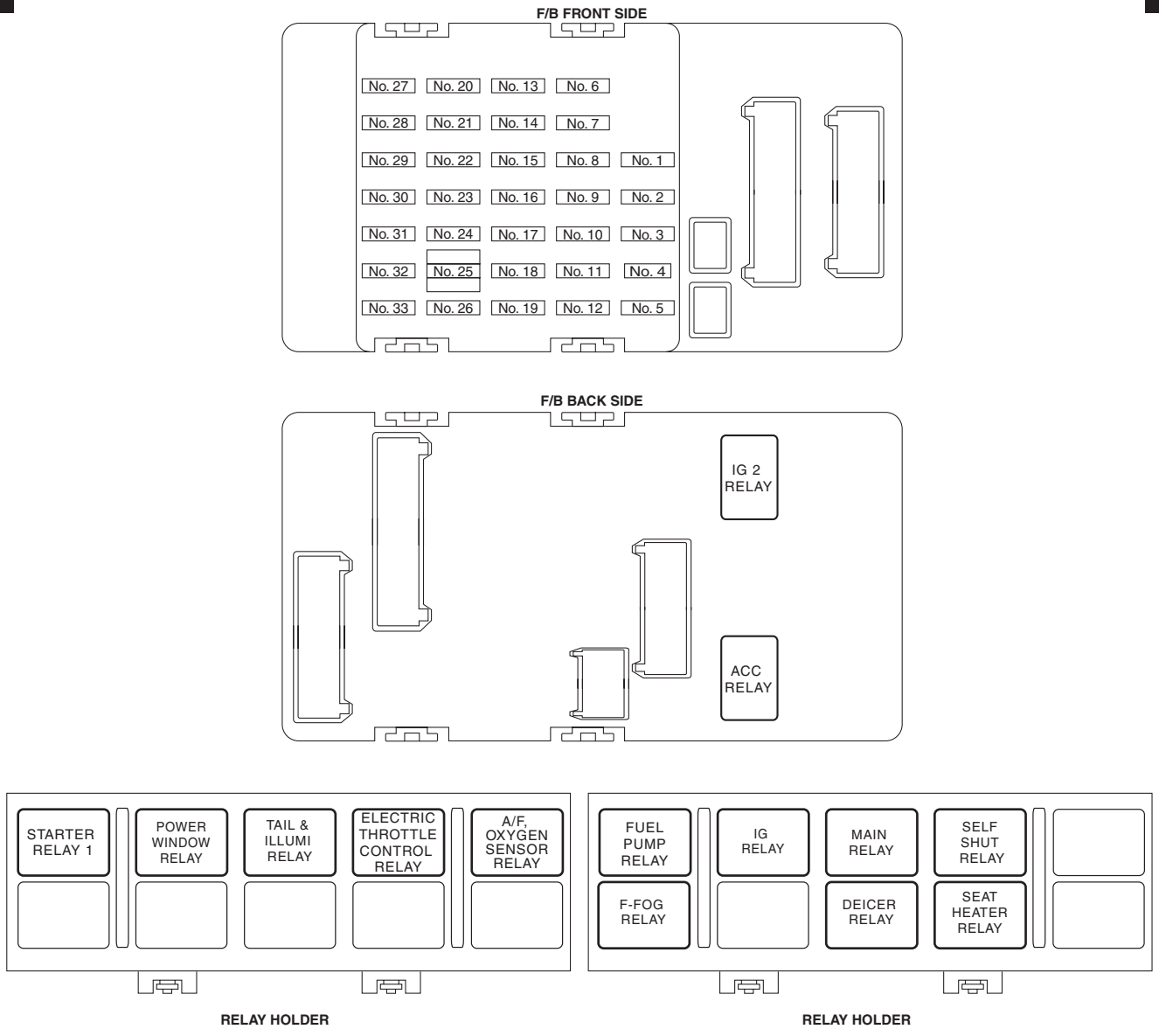

WI-34135

Power Supply Circuit

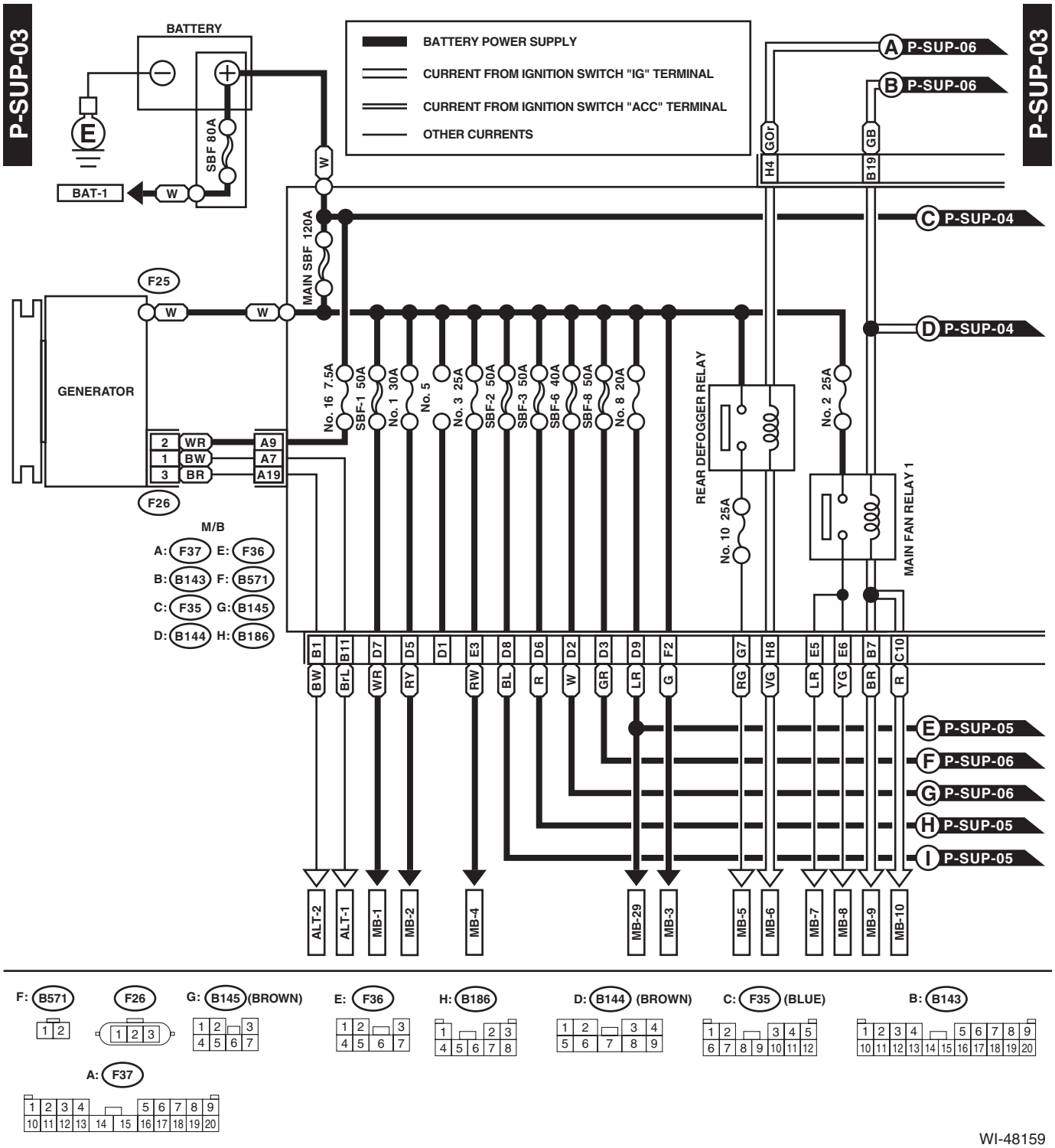

WI-48159

P-SUP-04

P-SUP-04

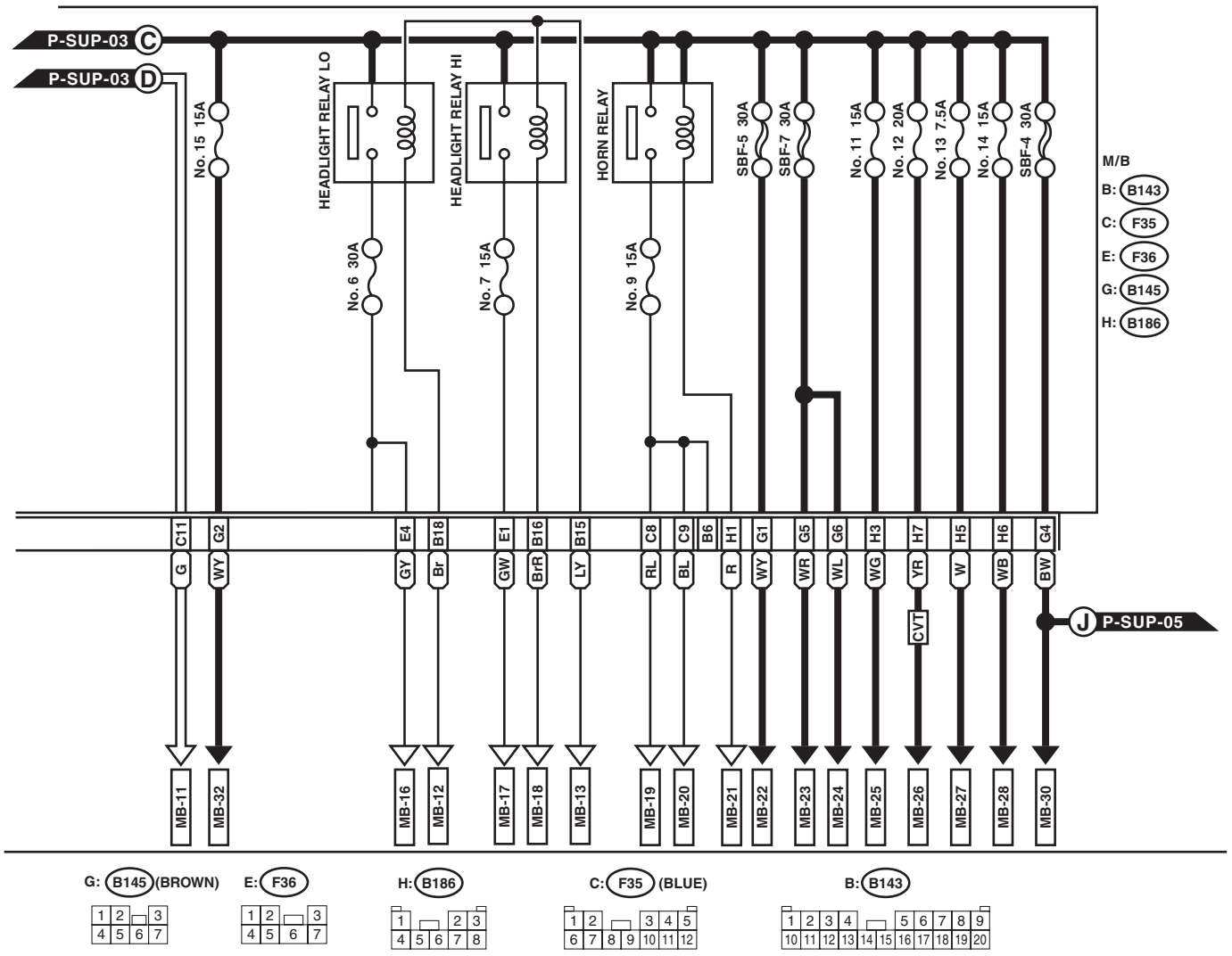

WI-48160

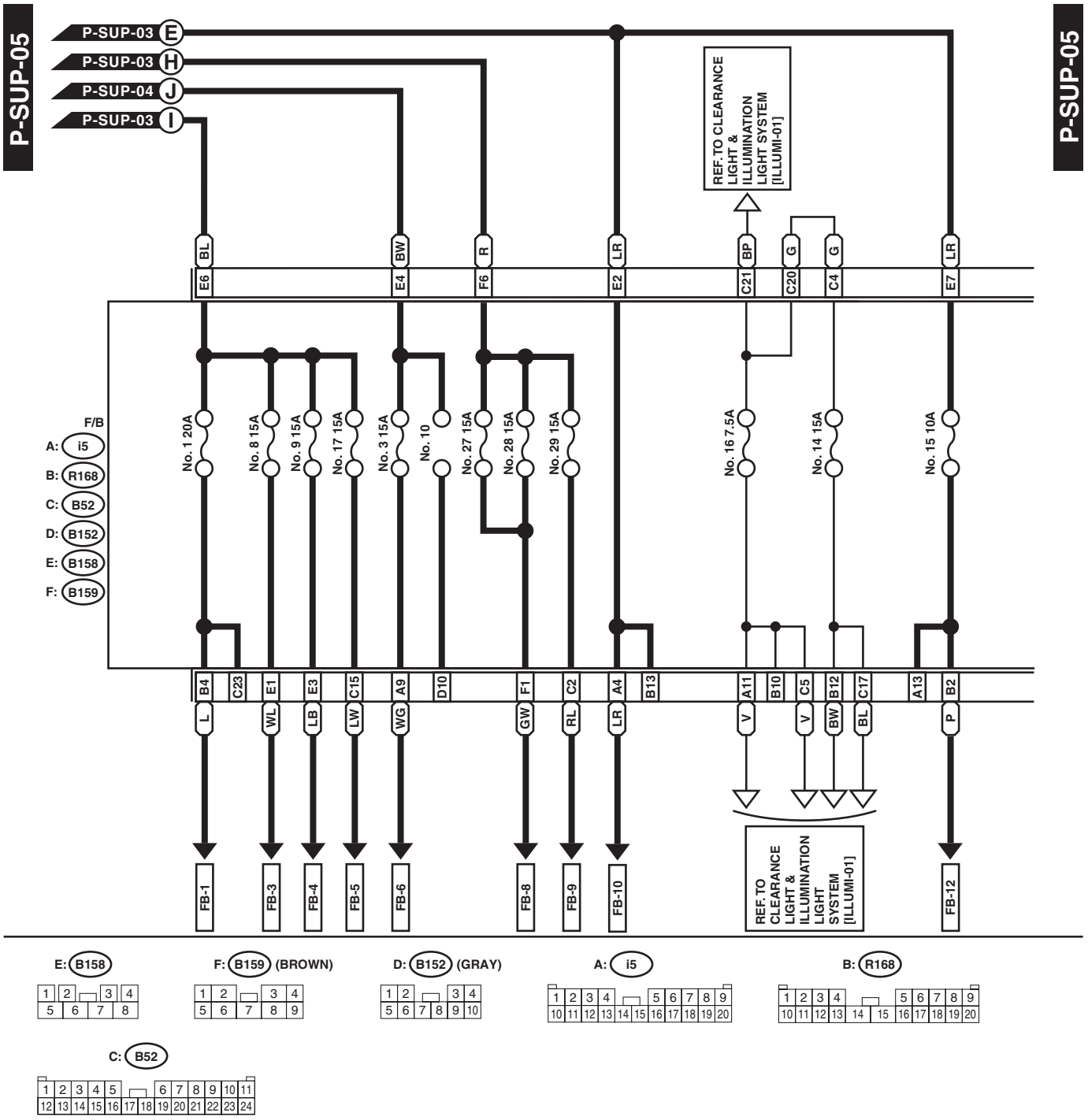
P-SUP-05
P-SUP-03 E
P-SUP-03 H
P-SUP-04 J
P-SUP-03 I
REF.TO CLEARANCE LIGHT & ILLUMINATION LIGHT SYSTEM [ILLUMI-01]
BL
BW
R
LR
BP
G
G
LR
E6
E4
F6
E2
C21
C20
C4
E7
F/B
A: i5
B: R168
C: B52
D: B152
E: B158
F: B159
No. 1 20A
No. 8 15A
No. 9 15A
No. 17 15A
No. 3 15A
No. 10
No. 27 15A
No. 28 15A
No. 29 15A
No. 16 7.5A
No. 14 15A
No. 15 10A
B4
C23
E1
E3
C15
A9
D10
F1
C2
A4
B13
A11
B10
C5
B12
C17
A13
B2
L
WL
LB
LW
WG
GW
RL
LR
V
V
BW
BL
P
FB-1
FB-3
FB-4
FB-5
FB-6
FB-8
FB-9
FB-10
REF.TO CLEARANCE LIGHT & ILLUMINATION LIGHT SYSTEM [ILLUMI-01]
FB-12
P-SUP-05

E: B158
F: B159 (BROWN)
D: B152 (GRAY)
A: i5
B: R168
C: B52

WI-37806

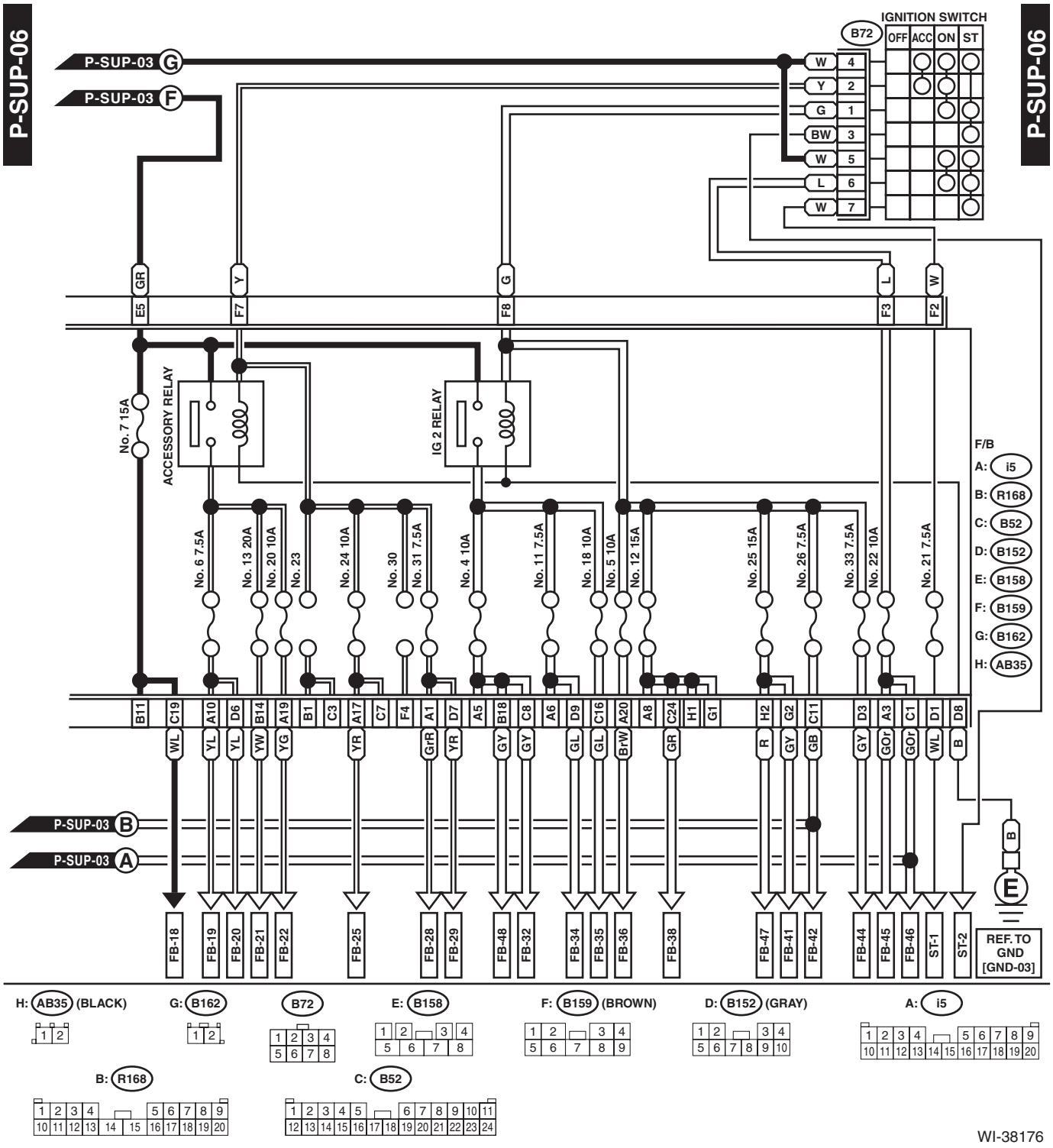
P-SUP-06
P-SUP-06
IGNITION SWITCH
B72
OFF ACC ON ST
W 4
Y 2
G 1
BW 3
W 5
L 6
W 7
P-SUP-03 G
P-SUP-03 F
E5 GR
F7 Y
F8 G
F3 L
F2 W
No. 7 15A
ACCESSORY RELAY
IG 2 RELAY
No. 6 7.5A
No. 13 20A
No. 20 10A
No. 23
No. 24 10A
No. 30
No. 31 7.5A
No. 4 10A
No. 11 7.5A
No. 18 10A
No. 5 10A
No. 12 15A
No. 25 15A
No. 26 7.5A
No. 33 7.5A
No. 22 10A
No. 21 7.5A
F/B
A: i5
B: R168
C: B52
D: B152
E: B158
F: B159
G: B162
H: AB35
B11 C19 A10 D6 B14 A19 B1 C3 A17 C7 F4 A1 D7 A5 B18 C8 A6 D9 C16 A20 A8 C24 H1 G1 H2 G2 C11 D3 A3 C1 D1 D8
WL YL YL YW YG YR GrR YR GY GY GL GL BrW GR R GY GB GY GOr GOr WL B
P-SUP-03 B
P-SUP-03 A
B
E
FB-18 FB-19 FB-20 FB-21 FB-22 FB-25 FB-28 FB-29 FB-48 FB-32 FB-34 FB-35 FB-36 FB-38 FB-47 FB-41 FB-42 FB-44 FB-45 FB-46 ST-1 ST-2
REF. TO GND [GND-03]
H: AB35 (BLACK)
G: B162
B72
E: B158
F: B159 (BROWN)
D: B152 (GRAY)
A: i5
B: R168
C: B52

WI-38176

No.	Load
MB-1	VDC CM
MB-2	VDC CM
MB-3	Wiper relay
MB-4	Sub fan relay
MB-5	Mirror heater LH
	Mirror heater RH
	Rear defogger
	A/C control panel
MB-6	Body integrated unit
MB-7	Main fan relay 2
MB-8	Main fan motor
MB-9	ECM
MB-10	Main fan relay 2
MB-11	Main fan relay 2
MB-12	Body integrated unit
MB-13	Body integrated unit
MB-16	Front combination light LH
	Front combination light RH
MB-17	Daytime running light relay
MB-18	Body integrated unit
MB-19	Horn
MB-20	Horn
MB-21	Horn switch
	Body integrated unit
MB-22	A/F, oxygen sensor relay
MB-23	Main relay
	IG relay
MB-24	Electronic throttle control relay
MB-25	Fuel pump relay
MB-26	TCM
	Self shut relay
MB-27	ECM
	Data link connector
MB-28	Key warning switch
	Turn signal and hazard unit
	Body integrated unit
MB-29	Spot map light
	Room light
	Body integrated unit
	Immobilizer antenna
MB-30	Power window circuit breaker
MB-32	Tail & illumination relay
	Daytime running light relay
ALT-1	Combination meter
ALT-2	ECM
ST-1	Starter relay 1
	Clutch start switch
ST-2	Starter relay 1
FB-1	Trailer connector

No.	Load
FB-3	Stop light and brake switch
	Brake relay
FB-4	Wiper deicer relay
FB-5	Seat heater relay
FB-6	Body integrated unit
FB-8	Blower motor relay
FB-9	Front fog light relay
	Front fog light relay LH
	Front fog light relay RH
FB-10	Audio
	MFD
	Navigation unit
FB-12	Keyless entry CM
	TPMS & keyless entry CM
	Trunk room light (4 door model)
	Luggage room light (5 door model/XV model)
FB-18	Combination meter
	Body integrated unit
	Impact sensor
	Air mix door actuator LH (with left/right independent air conditioner)
	Air mix door actuator RH (with left/right independent air conditioner)
	Mode door actuator
	Air mix door actuator (without left/right independent air conditioner)
	Security CM
	A/C control panel
	Stereo camera
FB-19	Remote control mirror switch
FB-20	Seat heater relay
	Rear view mirror
FB-21	Rear accessory power supply socket
FB-22	Front accessory power supply socket
FB-25	Audio
	Navigation unit
	AUX input terminal
FB-28	A/C control panel
FB-29	Body integrated unit
FB-32	Clutch switch
	Impact sensor
	Data link connector
	Stop light and brake switch
	Wiper deicer relay
	Sunroof motor assembly
	Sunroof switch
	Sunroof switch (tilt)
FB-34	Turn signal and hazard unit

No.	Load
FB-35	Inhibitor switch
	Back-up light switch
	Auto headlight beam leveler CM
FB-36	Combination meter
	MFD
FB-38	ECM
	TCM
	Body integrated unit
	Fuel pump relay
	Stereo camera
FB-41	Airbag CM
FB-42	Power window relay
	Wiper relay
FB-44	VDC CM
	Steering angle sensor
	Power steering CM
FB-45	A/C control panel
FB-46	A/C relay
	Sub fan relay
	Pressure switch
	Blower motor relay
FB-47	Occupant detection control module
FB-48	TPMS & keyless entry CM
BAT-1	Power steering CM

2. WITH PUSH BUTTON START

- **Engine room side**

P-SUP(P)-01

P-SUP(P)-01

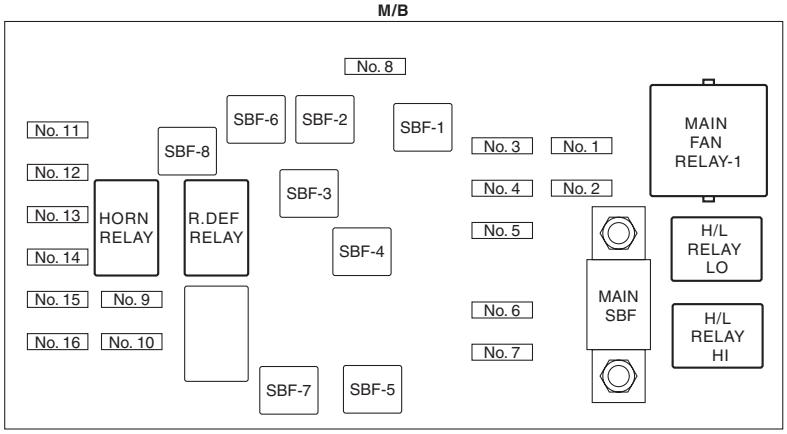

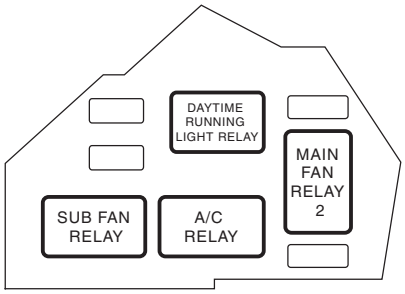

WI-48161

- **Passenger room side**

P-SUP(P)-02

P-SUP(P)-02

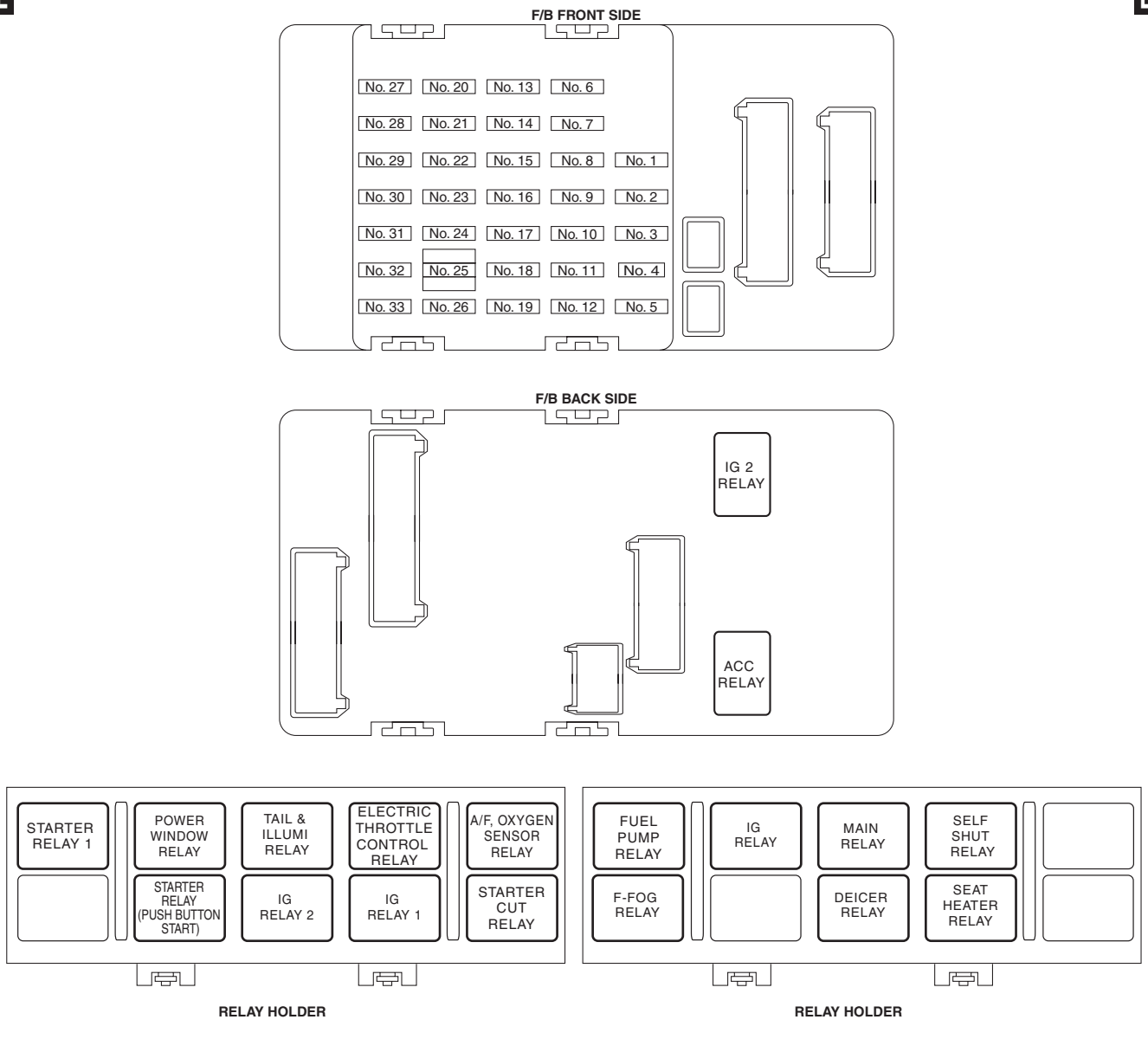

WI-48162

Power Supply Circuit

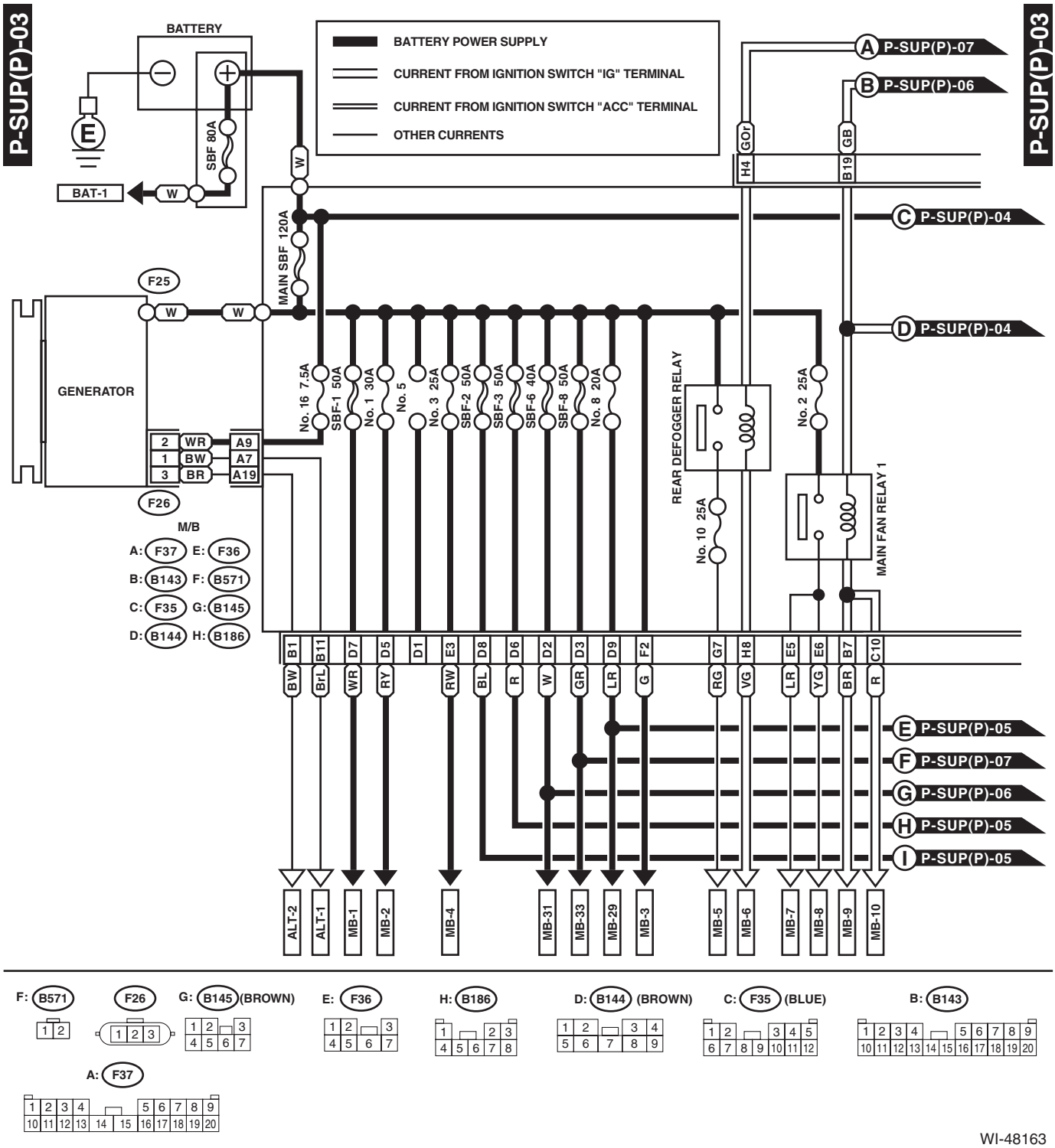

P-SUP(P)-04

P-SUP(P)-04

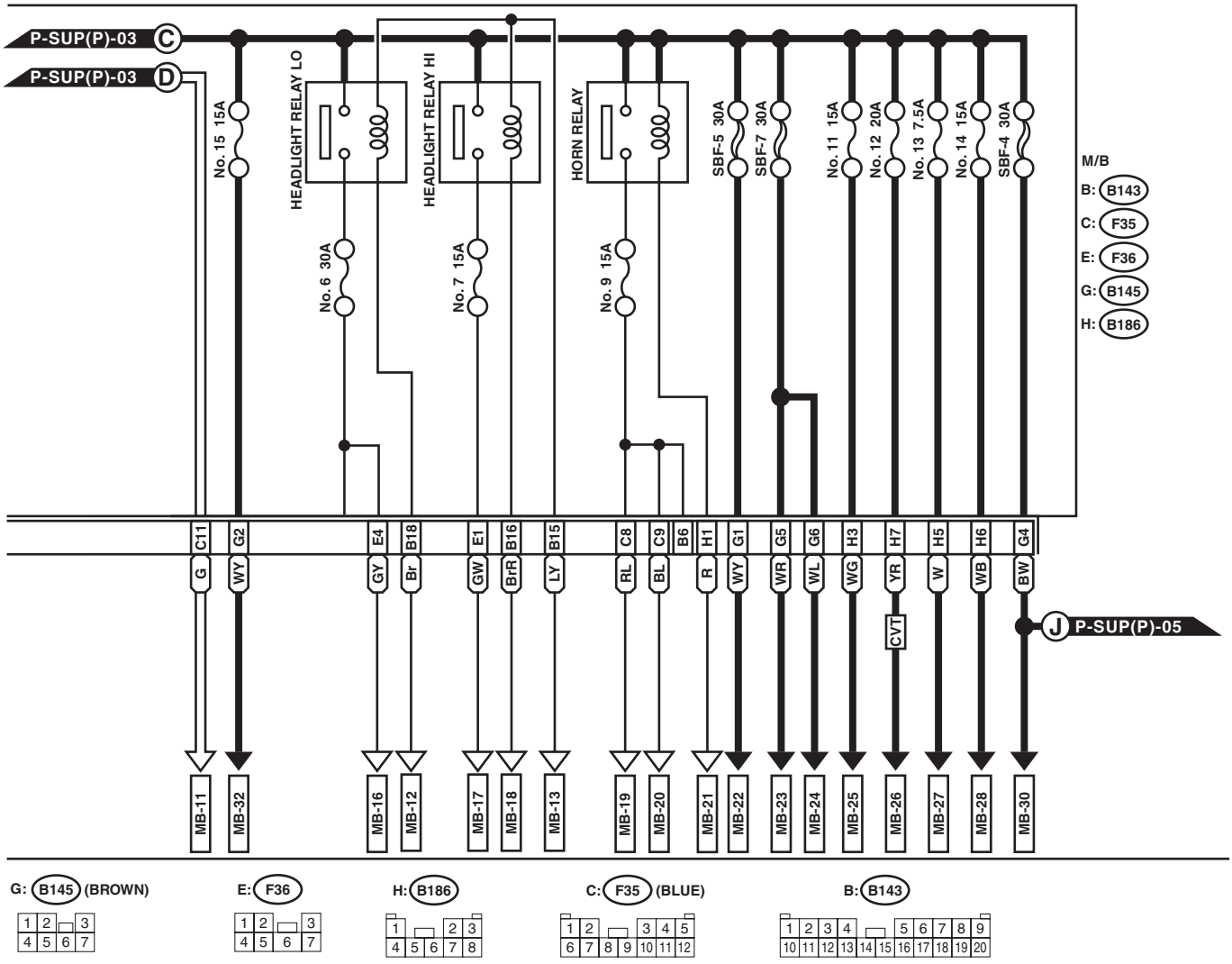

WI-48164

Power Supply Circuit

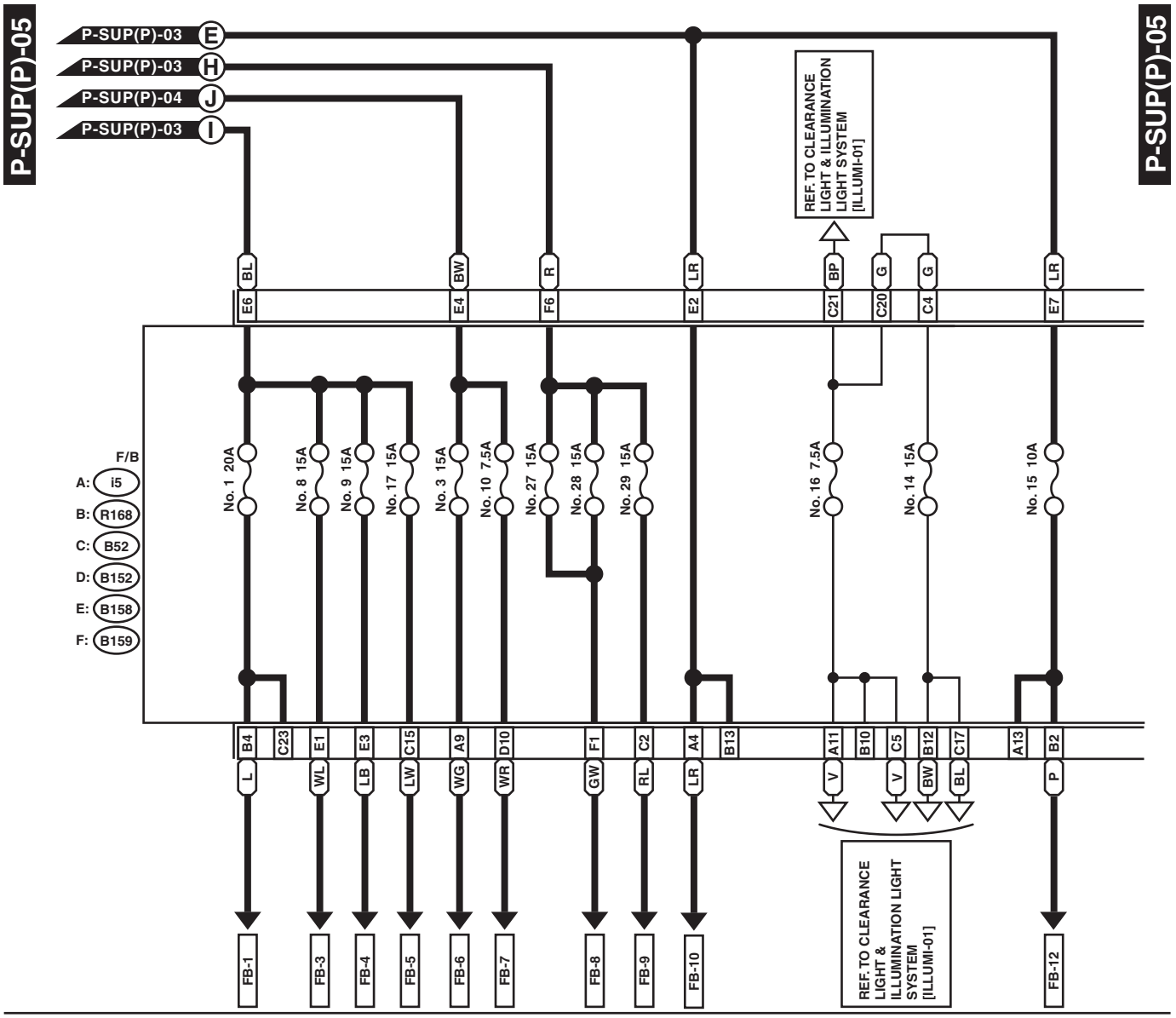

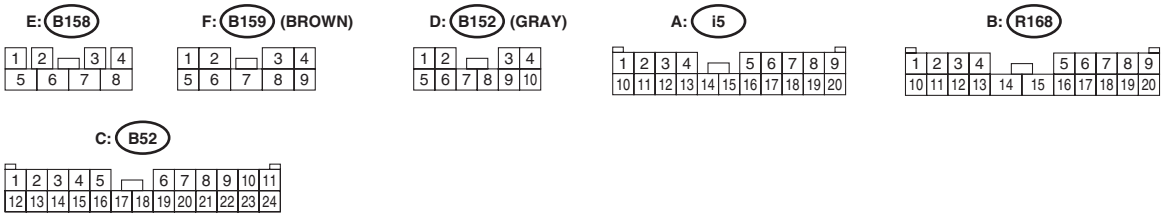

WI-48165

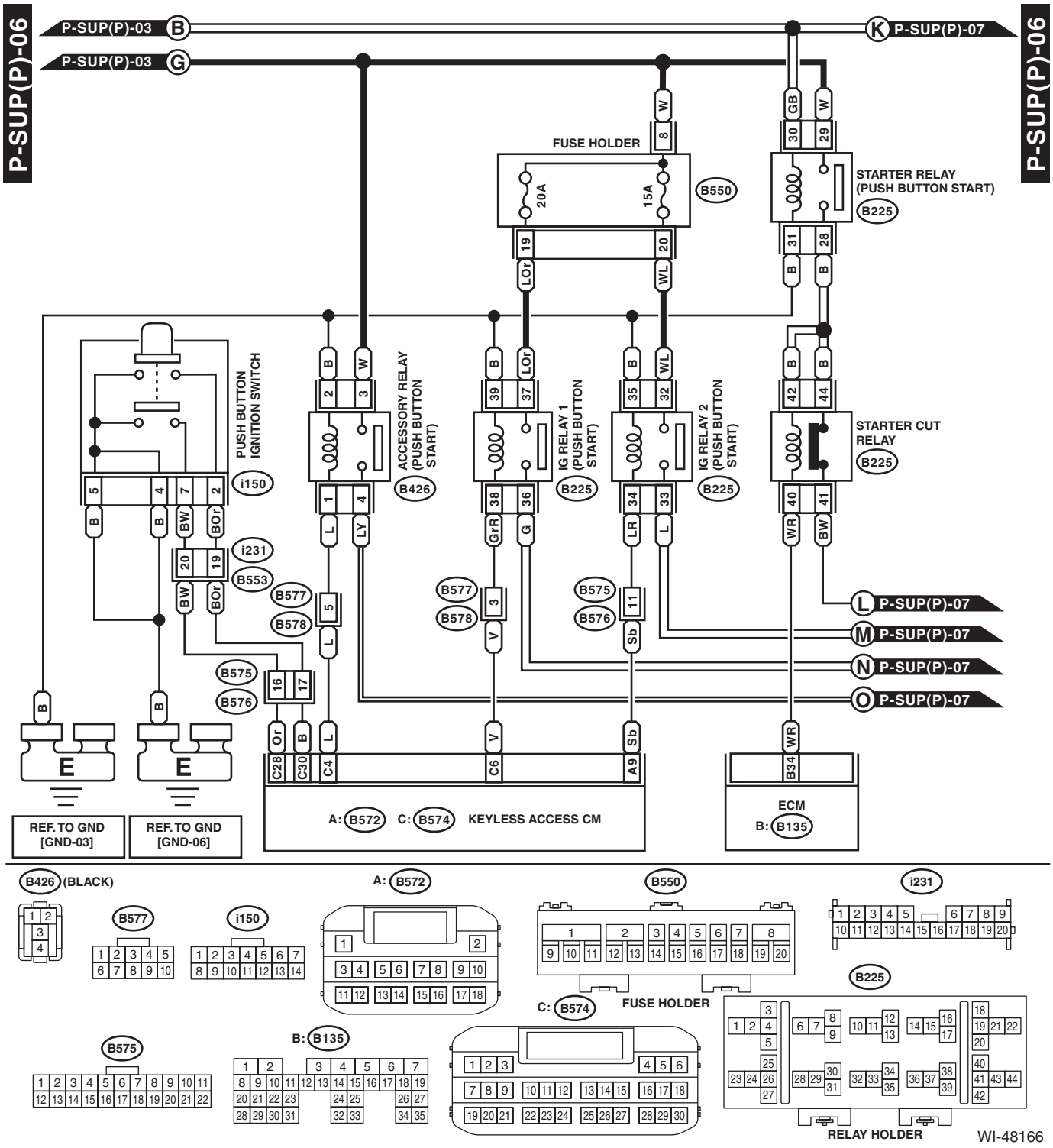
P-SUP(P)-06
P-SUP(P)-03 B
P-SUP(P)-03 G
K P-SUP(P)-07
FUSE HOLDER
20A
15A
B550
STARTER RELAY (PUSH BUTTON START)
B225
PUSH BUTTON IGNITION SWITCH
i150
ACCESSORY RELAY (PUSH BUTTON START)
B426
IG RELAY 1 (PUSH BUTTON START)
IG RELAY 2 (PUSH BUTTON START)
STARTER CUT RELAY
i231
B553
B577
B578
B575
B576
L P-SUP(P)-07
M P-SUP(P)-07
N P-SUP(P)-07
O P-SUP(P)-07
REF. TO GND [GND-03]
REF. TO GND [GND-06]
A: B572 C: B574 KEYLESS ACCESS CM
ECM B: B135

B426 (BLACK)
B577
i150
A: B572
B550
i231
B225
C: B574
FUSE HOLDER
B575
B: B135
RELAY HOLDER
WI-48166

Power Supply Circuit

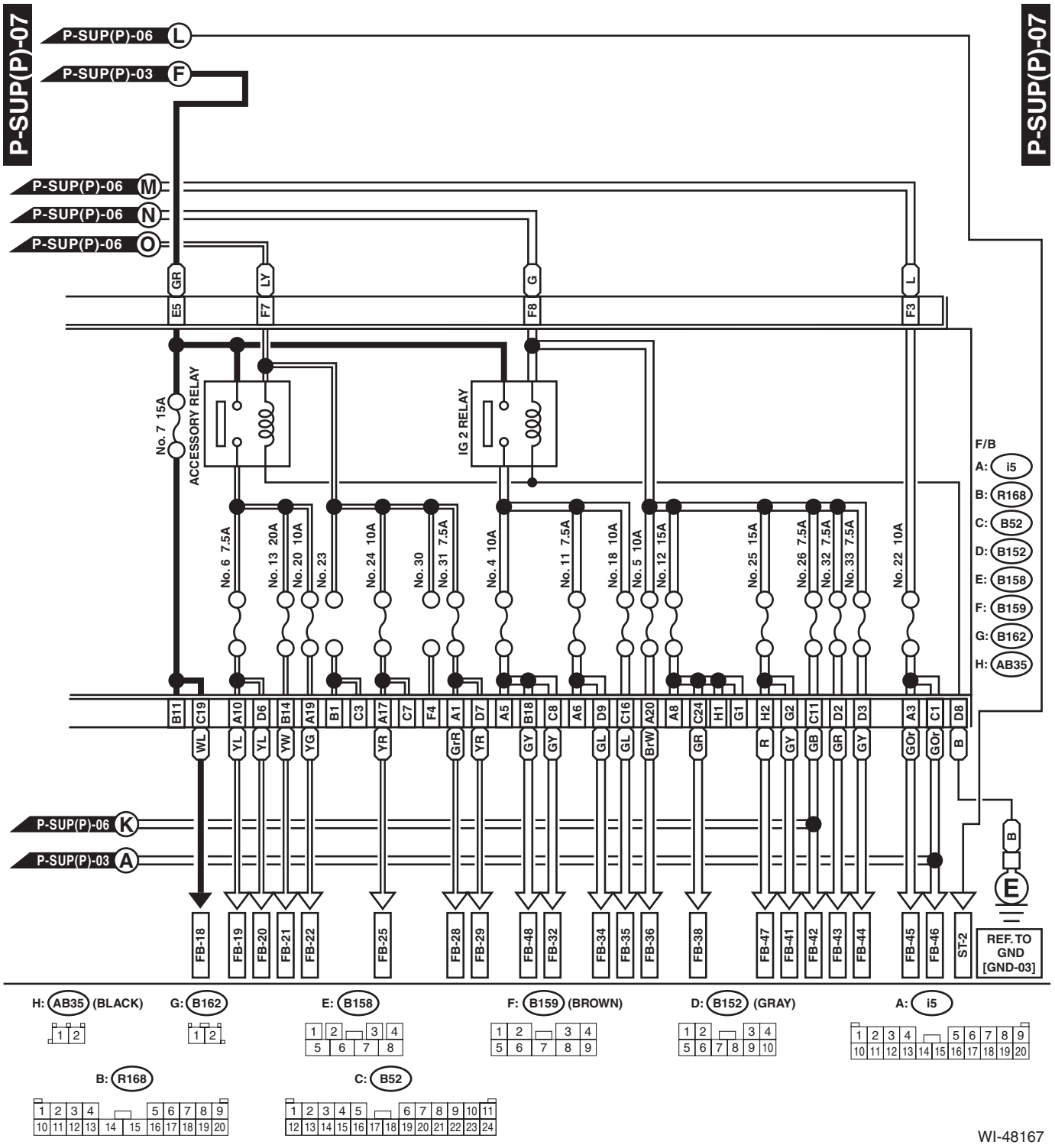

No.	Load
MB-1	VDC CM
MB-2	VDC CM
MB-3	Wiper relay
MB-4	Sub fan relay
MB-5	Mirror heater LH
	Mirror heater RH
	Rear defogger
	A/C control panel
MB-6	Body integrated unit
MB-7	Main fan relay 2
MB-8	Main fan motor
MB-9	ECM
MB-10	Main fan relay 2
MB-11	Main fan relay 2
MB-12	Body integrated unit
MB-13	Body integrated unit
MB-16	Front combination light LH
	Front combination light RH
MB-17	Daytime running light relay
MB-18	Body integrated unit
MB-19	Horn
MB-20	Horn
MB-21	Horn switch
	Body integrated unit
MB-22	A/F, oxygen sensor relay
MB-23	Main relay
	IG relay
MB-24	Electronic throttle control relay
MB-25	Fuel pump relay
MB-26	TCM
	Self shut relay
MB-27	ECM
	Data link connector
MB-28	Turn signal and hazard unit
	Body integrated unit
MB-29	Spot map light
	Room light
	Body integrated unit
	Immobilizer antenna
MB-30	Power window circuit breaker
MB-31	Accessory relay
	IG relay 1
	IG relay 2
MB-32	Tail & illumination relay
	Daytime running light relay
MB-33	Keyless access CM
	ID code box
ALT-1	Combination meter
ALT-2	ECM
ST-2	Starter relay 1

No.	Load
FB-1	Trailer connector
FB-3	Stop light and brake switch
	Brake relay
FB-4	Wiper deicer relay
FB-5	Seat heater relay
FB-6	Body integrated unit
FB-7	Remote engine start CM
FB-8	Blower motor relay
FB-9	Front fog light relay
	Front fog light relay LH
	Front fog light relay RH
FB-10	Audio
	MFD
	Navigation unit
FB-12	Keyless entry CM
	TPMS & keyless entry CM
	Trunk room light (4 door model)
	Luggage room light (5 door model/XV model)
FB-18	Combination meter
	Body integrated unit
	Impact sensor
	Air mix door actuator LH (with left/right independent air conditioner)
	Air mix door actuator RH (with left/right independent air conditioner)
	Mode door actuator
	Air mix door actuator (without left/right independent air conditioner)
	Security CM
	A/C control panel
	Steering lock CM
	Stereo camera
FB-19	Remote control mirror switch
FB-20	Seat heater relay
	Rear view mirror
FB-21	Rear accessory power supply socket
FB-22	Front accessory power supply socket
FB-25	Audio
	Navigation unit
	AUX input terminal
FB-28	A/C control panel
FB-29	Body integrated unit
FB-32	Impact sensor
	Data link connector
	Stop light and brake switch
	Wiper deicer relay
	Sunroof motor assembly
	Sunroof switch
	Sunroof switch (tilt)
	Remote engine start CM

No.	Load
FB-34	Turn signal and hazard unit
FB-35	Inhibitor switch
	Back-up light switch
	Auto headlight beam leveler CM
FB-36	Combination meter
	MFD
FB-38	ECM
	TCM
	Body integrated unit
	Fuel pump relay
	Keyless access CM
	Stereo camera
FB-41	Airbag CM
FB-42	Power window relay
	Wiper relay
FB-43	Steering lock CM
FB-44	VDC CM
	Steering angle sensor
	Power steering CM
FB-45	A/C control panel
FB-46	A/C relay
	Sub fan relay
	Pressure switch
	Blower motor relay
FB-47	Occupant detection control module
FB-48	TPMS CM
BAT-1	Power steering CM

4. Ground Circuit

A: WIRING DIAGRAM

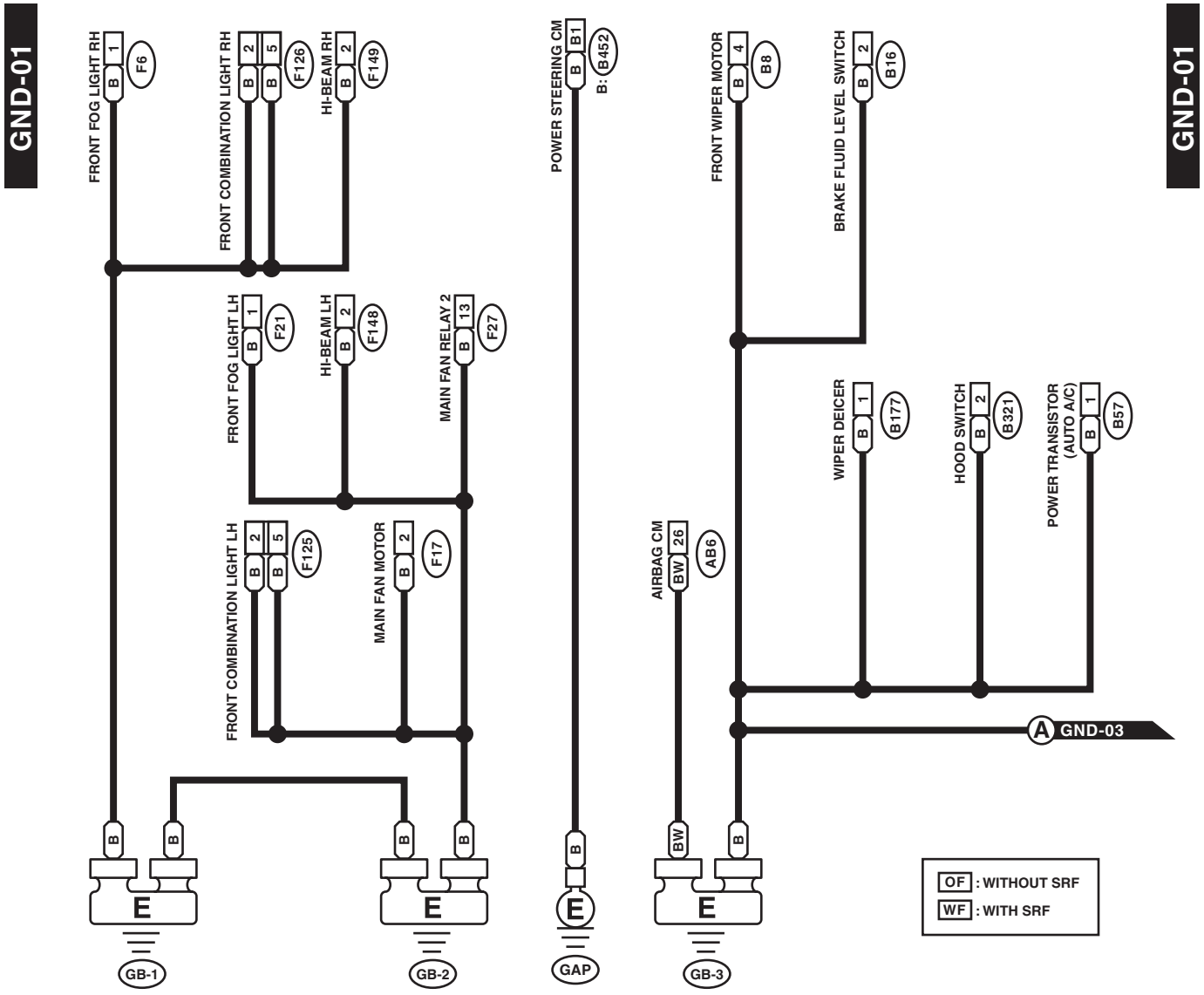

WI-48168

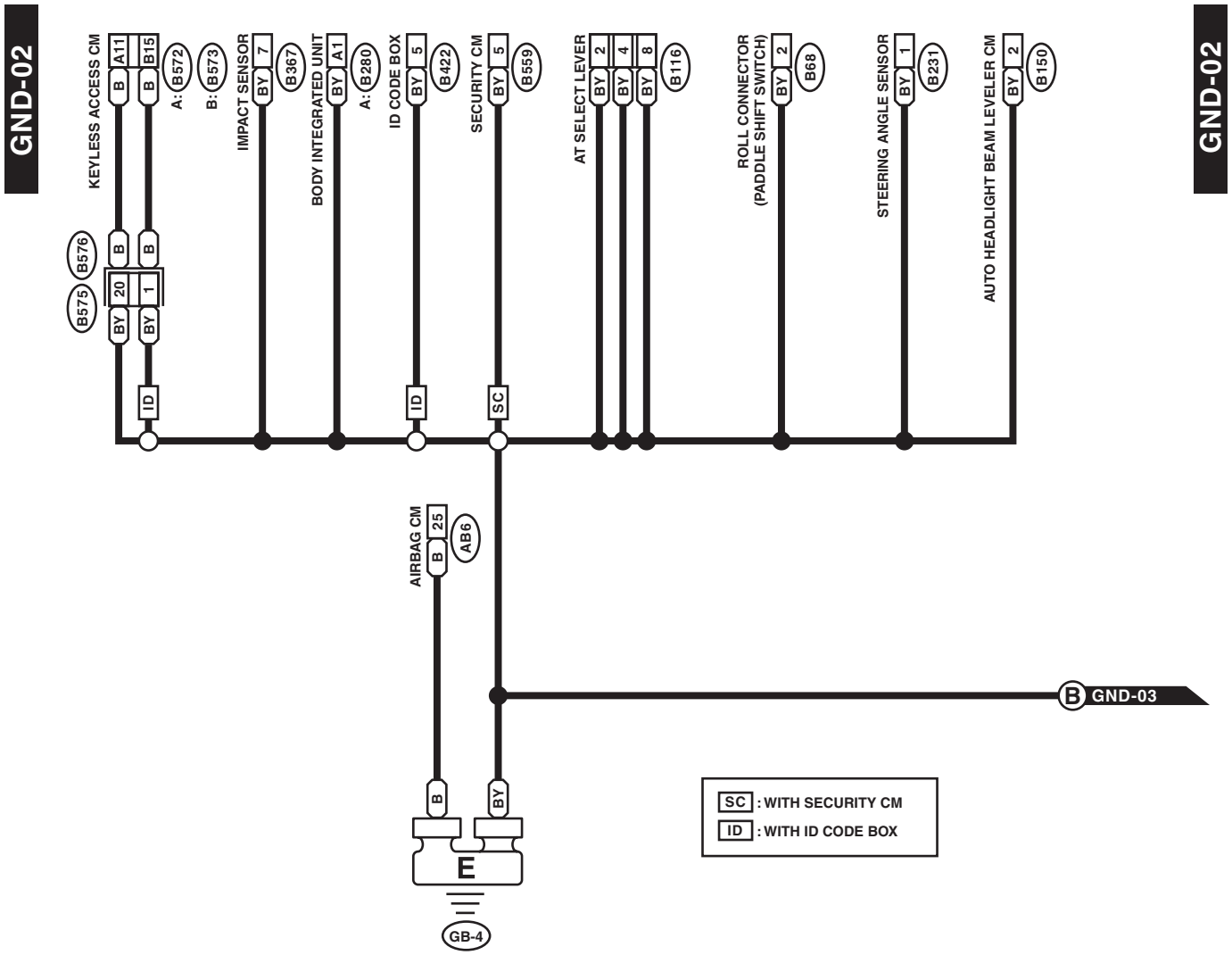
GND-02
GND-02
KEYLESS ACCESS CM
IMPACT SENSOR
BODY INTEGRATED UNIT
ID CODE BOX
SECURITY CM
AT SELECT LEVER
ROLL CONNECTOR (PADDLE SHIFT SWITCH)
STEERING ANGLE SENSOR
AUTO HEADLIGHT BEAM LEVELER CM
AIRBAG CM
B GND-03
SC : WITH SECURITY CM
ID : WITH ID CODE BOX
E
GB-4

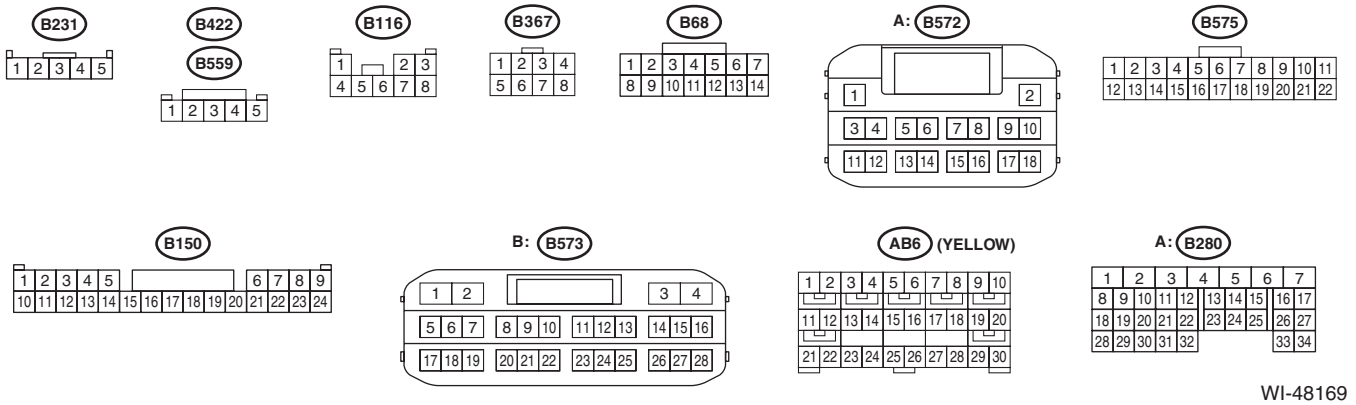
B231
B422
B559
B116
B367
B68
A: B572
B575
B150
B: B573
AB6 (YELLOW)
A: B280

WI-48169

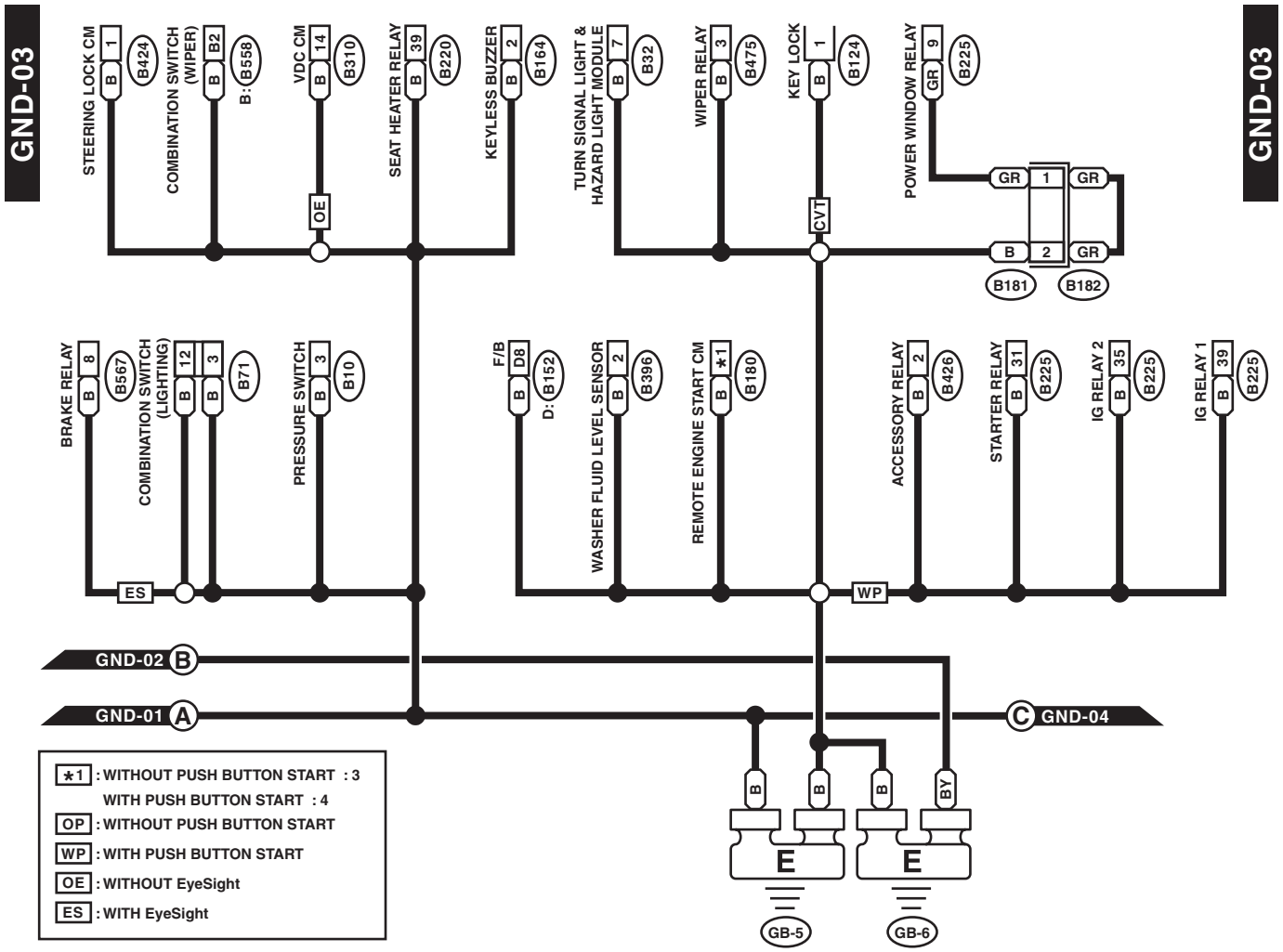
GND-03
GND-03
STEERING LOCK CM
COMBINATION SWITCH (WIPER)
B: B558
VDC CM
SEAT HEATER RELAY
KEYLESS BUZZER
TURN SIGNAL LIGHT & HAZARD LIGHT MODULE
WIPER RELAY
KEY LOCK
POWER WINDOW RELAY
OE
CVT
B181
B182
BRAKE RELAY
COMBINATION SWITCH (LIGHTING)
PRESSURE SWITCH
F/B
D: B152
WASHER FLUID LEVEL SENSOR
REMOTE ENGINE START CM
ACCESSORY RELAY
STARTER RELAY
IG RELAY 2
IG RELAY 1
ES
WP
GND-02 B
GND-01 A
C GND-04
*1 : WITHOUT PUSH BUTTON START : 3
WITH PUSH BUTTON START : 4
OP : WITHOUT PUSH BUTTON START
WP : WITH PUSH BUTTON START
OE : WITHOUT EyeSight
ES : WITH EyeSight
E
E
GB-5
GB-6

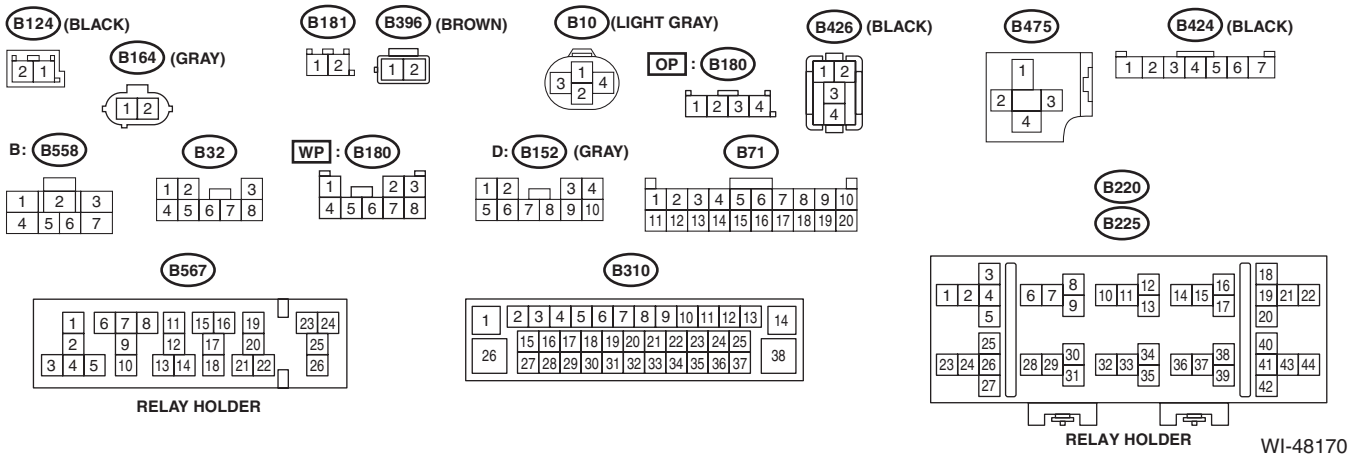
B124 (BLACK)
B164 (GRAY)
B181
B396 (BROWN)
B10 (LIGHT GRAY)
OP : B180
B426 (BLACK)
B475
B424 (BLACK)
B: B558
B32
WP : B180
D: B152 (GRAY)
B71
B567
B310
B220
B225
RELAY HOLDER
RELAY HOLDER
WI-48170

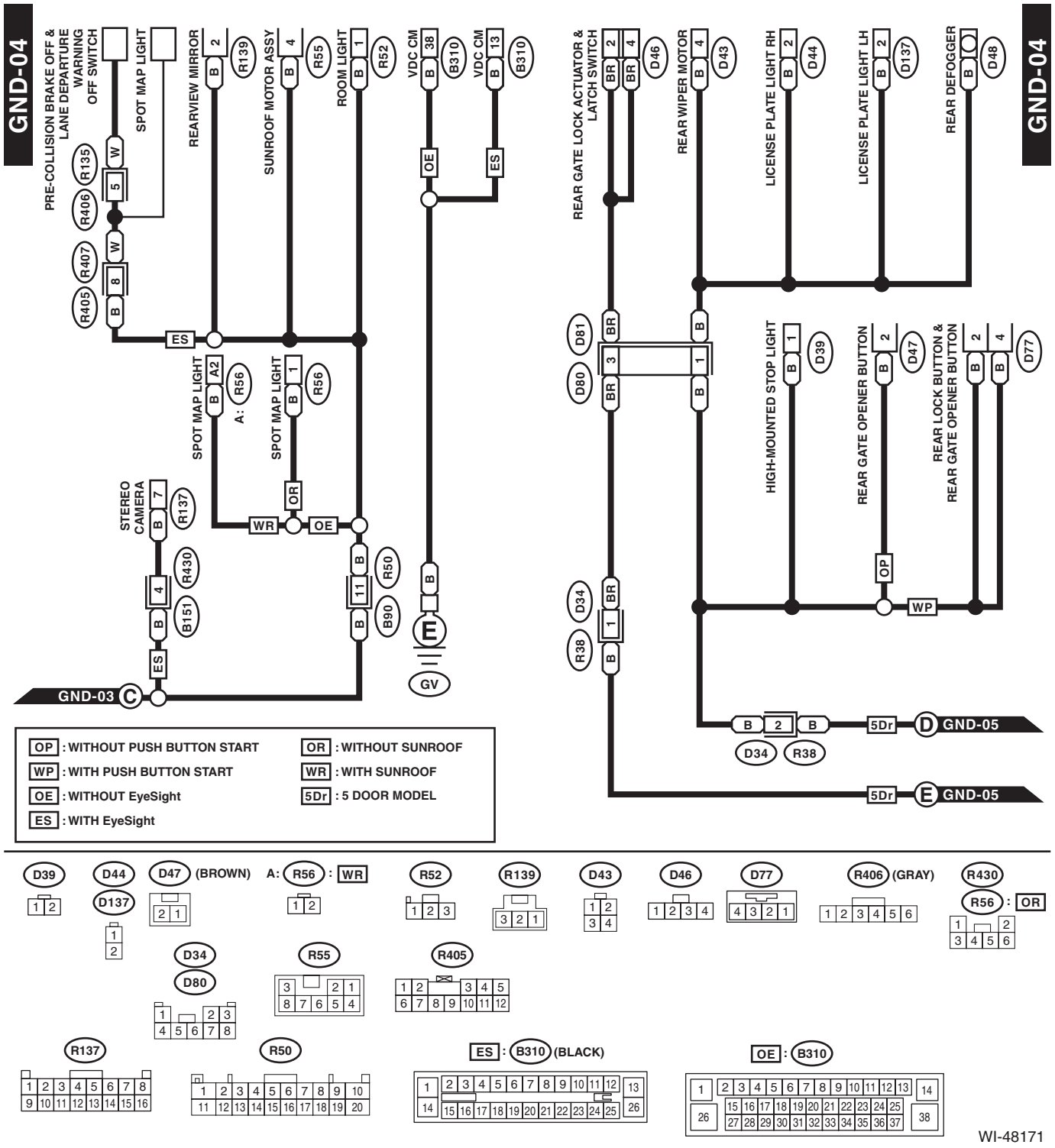
GND-04
PRE-COLLISION BRAKE OFF & LANE DEPARTURE WARNING OFF SWITCH
SPOT MAP LIGHT
REARVIEW MIRROR
SUNROOF MOTOR ASSY
ROOM LIGHT
VDC CM
VDC CM
REAR GATE LOCK ACTUATOR & LATCH SWITCH
REAR WIPER MOTOR
LICENSE PLATE LIGHT RH
LICENSE PLATE LIGHT LH
REAR DEFOGGER
SPOT MAP LIGHT
A:
SPOT MAP LIGHT
STEREO CAMERA
HIGH-MOUNTED STOP LIGHT
REAR GATE OPENER BUTTON
REAR LOCK BUTTON & REAR GATE OPENER BUTTON
GND-03
GND-05
GND-05
OP : WITHOUT PUSH BUTTON START
WP : WITH PUSH BUTTON START
OE : WITHOUT EyeSight
ES : WITH EyeSight
OR : WITHOUT SUNROOF
WR : WITH SUNROOF
5Dr : 5 DOOR MODEL
D39
D44
D137
D47 (BROWN)
A: R56 : WR
R52
R139
D43
D46
D77
R406 (GRAY)
R430
R56 : OR
D34
D80
R55
R405
R137
R50
ES : B310 (BLACK)
OE : B310
WI-48171

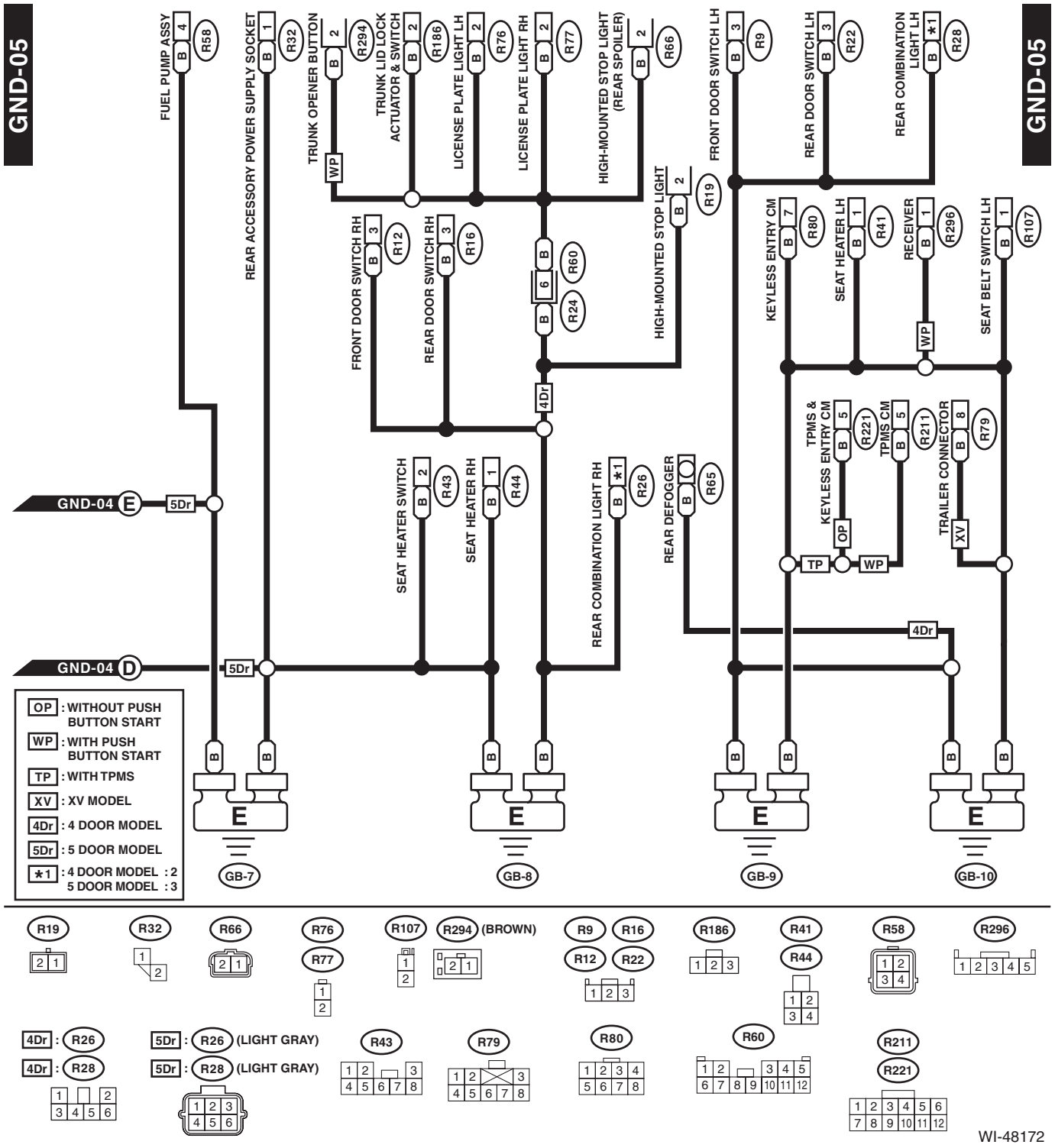
GND-05
GND-05
FUEL PUMP ASSY
REAR ACCESSORY POWER SUPPLY SOCKET
TRUNK OPENER BUTTON
TRUNK LID LOCK ACTUATOR & SWITCH
LICENSE PLATE LIGHT LH
LICENSE PLATE LIGHT RH
HIGH-MOUNTED STOP LIGHT (REAR SPOILER)
HIGH-MOUNTED STOP LIGHT
FRONT DOOR SWITCH LH
REAR DOOR SWITCH LH
REAR COMBINATION LIGHT LH
FRONT DOOR SWITCH RH
REAR DOOR SWITCH RH
KEYLESS ENTRY CM
SEAT HEATER LH
RECEIVER
SEAT BELT SWITCH LH
TPMS & KEYLESS ENTRY CM
TPMS CM
TRAILER CONNECTOR
SEAT HEATER SWITCH
SEAT HEATER RH
REAR COMBINATION LIGHT RH
REAR DEFOGGER
GND-04 E
GND-04 D
5Dr
4Dr
WP
OP
TP
XV
GB-7
GB-8
GB-9
GB-10
OP : WITHOUT PUSH BUTTON START
WP : WITH PUSH BUTTON START
TP : WITH TPMS
XV : XV MODEL
4Dr : 4 DOOR MODEL
5Dr : 5 DOOR MODEL
*1 : 4 DOOR MODEL : 2
5 DOOR MODEL : 3
R19
R32
R66
R76
R77
R107
R294 (BROWN)
R9
R16
R12
R22
R186
R41
R44
R58
R296
4Dr : R26
4Dr : R28
5Dr : R26 (LIGHT GRAY)
5Dr : R28 (LIGHT GRAY)
R43
R79
R80
R60
R211
R221
WI-48172

Ground Circuit

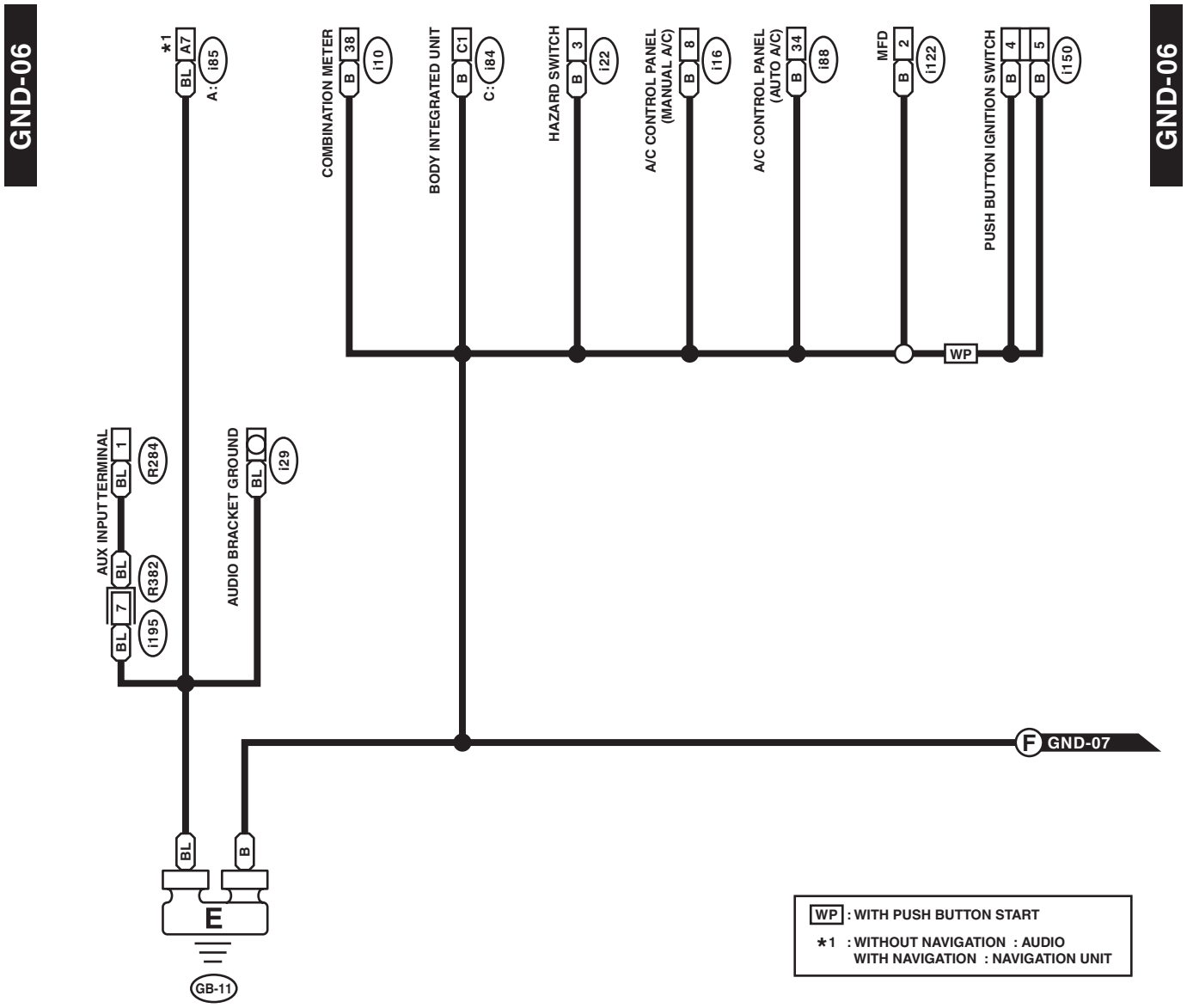

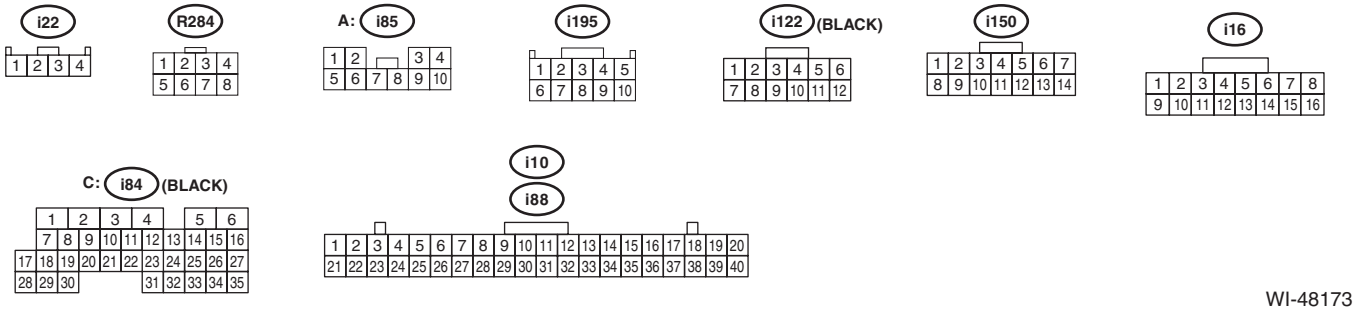

WI-48173

Ground Circuit

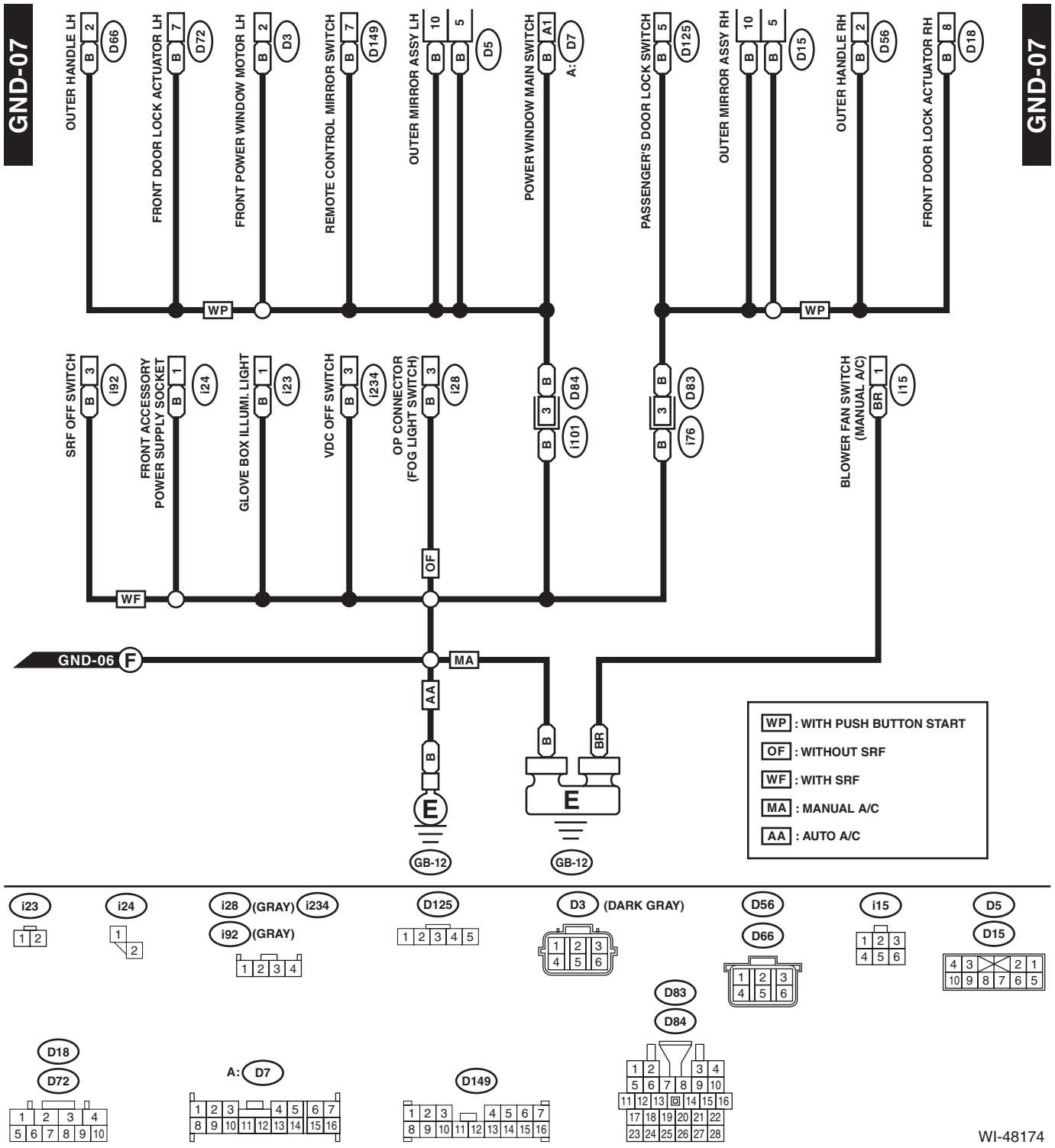

5. Airbag System

A: WIRING DIAGRAM

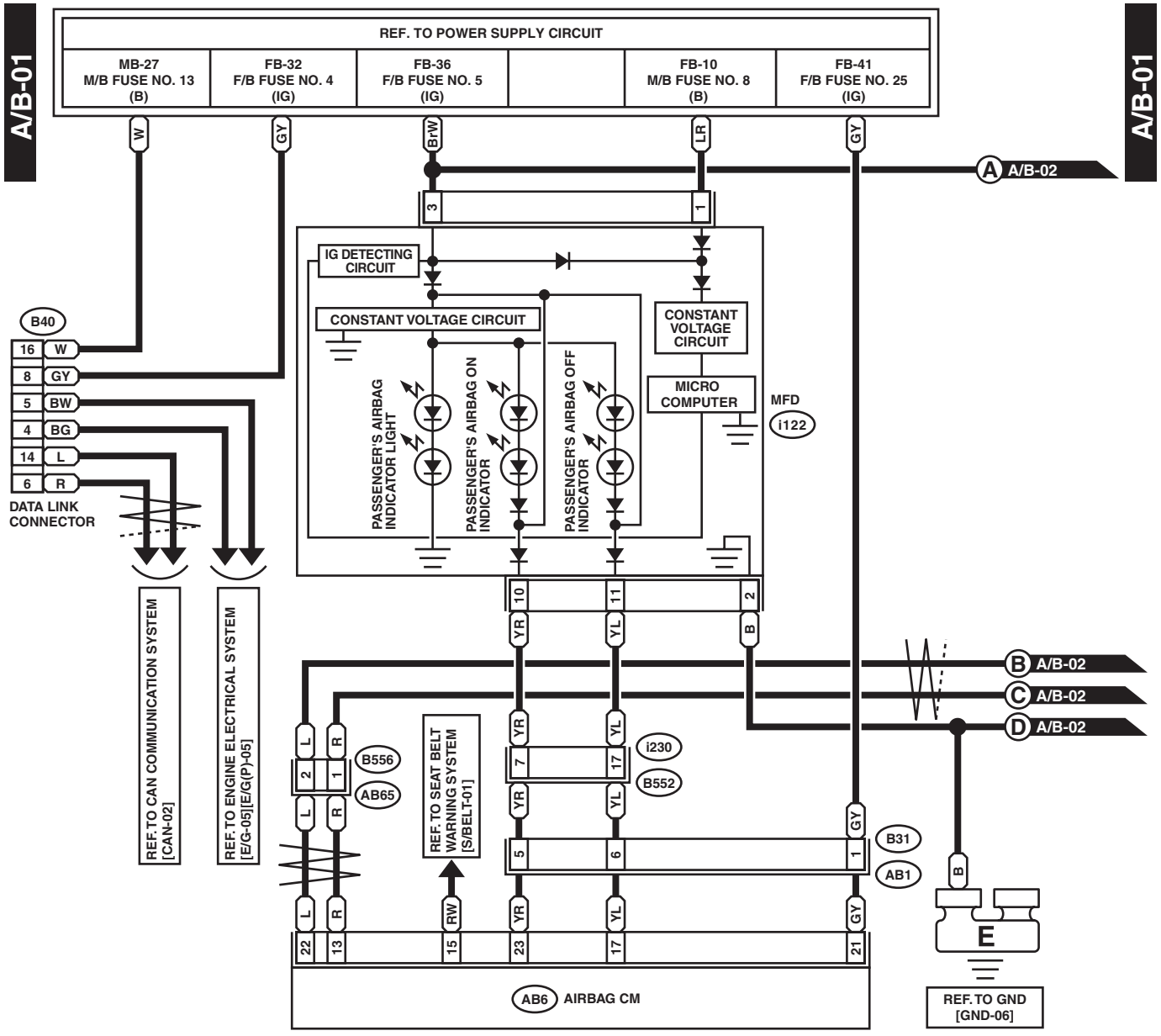

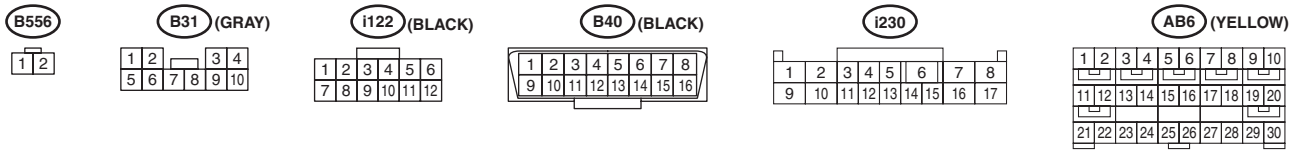

WI-48175

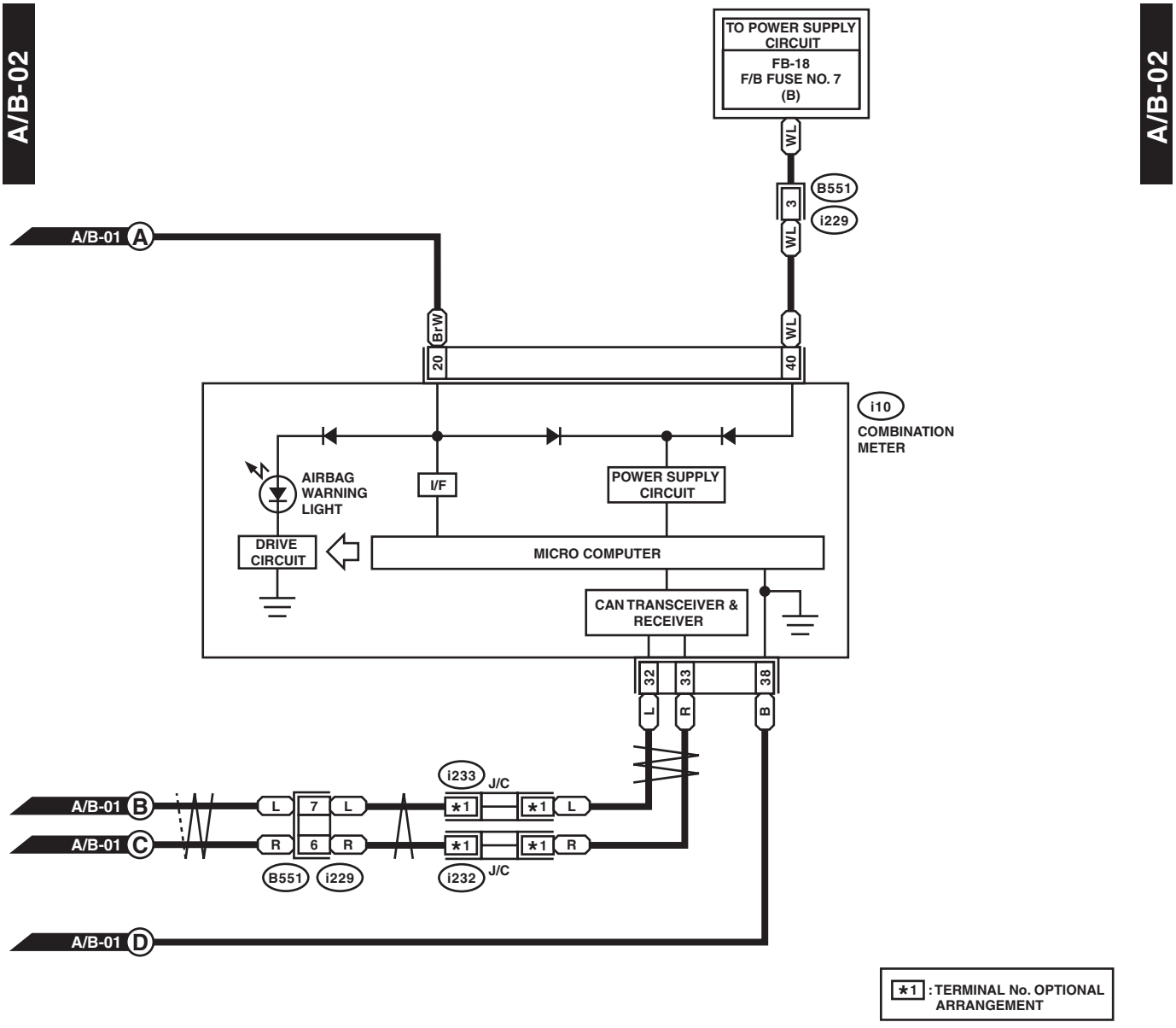
A/B-02
A/B-02
TO POWER SUPPLY CIRCUIT
FB-18
F/B FUSE NO. 7
(B)
WL
B551
3
i229
WL
A/B-01 A
BrW
WL
20
40
i10
COMBINATION METER
AIRBAG WARNING LIGHT
I/F
POWER SUPPLY CIRCUIT
DRIVE CIRCUIT
MICRO COMPUTER
CAN TRANSCEIVER & RECEIVER
32
33
38
L
R
B
i233
J/C
A/B-01 B
L
7
L
*1
*1
L
A/B-01 C
R
6
R
*1
*1
R
B551
i229
i232
J/C
A/B-01 D
*1 : TERMINAL No. OPTIONAL ARRANGEMENT

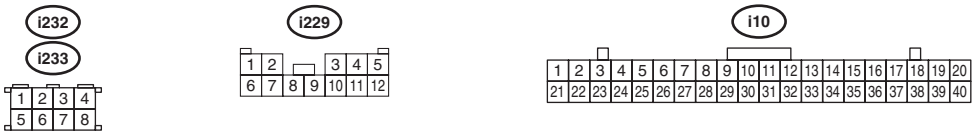
i232
i233
1 2 3 4
5 6 7 8
i229
1 2
6 7 8 9
3 4 5
10 11 12
i10
1 2 3 4 5 6 7 8 9 10 11 12 13 14 15 16 17 18 19 20
21 22 23 24 25 26 27 28 29 30 31 32 33 34 35 36 37 38 39 40

WI-34148

WIRING SYSTEM

A/B-03

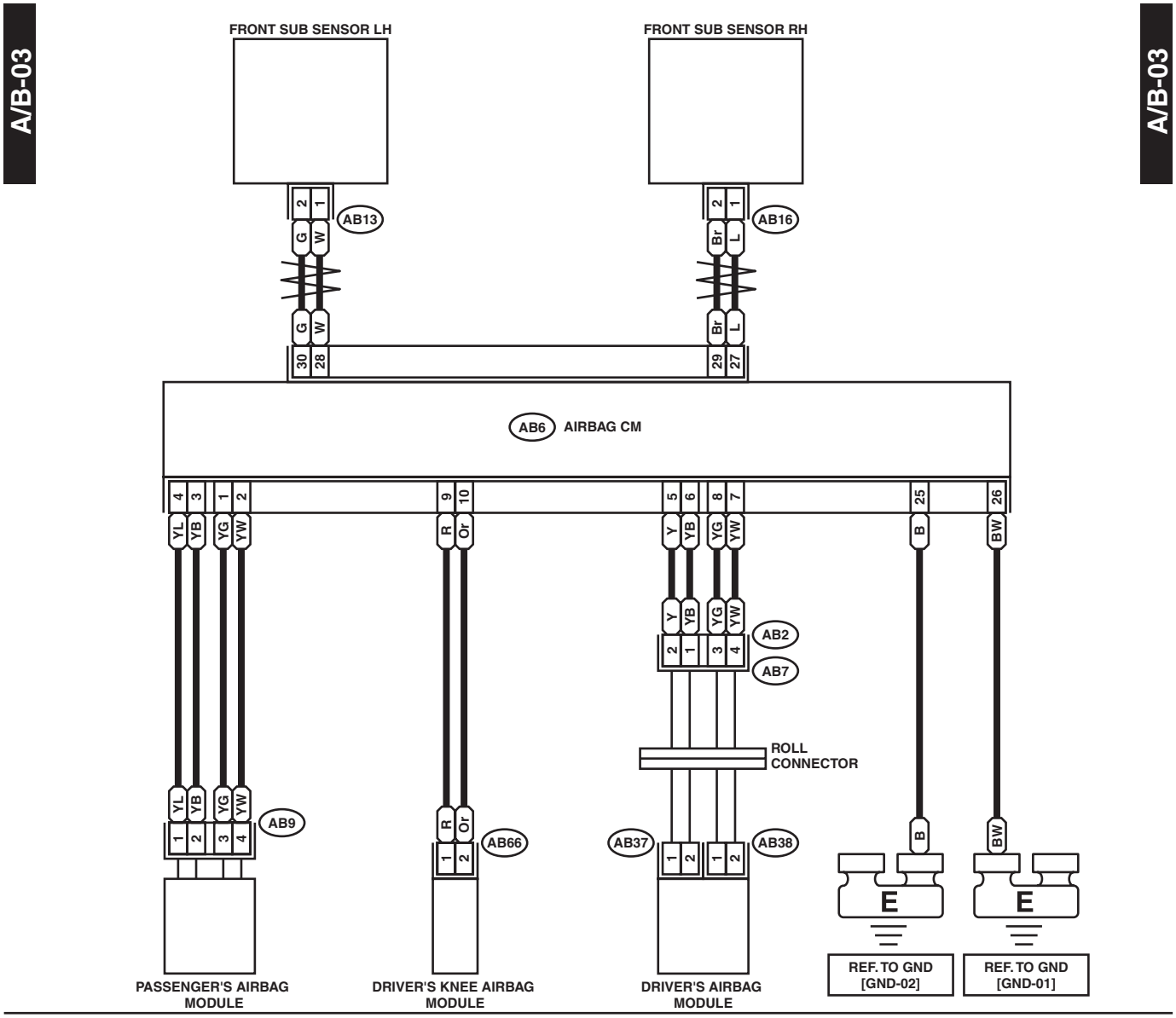

WI-48728

A/B-04

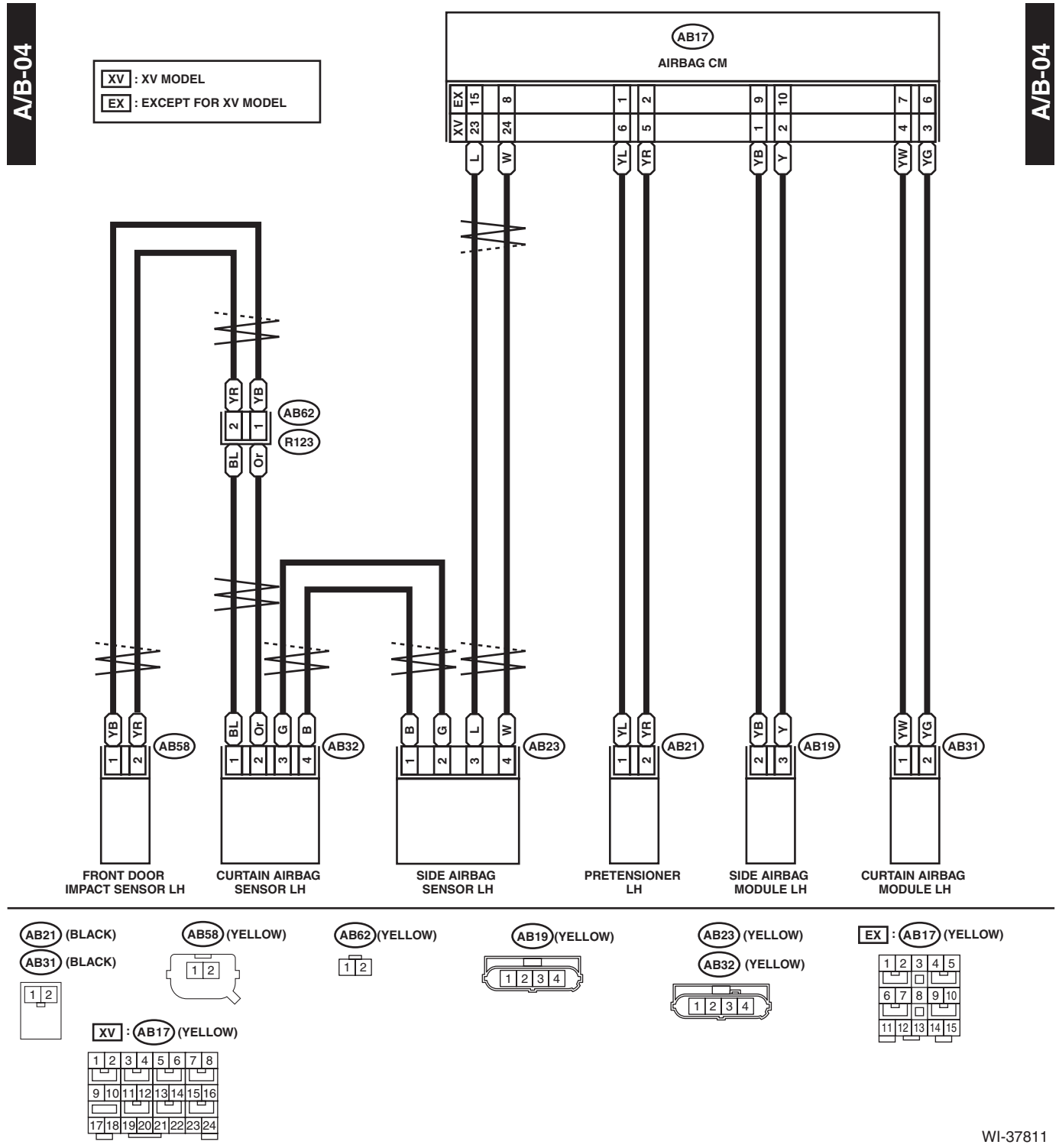

WI-37811

WIRING SYSTEM

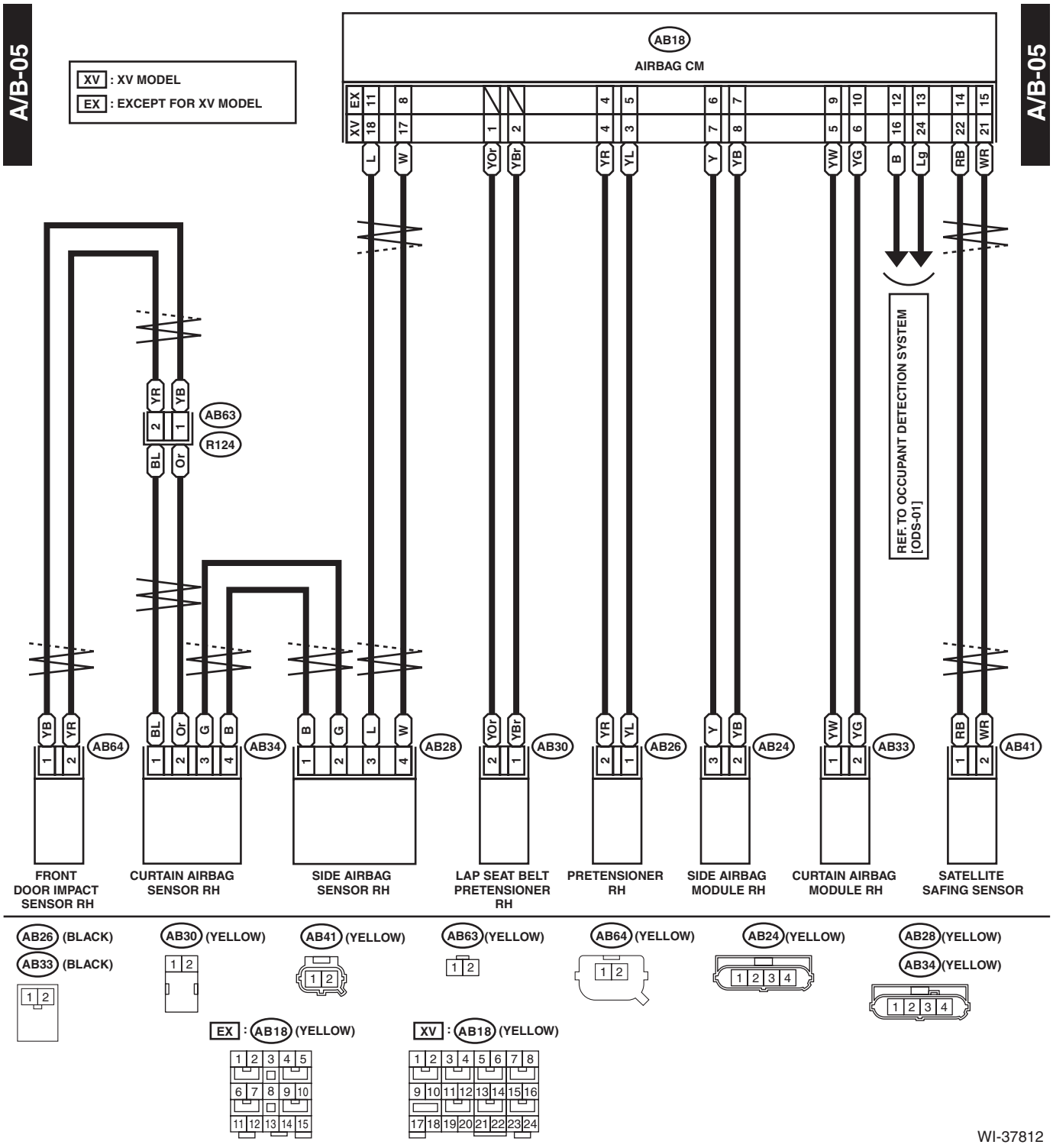

6. Air Conditioning System

A: WIRING DIAGRAM

1. MANUAL A/C MODEL

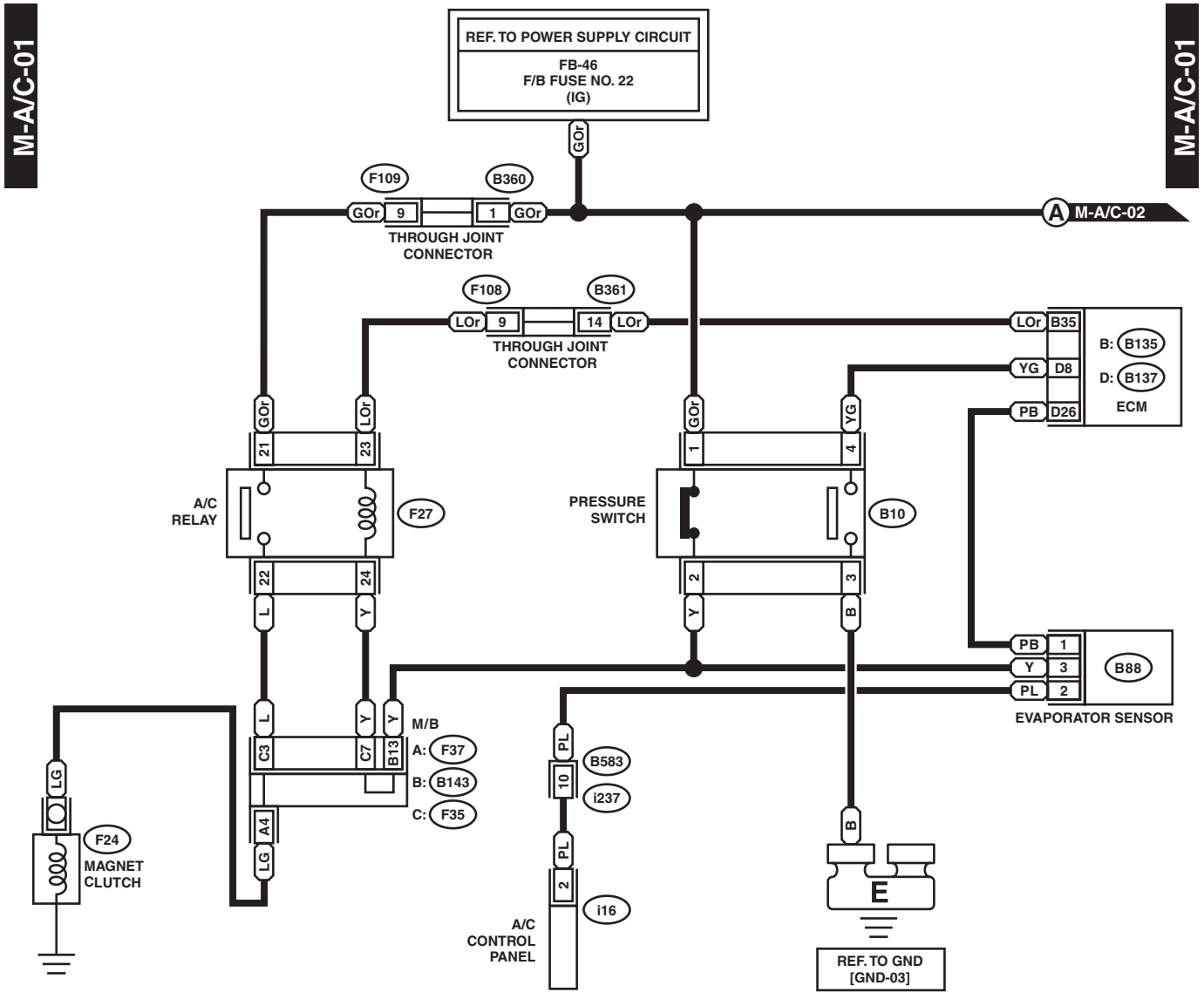

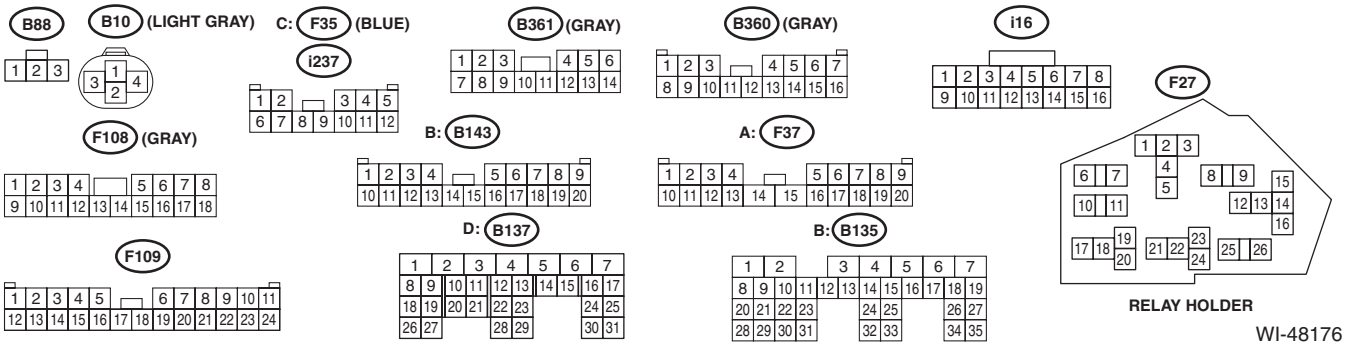

WI-48176

WIRING SYSTEM

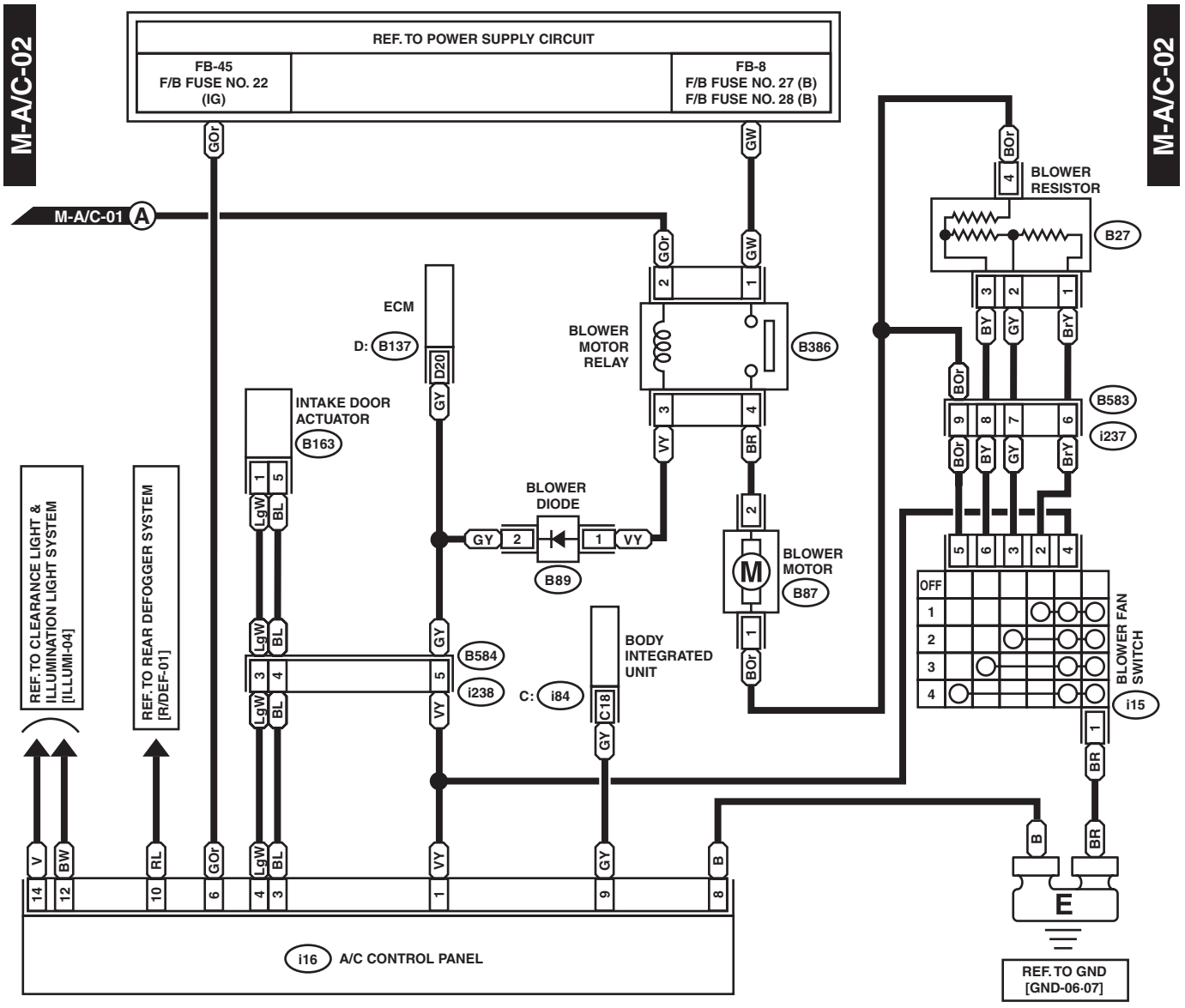

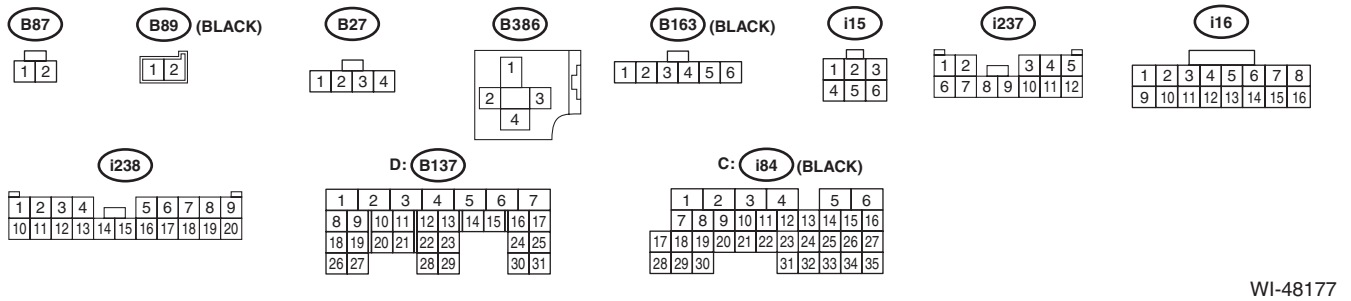

WI-48177

2. AUTO A/C MODEL

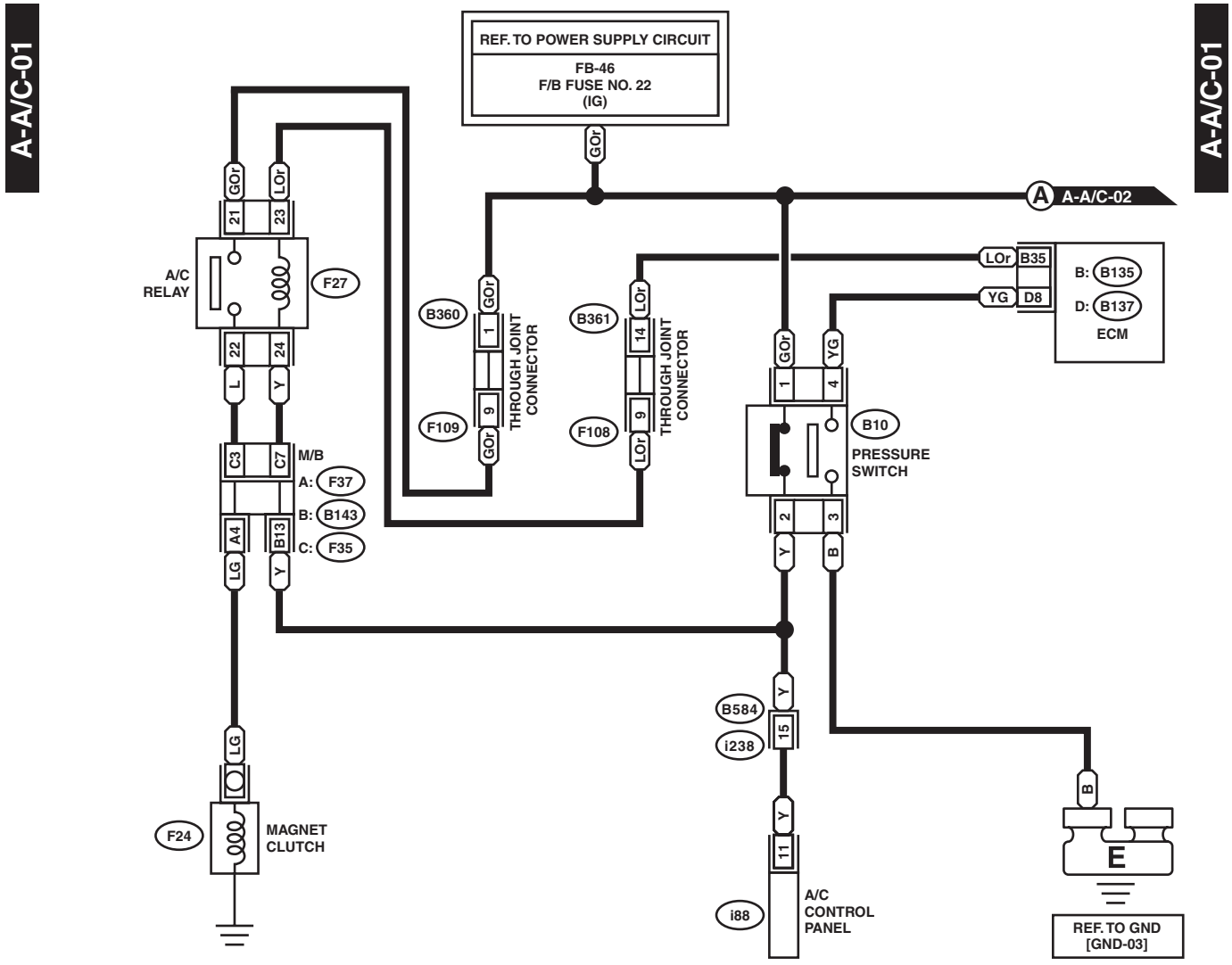

WI-48178

WIRING SYSTEM

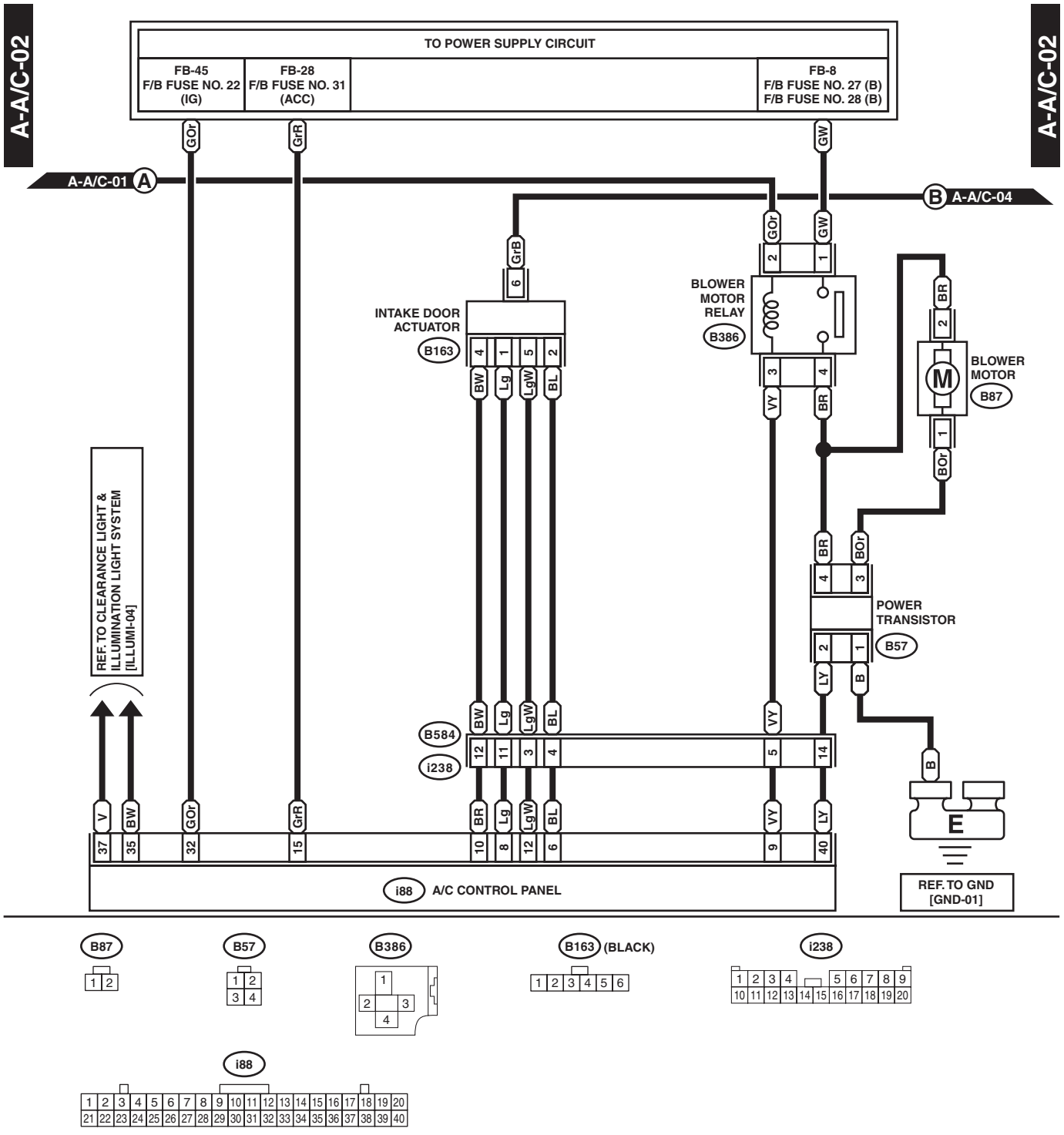

WI-34155

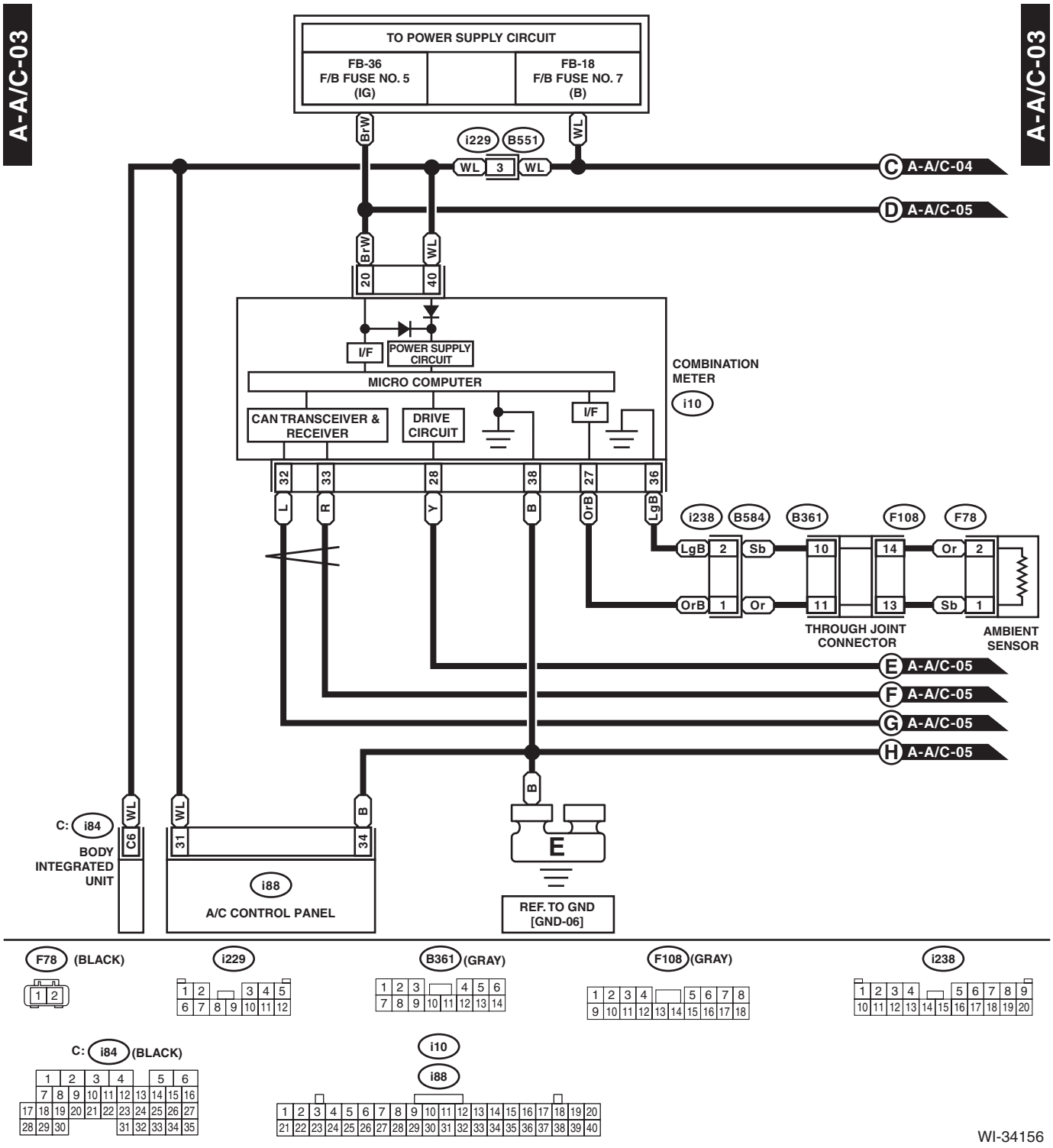
A-A/C-03
A-A/C-03
TO POWER SUPPLY CIRCUIT
FB-36
F/B FUSE NO. 5
(IG)
FB-18
F/B FUSE NO. 7
(B)
BrW
WL
i229
B551
WL
3
WL
C A-A/C-04
D A-A/C-05
BrW
WL
20
40
I/F
POWER SUPPLY CIRCUIT
MICRO COMPUTER
CAN TRANSCEIVER & RECEIVER
DRIVE CIRCUIT
I/F
COMBINATION METER
i10
32
33
28
38
27
36
L
R
Y
B
OrB
LgB
i238
B584
B361
F108
F78
LgB
2
Sb
10
14
Or
2
OrB
1
Or
11
13
Sb
1
THROUGH JOINT CONNECTOR
AMBIENT SENSOR
E A-A/C-05
F A-A/C-05
G A-A/C-05
H A-A/C-05
B
C: i84
WL
C6
BODY INTEGRATED UNIT
WL
31
B
34
i88
A/C CONTROL PANEL
E
REF. TO GND [GND-06]

F78 (BLACK)
i229
B361 (GRAY)
F108 (GRAY)
i238
C: i84 (BLACK)
i10
i88

WI-34156

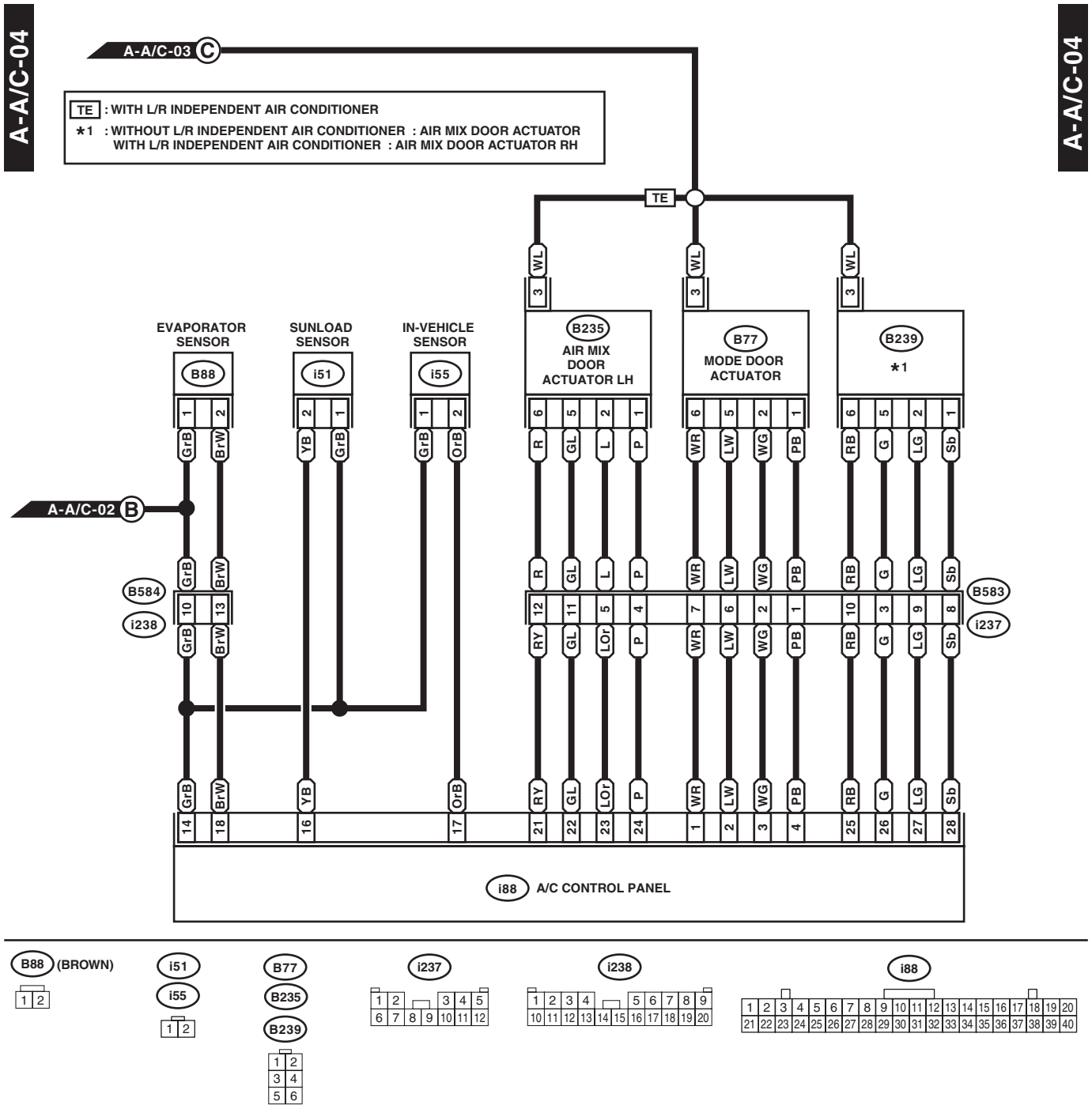
A-A/C-04
A-A/C-04
A-A/C-03 C
TE : WITH L/R INDEPENDENT AIR CONDITIONER
*1 : WITHOUT L/R INDEPENDENT AIR CONDITIONER : AIR MIX DOOR ACTUATOR
WITH L/R INDEPENDENT AIR CONDITIONER : AIR MIX DOOR ACTUATOR RH
TE
EVAPORATOR SENSOR
B88
SUNLOAD SENSOR
i51
IN-VEHICLE SENSOR
i55
B235
AIR MIX DOOR ACTUATOR LH
B77
MODE DOOR ACTUATOR
B239
*1
A-A/C-02 B
B584
i238
B583
i237
i88 A/C CONTROL PANEL

B88 (BROWN)
i51
i55
B77
B235
B239
i237
i238
i88

WI-34157

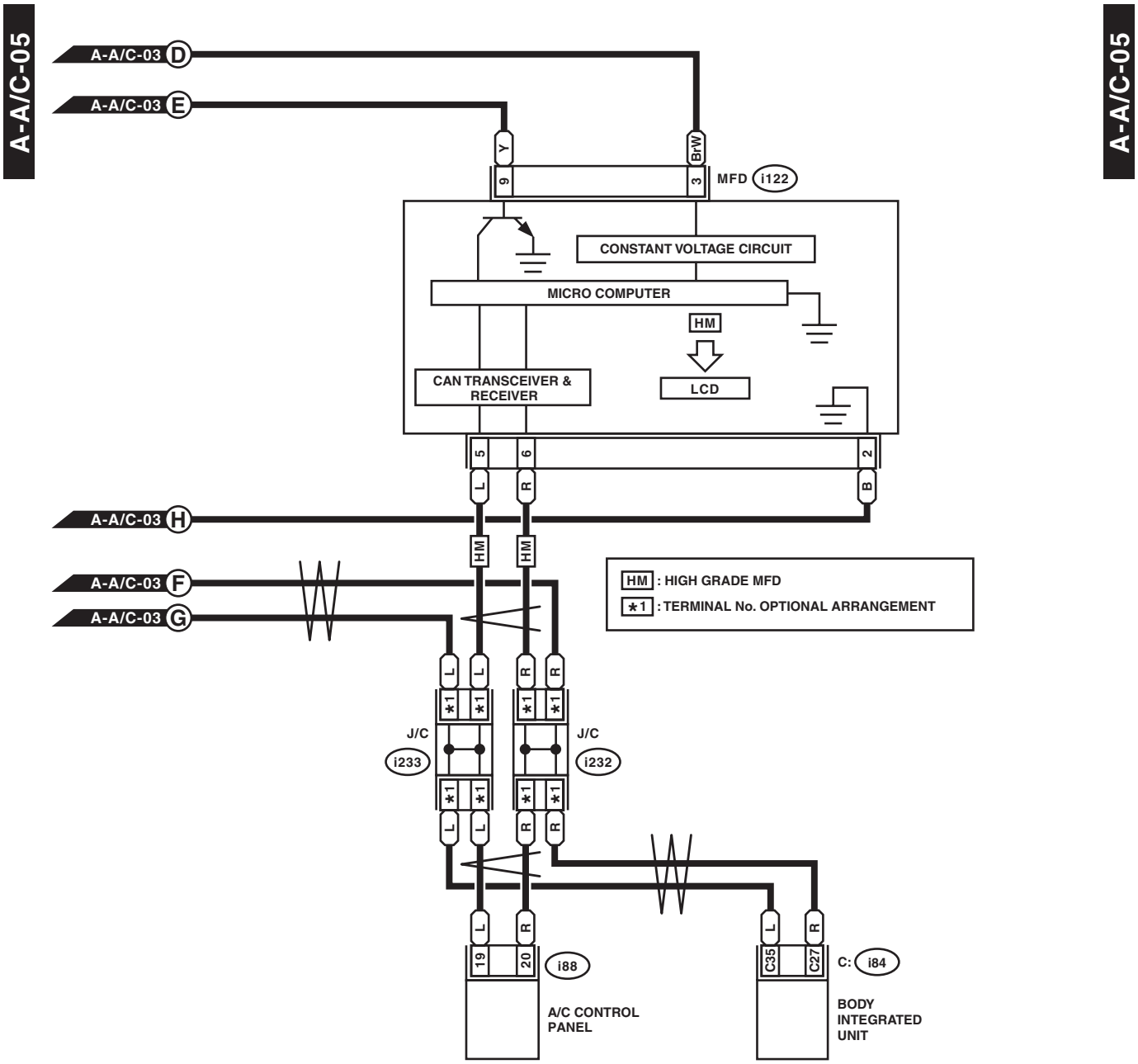
A-A/C-05
A-A/C-03 D
A-A/C-03 E
Y
Br-W
9
3
MFD i122
CONSTANT VOLTAGE CIRCUIT
MICRO COMPUTER
HM
LCD
CAN TRANSCEIVER & RECEIVER
5
6
2
L
R
B
A-A/C-03 H
HM
HM
A-A/C-03 F
A-A/C-03 G
HM : HIGH GRADE MFD
*1 : TERMINAL No. OPTIONAL ARRANGEMENT
L
R
*1
J/C
i233
J/C
i232
19
20
i88
A/C CONTROL PANEL
C35
C27
C: i84
BODY INTEGRATED UNIT
i232
i233
i122 (BLACK)
C: i84 (BLACK)
i88

WI-48179

7. Audio System

A: WIRING DIAGRAM

1. 6.2 INCH DISPLAY (WITHOUT EyeSight)

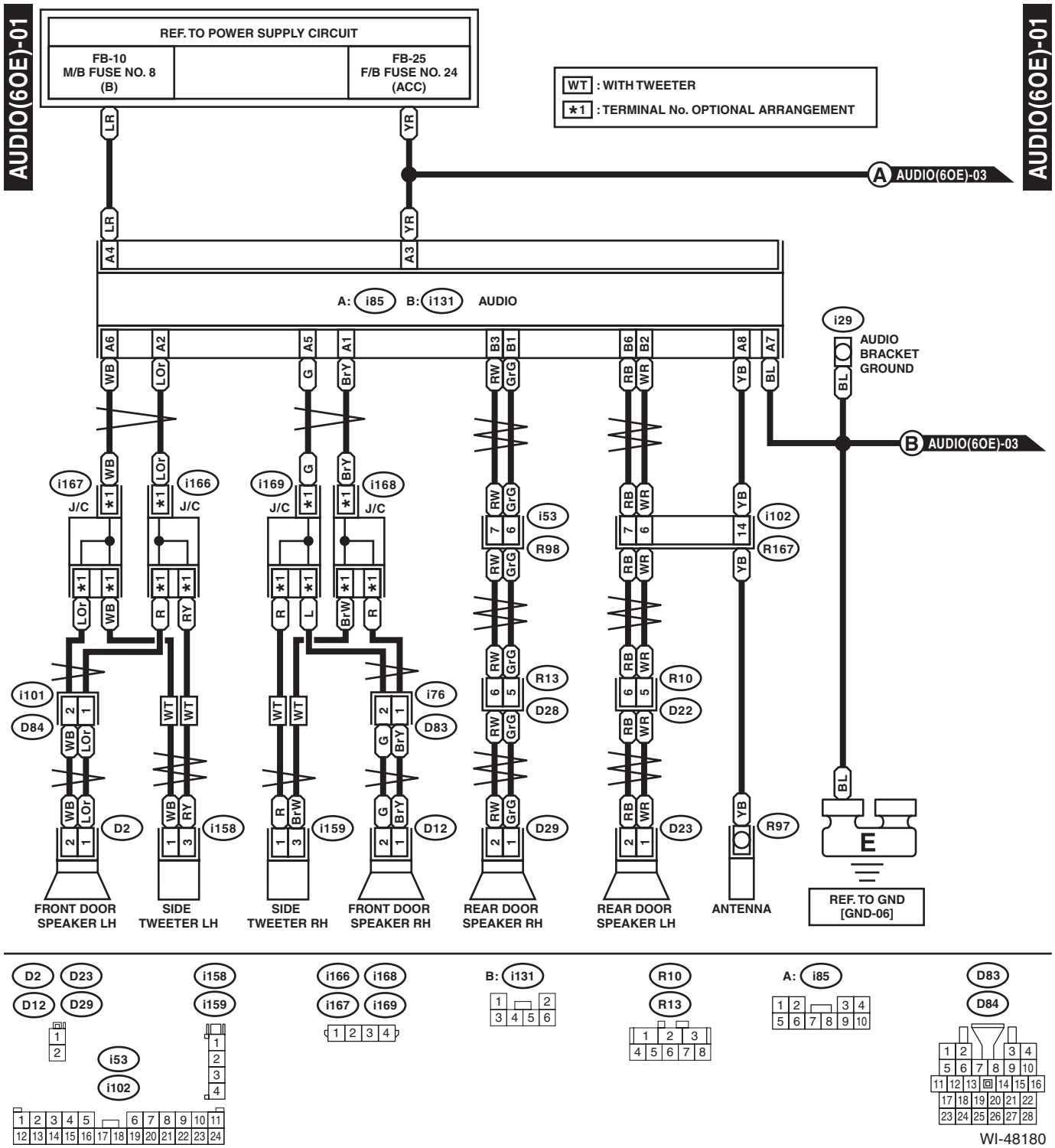

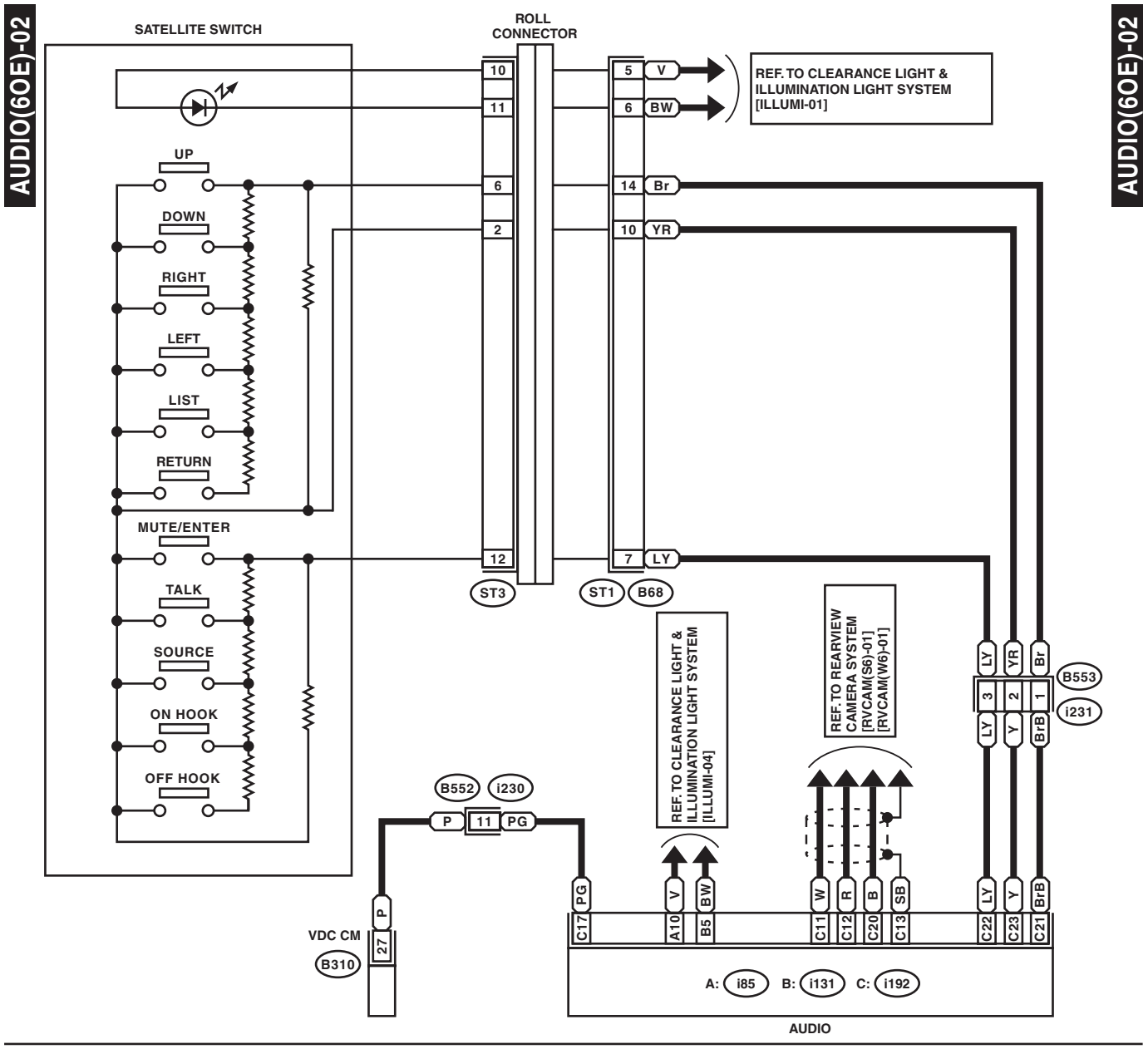
AUDIO(6OE)-02
SATELLITE SWITCH
ROLL CONNECTOR
UP
DOWN
RIGHT
LEFT
LIST
RETURN
MUTE/ENTER
TALK
SOURCE
ON HOOK
OFF HOOK
10
11
6
2
12
5 V
6 BW
14 Br
10 YR
7 LY
REF. TO CLEARANCE LIGHT & ILLUMINATION LIGHT SYSTEM [ILLUMI-01]
ST3
ST1 B68
REF. TO CLEARANCE LIGHT & ILLUMINATION LIGHT SYSTEM [ILLUMI-04]
REF. TO REARVIEW CAMERA SYSTEM [RVCAM(S6)-01] [RVCAM(W6)-01]
B553
i231
B552 i230
P 11 PG
VDC CM
B310
27 P
C17 PG
A10 V
B5 BW
C11 W
C12 R
C20 B
C13 SB
C22 LY
C23 Y
C21 BrB
A: i85 B: i131 C: i192
AUDIO

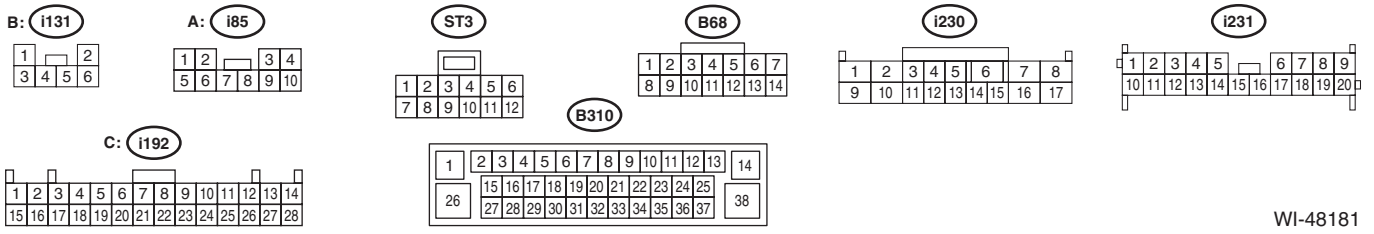
B: i131
A: i85
ST3
B68
i230
i231
C: i192
B310
WI-48181

WIRING SYSTEM

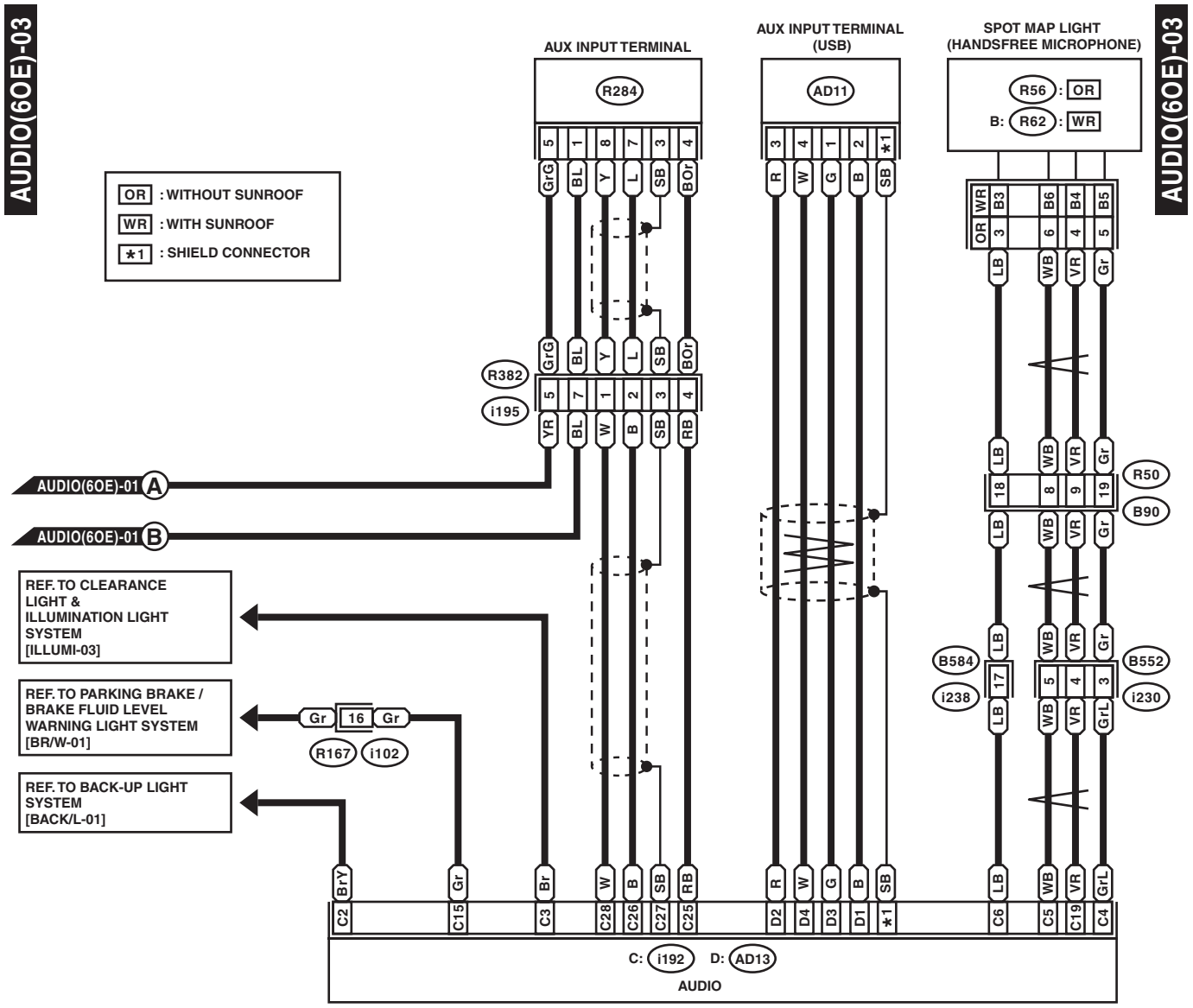

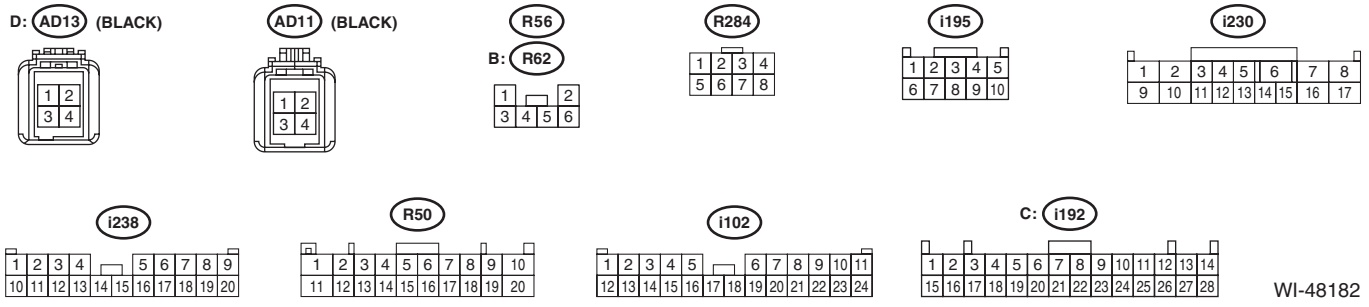

WI-48182

2. 6.2 INCH DISPLAY (WITH EyeSight)

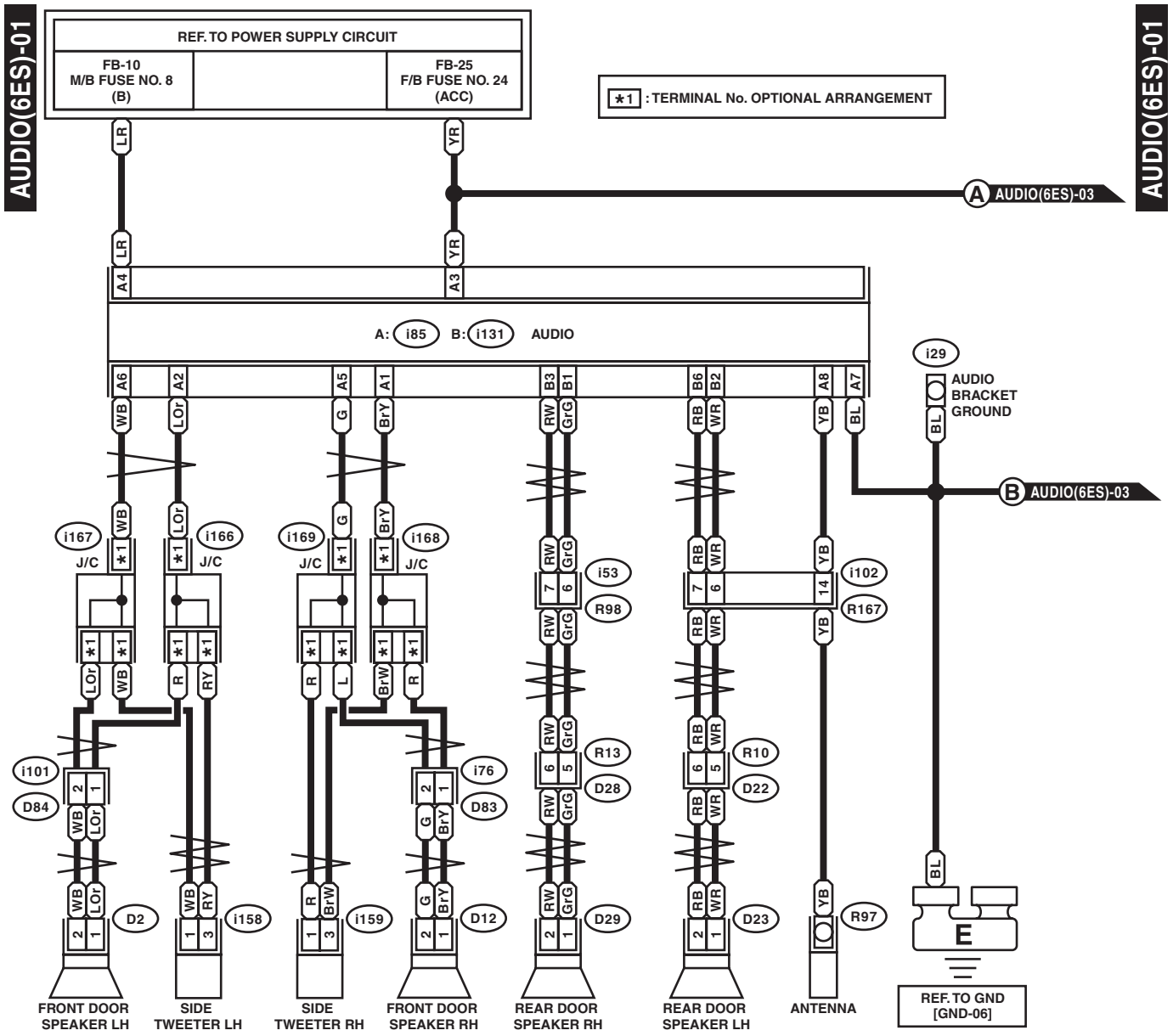

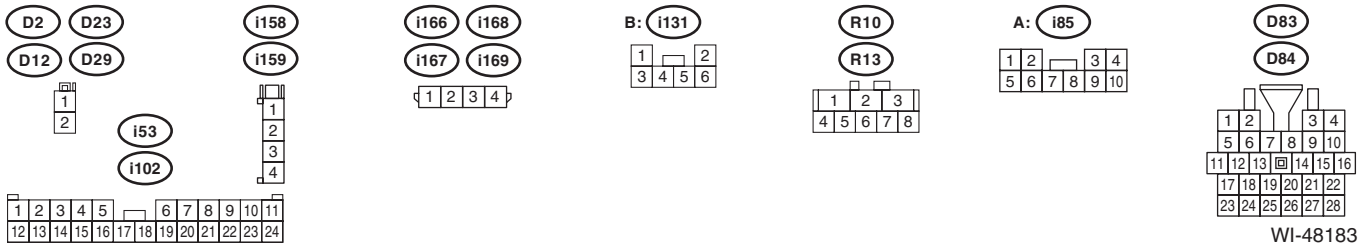

WI-48183

WIRING SYSTEM

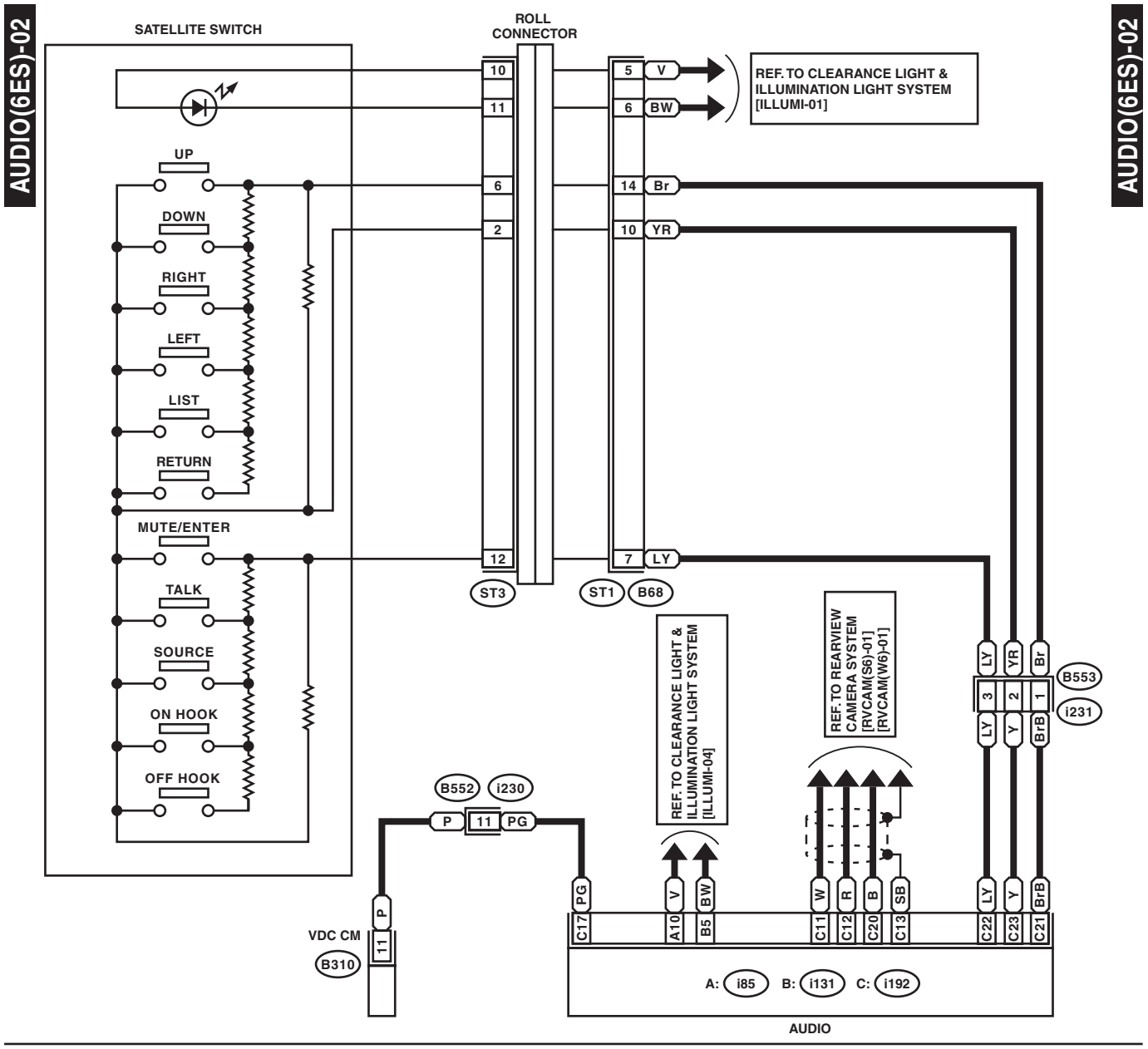

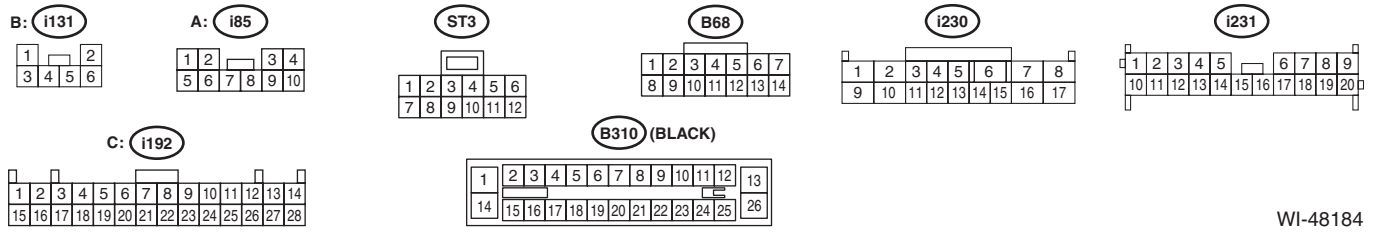

WI-48184

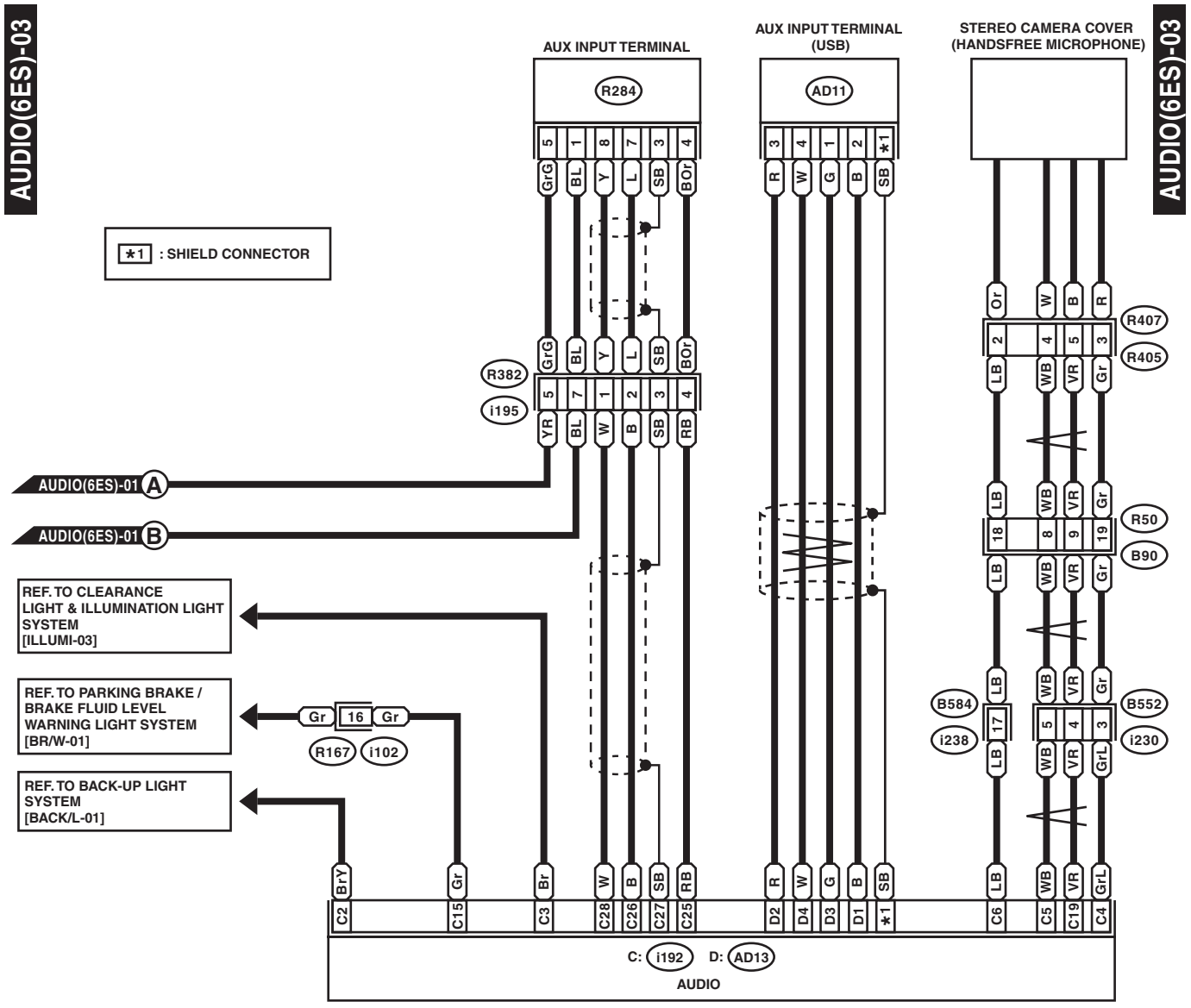
AUDIO(6ES)-03
AUDIO(6ES)-03
AUX INPUT TERMINAL
AUX INPUT TERMINAL (USB)
STEREO CAMERA COVER (HANDSFREE MICROPHONE)
R284
AD11
*1 : SHIELD CONNECTOR
R382
i195
R407
R405
R50
B90
B584
i238
B552
i230
AUDIO(6ES)-01 A
AUDIO(6ES)-01 B
REF. TO CLEARANCE LIGHT & ILLUMINATION LIGHT SYSTEM [ILLUMI-03]
REF. TO PARKING BRAKE / BRAKE FLUID LEVEL WARNING LIGHT SYSTEM [BR/W-01]
REF. TO BACK-UP LIGHT SYSTEM [BACK/L-01]
R167
i102
C: i192 D: AD13
AUDIO

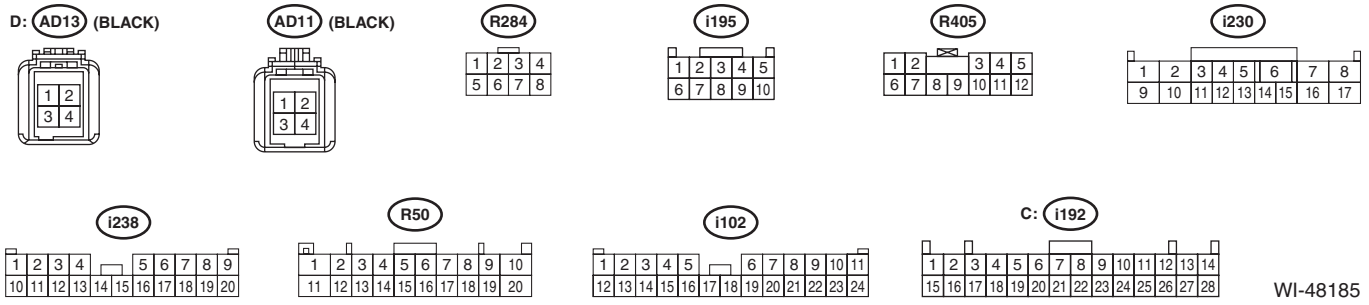
D: AD13 (BLACK)
AD11 (BLACK)
R284
i195
R405
i230
i238
R50
i102
C: i192

WI-48185

3. 7 INCH DISPLAY (WITHOUT EyeSight)

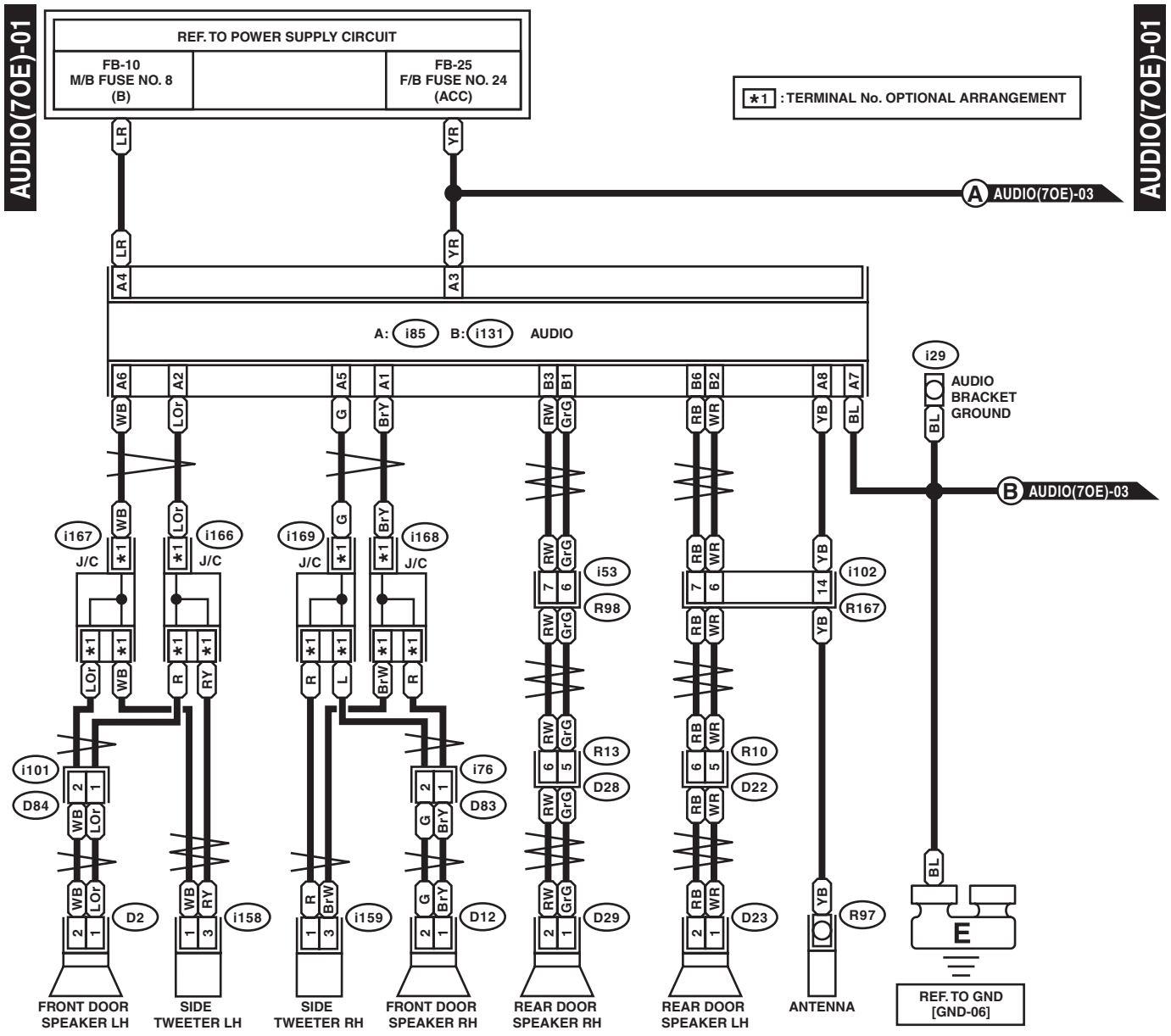

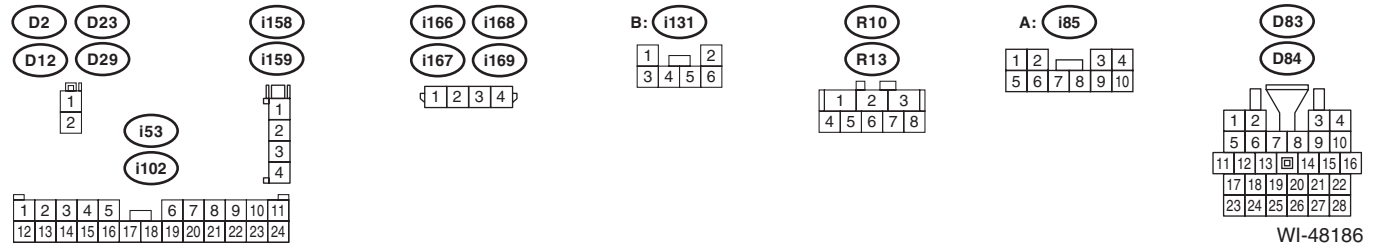

WI-48186

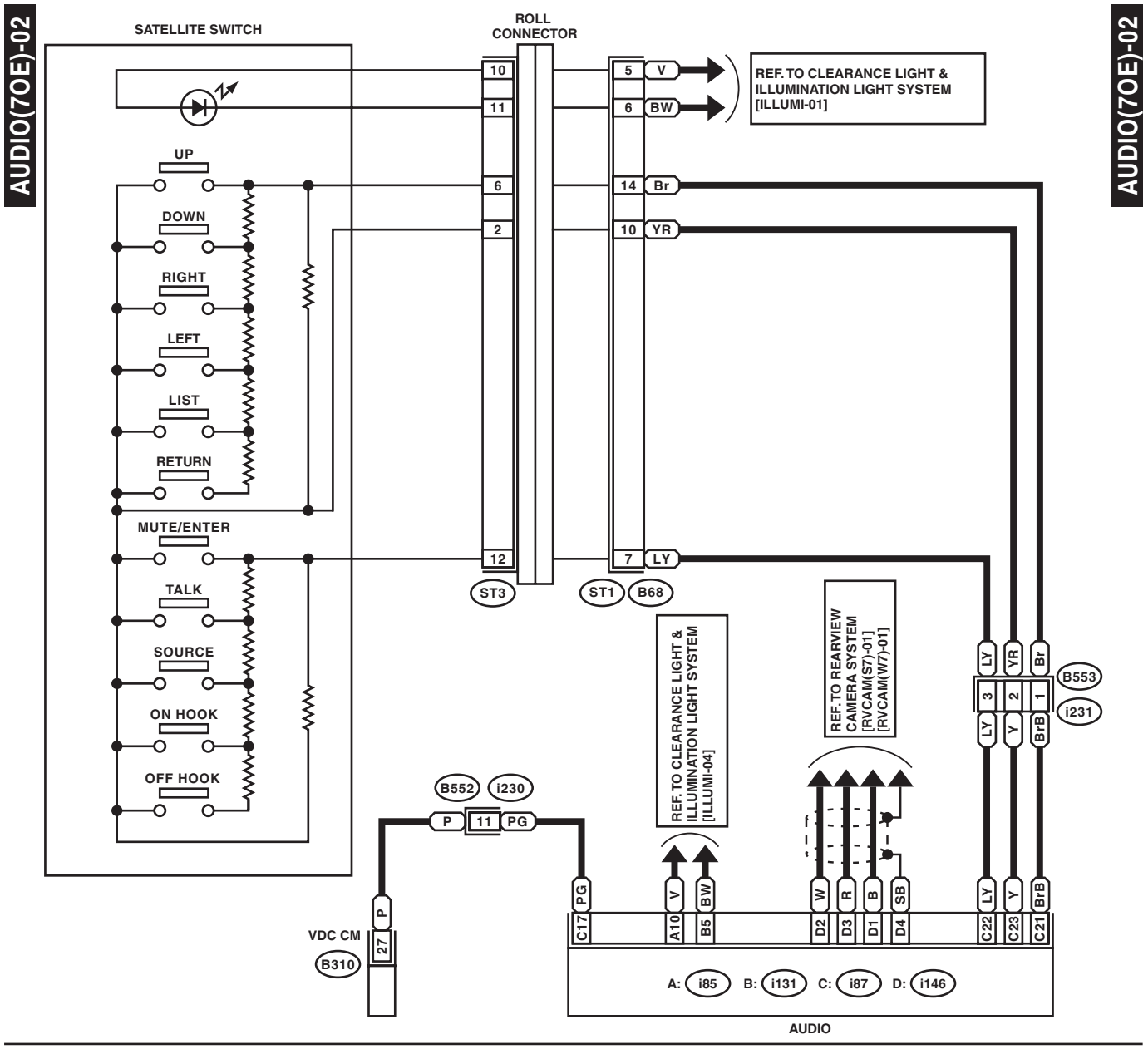
AUDIO(7OE)-02
AUDIO(7OE)-02
SATELLITE SWITCH
ROLL CONNECTOR
UP
DOWN
RIGHT
LEFT
LIST
RETURN
MUTE/ENTER
TALK
SOURCE
ON HOOK
OFF HOOK
10
11
6
2
12
5 V
6 BW
14 Br
10 YR
7 LY
REF. TO CLEARANCE LIGHT & ILLUMINATION LIGHT SYSTEM [ILLUMI-01]
ST3
ST1 B68
REF. TO CLEARANCE LIGHT & ILLUMINATION LIGHT SYSTEM [ILLUMI-04]
REF. TO REARVIEW CAMERA SYSTEM [RVCAM(S7)-01] [RVCAM(W7)-01]
B553
i231
LY YR Br
3 2 1
LY Y BrB
B552 i230
P 11 PG
VDC CM
B310
P 27
PG V BW W R B SB LY Y BrB
C17 A10 B5 D2 D3 D1 D4 C22 C23 C21
A: i85 B: i131 C: i87 D: i146
AUDIO

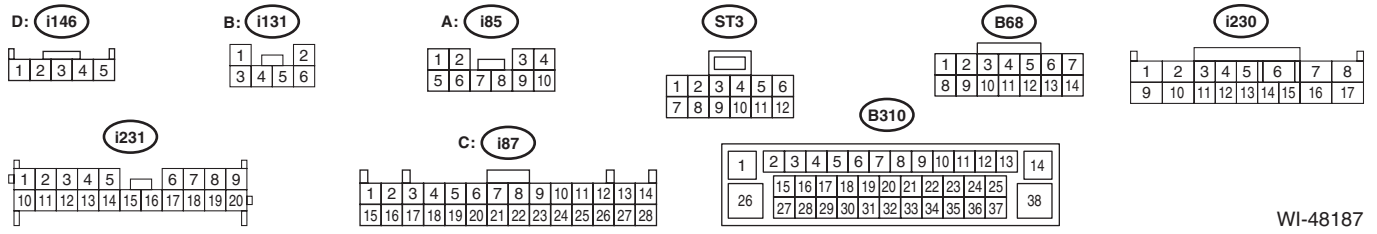
D: i146
B: i131
A: i85
ST3
B68
i230
i231
C: i87
B310

WI-48187

WIRING SYSTEM

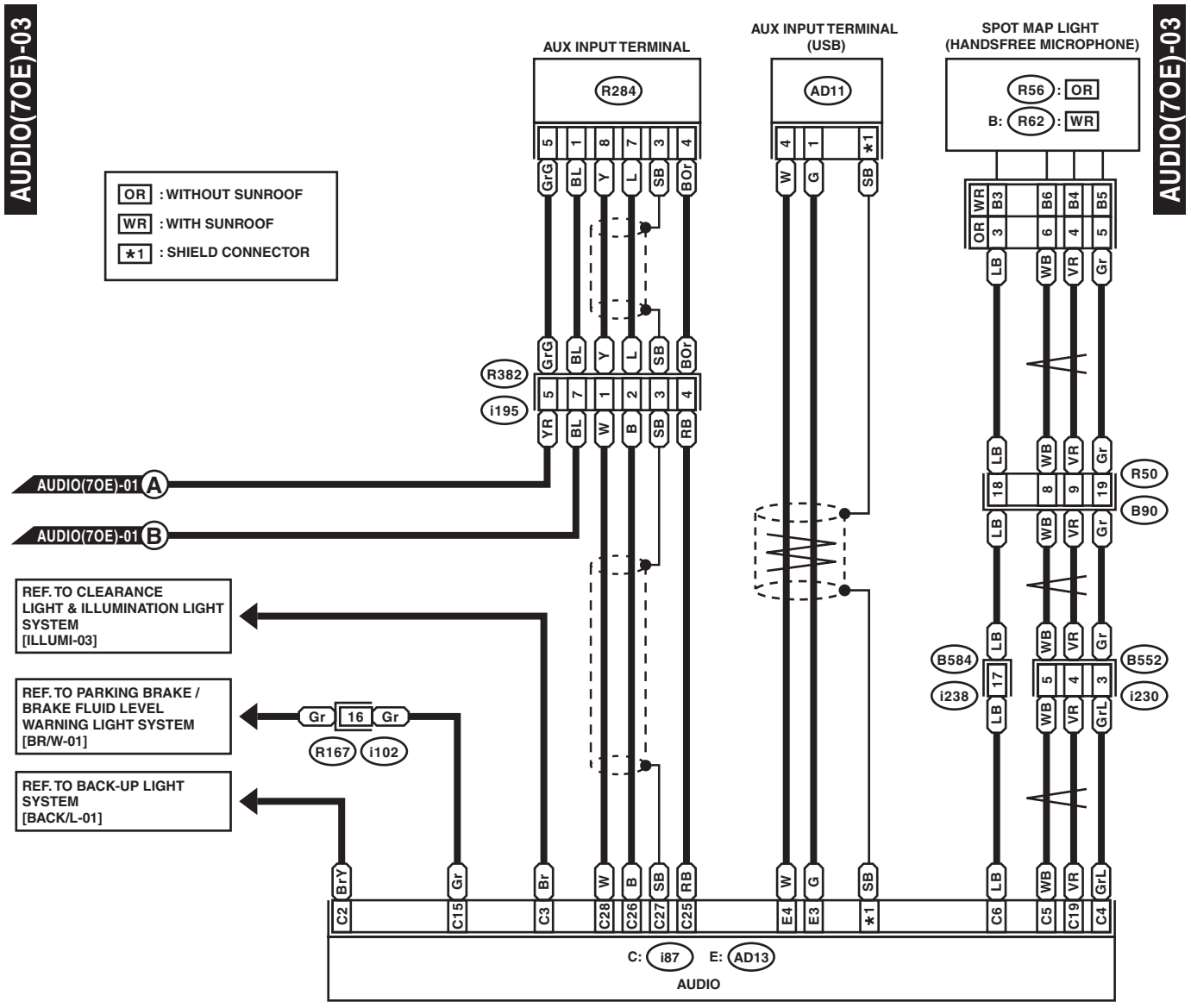

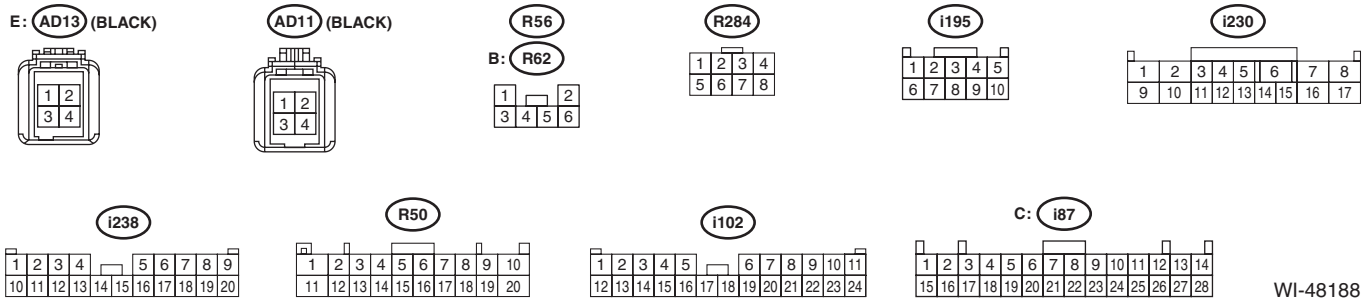

WI-48188

4. 7 INCH DISPLAY (WITH EyeSight)

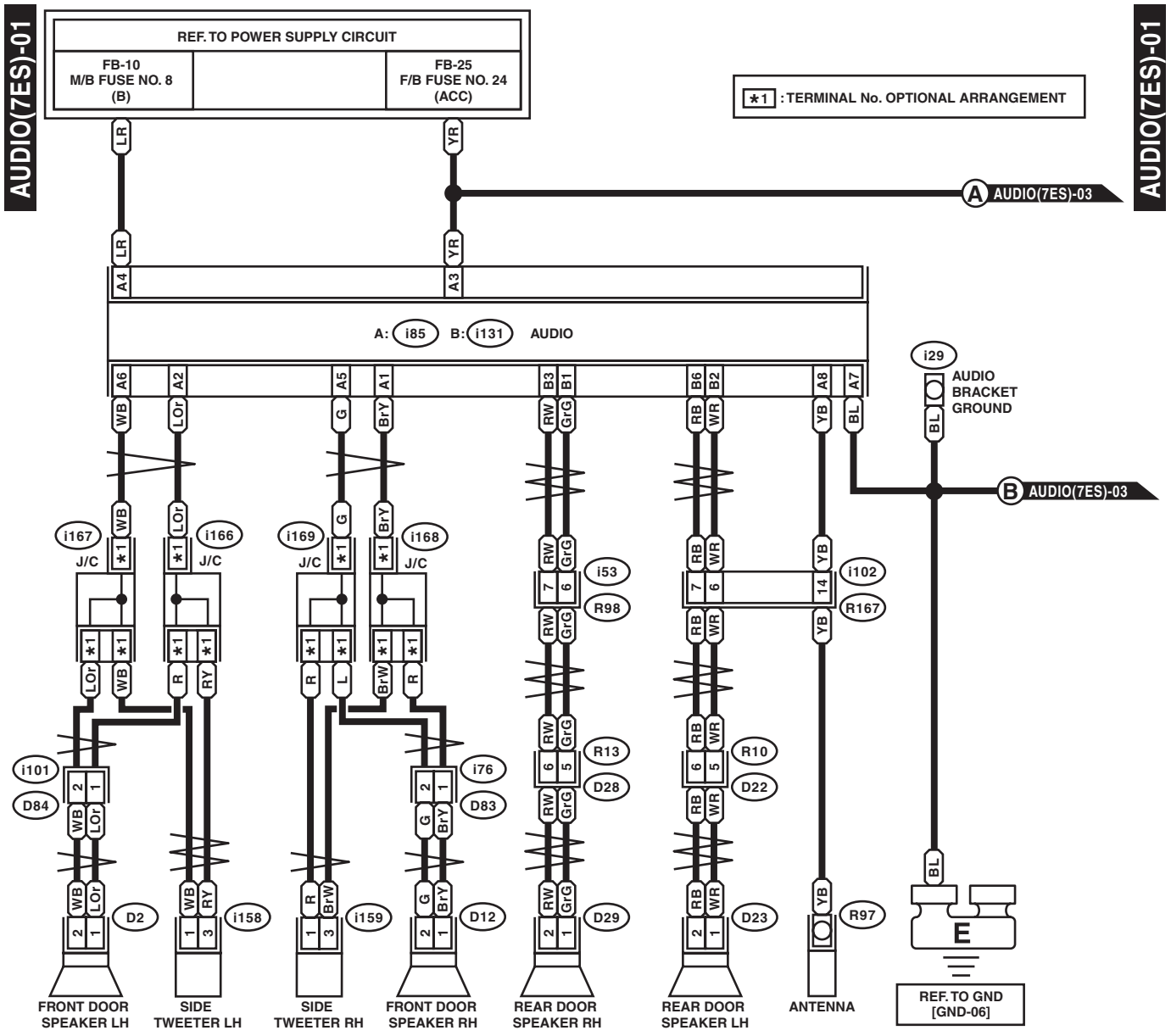

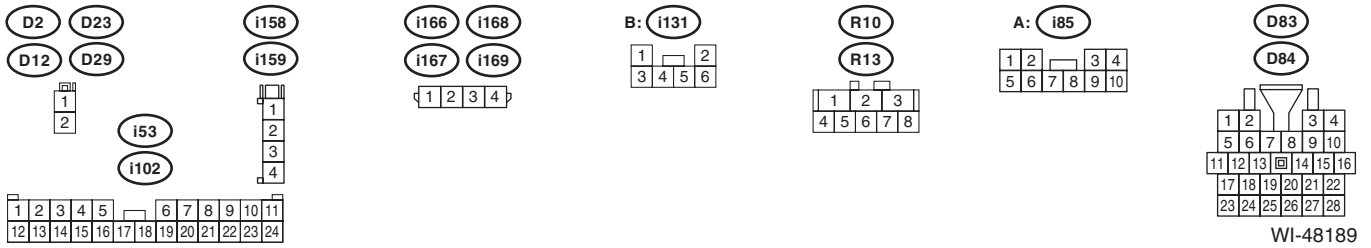

WIRING SYSTEM

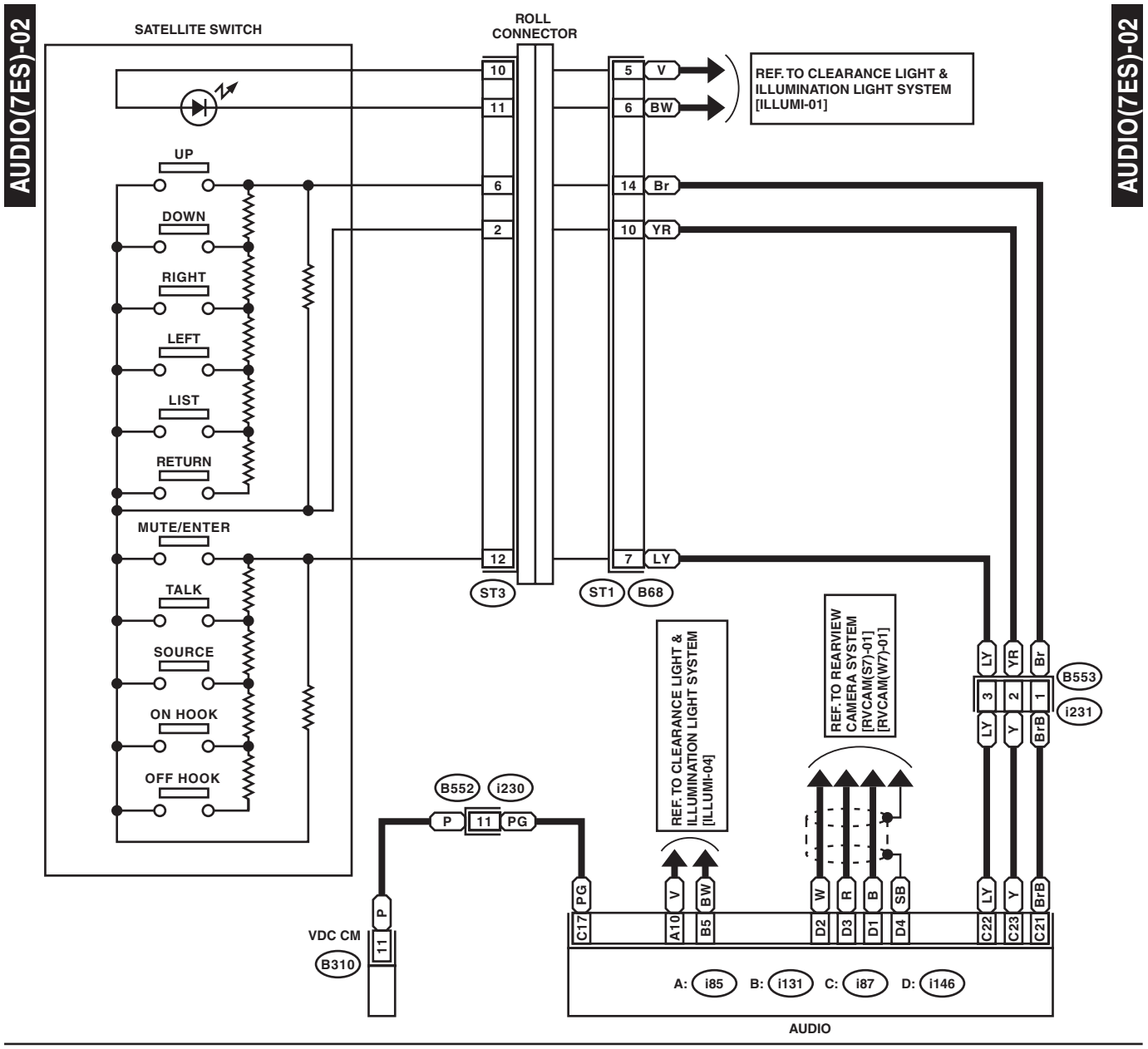

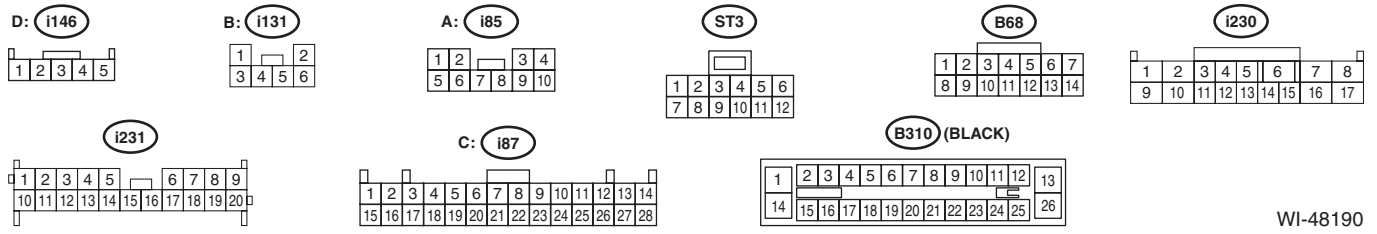

WI-48190

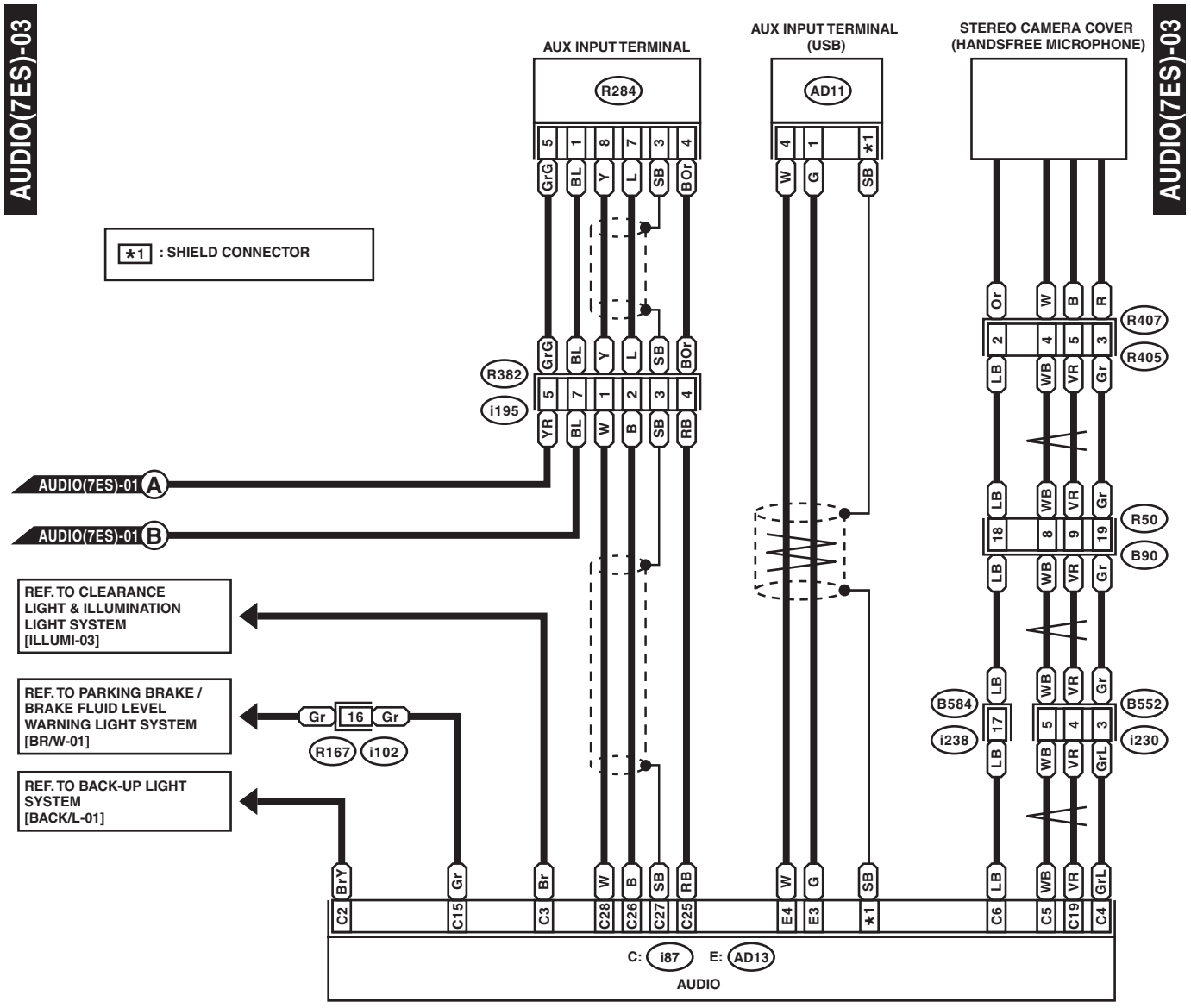
AUDIO(7ES)-03
AUDIO(7ES)-03
AUX INPUT TERMINAL
AUX INPUT TERMINAL (USB)
STEREO CAMERA COVER (HANDSFREE MICROPHONE)
R284
AD11
*1 : SHIELD CONNECTOR
R382
i195
R407
R405
R50
B90
B584
B552
i238
i230
AUDIO(7ES)-01 A
AUDIO(7ES)-01 B
REF. TO CLEARANCE LIGHT & ILLUMINATION LIGHT SYSTEM [ILLUMI-03]
REF. TO PARKING BRAKE / BRAKE FLUID LEVEL WARNING LIGHT SYSTEM [BR/W-01]
REF. TO BACK-UP LIGHT SYSTEM [BACK/L-01]
R167
i102
C: i87 E: AD13
AUDIO

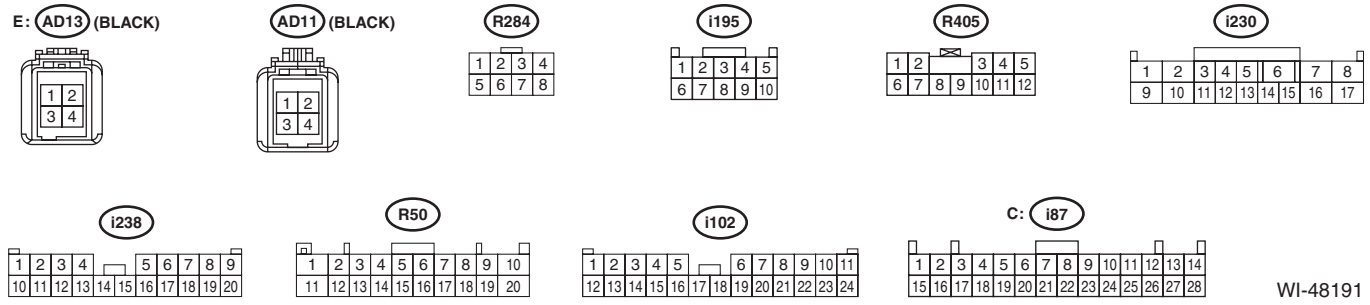
E: AD13 (BLACK)
AD11 (BLACK)
R284
i195
R405
i230
i238
R50
i102
C: i87

WI-48191

8. Back-up Light System

A: WIRING DIAGRAM

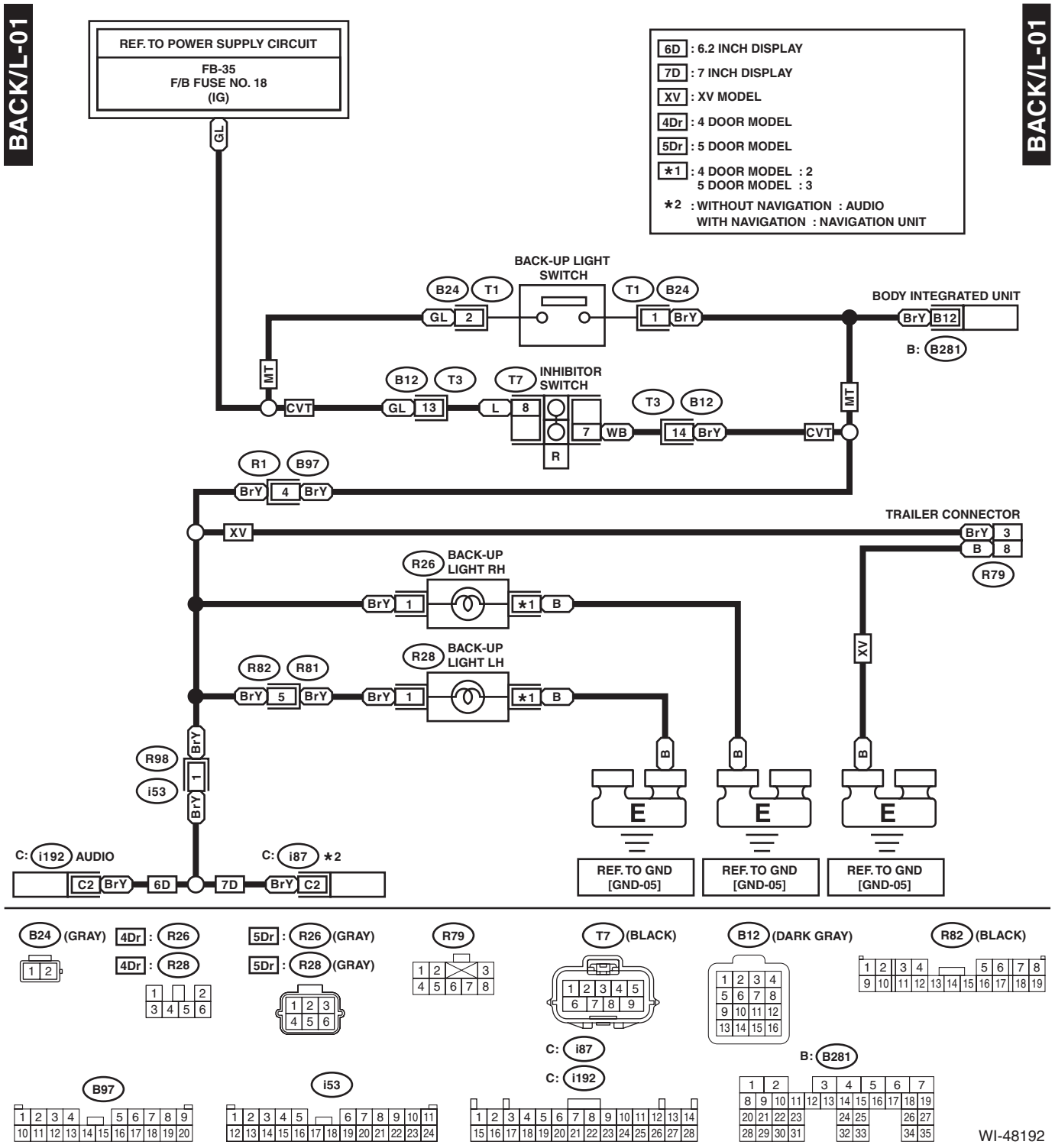

9. CAN Communication System

A: WIRING DIAGRAM

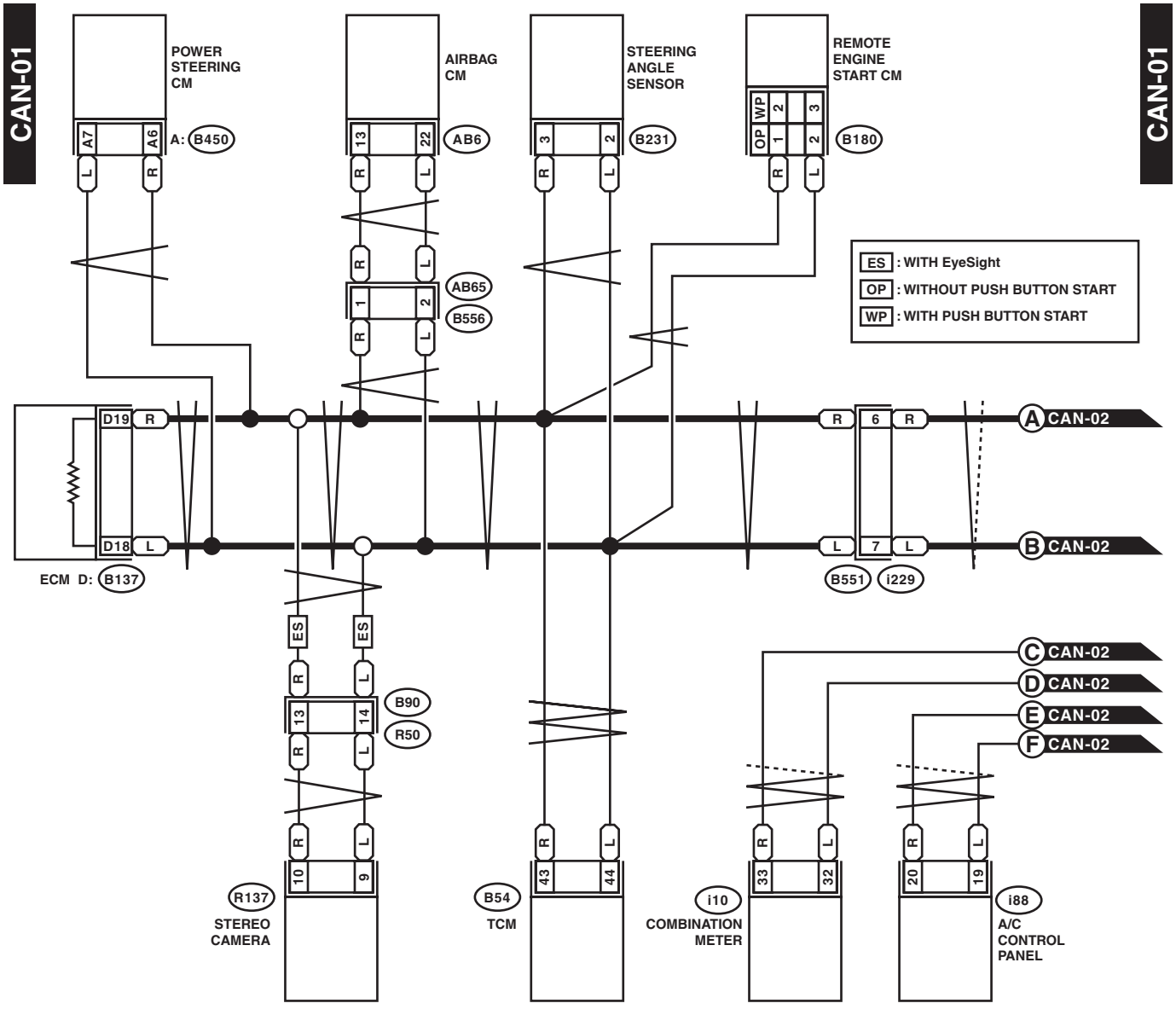

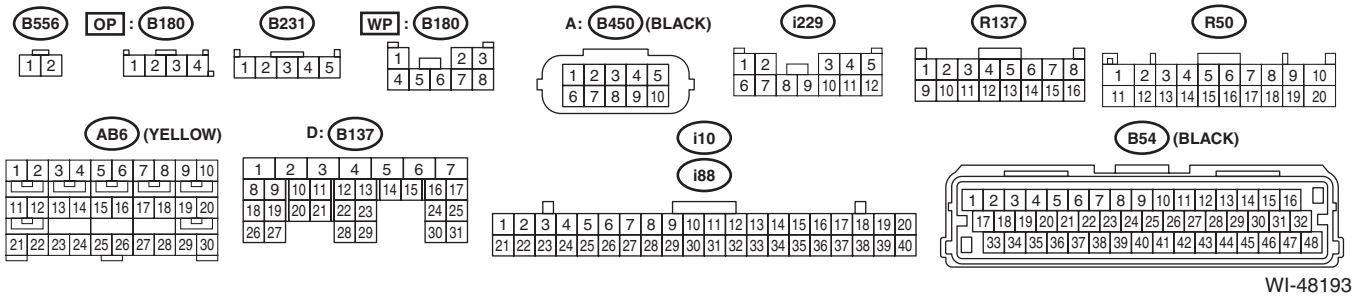

WI-48193

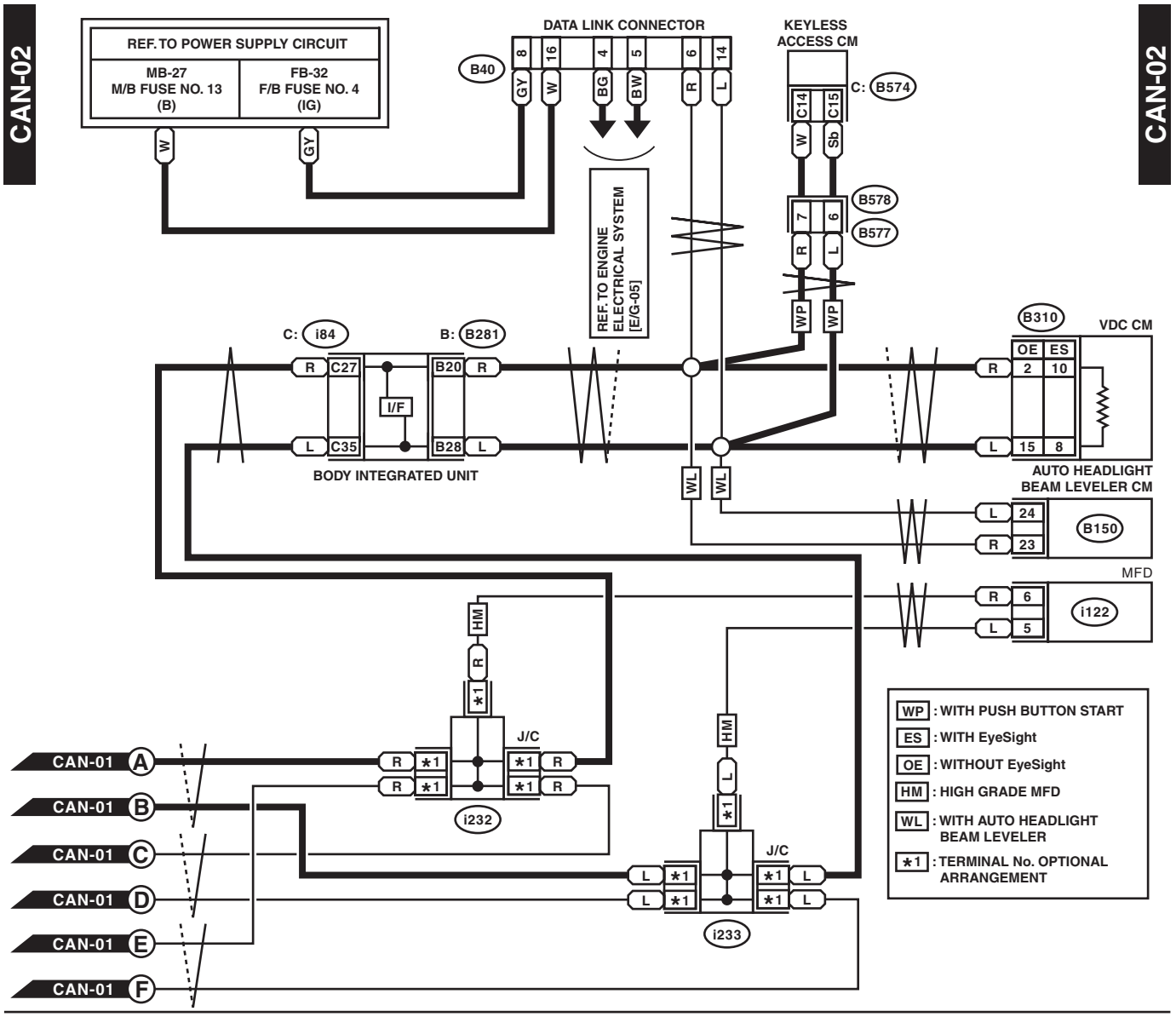
CAN-02
CAN-02
REF. TO POWER SUPPLY CIRCUIT
MB-27
M/B FUSE NO. 13
(B)
FB-32
F/B FUSE NO. 4
(IG)
DATA LINK CONNECTOR
B40
KEYLESS ACCESS CM
C: B574
REF. TO ENGINE ELECTRICAL SYSTEM [E/G-05]
B578
B577
C: i84
B: B281
I/F
BODY INTEGRATED UNIT
B310
VDC CM
AUTO HEADLIGHT BEAM LEVELER CM
B150
MFD
i122
J/C
i232
i233
CAN-01 A
CAN-01 B
CAN-01 C
CAN-01 D
CAN-01 E
CAN-01 F
WP : WITH PUSH BUTTON START
ES : WITH EyeSight
OE : WITHOUT EyeSight
HM : HIGH GRADE MFD
WL : WITH AUTO HEADLIGHT BEAM LEVELER
*1 : TERMINAL No. OPTIONAL ARRANGEMENT

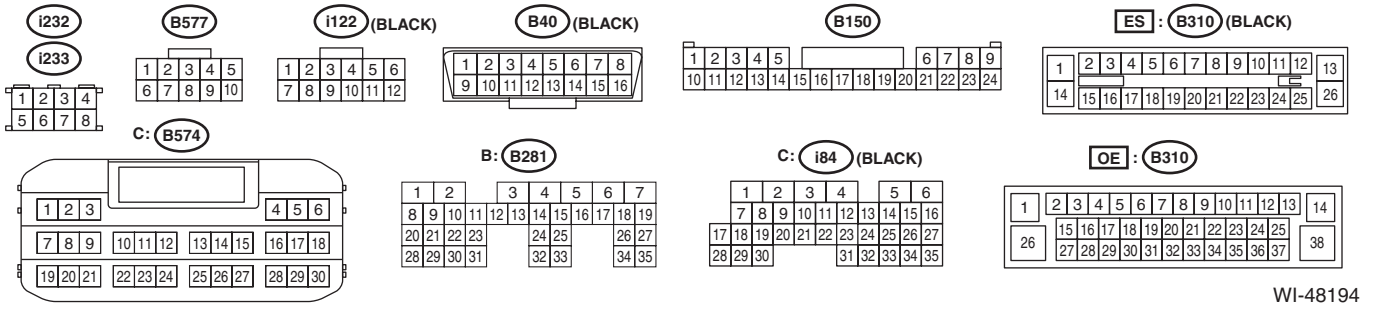
i232
i233
B577
i122 (BLACK)
B40 (BLACK)
B150
ES : B310 (BLACK)
C: B574
B: B281
C: i84 (BLACK)
OE : B310

WI-48194

10.Charging System

A: WIRING DIAGRAM

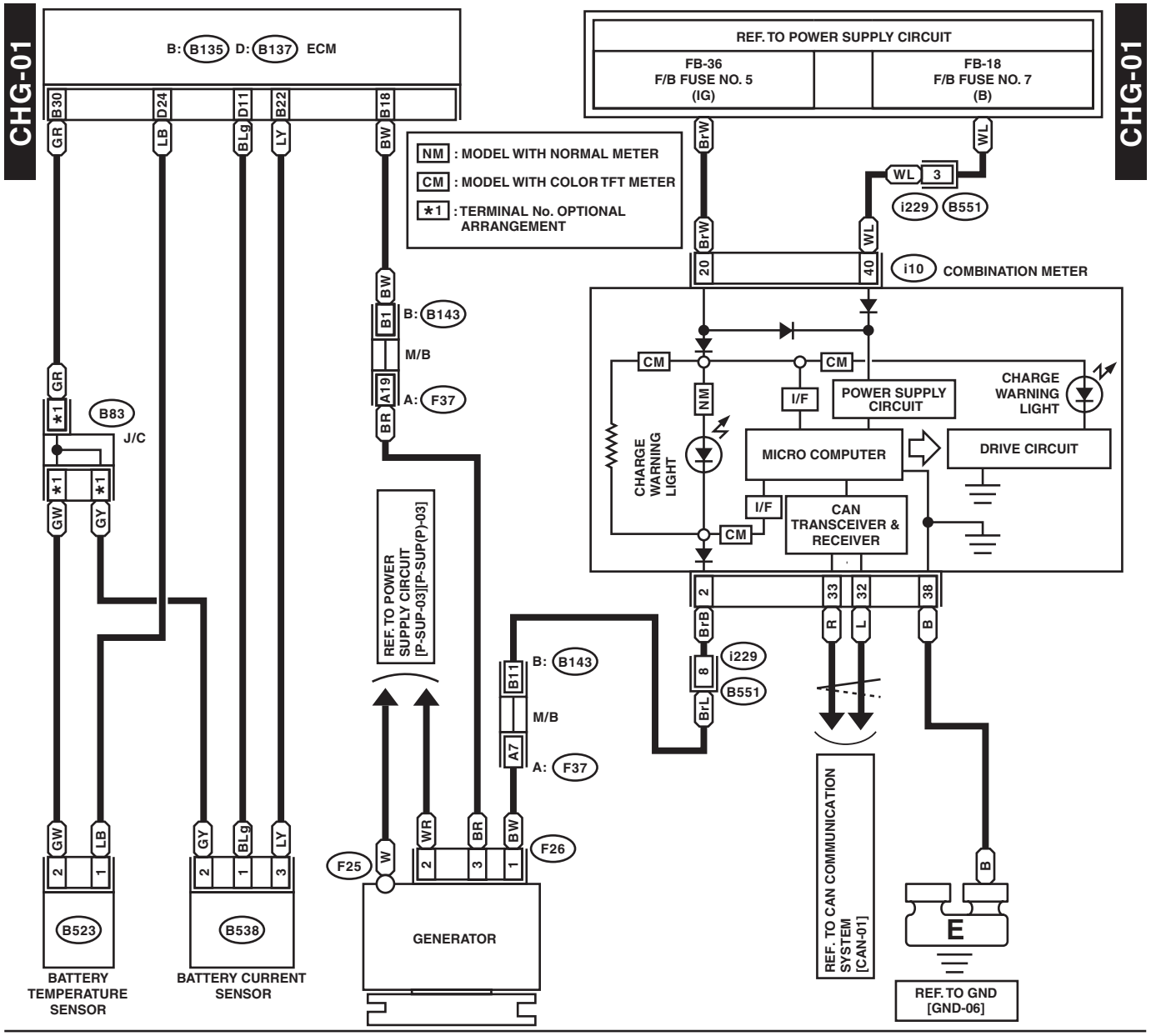

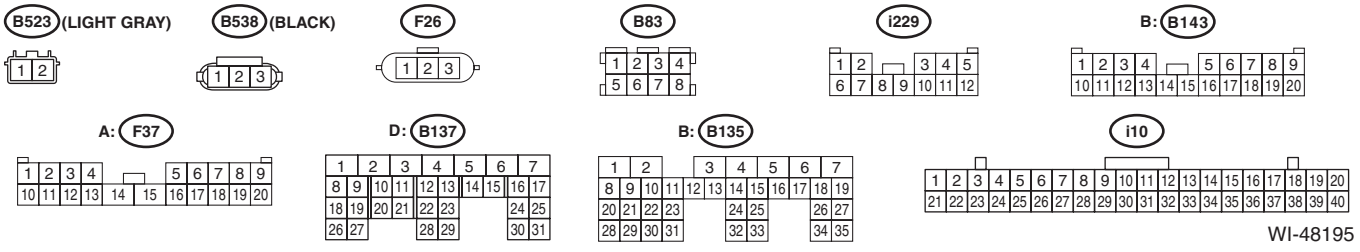

WI-48195

11.Clearance Light and Illumination Light System

A: WIRING DIAGRAM

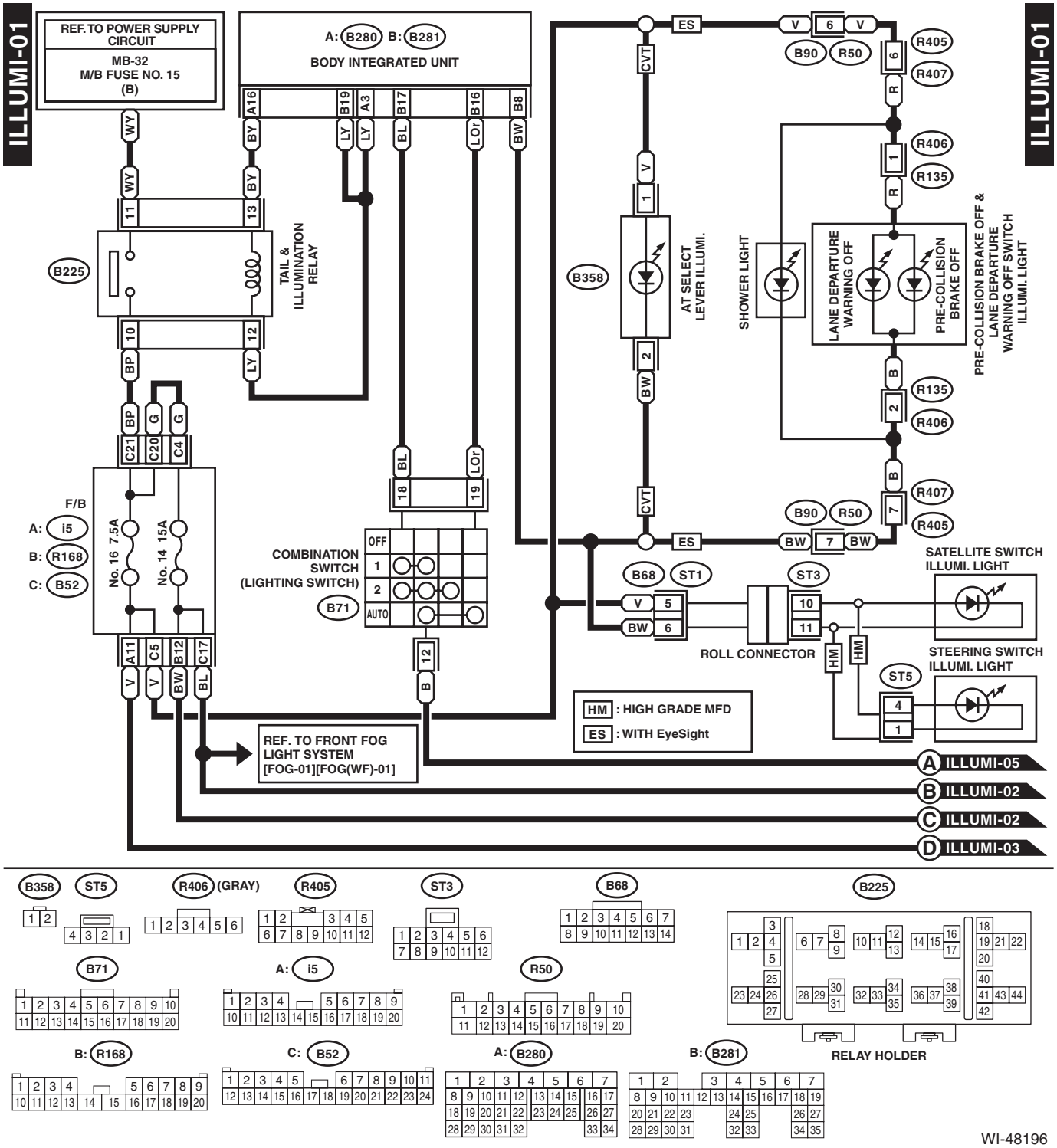

Clearance Light and Illumination Light System

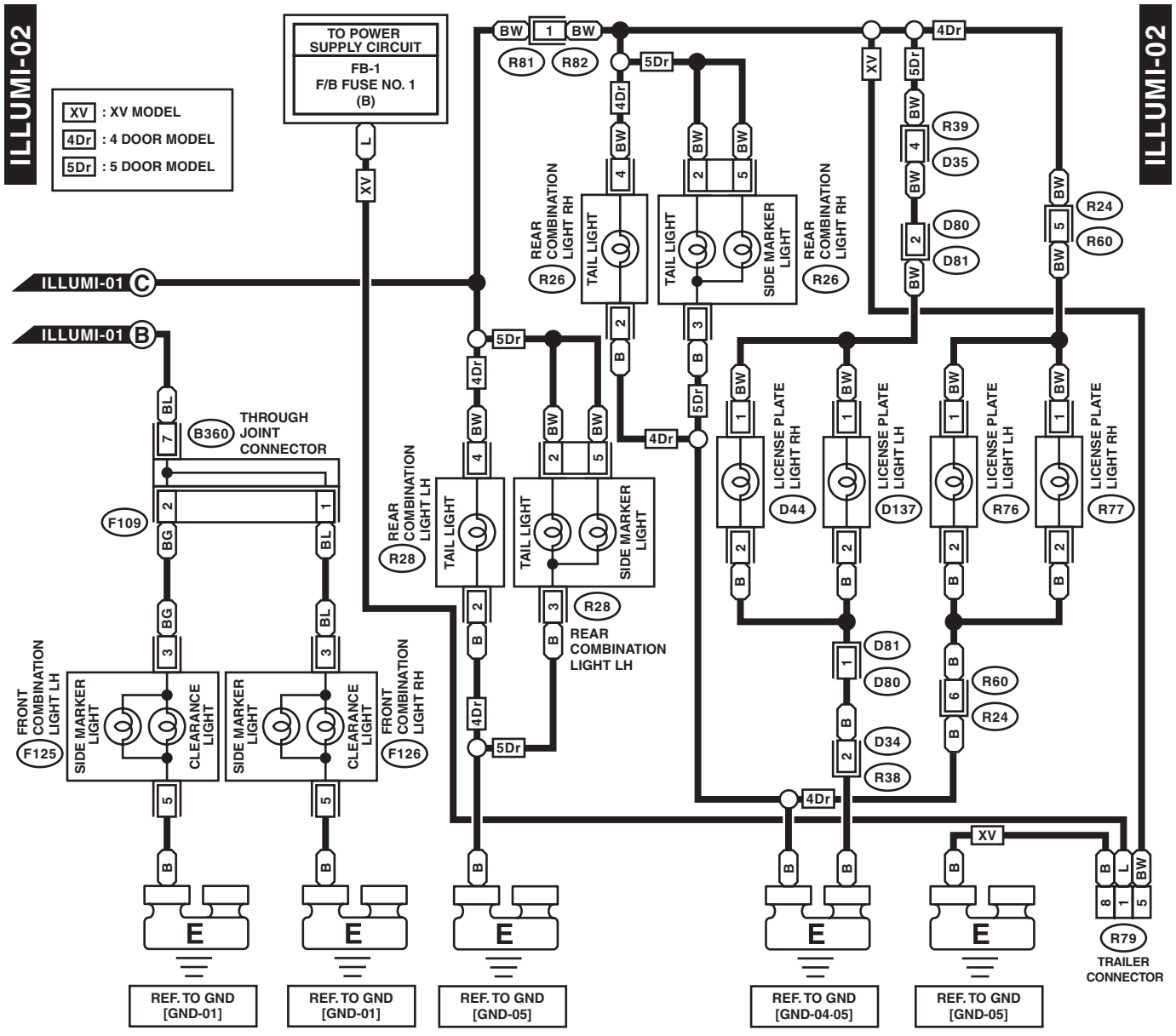

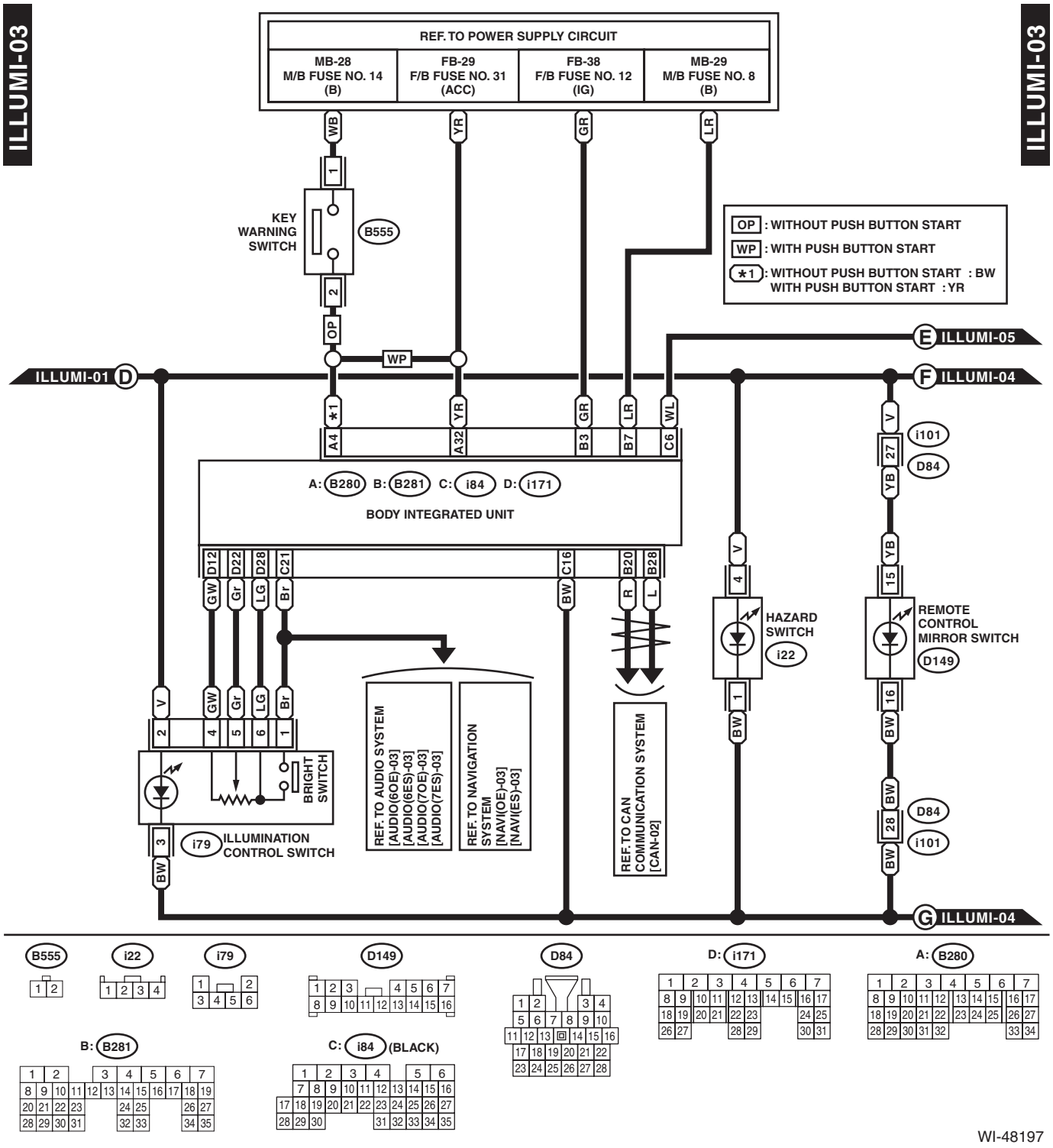
ILLUMI-03
ILLUMI-03
REF. TO POWER SUPPLY CIRCUIT
MB-28 M/B FUSE NO. 14 (B)
FB-29 F/B FUSE NO. 31 (ACC)
FB-38 F/B FUSE NO. 12 (IG)
MB-29 M/B FUSE NO. 8 (B)
KEY WARNING SWITCH
B555
OP : WITHOUT PUSH BUTTON START
WP : WITH PUSH BUTTON START
*1 : WITHOUT PUSH BUTTON START : BW
WITH PUSH BUTTON START : YR
ILLUMI-05
ILLUMI-01
ILLUMI-04
A: B280 B: B281 C: i84 D: i171
BODY INTEGRATED UNIT
HAZARD SWITCH
i22
REMOTE CONTROL MIRROR SWITCH
D149
i101
D84
BRIGHT SWITCH
i79 ILLUMINATION CONTROL SWITCH
REF. TO AUDIO SYSTEM [AUDIO(6OE)-03] [AUDIO(6ES)-03] [AUDIO(7OE)-03] [AUDIO(7ES)-03]
REF. TO NAVIGATION SYSTEM [NAVI(OE)-03] [NAVI(ES)-03]
REF. TO CAN COMMUNICATION SYSTEM [CAN-02]
ILLUMI-04
B555
i22
i79
D149
D84
D: i171
A: B280
B: B281
C: i84 (BLACK)

WI-48197

ILLUMI-04

MA : MANUAL A/C
AA : AUTO A/C
HM : HIGH GRADE MFD

*1 : WITHOUT SRF : OP CONNECTOR (FOG LIGHT SWITCH)
WITH SRF : SRF OFF SWITCH
*2 : WITHOUT SRF : i28
WITH SRF : i92
*3 : WITHOUT NAVIGATION : AUDIO
WITH NAVIGATION : NAVIGATION UNIT

ILLUMI-04

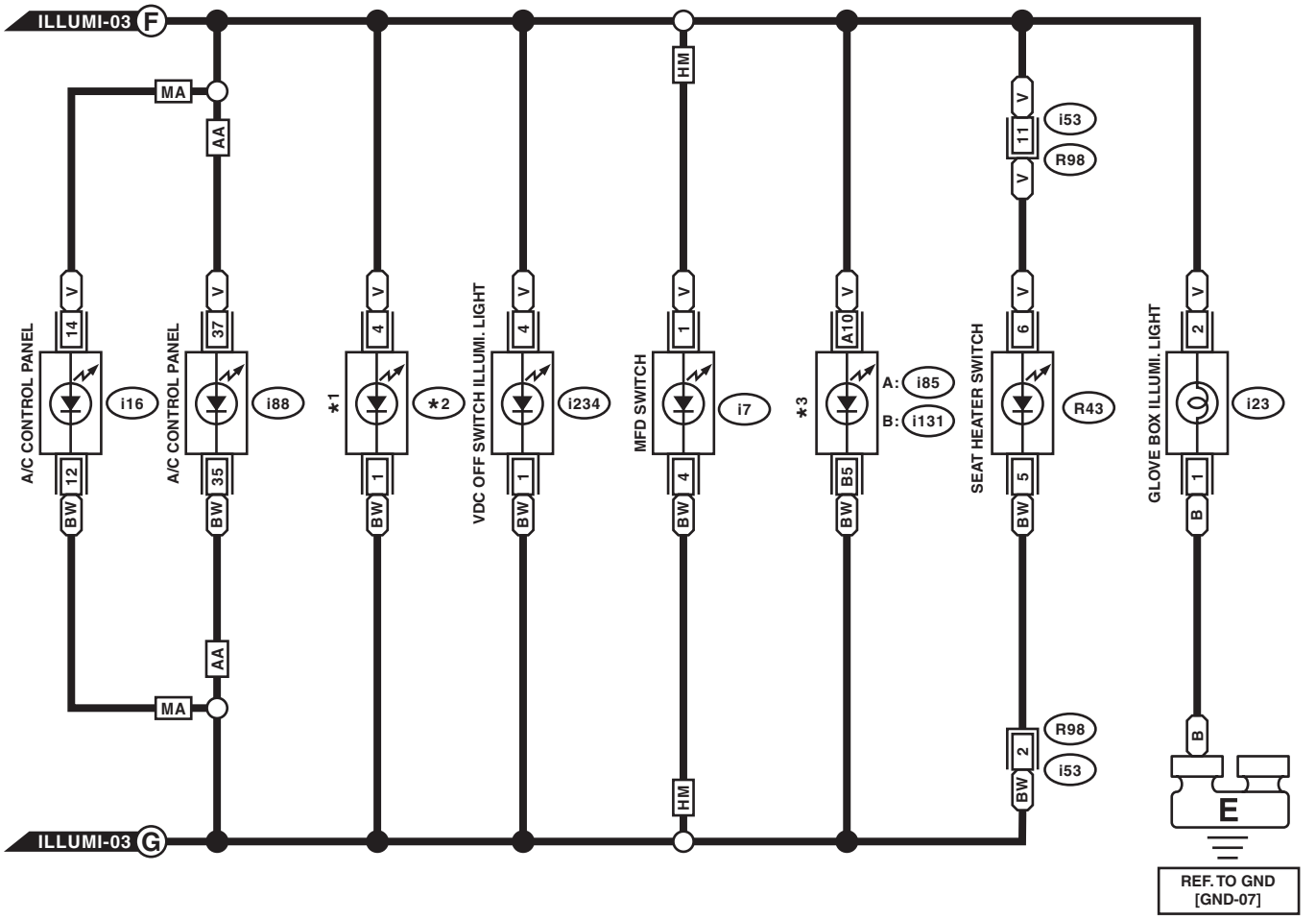

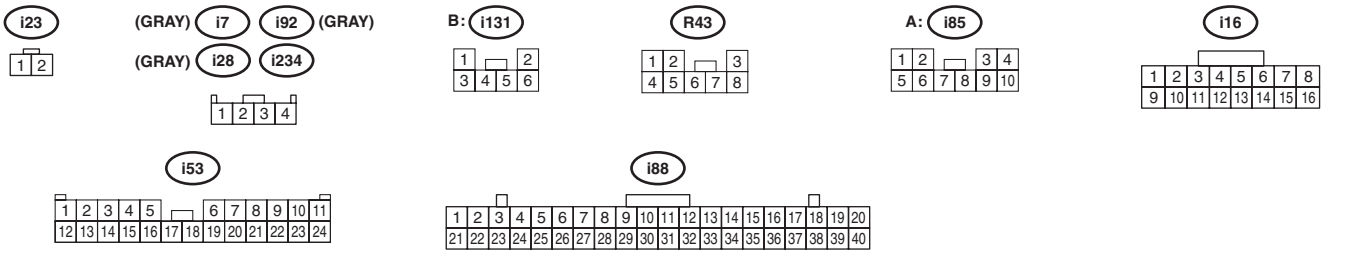

WI-48198

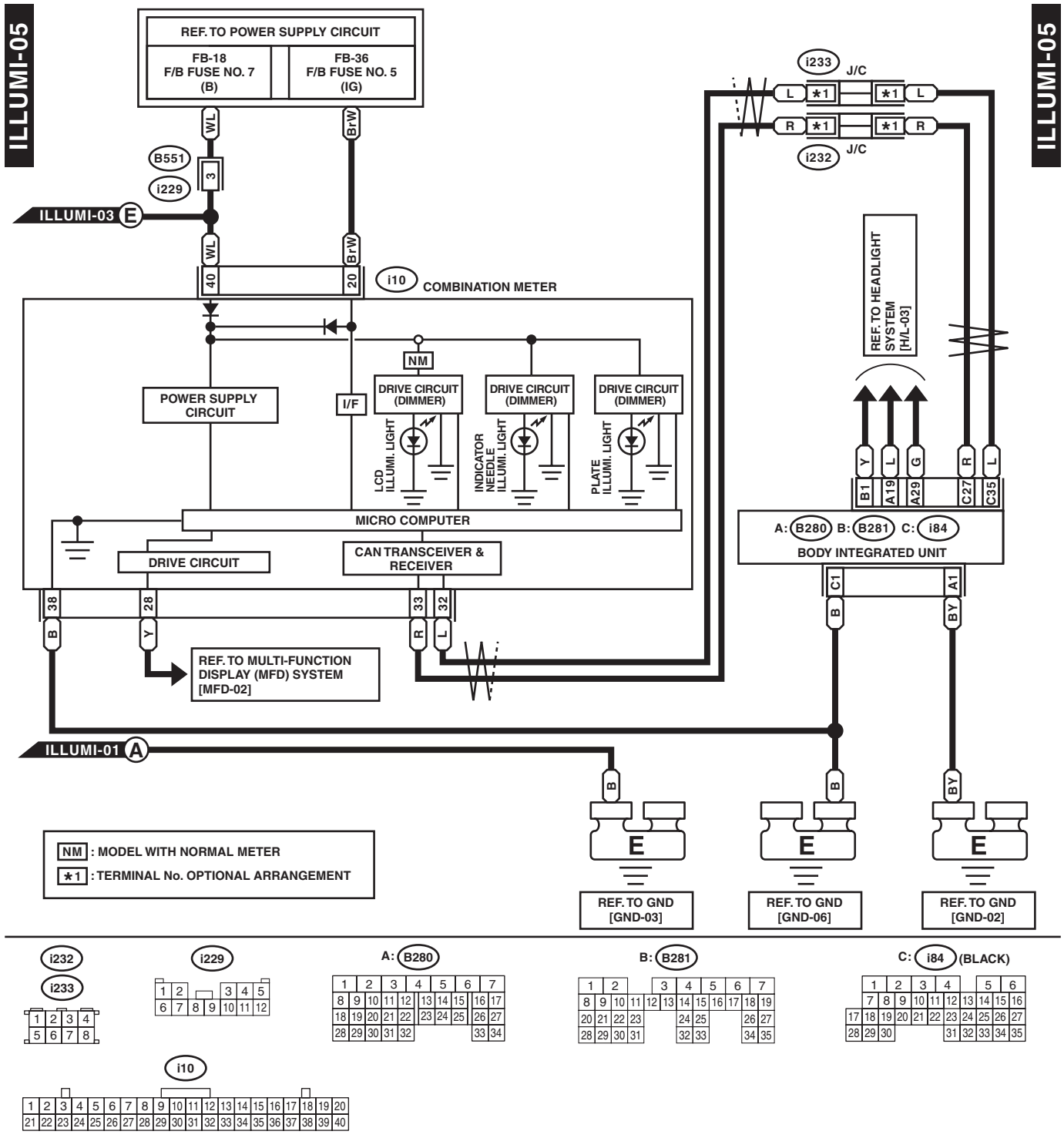
ILLUMI-05
ILLUMI-05
REF. TO POWER SUPPLY CIRCUIT
FB-18
F/B FUSE NO. 7
(B)
FB-36
F/B FUSE NO. 5
(IG)
WL
BrW
B551
3
i229
ILLUMI-03 E
WL
BrW
40
20
i10
COMBINATION METER
NM
POWER SUPPLY CIRCUIT
I/F
DRIVE CIRCUIT (DIMMER)
DRIVE CIRCUIT (DIMMER)
DRIVE CIRCUIT (DIMMER)
LCD ILLUMI. LIGHT
INDICATOR NEEDLE ILLUMI. LIGHT
PLATE ILLUMI. LIGHT
MICRO COMPUTER
DRIVE CIRCUIT
CAN TRANSCEIVER & RECEIVER
38
28
33
32
B
Y
R
L
REF. TO MULTI-FUNCTION DISPLAY (MFD) SYSTEM [MFD-02]
i233 J/C
i232 J/C
L
R
*1
REF. TO HEADLIGHT SYSTEM [H/L-03]
Y
L
G
R
L
B1
A19
A29
C27
C35
A: B280 B: B281 C: i84
BODY INTEGRATED UNIT
C1
A1
B
BY
ILLUMI-01 A
B
B
BY
E
E
E
REF. TO GND [GND-03]
REF. TO GND [GND-06]
REF. TO GND [GND-02]
NM : MODEL WITH NORMAL METER
*1 : TERMINAL No. OPTIONAL ARRANGEMENT
i232
i233
i229
A: B280
B: B281
C: i84 (BLACK)
i10

WI-48199

12.Combination Meter System

A: WIRING DIAGRAM

1. MODEL WITH NORMAL METER

C/M-01

C/M-01

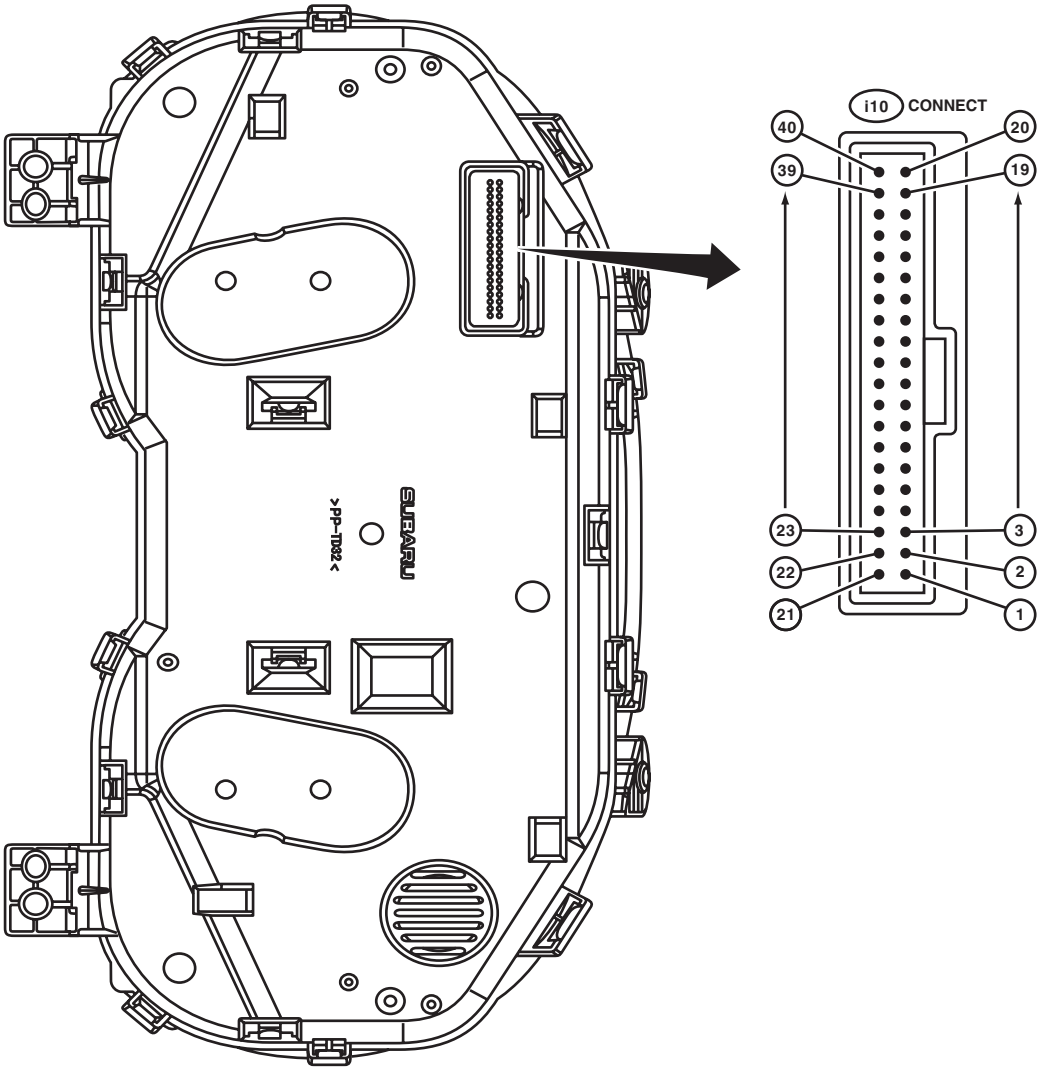

WI-34175

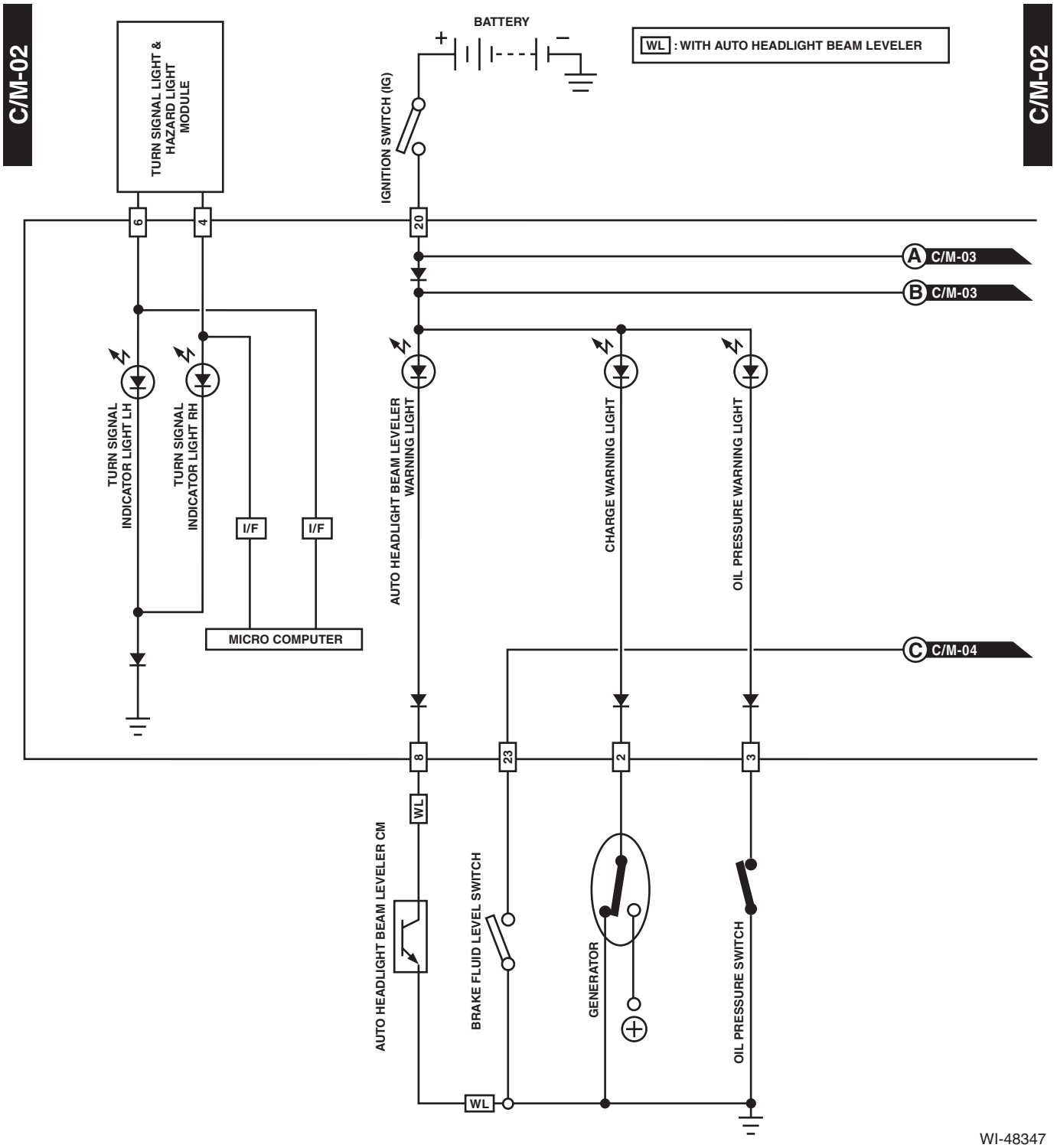
C/M-02
C/M-02
TURN SIGNAL LIGHT & HAZARD LIGHT MODULE
BATTERY
WL : WITH AUTO HEADLIGHT BEAM LEVELER
IGNITION SWITCH (IG)
6
4
20
A C/M-03
B C/M-03
TURN SIGNAL INDICATOR LIGHT LH
TURN SIGNAL INDICATOR LIGHT RH
I/F
I/F
MICRO COMPUTER
AUTO HEADLIGHT BEAM LEVELER WARNING LIGHT
CHARGE WARNING LIGHT
OIL PRESSURE WARNING LIGHT
C C/M-04
8
23
2
3
WL
AUTO HEADLIGHT BEAM LEVELER CM
BRAKE FLUID LEVEL SWITCH
GENERATOR
OIL PRESSURE SWITCH
WL

WI-48347

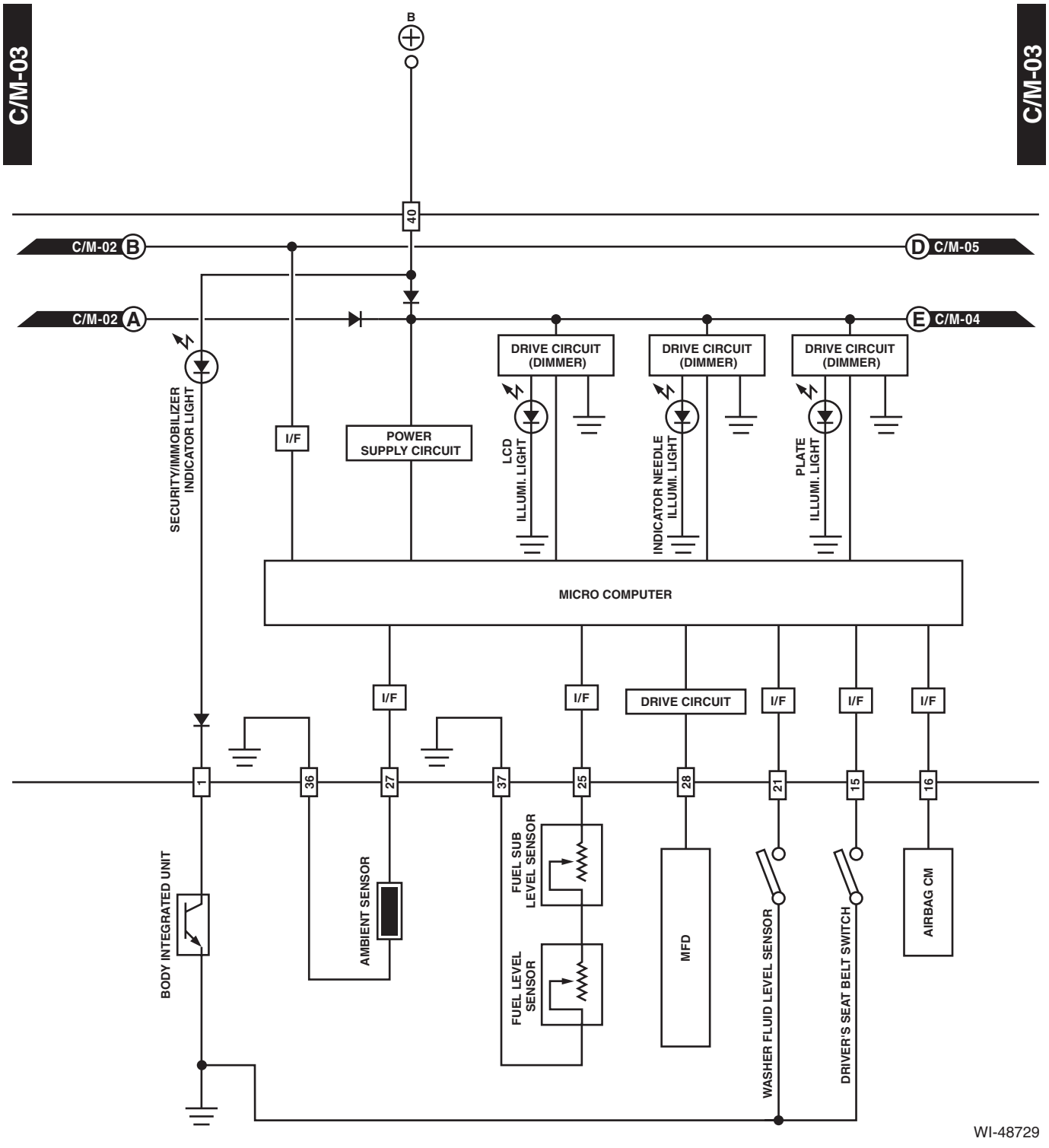
C/M-03
C/M-03
B
40
C/M-02 B
D C/M-05
C/M-02 A
E C/M-04
DRIVE CIRCUIT (DIMMER)
DRIVE CIRCUIT (DIMMER)
DRIVE CIRCUIT (DIMMER)
SECURITY/IMMOBILIZER INDICATOR LIGHT
I/F
POWER SUPPLY CIRCUIT
LCD ILLUMI. LIGHT
INDICATOR NEEDLE ILLUMI. LIGHT
PLATE ILLUMI. LIGHT
MICRO COMPUTER
I/F
I/F
DRIVE CIRCUIT
I/F
I/F
I/F
1
36
27
37
25
28
21
15
16
BODY INTEGRATED UNIT
AMBIENT SENSOR
FUEL SUB LEVEL SENSOR
FUEL LEVEL SENSOR
MFD
WASHER FLUID LEVEL SENSOR
DRIVER'S SEAT BELT SWITCH
AIRBAG CM
WI-48729

C/M-04

AA : AUTO A/C
HM : HIGH GRADE MFD
EC : WITH ECO GAUGE
WL : WITH AUTO HEADLIGHT BEAM LEVELER
★1 : SEAT BELT
KEY WARNING
HEADLIGHT ON WARNING
CUSTOMIZED
MANUAL SHIFT

C/M-04

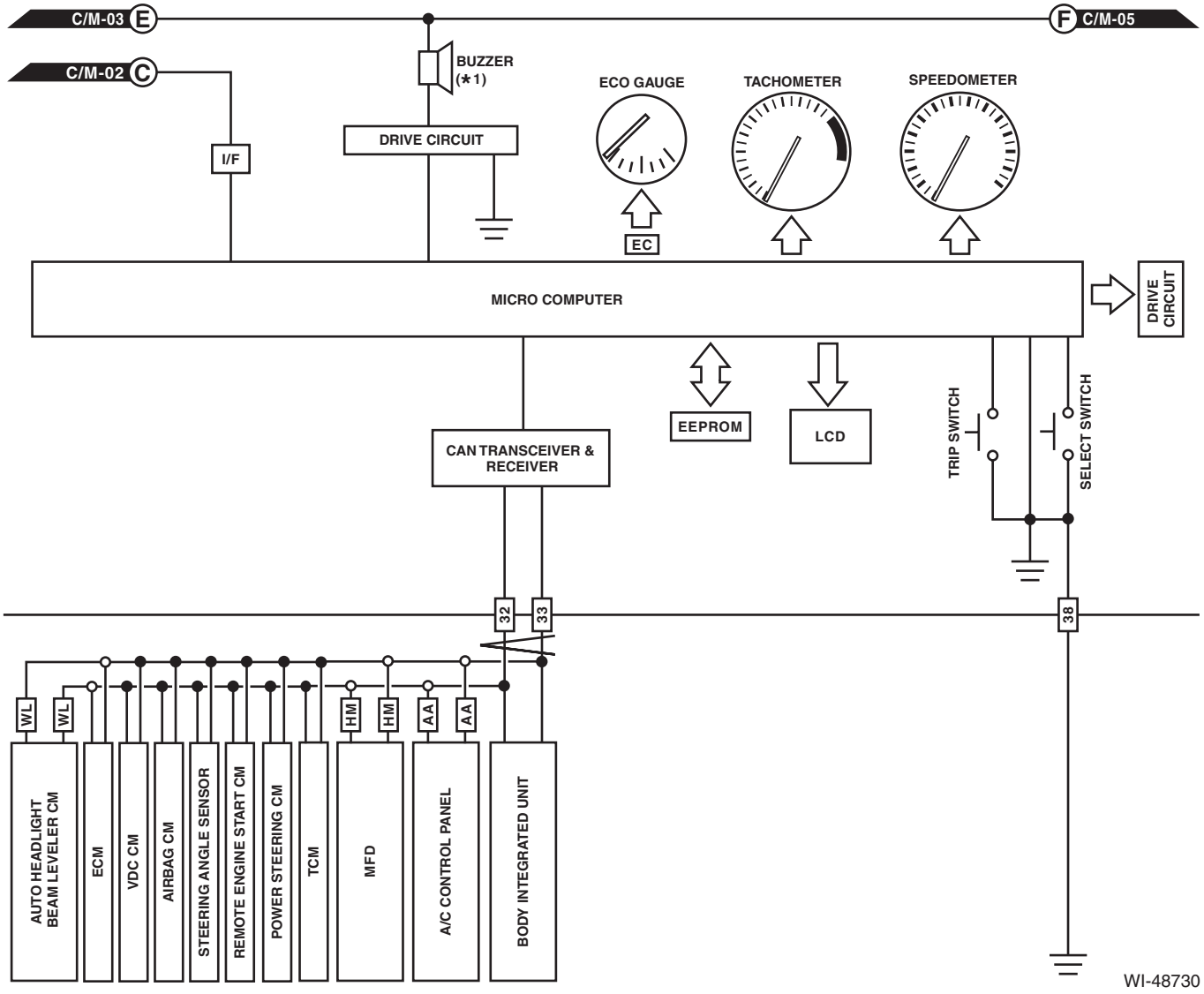

WI-48730

C/M-05

C/M-05

TP : WITH TPMS

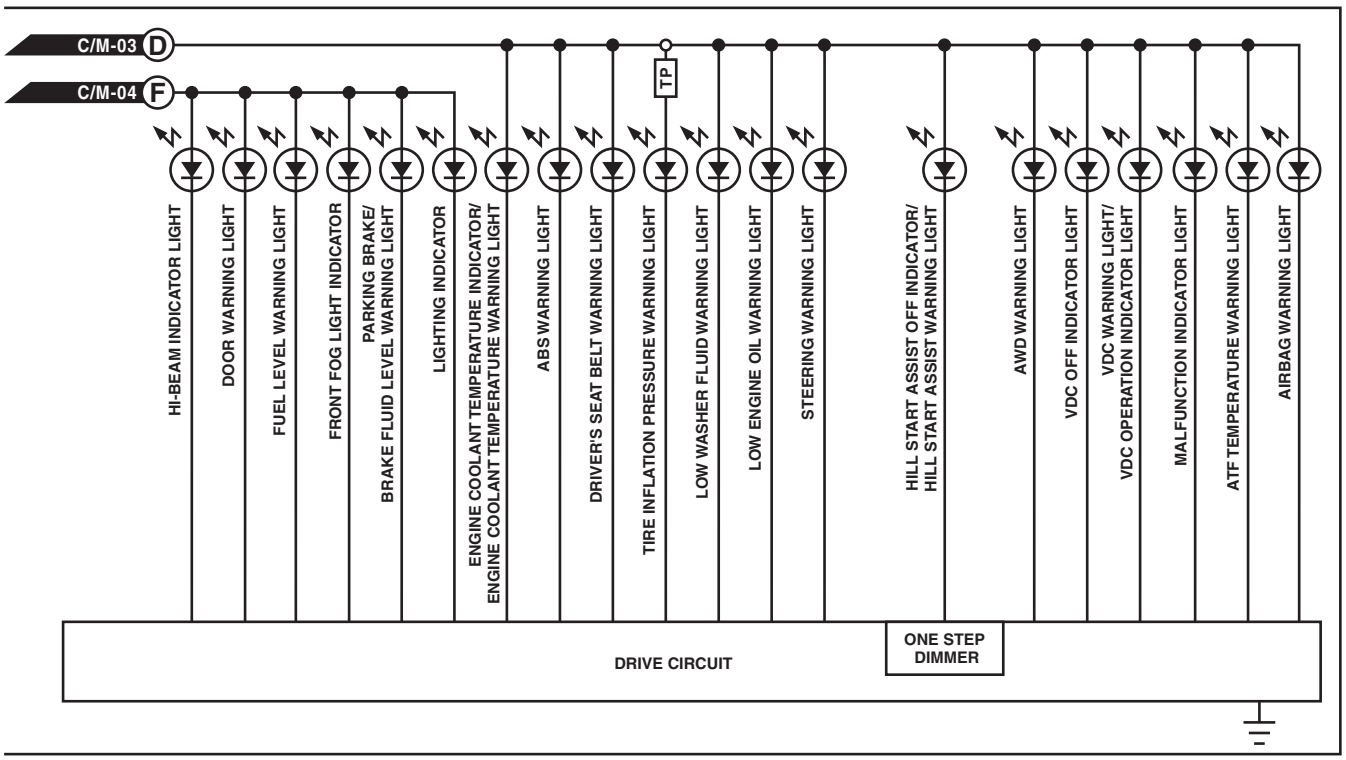

WI-48731

2. MODEL WITH COLOR TFT METER

C/M(CM)-01

C/M(CM)-01

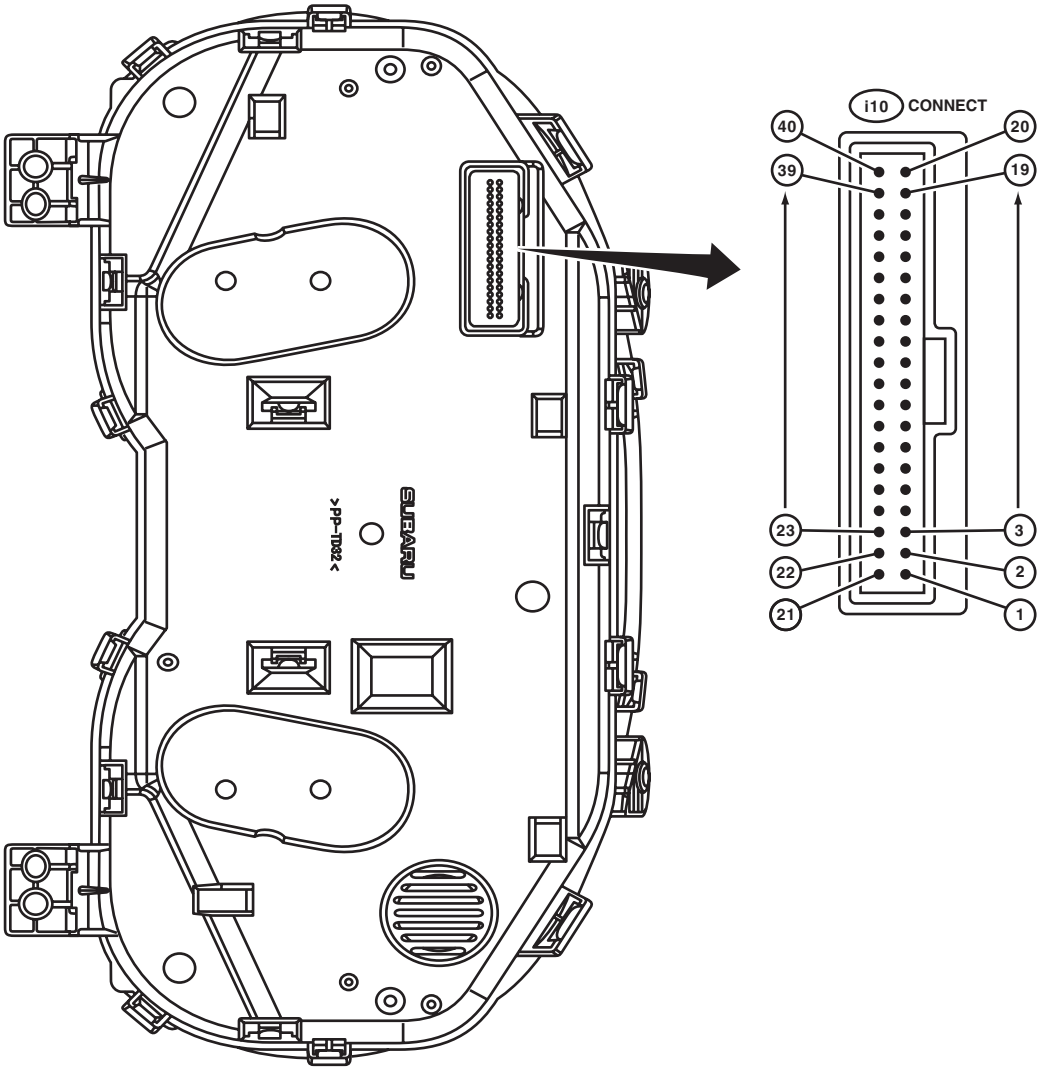

WI-48200

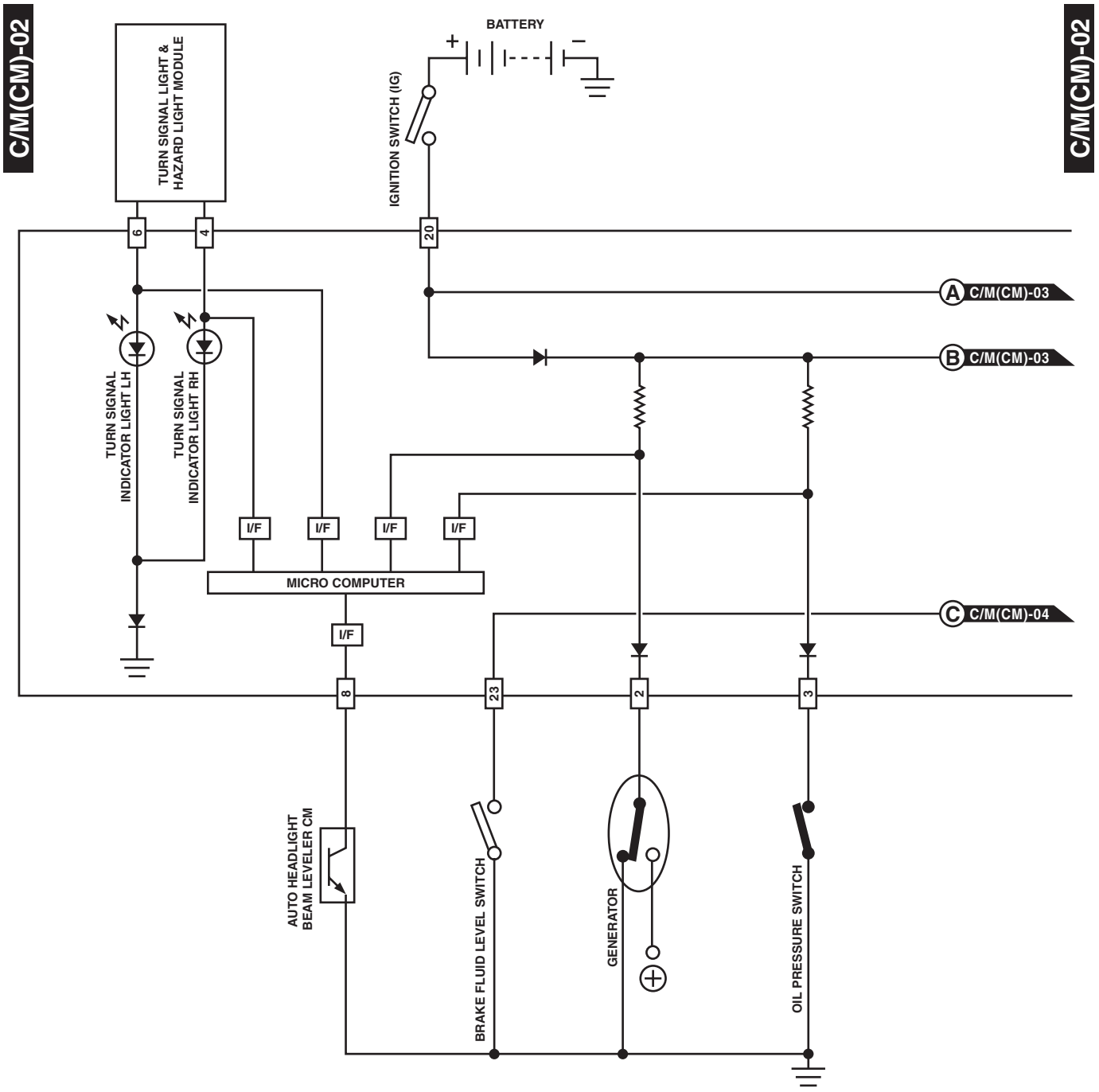
C/M(CM)-02
C/M(CM)-02
TURN SIGNAL LIGHT & HAZARD LIGHT MODULE
BATTERY
IGNITION SWITCH (IG)
6
4
20
A C/M(CM)-03
B C/M(CM)-03
TURN SIGNAL INDICATOR LIGHT LH
TURN SIGNAL INDICATOR LIGHT RH
I/F
I/F
I/F
I/F
MICRO COMPUTER
I/F
C C/M(CM)-04
8
23
2
3
AUTO HEADLIGHT BEAM LEVELER CM
BRAKE FLUID LEVEL SWITCH
GENERATOR
OIL PRESSURE SWITCH

WI-48201

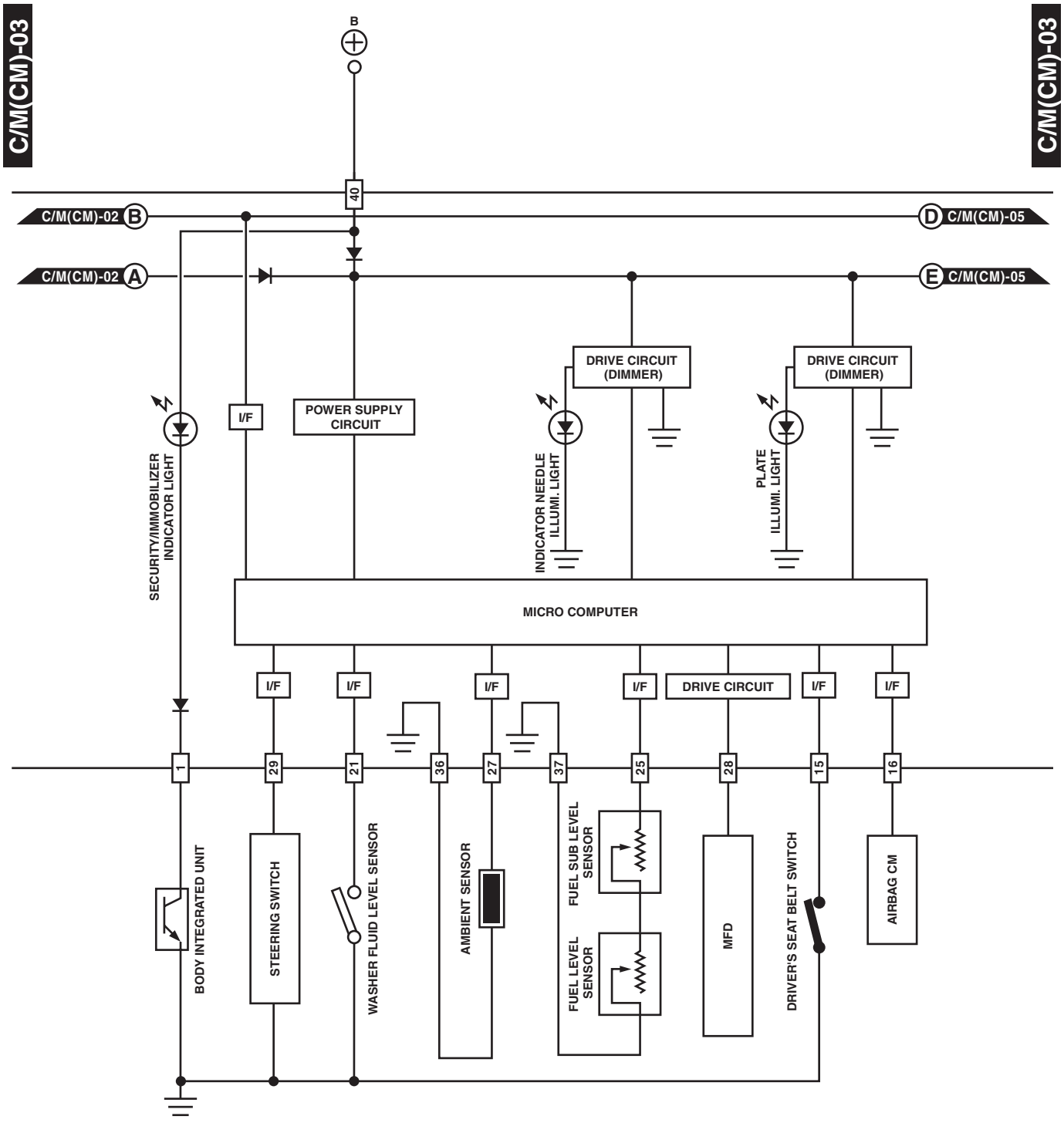
C/M(CM)-03
C/M(CM)-03
B
40
C/M(CM)-02 B
C/M(CM)-02 A
D C/M(CM)-05
E C/M(CM)-05
DRIVE CIRCUIT (DIMMER)
DRIVE CIRCUIT (DIMMER)
I/F
POWER SUPPLY CIRCUIT
SECURITY/IMMOBILIZER INDICATOR LIGHT
INDICATOR NEEDLE ILLUMI. LIGHT
PLATE ILLUMI. LIGHT
MICRO COMPUTER
I/F
I/F
I/F
I/F
DRIVE CIRCUIT
I/F
I/F
1
29
21
36
27
37
25
28
15
16
BODY INTEGRATED UNIT
STEERING SWITCH
WASHER FLUID LEVEL SENSOR
AMBIENT SENSOR
FUEL SUB LEVEL SENSOR
FUEL LEVEL SENSOR
MFD
DRIVER'S SEAT BELT SWITCH
AIRBAG CM

WI-48202

C/M(CM)-04

TR : WITH TRIP SWITCH
WP : WITH PUSH BUTTON START
WL : WITH AUTO HEADLIGHT BEAM LEVELER
ES : WITH EyeSight
*1 : SEAT BELT
KEY WARNING
HEADLIGHT ON WARNING
CUSTOMIZED
MANUAL SHIFT
KEYLESS ACCESS
EyeSight

C/M(CM)-04

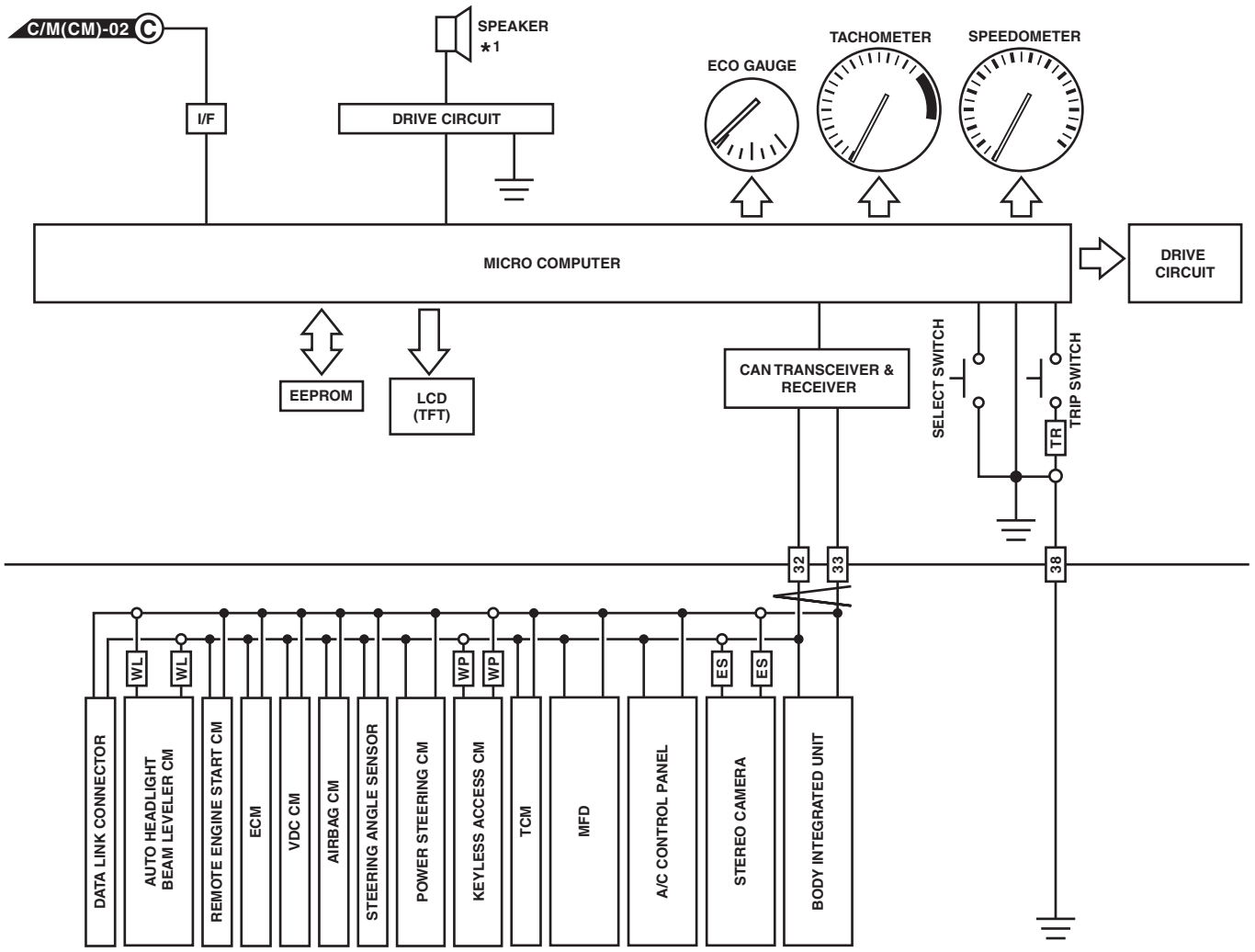

WI-48203

C/M(CM)-05

C/M(CM)-05

TP : WITH TPMS

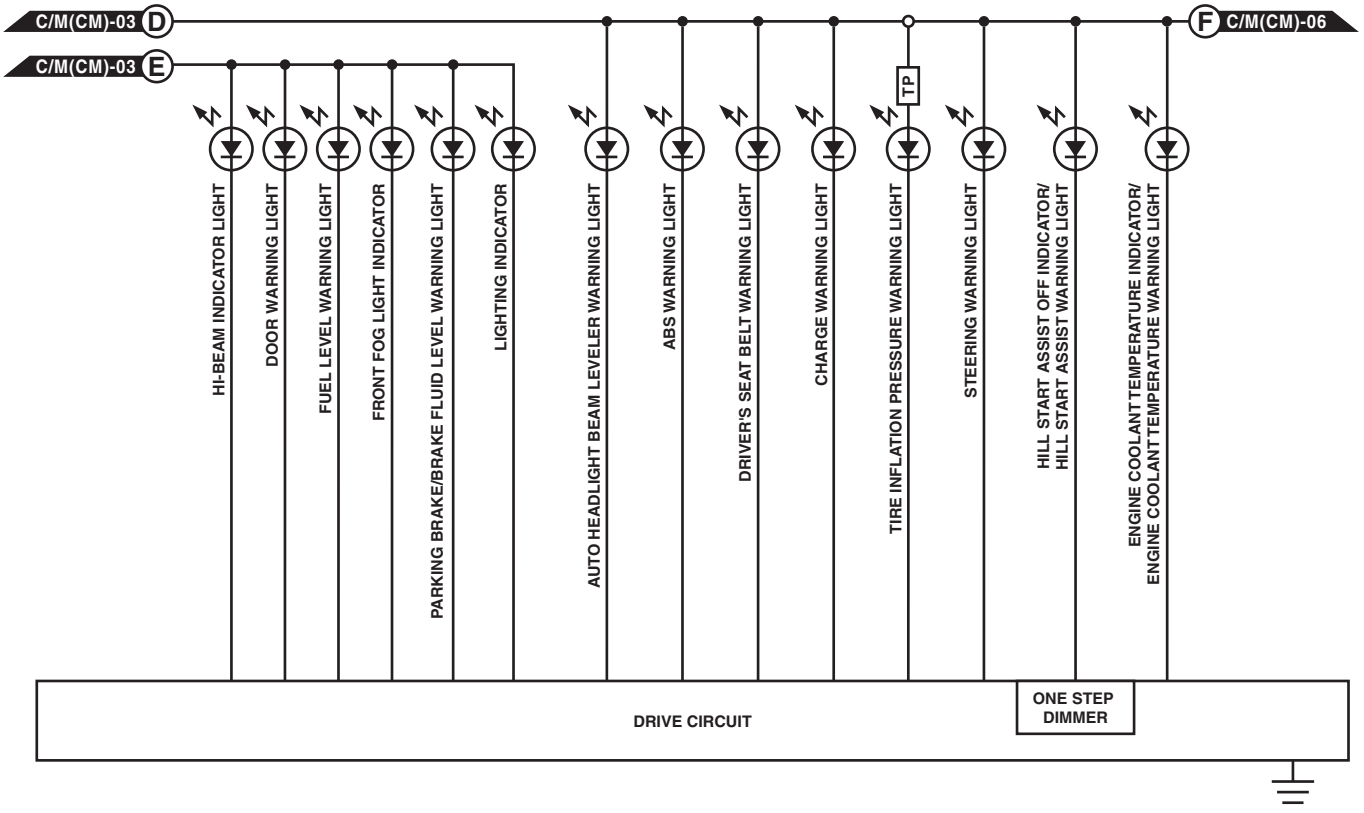

WI-48204

C/M(CM)-06

C/M(CM)-06

ES : WITH EyeSight

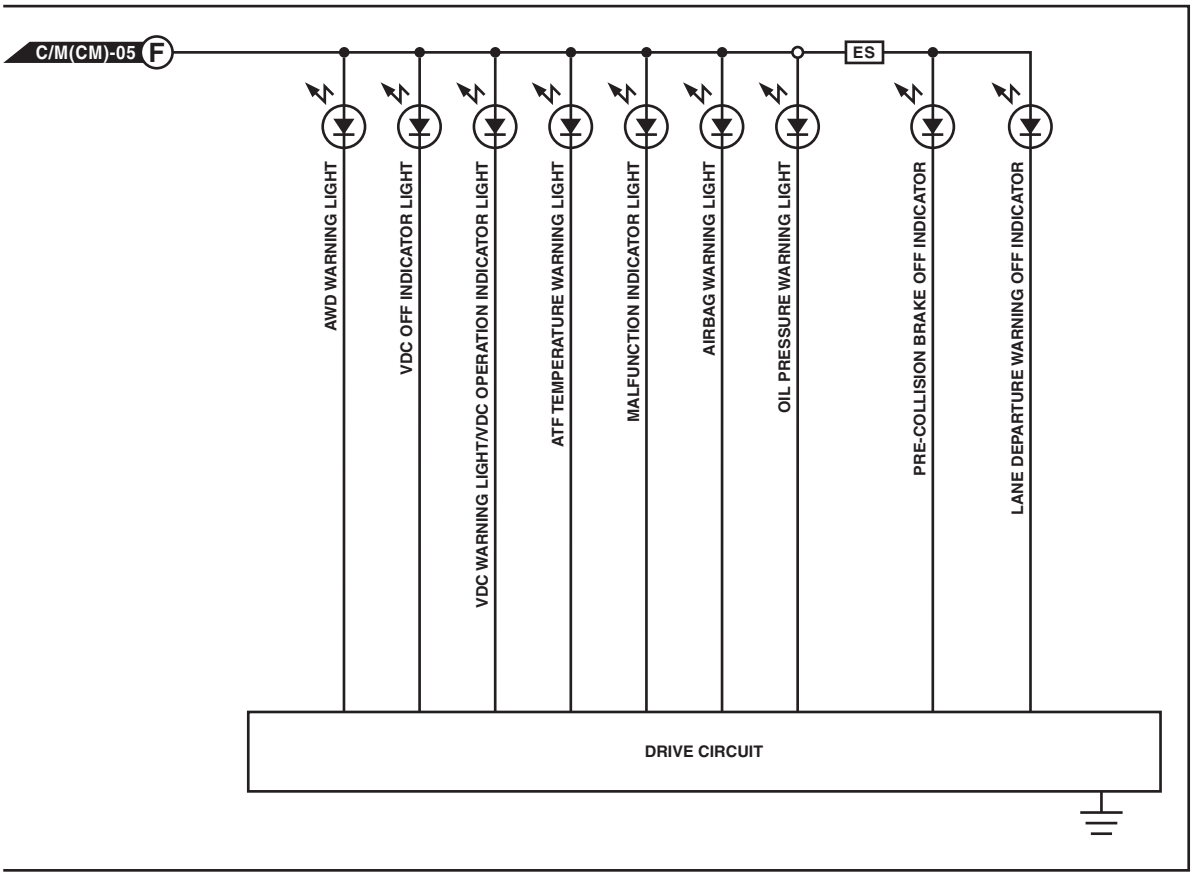

WI-48205

13.Coolant Temperature System

A: WIRING DIAGRAM

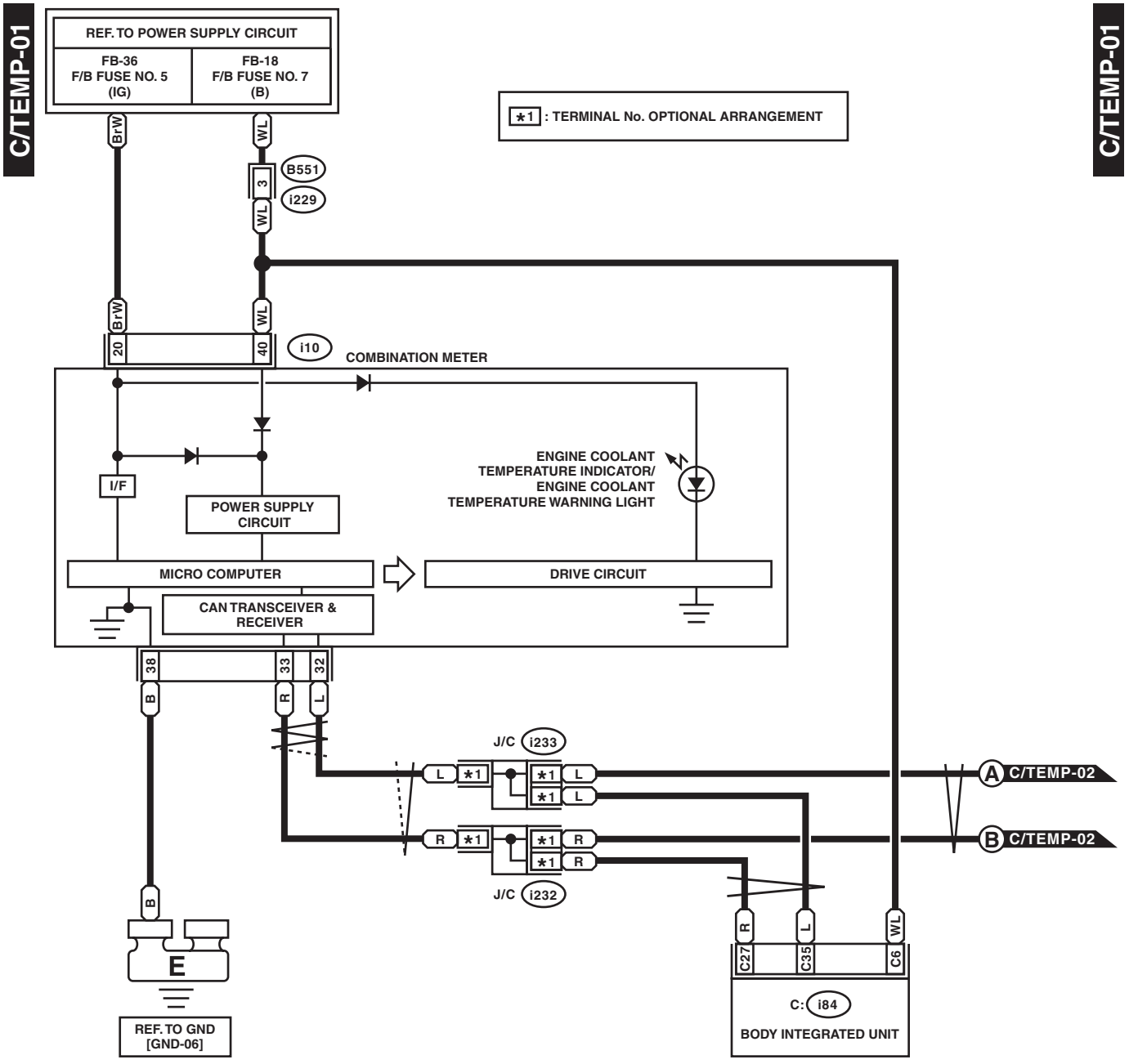

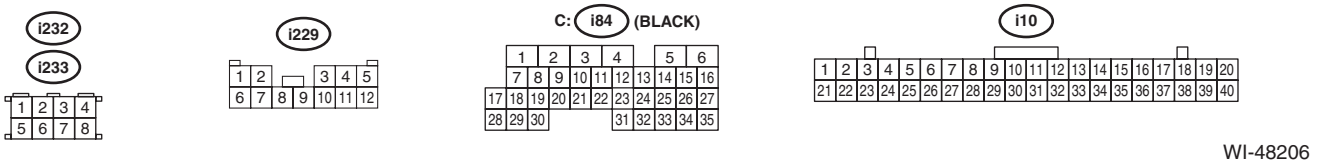

WI-48206

C/TEMP-02

C/TEMP-02

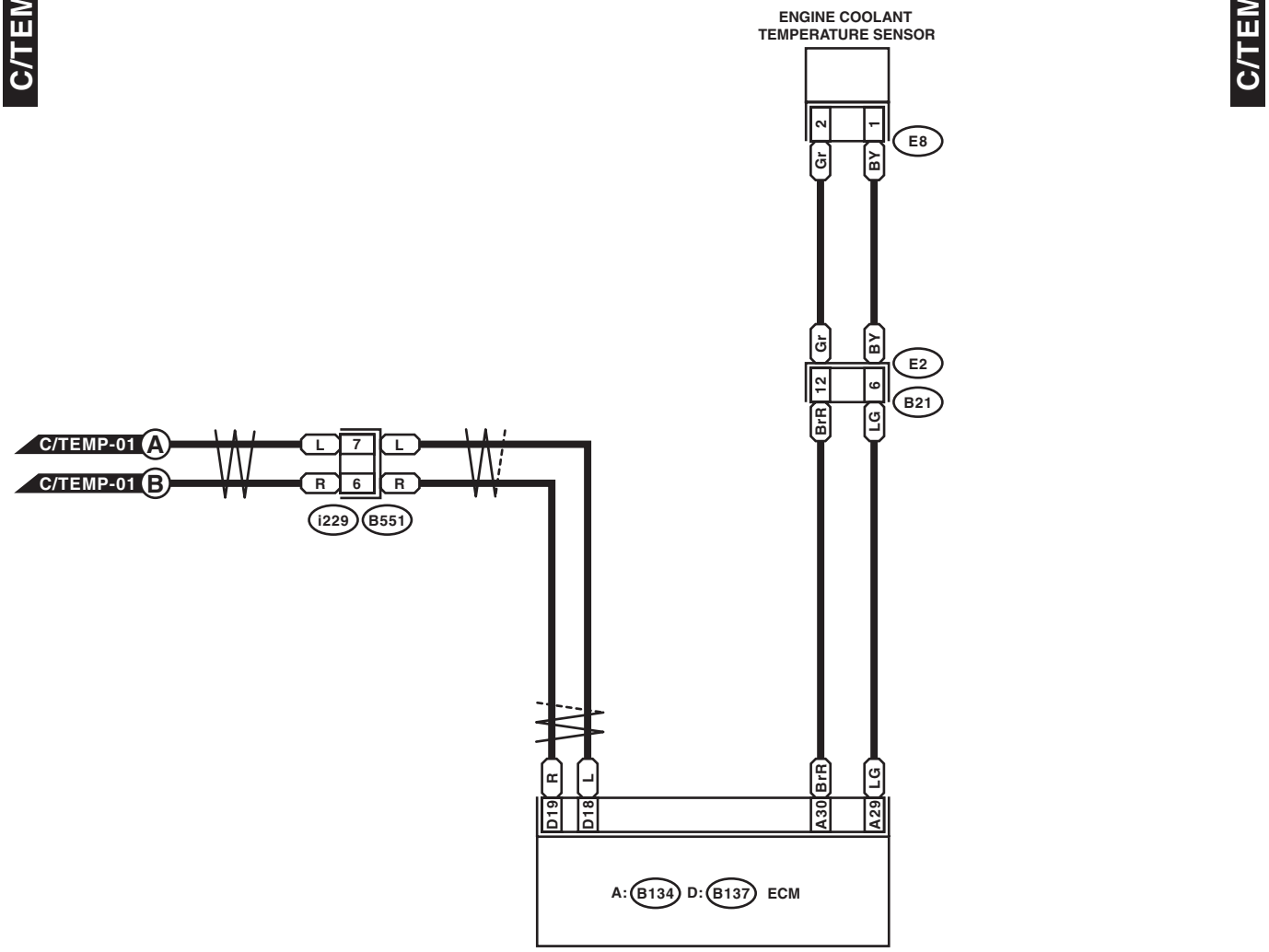

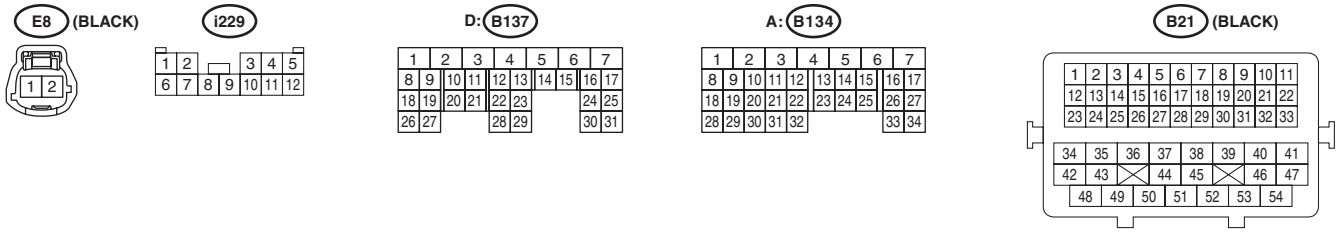

WI-48207

14.Cruise Control System

A: WIRING DIAGRAM

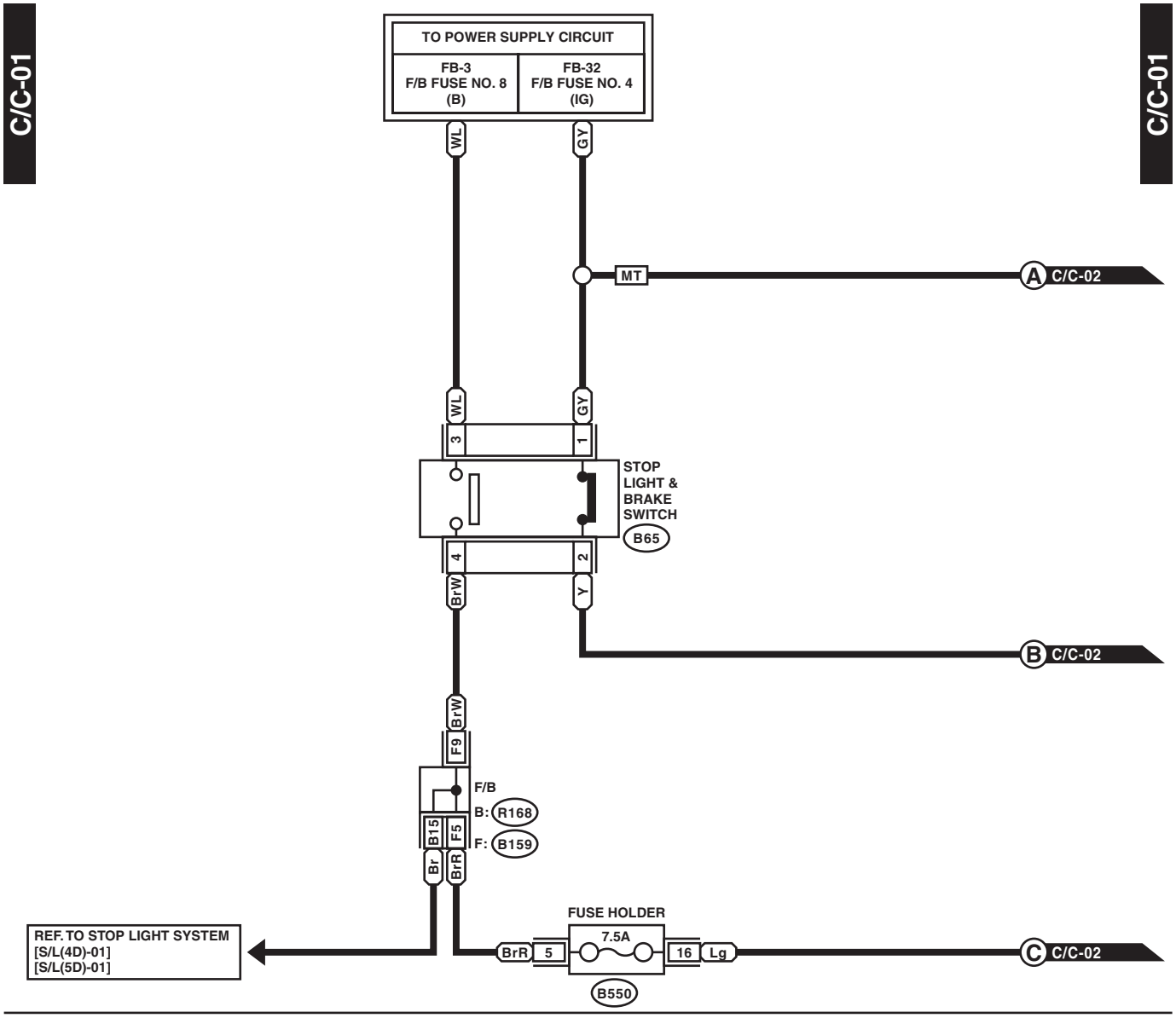

WI-37825

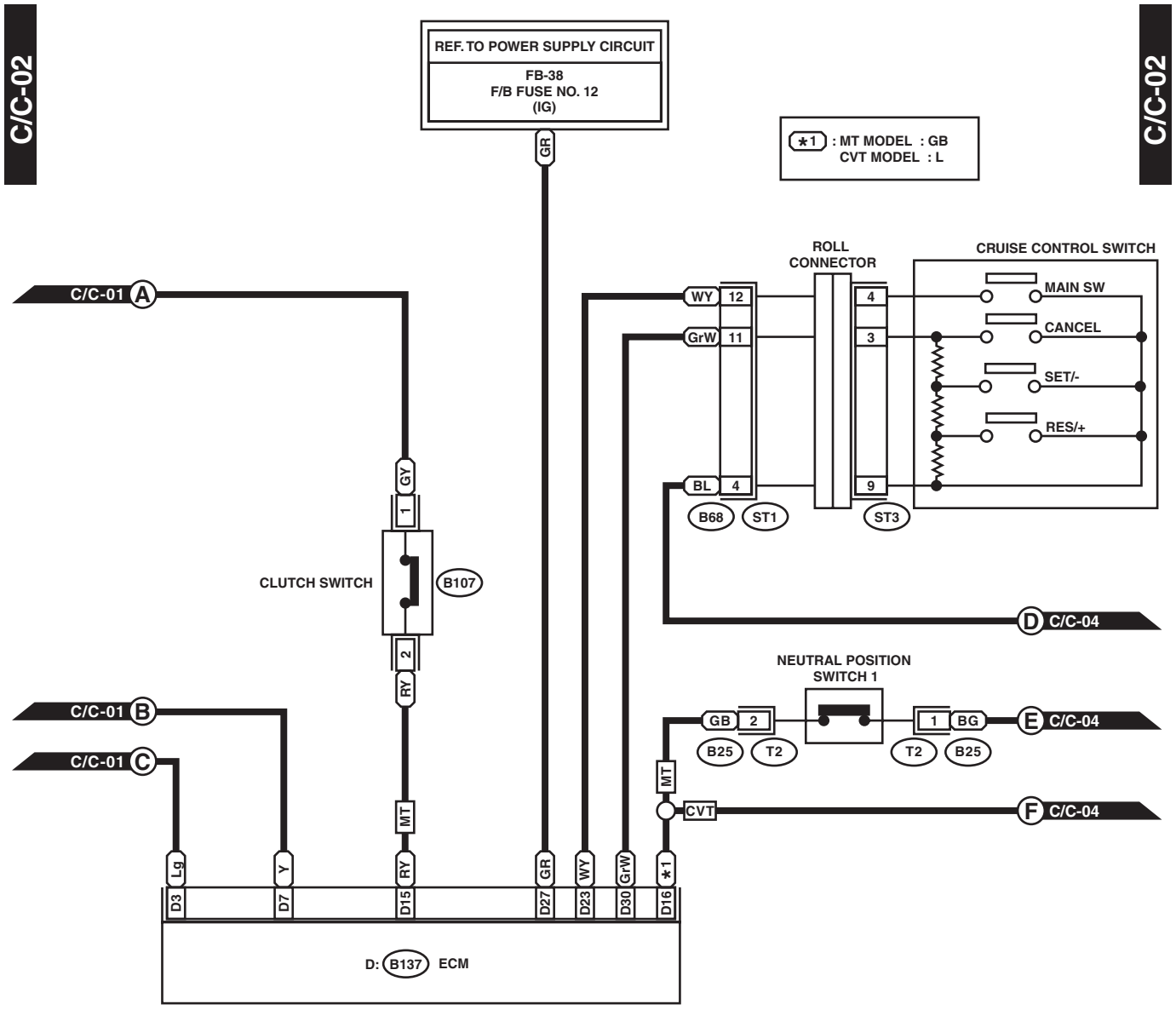
C/C-02
C/C-02
REF. TO POWER SUPPLY CIRCUIT
FB-38
F/B FUSE NO. 12
(IG)
GR
*1 : MT MODEL : GB
CVT MODEL : L
ROLL CONNECTOR
CRUISE CONTROL SWITCH
MAIN SW
CANCEL
SET/-
RES/+
C/C-01 A
WY 12
GrW 11
BL 4
4
3
9
B68
ST1
ST3
D C/C-04
GY
1
CLUTCH SWITCH
B107
2
RY
NEUTRAL POSITION SWITCH 1
C/C-01 B
GB 2
1 BG
E C/C-04
B25
T2
T2
B25
C/C-01 C
MT
CVT
F C/C-04
MT
Lg
Y
RY
GR
WY
GrW
*1
D3
D7
D15
D27
D23
D30
D16
D: B137 ECM

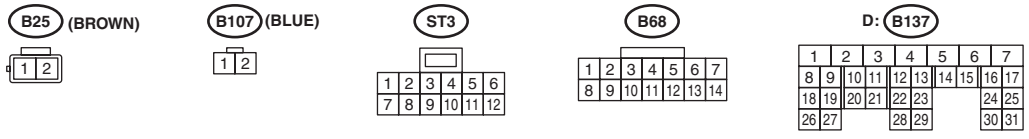
B25 (BROWN)
B107 (BLUE)
ST3
B68
D: B137

WI-48208

C/C-03

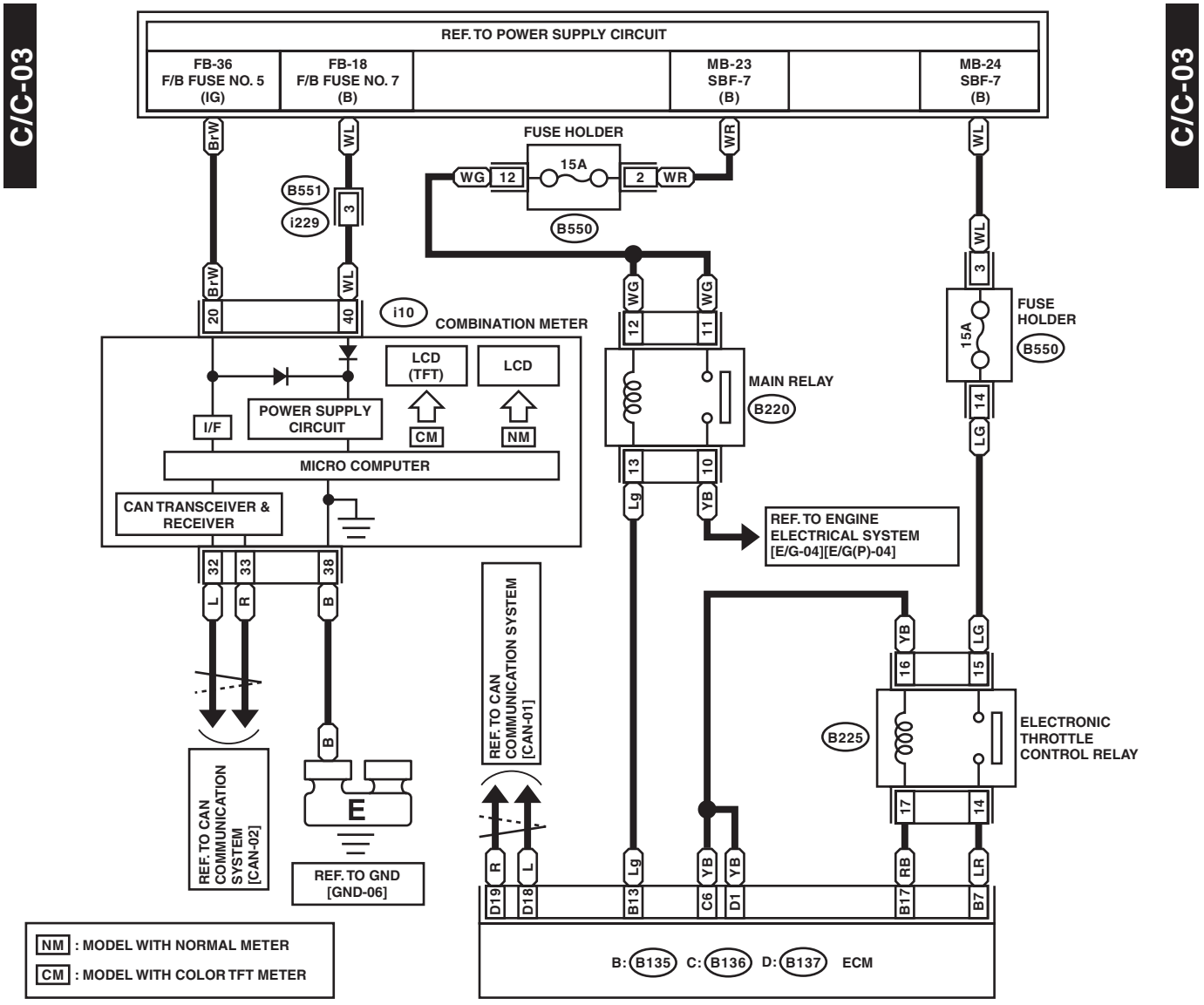

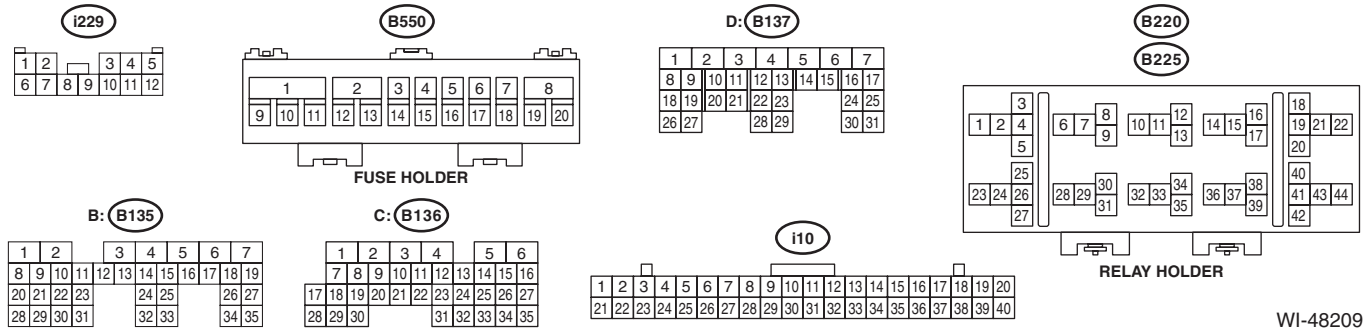

WI-48209

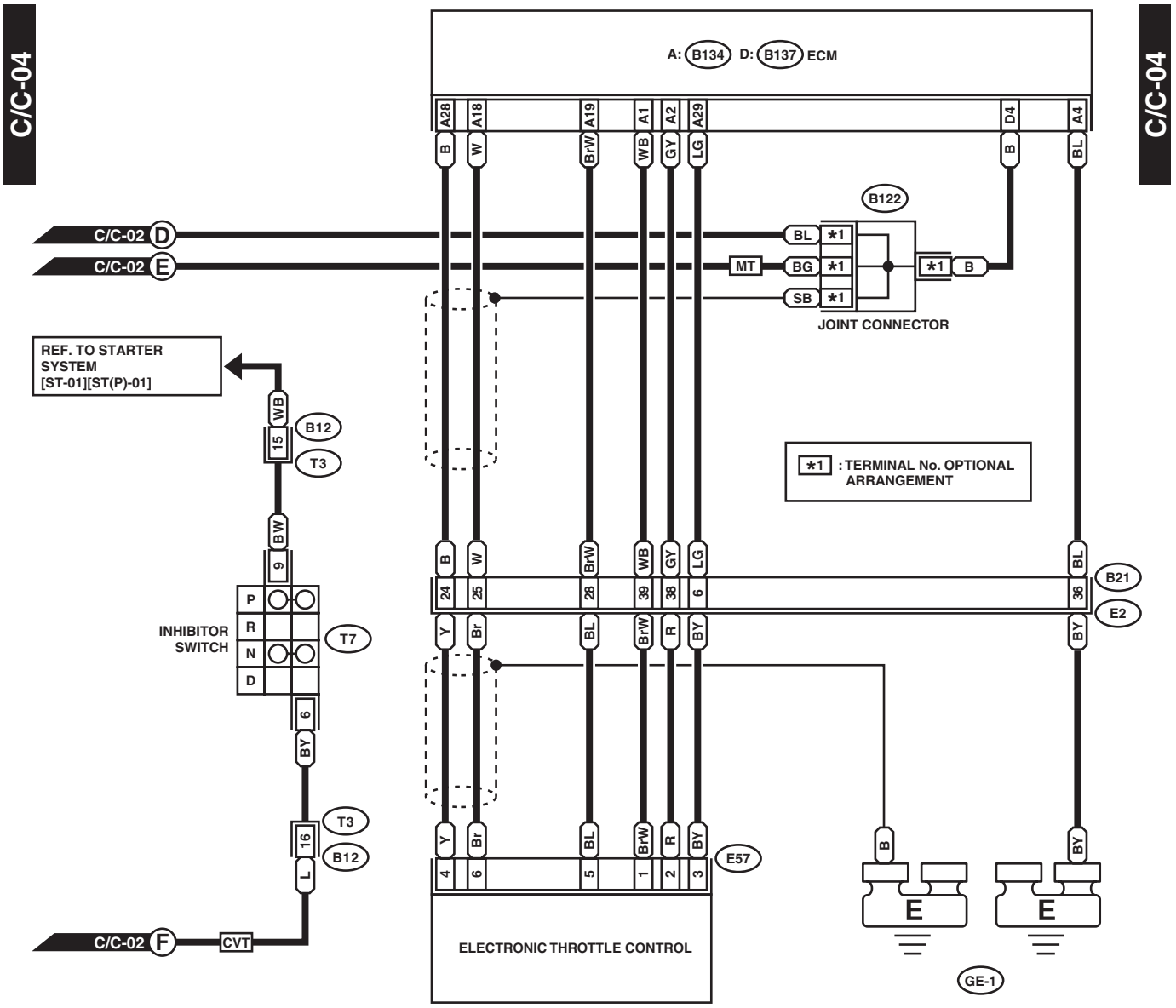
C/C-04
C/C-04
A: B134 D: B137 ECM
A28
A18
A19
A1
A2
A29
D4
A4
B
W
BrW
WB
GY
LG
B
BL
B122
C/C-02 D
C/C-02 E
BL *1
MT
BG *1
SB *1
*1 B
JOINT CONNECTOR
REF. TO STARTER SYSTEM [ST-01][ST(P)-01]
WB
15
B12
T3
*1 : TERMINAL No. OPTIONAL ARRANGEMENT
BW
9
B
W
BrW
WB
GY
LG
BL
B21
24
25
28
39
38
6
36
E2
P
R
N
D
INHIBITOR SWITCH
T7
Y
Br
BL
BrW
R
BY
BY
6
BY
T3
16
B12
L
Y
Br
BL
BrW
R
BY
B
BY
4
6
5
1
2
3
E57
C/C-02 F
CVT
ELECTRONIC THROTTLE CONTROL
E
E
GE-1

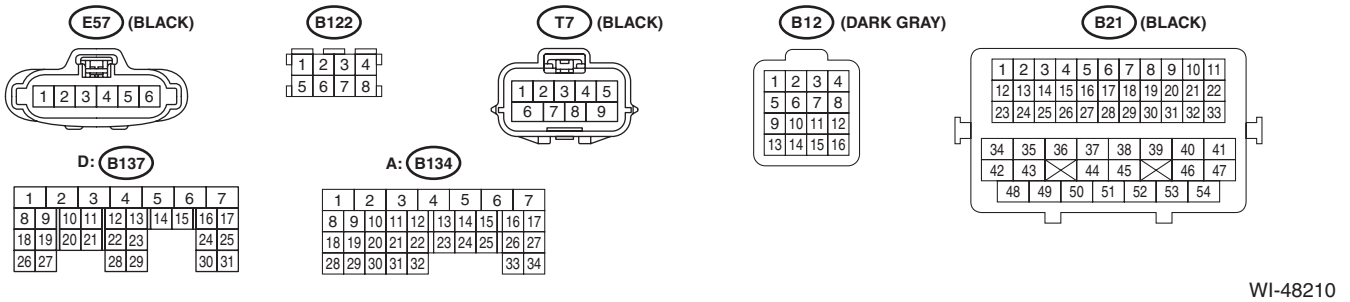
E57 (BLACK)
1 2 3 4 5 6
B122
1 2 3 4
5 6 7 8
T7 (BLACK)
1 2 3 4 5
6 7 8 9
B12 (DARK GRAY)
1 2 3 4
5 6 7 8
9 10 11 12
13 14 15 16
B21 (BLACK)
1 2 3 4 5 6 7 8 9 10 11
12 13 14 15 16 17 18 19 20 21 22
23 24 25 26 27 28 29 30 31 32 33
34 35 36 37 38 39 40 41
42 43 44 45 46 47
48 49 50 51 52 53 54
D: B137
1 2 3 4 5 6 7
8 9 10 11 12 13 14 15 16 17
18 19 20 21 22 23 24 25
26 27 28 29 30 31
A: B134
1 2 3 4 5 6 7
8 9 10 11 12 13 14 15 16 17
18 19 20 21 22 23 24 25 26 27
28 29 30 31 32 33 34

WI-48210

15.CVT Control System

A: WIRING DIAGRAM

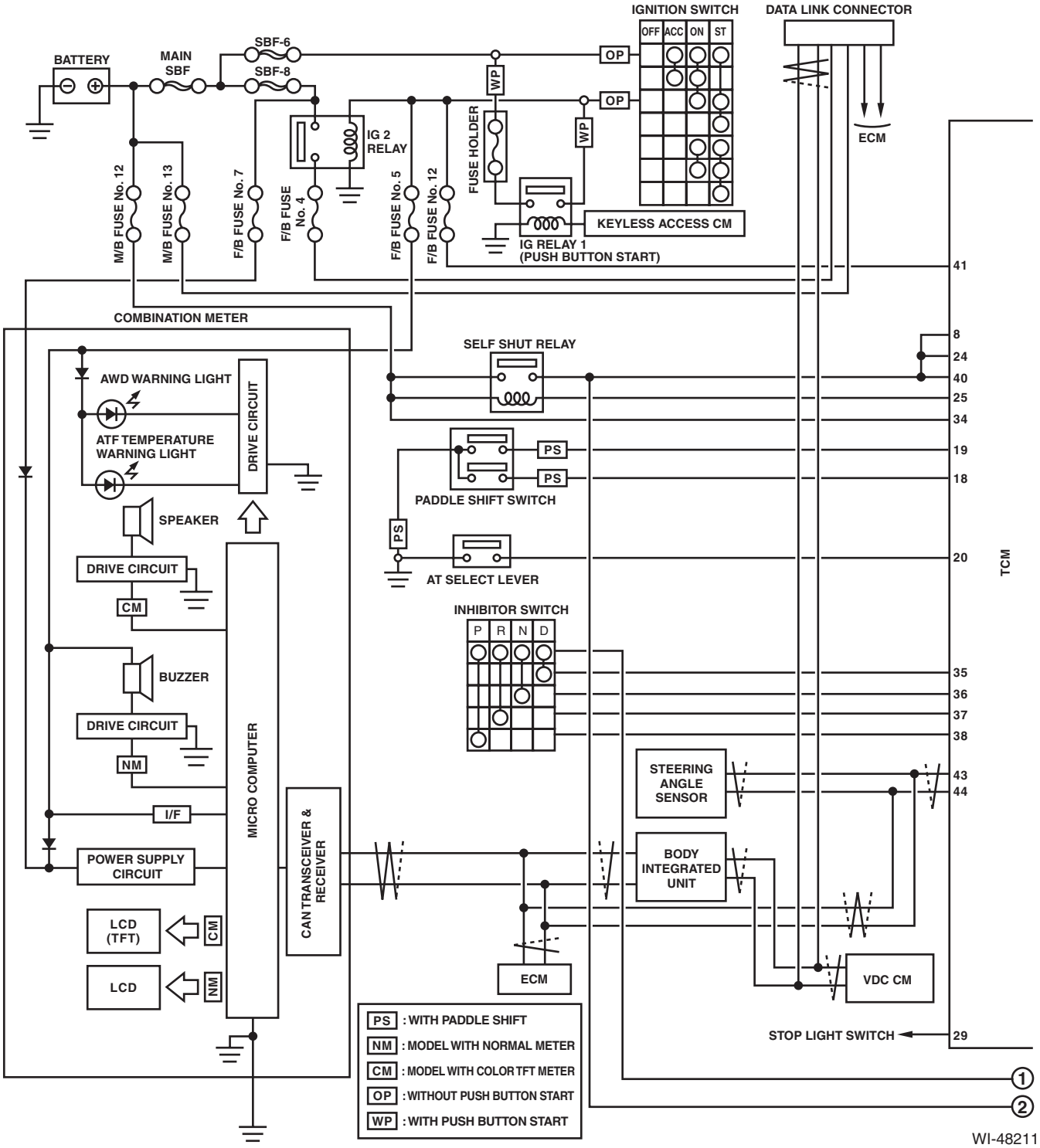

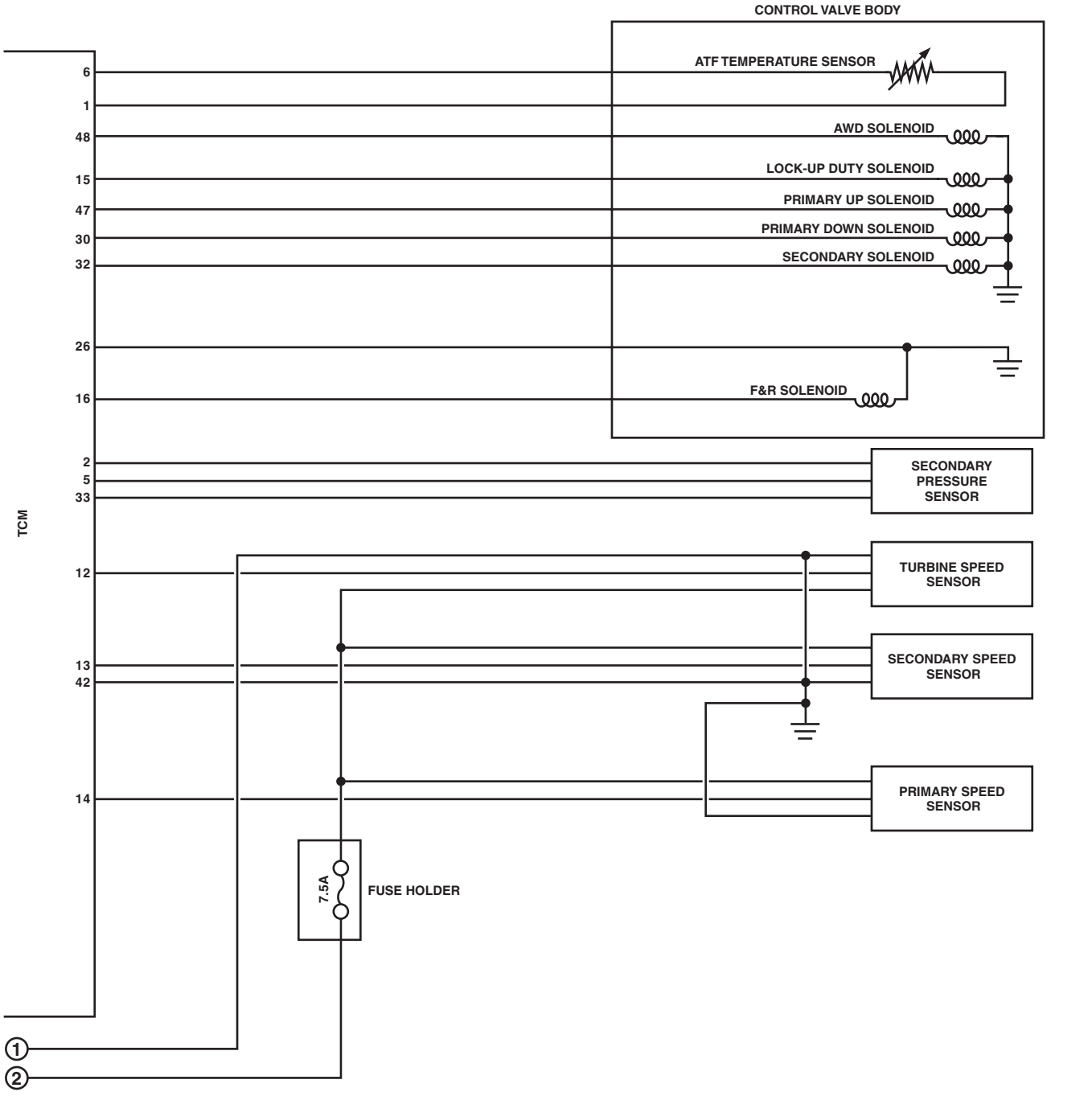
CONTROL VALVE BODY
ATF TEMPERATURE SENSOR
AWD SOLENOID
LOCK-UP DUTY SOLENOID
PRIMARY UP SOLENOID
PRIMARY DOWN SOLENOID
SECONDARY SOLENOID
F&R SOLENOID
TCM
6
1
48
15
47
30
32
26
16
2
5
33
12
13
42
14
SECONDARY PRESSURE SENSOR
TURBINE SPEED SENSOR
SECONDARY SPEED SENSOR
PRIMARY SPEED SENSOR
7.5A
FUSE HOLDER
1
2

WI-48212

CVT-01

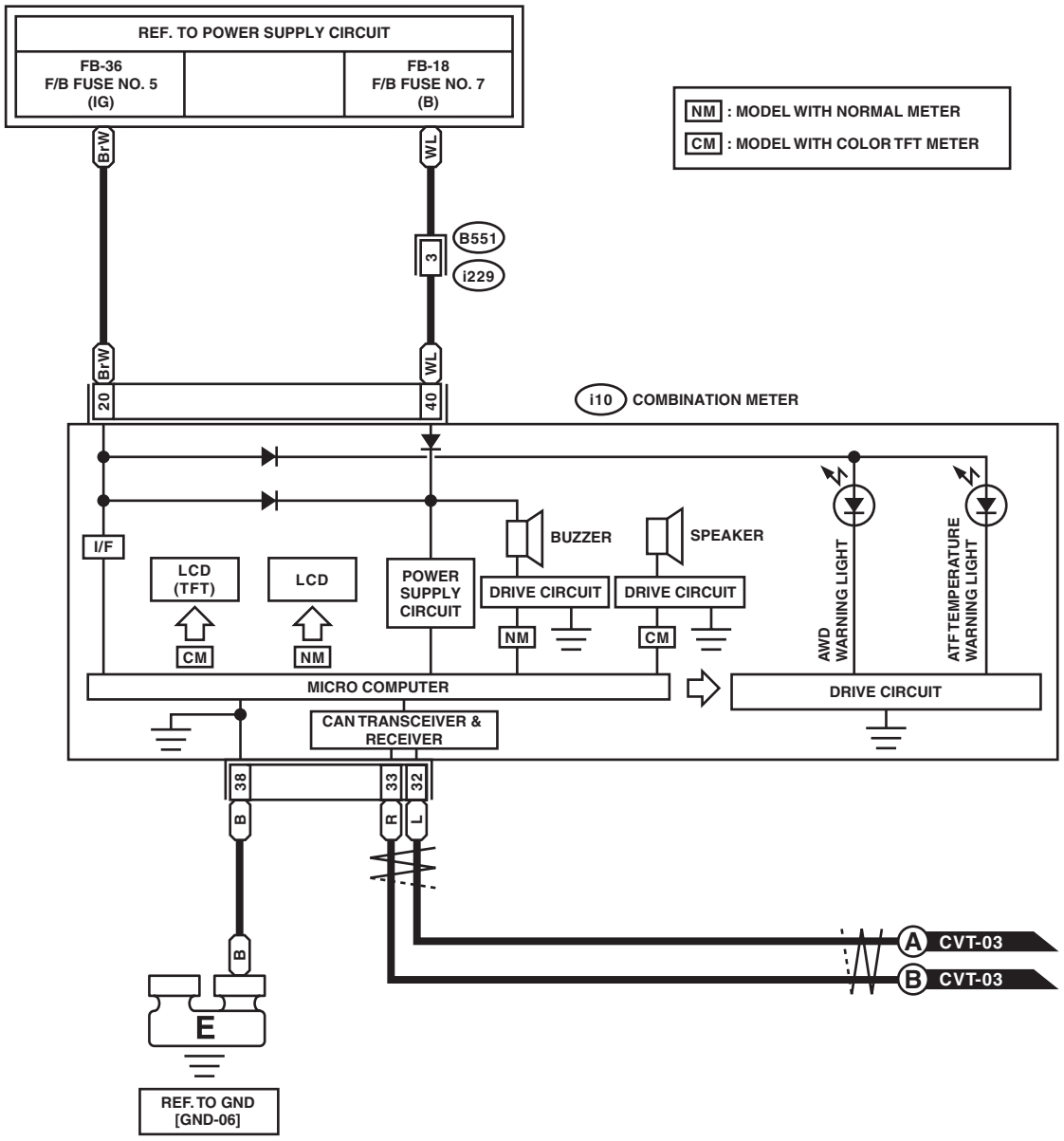

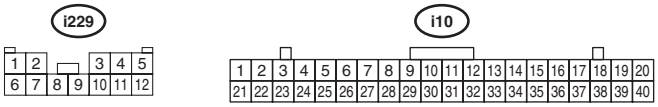

WI-48213

CVT-02

CVT-02

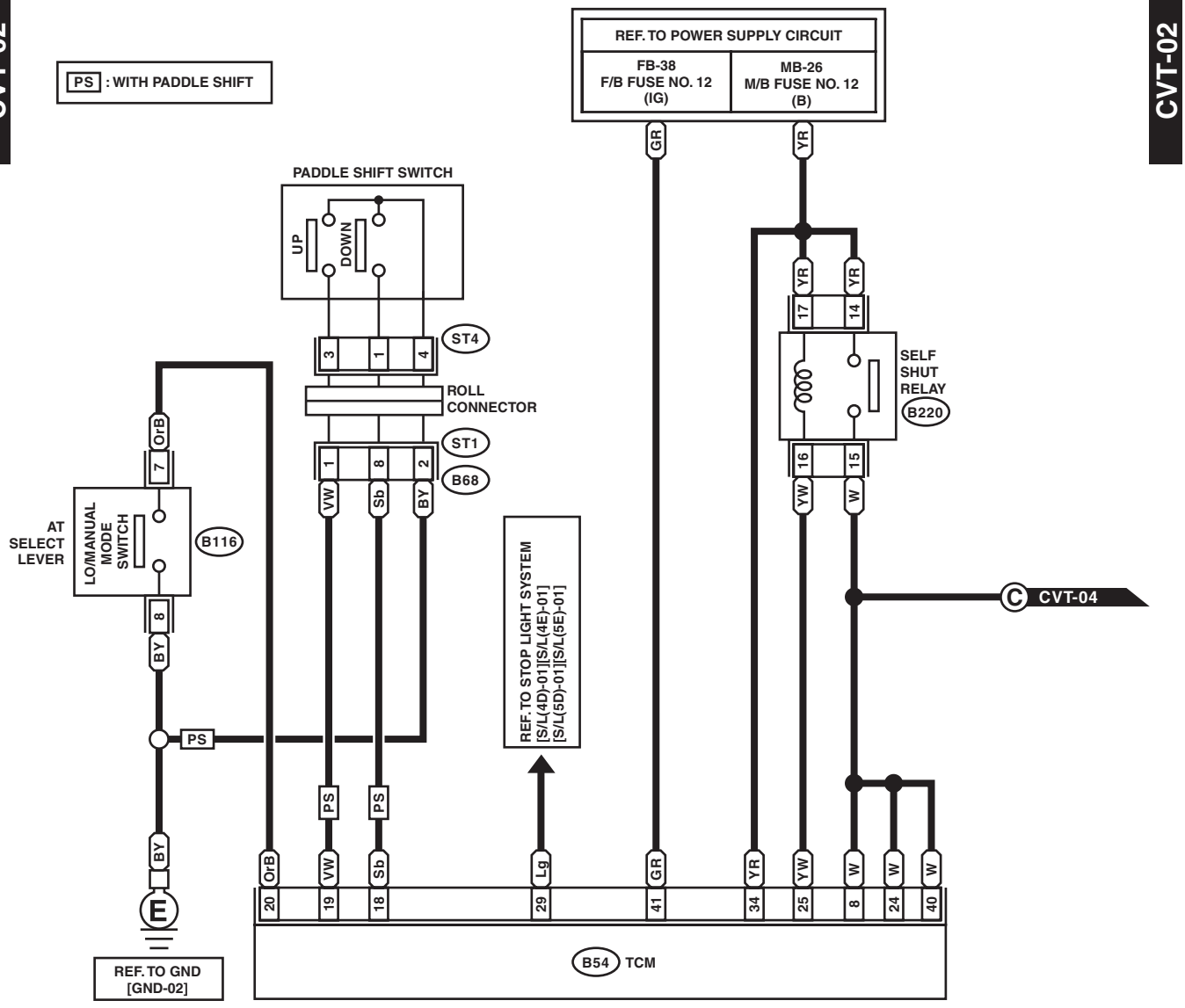

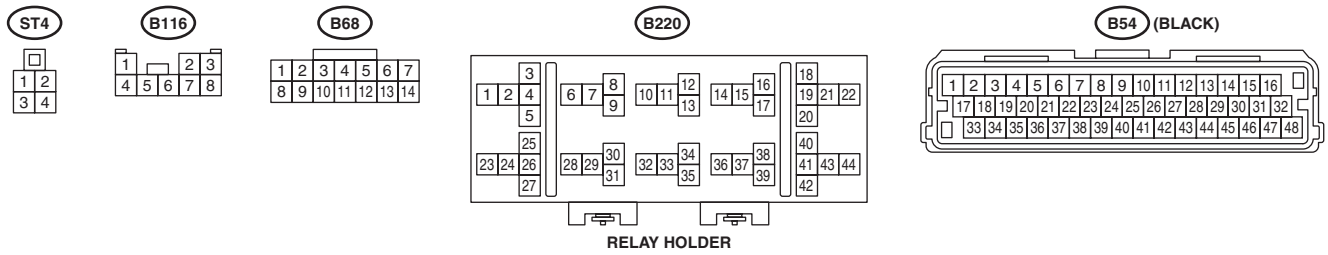

WI-48214

WIRING SYSTEM

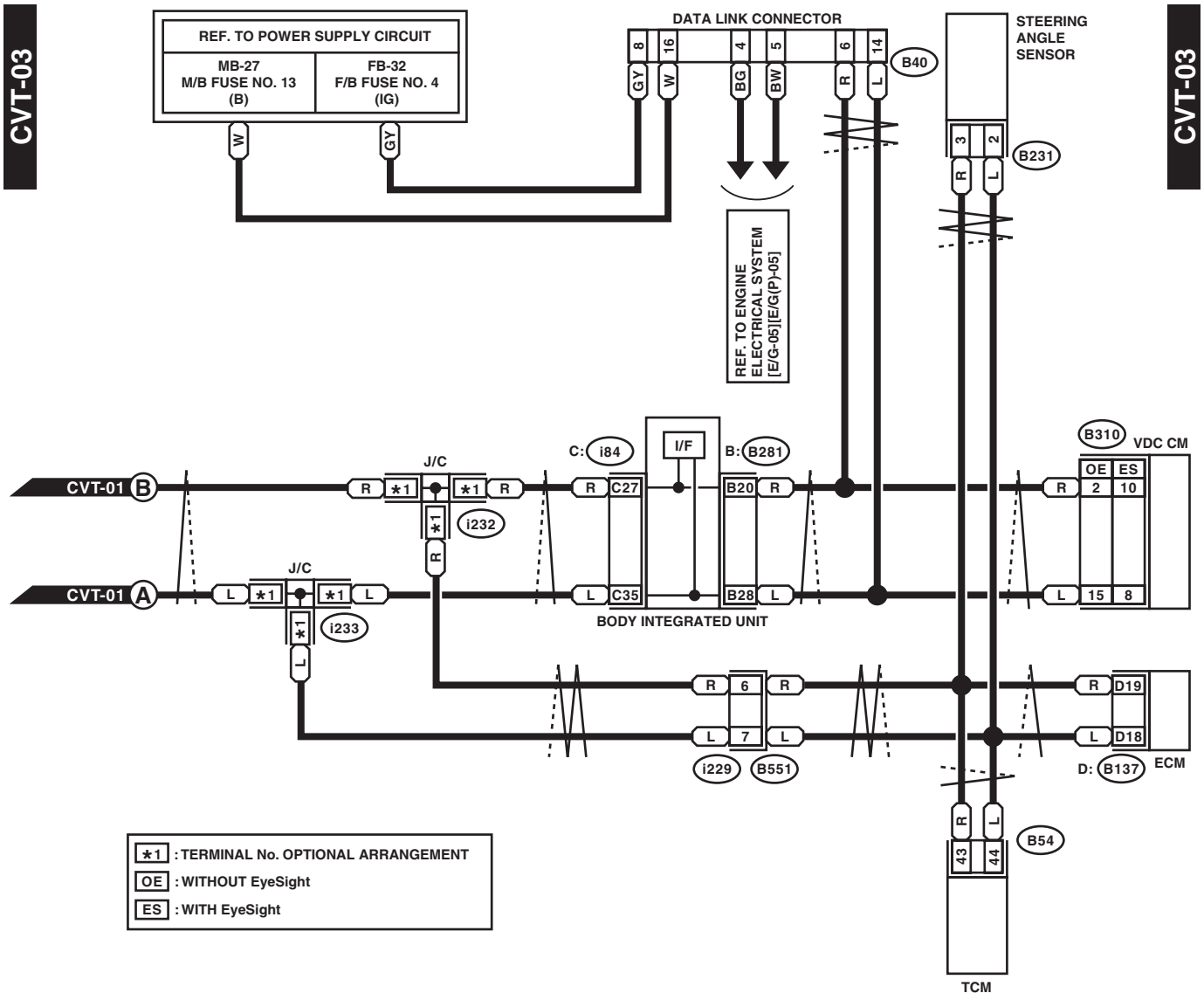

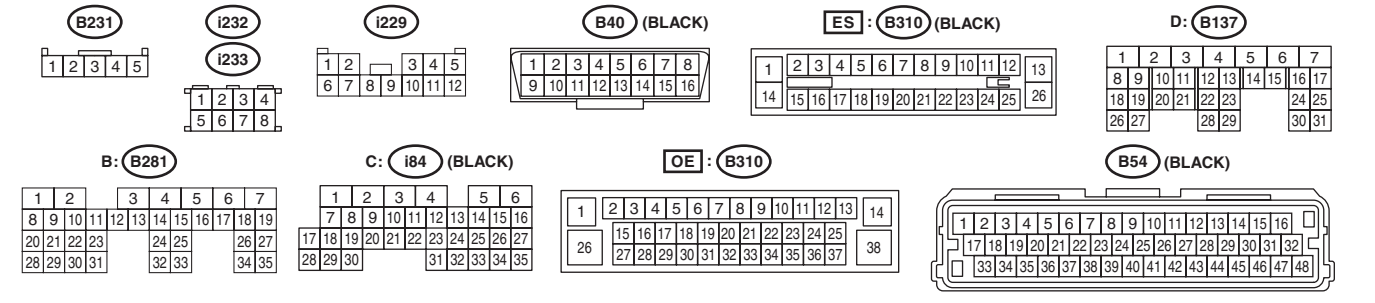

WI-48215

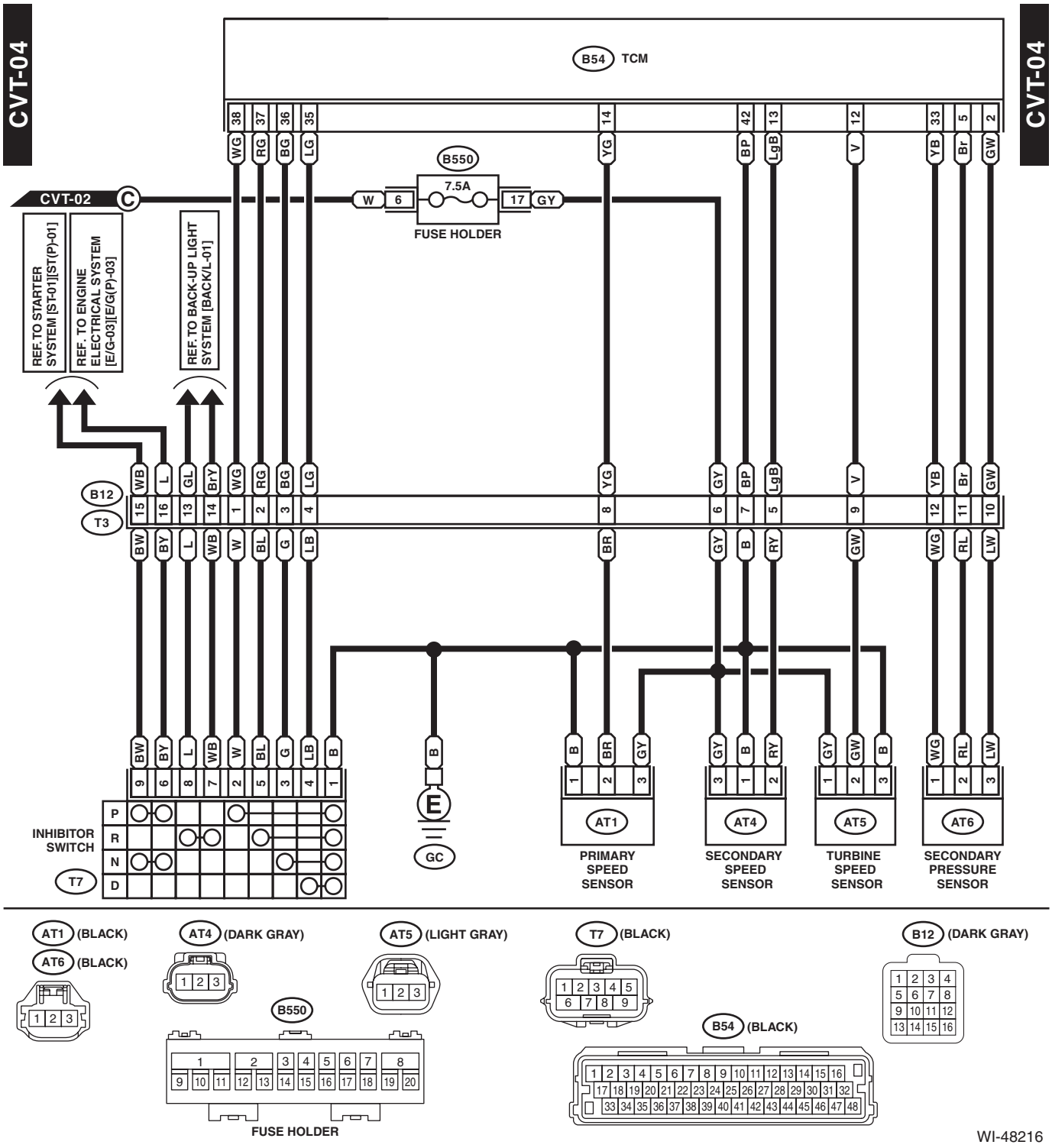
CVT-04
CVT-04
B54 TCM
B550
7.5A
FUSE HOLDER
CVT-02
REF. TO STARTER SYSTEM [ST-01][ST(P)-01]
REF. TO ENGINE ELECTRICAL SYSTEM [E/G-03][E/G(P)-03]
REF. TO BACK-UP LIGHT SYSTEM [BACK/L-01]
B12
T3
INHIBITOR SWITCH
T7
P
R
N
D
GC
AT1
PRIMARY SPEED SENSOR
AT4
SECONDARY SPEED SENSOR
AT5
TURBINE SPEED SENSOR
AT6
SECONDARY PRESSURE SENSOR
AT1 (BLACK)
AT6 (BLACK)
AT4 (DARK GRAY)
AT5 (LIGHT GRAY)
T7 (BLACK)
B12 (DARK GRAY)
B550
FUSE HOLDER
B54 (BLACK)
WI-48216

CVT-05

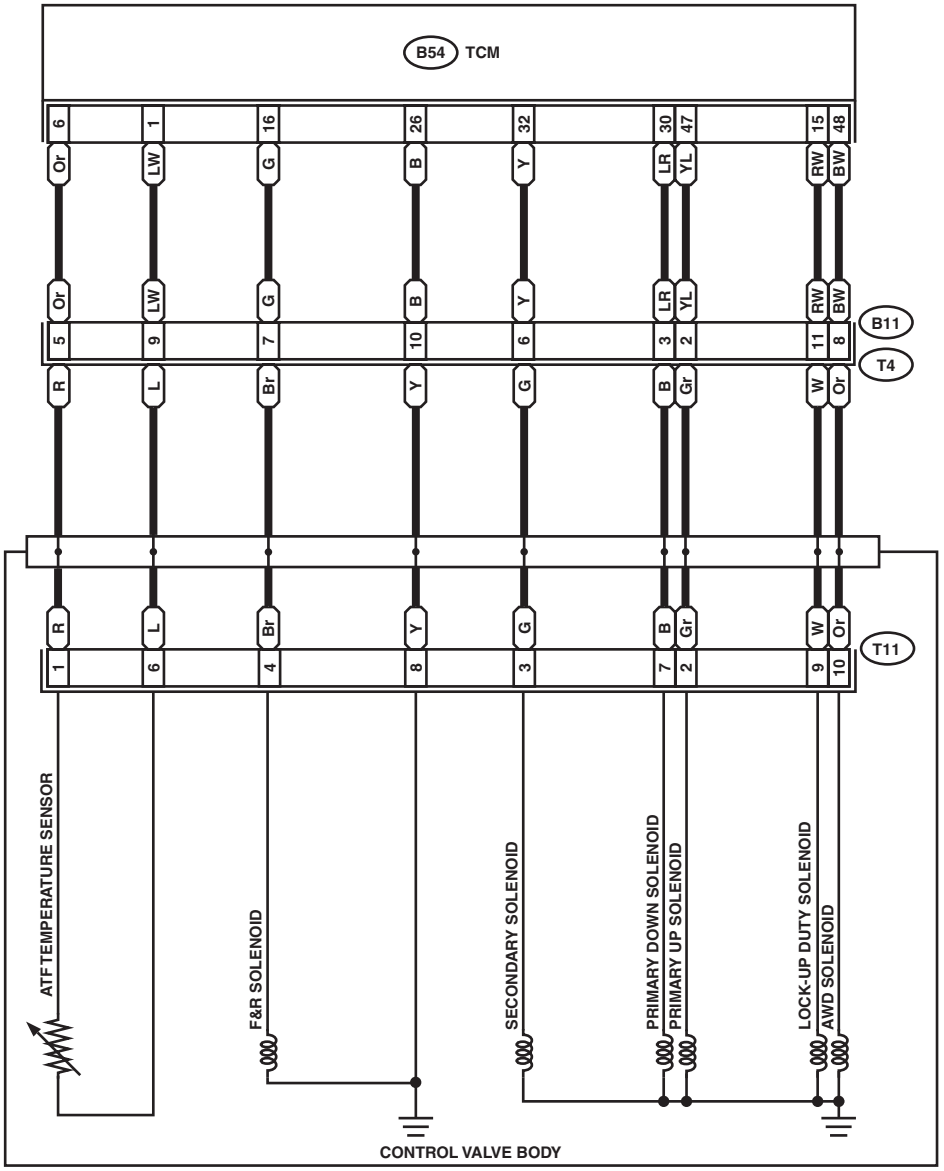

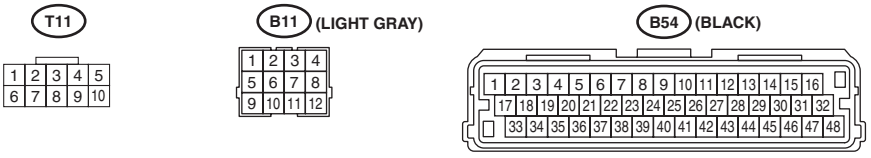

WI-48217

16.Electric Power Steering System

A: WIRING DIAGRAM

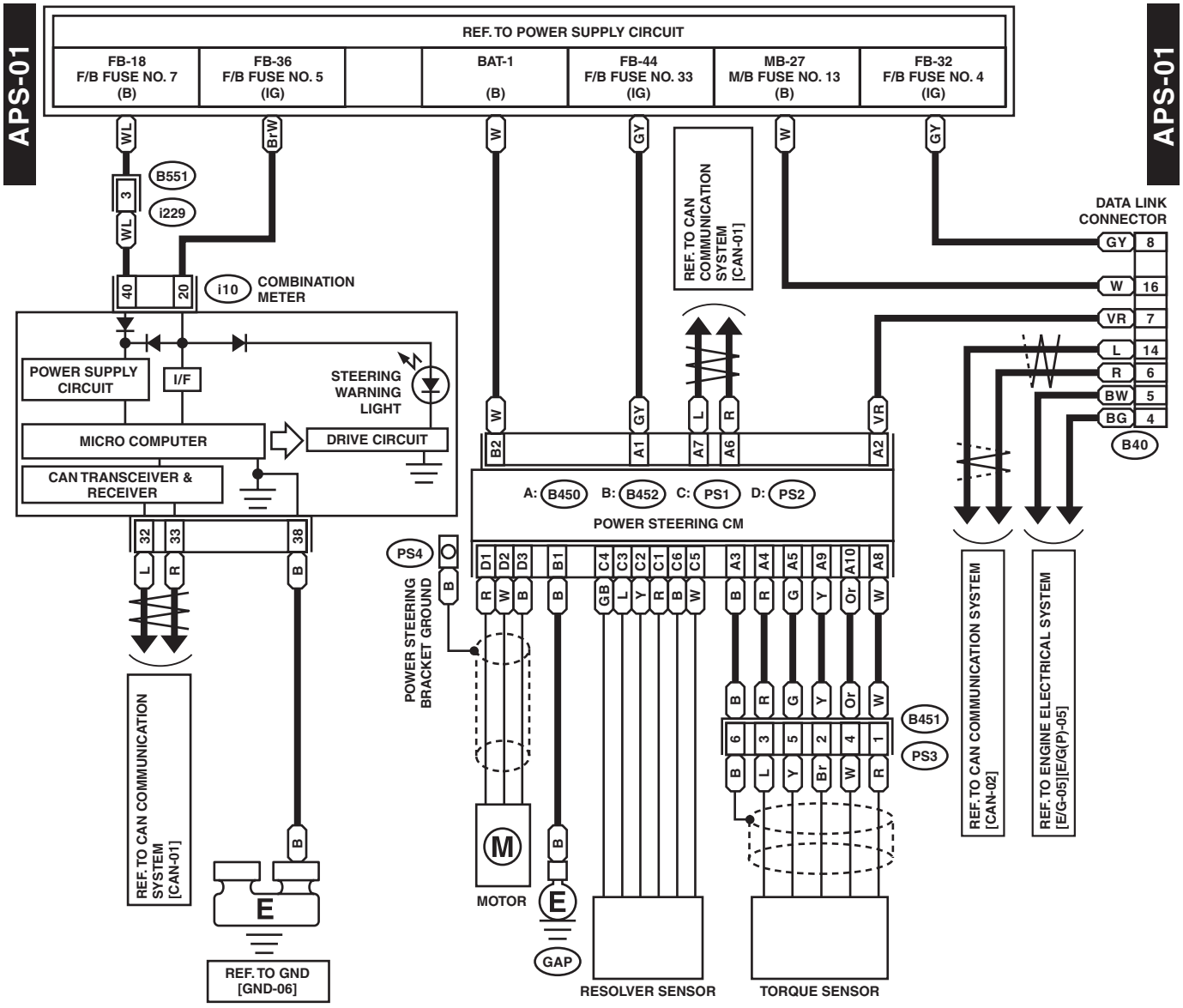

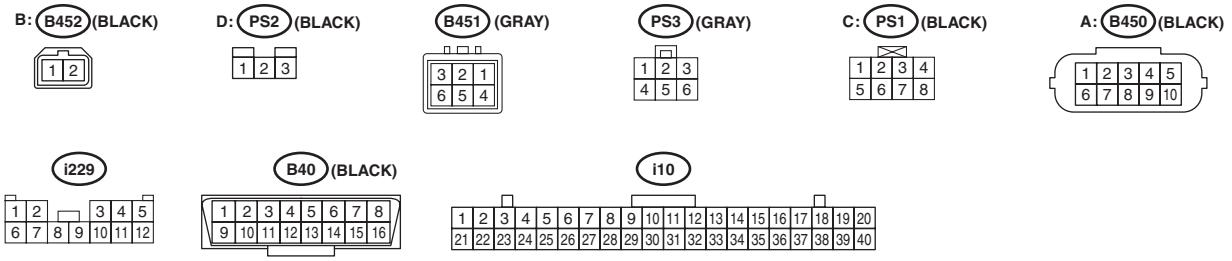

WI-48218

17.Engine Electrical System

A: WIRING DIAGRAM

1. WITHOUT PUSH BUTTON START

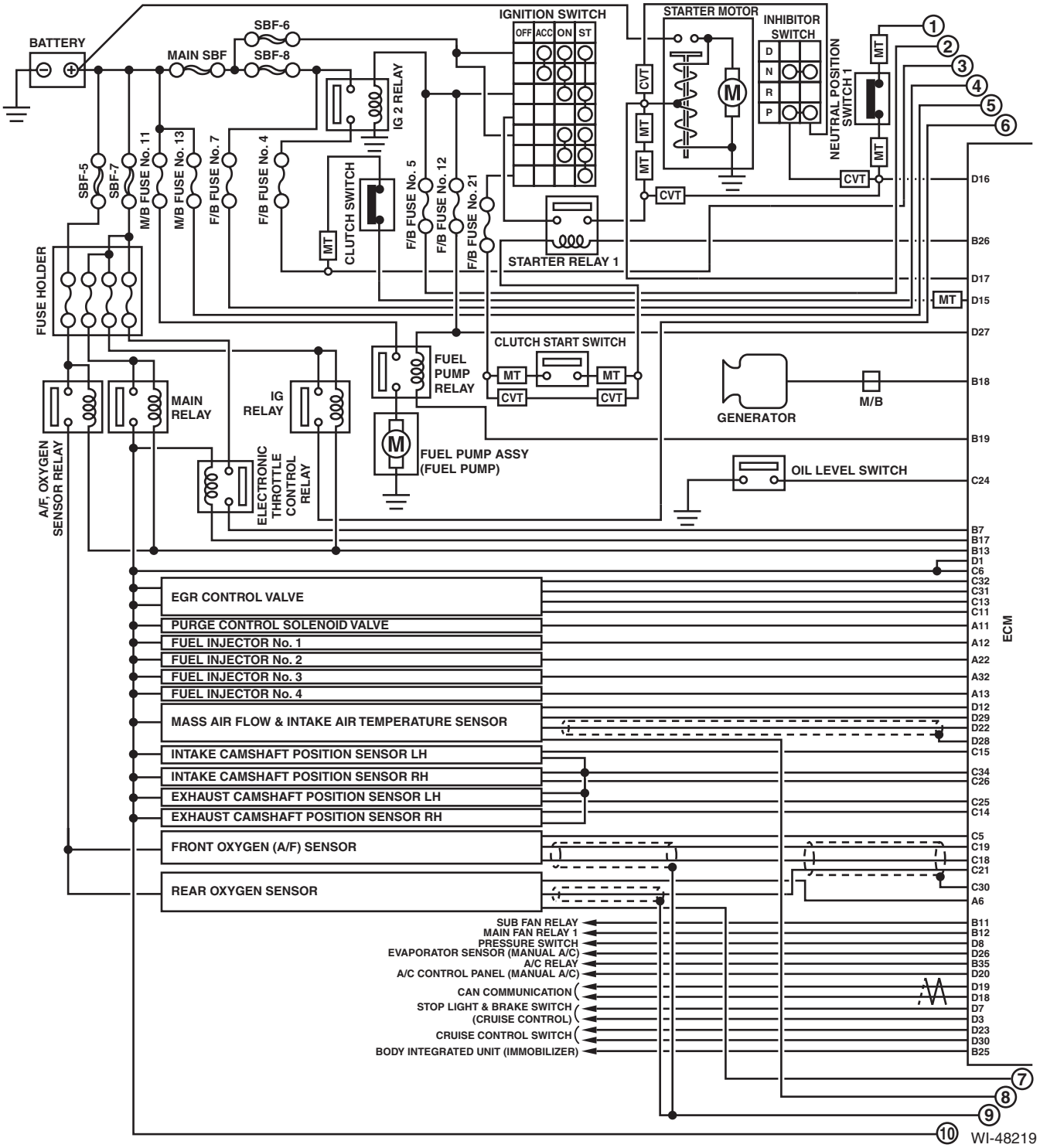

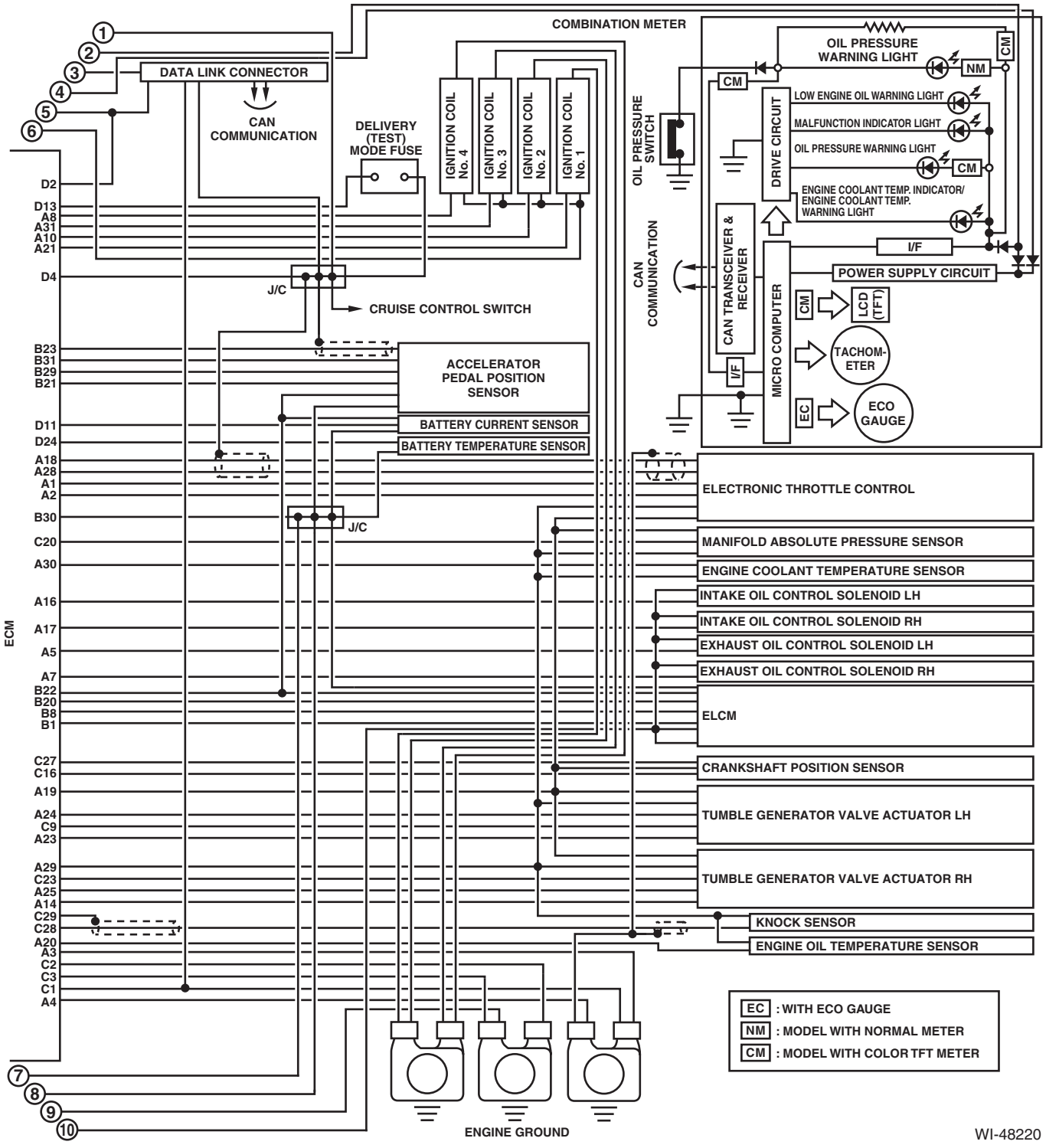
COMBINATION METER
DATA LINK CONNECTOR
CAN COMMUNICATION
DELIVERY (TEST) MODE FUSE
IGNITION COIL No. 4
IGNITION COIL No. 3
IGNITION COIL No. 2
IGNITION COIL No. 1
OIL PRESSURE SWITCH
OIL PRESSURE WARNING LIGHT
LOW ENGINE OIL WARNING LIGHT
MALFUNCTION INDICATOR LIGHT
OIL PRESSURE WARNING LIGHT
ENGINE COOLANT TEMP. INDICATOR/ ENGINE COOLANT TEMP. WARNING LIGHT
DRIVE CIRCUIT
CAN TRANSCEIVER & RECEIVER
MICRO COMPUTER
I/F
POWER SUPPLY CIRCUIT
LCD (TFT)
TACHOM-ETER
ECO GAUGE
CM
NM
EC
J/C
CRUISE CONTROL SWITCH
ACCELERATOR PEDAL POSITION SENSOR
BATTERY CURRENT SENSOR
BATTERY TEMPERATURE SENSOR
ELECTRONIC THROTTLE CONTROL
MANIFOLD ABSOLUTE PRESSURE SENSOR
ENGINE COOLANT TEMPERATURE SENSOR
INTAKE OIL CONTROL SOLENOID LH
INTAKE OIL CONTROL SOLENOID RH
EXHAUST OIL CONTROL SOLENOID LH
EXHAUST OIL CONTROL SOLENOID RH
ELCM
CRANKSHAFT POSITION SENSOR
TUMBLE GENERATOR VALVE ACTUATOR LH
TUMBLE GENERATOR VALVE ACTUATOR RH
KNOCK SENSOR
ENGINE OIL TEMPERATURE SENSOR
ECM
ENGINE GROUND
EC : WITH ECO GAUGE
NM : MODEL WITH NORMAL METER
CM : MODEL WITH COLOR TFT METER
WI-48220

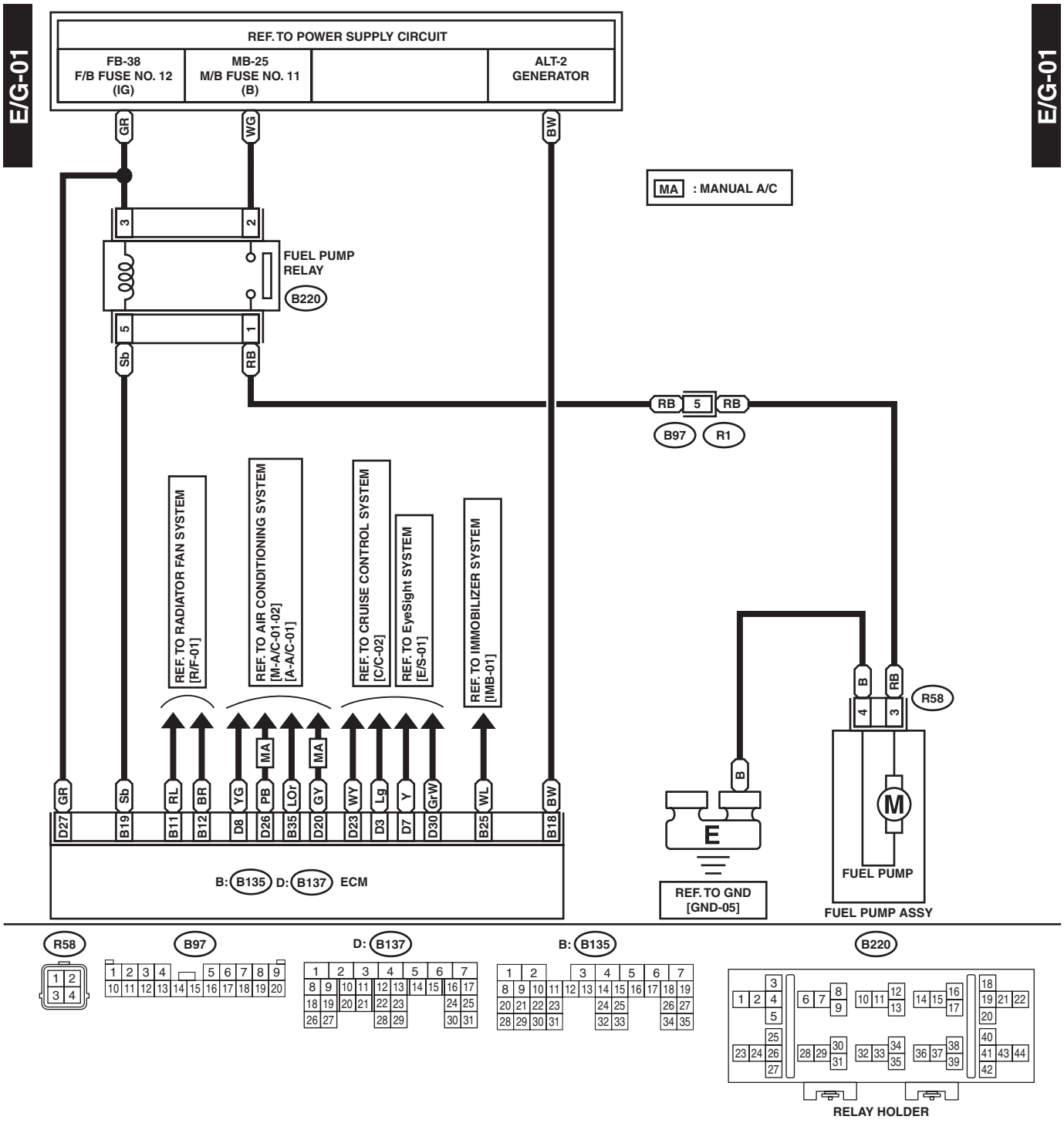
E/G-01
E/G-01
REF. TO POWER SUPPLY CIRCUIT
FB-38
F/B FUSE NO. 12
(IG)
MB-25
M/B FUSE NO. 11
(B)
ALT-2
GENERATOR
GR
WG
BW
MA : MANUAL A/C
FUEL PUMP
RELAY
B220
Sb
RB
RB
5
RB
B97
R1
REF. TO RADIATOR FAN SYSTEM
[R/F-01]
REF. TO AIR CONDITIONING SYSTEM
[M-A/C-01-02]
[A-A/C-01]
REF. TO CRUISE CONTROL SYSTEM
[C/C-02]
REF. TO EyeSight SYSTEM
[E/S-01]
REF. TO IMMOBILIZER SYSTEM
[IMB-01]
B
RB
R58
GR
Sb
RL
BR
YG
PB
LOr
GY
WY
Lg
Y
GrW
WL
BW
MA
MA
D27
B19
B11
B12
D8
D26
B35
D20
D23
D3
D7
D30
B25
B18
B: B135 D: B137 ECM
B
E
REF. TO GND
[GND-05]
M
FUEL PUMP
FUEL PUMP ASSY
R58
B97
D: B137
B: B135
B220
RELAY HOLDER

WI-48221

E/G-02

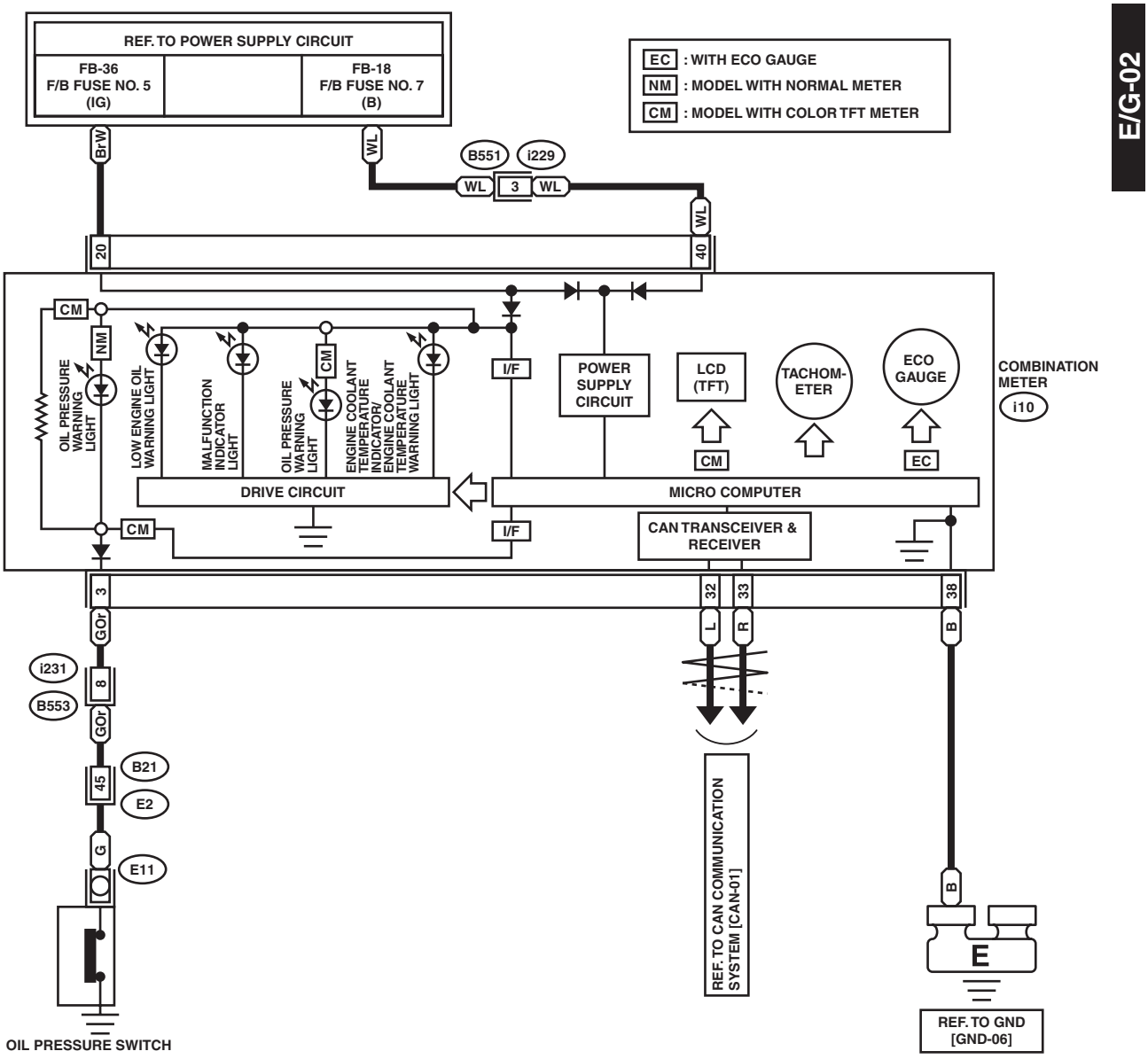

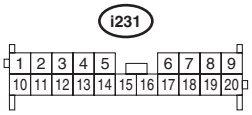

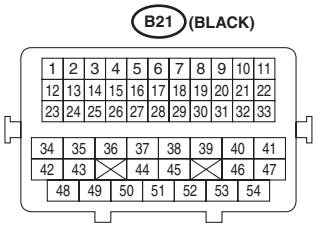

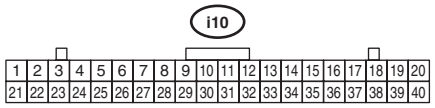

WI-48222

WIRING SYSTEM

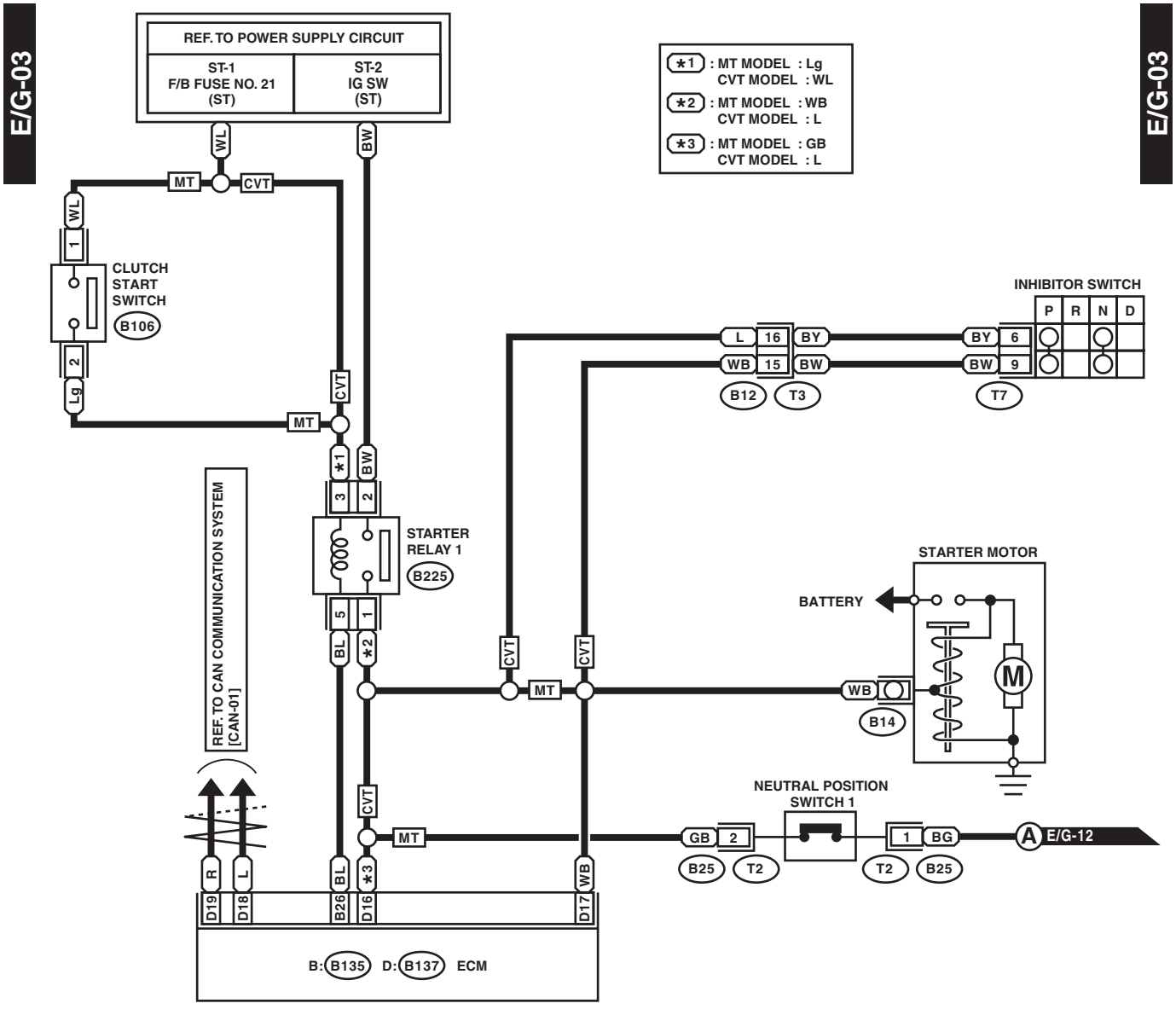

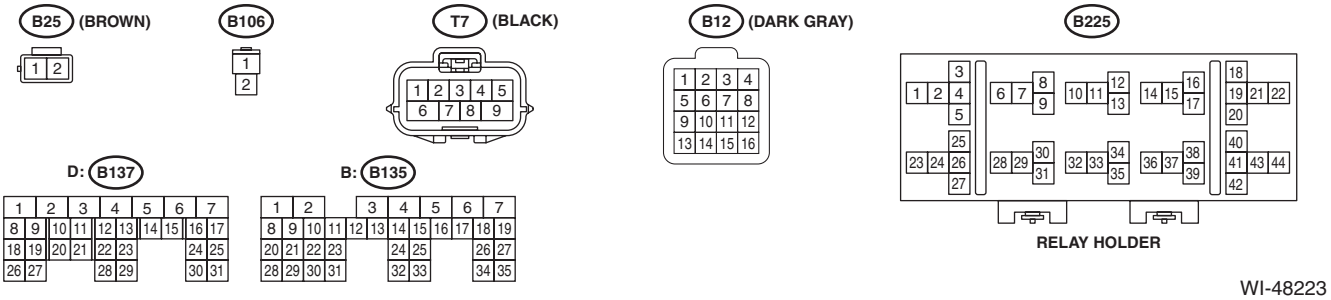

WI-48223

E/G-04

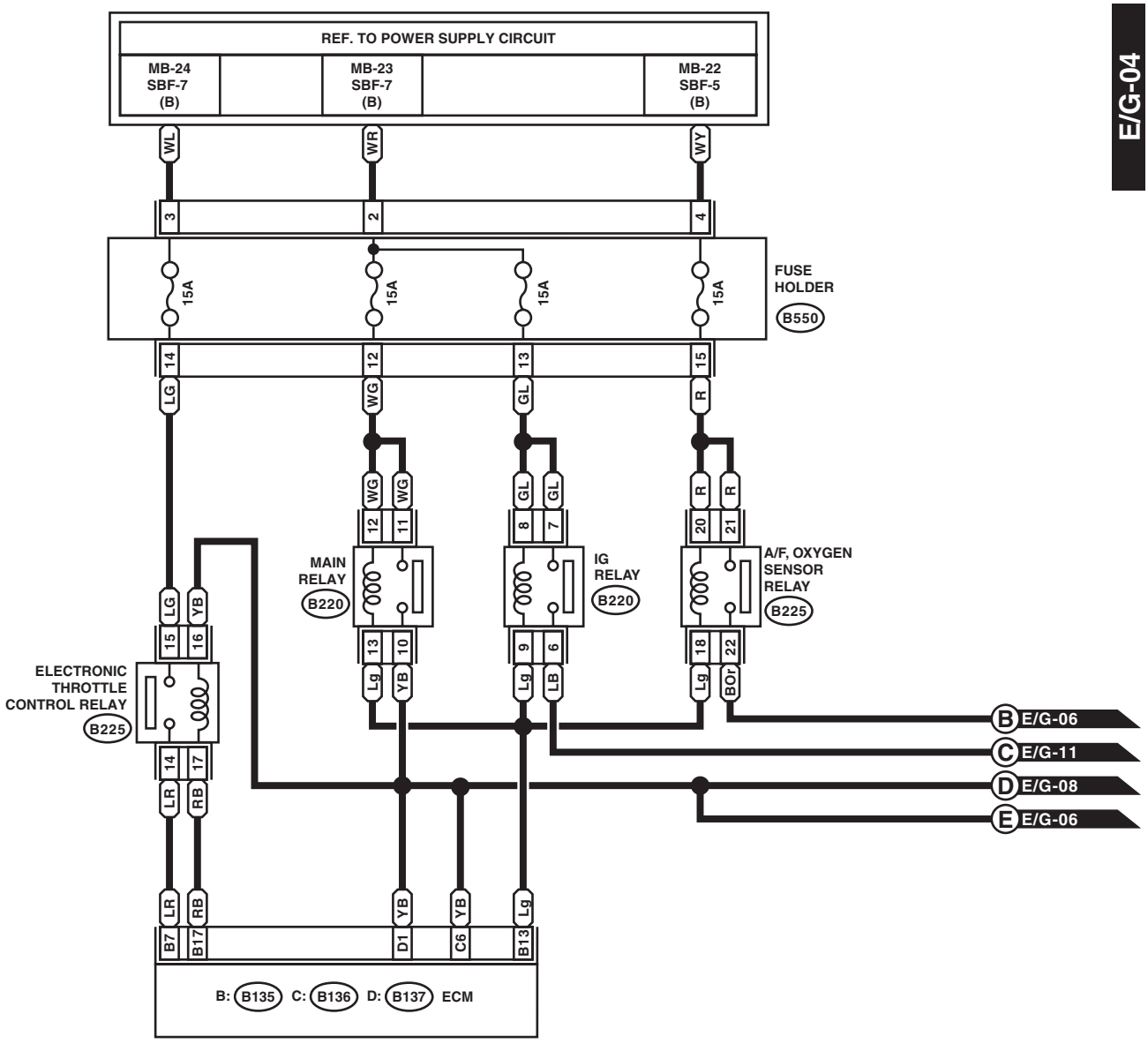

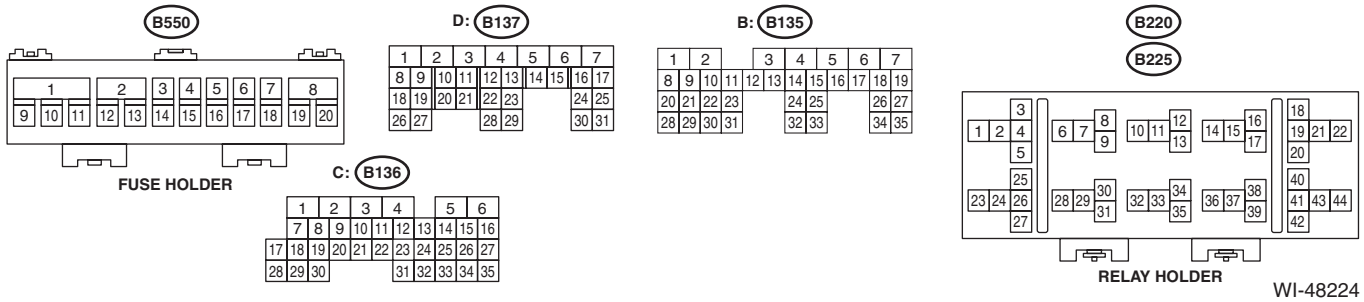

WI-48224

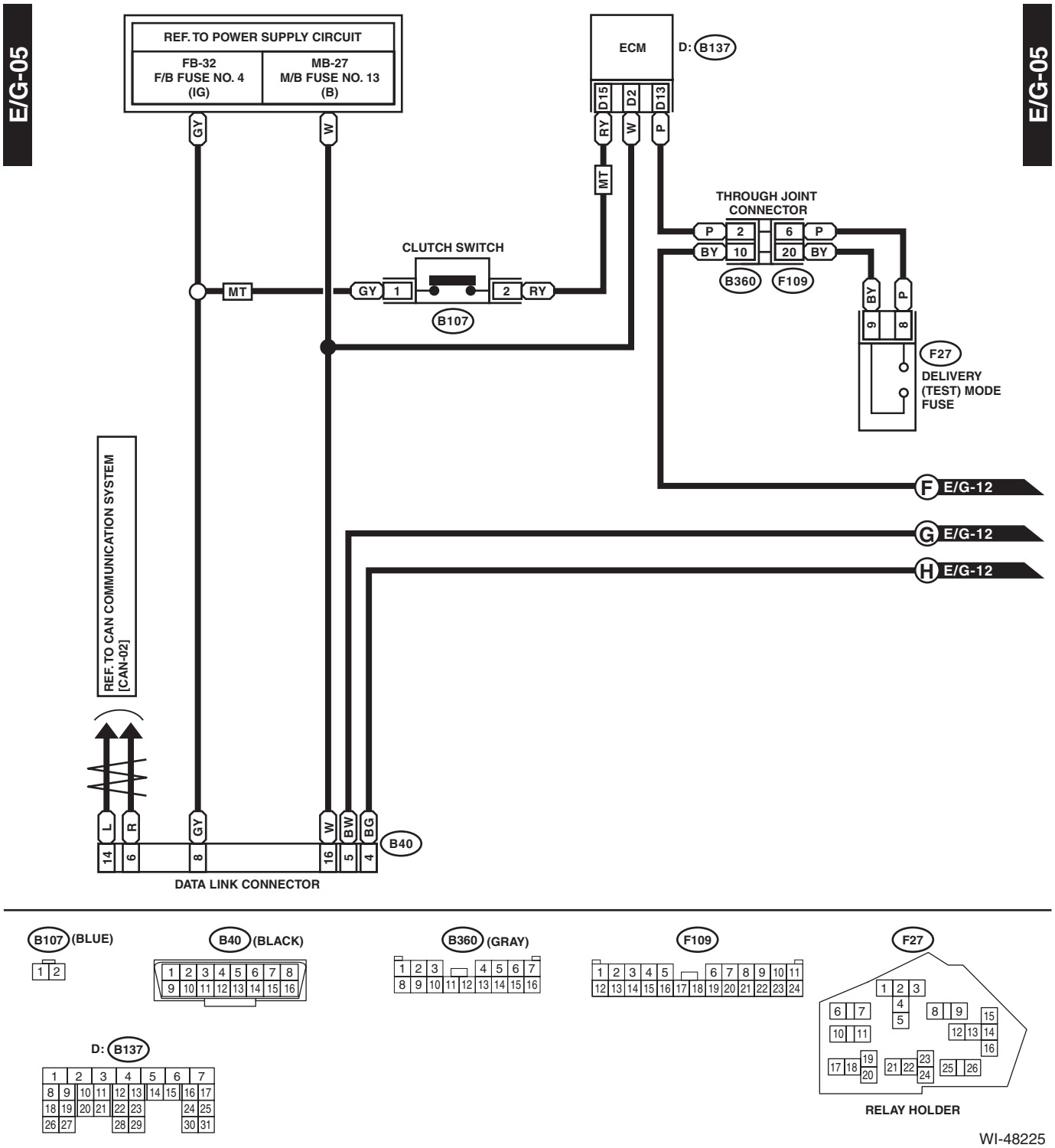
E/G-05
E/G-05
REF. TO POWER SUPPLY CIRCUIT
FB-32
F/B FUSE NO. 4
(IG)
MB-27
M/B FUSE NO. 13
(B)
ECM
D: B137
D15
D2
D13
RY
W
P
MT
THROUGH JOINT CONNECTOR
P 2 6 P
BY 10 20 BY
B360
F109
CLUTCH SWITCH
GY 1 2 RY
B107
MT
BY
P
9
8
F27
DELIVERY (TEST) MODE FUSE
F E/G-12
G E/G-12
H E/G-12
REF. TO CAN COMMUNICATION SYSTEM [CAN-02]
L
R
GY
W
BW
BG
B40
14
6
8
16
5
4
DATA LINK CONNECTOR

B107 (BLUE)
1 2
B40 (BLACK)
1 2 3 4 5 6 7 8
9 10 11 12 13 14 15 16
B360 (GRAY)
1 2 3 4 5 6 7
8 9 10 11 12 13 14 15 16
F109
1 2 3 4 5 6 7 8 9 10 11
12 13 14 15 16 17 18 19 20 21 22 23 24
F27
1 2 3 4 5 6 7 8 9 10 11 12 13 14 15 16 17 18 19 20 21 22 23 24 25 26
RELAY HOLDER
D: B137
1 2 3 4 5 6 7
8 9 10 11 12 13 14 15 16 17
18 19 20 21 22 23 24 25
26 27 28 29 30 31

WI-48225

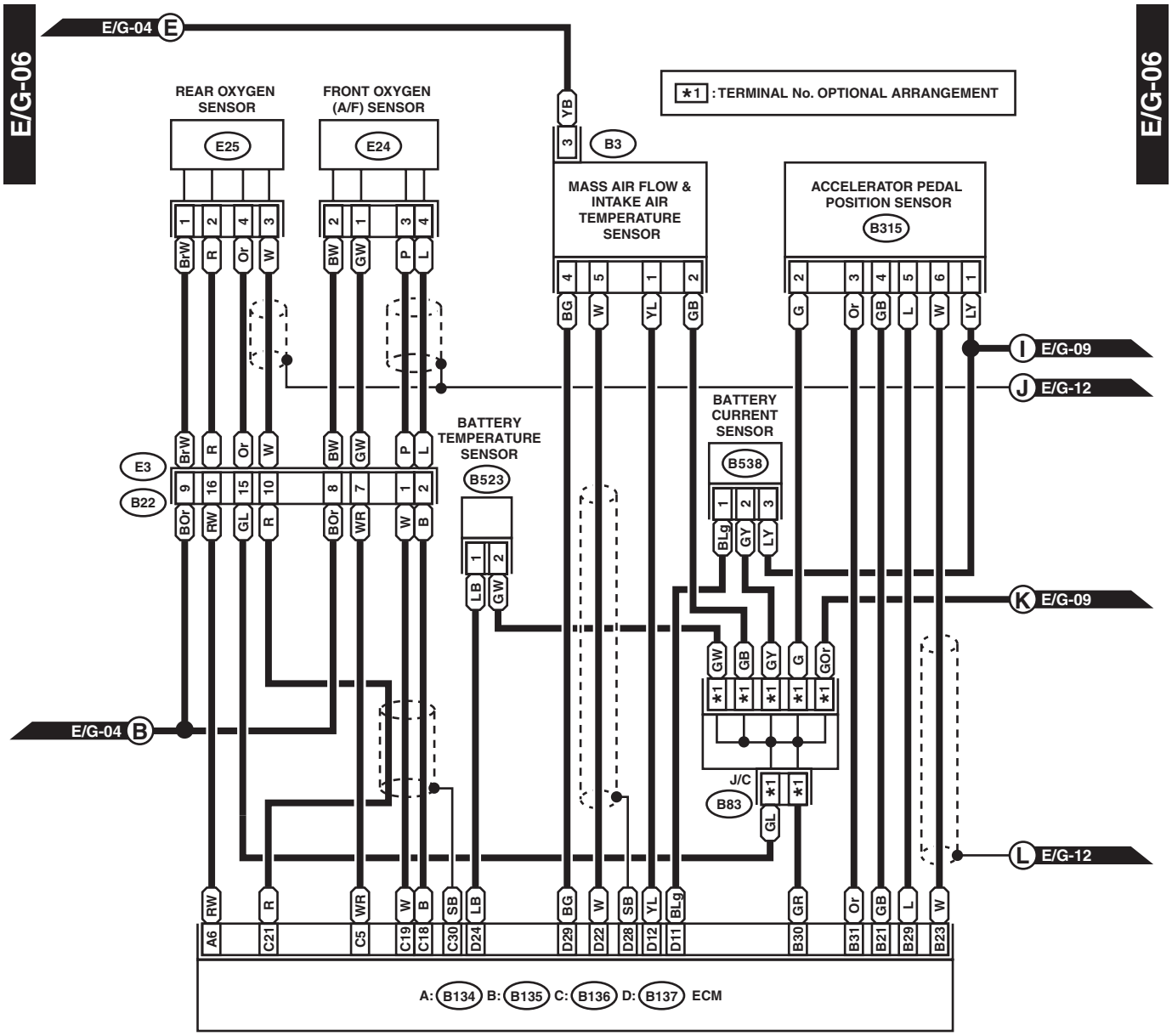
E/G-06
E/G-04 E
REAR OXYGEN SENSOR
FRONT OXYGEN (A/F) SENSOR
*1 : TERMINAL No. OPTIONAL ARRANGEMENT
E25
E24
B3
MASS AIR FLOW & INTAKE AIR TEMPERATURE SENSOR
ACCELERATOR PEDAL POSITION SENSOR
B315
BATTERY TEMPERATURE SENSOR
B523
BATTERY CURRENT SENSOR
B538
E3
B22
I E/G-09
J E/G-12
K E/G-09
L E/G-12
E/G-04 B
J/C
B83
A: B134 B: B135 C: B136 D: B137 ECM

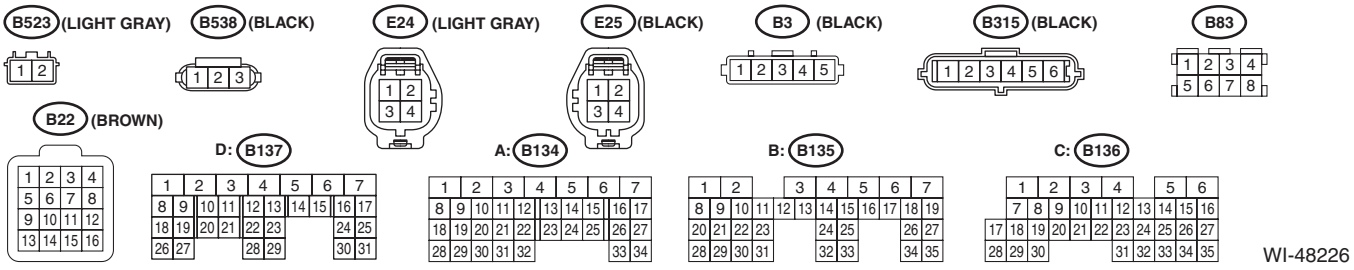
B523 (LIGHT GRAY)
B538 (BLACK)
E24 (LIGHT GRAY)
E25 (BLACK)
B3 (BLACK)
B315 (BLACK)
B83
B22 (BROWN)
D: B137
A: B134
B: B135
C: B136
WI-48226

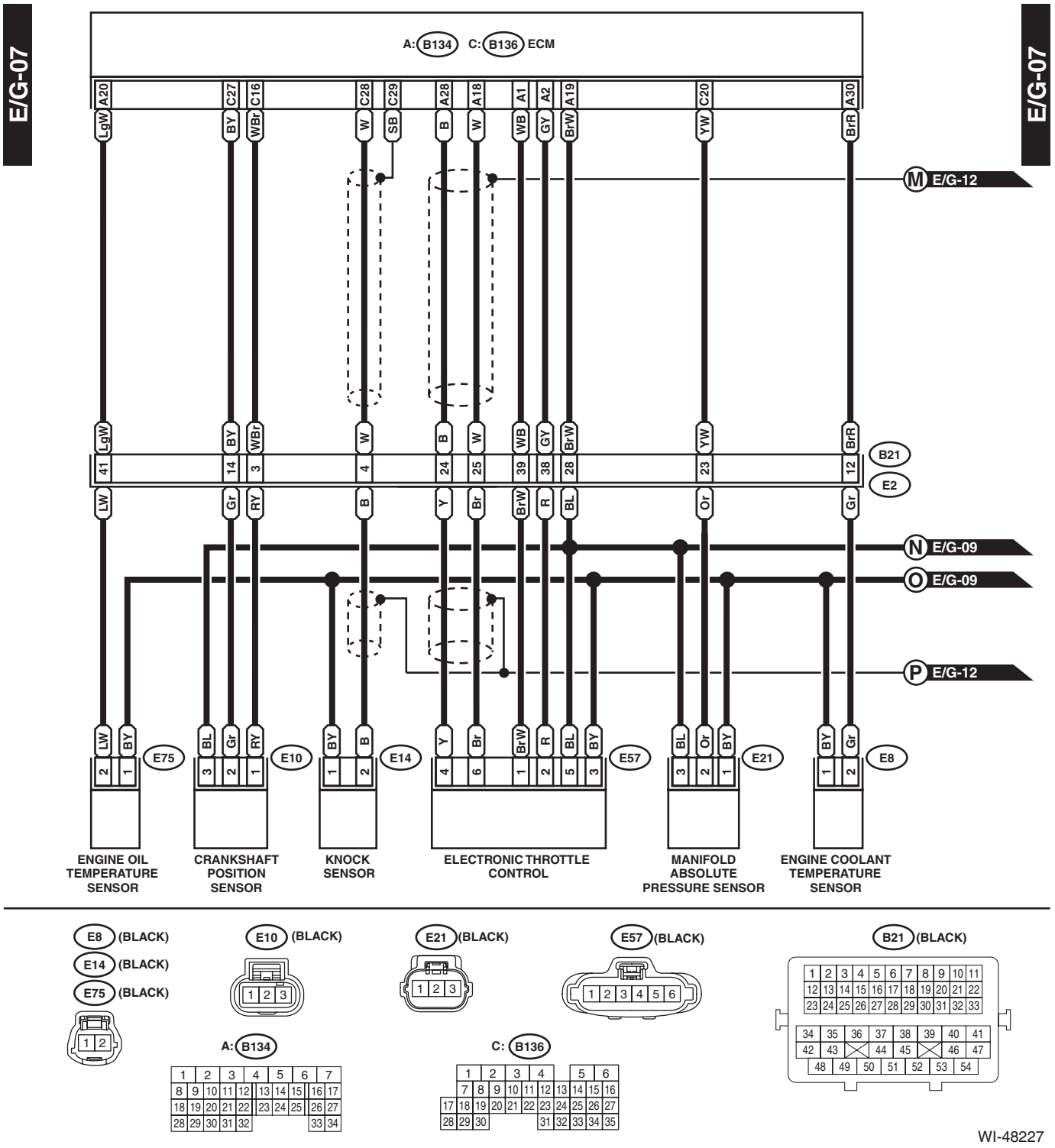
E/G-07
E/G-07
A: B134 C: B136 ECM
A20 C27 C16 C28 C29 A28 A18 A1 A2 A19 C20 A30
LgW BY WBr W SB B W WB GY BrW YW BrR
M E/G-12
41 14 3 4 24 25 39 38 28 23 12
B21
E2
LW Gr RY B Y Br BrW R BL Or Gr
N E/G-09
O E/G-09
P E/G-12
LW BY E75
BL Gr RY E10
BY B E14
Y Br BrW R BL BY E57
BL Or BY E21
BY Gr E8
ENGINE OIL TEMPERATURE SENSOR
CRANKSHAFT POSITION SENSOR
KNOCK SENSOR
ELECTRONIC THROTTLE CONTROL
MANIFOLD ABSOLUTE PRESSURE SENSOR
ENGINE COOLANT TEMPERATURE SENSOR
E8 (BLACK)
E14 (BLACK)
E75 (BLACK)
E10 (BLACK)
E21 (BLACK)
E57 (BLACK)
B21 (BLACK)
A: B134
C: B136

WI-48227

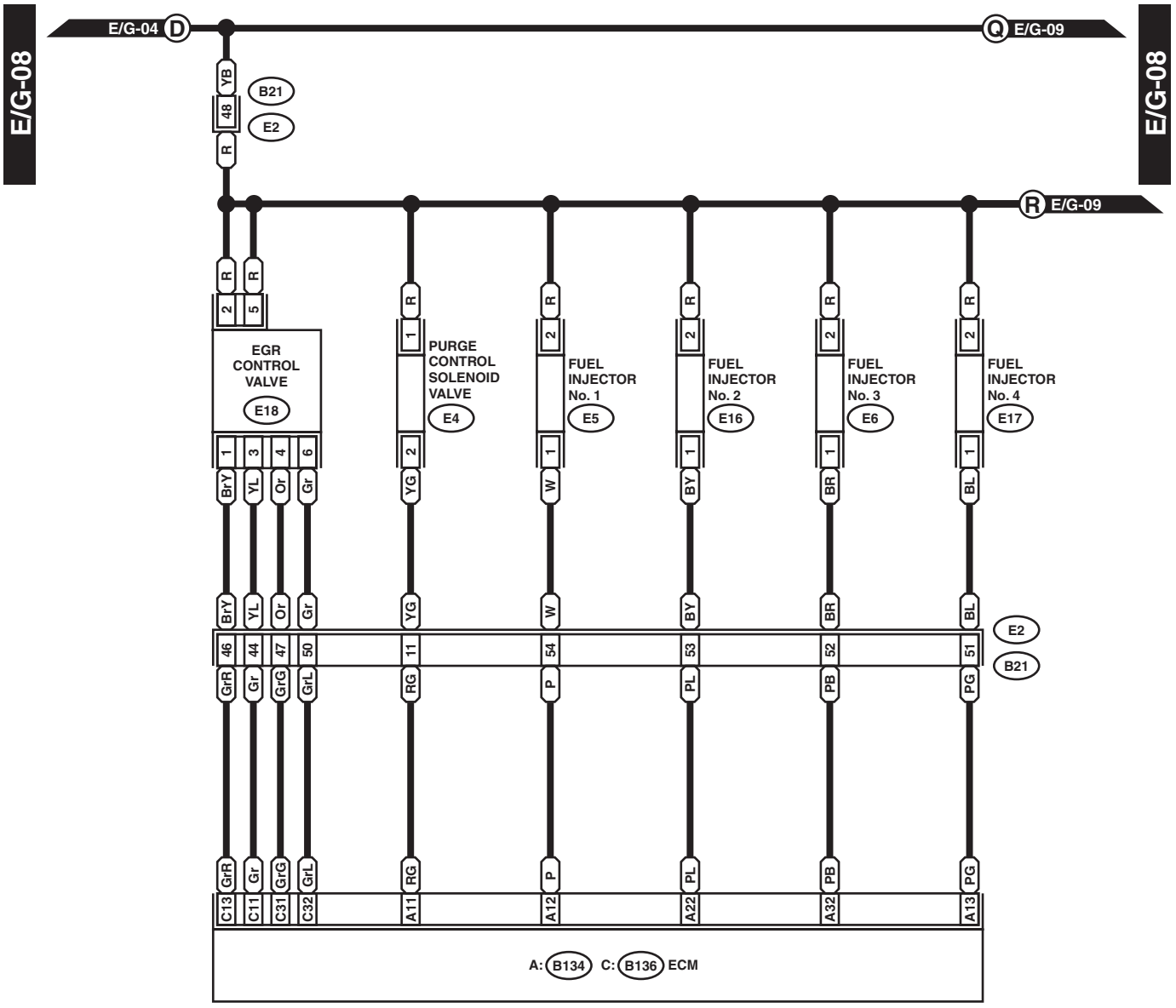
E/G-08
E/G-04 D
Q E/G-09
E/G-08
YB
48
B21
E2
R
R E/G-09
R
2
5
EGR CONTROL VALVE
E18
1
3
4
6
BrY
YL
Or
Gr
R
1
PURGE CONTROL SOLENOID VALVE
E4
2
YG
R
2
FUEL INJECTOR No. 1
E5
1
W
R
2
FUEL INJECTOR No. 2
E16
1
BY
R
2
FUEL INJECTOR No. 3
E6
1
BR
R
2
FUEL INJECTOR No. 4
E17
1
BL
BrY
YL
Or
Gr
YG
W
BY
BR
BL
E2
B21
46
44
47
50
11
54
53
52
51
GrR
Gr
GrG
GrL
RG
P
PL
PB
PG
GrR
Gr
GrG
GrL
RG
P
PL
PB
PG
C13
C11
C31
C32
A11
A12
A22
A32
A13
A: B134 C: B136 ECM

E4 (BLUE)
1 2

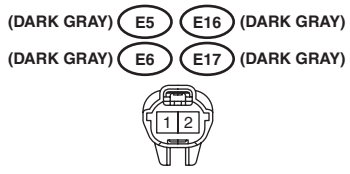
(DARK GRAY) E5
E16 (DARK GRAY)
(DARK GRAY) E6
E17 (DARK GRAY)
1 2

E18 (DARK GRAY)
1 2 3
4 5 6

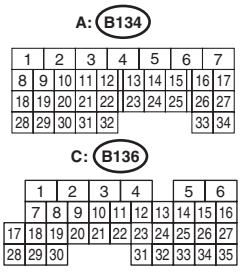
A: B134
1 2 3 4 5 6 7
8 9 10 11 12 13 14 15 16 17
18 19 20 21 22 23 24 25 26 27
28 29 30 31 32 33 34
C: B136
1 2 3 4 5 6
7 8 9 10 11 12 13 14 15 16
17 18 19 20 21 22 23 24 25 26 27
28 29 30 31 32 33 34 35

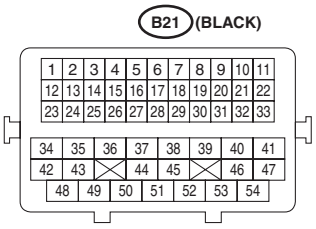
B21 (BLACK)
1 2 3 4 5 6 7 8 9 10 11
12 13 14 15 16 17 18 19 20 21 22
23 24 25 26 27 28 29 30 31 32 33
34 35 36 37 38 39 40 41
42 43 44 45 46 47
48 49 50 51 52 53 54

WI-48228

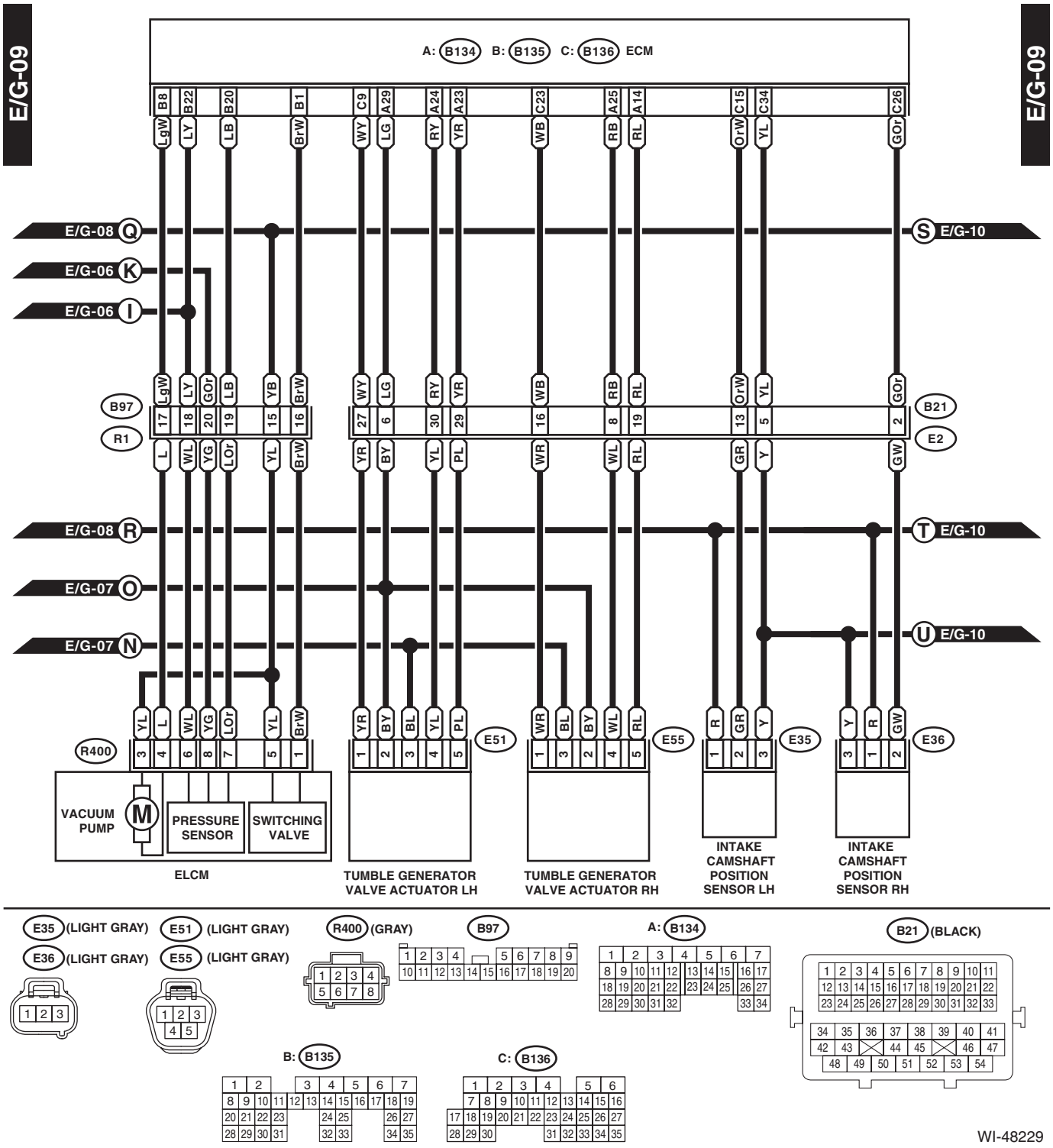
E/G-09
E/G-09
A: B134 B: B135 C: B136 ECM
B8 B22 B20 B1 C9 A29 A24 A23 C23 A25 A14 C15 C34 C26
LgW LY LB BrW WY LG RY YR WB RB RL OrW YL GOr
E/G-08 Q
E/G-06 K
E/G-06 I
S E/G-10
B97
R1
B21
E2
T E/G-10
E/G-08 R
E/G-07 O
E/G-07 N
U E/G-10
R400
E51
E55
E35
E36
VACUUM PUMP
M
PRESSURE SENSOR
SWITCHING VALVE
ELCM
TUMBLE GENERATOR VALVE ACTUATOR LH
TUMBLE GENERATOR VALVE ACTUATOR RH
INTAKE CAMSHAFT POSITION SENSOR LH
INTAKE CAMSHAFT POSITION SENSOR RH
E35 (LIGHT GRAY)
E36 (LIGHT GRAY)
E51 (LIGHT GRAY)
E55 (LIGHT GRAY)
R400 (GRAY)
B97
A: B134
B21 (BLACK)
B: B135
C: B136
WI-48229

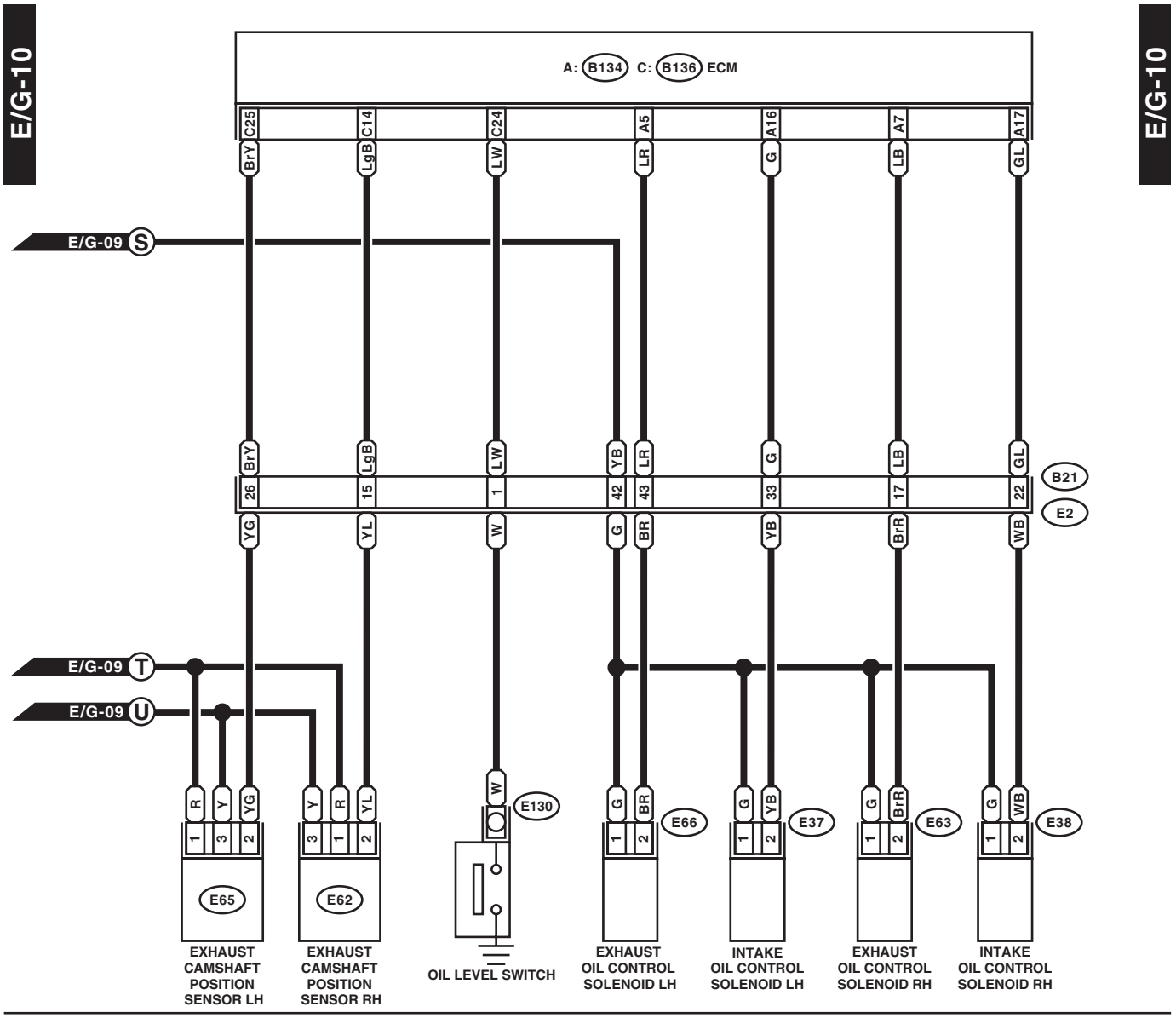
E/G-10
E/G-10
A: B134 C: B136 ECM
C25
C14
C24
A5
A16
A7
A17
BrY
LgB
LW
LR
G
LB
GL
E/G-09 S
BrY
LgB
LW
YB
LR
G
LB
GL
26
15
1
42
43
33
17
22
B21
E2
YG
YL
W
G
BR
YB
BrR
WB
E/G-09 T
E/G-09 U
R
Y
YG
Y
R
YL
W
G
BR
G
YB
G
BrR
G
WB
1
3
2
3
1
2
E130
1
2
E66
1
2
E37
1
2
E63
1
2
E38
E65
E62
EXHAUST CAMSHAFT POSITION SENSOR LH
EXHAUST CAMSHAFT POSITION SENSOR RH
OIL LEVEL SWITCH
EXHAUST OIL CONTROL SOLENOID LH
INTAKE OIL CONTROL SOLENOID LH
EXHAUST OIL CONTROL SOLENOID RH
INTAKE OIL CONTROL SOLENOID RH

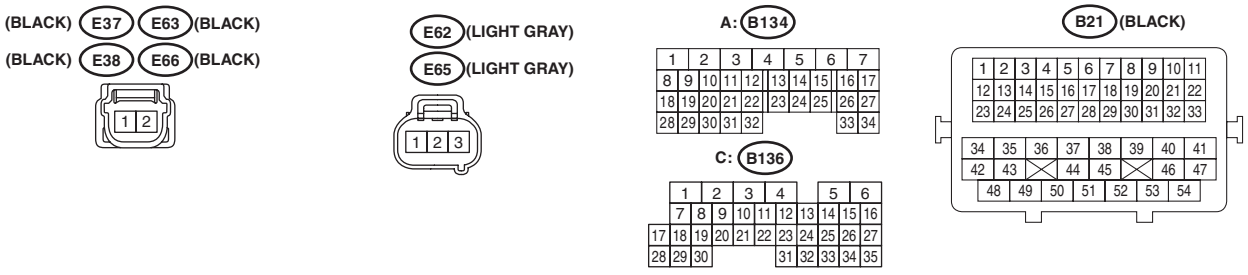
(BLACK) E37 E63 (BLACK)
(BLACK) E38 E66 (BLACK)
1 2
E62 (LIGHT GRAY)
E65 (LIGHT GRAY)
1 2 3
A: B134
1 2 3 4 5 6 7
8 9 10 11 12 13 14 15 16 17
18 19 20 21 22 23 24 25 26 27
28 29 30 31 32 33 34
C: B136
1 2 3 4 5 6
7 8 9 10 11 12 13 14 15 16
17 18 19 20 21 22 23 24 25 26 27
28 29 30 31 32 33 34 35
B21 (BLACK)
1 2 3 4 5 6 7 8 9 10 11
12 13 14 15 16 17 18 19 20 21 22
23 24 25 26 27 28 29 30 31 32 33
34 35 36 37 38 39 40 41
42 43 44 45 46 47
48 49 50 51 52 53 54

WI-48230

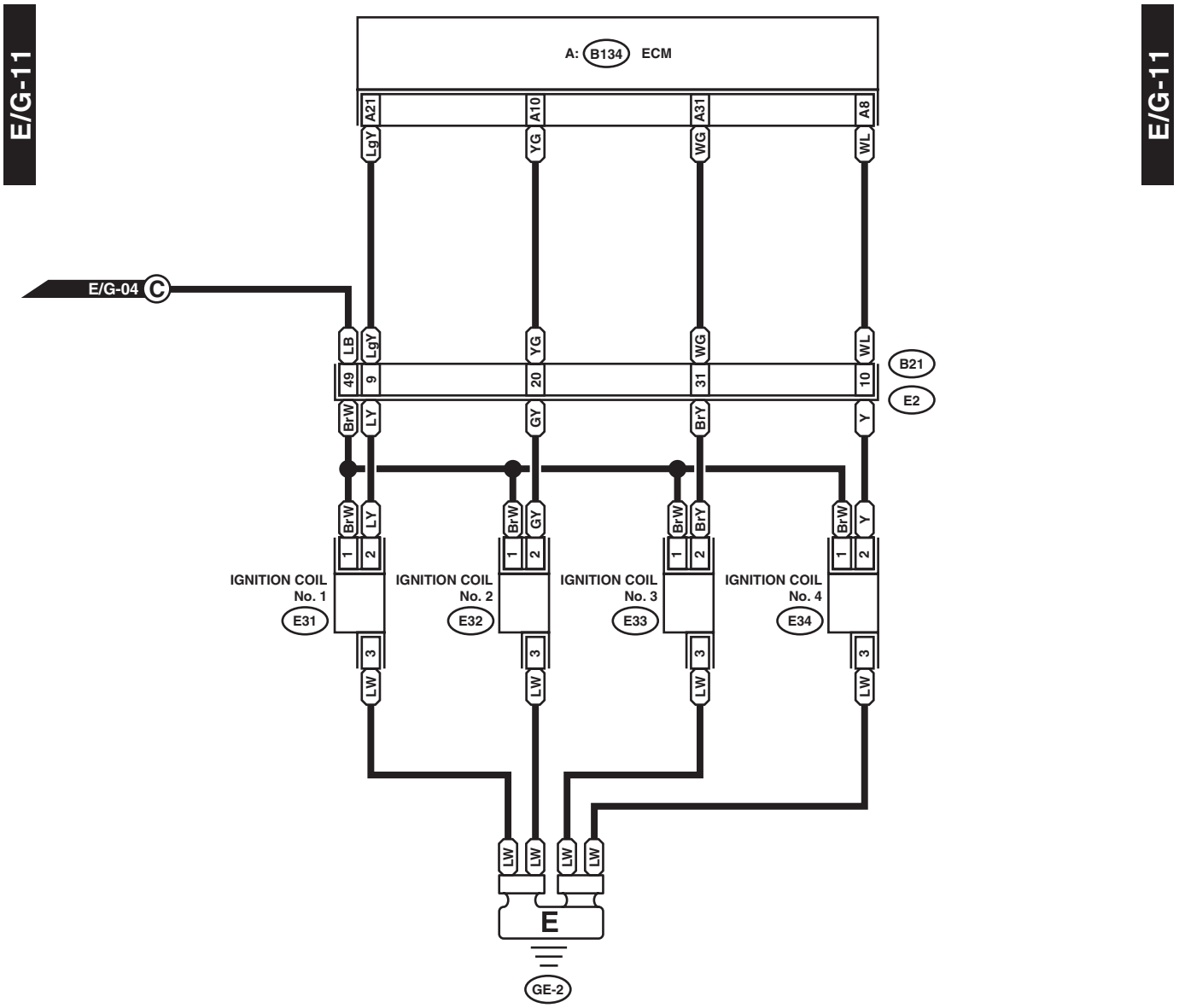
E/G-11
E/G-11
A: B134 ECM
A21
A10
A31
A8
LgY
YG
WG
WL
E/G-04 C
LB
LgY
YG
WG
WL
49
9
20
31
10
B21
E2
BrW
LY
GY
BrY
Y
1
2
IGNITION COIL No. 1
E31
IGNITION COIL No. 2
E32
IGNITION COIL No. 3
E33
IGNITION COIL No. 4
E34
3
LW
E
GE-2

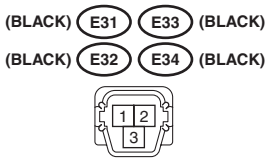
(BLACK) E31 E33 (BLACK)
(BLACK) E32 E34 (BLACK)
1 2
3

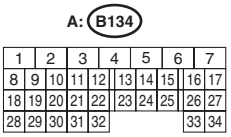
A: B134
1 2 3 4 5 6 7
8 9 10 11 12 13 14 15 16 17
18 19 20 21 22 23 24 25 26 27
28 29 30 31 32 33 34

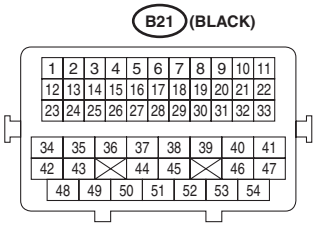
B21 (BLACK)
1 2 3 4 5 6 7 8 9 10 11
12 13 14 15 16 17 18 19 20 21 22
23 24 25 26 27 28 29 30 31 32 33
34 35 36 37 38 39 40 41
42 43 44 45 46 47
48 49 50 51 52 53 54

WI-48231

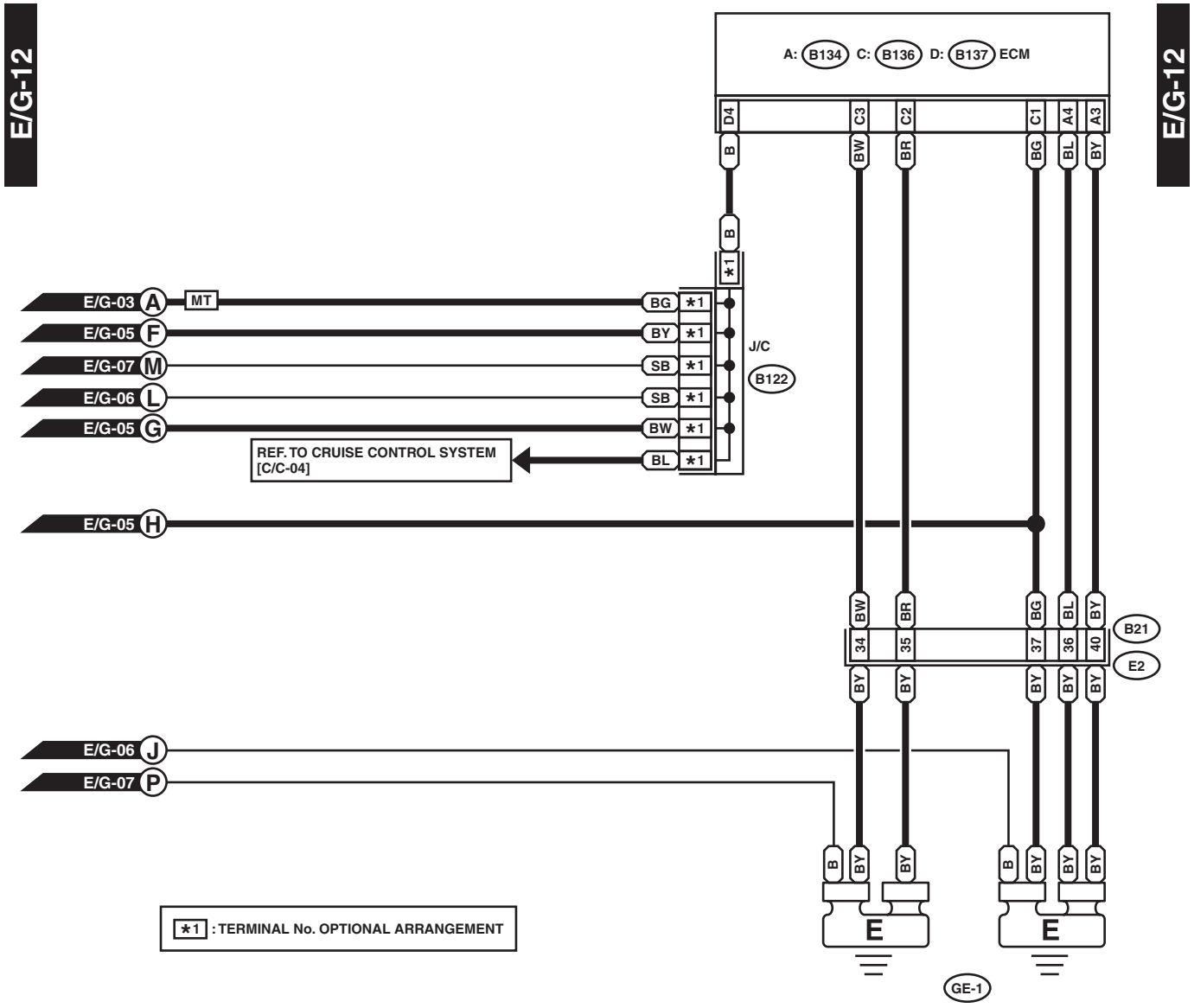
E/G-12
E/G-12
A: B134 C: B136 D: B137 ECM
D4
C3
C2
C1
A4
A3
B
BW
BR
BG
BL
BY
*1
E/G-03 A
MT
E/G-05 F
E/G-07 M
E/G-06 L
E/G-05 G
J/C
B122
REF. TO CRUISE CONTROL SYSTEM [C/C-04]
E/G-05 H
B21
E2
34
35
37
36
40
E/G-06 J
E/G-07 P
E
GE-1
*1 : TERMINAL No. OPTIONAL ARRANGEMENT

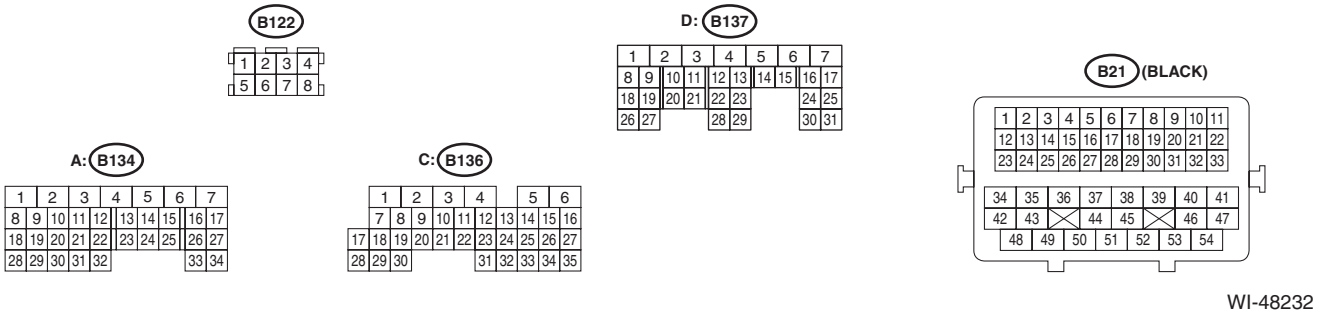
B122
D: B137
A: B134
C: B136
B21 (BLACK)

WI-48232

2. WITH PUSH BUTTON START

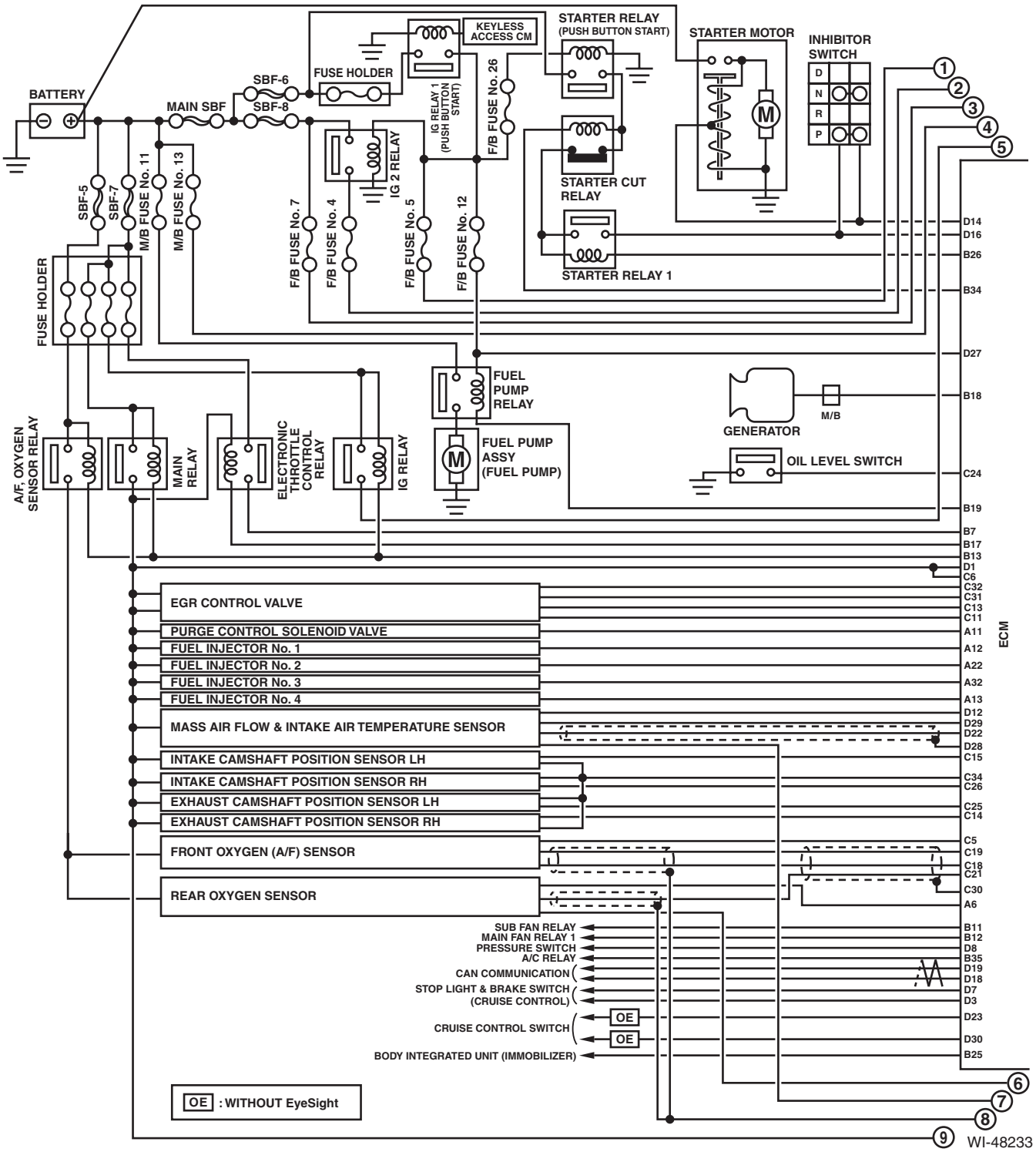

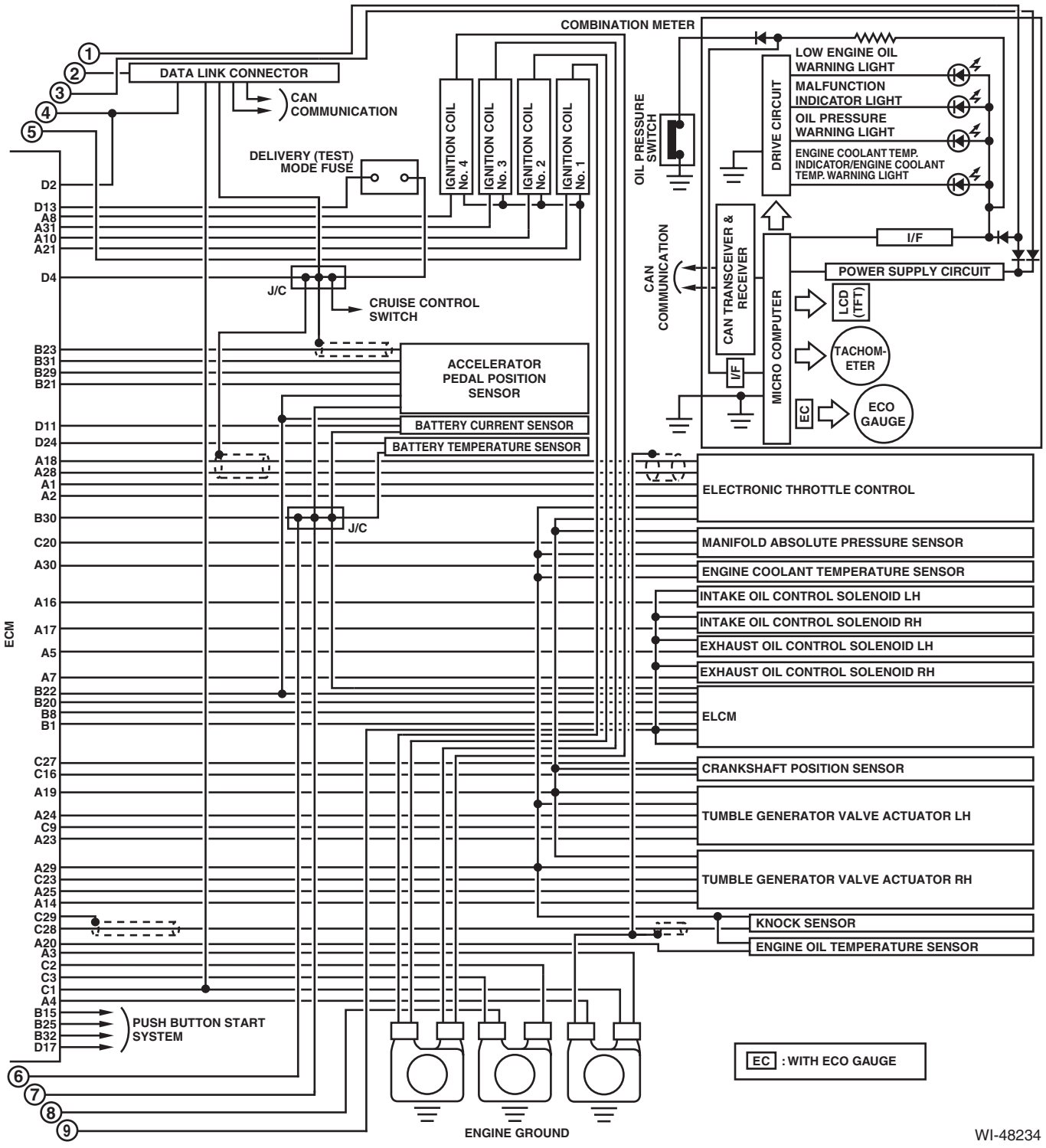
COMBINATION METER
DATA LINK CONNECTOR
CAN COMMUNICATION
DELIVERY (TEST) MODE FUSE
IGNITION COIL No. 4
IGNITION COIL No. 3
IGNITION COIL No. 2
IGNITION COIL No. 1
OIL PRESSURE SWITCH
DRIVE CIRCUIT
LOW ENGINE OIL WARNING LIGHT
MALFUNCTION INDICATOR LIGHT
OIL PRESSURE WARNING LIGHT
ENGINE COOLANT TEMP. INDICATOR/ENGINE COOLANT TEMP. WARNING LIGHT
CAN COMMUNICATION
CAN TRANSCEIVER & RECEIVER
MICRO COMPUTER
I/F
POWER SUPPLY CIRCUIT
LCD (TFT)
TACHOM-ETER
EC
ECO GAUGE
J/C
CRUISE CONTROL SWITCH
ACCELERATOR PEDAL POSITION SENSOR
BATTERY CURRENT SENSOR
BATTERY TEMPERATURE SENSOR
ECM
D2
D13
A8
A31
A10
A21
D4
B23
B31
B29
B21
D11
D24
A18
A28
A1
A2
B30
C20
A30
A16
A17
A5
A7
B22
B20
B8
B1
C27
C16
A19
A24
C9
A23
A29
C23
A25
A14
C29
C28
A20
A3
C2
C3
C1
A4
B15
B25
B32
D17
PUSH BUTTON START SYSTEM
ELECTRONIC THROTTLE CONTROL
MANIFOLD ABSOLUTE PRESSURE SENSOR
ENGINE COOLANT TEMPERATURE SENSOR
INTAKE OIL CONTROL SOLENOID LH
INTAKE OIL CONTROL SOLENOID RH
EXHAUST OIL CONTROL SOLENOID LH
EXHAUST OIL CONTROL SOLENOID RH
ELCM
CRANKSHAFT POSITION SENSOR
TUMBLE GENERATOR VALVE ACTUATOR LH
TUMBLE GENERATOR VALVE ACTUATOR RH
KNOCK SENSOR
ENGINE OIL TEMPERATURE SENSOR
EC : WITH ECO GAUGE
ENGINE GROUND
WI-48234

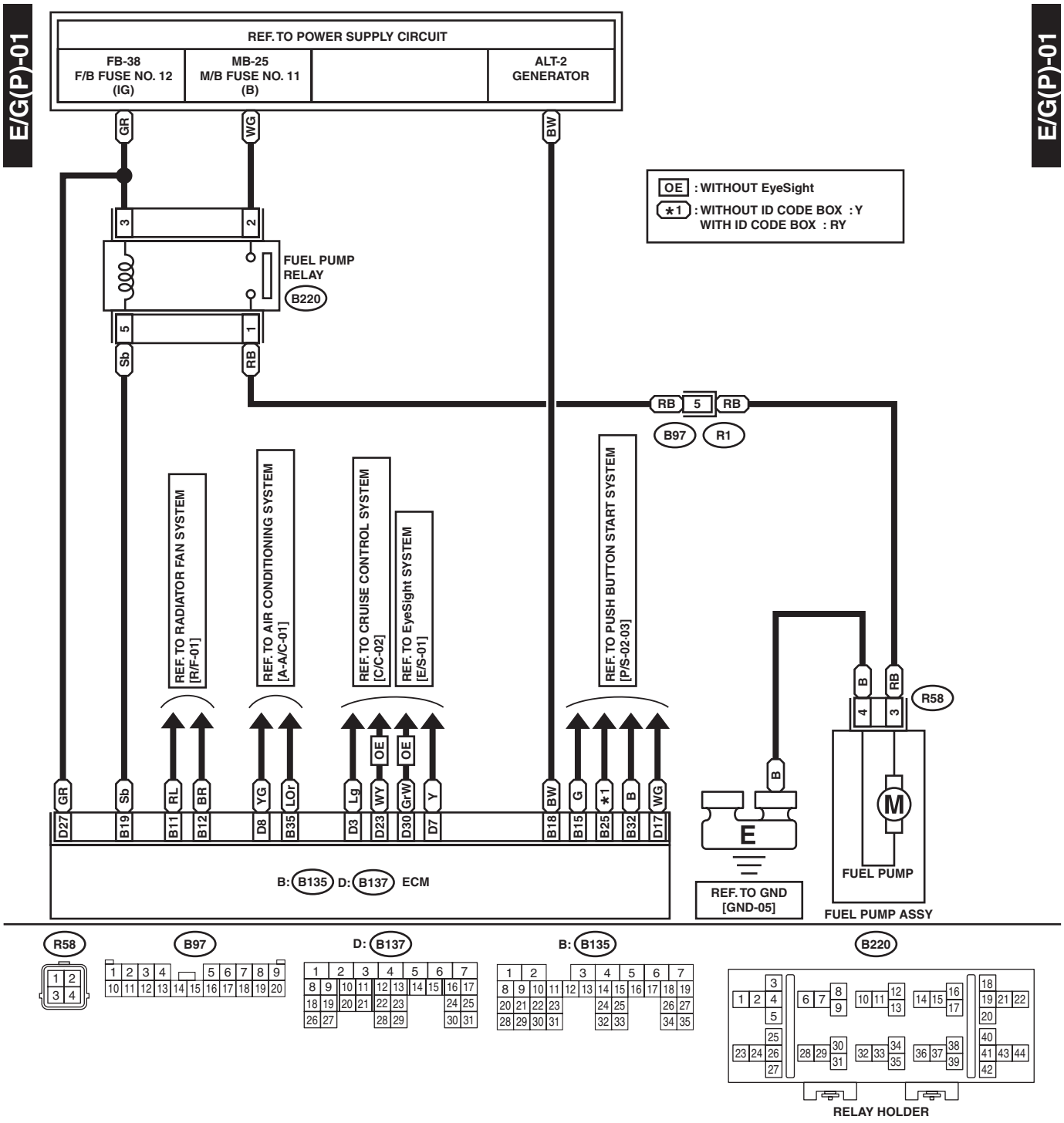
E/G(P)-01
REF. TO POWER SUPPLY CIRCUIT
FB-38
F/B FUSE NO. 12
(IG)
MB-25
M/B FUSE NO. 11
(B)
ALT-2
GENERATOR
OE : WITHOUT EyeSight
*1 : WITHOUT ID CODE BOX : Y
WITH ID CODE BOX : RY
FUEL PUMP
RELAY
B220
REF. TO RADIATOR FAN SYSTEM [R/F-01]
REF. TO AIR CONDITIONING SYSTEM [A-A/C-01]
REF. TO CRUISE CONTROL SYSTEM [C/C-02]
REF. TO EyeSight SYSTEM [E/S-01]
REF. TO PUSH BUTTON START SYSTEM [P/S-02-03]
B97
R1
R58
B: B135 D: B137 ECM
REF. TO GND [GND-05]
FUEL PUMP
FUEL PUMP ASSY
RELAY HOLDER
WI-48235

E/G(P)-02

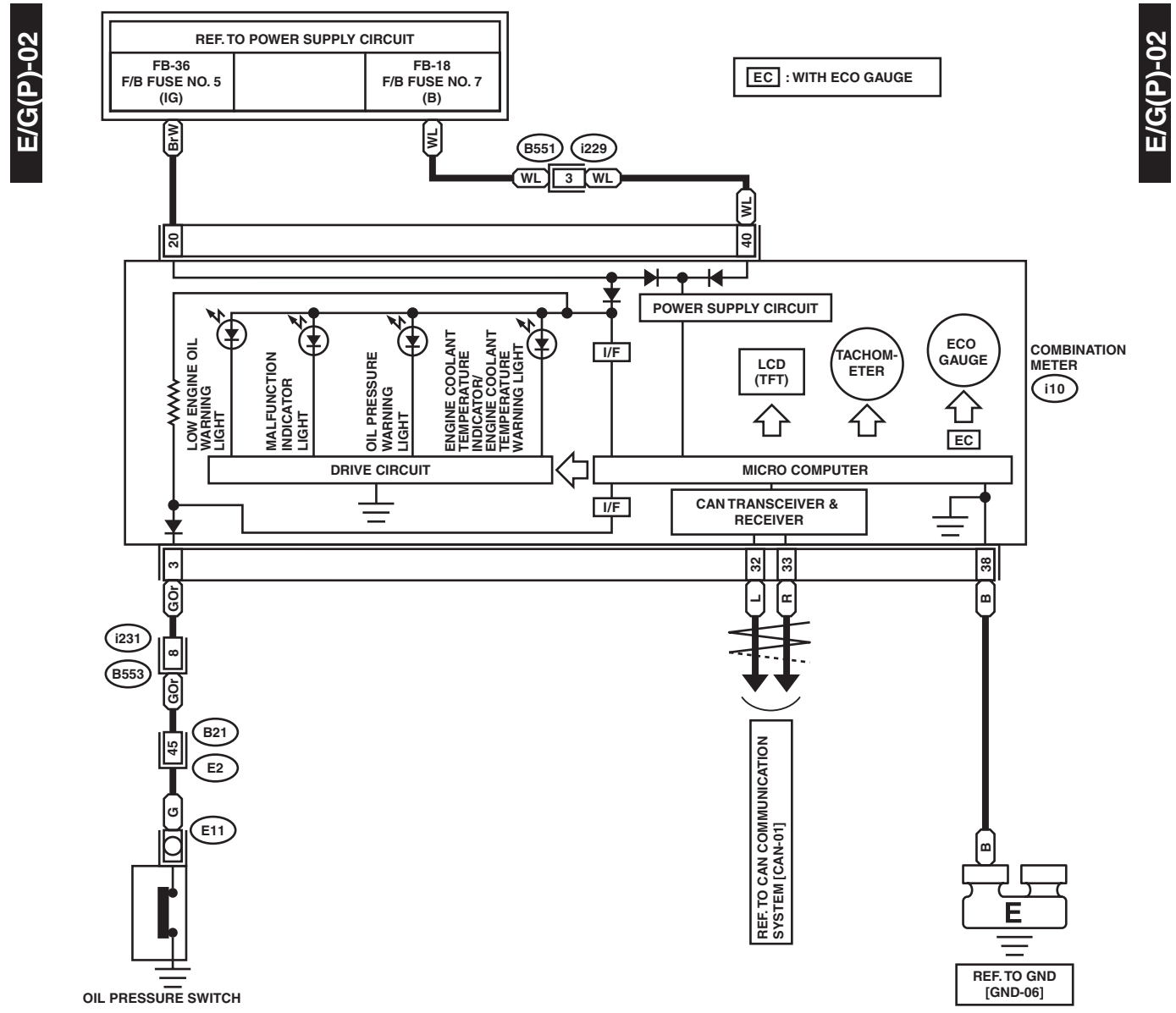

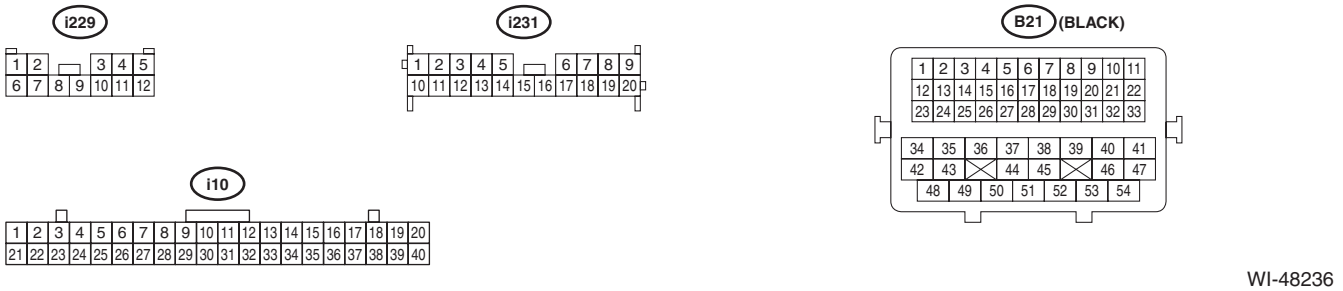

WI-48236

E/G(P)-03

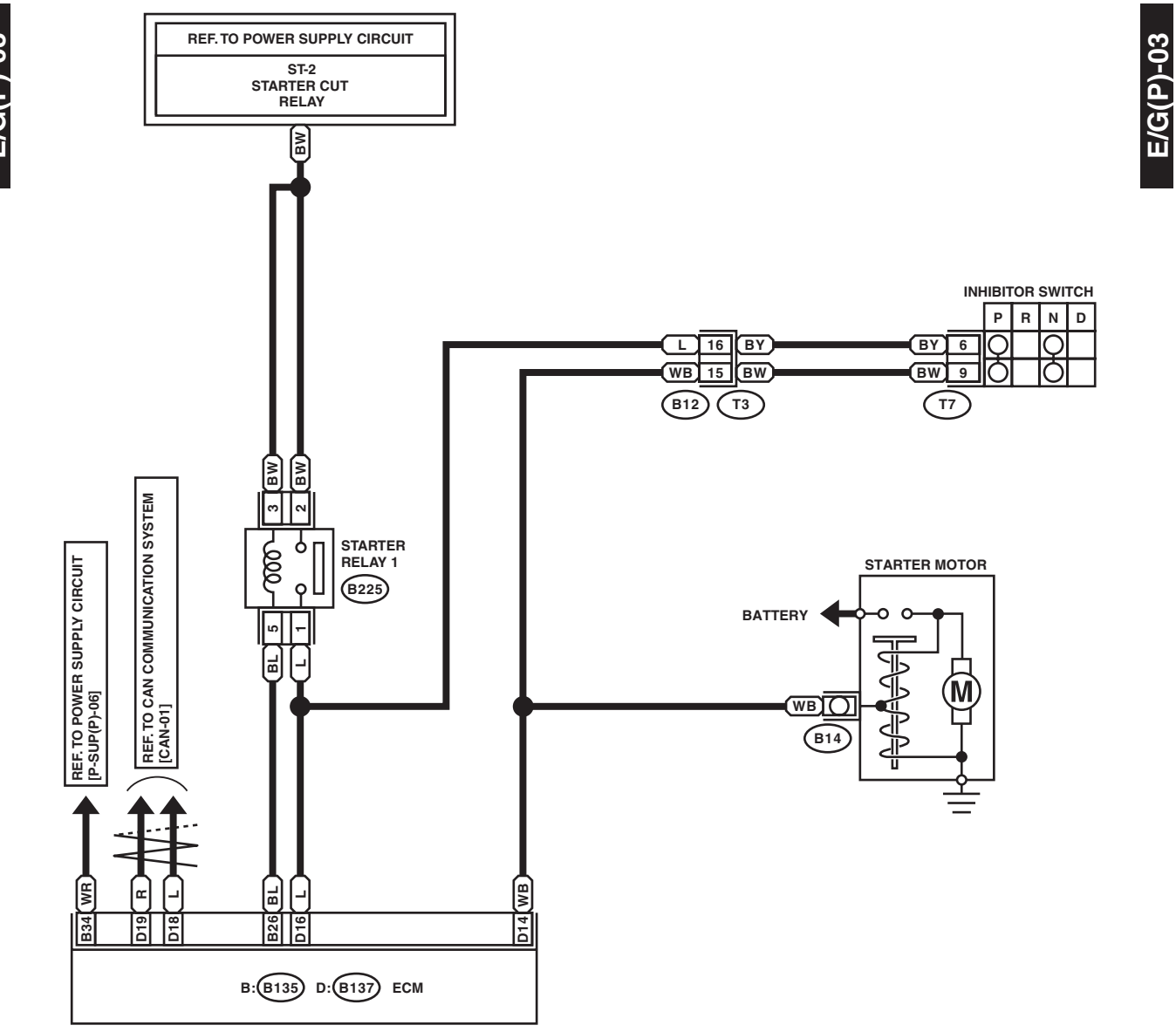

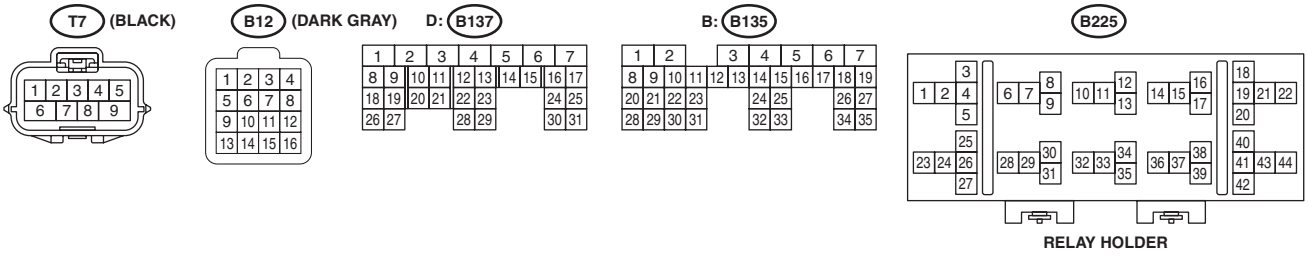

WI-48237

E/G(P)-04

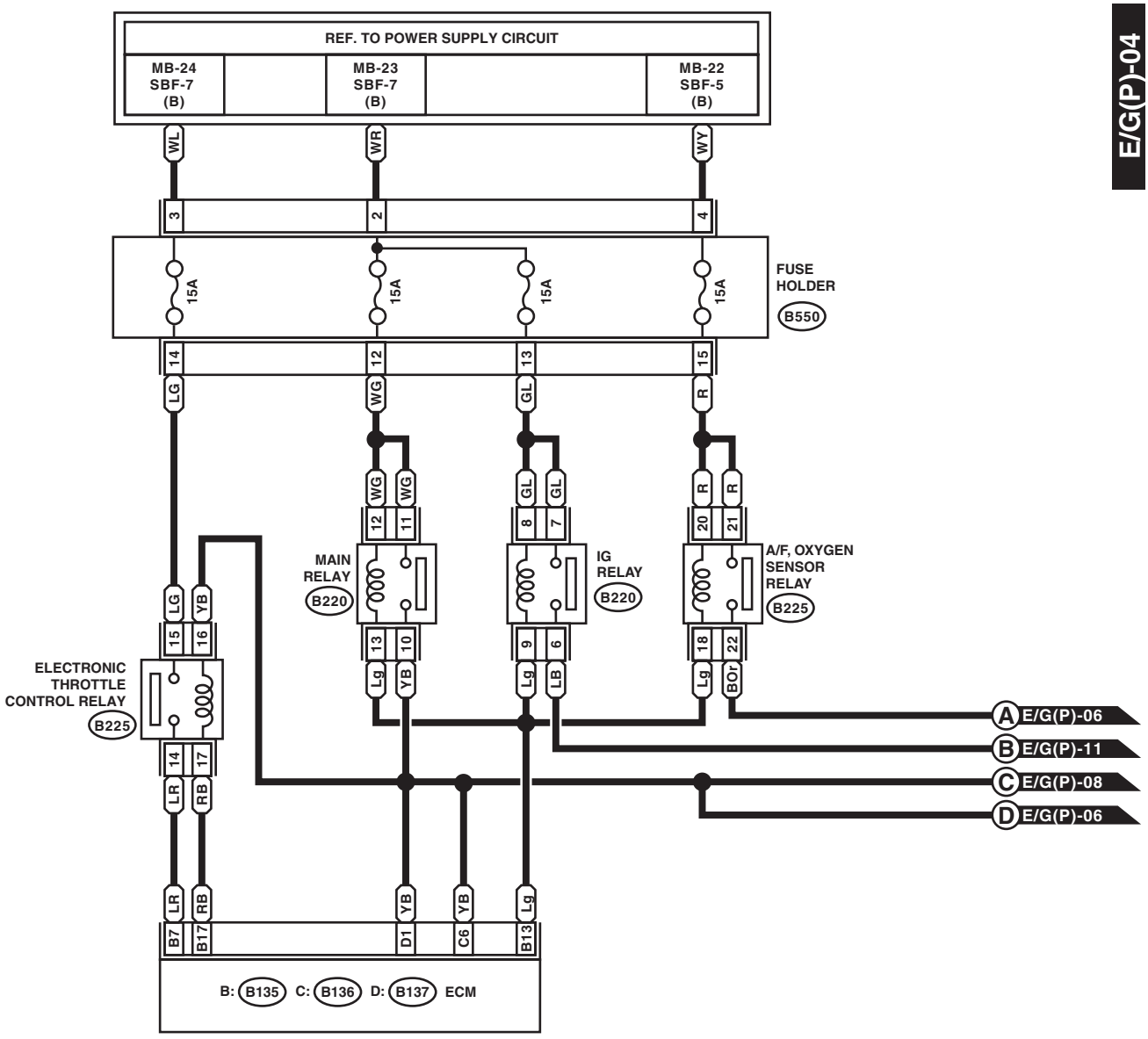

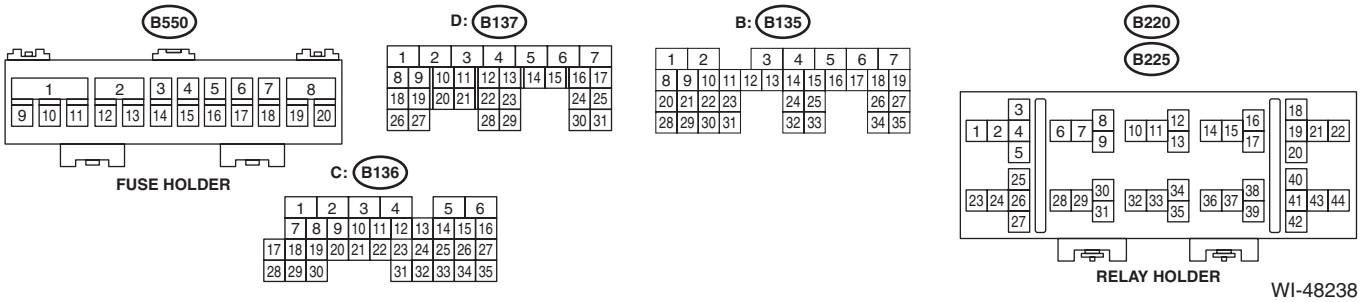

WI-48238

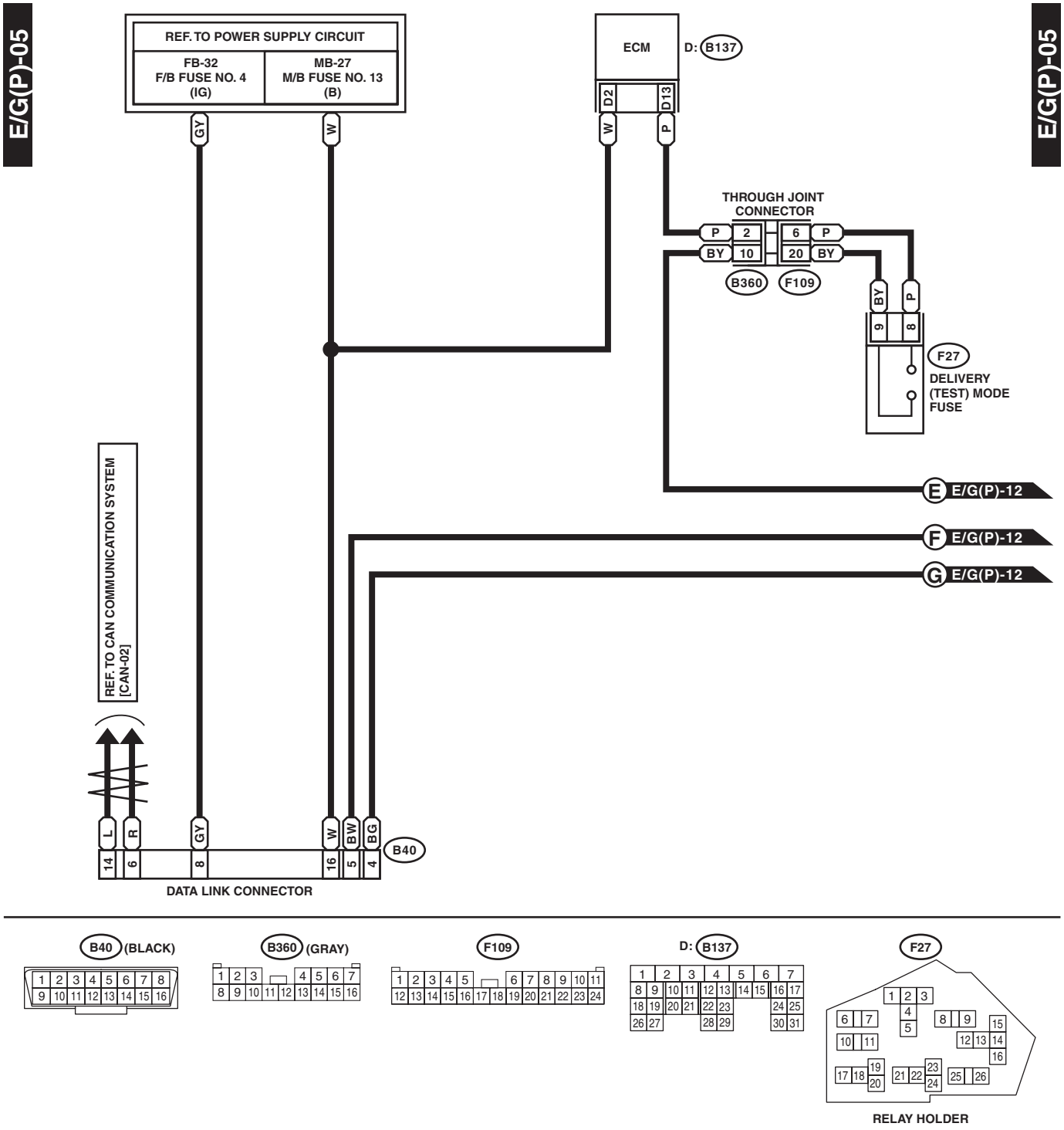
E/G(P)-05
E/G(P)-05
REF. TO POWER SUPPLY CIRCUIT
FB-32
F/B FUSE NO. 4
(IG)
MB-27
M/B FUSE NO. 13
(B)
ECM
D: B137
D2
D13
GY
W
W
P
THROUGH JOINT CONNECTOR
P 2 6 P
BY 10 20 BY
B360
F109
BY
P
9
8
F27
DELIVERY (TEST) MODE FUSE
E E/G(P)-12
F E/G(P)-12
G E/G(P)-12
REF. TO CAN COMMUNICATION SYSTEM [CAN-02]
L
R
GY
W
BW
BG
B40
14
6
8
16
5
4
DATA LINK CONNECTOR

B40 (BLACK)
B360 (GRAY)
F109
D: B137
F27
RELAY HOLDER

WI-48239

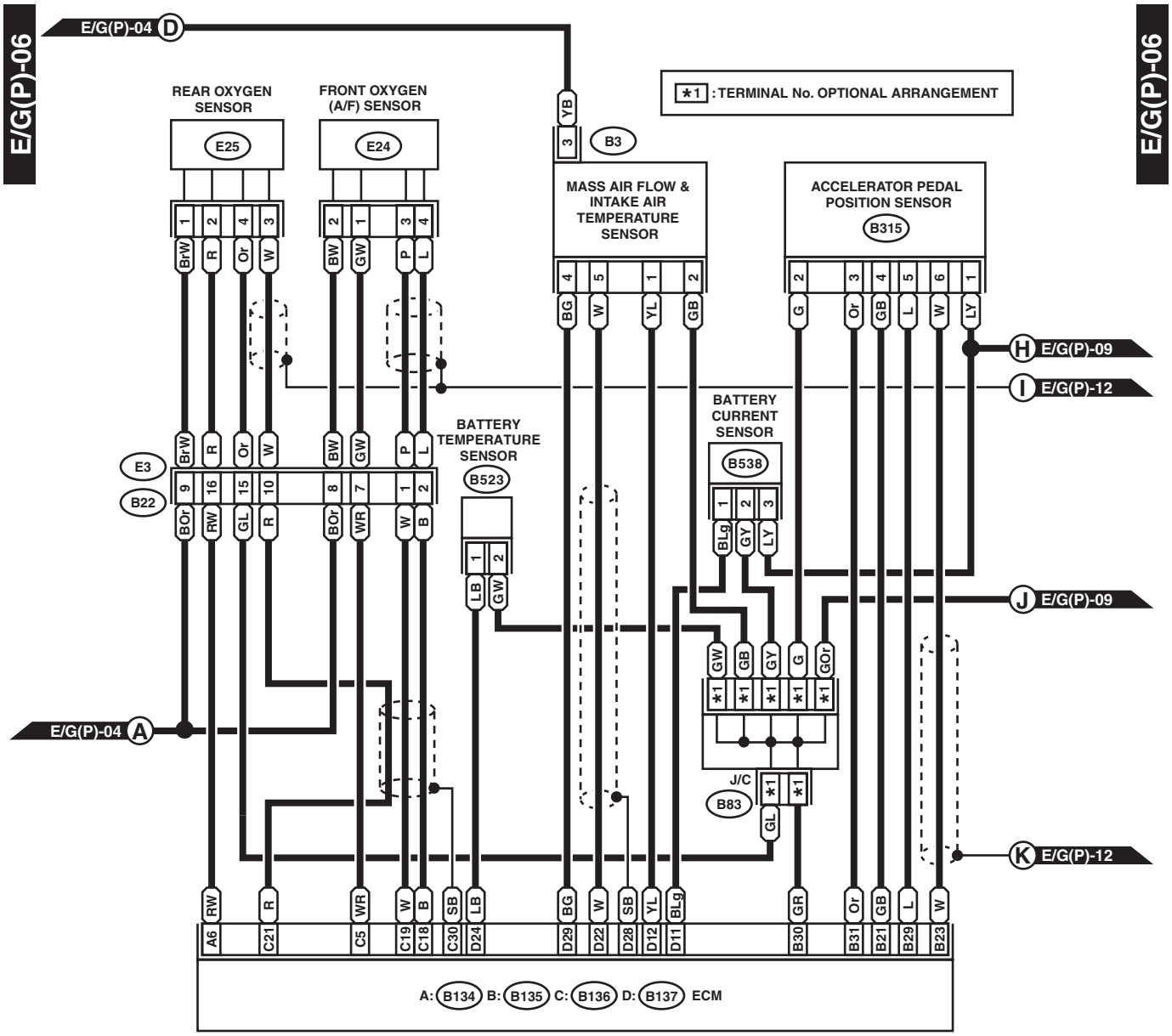
E/G(P)-06
E/G(P)-04 D
REAR OXYGEN SENSOR
FRONT OXYGEN (A/F) SENSOR
*1 : TERMINAL No. OPTIONAL ARRANGEMENT
E25
E24
B3
MASS AIR FLOW & INTAKE AIR TEMPERATURE SENSOR
ACCELERATOR PEDAL POSITION SENSOR
B315
BATTERY TEMPERATURE SENSOR
B523
BATTERY CURRENT SENSOR
B538
E3
B22
H E/G(P)-09
I E/G(P)-12
J E/G(P)-09
K E/G(P)-12
E/G(P)-04 A
J/C
B83
A: B134 B: B135 C: B136 D: B137 ECM

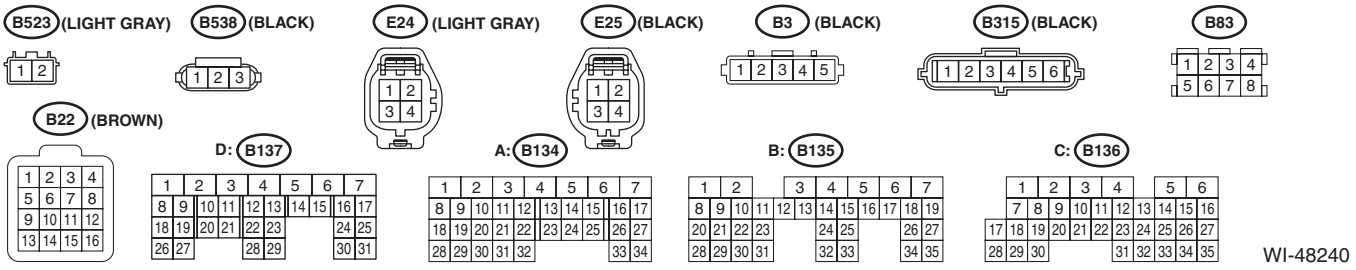
B523 (LIGHT GRAY)
B538 (BLACK)
E24 (LIGHT GRAY)
E25 (BLACK)
B3 (BLACK)
B315 (BLACK)
B83
B22 (BROWN)
D: B137
A: B134
B: B135
C: B136
WI-48240

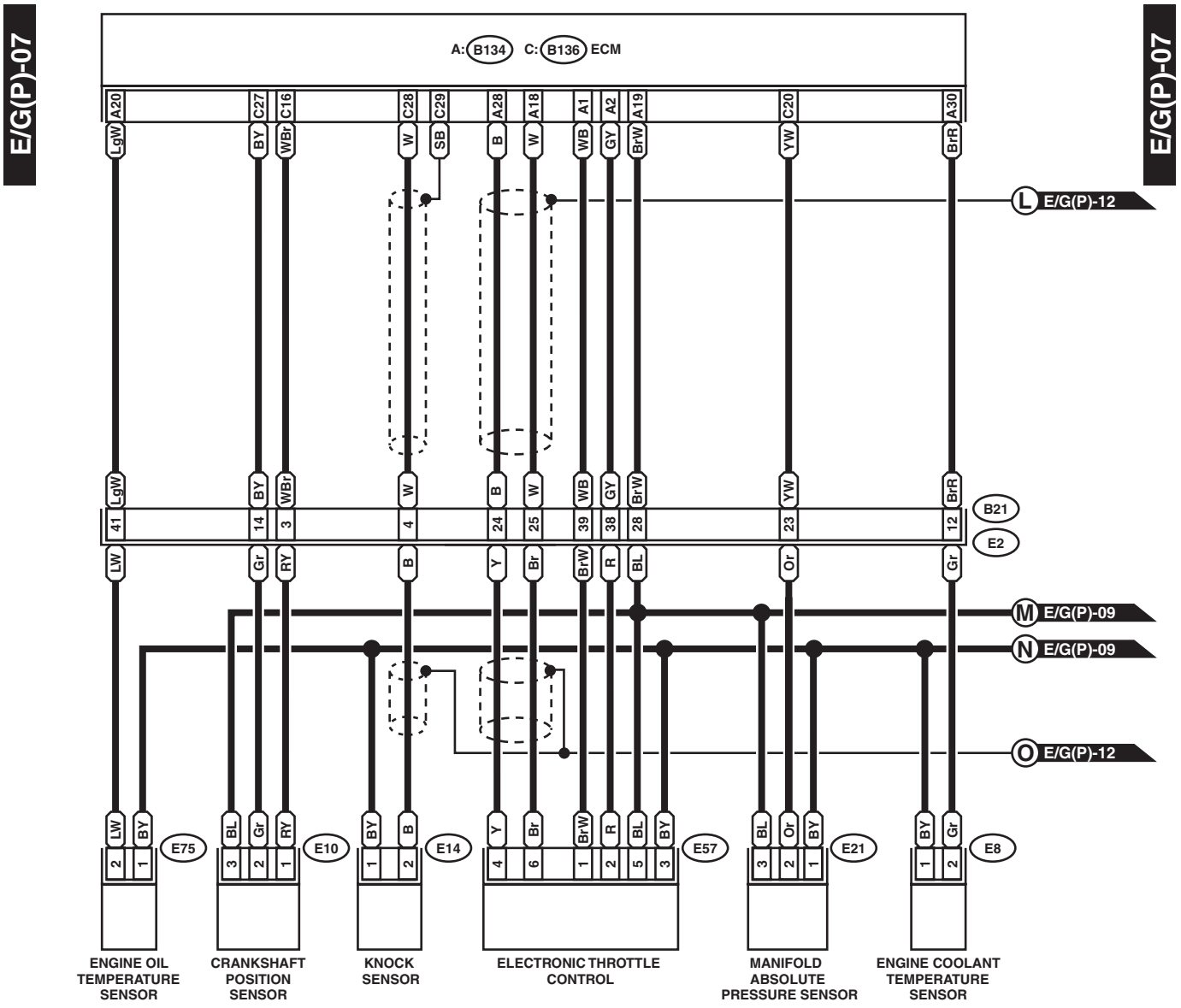
E/G(P)-07
E/G(P)-07
A: B134 C: B136 ECM
A20 C27 C16 C28 C29 A28 A18 A1 A2 A19 C20 A30
LgW BY WBr W SB B W WB GY BrW YW BrR
L E/G(P)-12
41 14 3 4 24 25 39 38 28 23 12
B21
E2
LW Gr RY B Y Br BrW R BL Or Gr
M E/G(P)-09
N E/G(P)-09
O E/G(P)-12
LW BY E75
BL Gr RY E10
BY B E14
Y Br BrW R BL BY E57
BL Or BY E21
BY Gr E8
ENGINE OIL TEMPERATURE SENSOR
CRANKSHAFT POSITION SENSOR
KNOCK SENSOR
ELECTRONIC THROTTLE CONTROL
MANIFOLD ABSOLUTE PRESSURE SENSOR
ENGINE COOLANT TEMPERATURE SENSOR

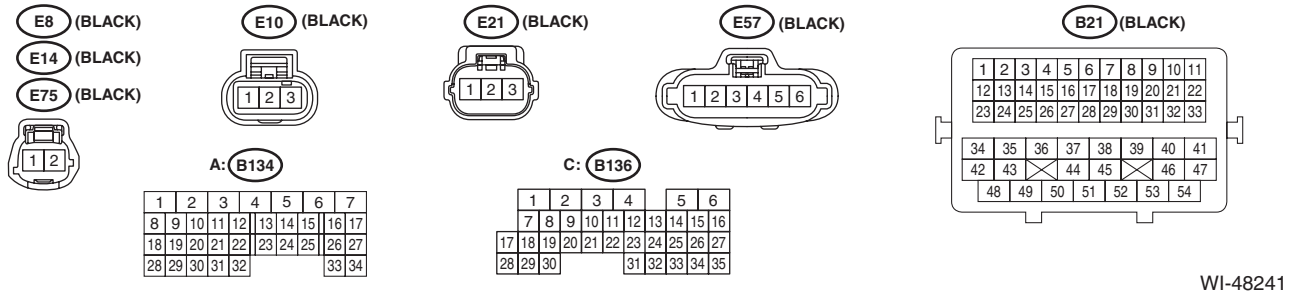
E8 (BLACK)
E14 (BLACK)
E75 (BLACK)
E10 (BLACK)
E21 (BLACK)
E57 (BLACK)
B21 (BLACK)
A: B134
C: B136

WI-48241

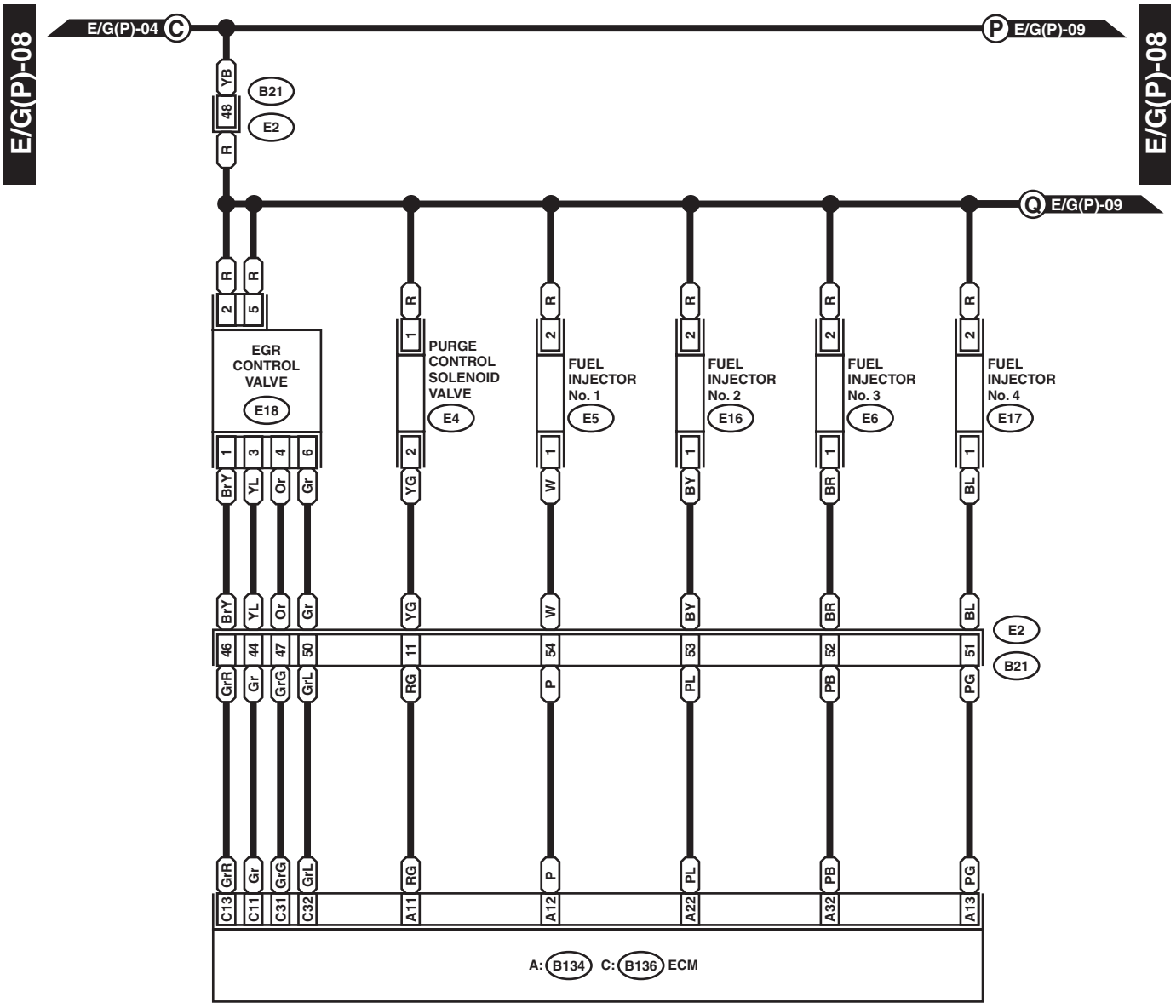
E/G(P)-08
E/G(P)-04 C
P E/G(P)-09
E/G(P)-08
B21
E2
Q E/G(P)-09
EGR CONTROL VALVE
E18
PURGE CONTROL SOLENOID VALVE
E4
FUEL INJECTOR No. 1
E5
FUEL INJECTOR No. 2
E16
FUEL INJECTOR No. 3
E6
FUEL INJECTOR No. 4
E17
E2
B21
A: B134 C: B136 ECM

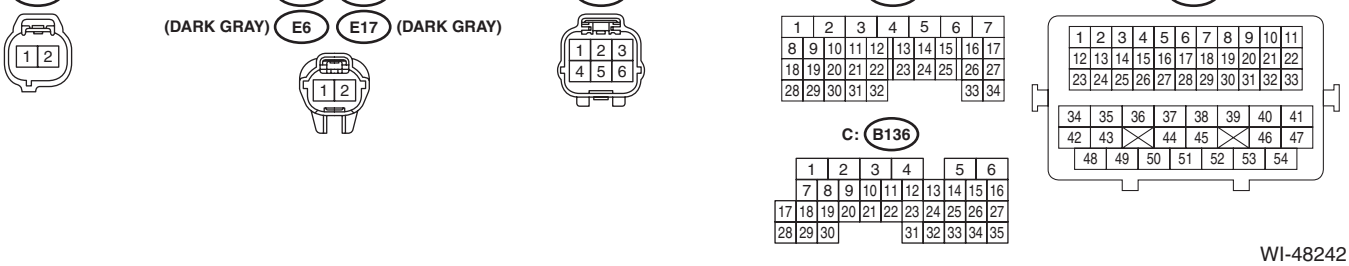
E4 (BLUE)
(DARK GRAY) E5 E16 (DARK GRAY)
(DARK GRAY) E6 E17 (DARK GRAY)
E18 (DARK GRAY)
A: B134
C: B136
B21 (BLACK)

WI-48242

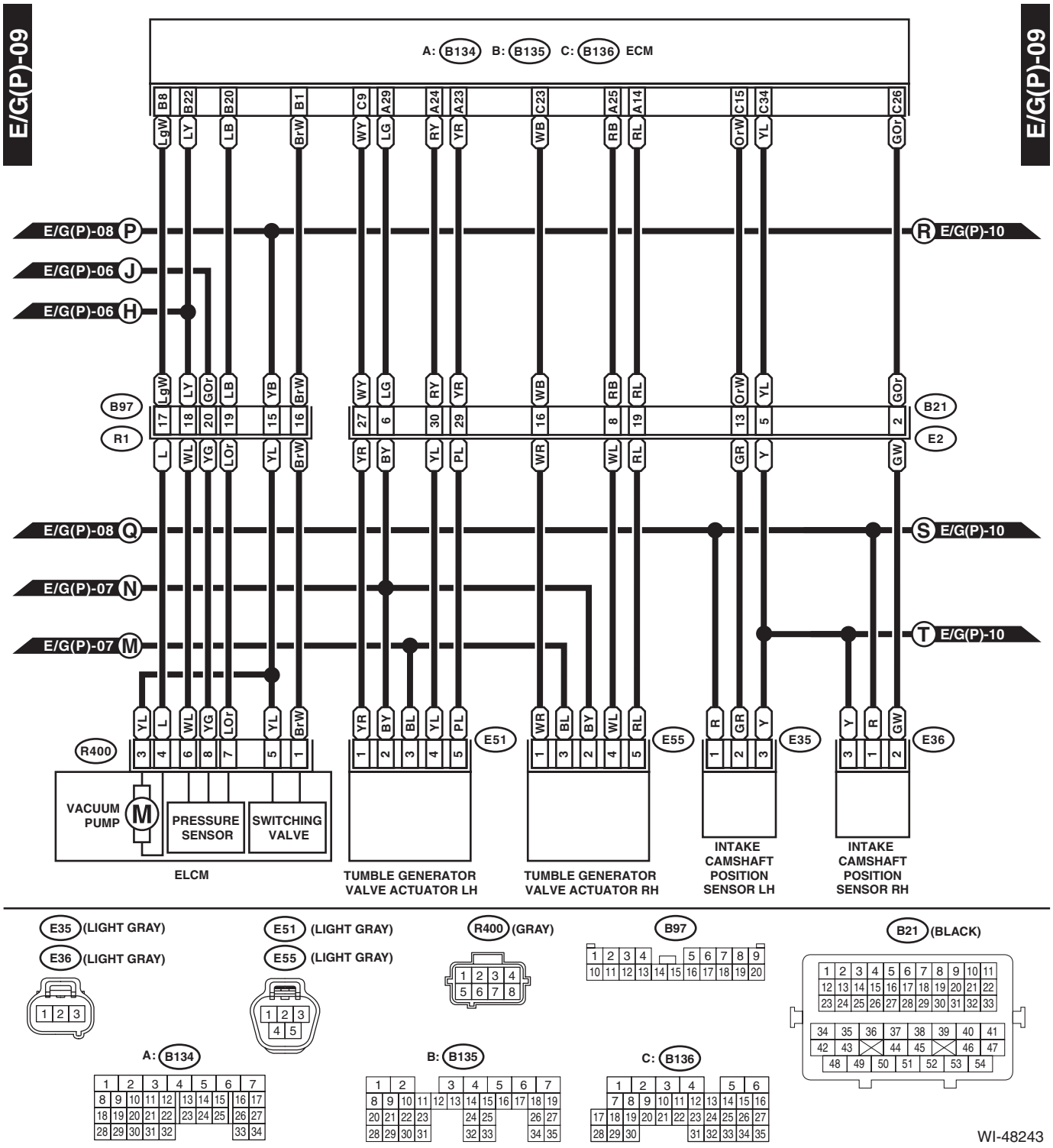
E/G(P)-09
E/G(P)-09
A: B134 B: B135 C: B136 ECM
B8 B22 B20 B1 C9 A29 A24 A23 C23 A25 A14 C15 C34 C26
LgW LY LB BrW WY LG RY YR WB RB RL OrW YL GOr
E/G(P)-08 P
E/G(P)-06 J
E/G(P)-06 H
R E/G(P)-10
B97
R1
17 18 20 19 15 16
27 6 30 29 16 8 19 13 5 2
B21
E2
L WL YG LOr YL BrW YR BY YL PL WR WL RL GR Y GW
E/G(P)-08 Q
E/G(P)-07 N
E/G(P)-07 M
S E/G(P)-10
T E/G(P)-10
YL L WL YG LOr YL BrW YR BY BL YL PL WR BL BY WL RL R GR Y Y R GW
R400
3 4 6 8 7 5 1
1 2 3 4 5
1 3 2 4 5
1 2 3
3 1 2
E51
E55
E35
E36
VACUUM PUMP
M
PRESSURE SENSOR
SWITCHING VALVE
ELCM
TUMBLE GENERATOR VALVE ACTUATOR LH
TUMBLE GENERATOR VALVE ACTUATOR RH
INTAKE CAMSHAFT POSITION SENSOR LH
INTAKE CAMSHAFT POSITION SENSOR RH

E35 (LIGHT GRAY)
E36 (LIGHT GRAY)
E51 (LIGHT GRAY)
E55 (LIGHT GRAY)
R400 (GRAY)
B97
B21 (BLACK)
A: B134
B: B135
C: B136
WI-48243

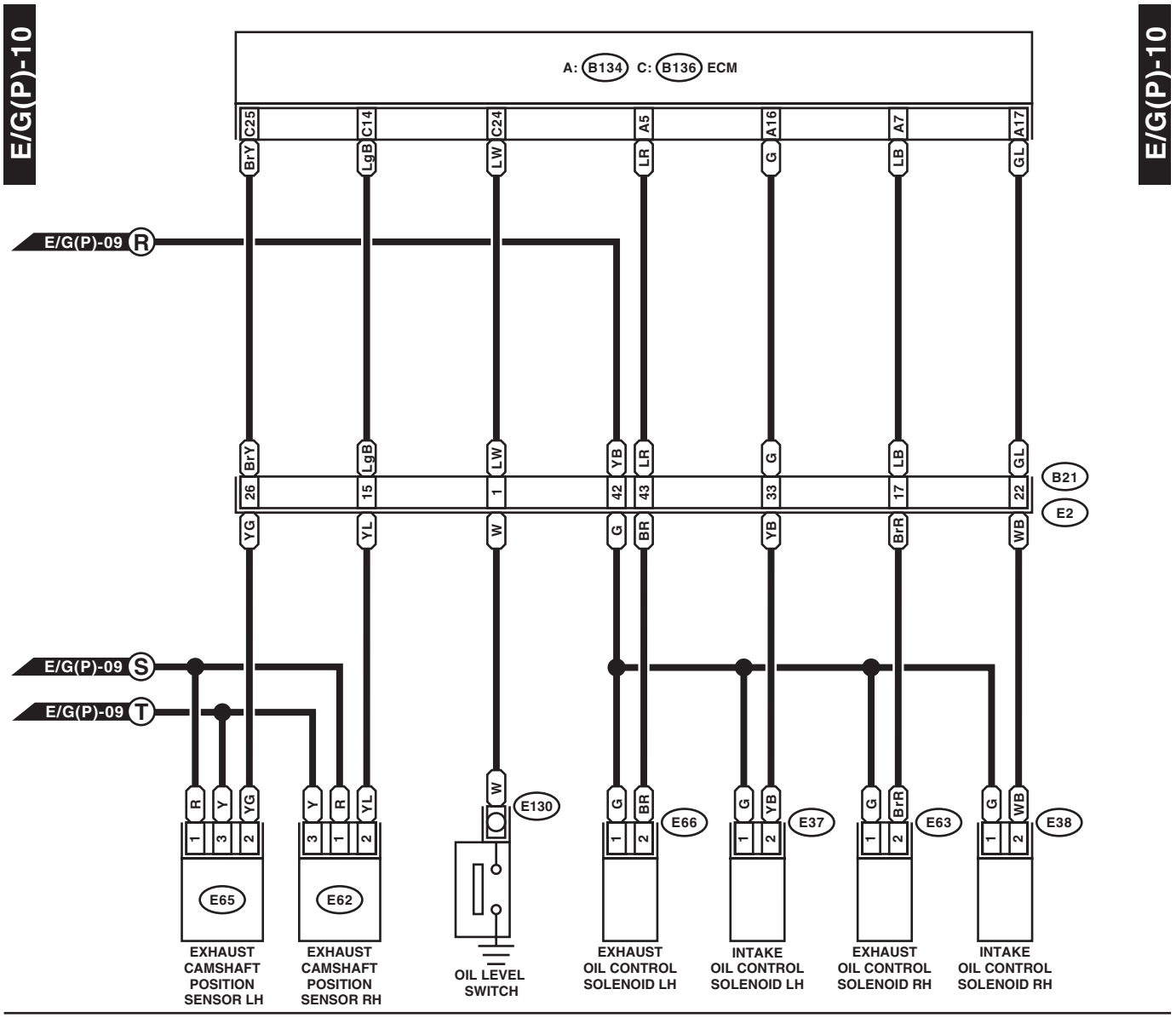

(BLACK) E37 E63 (BLACK)
(BLACK) E38 E66 (BLACK)

E62 (LIGHT GRAY)
E65 (LIGHT GRAY)

A: B134

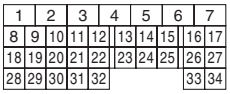

C: B136

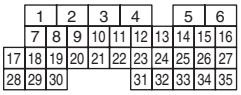

B21 (BLACK)

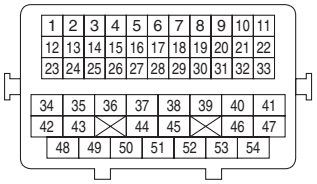

WI-48244

E/G(P)-11

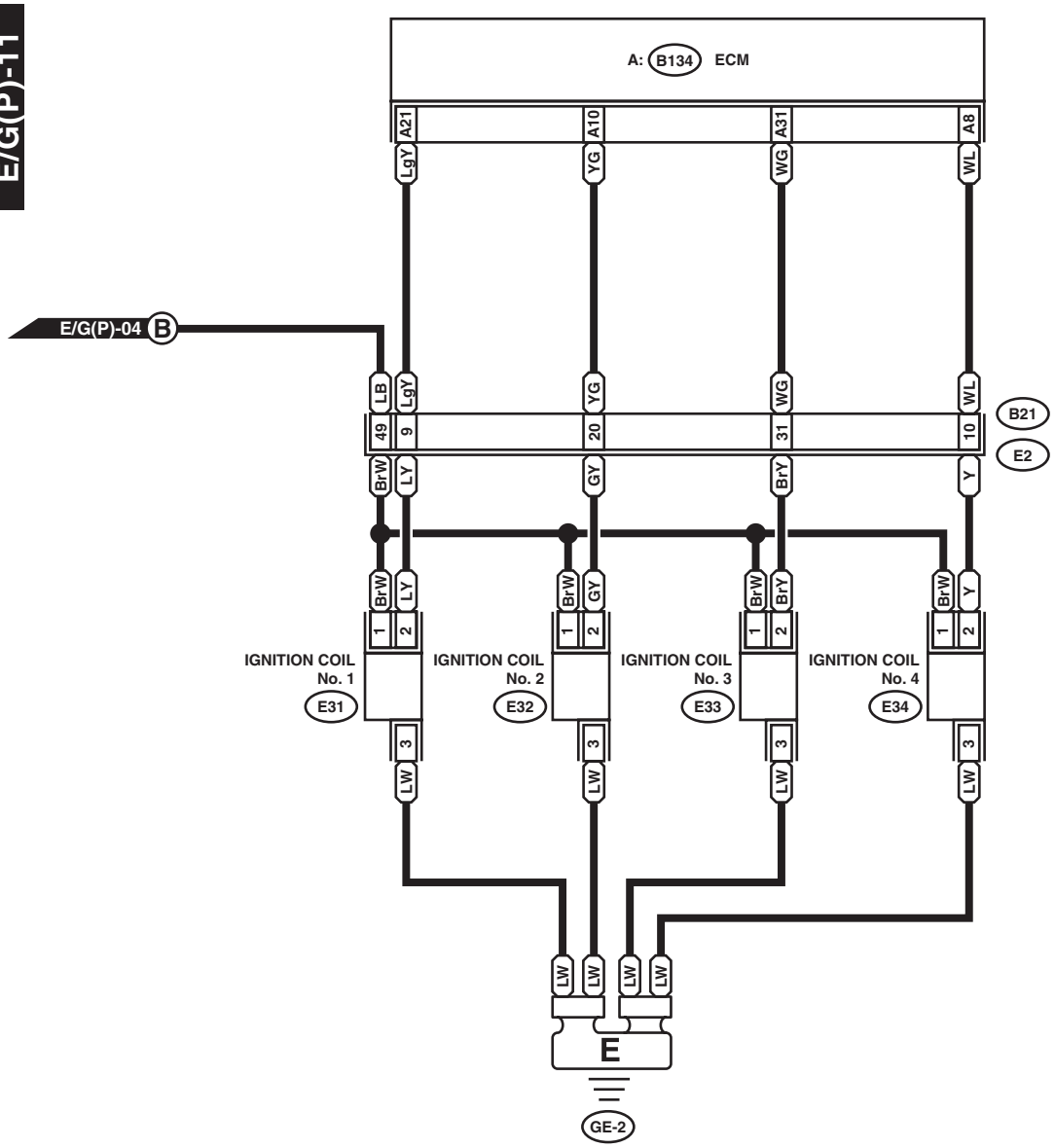

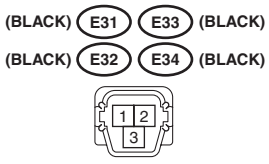

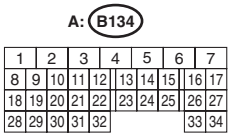

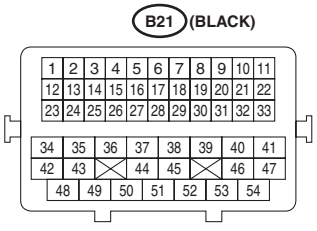

WI-48245

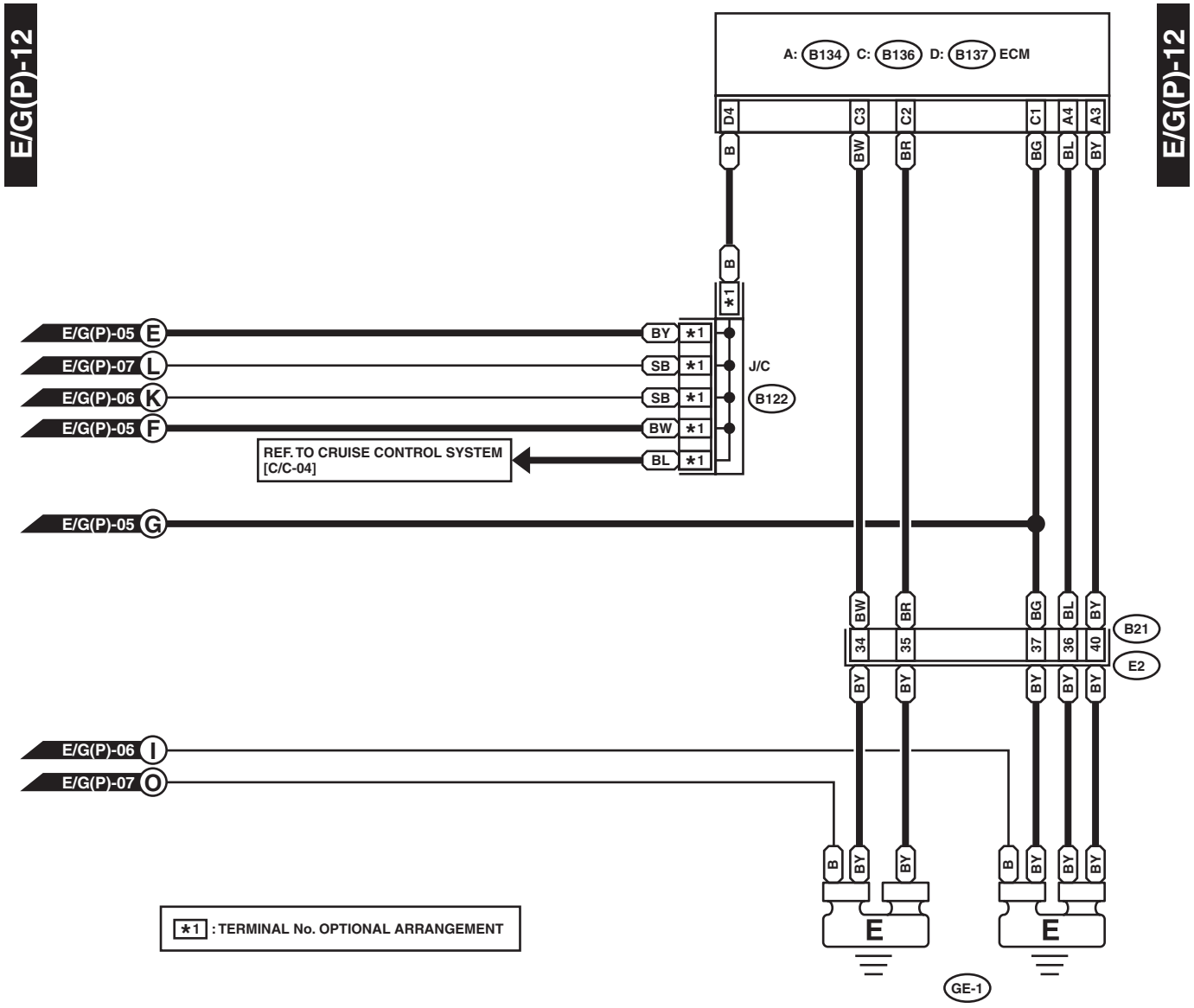
E/G(P)-12
E/G(P)-12
A: B134 C: B136 D: B137 ECM
D4
C3
C2
C1
A4
A3
B
BW
BR
BG
BL
BY
*1
E/G(P)-05 E
E/G(P)-07 L
E/G(P)-06 K
E/G(P)-05 F
J/C
B122
REF. TO CRUISE CONTROL SYSTEM [C/C-04]
E/G(P)-05 G
34
35
37
36
40
B21
E2
E/G(P)-06 I
E/G(P)-07 O
E
GE-1
*1 : TERMINAL No. OPTIONAL ARRANGEMENT

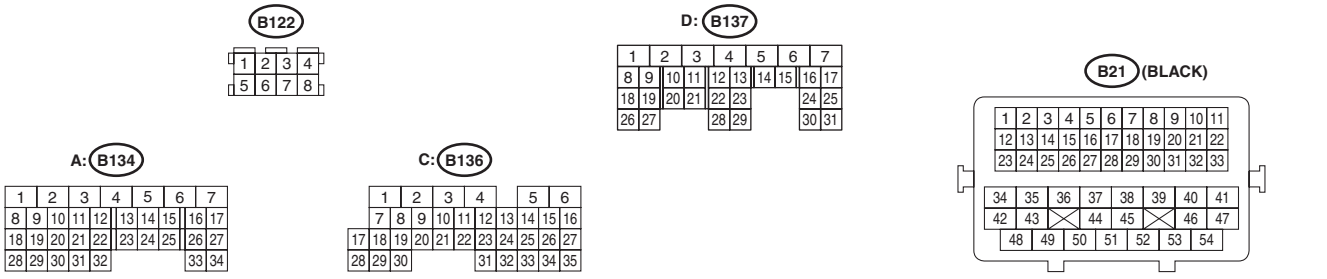
B122
D: B137
A: B134
C: B136
B21 (BLACK)

WI-48246

18.EyeSight System

A: WIRING DIAGRAM

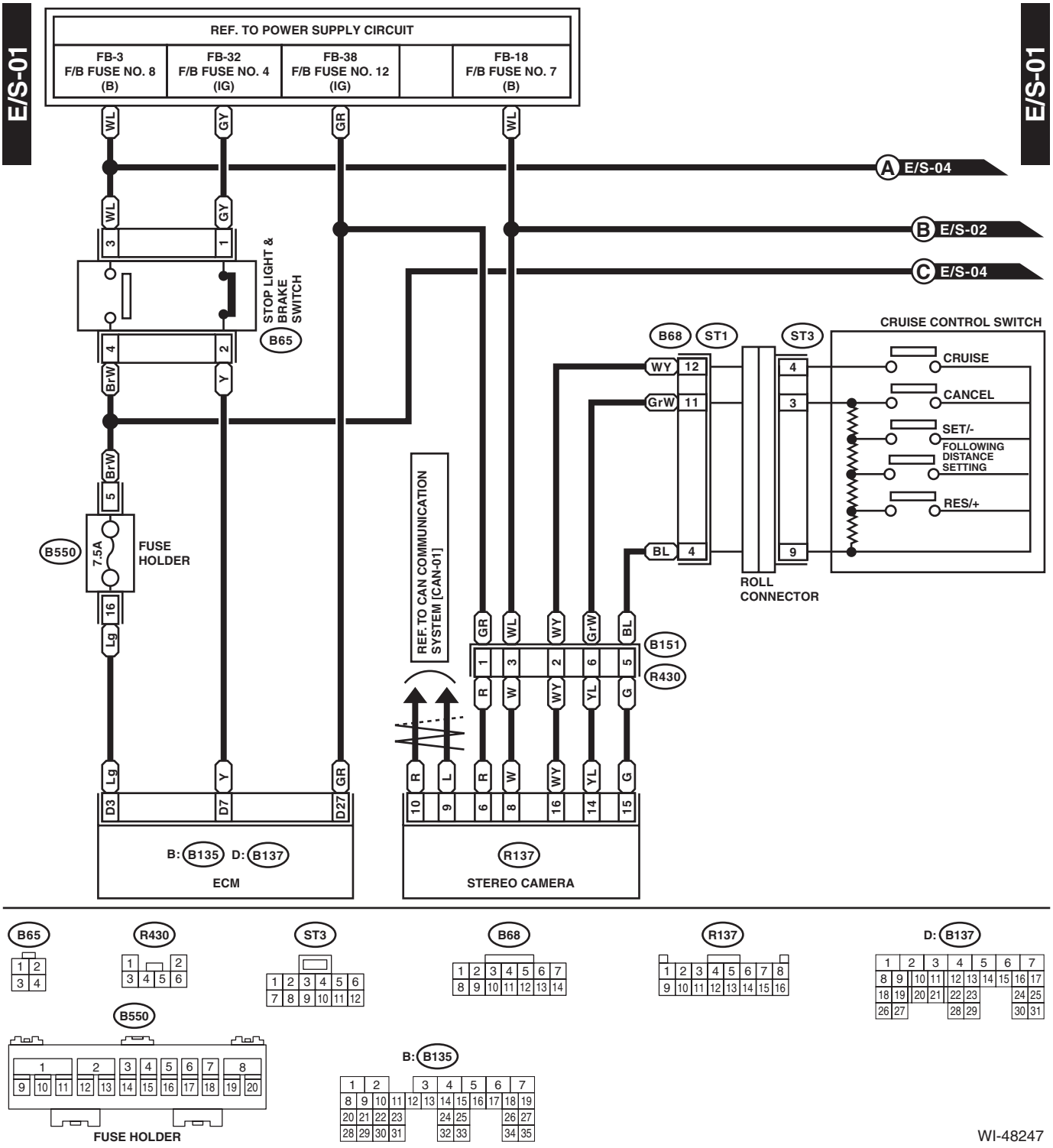

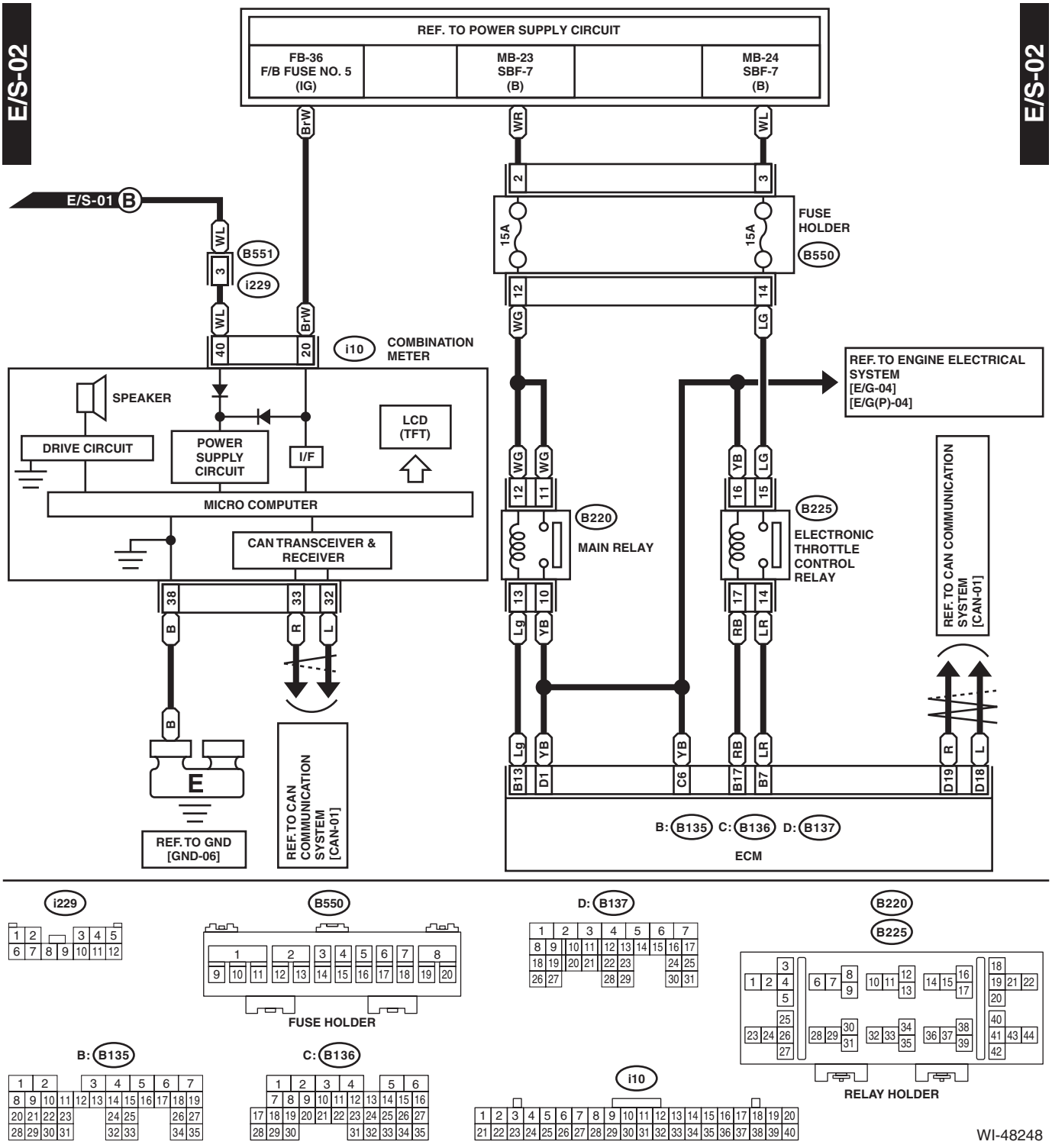
E/S-02
E/S-02
REF. TO POWER SUPPLY CIRCUIT
FB-36
F/B FUSE NO. 5
(IG)
MB-23
SBF-7
(B)
MB-24
SBF-7
(B)
BrW
WR
WL
E/S-01 B
WL
B551
3
i229
WL
BrW
40
20
i10
COMBINATION METER
2
3
15A
15A
FUSE HOLDER
B550
12
14
WG
LG
SPEAKER
DRIVE CIRCUIT
POWER SUPPLY CIRCUIT
I/F
LCD (TFT)
MICRO COMPUTER
CAN TRANSCEIVER & RECEIVER
REF. TO ENGINE ELECTRICAL SYSTEM [E/G-04] [E/G(P)-04]
WG
WG
YB
LG
12
11
16
15
B220
MAIN RELAY
B225
ELECTRONIC THROTTLE CONTROL RELAY
REF. TO CAN COMMUNICATION SYSTEM [CAN-01]
38
33
32
13
10
17
14
B
R
L
Lg
YB
RB
LR
B
Lg
YB
YB
RB
LR
R
L
E
B13
D1
C6
B17
B7
D19
D18
REF. TO GND [GND-06]
REF. TO CAN COMMUNICATION SYSTEM [CAN-01]
B: B135 C: B136 D: B137
ECM
i229
B550
D: B137
B220
B225
FUSE HOLDER
B: B135
C: B136
i10
RELAY HOLDER
WI-48248

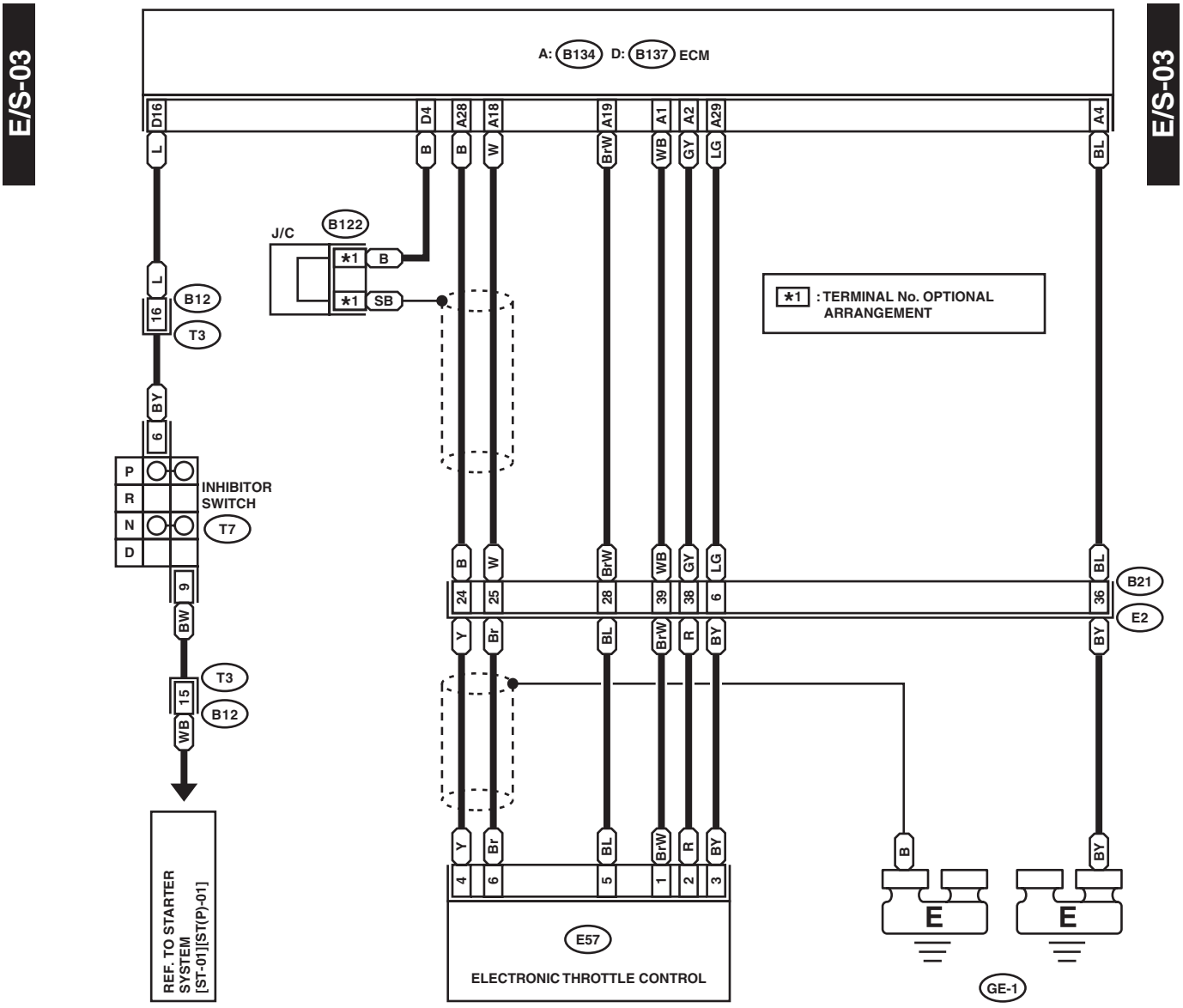
E/S-03
E/S-03
A: B134 D: B137 ECM
D16
D4
A28
A18
A19
A1
A2
A29
A4
L
B
B
W
BrW
WB
GY
LG
BL
J/C
B122
*1
B
*1
SB
*1 : TERMINAL No. OPTIONAL ARRANGEMENT
L
16
B12
T3
BY
6
P
R
N
D
INHIBITOR SWITCH
T7
9
BW
T3
15
WB
B12
REF. TO STARTER SYSTEM [ST-01][ST(P)-01]
B
W
BrW
WB
GY
LG
BL
24
25
28
39
38
6
36
B21
E2
Y
Br
BL
BrW
R
BY
BY
Y
Br
BL
BrW
R
BY
B
BY
4
6
5
1
2
3
E57
ELECTRONIC THROTTLE CONTROL
E
E
GE-1

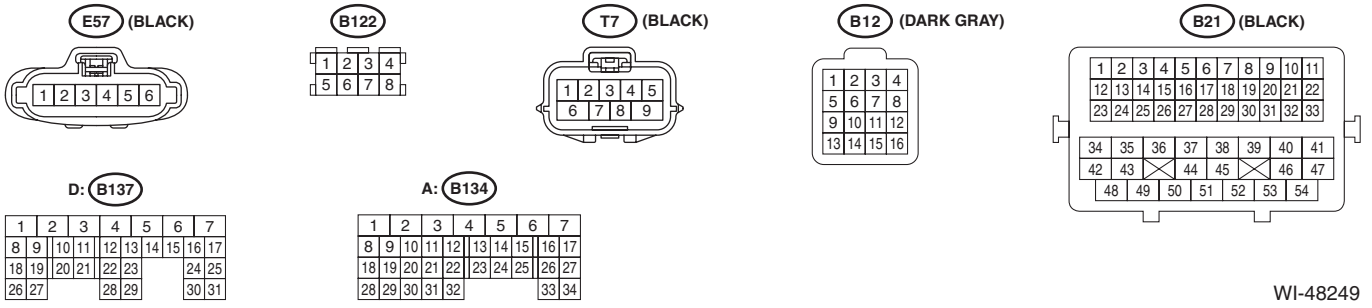
E57 (BLACK)
1 2 3 4 5 6
B122
1 2 3 4
5 6 7 8
T7 (BLACK)
1 2 3 4 5
6 7 8 9
B12 (DARK GRAY)
1 2 3 4
5 6 7 8
9 10 11 12
13 14 15 16
B21 (BLACK)
1 2 3 4 5 6 7 8 9 10 11
12 13 14 15 16 17 18 19 20 21 22
23 24 25 26 27 28 29 30 31 32 33
34 35 36 37 38 39 40 41
42 43 44 45 46 47
48 49 50 51 52 53 54
D: B137
1 2 3 4 5 6 7
8 9 10 11 12 13 14 15 16 17
18 19 20 21 22 23 24 25
26 27 28 29 30 31
A: B134
1 2 3 4 5 6 7
8 9 10 11 12 13 14 15 16 17
18 19 20 21 22 23 24 25 26 27
28 29 30 31 32 33 34

WI-48249

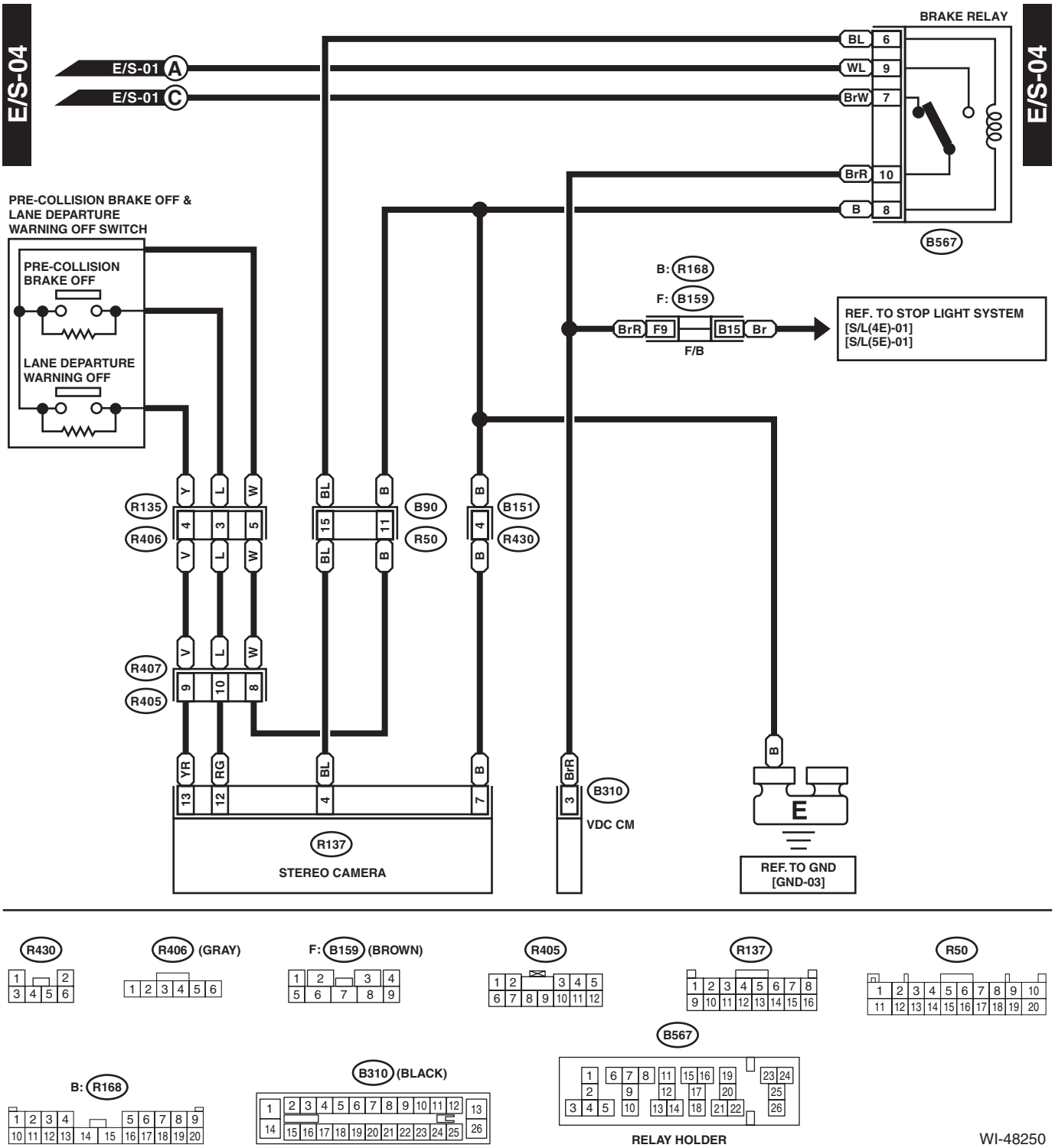
E/S-04
E/S-01 A
E/S-01 C
BRAKE RELAY
BL 6
WL 9
BrW 7
BrR 10
B 8
B567
PRE-COLLISION BRAKE OFF &
LANE DEPARTURE
WARNING OFF SWITCH
PRE-COLLISION
BRAKE OFF
LANE DEPARTURE
WARNING OFF
B: R168
F: B159
BrR F9 B15 Br
F/B
REF. TO STOP LIGHT SYSTEM
[S/L(4E)-01]
[S/L(5E)-01]
R135
R406
B90
R50
B151
R430
R407
R405
R137
STEREO CAMERA
B310
VDC CM
E
REF. TO GND
[GND-03]
R430
R406 (GRAY)
F: B159 (BROWN)
R405
R137
R50
B567
B: R168
B310 (BLACK)
RELAY HOLDER
WI-48250

19.Front Accessory Power Supply Socket System

A: WIRING DIAGRAM

FAPS-01

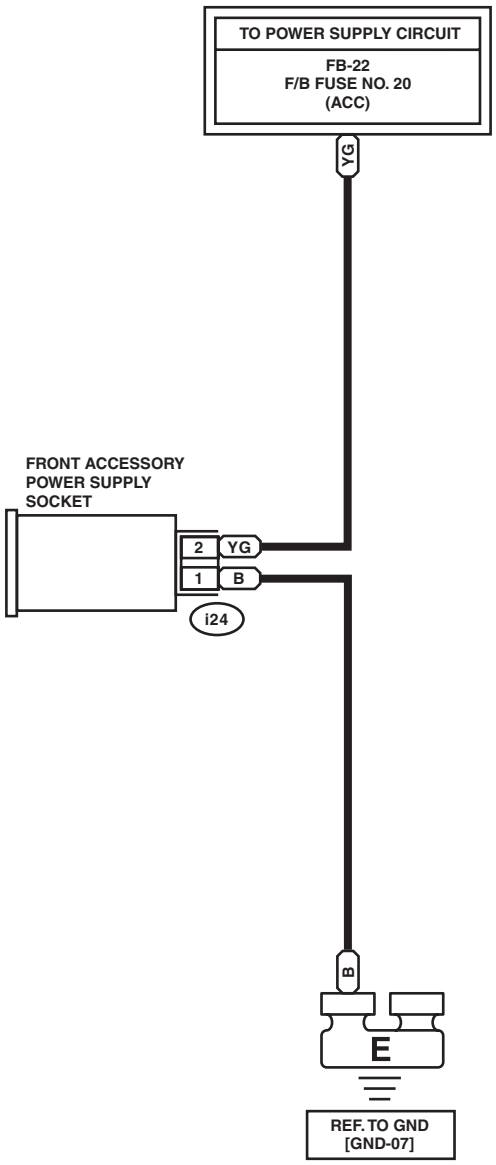

FAPS-01

WI-34207

20.Front Fog Light System

A: WIRING DIAGRAM

1. WITHOUT SRF

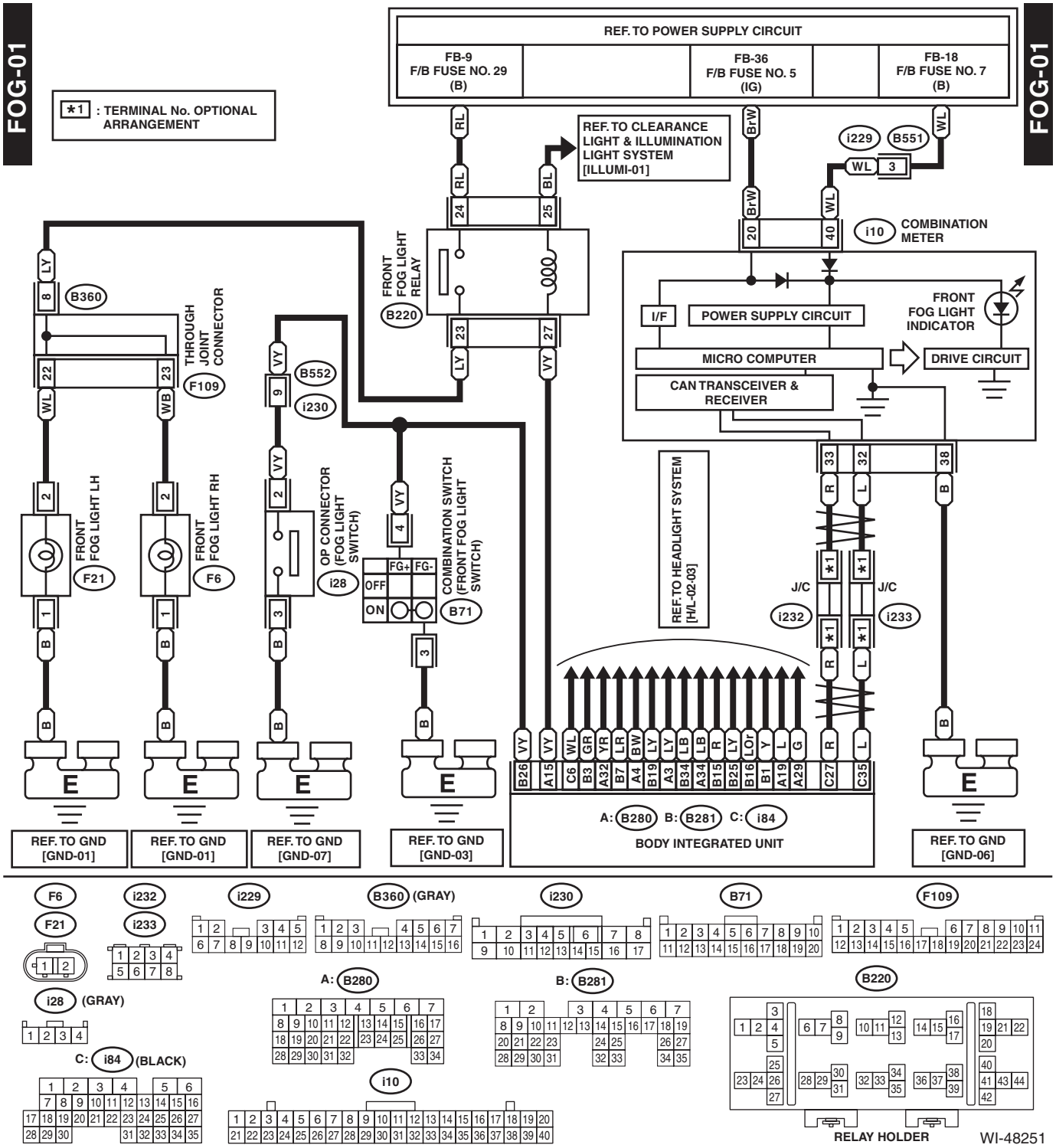

2. WITH SRF

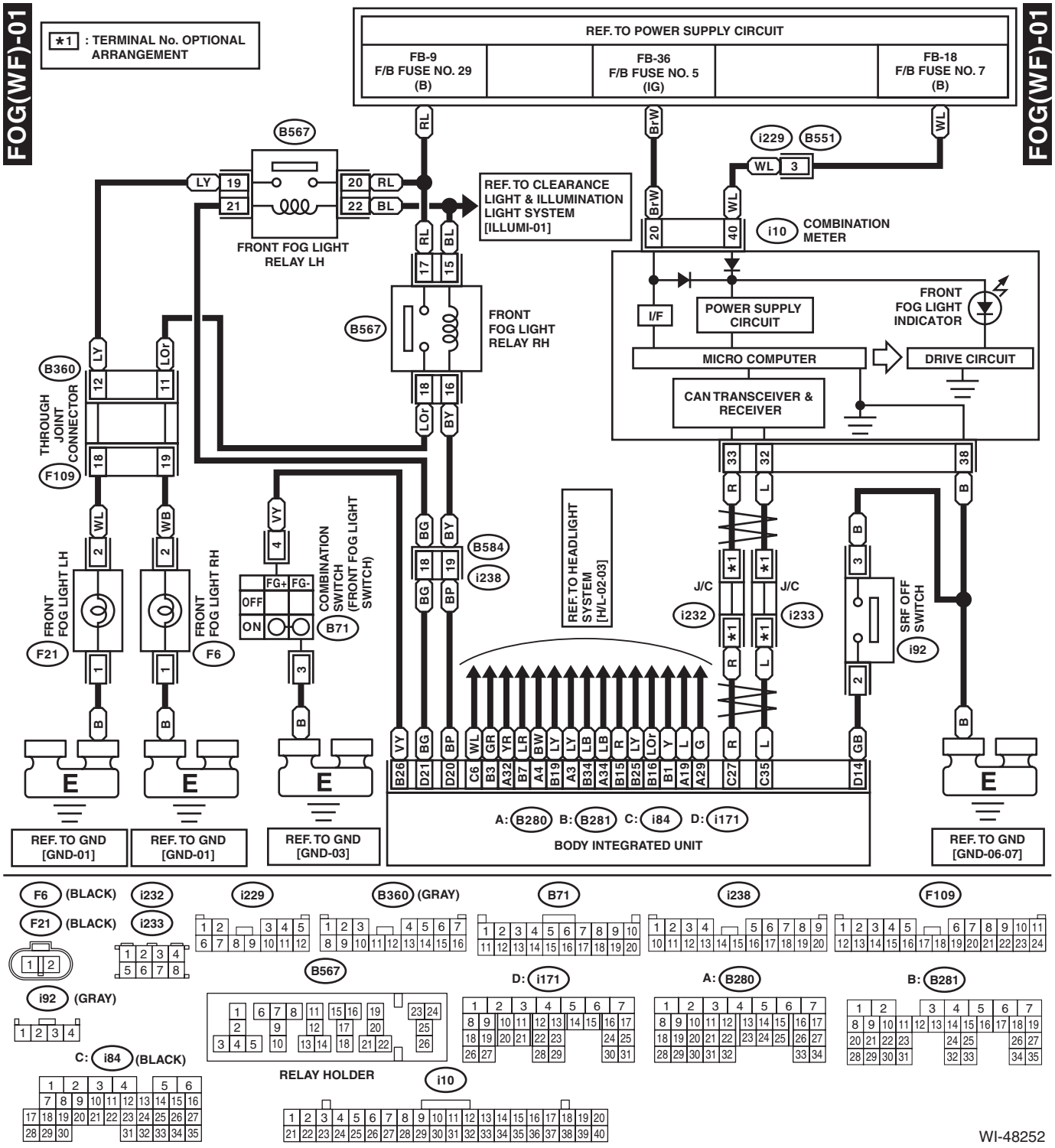

WI-48252

21.Front Wiper and Washer System

A: WIRING DIAGRAM

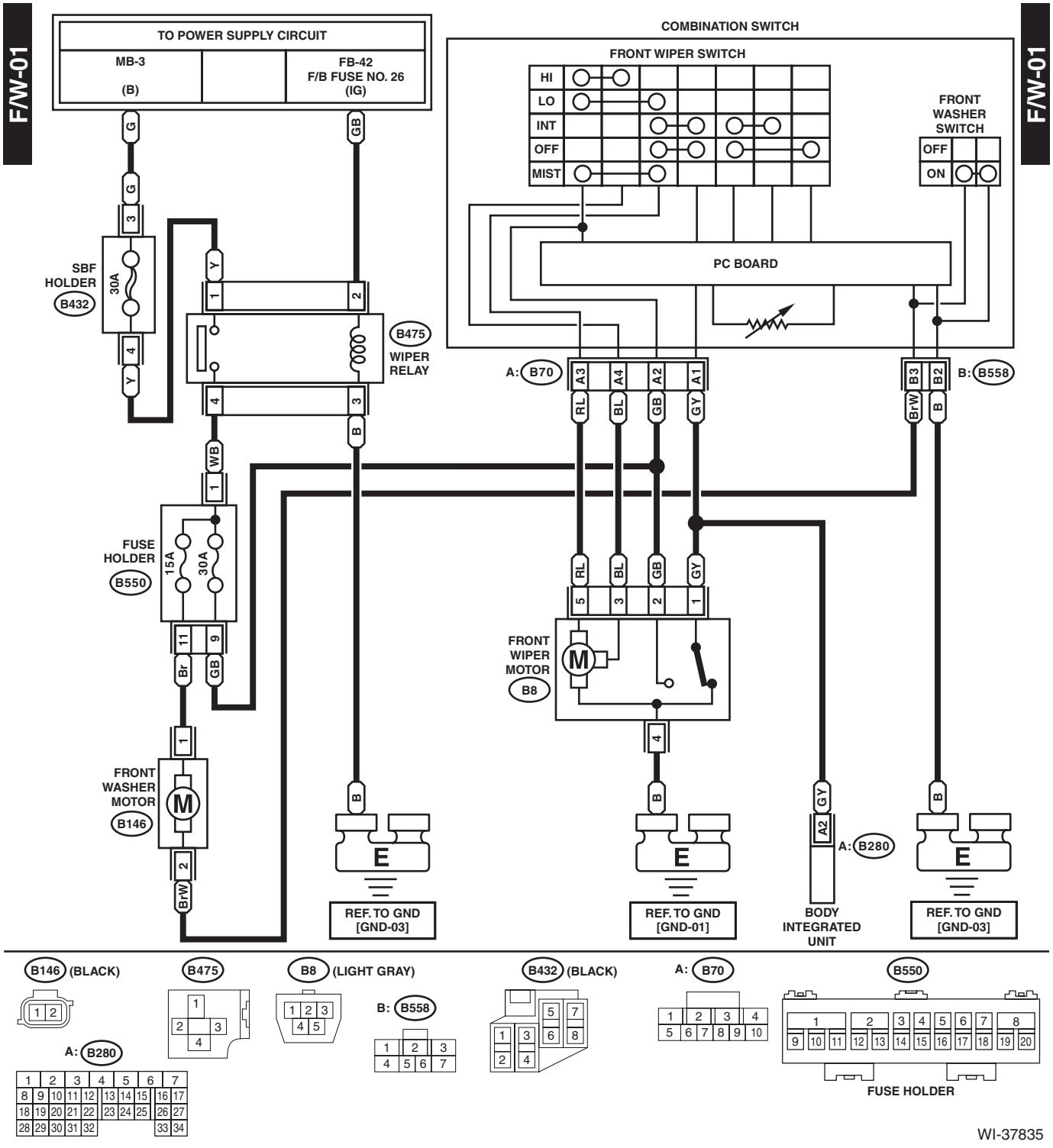

F/W-02

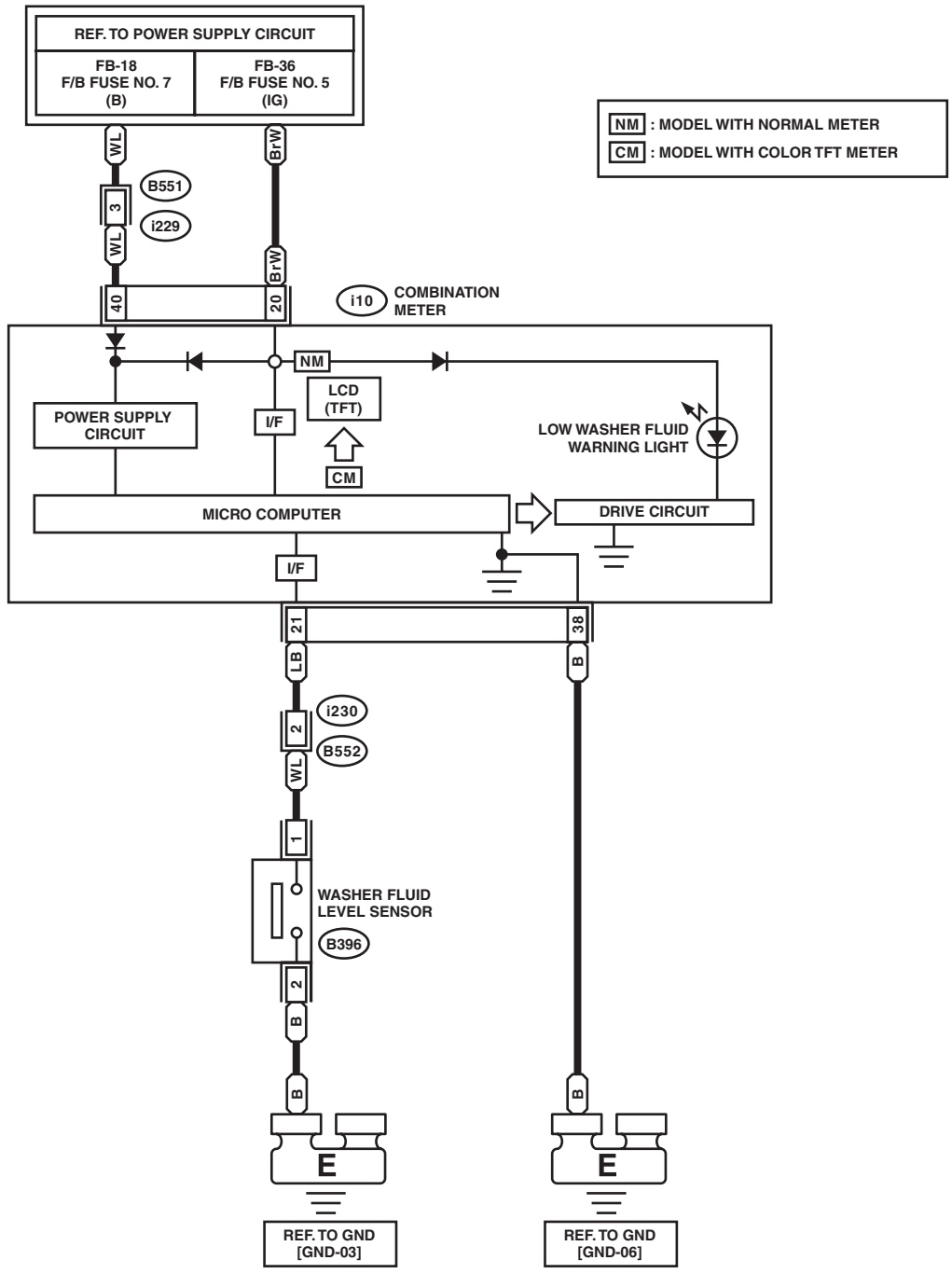

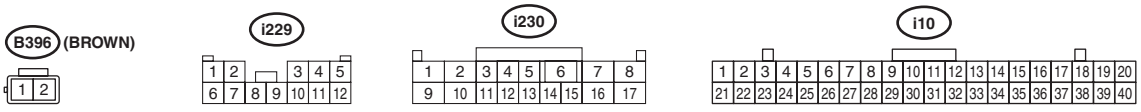

WI-48253

22.Fuel Gauge System

A: WIRING DIAGRAM

F/G-01

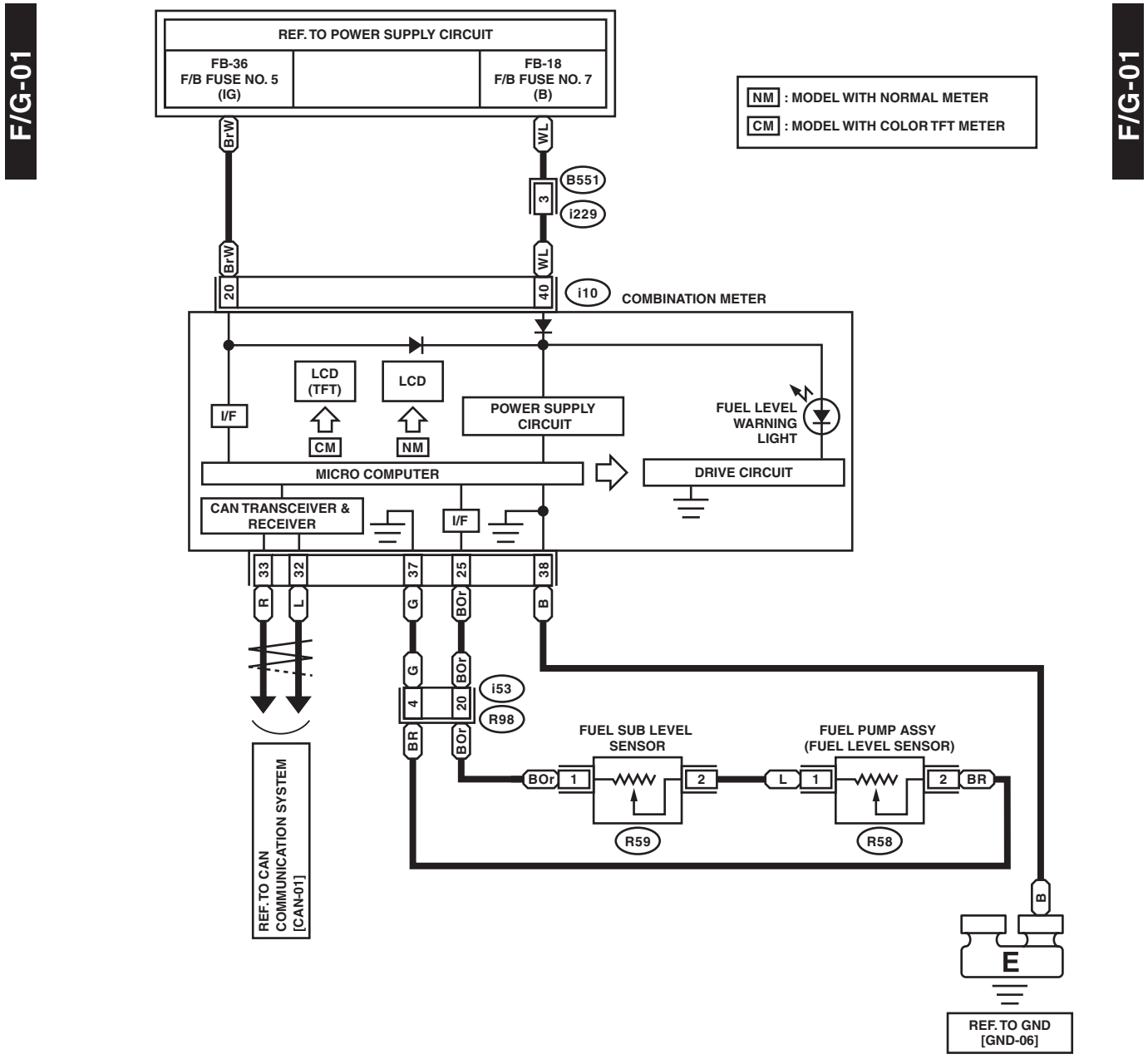

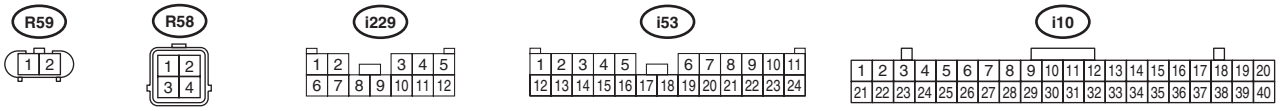

WI-48254

23.Headlight Beam Leveler System

A: WIRING DIAGRAM

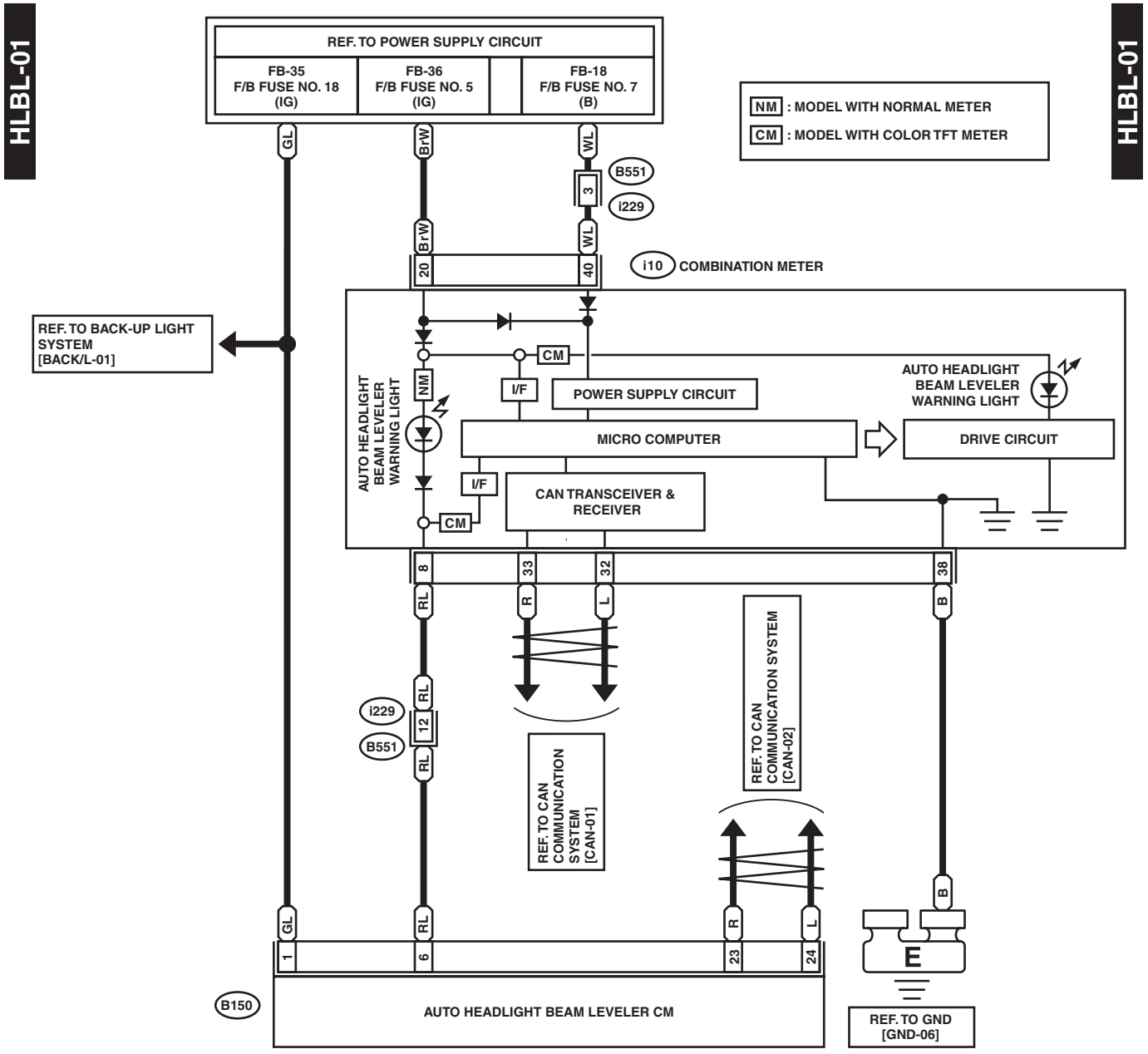

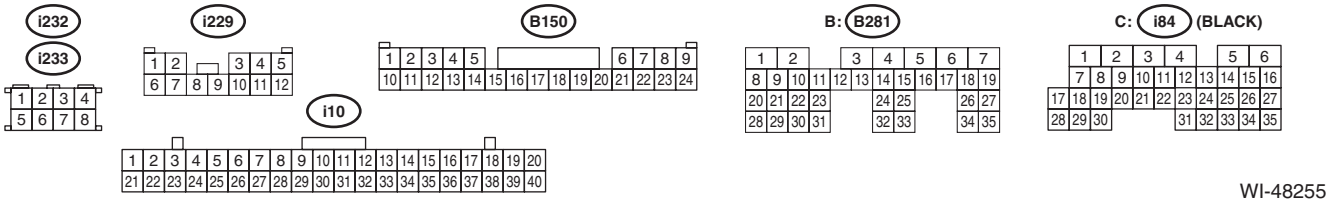

WI-48255

HLBL-02

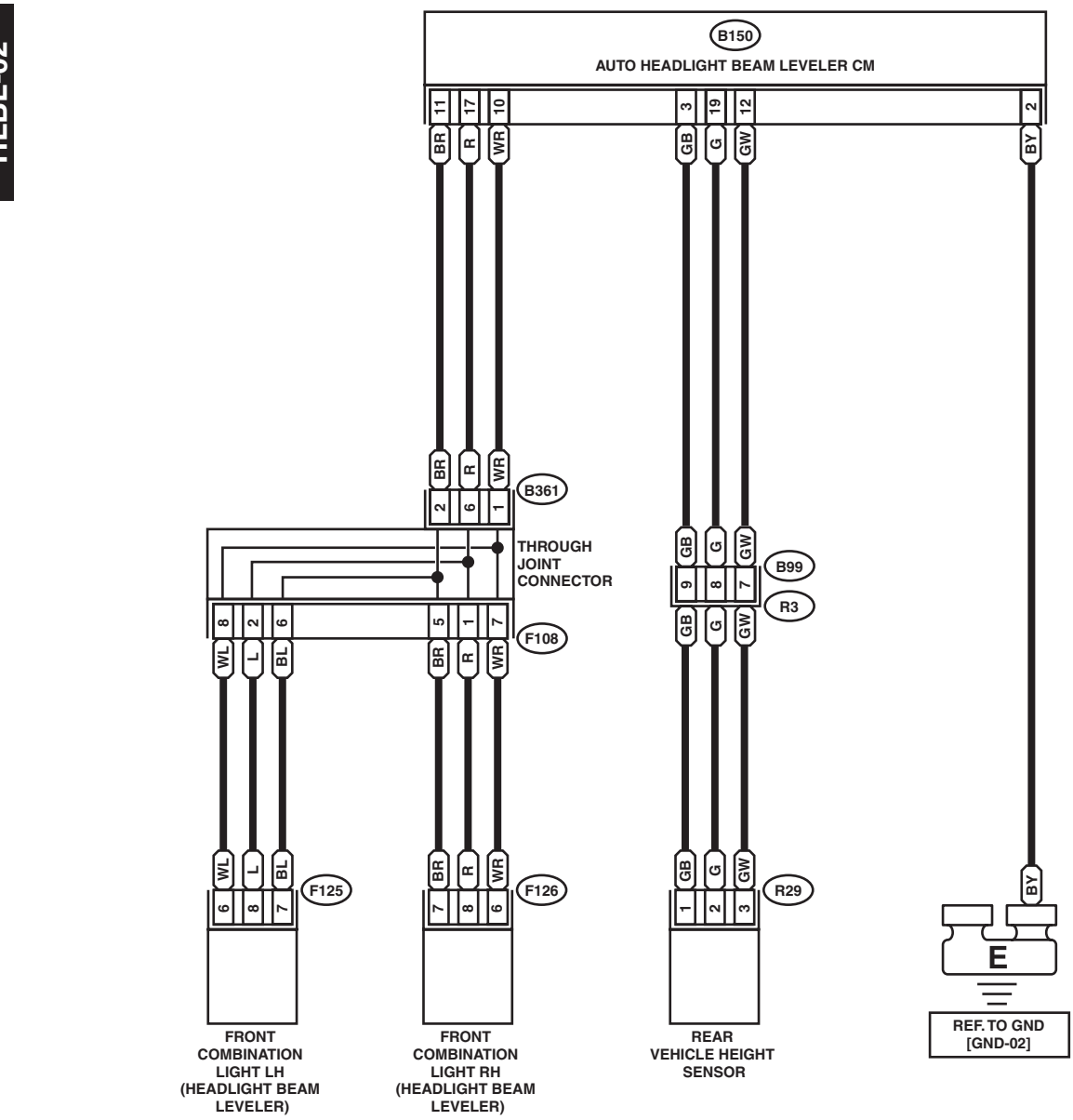

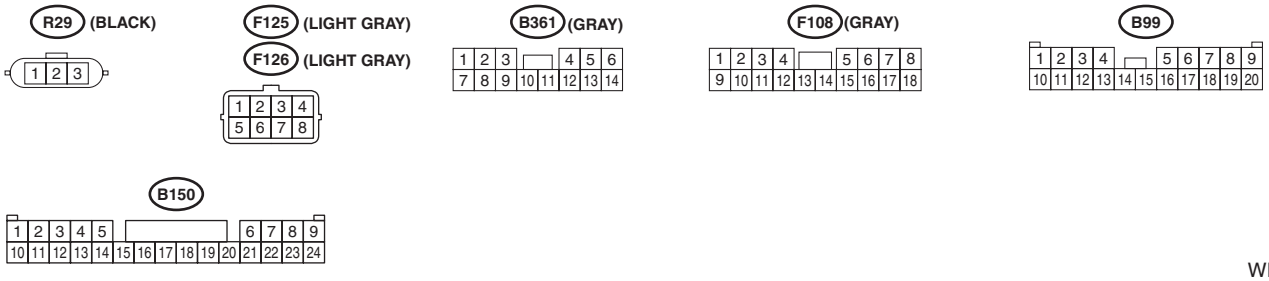

WI-37837

24.Headlight System

A: WIRING DIAGRAM

H/L-01

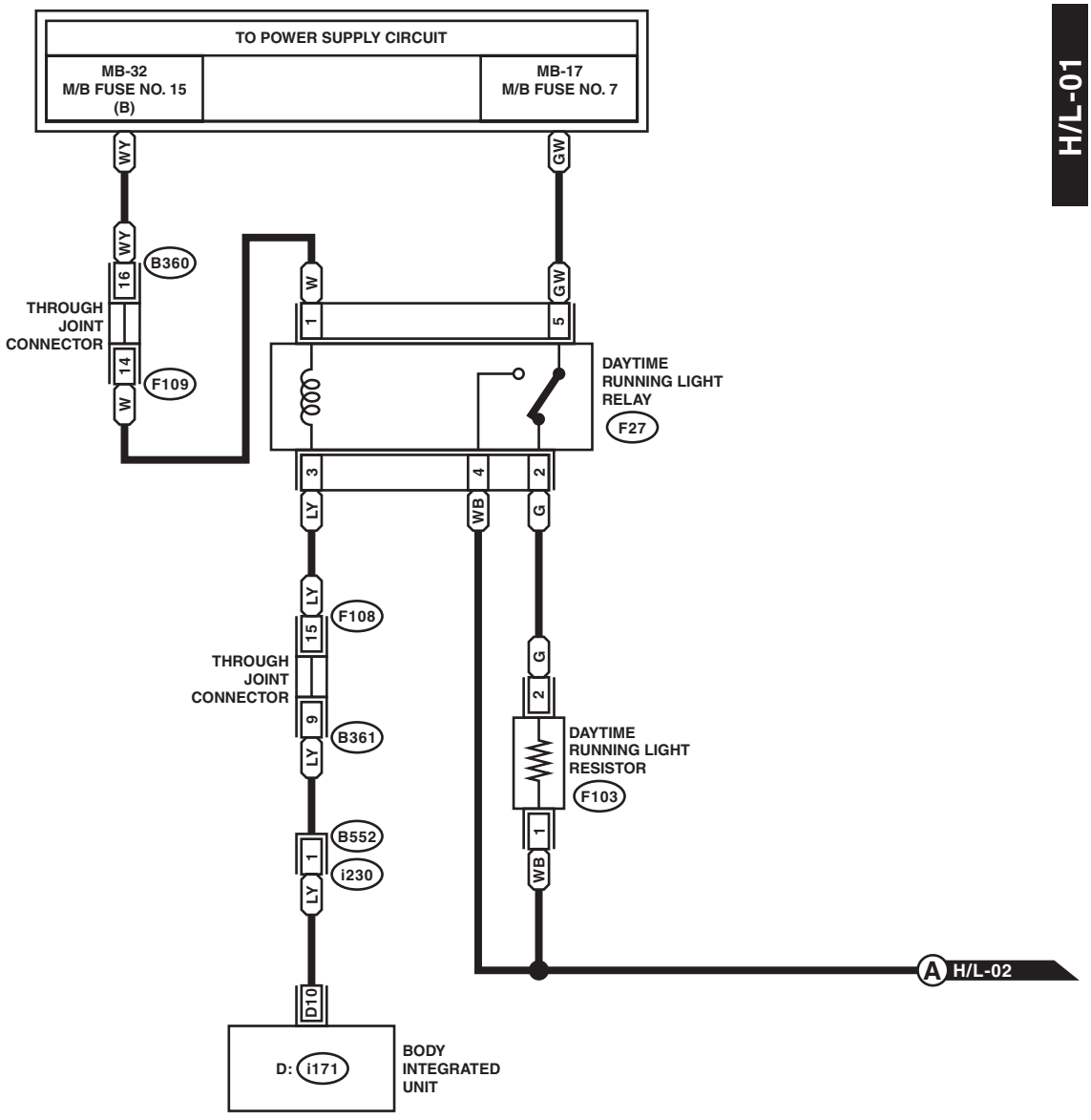

H/L-01

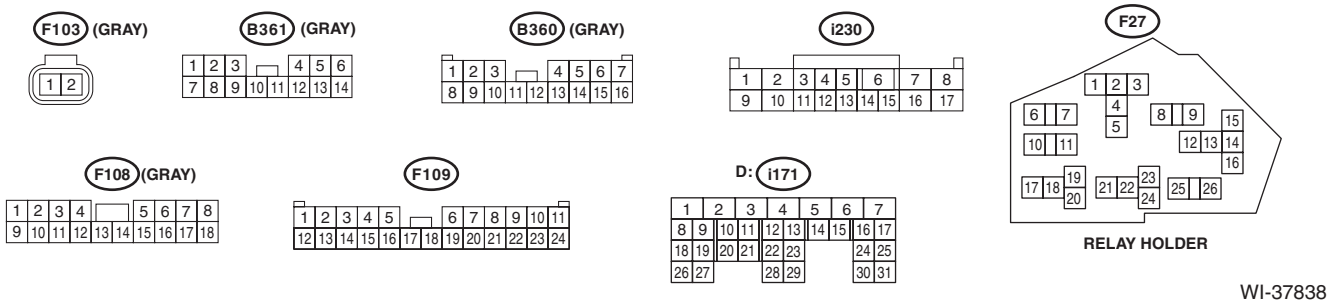

WI-37838

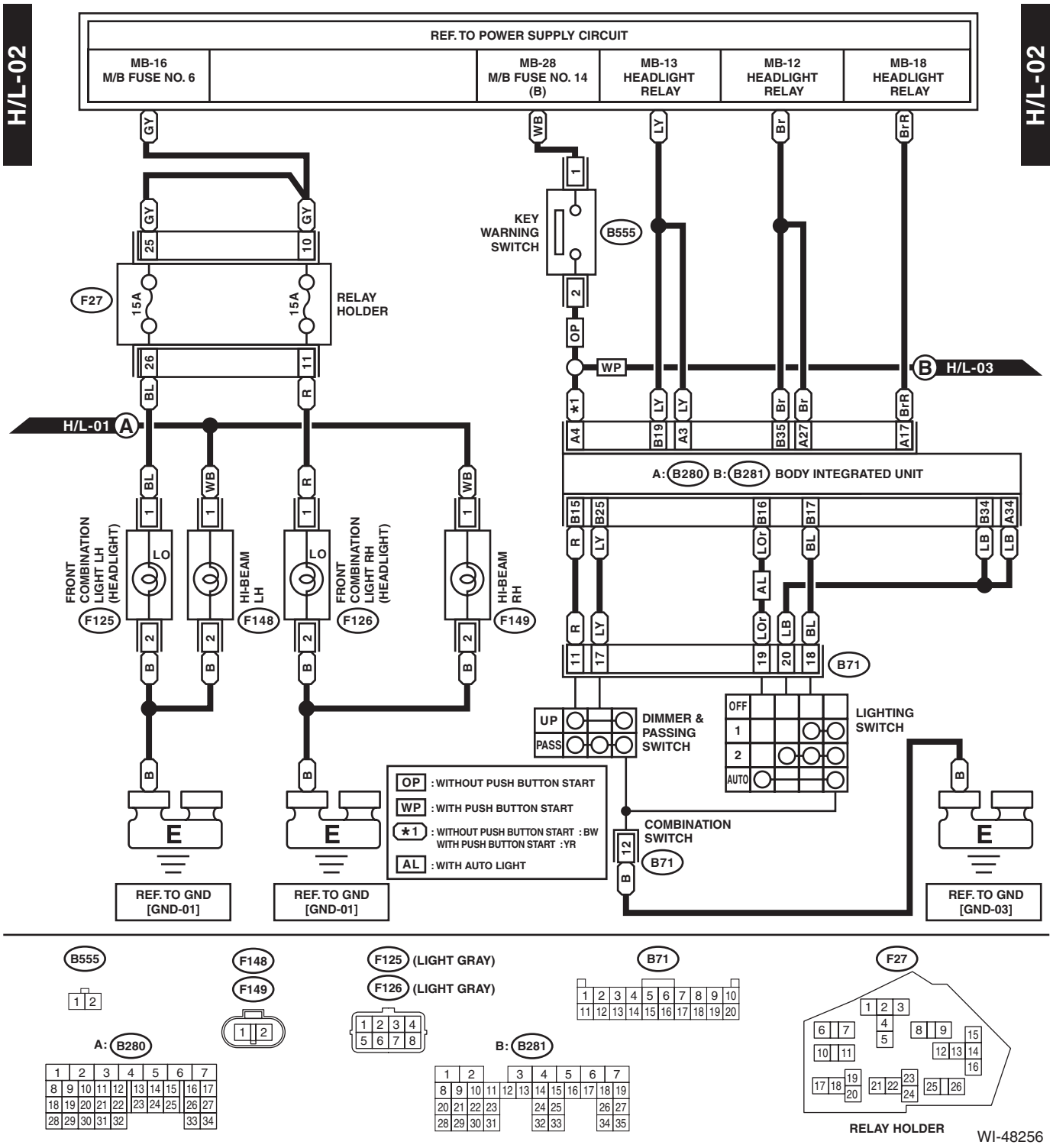
H/L-02
H/L-02
REF. TO POWER SUPPLY CIRCUIT
MB-16 M/B FUSE NO. 6
MB-28 M/B FUSE NO. 14 (B)
MB-13 HEADLIGHT RELAY
MB-12 HEADLIGHT RELAY
MB-18 HEADLIGHT RELAY
F27
15A
15A
RELAY HOLDER
KEY WARNING SWITCH
B555
OP
WP
B H/L-03
H/L-01 A
A: B280 B: B281 BODY INTEGRATED UNIT
FRONT COMBINATION LIGHT LH (HEADLIGHT)
F125
HI-BEAM LH
F148
FRONT COMBINATION LIGHT RH (HEADLIGHT)
F126
HI-BEAM RH
F149
LO
DIMMER & PASSING SWITCH
UP
PASS
LIGHTING SWITCH
OFF
1
2
AUTO
B71
COMBINATION SWITCH
OP : WITHOUT PUSH BUTTON START
WP : WITH PUSH BUTTON START
*1 : WITHOUT PUSH BUTTON START : BW
WITH PUSH BUTTON START : YR
AL : WITH AUTO LIGHT
REF. TO GND [GND-01]
REF. TO GND [GND-01]
REF. TO GND [GND-03]

B555
F148
F149
F125 (LIGHT GRAY)
F126 (LIGHT GRAY)
B71
F27
A: B280
B: B281
RELAY HOLDER
WI-48256

WIRING SYSTEM

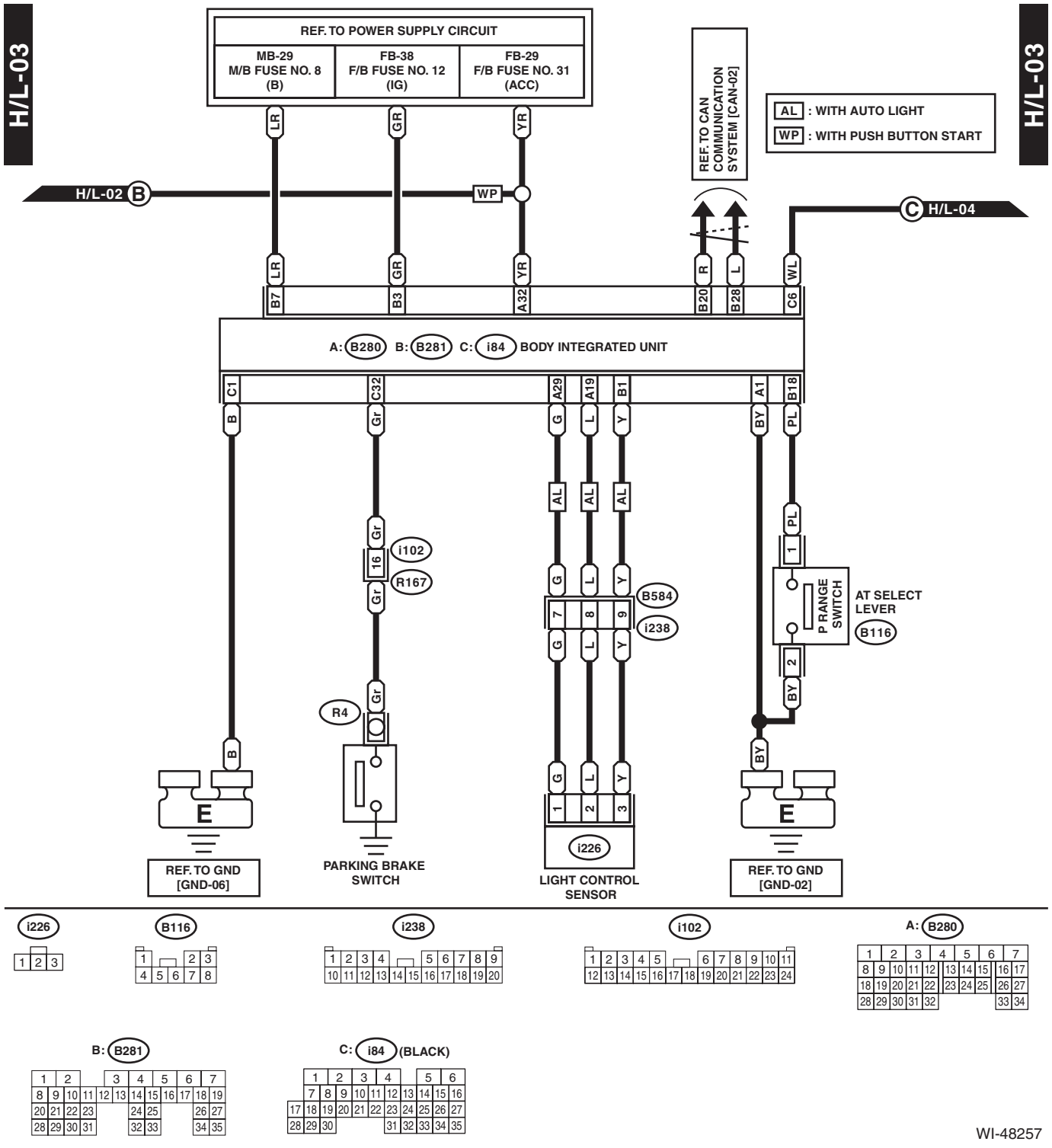

H/L-04

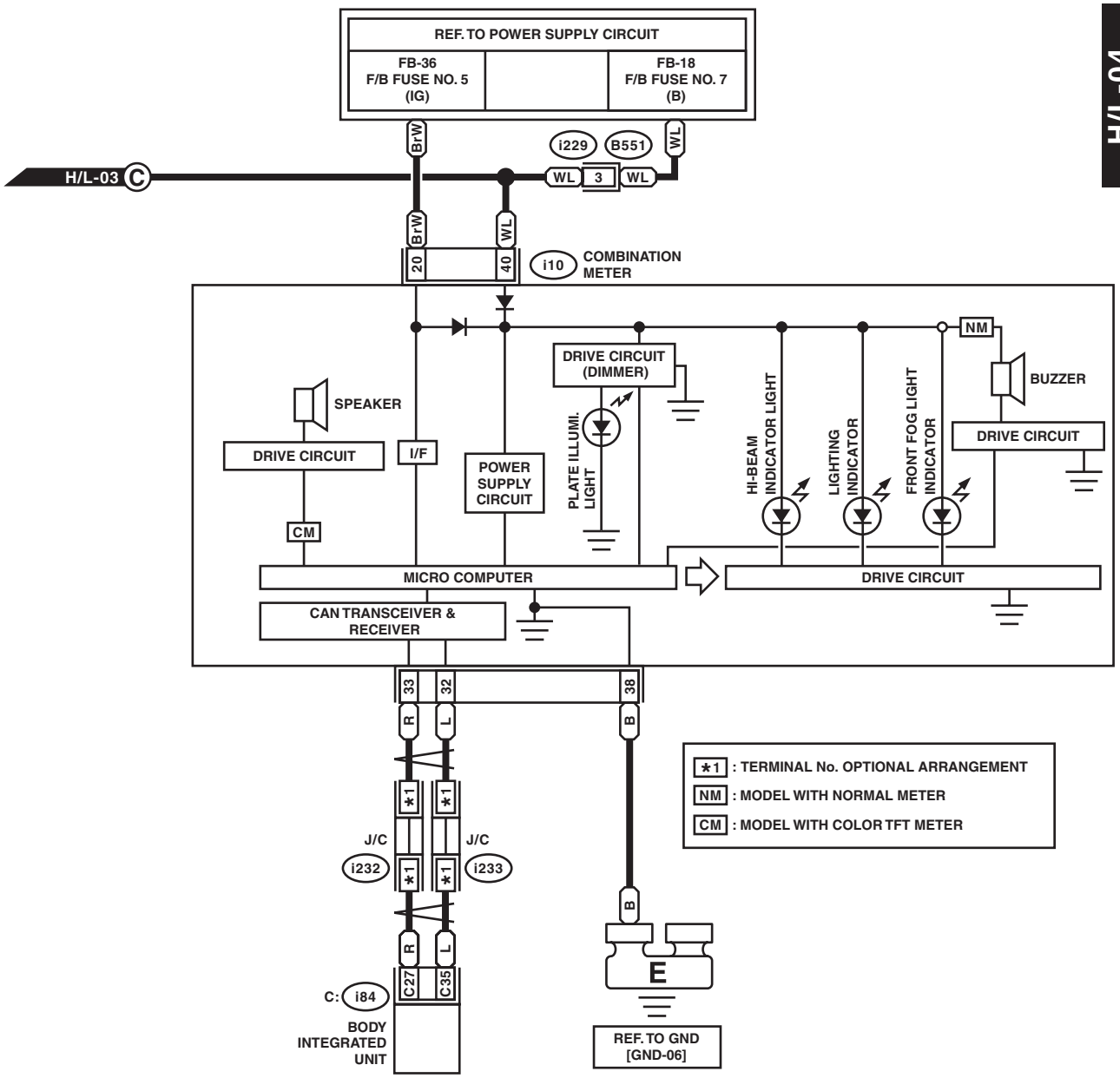

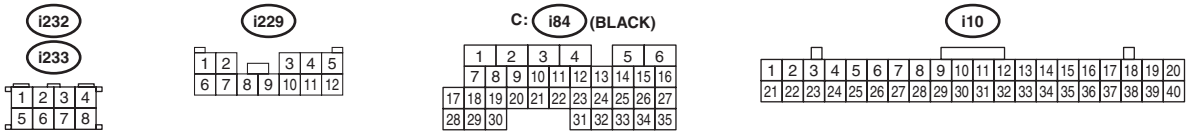

WI-48258

25.Horn System

A: WIRING DIAGRAM

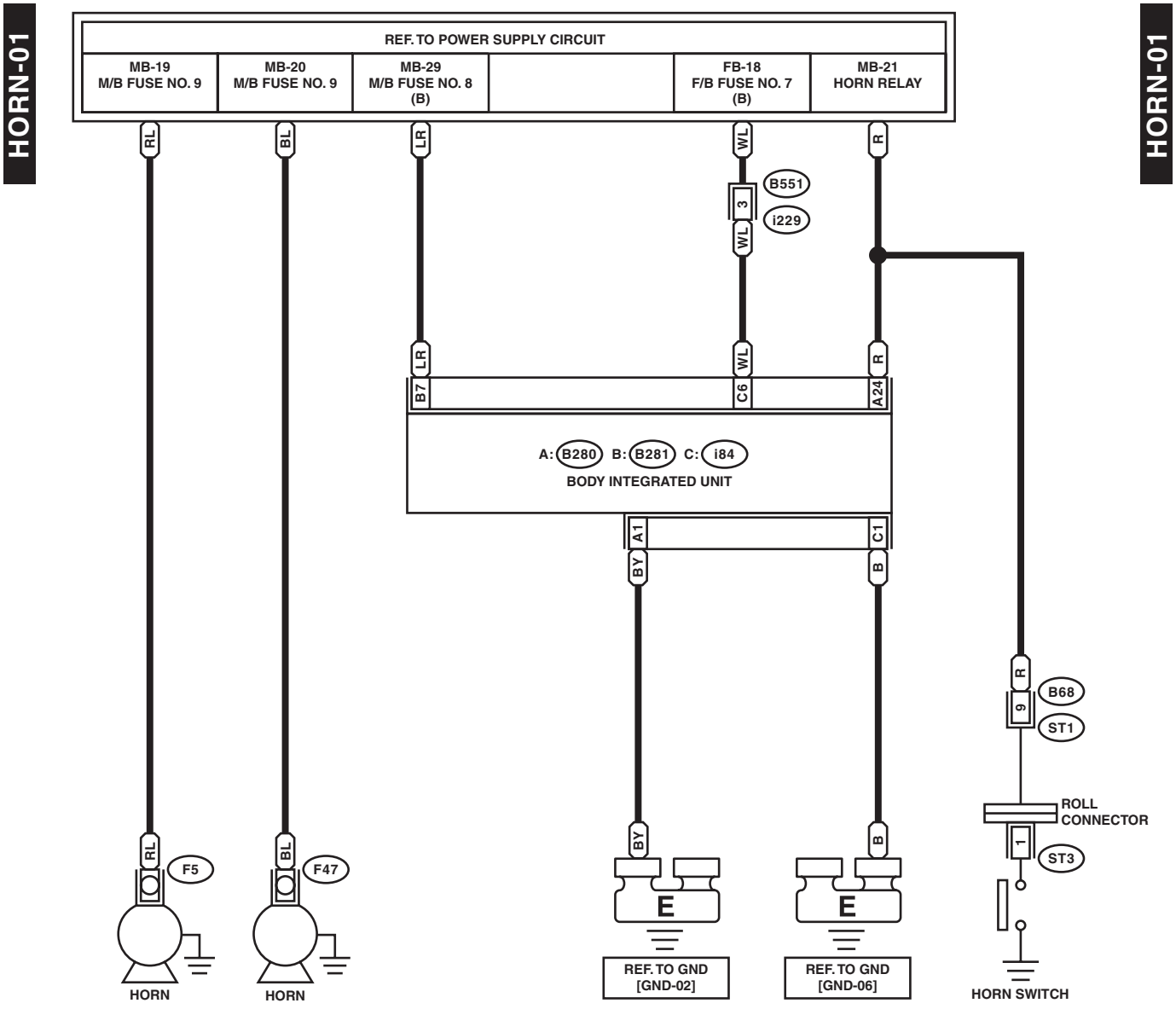

WI-48259

26.Immobilizer System

A: WIRING DIAGRAM

1. WITHOUT PUSH BUTTON START

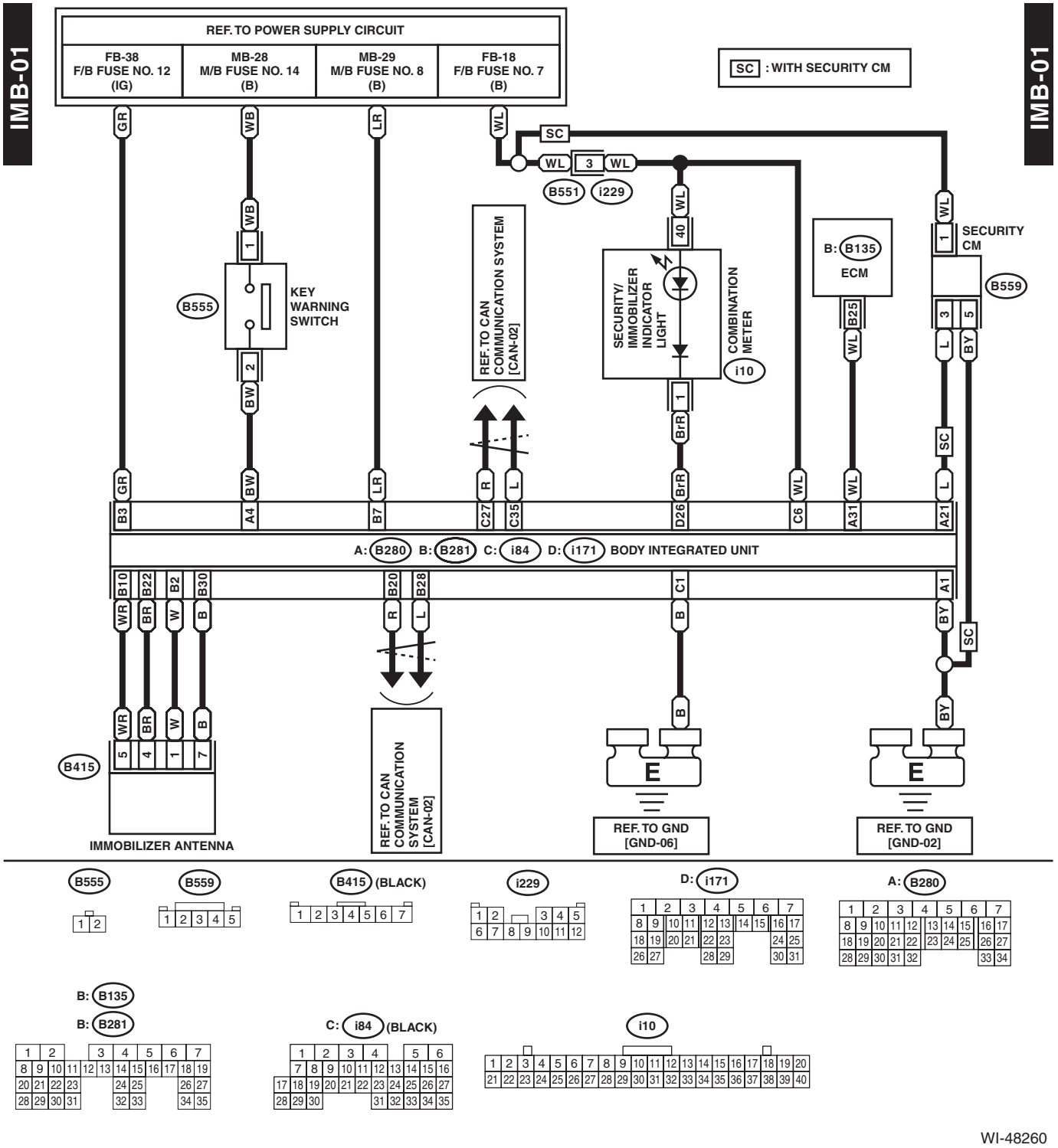

WI-48260

2. WITH PUSH BUTTON START

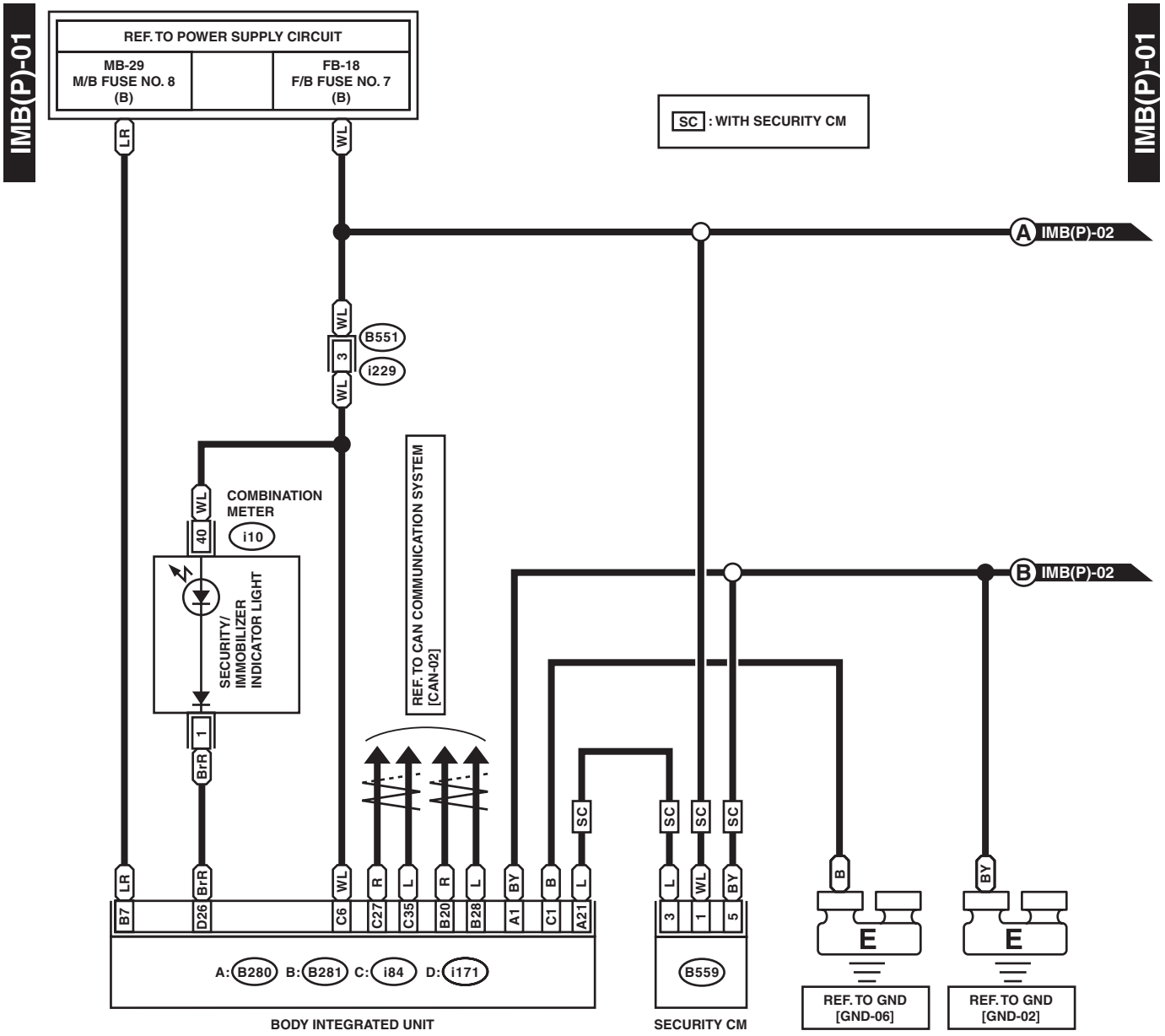

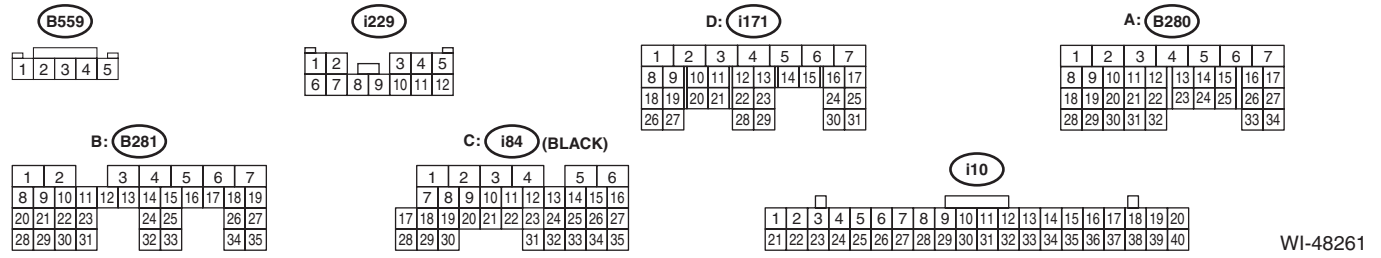

WI-48261

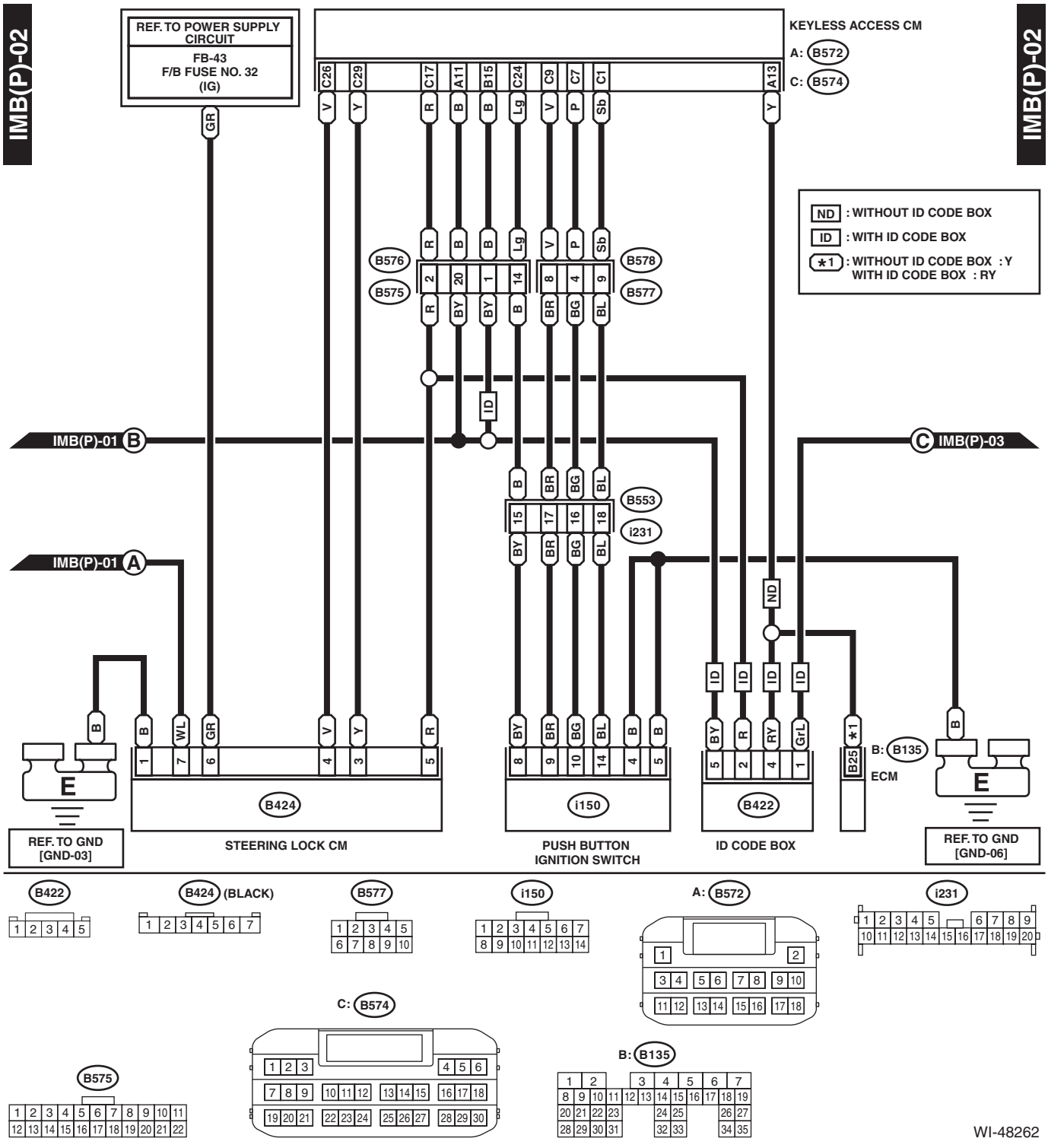
IMB(P)-02
REF. TO POWER SUPPLY CIRCUIT
FB-43
F/B FUSE NO. 32
(IG)
KEYLESS ACCESS CM
A: B572
C: B574
ND : WITHOUT ID CODE BOX
ID : WITH ID CODE BOX
*1 : WITHOUT ID CODE BOX : Y
WITH ID CODE BOX : RY
B576
B575
B578
B577
B553
i231
IMB(P)-01 B
IMB(P)-01 A
IMB(P)-03
REF. TO GND [GND-03]
STEERING LOCK CM
B424
PUSH BUTTON IGNITION SWITCH
i150
ID CODE BOX
B422
B: B135
ECM
REF. TO GND [GND-06]
B422
B424 (BLACK)
B577
i150
A: B572
i231
C: B574
B575
B: B135
WI-48262

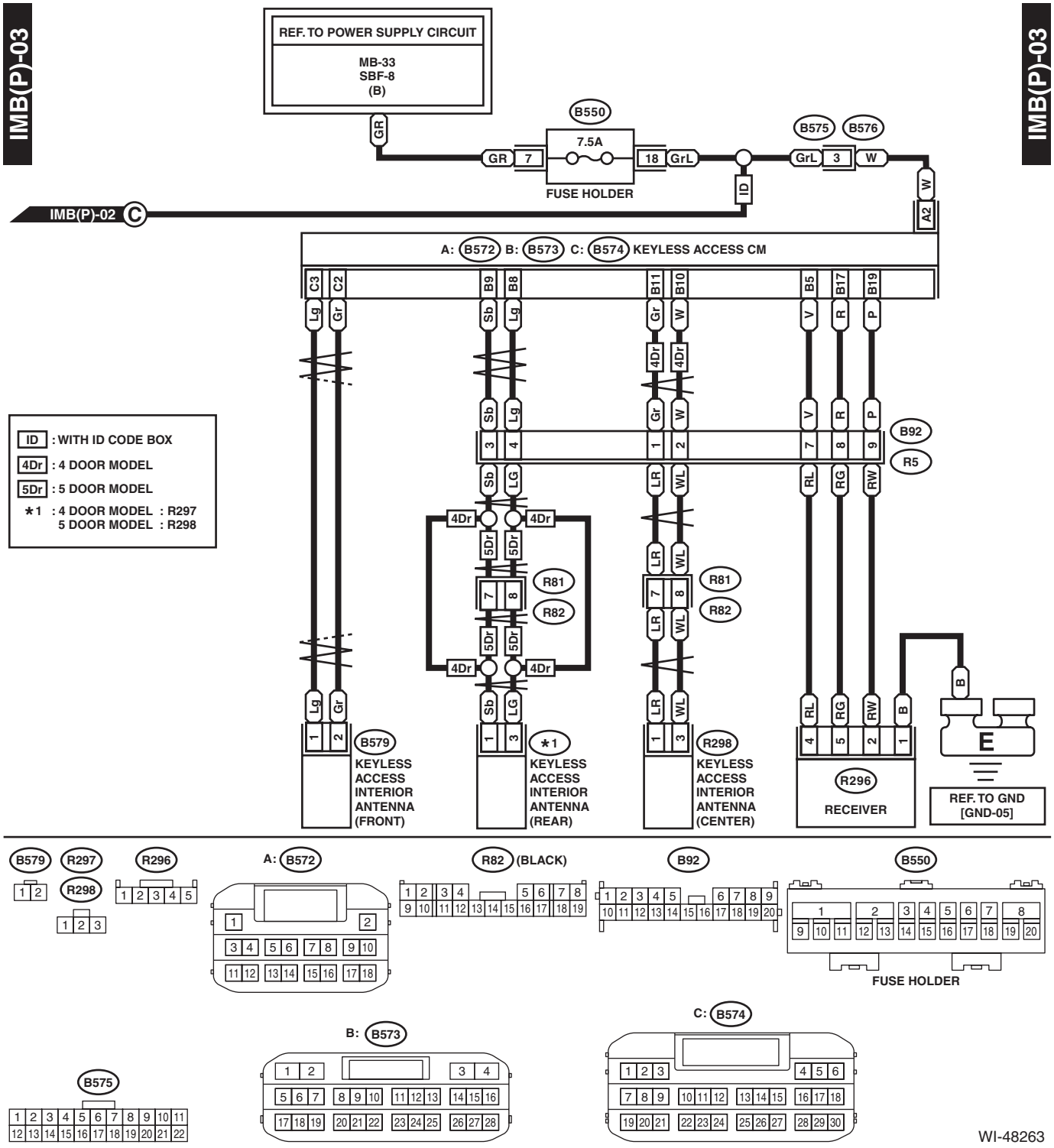
IMB(P)-03
IMB(P)-03
REF. TO POWER SUPPLY CIRCUIT
MB-33
SBF-8
(B)
B550
7.5A
FUSE HOLDER
B575
B576
GR
GR 7
18 GrL
GrL 3 W
ID
W
A2
IMB(P)-02 C
A: B572 B: B573 C: B574 KEYLESS ACCESS CM
C3 C2 B9 B8 B11 B10 B5 B17 B19
Lg Gr Sb Lg Gr W V R P
4Dr
3 4 1 2 7 8 9
B92
R5
Sb LG LR WL RL RG RW
4Dr 5Dr R81 R82
B
E
1 2 B579 KEYLESS ACCESS INTERIOR ANTENNA (FRONT)
1 3 *1 KEYLESS ACCESS INTERIOR ANTENNA (REAR)
1 3 R298 KEYLESS ACCESS INTERIOR ANTENNA (CENTER)
4 5 2 1 R296 RECEIVER
REF. TO GND [GND-05]
ID : WITH ID CODE BOX
4Dr : 4 DOOR MODEL
5Dr : 5 DOOR MODEL
*1 : 4 DOOR MODEL : R297
5 DOOR MODEL : R298
B579 R297 R298 R296
A: B572
R82 (BLACK)
B92
B550
FUSE HOLDER
B575
B: B573
C: B574
WI-48263

27.Interior Light System

A: WIRING DIAGRAM

1. WITHOUT EyeSight

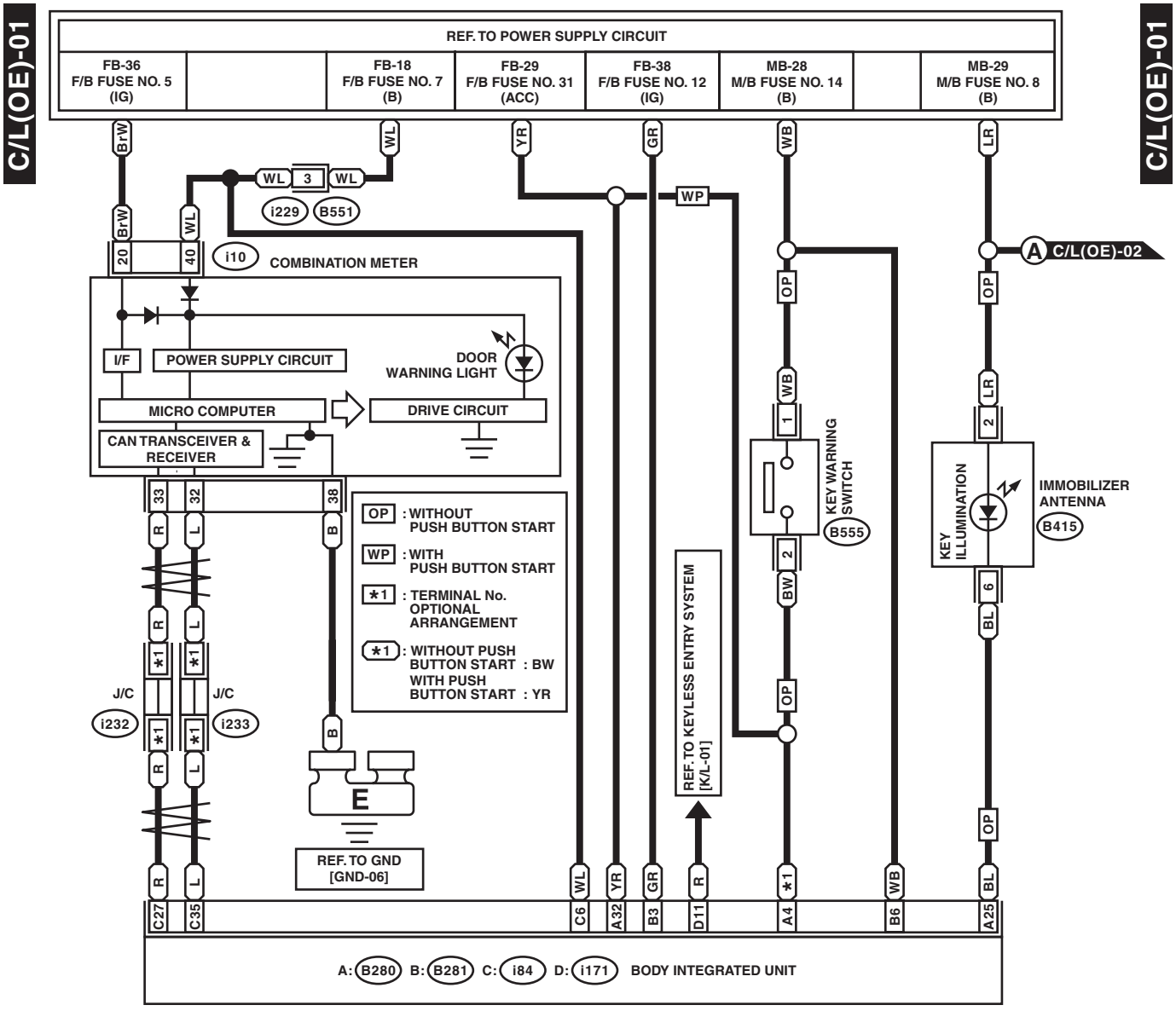

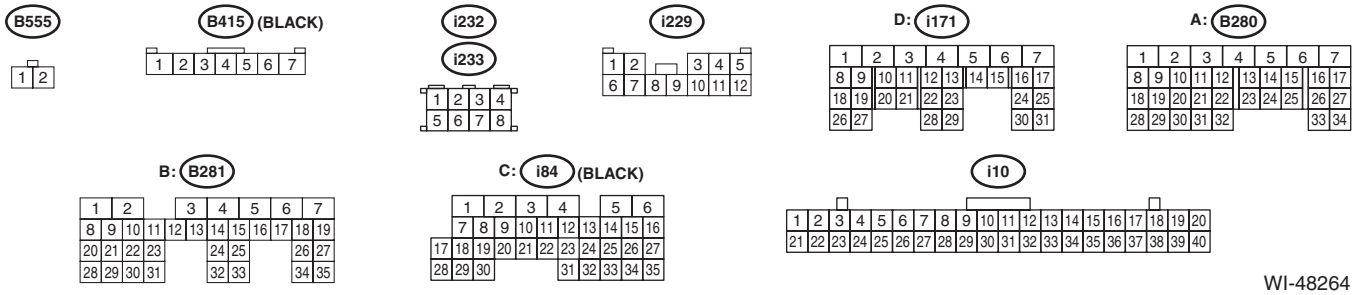

WI-48264

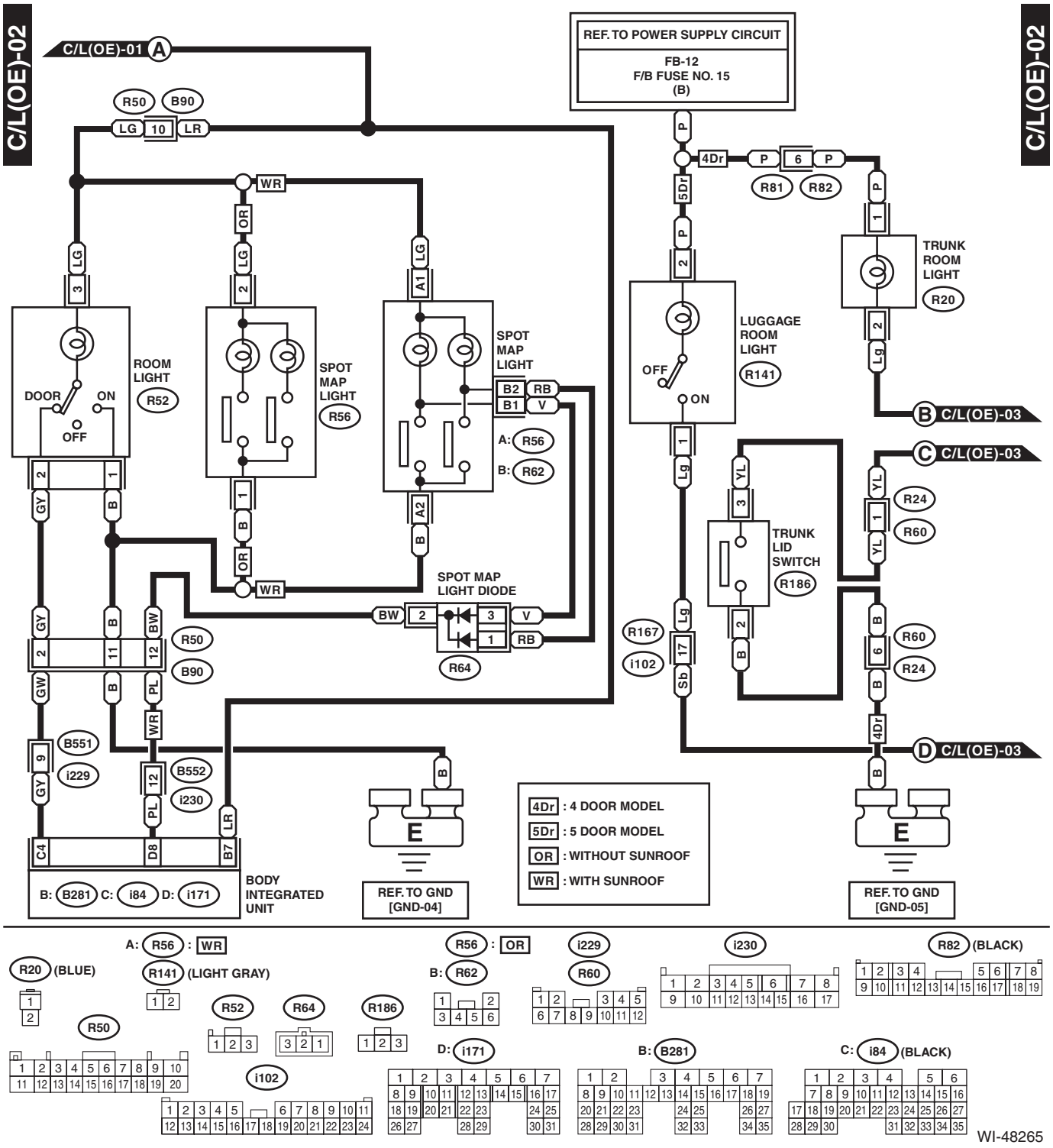
C/L(OE)-02
C/L(OE)-01 A
REF. TO POWER SUPPLY CIRCUIT
FB-12
F/B FUSE NO. 15
(B)
R50
B90
LG
10
LR
WR
OR
LG
3
2
A1
ROOM LIGHT
R52
DOOR
ON
OFF
SPOT MAP LIGHT
R56
SPOT MAP LIGHT
B2
RB
B1
V
A: R56
B: R62
A2
GY
B
SPOT MAP LIGHT DIODE
BW
V
RB
R64
GW
PL
B551
i229
B552
i230
C4
D8
B7
BODY INTEGRATED UNIT
B: B281 C: i84 D: i171
E
REF. TO GND [GND-04]
4Dr : 4 DOOR MODEL
5Dr : 5 DOOR MODEL
OR : WITHOUT SUNROOF
WR : WITH SUNROOF
P
4Dr
6
R81
R82
5Dr
TRUNK ROOM LIGHT
R20
LUGGAGE ROOM LIGHT
R141
OFF
ON
Lg
B C/L(OE)-03
C C/L(OE)-03
YL
R24
R60
TRUNK LID SWITCH
R186
R167
i102
17
Sb
4Dr
D C/L(OE)-03
REF. TO GND [GND-05]
A: R56 : WR
R20 (BLUE)
R141 (LIGHT GRAY)
R56 : OR
B: R62
i229
R60
i230
R82 (BLACK)
R50
R52
R64
R186
i102
D: i171
B: B281
C: i84 (BLACK)
WI-48265

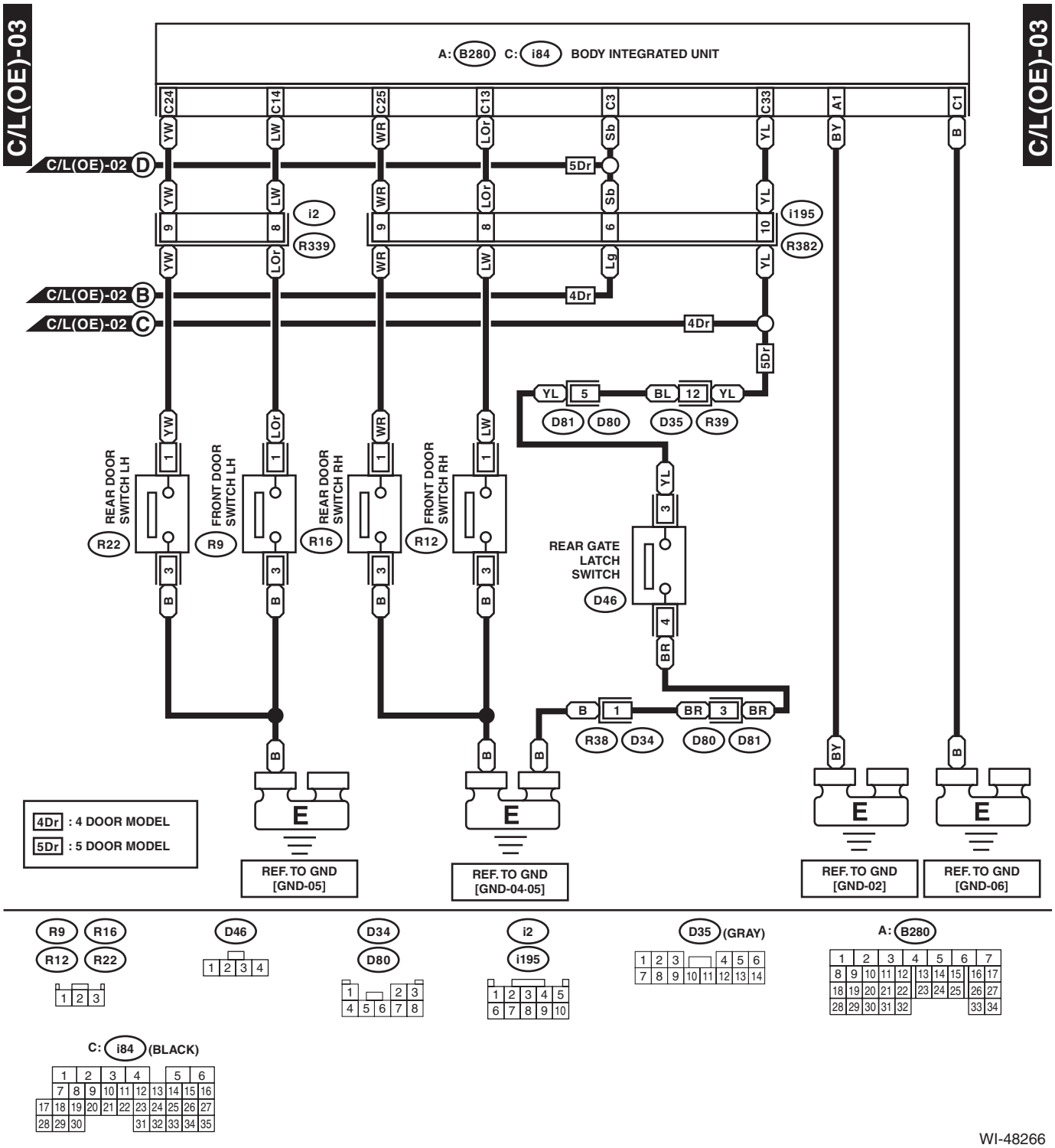
C/L(OE)-03
C/L(OE)-03
A: B280 C: i84 BODY INTEGRATED UNIT
C24
C14
C25
C13
C3
C33
A1
C1
YW
LW
WR
LOr
Sb
YL
BY
B
C/L(OE)-02 D
5Dr
i2
R339
i195
R382
Lg
C/L(OE)-02 B
4Dr
C/L(OE)-02 C
4Dr
5Dr
YL
5
BL
12
YL
D81
D80
D35
R39
REAR DOOR SWITCH LH
FRONT DOOR SWITCH LH
REAR DOOR SWITCH RH
FRONT DOOR SWITCH RH
R22
R9
R16
R12
REAR GATE LATCH SWITCH
D46
BR
B
1
BR
3
BR
R38
D34
D80
D81
E
REF. TO GND [GND-05]
REF. TO GND [GND-04·05]
REF. TO GND [GND-02]
REF. TO GND [GND-06]
4Dr : 4 DOOR MODEL
5Dr : 5 DOOR MODEL

R9
R16
R12
R22
D46
D34
D80
i2
i195
D35 (GRAY)
A: B280
C: i84 (BLACK)

WI-48266

2. WITH EyeSight

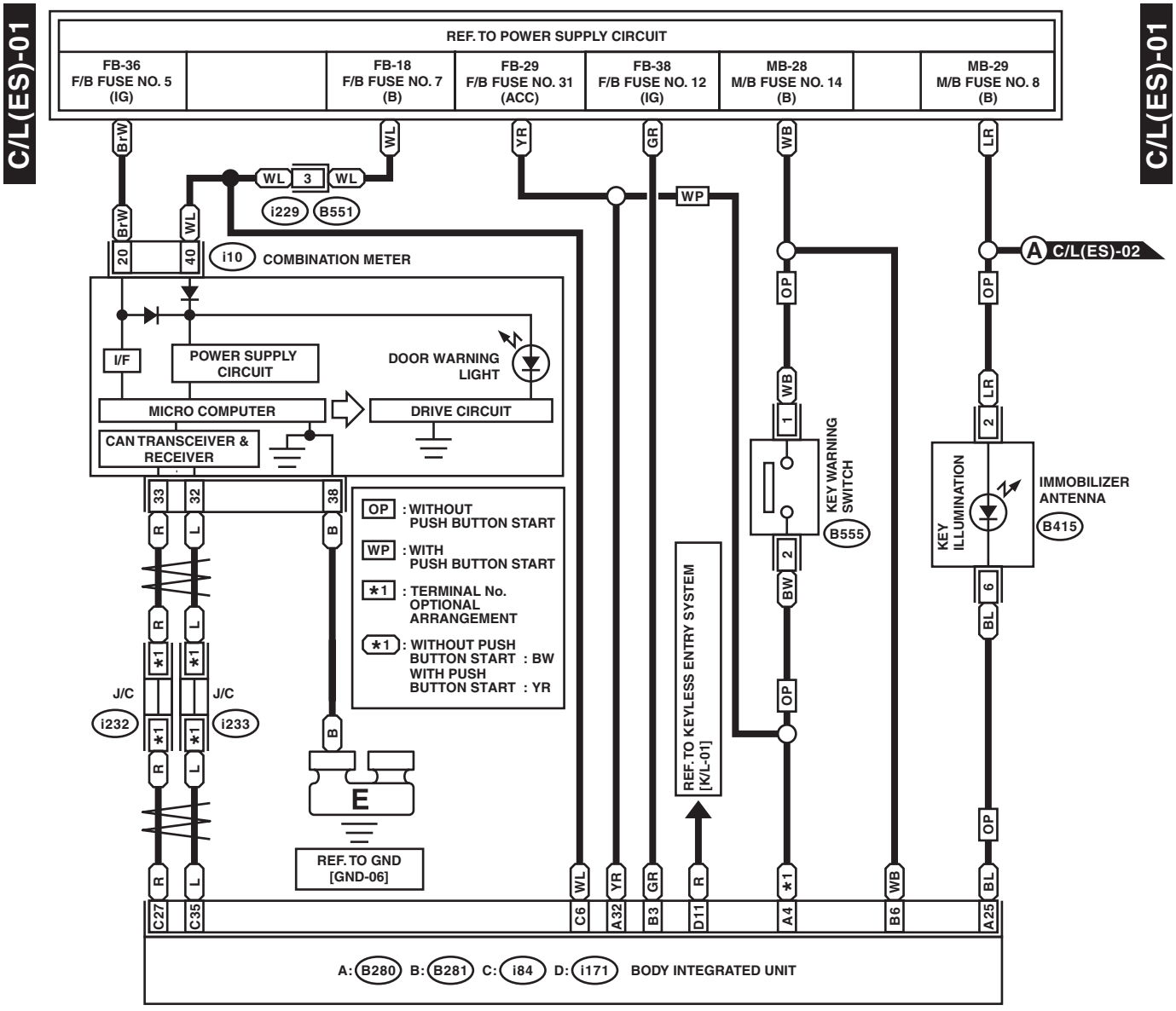

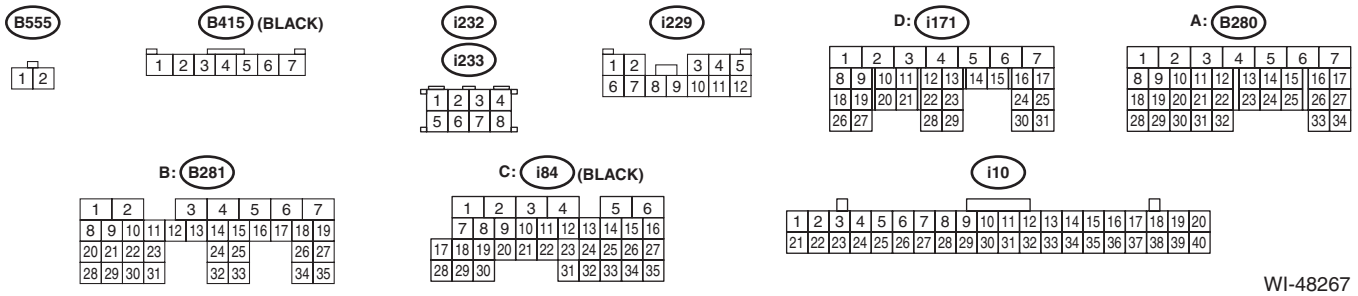

WI-48267

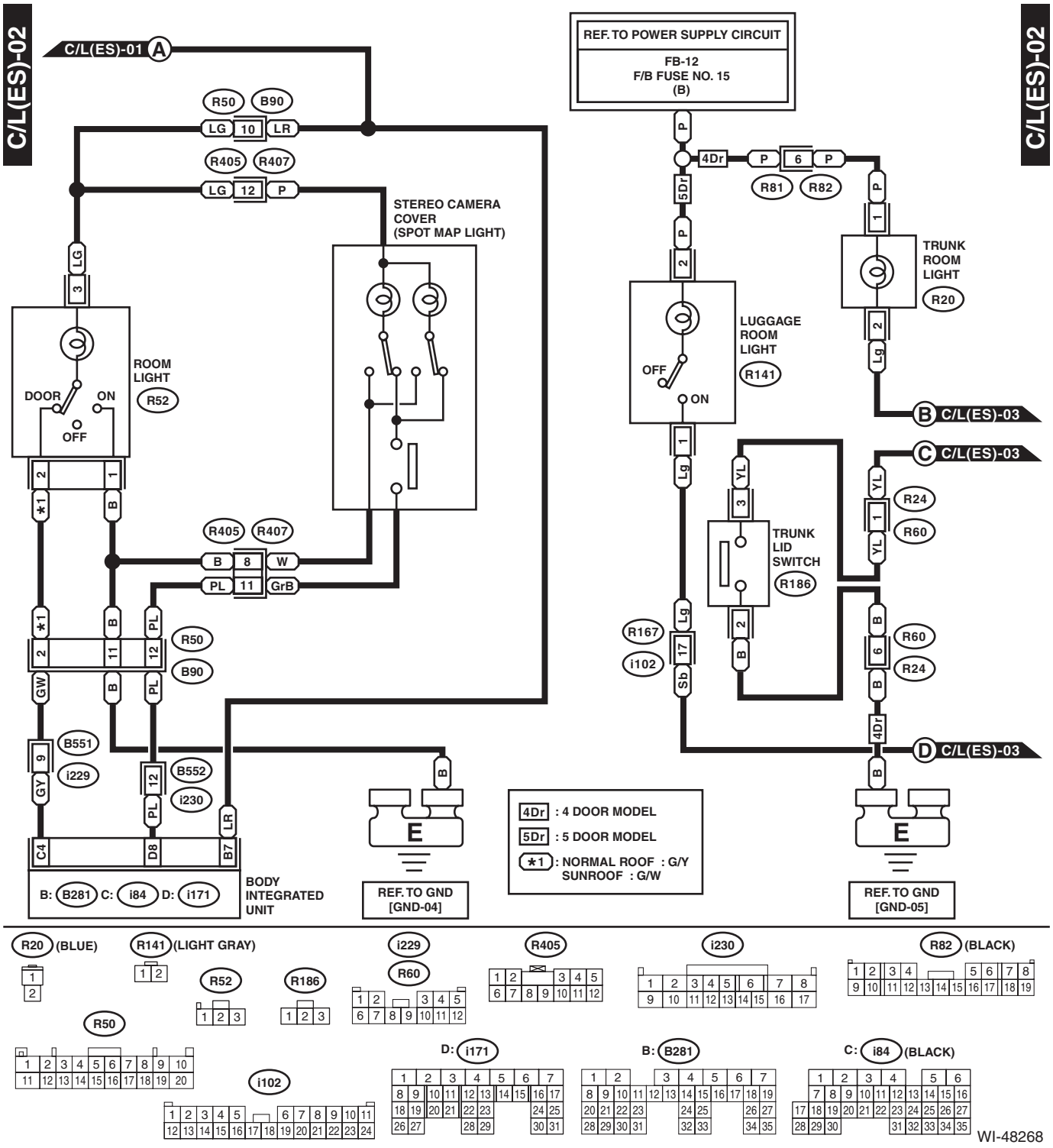
C/L(ES)-02
C/L(ES)-01 A
REF. TO POWER SUPPLY CIRCUIT
FB-12
F/B FUSE NO. 15
(B)
R50
B90
LG
10
LR
R405
R407
LG
12
P
STEREO CAMERA
COVER
(SPOT MAP LIGHT)
LG
3
ROOM
LIGHT
R52
DOOR
ON
OFF
2
1
*1
B
R405
R407
B
8
W
PL
11
GrB
*1
B
PL
2
11
12
R50
B90
GW
B
PL
B551
9
i229
GY
12
B552
i230
PL
LR
C4
D8
B7
B: B281 C: i84 D: i171
BODY
INTEGRATED
UNIT
B
E
REF. TO GND
[GND-04]
4Dr : 4 DOOR MODEL
5Dr : 5 DOOR MODEL
*1 : NORMAL ROOF : G/Y
SUNROOF : G/W
P
4Dr
P
6
P
R81
R82
5Dr
P
2
P
1
TRUNK
ROOM
LIGHT
R20
2
Lg
B C/L(ES)-03
LUGGAGE
ROOM
LIGHT
R141
OFF
ON
1
Lg
C C/L(ES)-03
YL
3
TRUNK
LID
SWITCH
R186
YL
R24
1
R60
YL
R167
Lg
i102
17
Sb
2
B
B
R60
6
R24
B
4Dr
D C/L(ES)-03
B
E
REF. TO GND
[GND-05]
C/L(ES)-02
R20 (BLUE)
R141 (LIGHT GRAY)
R52
R186
i229
R60
R405
i230
R82 (BLACK)
R50
i102
D: i171
B: B281
C: i84 (BLACK)
WI-48268

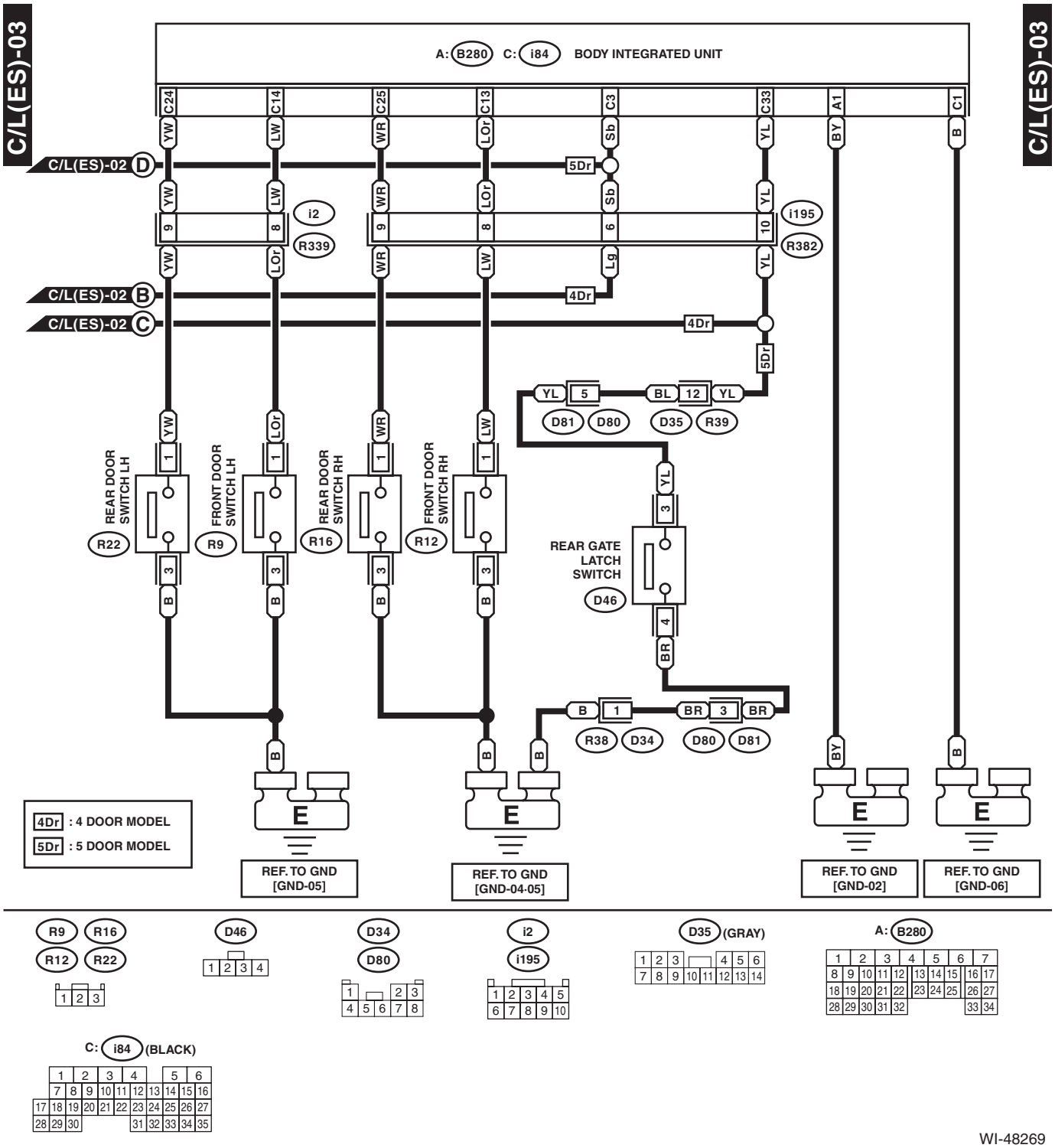
C/L(ES)-03
C/L(ES)-03
A: B280 C: i84 BODY INTEGRATED UNIT
C24
C14
C25
C13
C3
C33
A1
C1
YW
LW
WR
LOr
Sb
YL
BY
B
C/L(ES)-02 D
C/L(ES)-02 B
C/L(ES)-02 C
5Dr
4Dr
i2
R339
i195
R382
9
8
6
10
Lg
YL 5 BL 12 YL
D81 D80 D35 R39
REAR DOOR SWITCH LH
FRONT DOOR SWITCH LH
REAR DOOR SWITCH RH
FRONT DOOR SWITCH RH
R22
R9
R16
R12
1
3
REAR GATE LATCH SWITCH
D46
4
BR
B 1 BR 3 BR
R38 D34 D80 D81
E
REF. TO GND [GND-05]
REF. TO GND [GND-04·05]
REF. TO GND [GND-02]
REF. TO GND [GND-06]
4Dr : 4 DOOR MODEL
5Dr : 5 DOOR MODEL
R9 R16 R12 R22
D46
D34 D80
i2 i195
D35 (GRAY)
A: B280
C: i84 (BLACK)

WI-48269

28.Keyless Access System

A: WIRING DIAGRAM

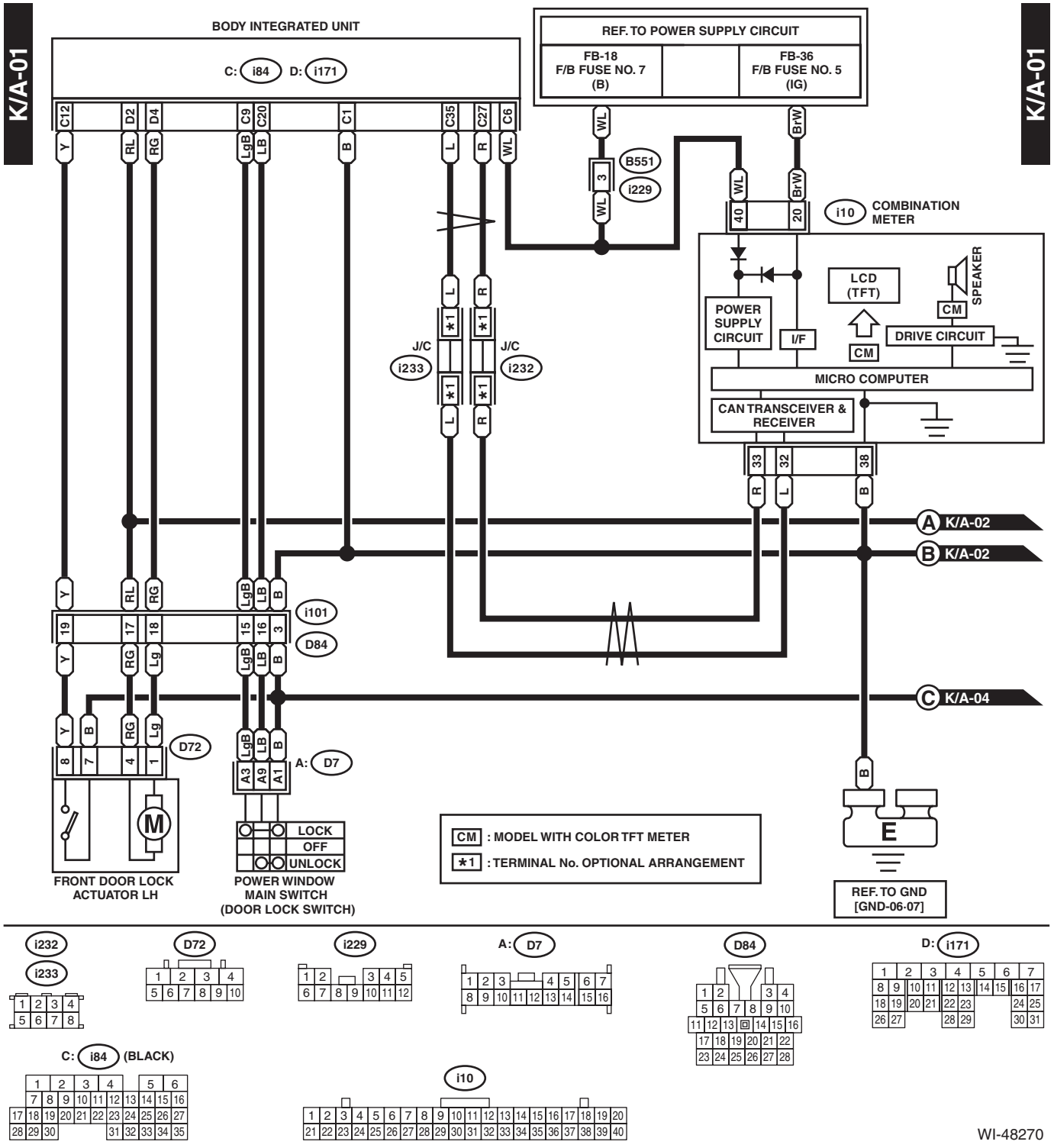

WIRING SYSTEM

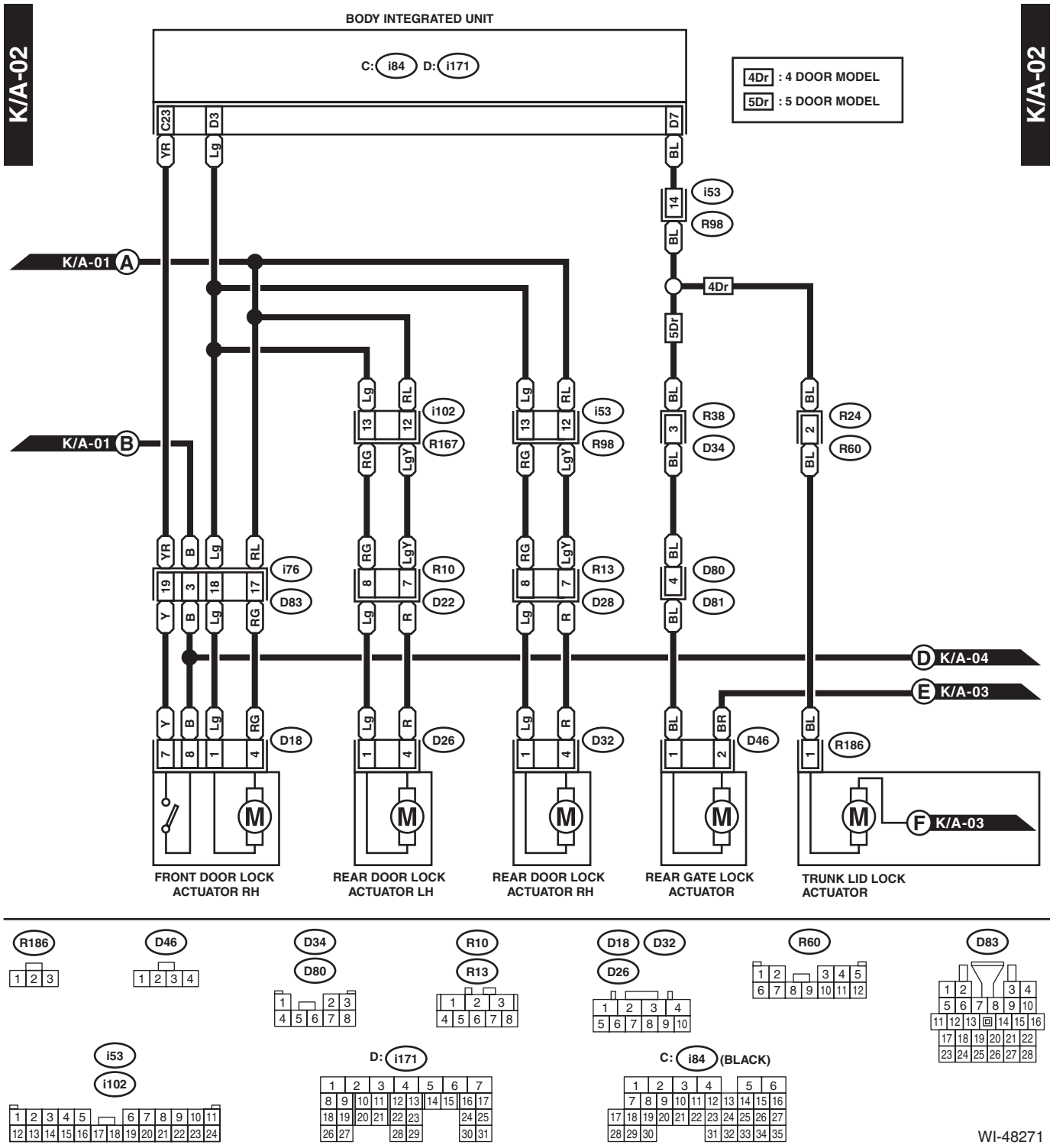

WI-48271

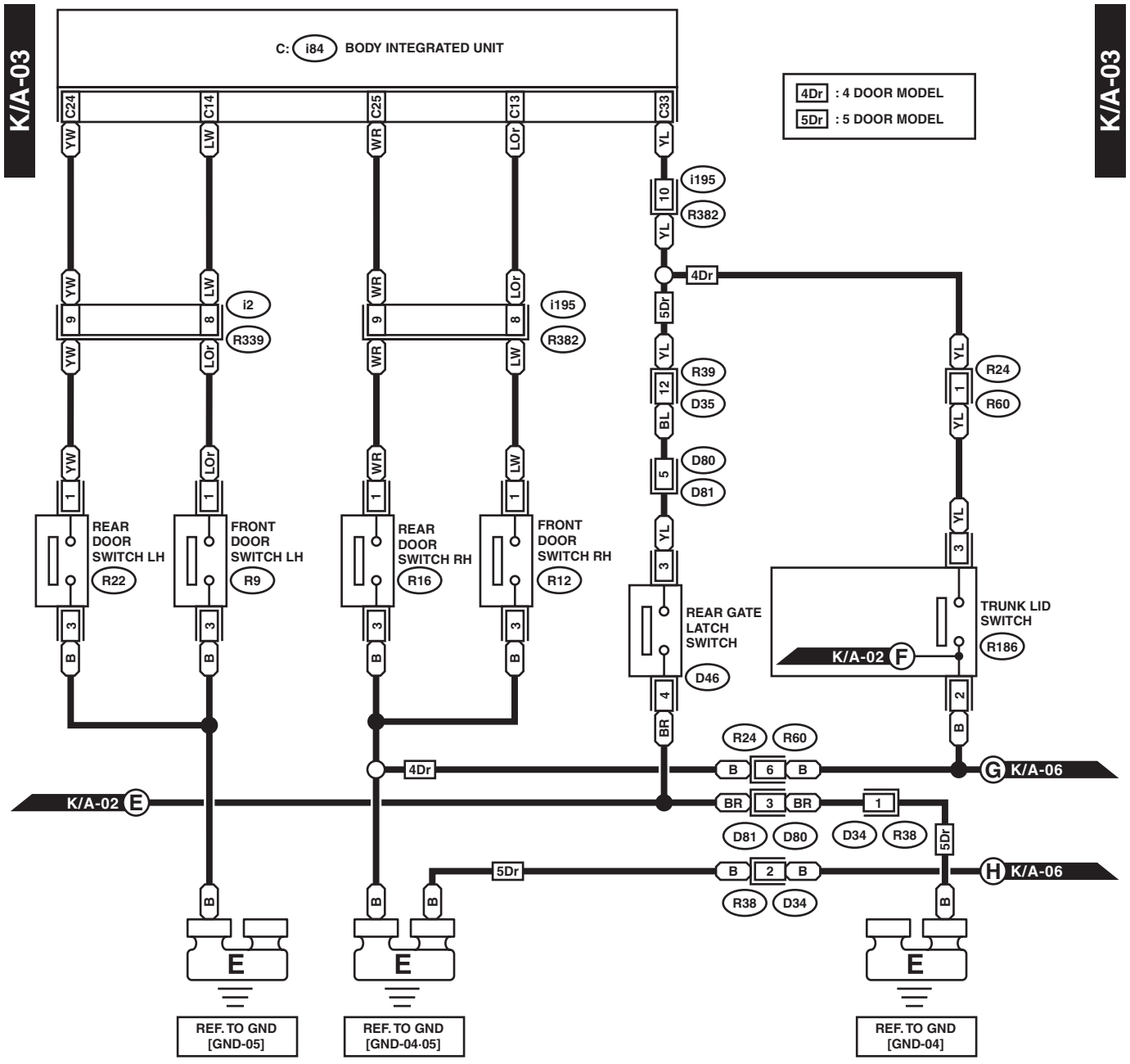
K/A-03
K/A-03
C: i84 BODY INTEGRATED UNIT
4Dr : 4 DOOR MODEL
5Dr : 5 DOOR MODEL
C24
C14
C25
C13
C33
i195
R382
i2
R339
REAR DOOR SWITCH LH
R22
FRONT DOOR SWITCH LH
R9
REAR DOOR SWITCH RH
R16
FRONT DOOR SWITCH RH
R12
R39
D35
D80
D81
REAR GATE LATCH SWITCH
D46
R24
R60
TRUNK LID SWITCH
R186
K/A-02 F
K/A-02 E
G K/A-06
H K/A-06
D34
R38
REF. TO GND [GND-05]
REF. TO GND [GND-04·05]
REF. TO GND [GND-04]
R9
R16
R12
R22
R186
D46
D34
D80
i2
i195
R60
D35 (GRAY)
C: i84 (BLACK)

WI-48272

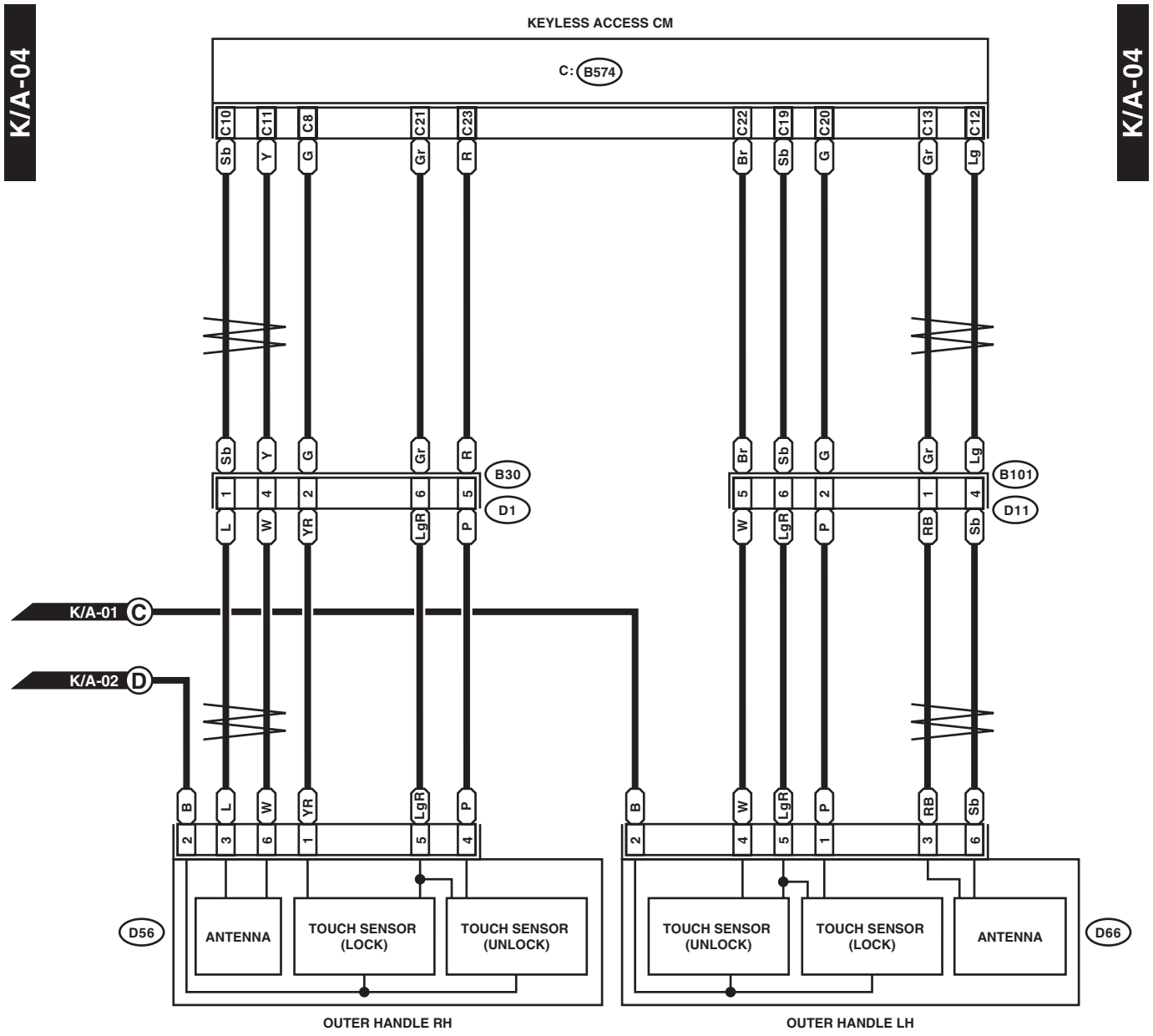
K/A-04
K/A-04
KEYLESS ACCESS CM
C: B574
C10
C11
C8
C21
C23
C22
C19
C20
C13
C12
Sb
Y
G
Gr
R
Br
Sb
G
Gr
Lg
B30
D1
B101
D11
L
W
YR
LgR
P
W
LgR
P
RB
Sb
K/A-01 C
K/A-02 D
B
L
W
YR
LgR
P
B
W
LgR
P
RB
Sb
2
3
6
1
5
4
2
4
5
1
3
6
D56
ANTENNA
TOUCH SENSOR (LOCK)
TOUCH SENSOR (UNLOCK)
TOUCH SENSOR (UNLOCK)
TOUCH SENSOR (LOCK)
ANTENNA
D66
OUTER HANDLE RH
OUTER HANDLE LH

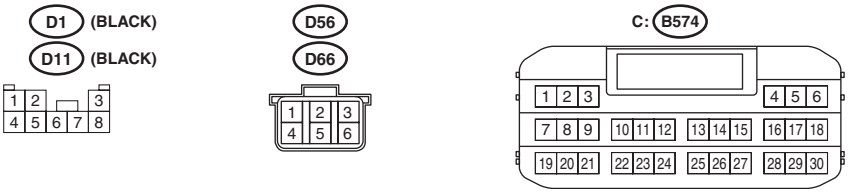
D1 (BLACK)
D11 (BLACK)
D56
D66
C: B574

WI-48273

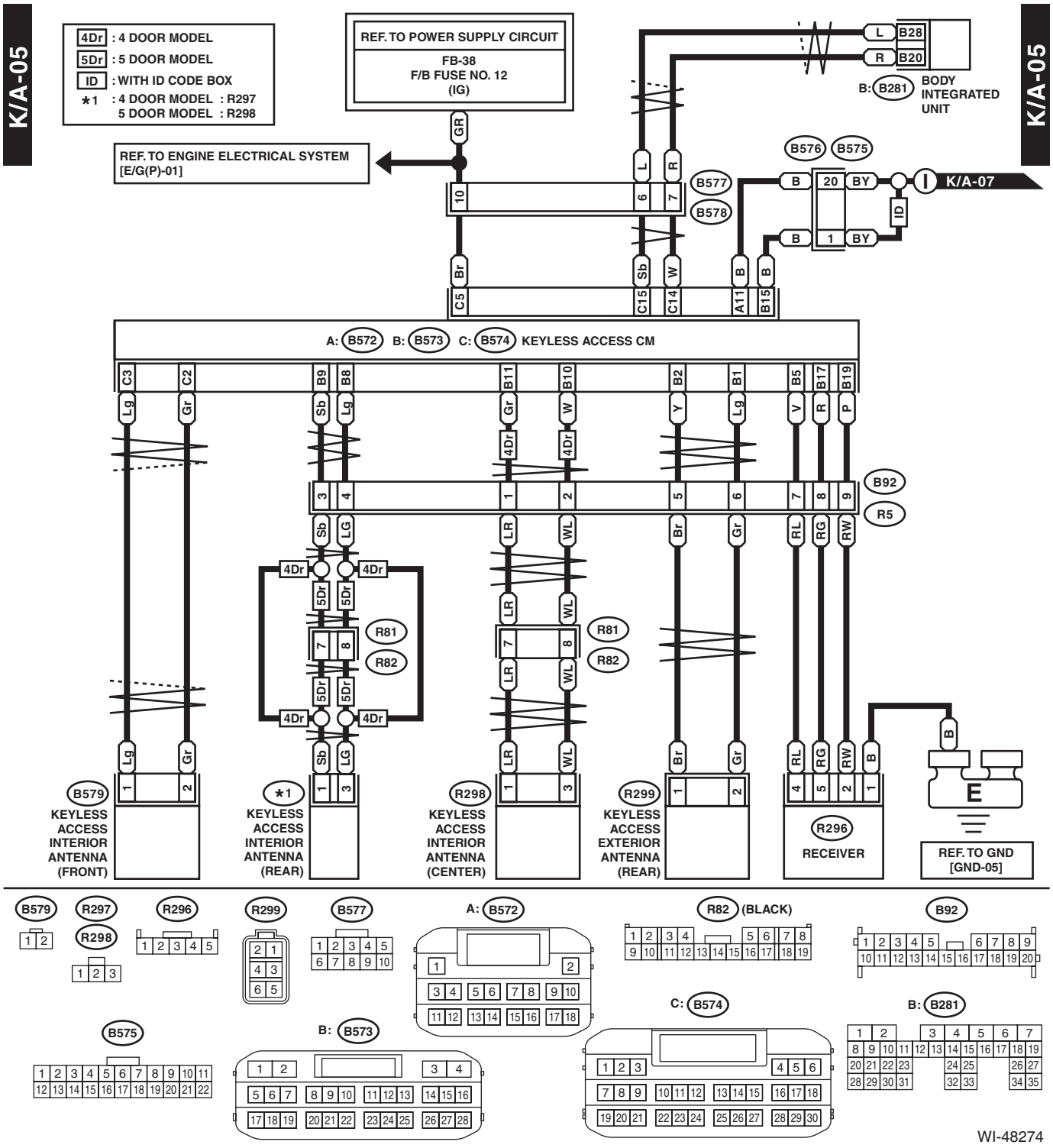
K/A-05
4Dr : 4 DOOR MODEL
5Dr : 5 DOOR MODEL
ID : WITH ID CODE BOX
*1 : 4 DOOR MODEL : R297
5 DOOR MODEL : R298
REF. TO POWER SUPPLY CIRCUIT
FB-38
F/B FUSE NO. 12
(IG)
REF. TO ENGINE ELECTRICAL SYSTEM
[E/G(P)-01]
B: B281 BODY INTEGRATED UNIT
B576 B575
B577
B578
K/A-07
A: B572 B: B573 C: B574 KEYLESS ACCESS CM
B92
R5
R81
R82
B579 KEYLESS ACCESS INTERIOR ANTENNA (FRONT)
*1 KEYLESS ACCESS INTERIOR ANTENNA (REAR)
R298 KEYLESS ACCESS INTERIOR ANTENNA (CENTER)
R299 KEYLESS ACCESS EXTERIOR ANTENNA (REAR)
R296 RECEIVER
REF. TO GND [GND-05]
R82 (BLACK)
WI-48274

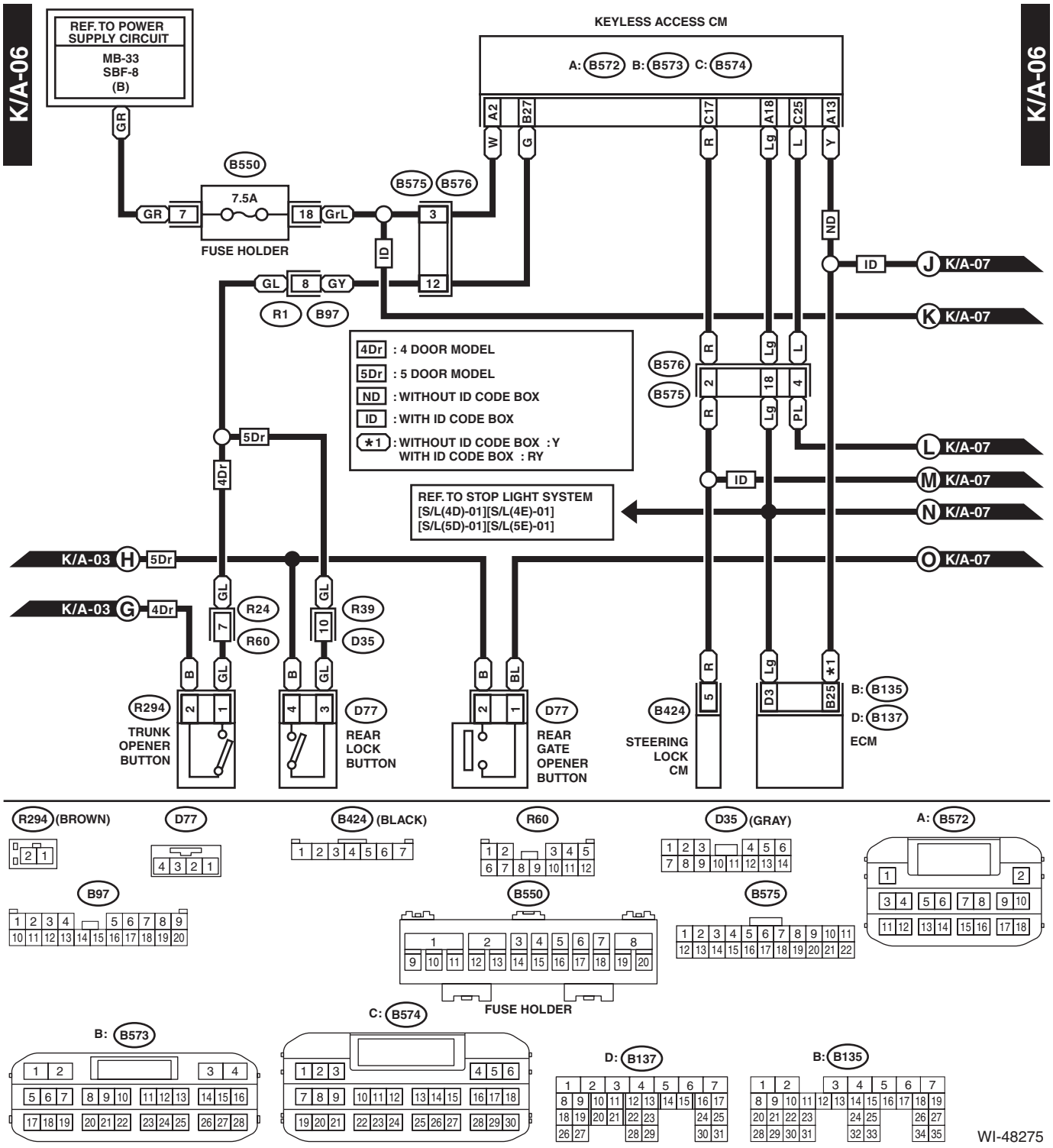
K/A-06
K/A-06
REF. TO POWER SUPPLY CIRCUIT
MB-33
SBF-8
(B)
KEYLESS ACCESS CM
A: B572 B: B573 C: B574
A2
B27
C17
A18
C25
A13
W
G
R
Lg
L
Y
GR
B550
7.5A
GR 7
18 GrL
FUSE HOLDER
B575 B576
3
12
ID
ND
GL 8 GY
R1 B97
4Dr : 4 DOOR MODEL
5Dr : 5 DOOR MODEL
ND : WITHOUT ID CODE BOX
ID : WITH ID CODE BOX
*1 : WITHOUT ID CODE BOX : Y
WITH ID CODE BOX : RY
B576
B575
2
18
4
PL
5Dr
4Dr
REF. TO STOP LIGHT SYSTEM
[S/L(4D)-01][S/L(4E)-01]
[S/L(5D)-01][S/L(5E)-01]
J K/A-07
K K/A-07
L K/A-07
M K/A-07
N K/A-07
O K/A-07
K/A-03 H 5Dr
K/A-03 G 4Dr
R24
R60
R39
D35
7
10
B
GL
BL
R294
TRUNK OPENER BUTTON
D77
REAR LOCK BUTTON
REAR GATE OPENER BUTTON
B424
STEERING LOCK CM
D3
B25
*1
B: B135
D: B137
ECM
R294 (BROWN)
D77
B424 (BLACK)
R60
D35 (GRAY)
A: B572
B97
B550
B575
FUSE HOLDER
B: B573
C: B574
D: B137
B: B135
WI-48275

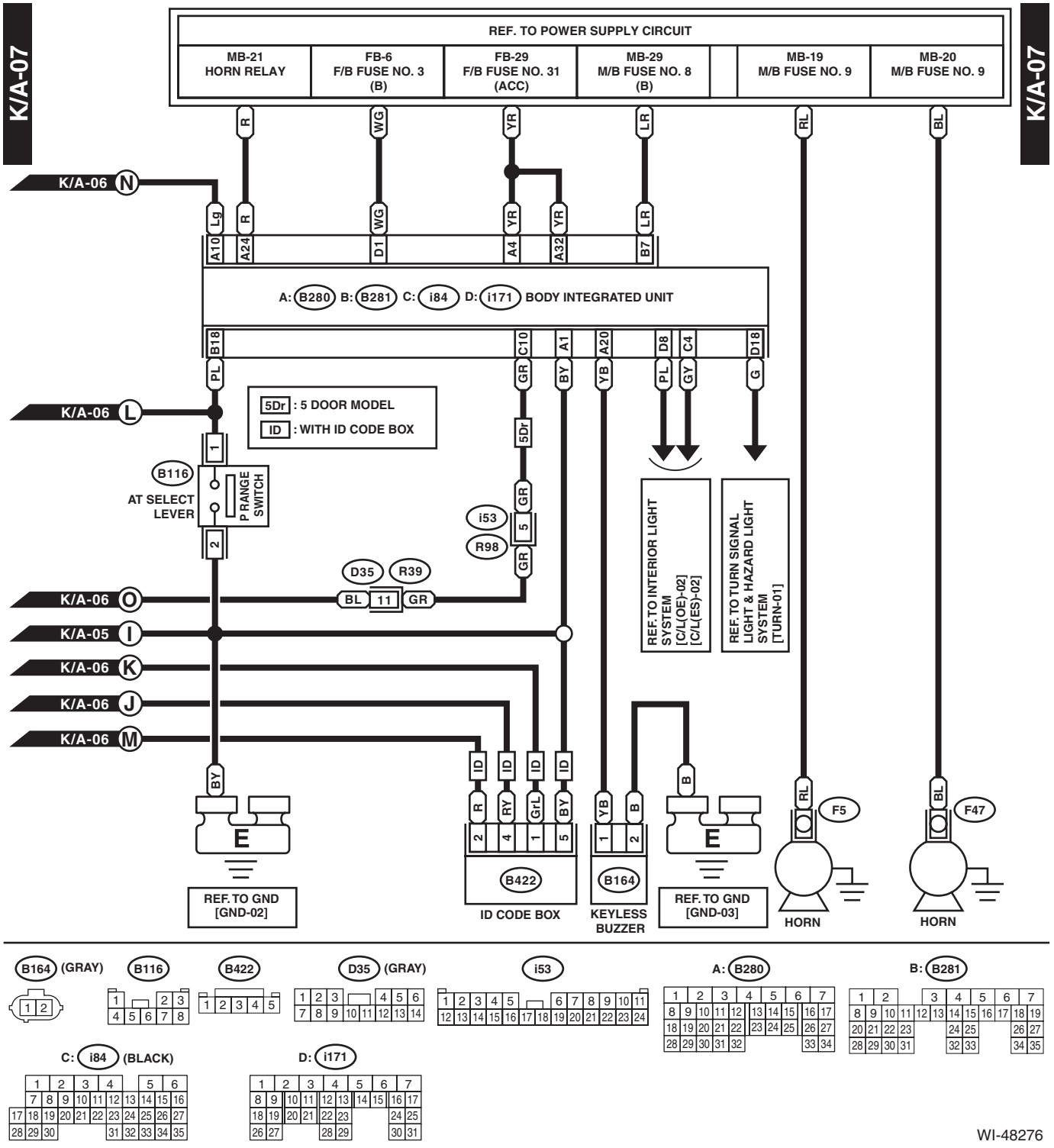
K/A-07
K/A-07
REF. TO POWER SUPPLY CIRCUIT
MB-21 HORN RELAY
FB-6 F/B FUSE NO. 3 (B)
FB-29 F/B FUSE NO. 31 (ACC)
MB-29 M/B FUSE NO. 8 (B)
MB-19 M/B FUSE NO. 9
MB-20 M/B FUSE NO. 9
R
WG
YR
LR
RL
BL
K/A-06 N
Lg
A10
A24
D1
A4
A32
B7
A: B280 B: B281 C: i84 D: i171 BODY INTEGRATED UNIT
B18
C10
A1
A20
D8
C4
D18
PL
GR
BY
YB
PL
GY
G
K/A-06 L
5Dr : 5 DOOR MODEL
ID : WITH ID CODE BOX
B116
AT SELECT LEVER
P RANGE SWITCH
i53
R98
D35
R39
K/A-06 O
K/A-05 I
K/A-06 K
K/A-06 J
K/A-06 M
BL
11
REF.TO INTERIOR LIGHT SYSTEM [C/L(OE)-02] [C/L(ES)-02]
REF. TO TURN SIGNAL LIGHT & HAZARD LIGHT SYSTEM [TURN-01]
ID
R
RY
GrL
B
F5
F47
B422
B164
REF. TO GND [GND-02]
ID CODE BOX
KEYLESS BUZZER
REF. TO GND [GND-03]
HORN
HORN

B164 (GRAY)
B116
B422
D35 (GRAY)
i53
A: B280
B: B281
C: i84 (BLACK)
D: i171

WI-48276

29.Keyless Entry System

A: WIRING DIAGRAM

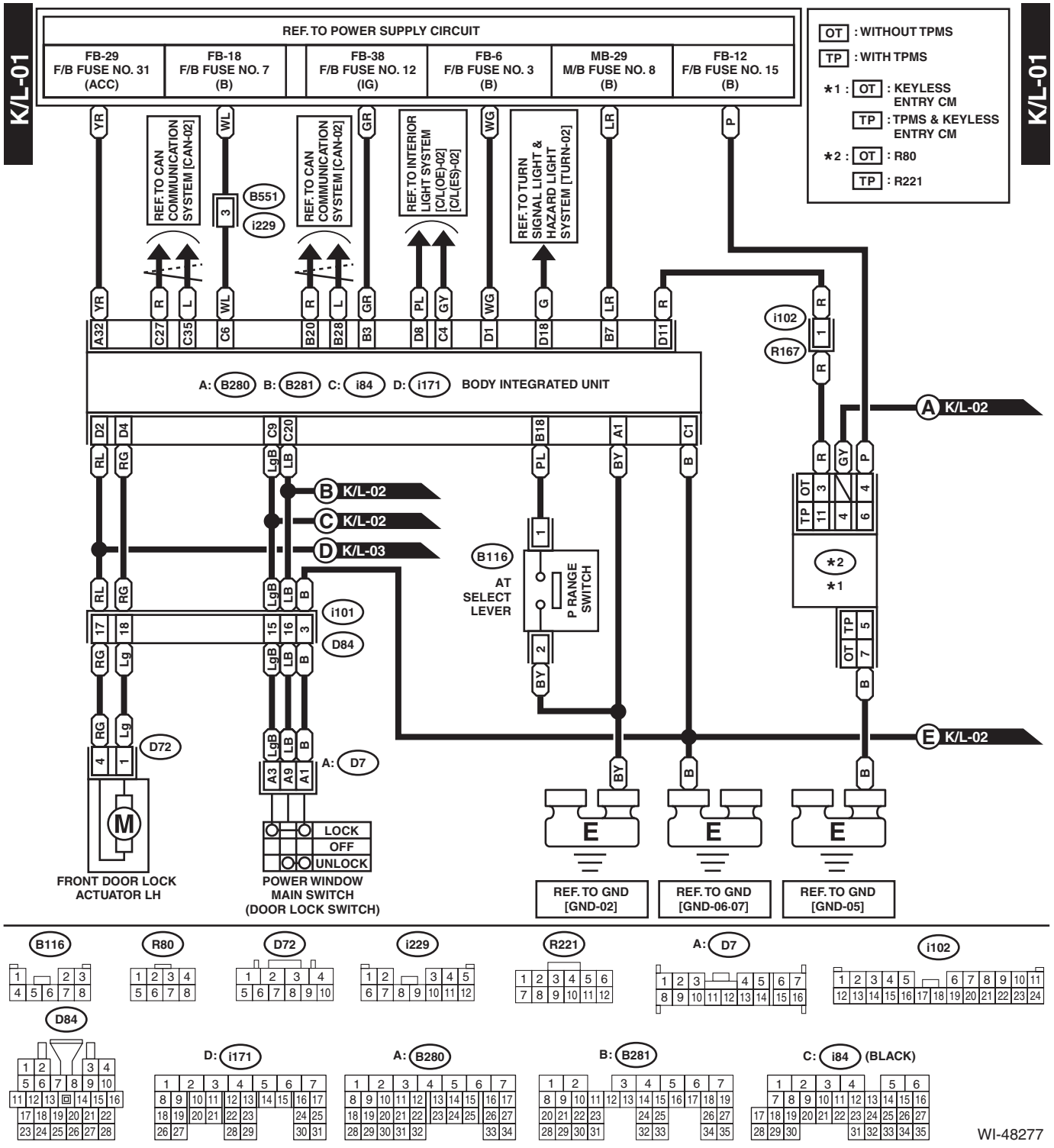

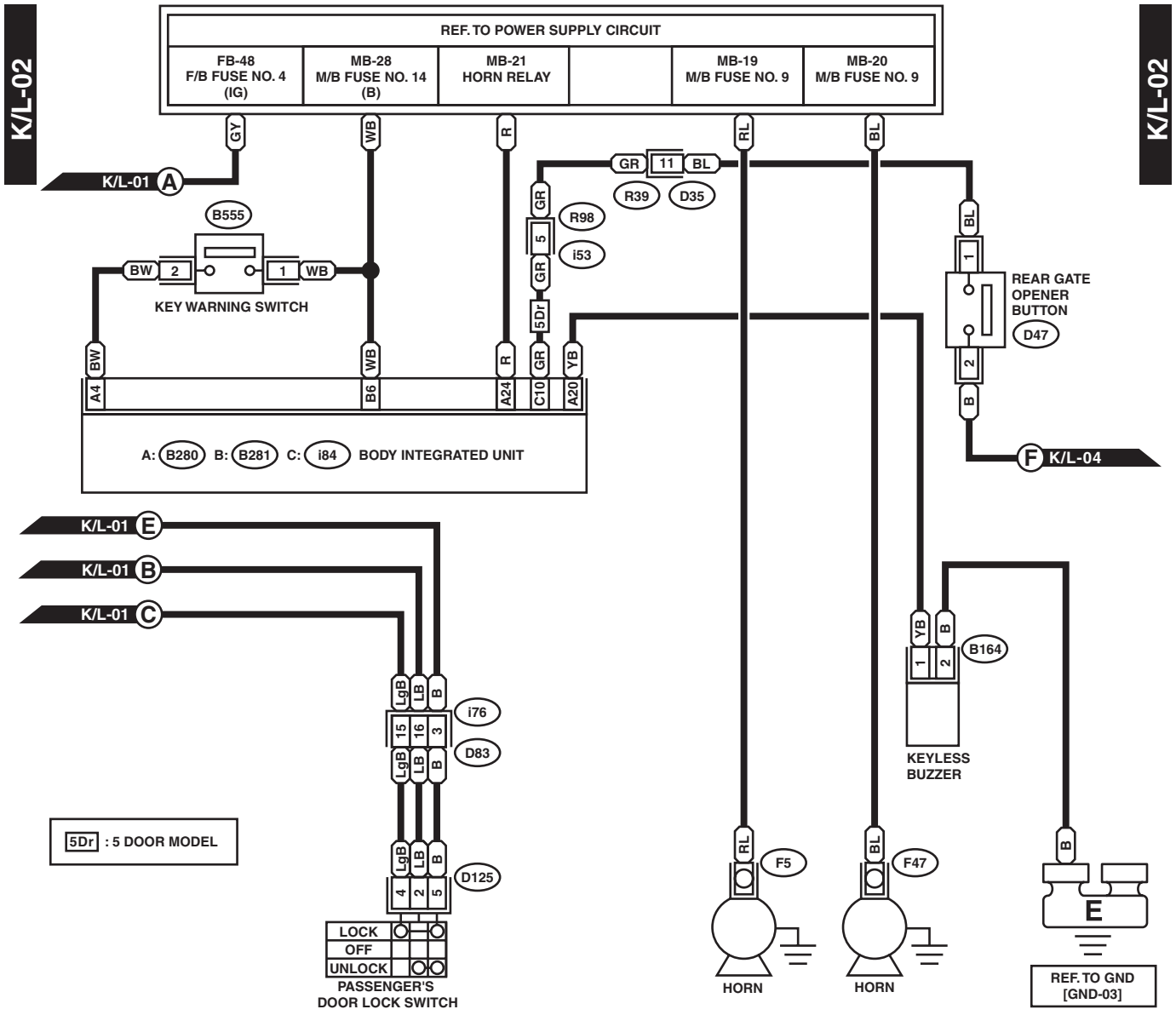
K/L-02
K/L-02
REF. TO POWER SUPPLY CIRCUIT
FB-48 F/B FUSE NO. 4 (IG)
MB-28 M/B FUSE NO. 14 (B)
MB-21 HORN RELAY
MB-19 M/B FUSE NO. 9
MB-20 M/B FUSE NO. 9
K/L-01 A
B555
KEY WARNING SWITCH
R98
i53
5Dr
REAR GATE OPENER BUTTON
D47
F K/L-04
A: B280 B: B281 C: i84 BODY INTEGRATED UNIT
K/L-01 E
K/L-01 B
K/L-01 C
i76
D83
D125
5Dr : 5 DOOR MODEL
LOCK
OFF
UNLOCK
PASSENGER'S DOOR LOCK SWITCH
B164
KEYLESS BUZZER
F5
F47
HORN
HORN
REF. TO GND [GND-03]

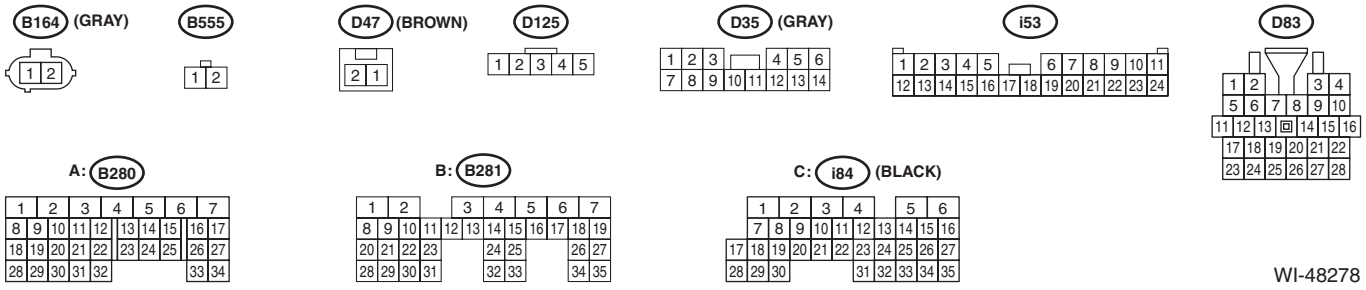
B164 (GRAY)
B555
D47 (BROWN)
D125
D35 (GRAY)
i53
D83
A: B280
B: B281
C: i84 (BLACK)

WI-48278

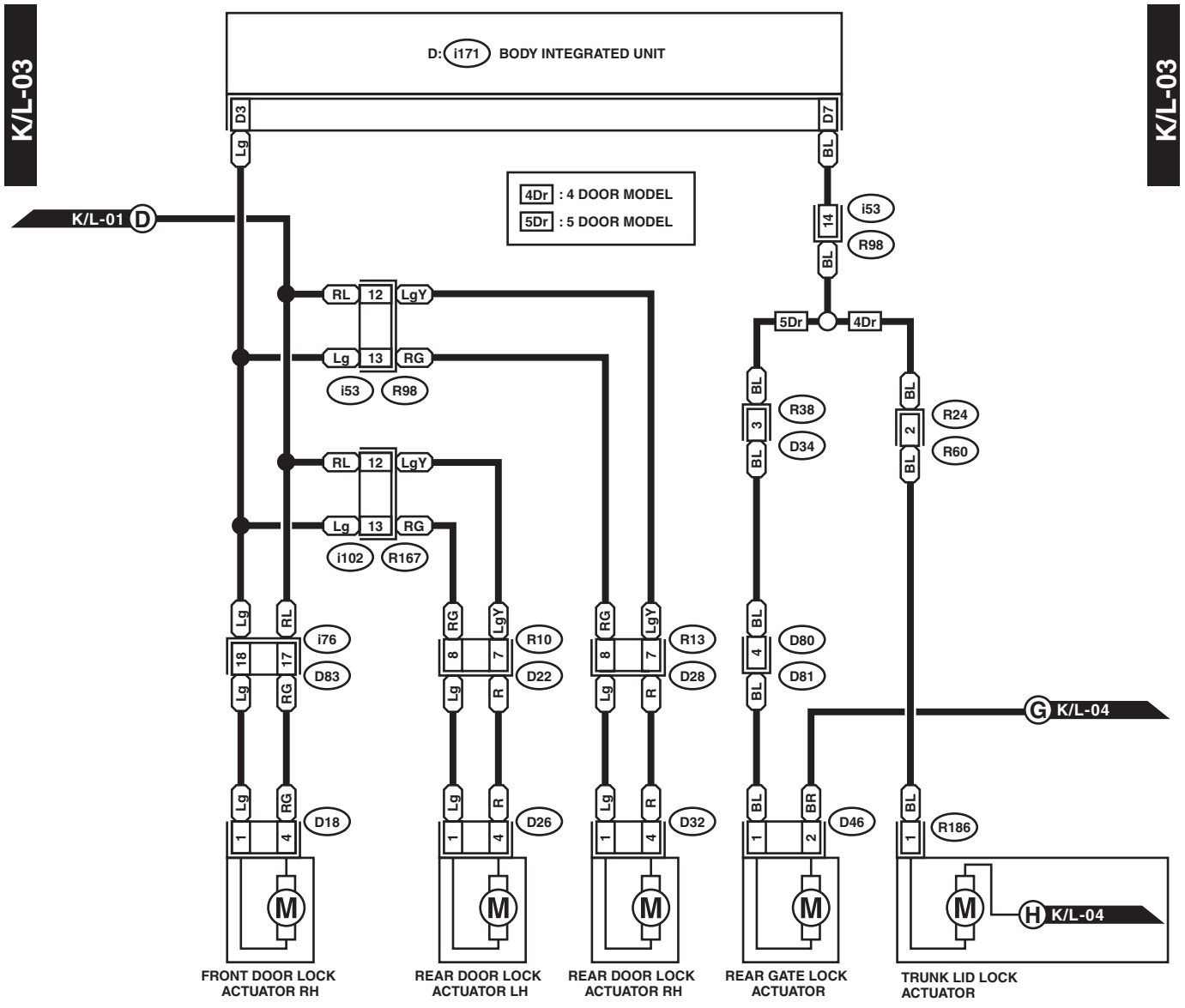
K/L-03
K/L-03
D: i171 BODY INTEGRATED UNIT
D3
D7
Lg
BL
4Dr : 4 DOOR MODEL
5Dr : 5 DOOR MODEL
K/L-01 D
14
i53
R98
BL
5Dr
4Dr
RL 12 LgY
Lg 13 RG
i53 R98
RL 12 LgY
Lg 13 RG
i102 R167
BL 3 R38 D34 BL
BL 2 R24 R60 BL
Lg RL 18 17 i76 D83 Lg RG
RG LgY 8 7 R10 D22 Lg R
RG LgY 8 7 R13 D28 Lg R
BL 4 D80 D81 BL
G K/L-04
Lg RG 1 4 D18
Lg R 1 4 D26
Lg R 1 4 D32
BL BR 1 2 D46
BL 1 R186
M
H K/L-04
FRONT DOOR LOCK ACTUATOR RH
REAR DOOR LOCK ACTUATOR LH
REAR DOOR LOCK ACTUATOR RH
REAR GATE LOCK ACTUATOR
TRUNK LID LOCK ACTUATOR

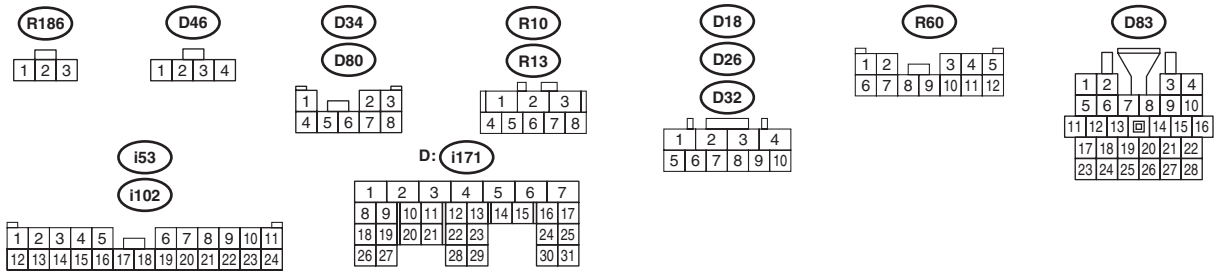
R186
D46
D34
D80
R10
R13
D18
D26
D32
R60
D83
i53
i102
D: i171

WI-48279

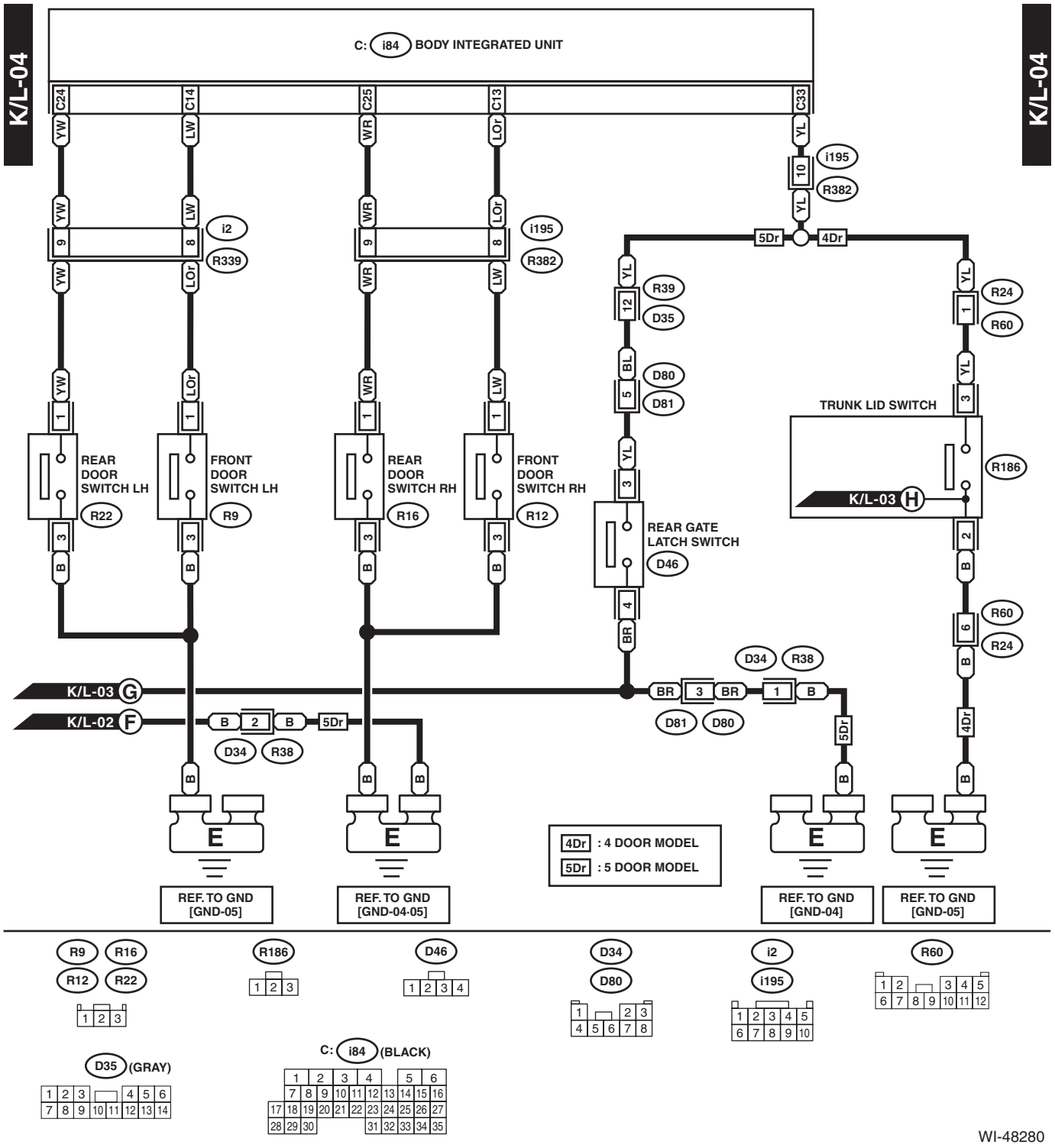
K/L-04
C: i84 BODY INTEGRATED UNIT
C24
C14
C25
C13
C33
YW
LW
WR
LOr
YL
i195
R382
i2
R339
5Dr
4Dr
R39
D35
R24
R60
D80
D81
TRUNK LID SWITCH
R186
K/L-03 H
REAR DOOR SWITCH LH
R22
FRONT DOOR SWITCH LH
R9
REAR DOOR SWITCH RH
R16
FRONT DOOR SWITCH RH
R12
REAR GATE LATCH SWITCH
D46
BR
D34
R38
K/L-03 G
K/L-02 F
D81
D80
E
4Dr : 4 DOOR MODEL
5Dr : 5 DOOR MODEL
REF. TO GND [GND-05]
REF. TO GND [GND-04·05]
REF. TO GND [GND-04]
REF. TO GND [GND-05]
R9
R16
R12
R22
R186
D46
D34
D80
i2
i195
R60
D35 (GRAY)
C: i84 (BLACK)
WI-48280

30.Multi-function Display (MFD) System

A: WIRING DIAGRAM

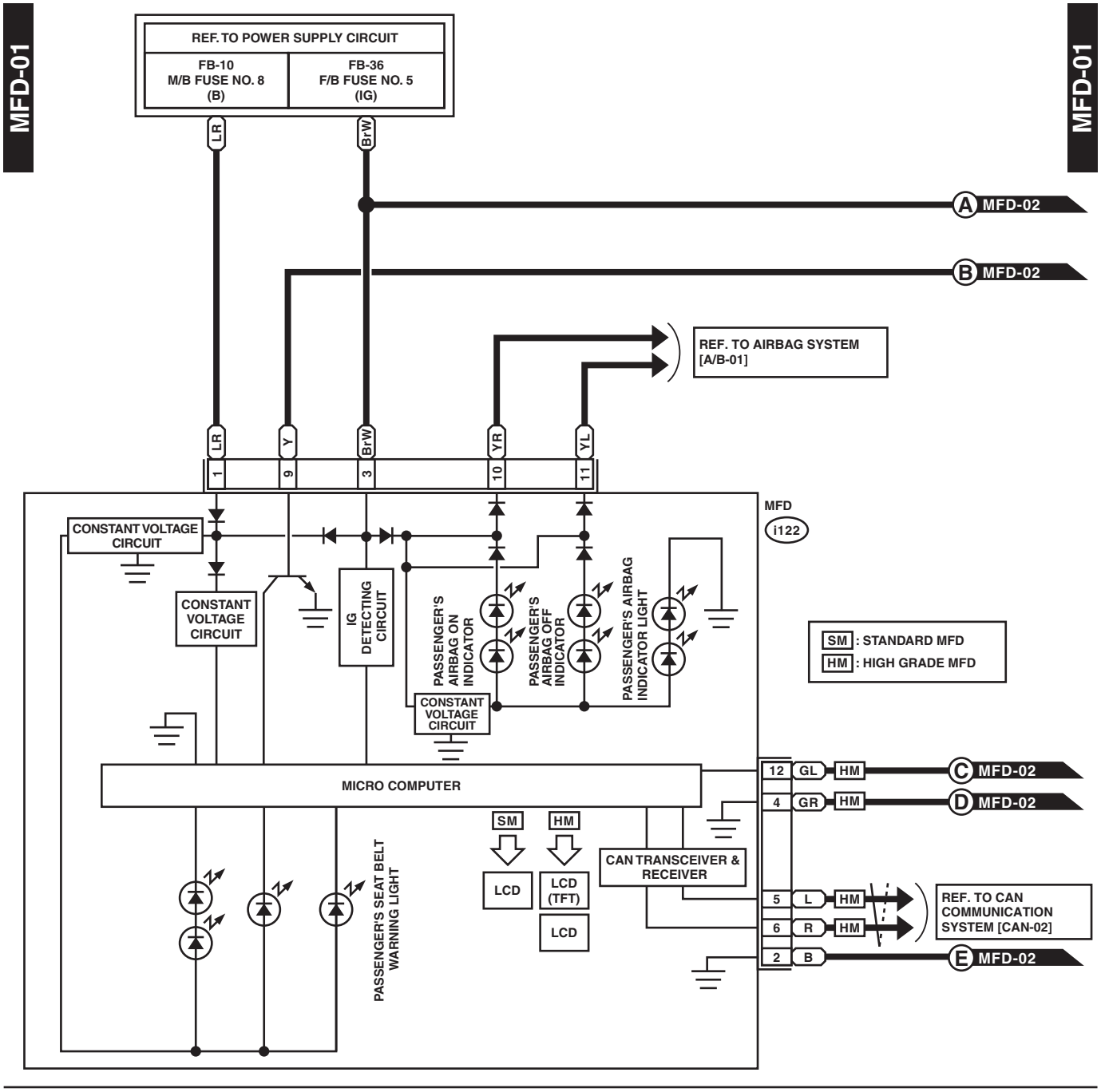

i122 (BLACK)

1	2	3	4	5	6
7	8	9	10	11	12

WI-48281

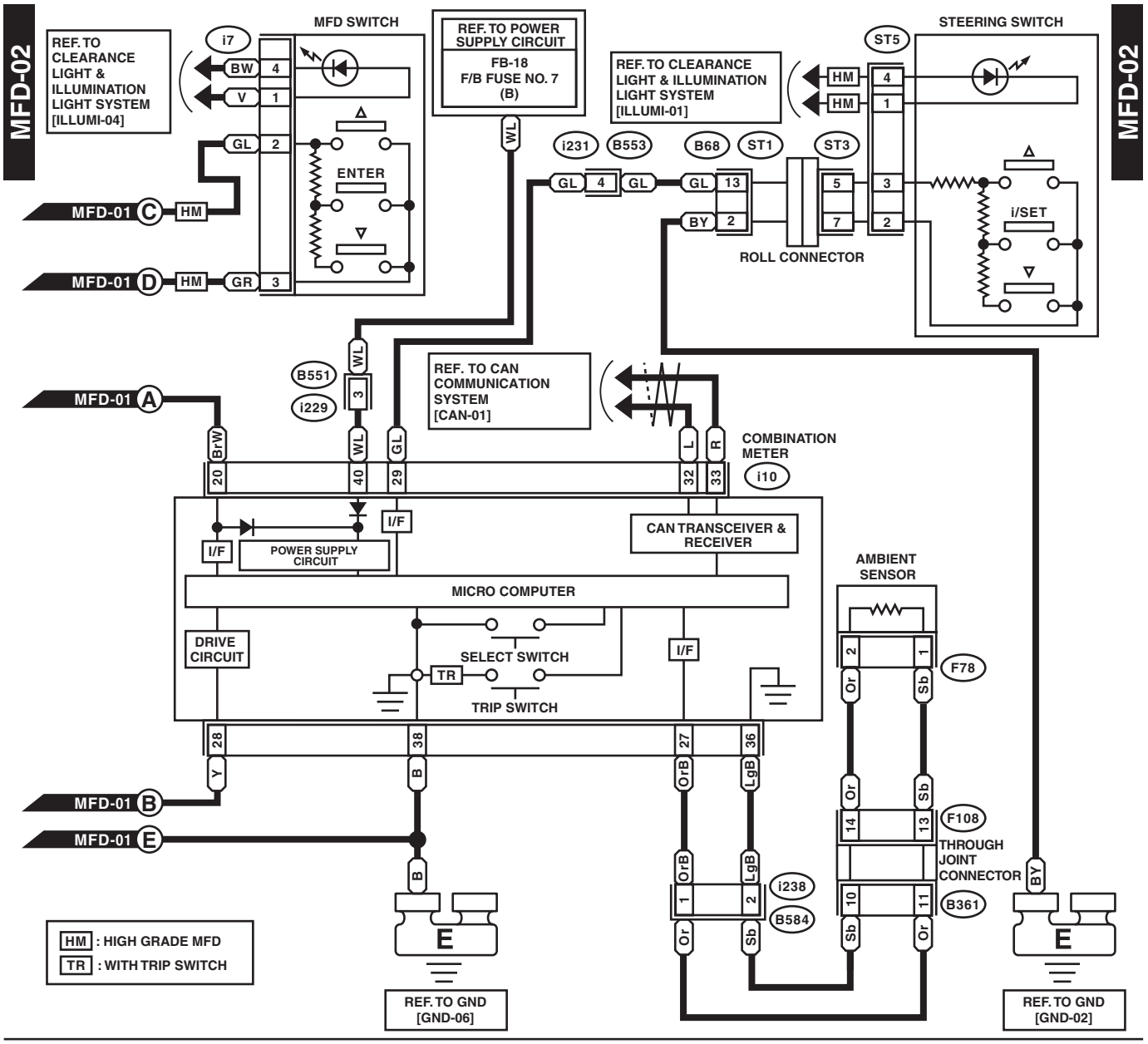
MFD-02
REF. TO CLEARANCE LIGHT & ILLUMINATION LIGHT SYSTEM [ILLUMI-04]
MFD SWITCH
i7
BW
V
GL
ENTER
MFD-01 C HM
MFD-01 D HM GR
REF. TO POWER SUPPLY CIRCUIT
FB-18 F/B FUSE NO. 7 (B)
WL
REF. TO CLEARANCE LIGHT & ILLUMINATION LIGHT SYSTEM [ILLUMI-01]
STEERING SWITCH
ST5
HM
i231
B553
B68
ST1
ST3
BY
i/SET
ROLL CONNECTOR
B551
i229
MFD-01 A
REF. TO CAN COMMUNICATION SYSTEM [CAN-01]
BrW
L
R
COMBINATION METER
i10
I/F
POWER SUPPLY CIRCUIT
CAN TRANSCEIVER & RECEIVER
MICRO COMPUTER
DRIVE CIRCUIT
SELECT SWITCH
TR
TRIP SWITCH
AMBIENT SENSOR
F78
Or
Sb
MFD-01 B
MFD-01 E
Y
B
OrB
LgB
F108
THROUGH JOINT CONNECTOR
i238
B584
B361
HM : HIGH GRADE MFD
TR : WITH TRIP SWITCH
REF. TO GND [GND-06]
REF. TO GND [GND-02]

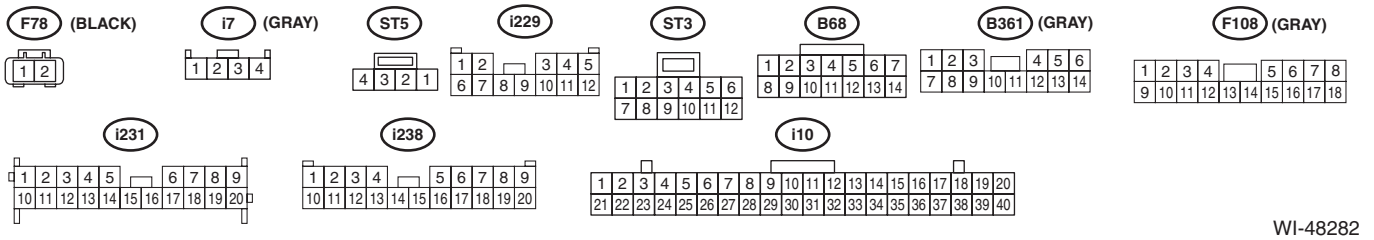
F78 (BLACK)
i7 (GRAY)
ST5
i229
ST3
B68
B361 (GRAY)
F108 (GRAY)
i231
i238
i10

WI-48282

31.Navigation System

A: WIRING DIAGRAM

1. WITHOUT EyeSight

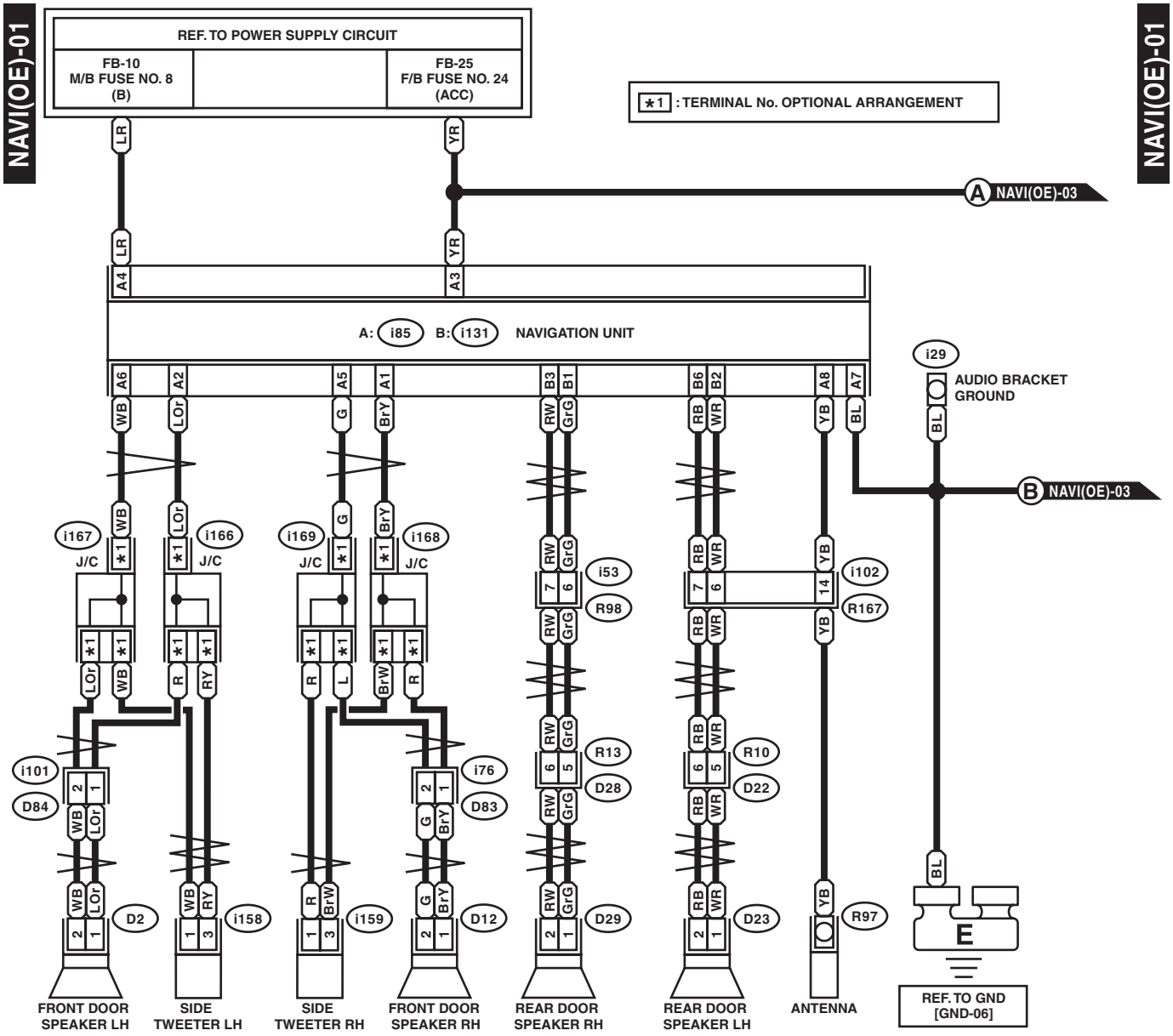

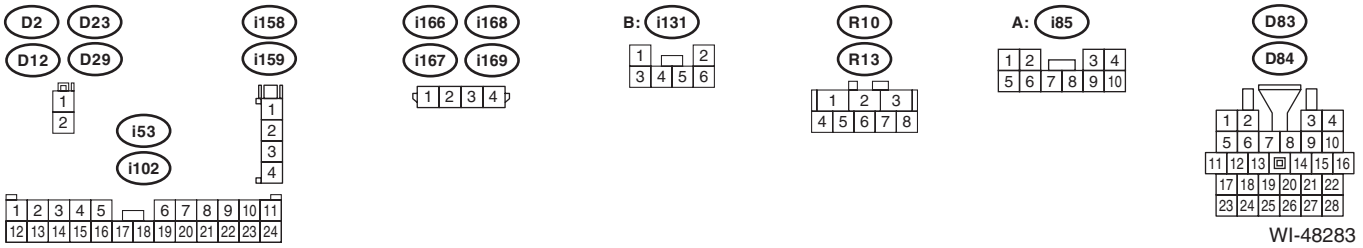

WI-48283

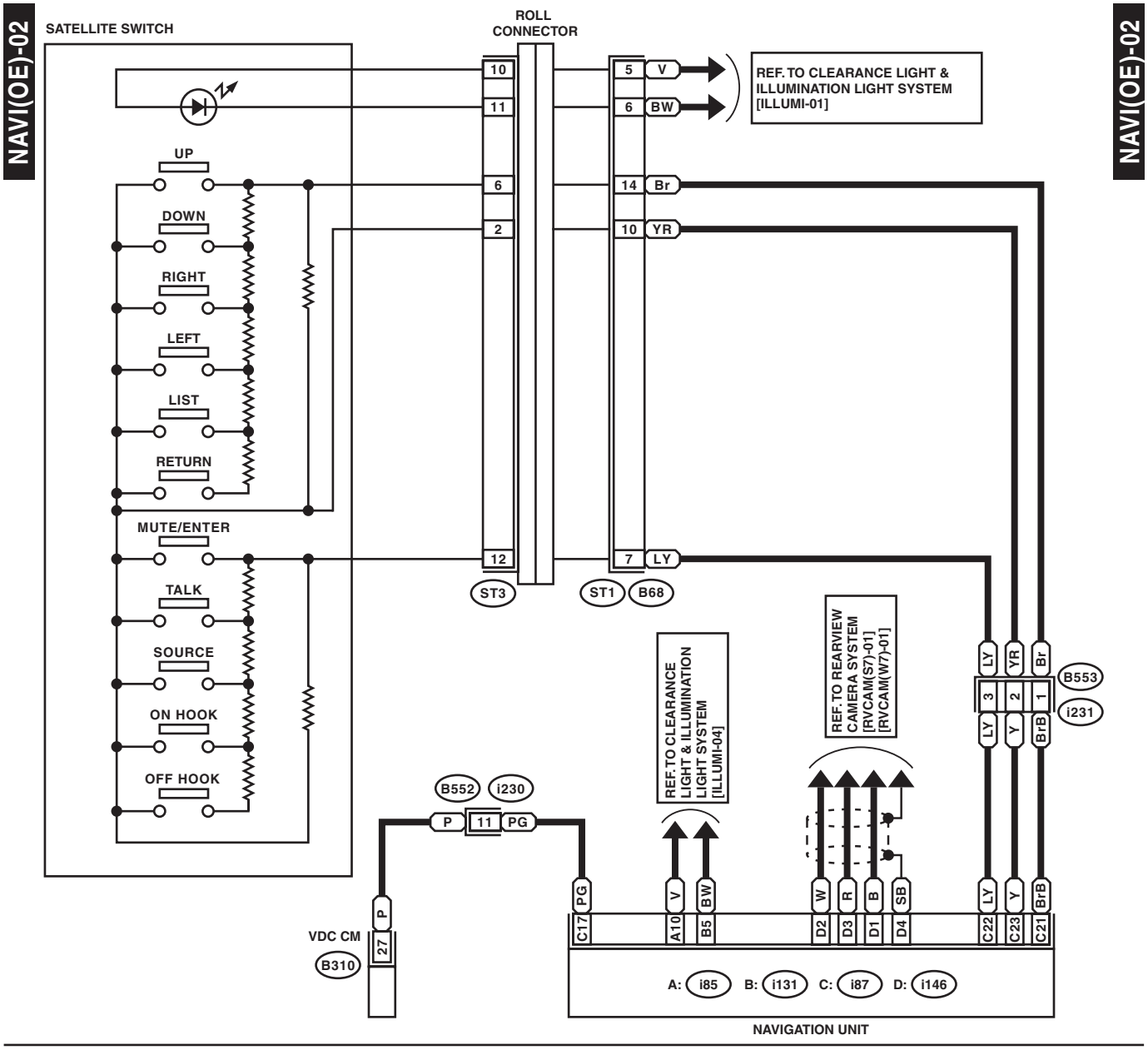
NAVI(OE)-02
SATELLITE SWITCH
ROLL CONNECTOR
UP
DOWN
RIGHT
LEFT
LIST
RETURN
MUTE/ENTER
TALK
SOURCE
ON HOOK
OFF HOOK
REF. TO CLEARANCE LIGHT & ILLUMINATION LIGHT SYSTEM [ILLUMI-01]
REF. TO CLEARANCE LIGHT & ILLUMINATION LIGHT SYSTEM [ILLUMI-04]
REF. TO REARVIEW CAMERA SYSTEM [RVCAM(S7)-01] [RVCAM(W7)-01]
ST3
ST1
B68
B552
i230
B553
i231
VDC CM
B310
NAVIGATION UNIT
A: i85
B: i131
C: i87
D: i146
WI-48284

WIRING SYSTEM

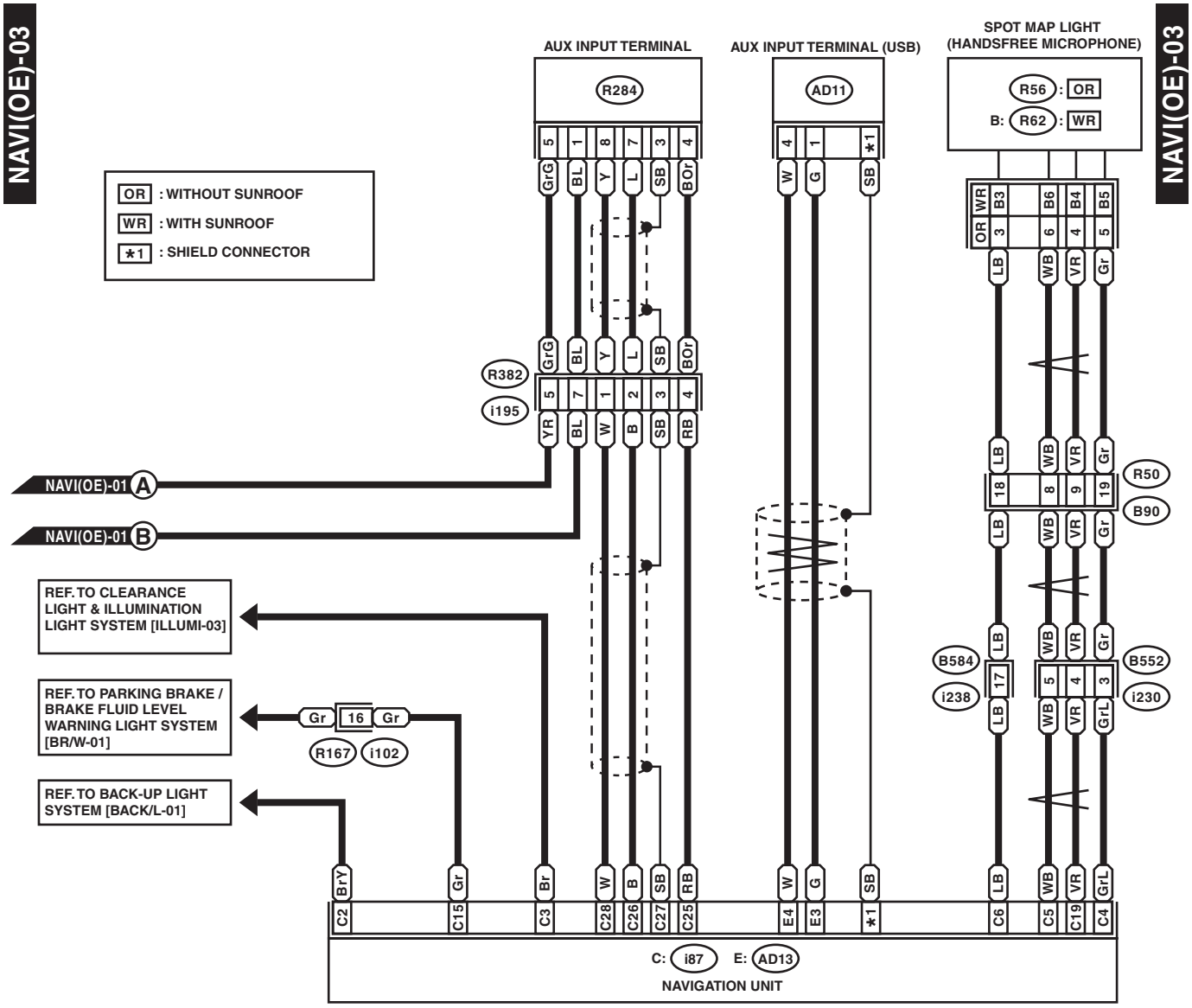

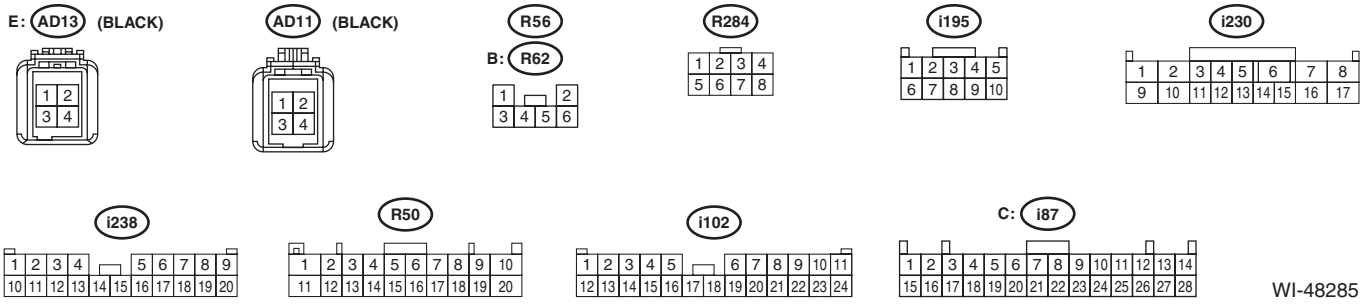

WI-48285

2. WITH EyeSight

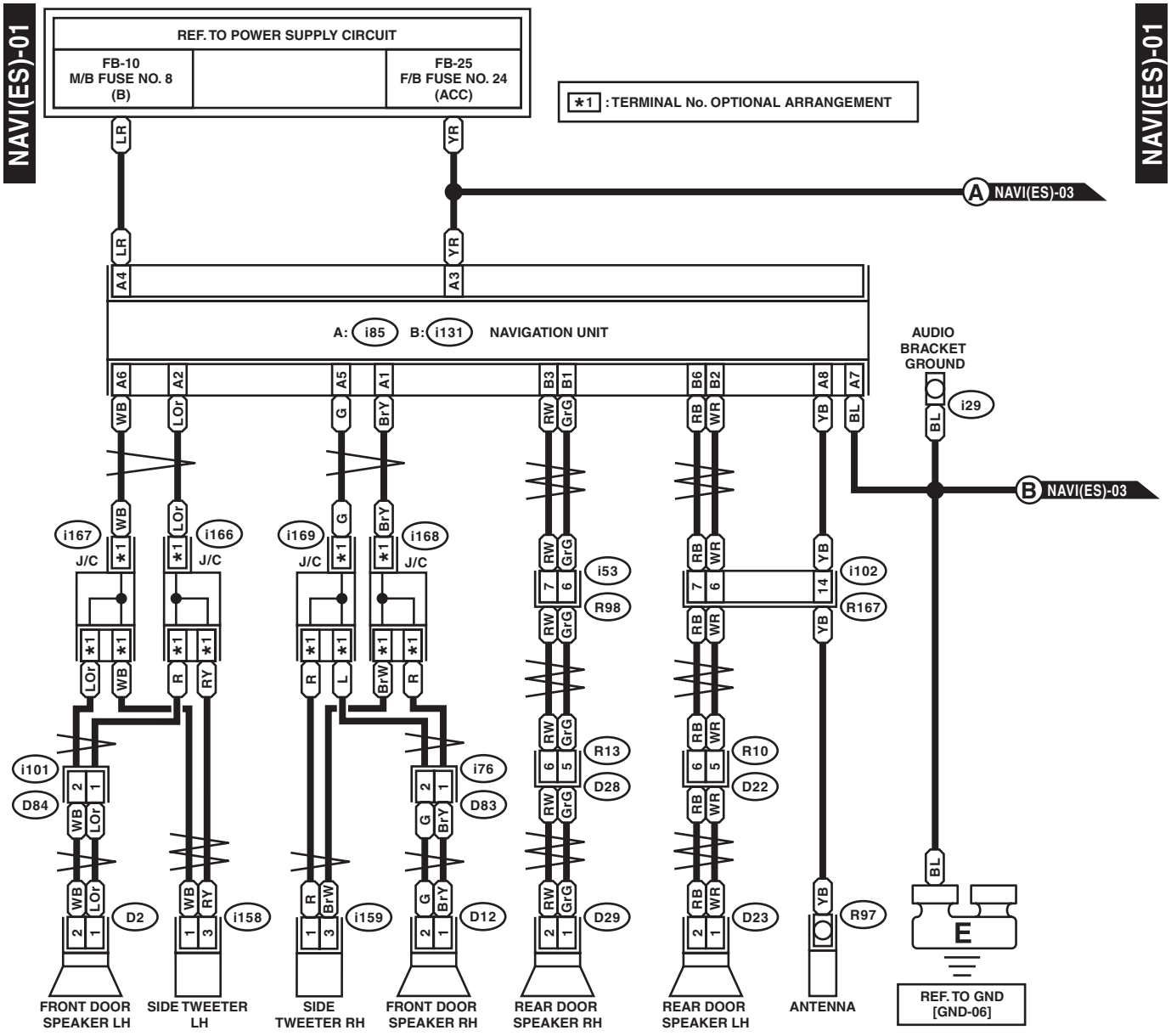

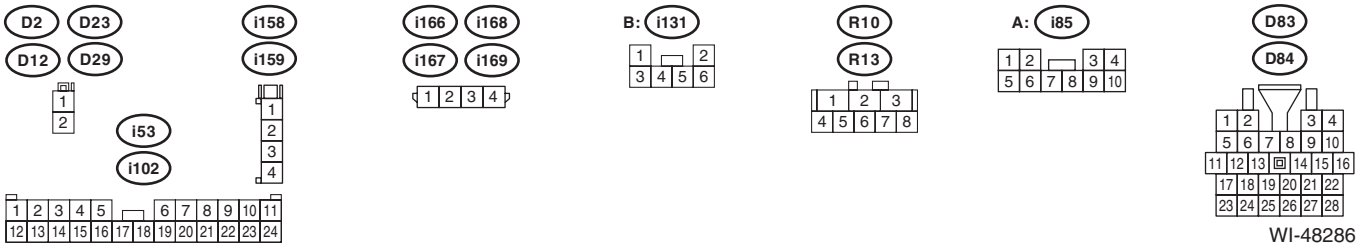

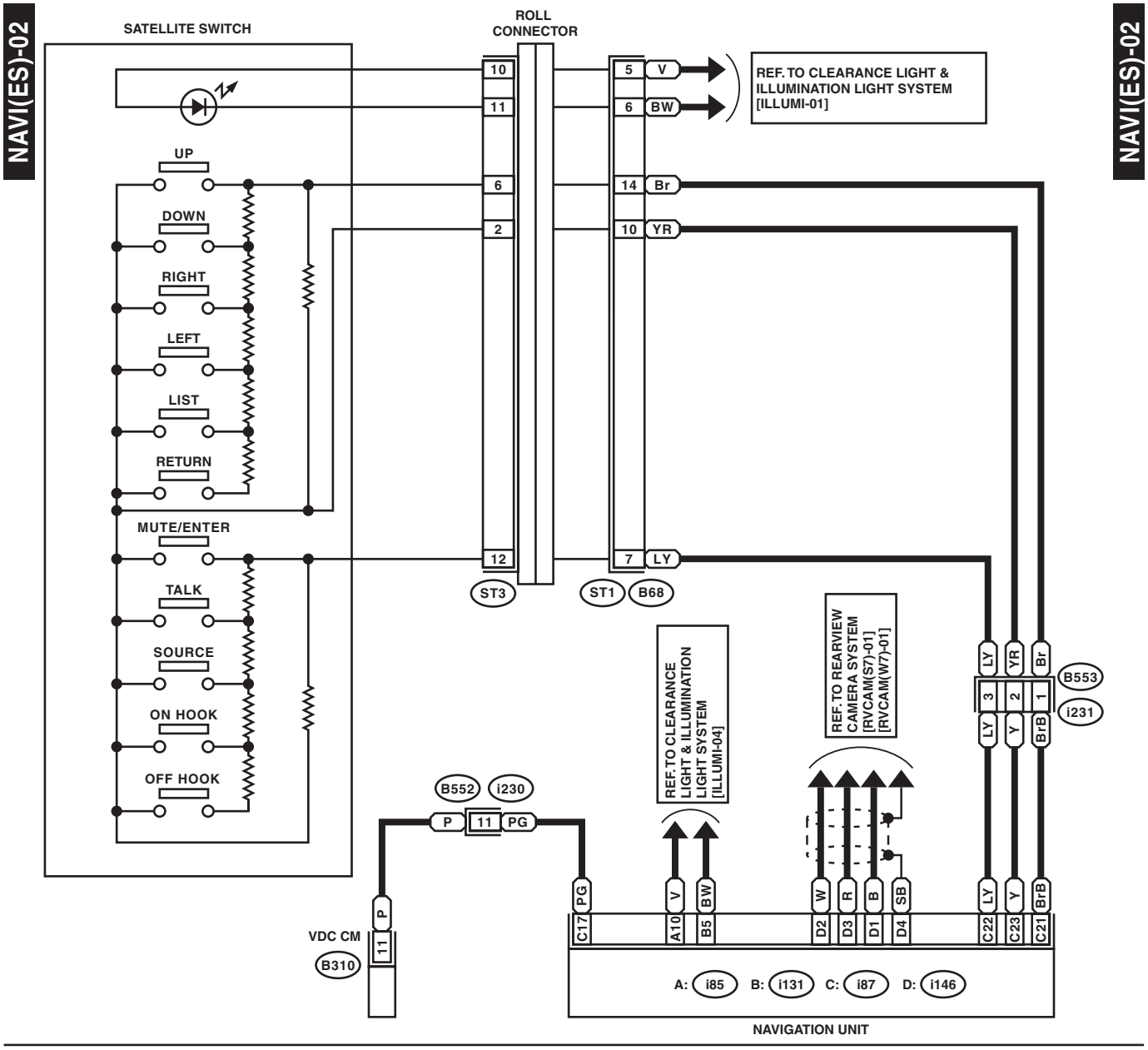
NAVI(ES)-02
NAVI(ES)-02
SATELLITE SWITCH
ROLL CONNECTOR
REF. TO CLEARANCE LIGHT & ILLUMINATION LIGHT SYSTEM [ILLUMI-01]
UP
DOWN
RIGHT
LEFT
LIST
RETURN
MUTE/ENTER
TALK
SOURCE
ON HOOK
OFF HOOK
ST3
ST1
B68
REF. TO CLEARANCE LIGHT & ILLUMINATION LIGHT SYSTEM [ILLUMI-04]
REF. TO REARVIEW CAMERA SYSTEM [RVCAM(S7)-01] [RVCAM(W7)-01]
B553
i231
B552
i230
VDC CM
B310
A: i85 B: i131 C: i87 D: i146
NAVIGATION UNIT
D: i146
B: i131
A: i85
ST3
B68
i230
i231
C: i87
B310 (BLACK)
WI-48287

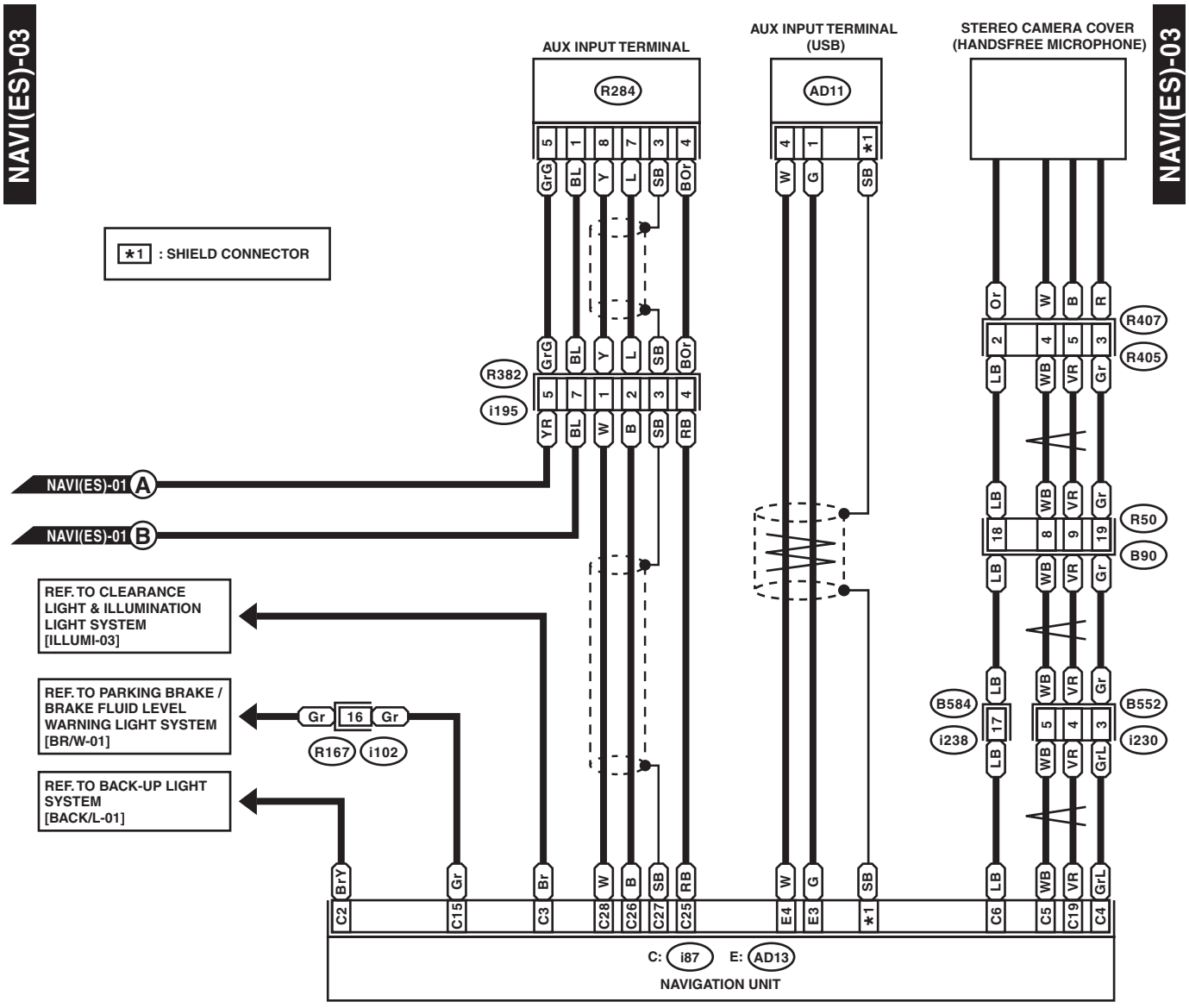
NAVI(ES)-03
NAVI(ES)-03
AUX INPUT TERMINAL
AUX INPUT TERMINAL (USB)
STEREO CAMERA COVER (HANDSFREE MICROPHONE)
R284
AD11
*1 : SHIELD CONNECTOR
R382
i195
R407
R405
R50
B90
B584
B552
i238
i230
NAVI(ES)-01 A
NAVI(ES)-01 B
REF. TO CLEARANCE LIGHT & ILLUMINATION LIGHT SYSTEM [ILLUMI-03]
REF. TO PARKING BRAKE / BRAKE FLUID LEVEL WARNING LIGHT SYSTEM [BR/W-01]
REF. TO BACK-UP LIGHT SYSTEM [BACK/L-01]
R167
i102
C: i87 E: AD13
NAVIGATION UNIT

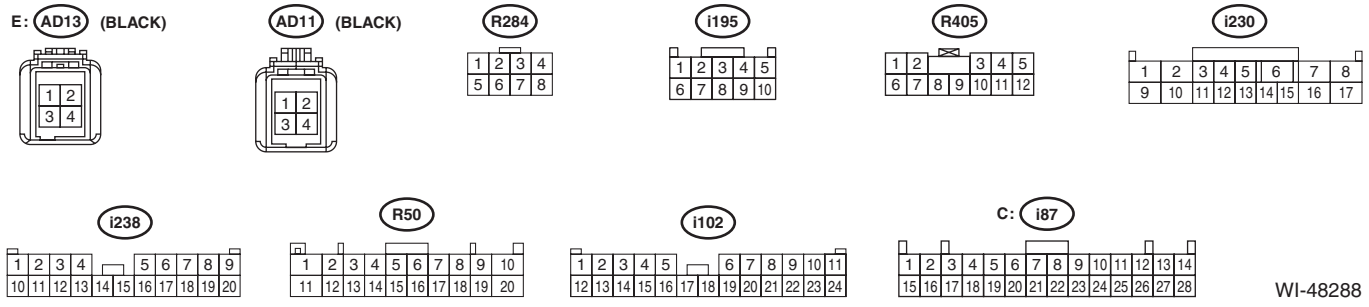
E: AD13 (BLACK)
AD11 (BLACK)
R284
i195
R405
i230
i238
R50
i102
C: i87

WI-48288

32.Occupant Detection System

A: WIRING DIAGRAM

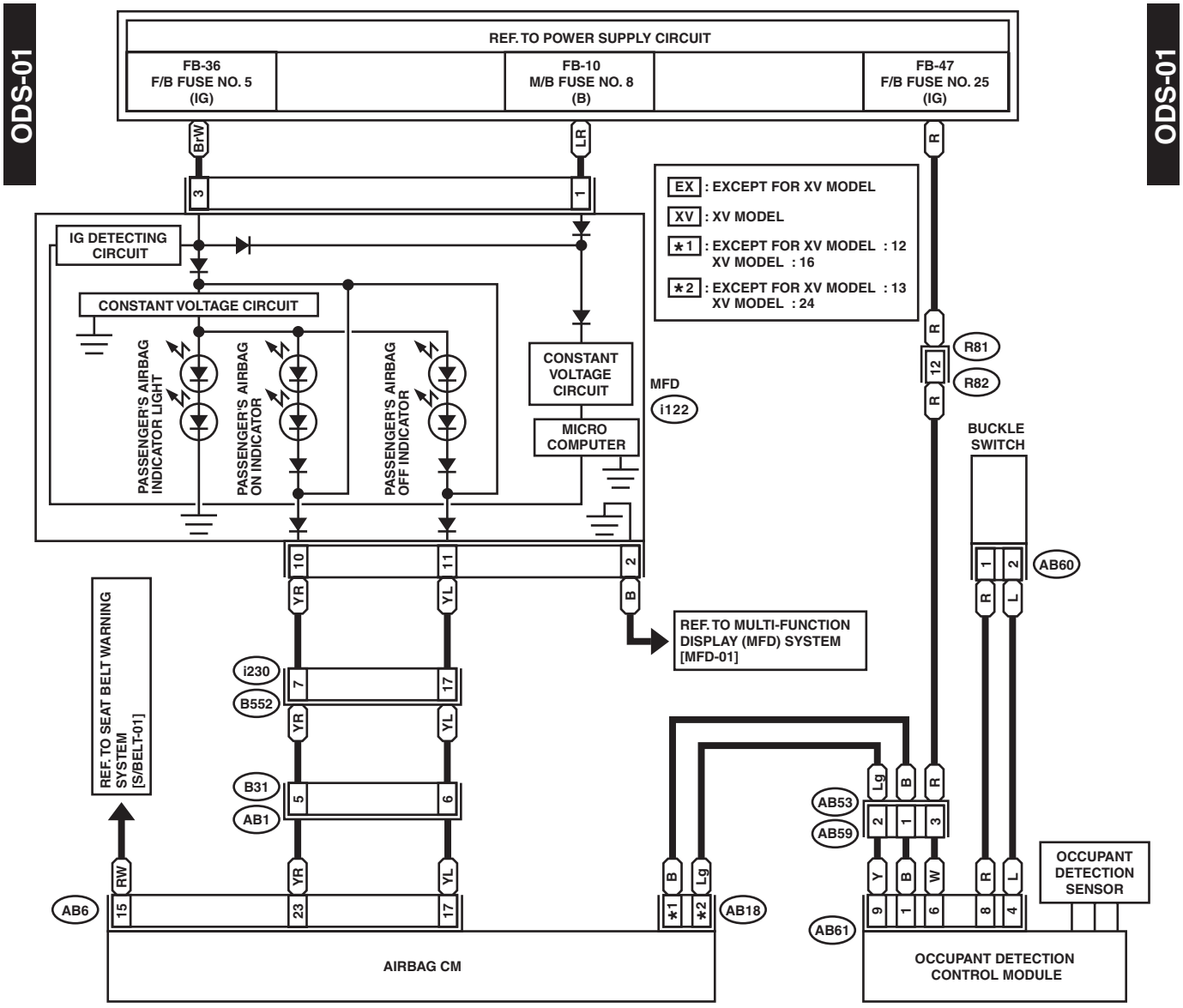

33.Oil Pressure Warning Light System

A: WIRING DIAGRAM

OIL/P-01

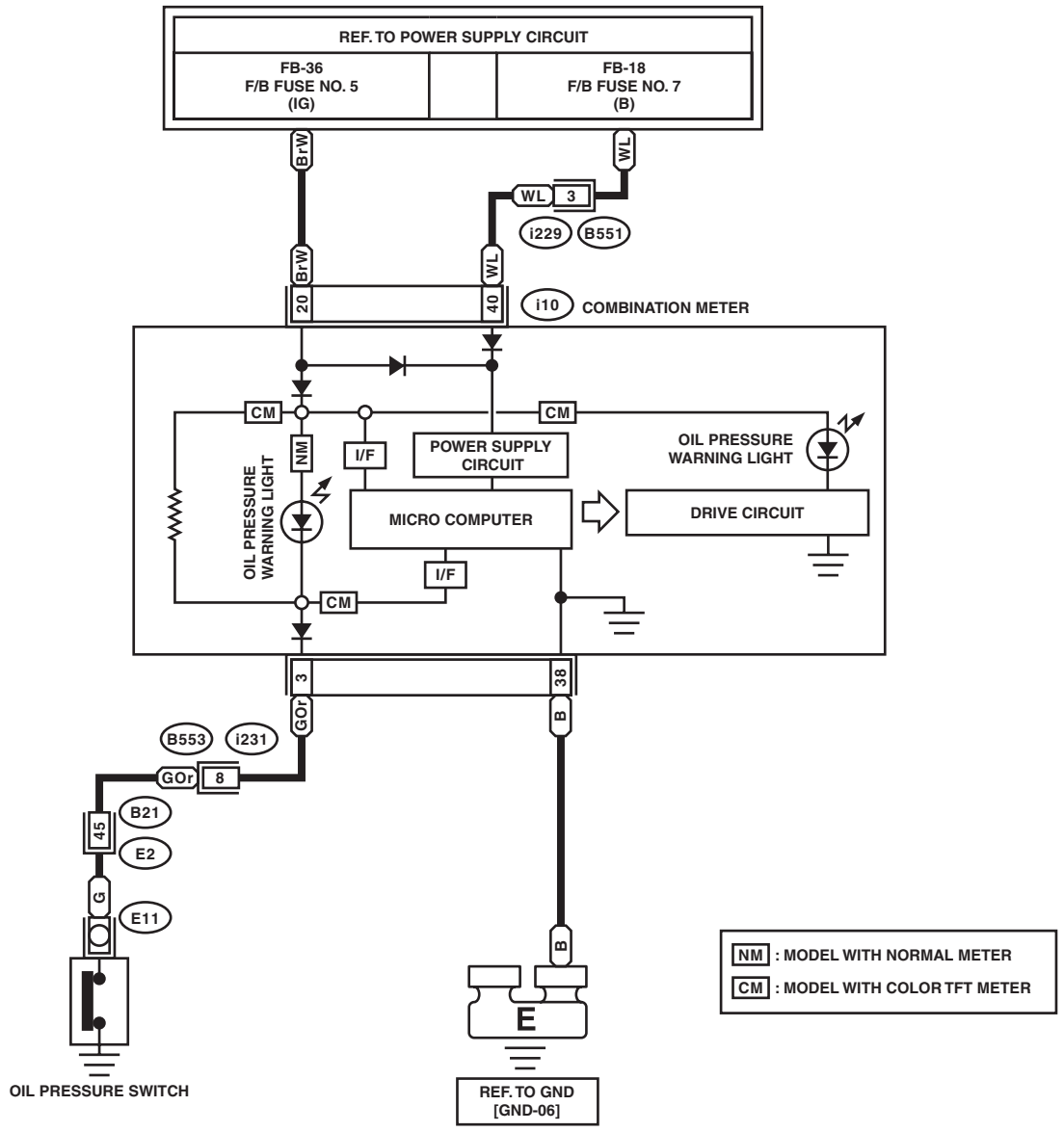

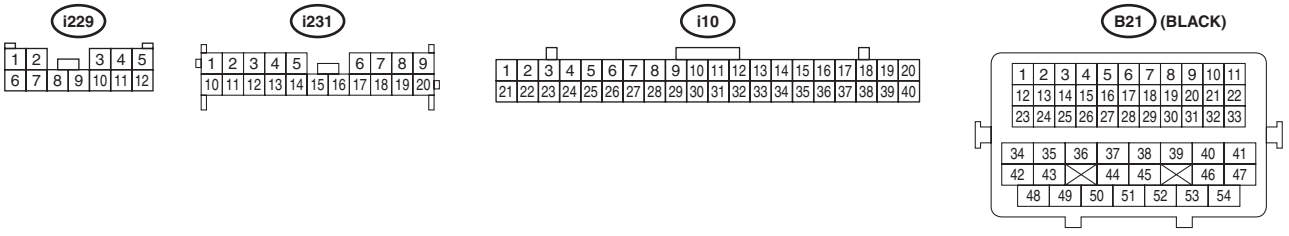

WI-48290

34.Parking Brake / Brake Fluid Level Warning Light System

A: WIRING DIAGRAM

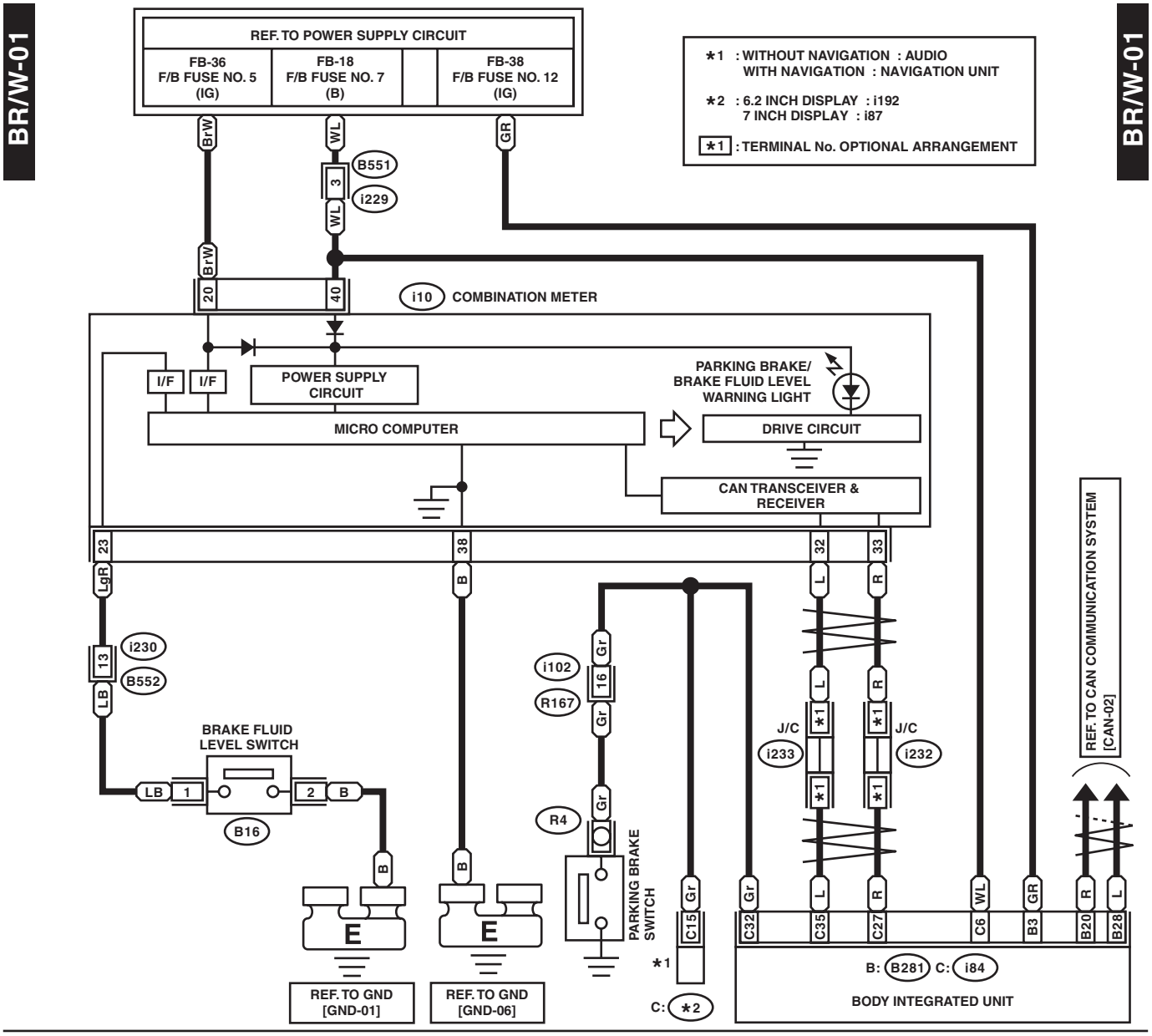

WI-48291

35.Power Window System

A: WIRING DIAGRAM

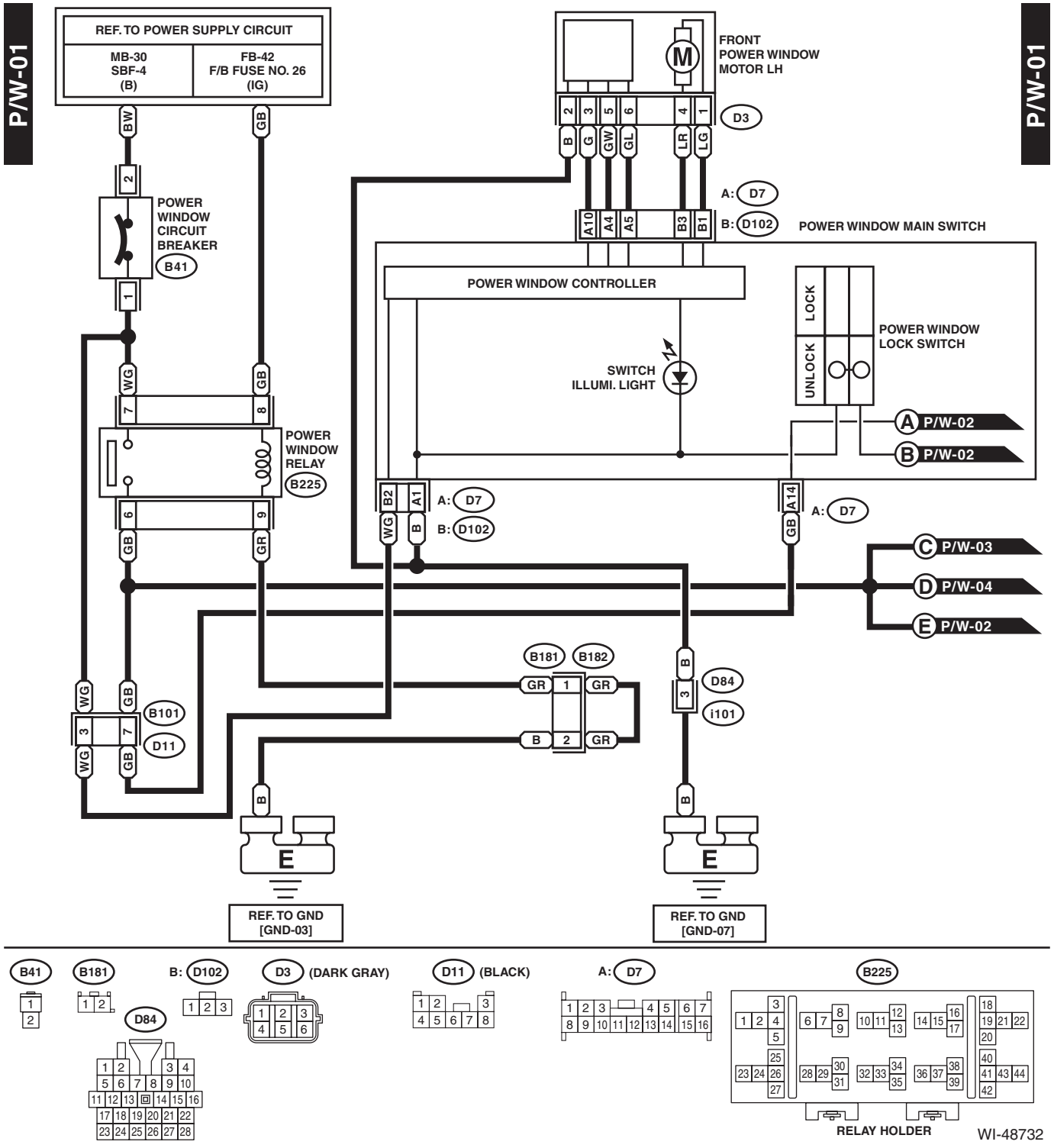

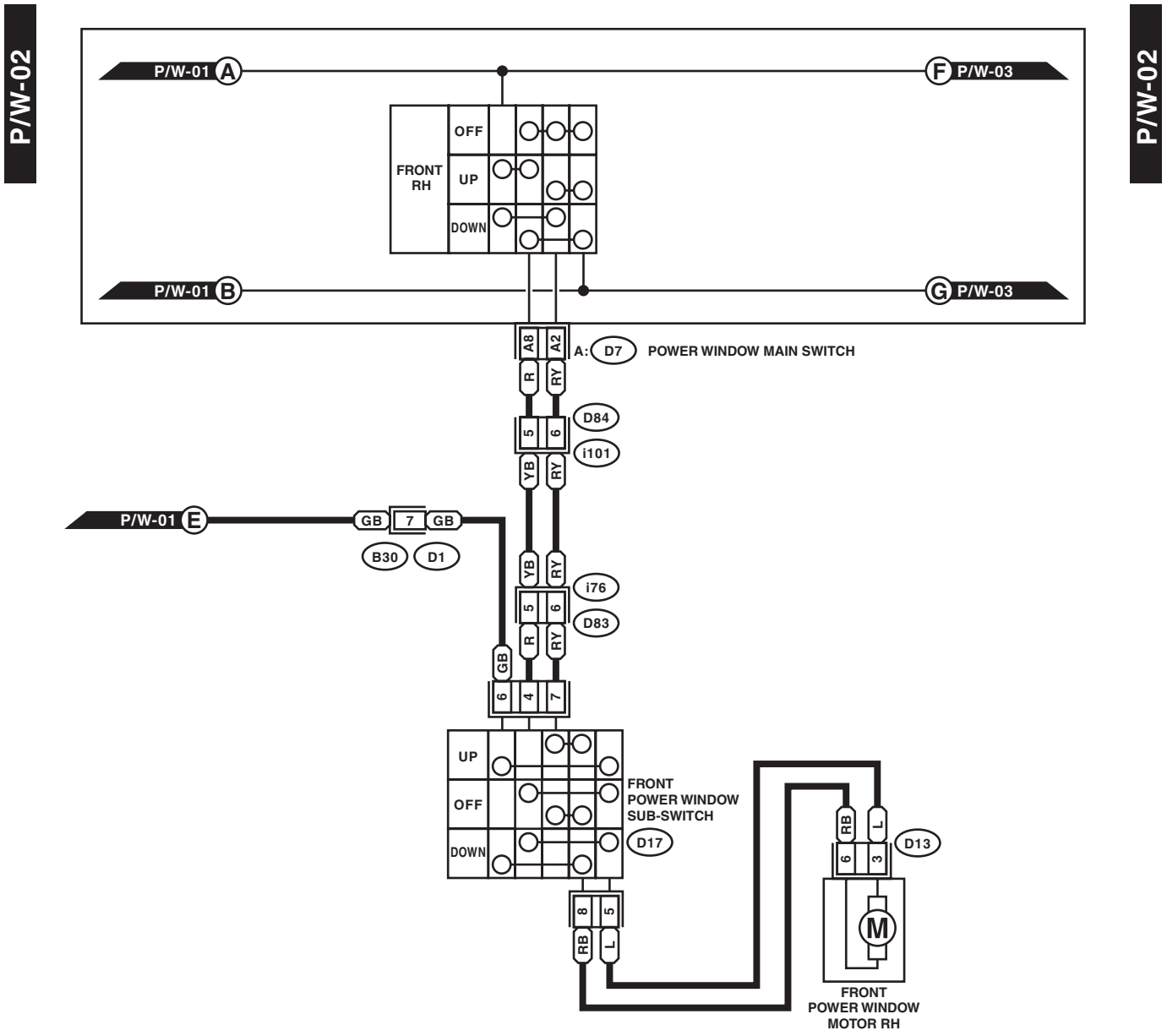
P/W-02
P/W-02
P/W-01 A
F P/W-03
FRONT RH
OFF
UP
DOWN
P/W-01 B
G P/W-03
A8
A2
A: D7 POWER WINDOW MAIN SWITCH
R
RY
D84
5
6
i101
YB
RY
P/W-01 E
GB
7
GB
B30
D1
YB
RY
i76
5
6
D83
R
RY
GB
6
4
7
UP
OFF
DOWN
FRONT POWER WINDOW SUB-SWITCH
D17
8
5
RB
L
RB
L
D13
6
3
M
FRONT POWER WINDOW MOTOR RH

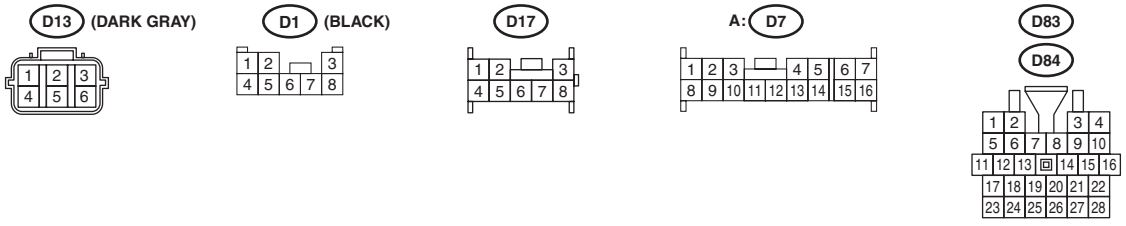
D13 (DARK GRAY)
1 2 3
4 5 6
D1 (BLACK)
1 2 3
4 5 6 7 8
D17
1 2 3
4 5 6 7 8
A: D7
1 2 3 4 5 6 7
8 9 10 11 12 13 14 15 16
D83
D84
1 2 3 4
5 6 7 8 9 10
11 12 13 14 15 16
17 18 19 20 21 22
23 24 25 26 27 28

WI-48733

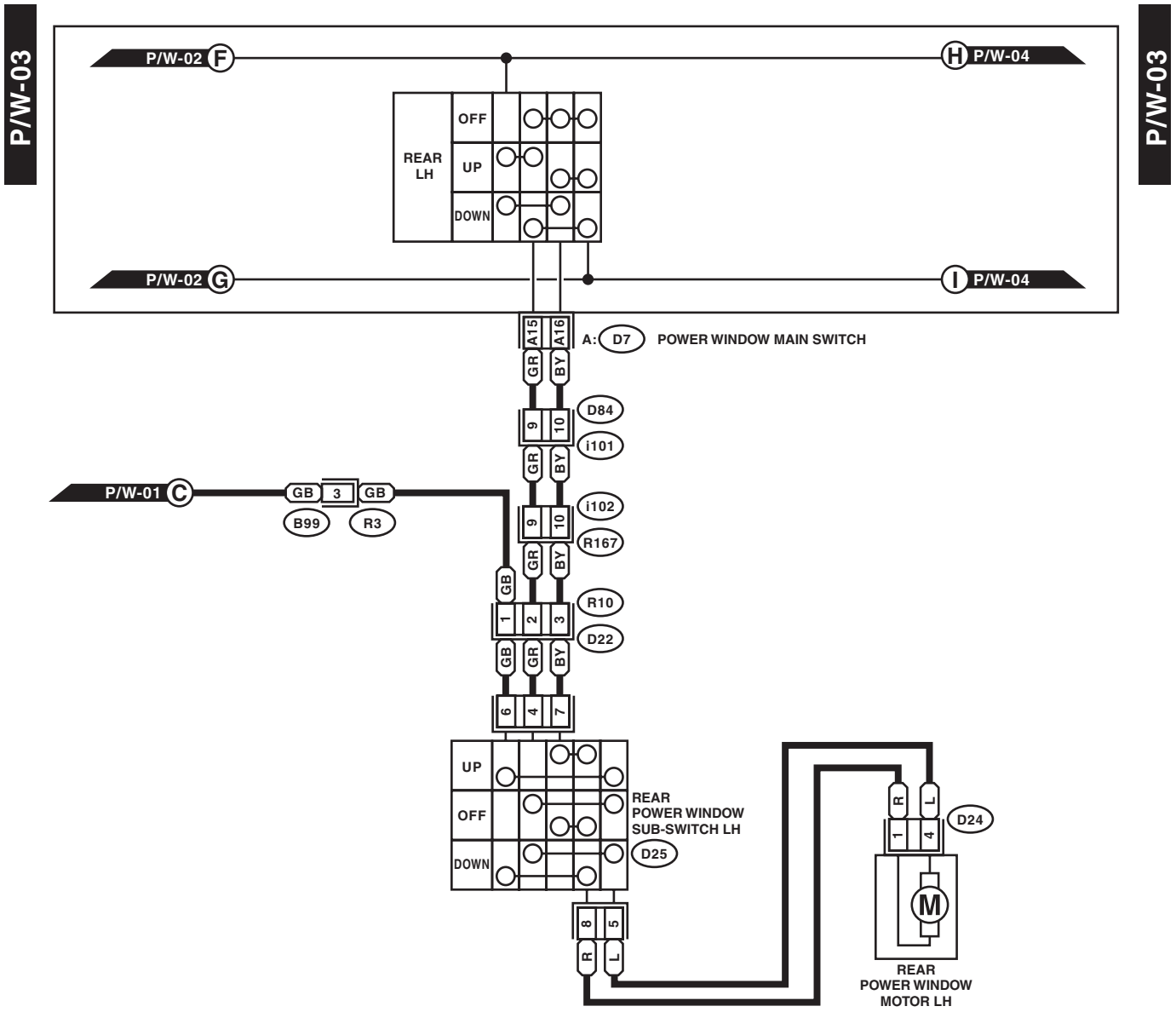
P/W-03
P/W-03
P/W-02 F
H P/W-04
REAR LH
OFF
UP
DOWN
P/W-02 G
I P/W-04
A15
A16
A: D7 POWER WINDOW MAIN SWITCH
GR
BY
D84
9
10
i101
P/W-01 C
GB
3
GB
B99
R3
i102
R167
R10
D22
1
2
3
6
4
7
UP
OFF
DOWN
REAR POWER WINDOW SUB-SWITCH LH
D25
8
5
R
L
D24
M
REAR POWER WINDOW MOTOR LH

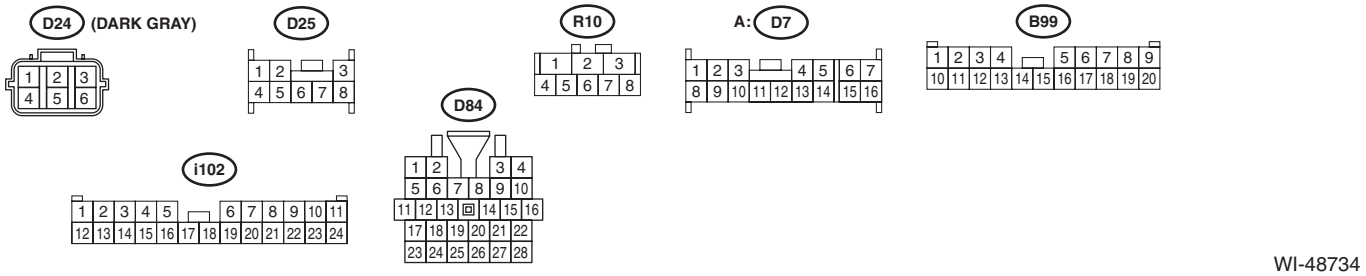
D24 (DARK GRAY)
D25
R10
A: D7
B99
i102
D84

WI-48734

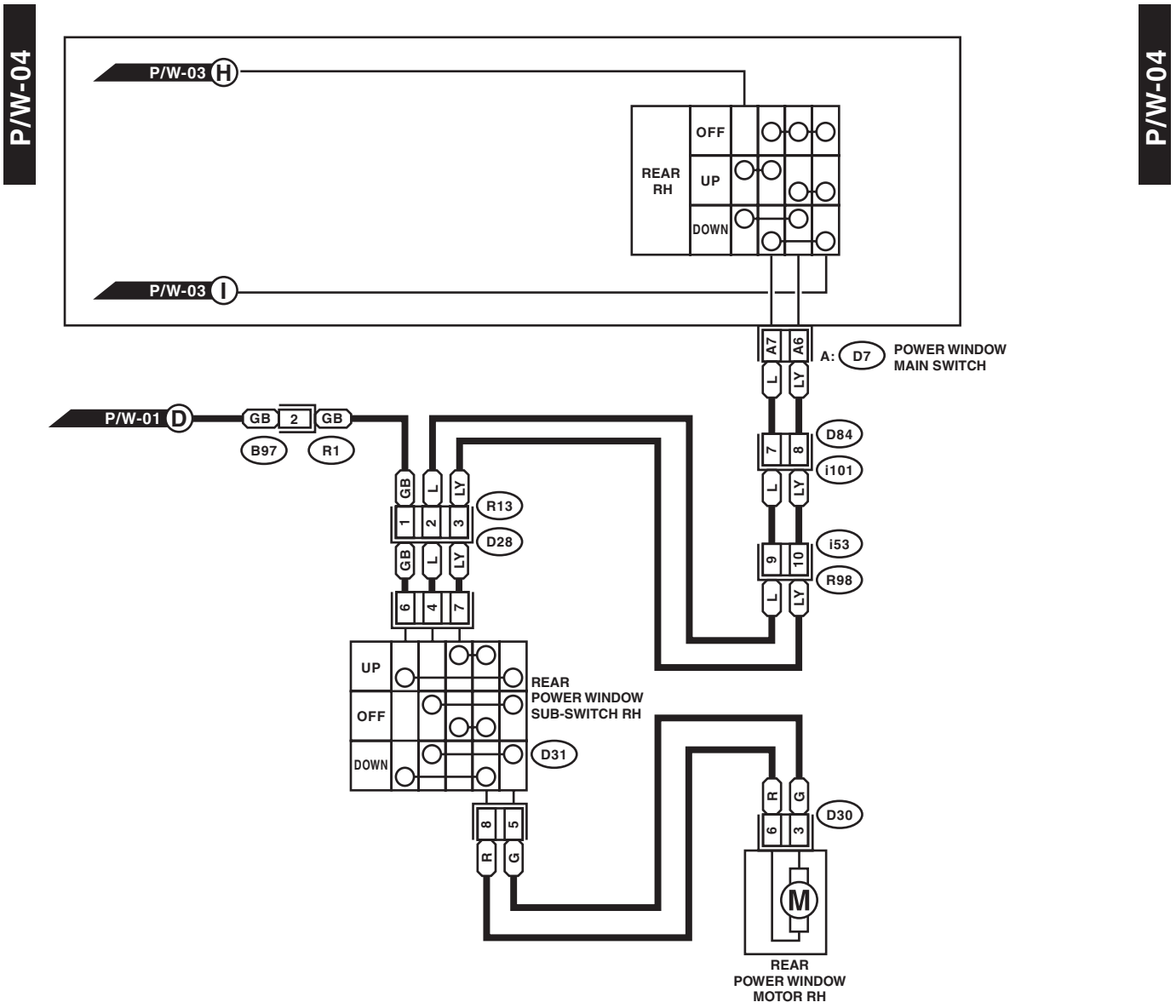
P/W-04
P/W-04
P/W-03 H
P/W-03 I
REAR RH
OFF
UP
DOWN
A: D7
POWER WINDOW MAIN SWITCH
A7
A6
L
LY
P/W-01 D
GB
2
GB
B97
R1
D84
7
8
i101
R13
1
2
3
D28
i53
9
10
R98
6
4
7
UP
OFF
DOWN
REAR POWER WINDOW SUB-SWITCH RH
D31
8
5
R
G
D30
6
3
M
REAR POWER WINDOW MOTOR RH

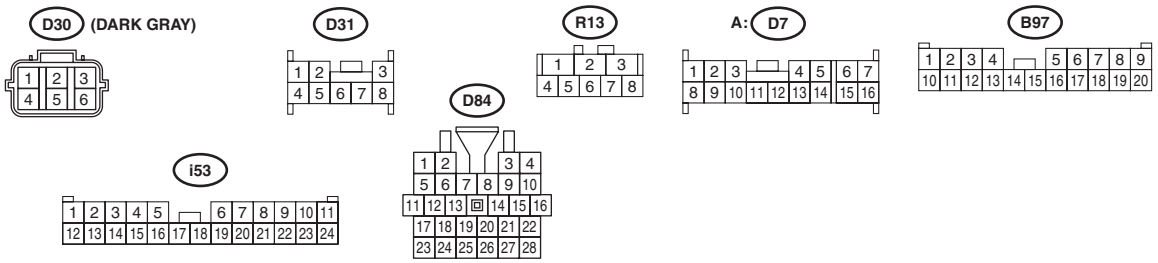
D30 (DARK GRAY)
D31
R13
A: D7
B97
D84
i53

WI-48735

36.Push Button Start System

A: WIRING DIAGRAM

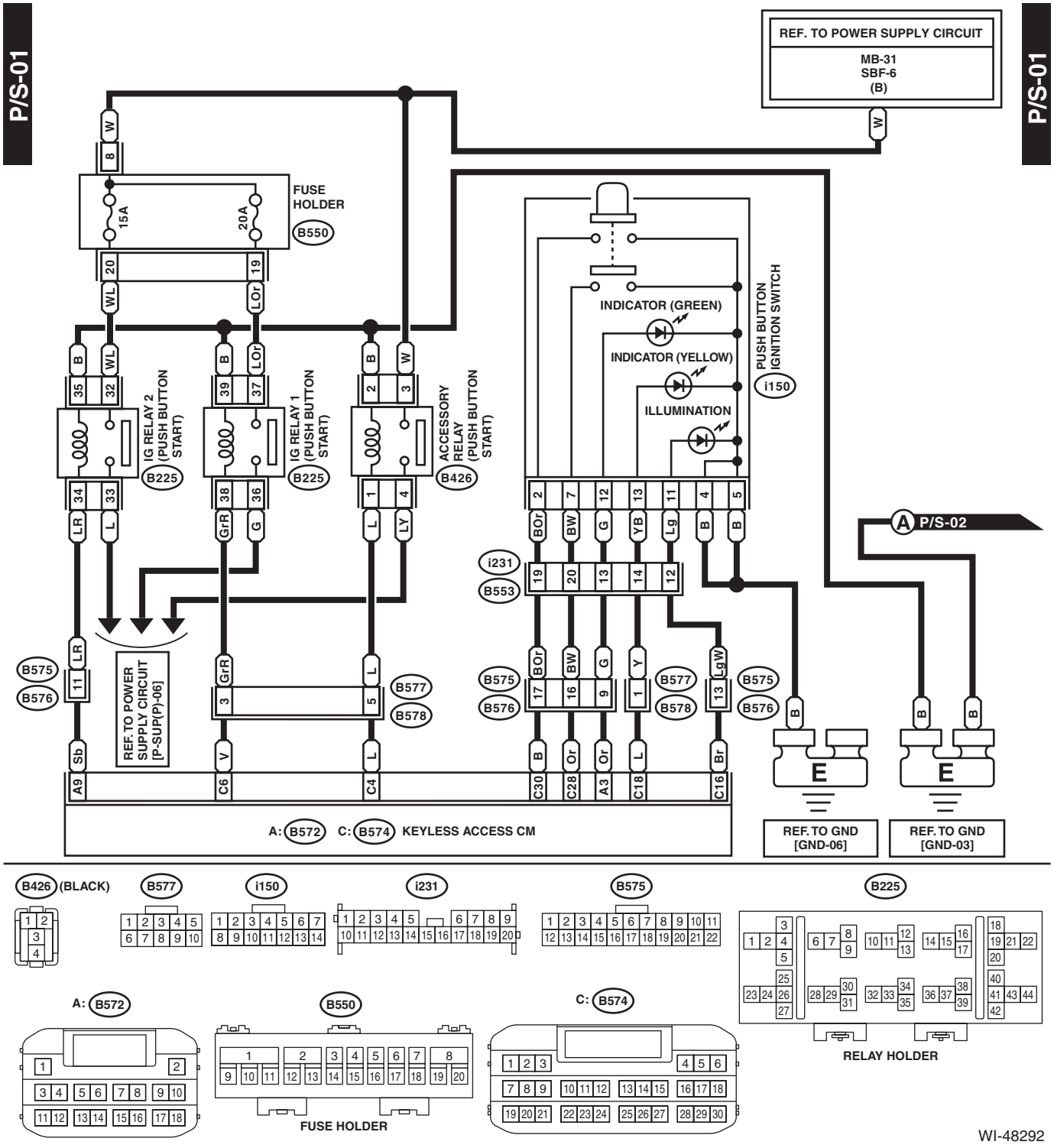

WI-48292

WIRING SYSTEM

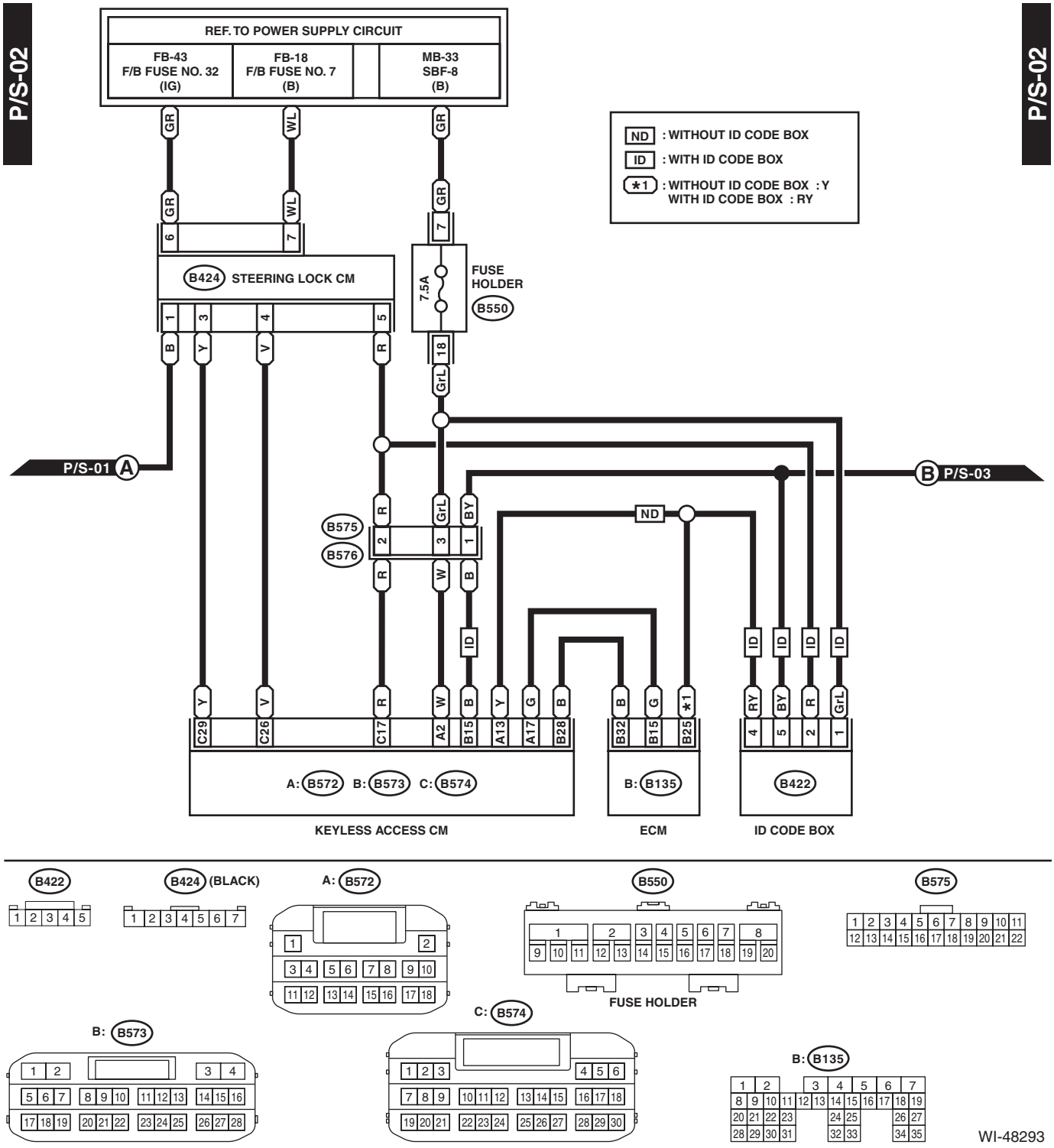

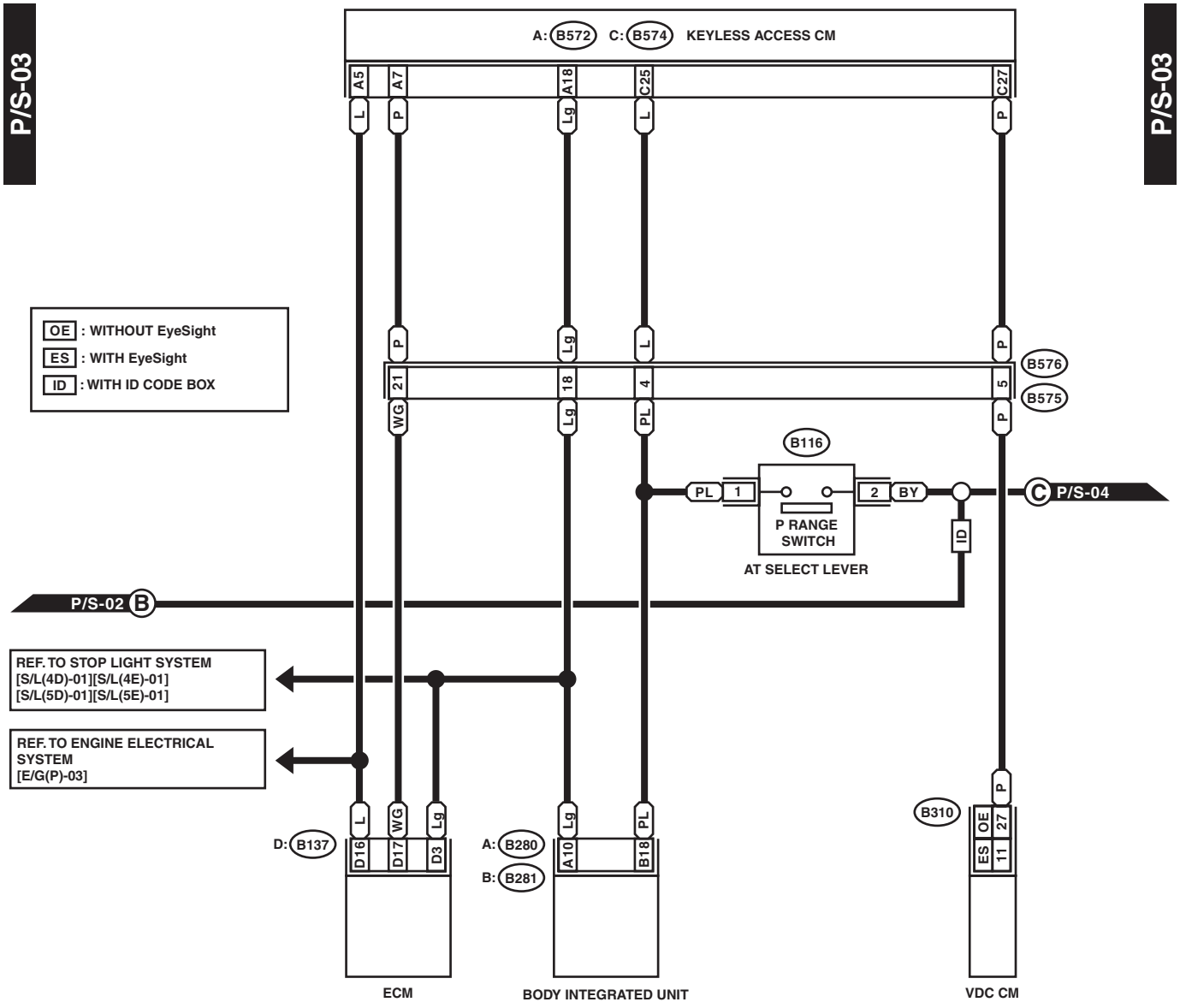
P/S-03
P/S-03
A: B572 C: B574 KEYLESS ACCESS CM
A5
A7
A18
C25
C27
L
P
Lg
L
P
OE : WITHOUT EyeSight
ES : WITH EyeSight
ID : WITH ID CODE BOX
B576
B575
21
18
4
5
WG
Lg
PL
P
B116
PL
1
2
BY
C P/S-04
P RANGE SWITCH
AT SELECT LEVER
ID
P/S-02 B
REF. TO STOP LIGHT SYSTEM
[S/L(4D)-01][S/L(4E)-01]
[S/L(5D)-01][S/L(5E)-01]
REF. TO ENGINE ELECTRICAL SYSTEM
[E/G(P)-03]
D: B137
D16
D17
D3
L
WG
Lg
A: B280
B: B281
A10
B18
Lg
PL
B310
OE
ES
27
11
P
ECM
BODY INTEGRATED UNIT
VDC CM

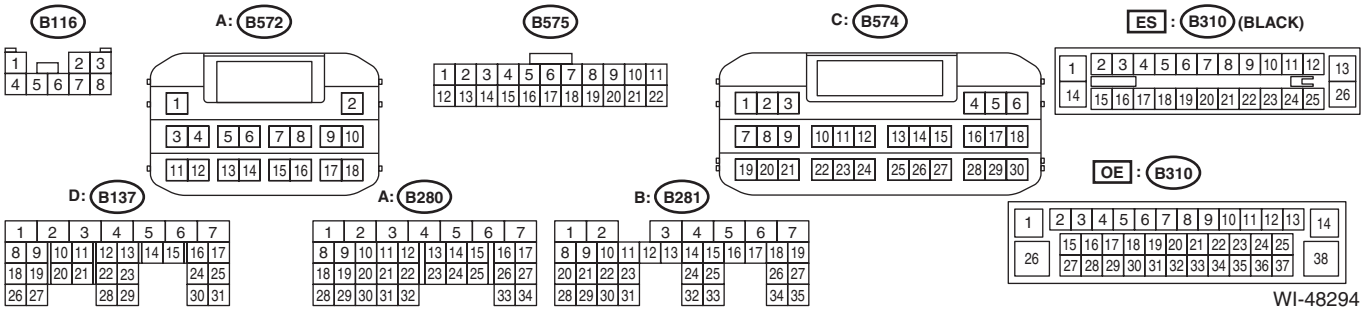
B116
A: B572
B575
C: B574
ES : B310 (BLACK)
D: B137
A: B280
B: B281
OE : B310
WI-48294

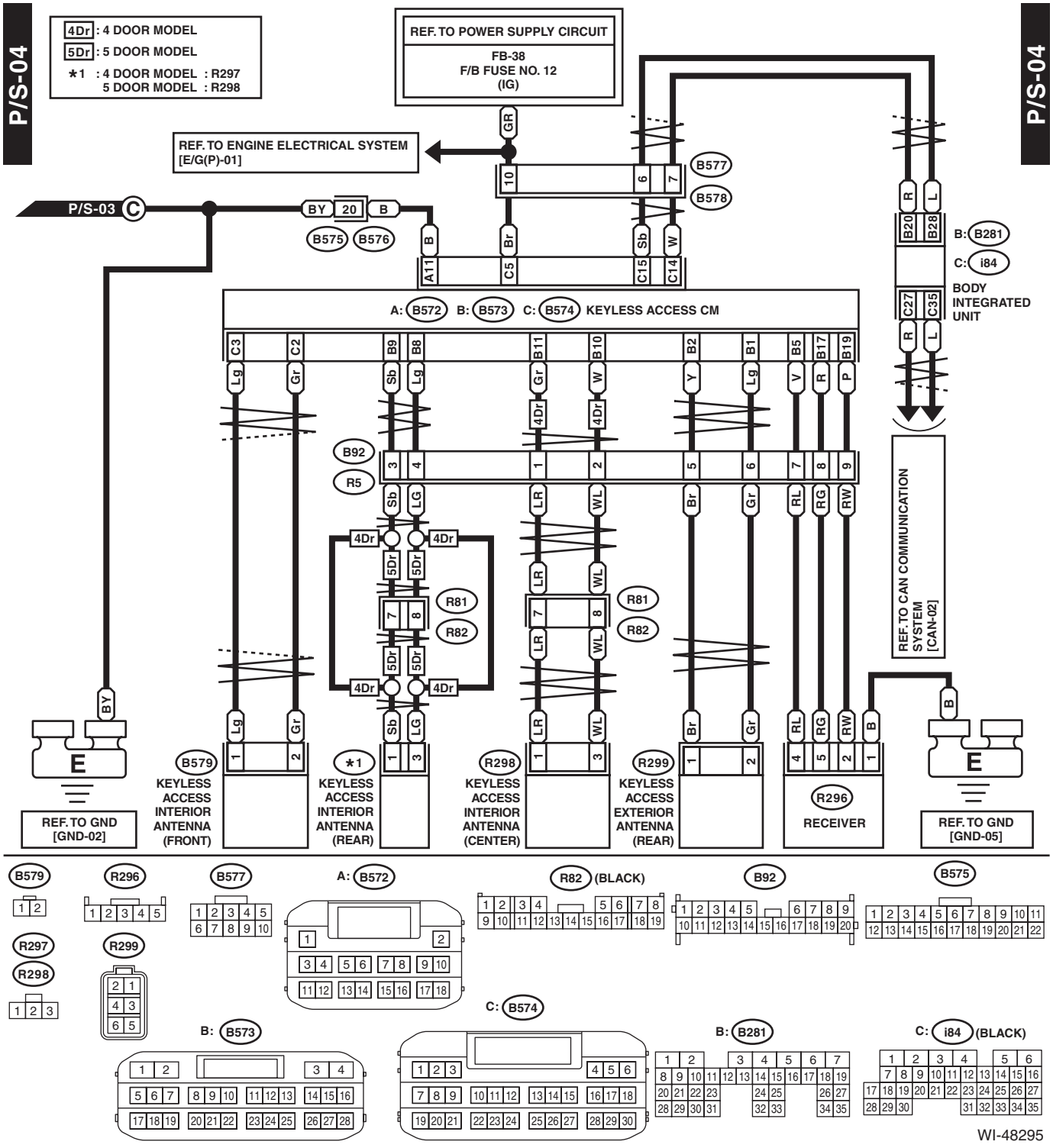
P/S-04
4Dr : 4 DOOR MODEL
5Dr : 5 DOOR MODEL
*1 : 4 DOOR MODEL : R297
5 DOOR MODEL : R298
REF. TO POWER SUPPLY CIRCUIT
FB-38
F/B FUSE NO. 12
(IG)
REF. TO ENGINE ELECTRICAL SYSTEM [E/G(P)-01]
P/S-03 C
B575 B576
B577 B578
A: B572 B: B573 C: B574 KEYLESS ACCESS CM
B: B281
C: i84
BODY INTEGRATED UNIT
B92 R5
R81 R82
REF. TO CAN COMMUNICATION SYSTEM [CAN-02]
B579 KEYLESS ACCESS INTERIOR ANTENNA (FRONT)
*1 KEYLESS ACCESS INTERIOR ANTENNA (REAR)
R298 KEYLESS ACCESS INTERIOR ANTENNA (CENTER)
R299 KEYLESS ACCESS EXTERIOR ANTENNA (REAR)
R296 RECEIVER
REF. TO GND [GND-02]
REF. TO GND [GND-05]
R297
R298
R299
R82 (BLACK)
B92
B575
C: B574
B: B573
B: B281
C: i84 (BLACK)
WI-48295

37.Radiator Fan System

A: WIRING DIAGRAM

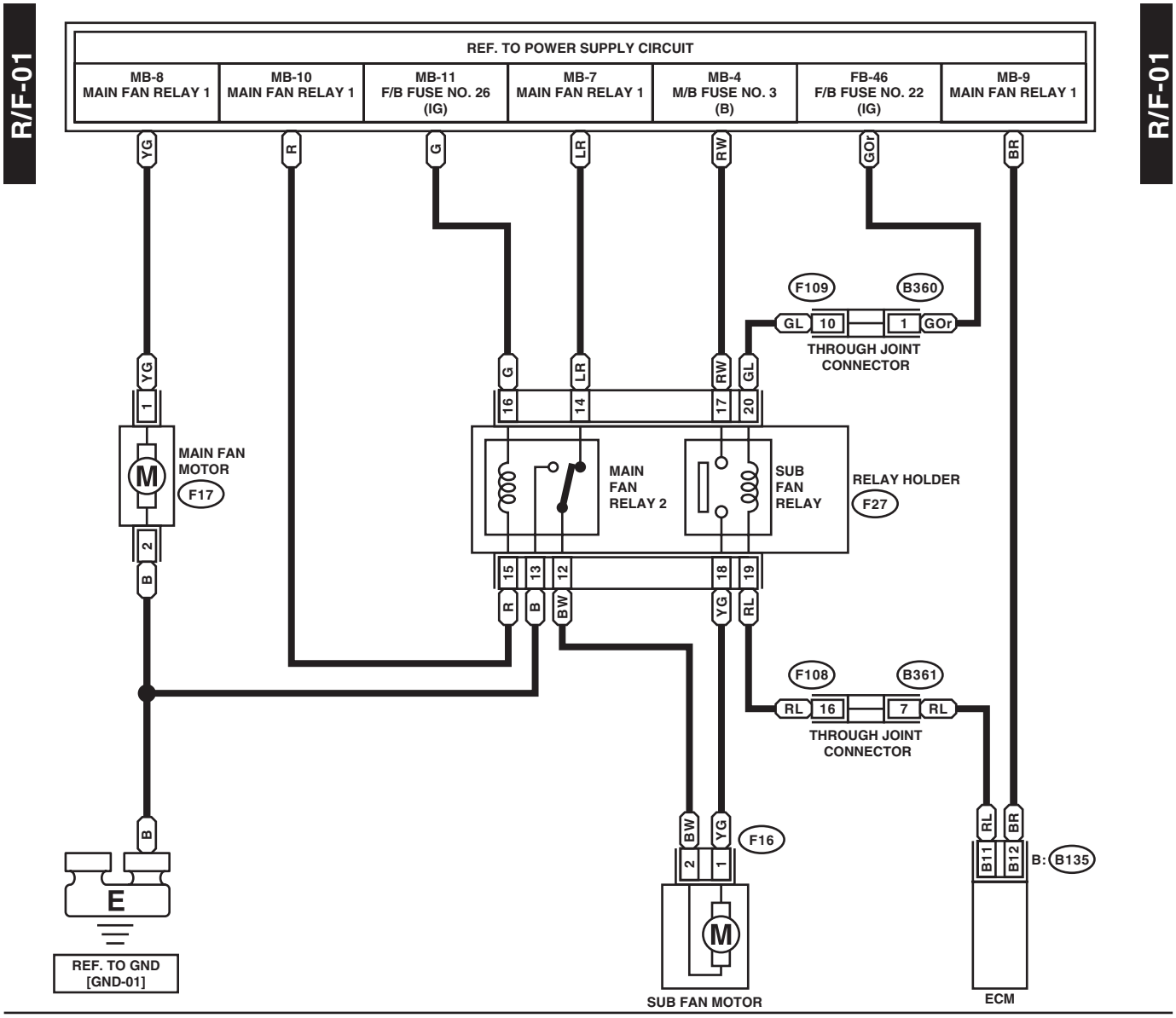

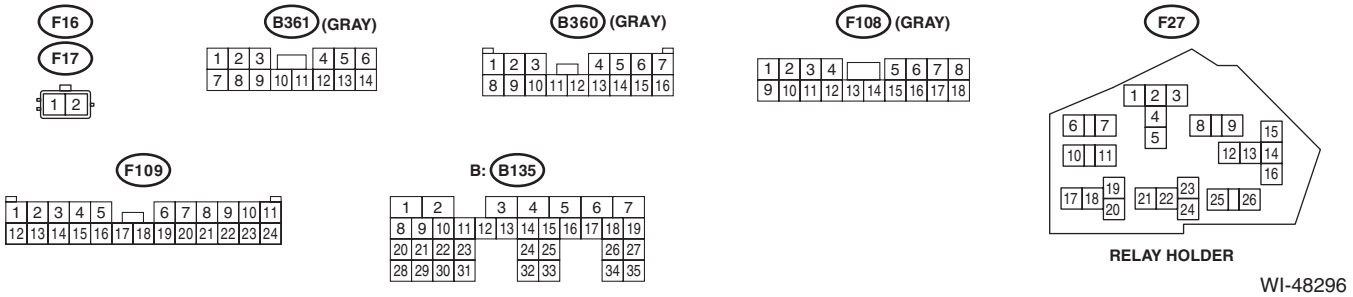

WI-48296

38.Rear Accessory Power Supply Socket System

A: WIRING DIAGRAM

RAPS-01

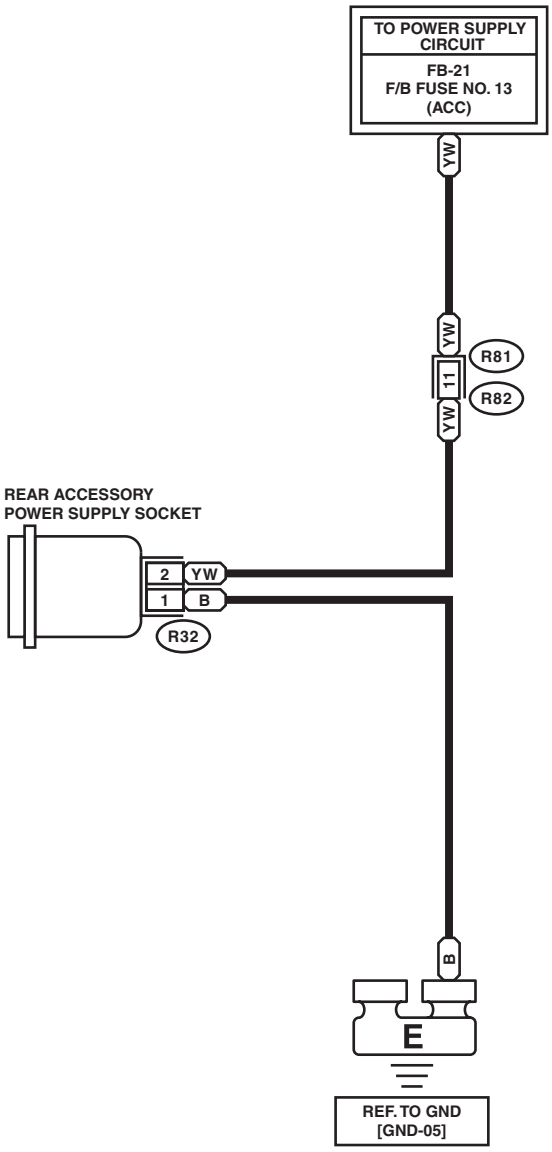

RAPS-01

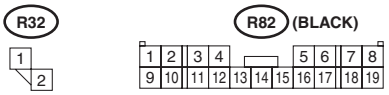

WI-34237

39.Rear Defogger System

A: WIRING DIAGRAM

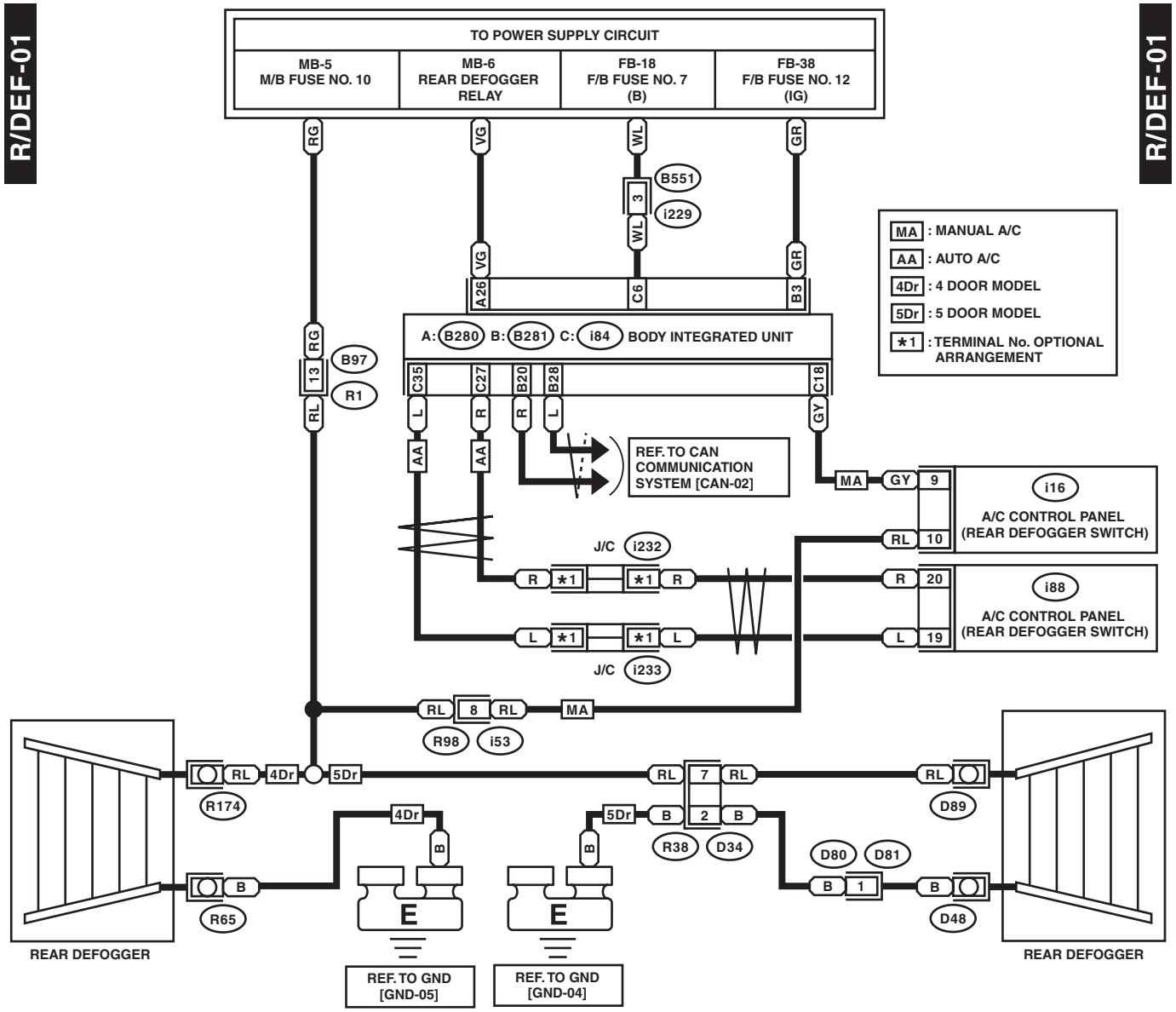

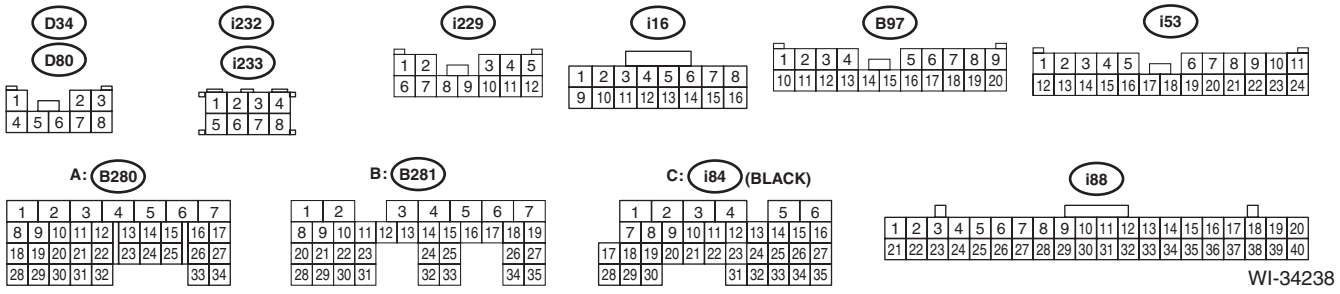

WI-34238

40.Rearview Camera System

A: WIRING DIAGRAM

1. 4 DOOR MODEL (6.2 INCH DISPLAY)

RVCAM(S6)-01

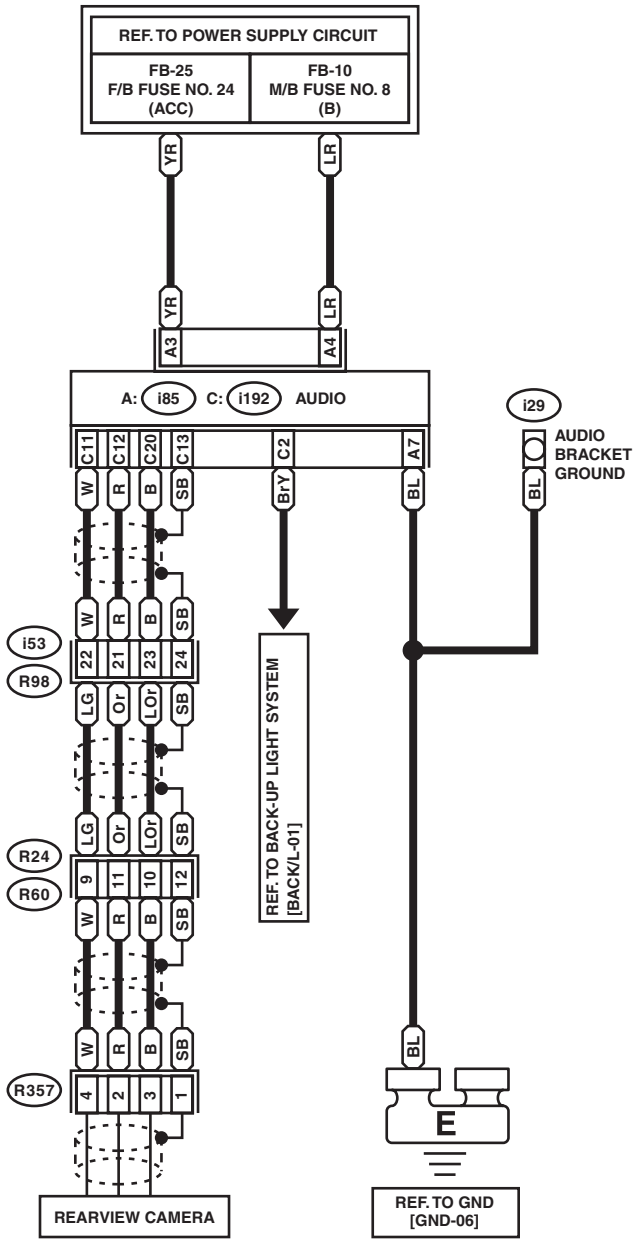

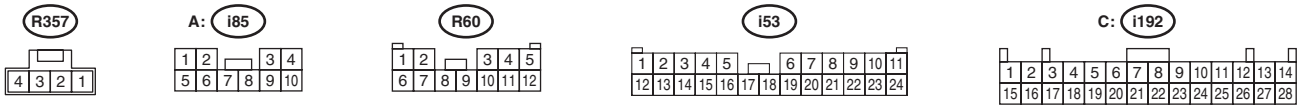

WI-48297

2. 4 DOOR MODEL (7 INCH DISPLAY)

RVCAM(S7)-01

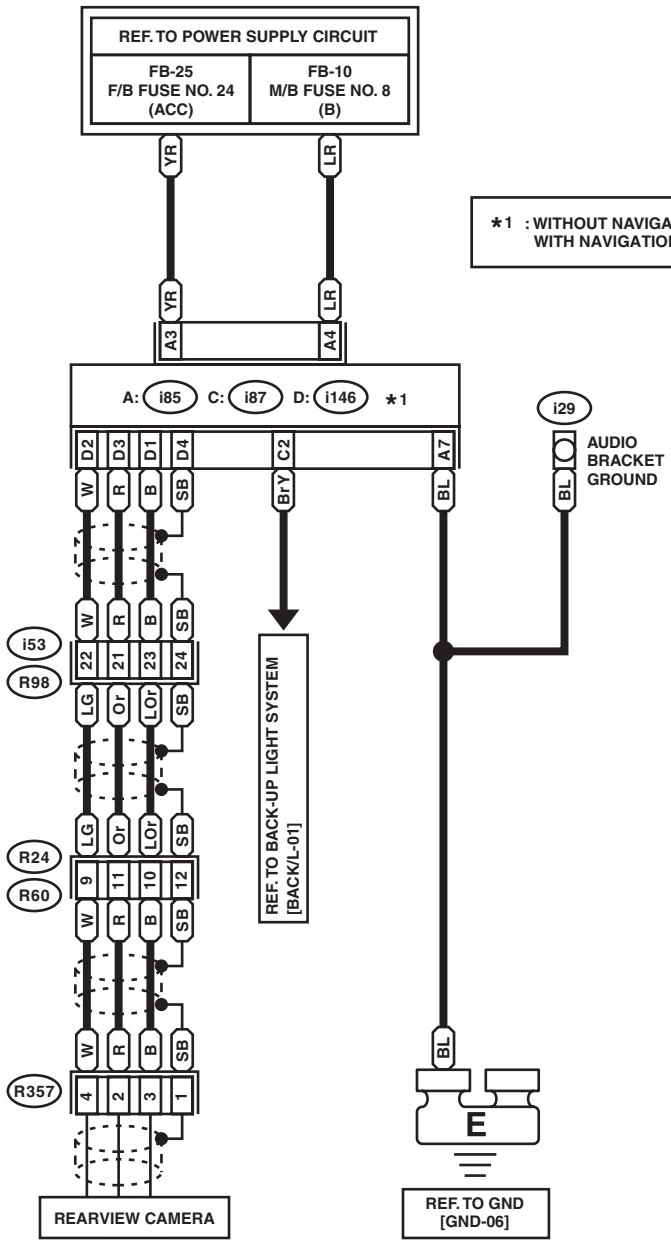

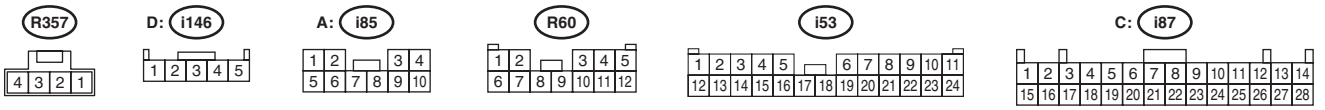

WI-48298

3. 5 DOOR MODEL (6.2 INCH DISPLAY)

RVCAM(W6)-01

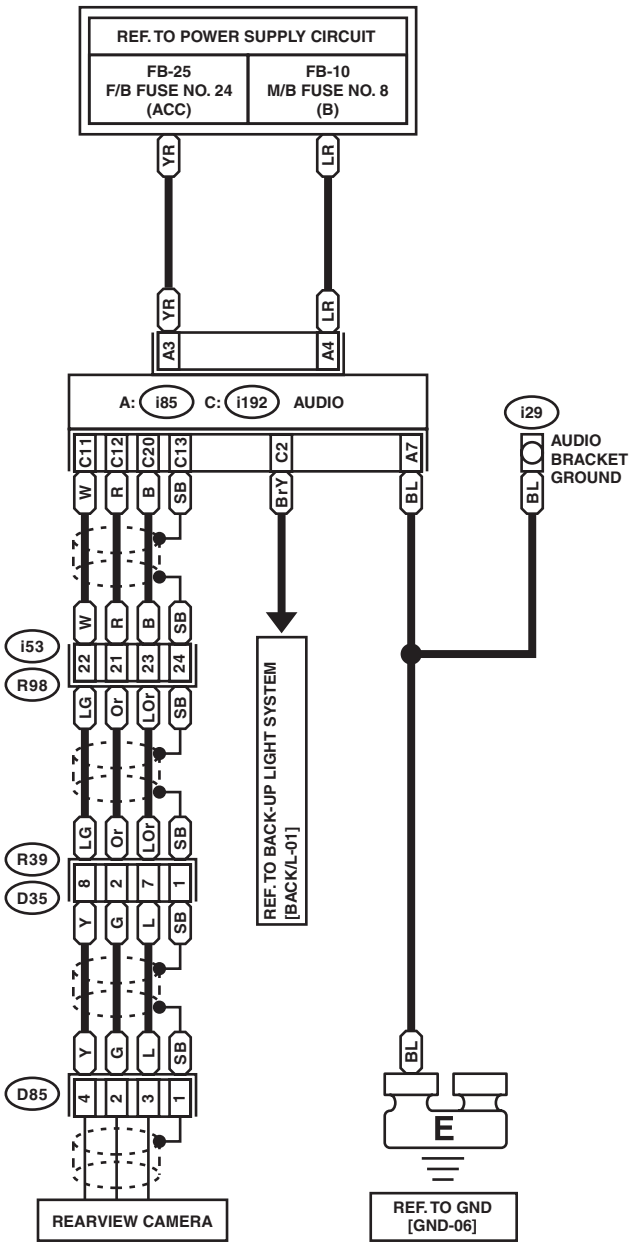

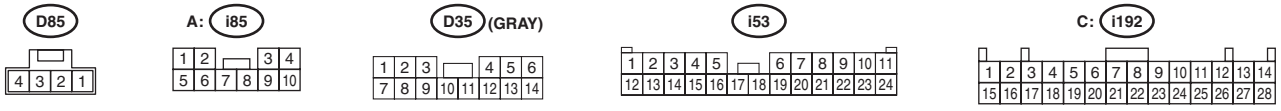

WI-48299

4. 5 DOOR MODEL (7 INCH DISPLAY)

RVCAM(W7)-01

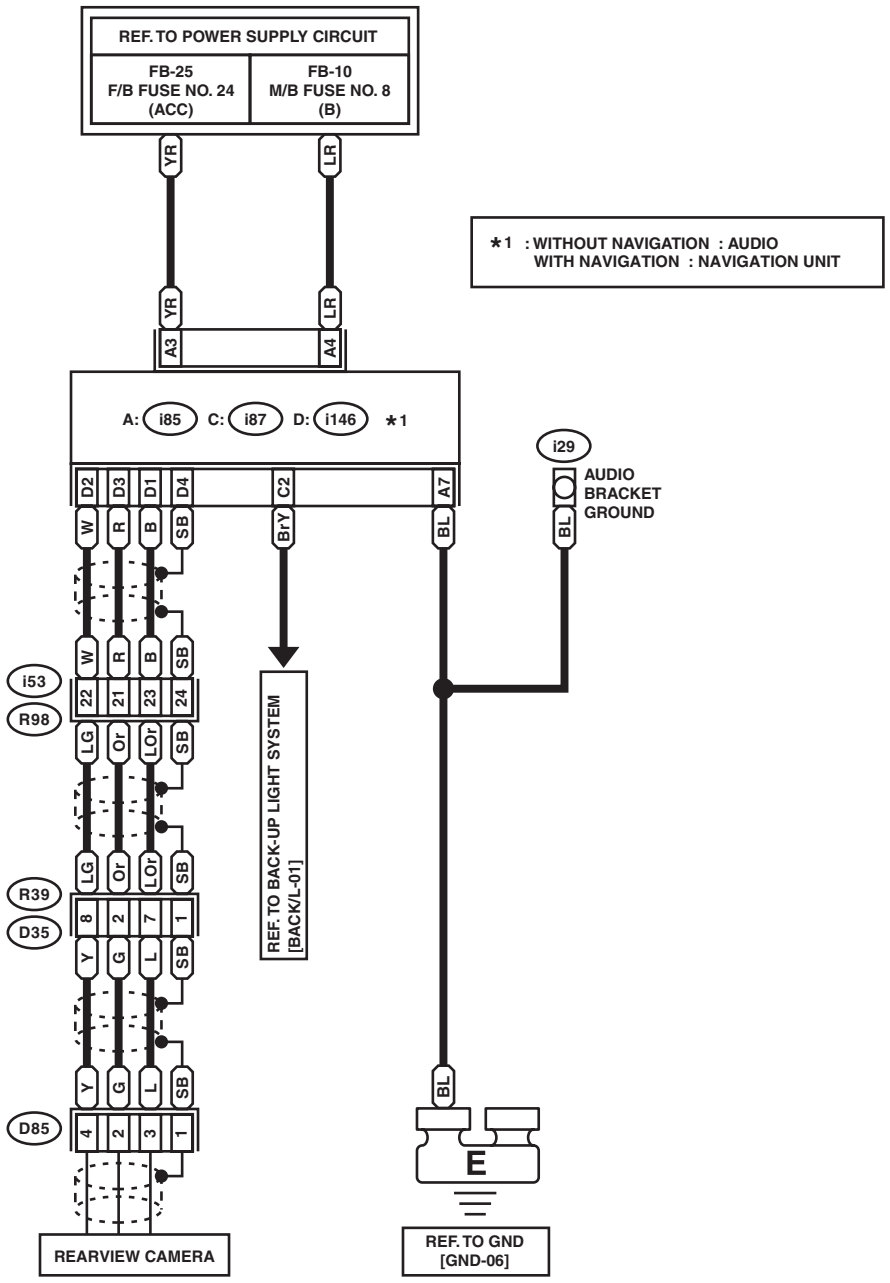

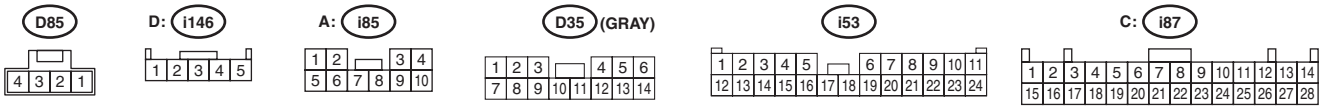

WI-48300

41.Rearview Mirror System

A: WIRING DIAGRAM

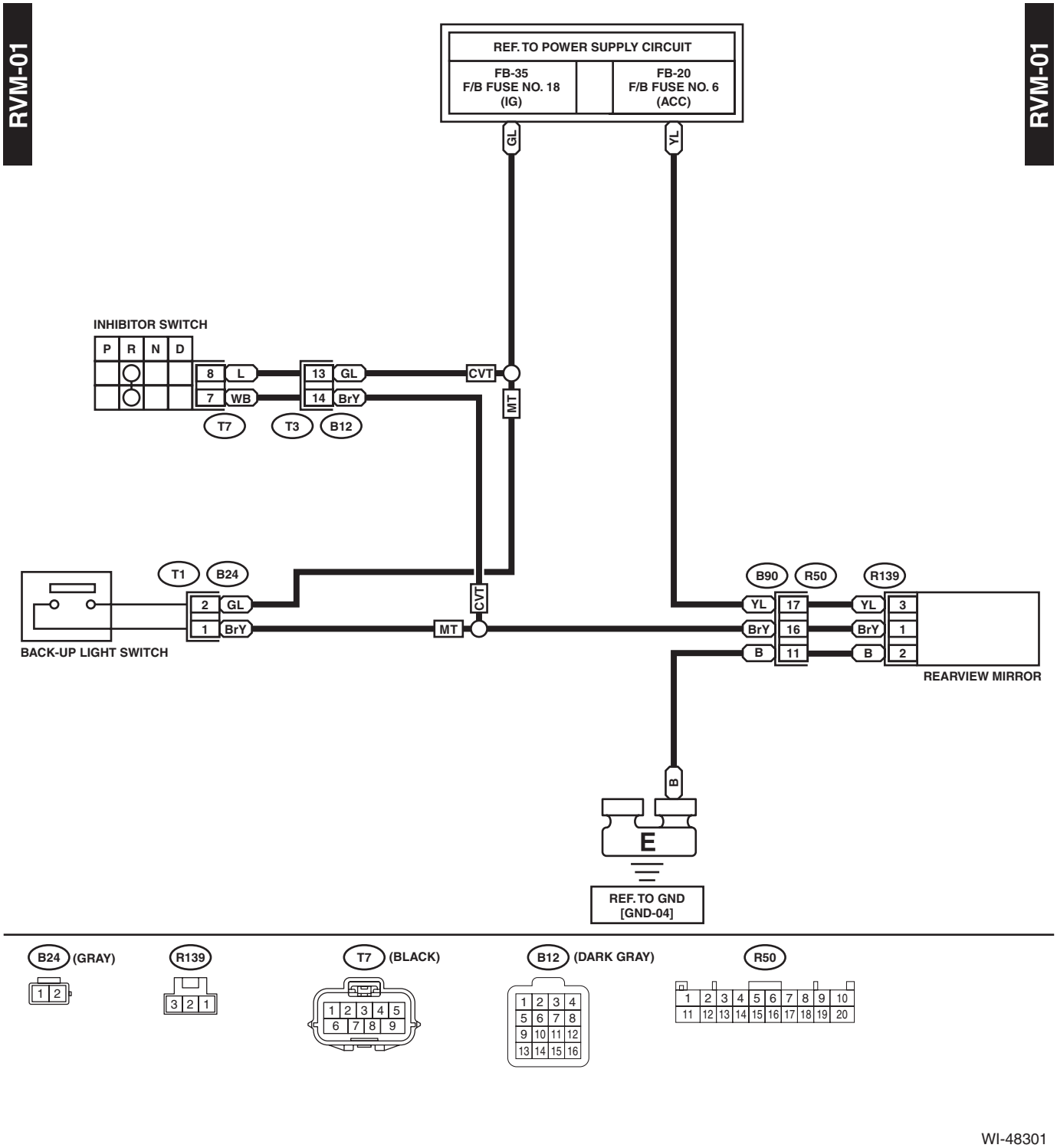

WI-48301

42.Rear Wiper and Washer System

A: WIRING DIAGRAM

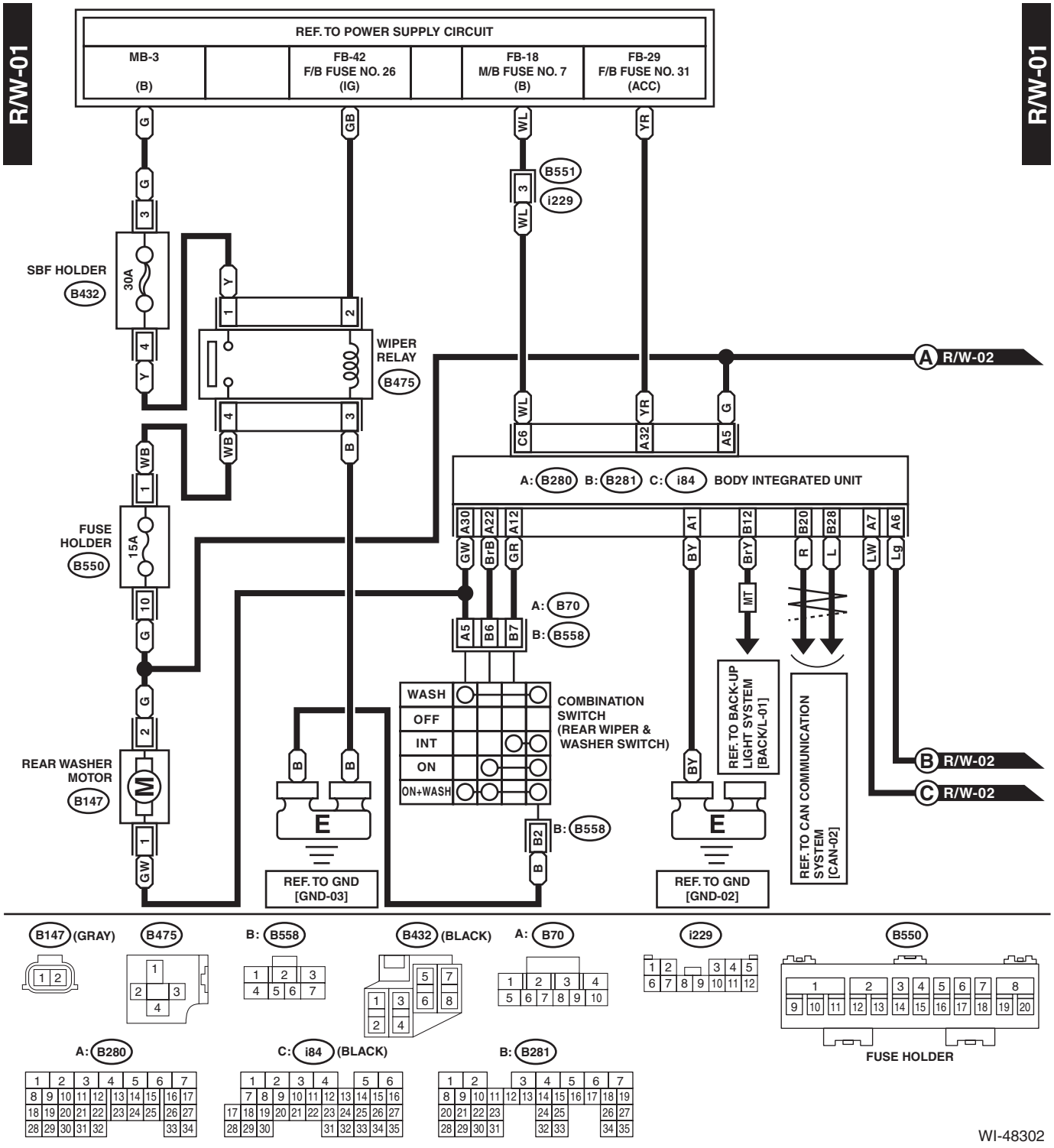

WI-48302

WIRING SYSTEM

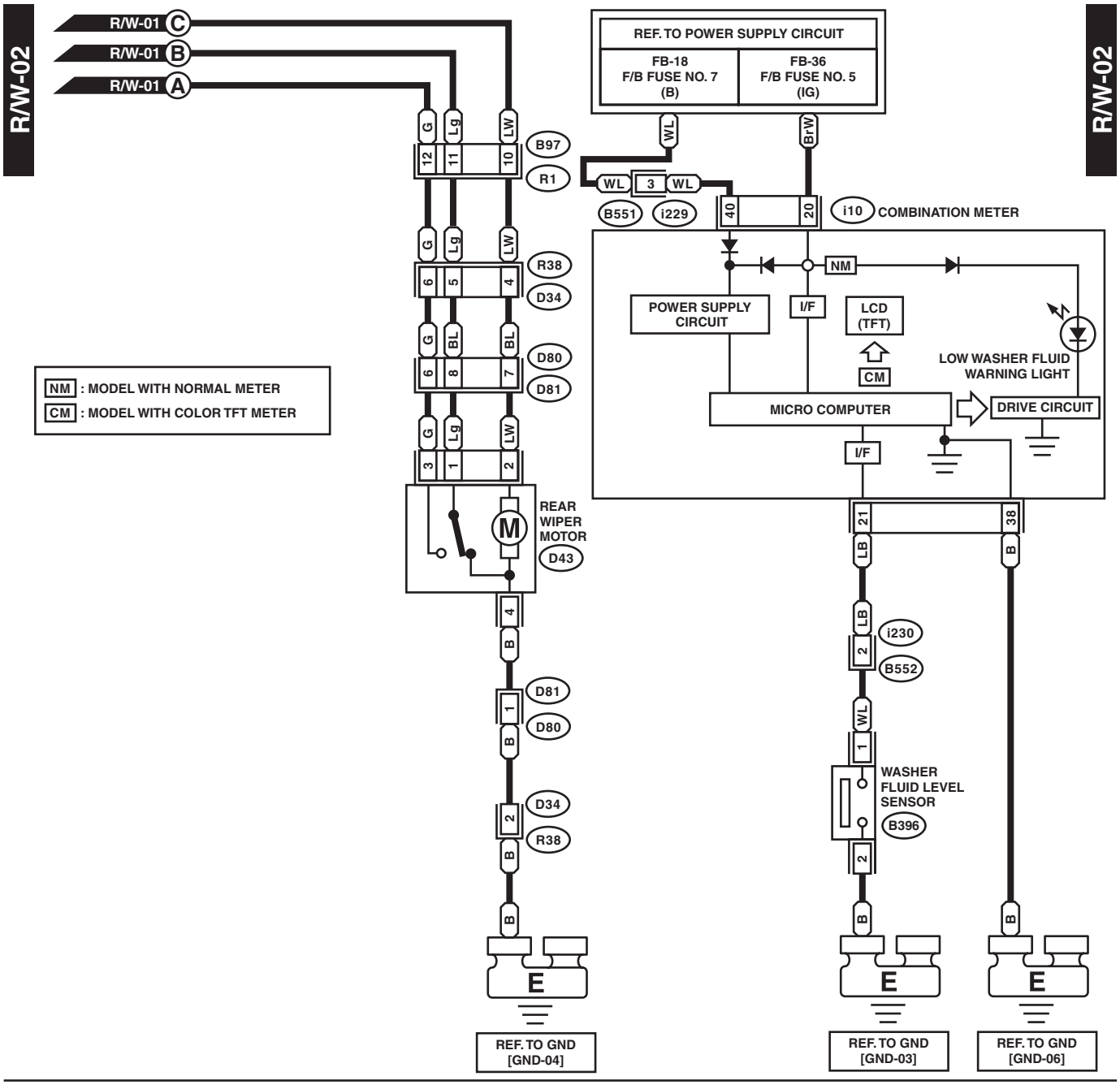

WI-48303

43.Remote Control Mirror System

A: WIRING DIAGRAM

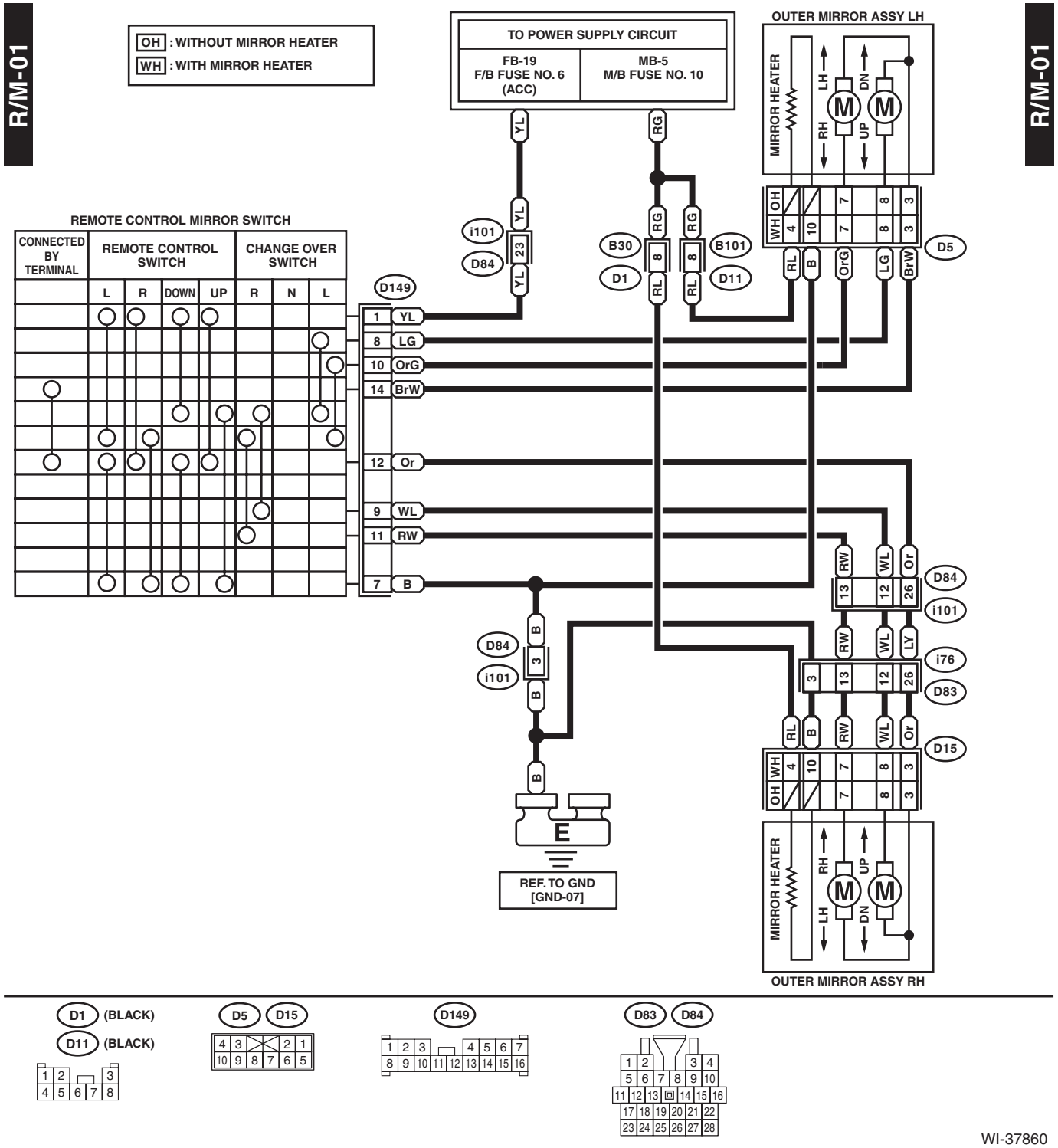

WI-37860

44.Remote Engine Start System

A: WIRING DIAGRAM

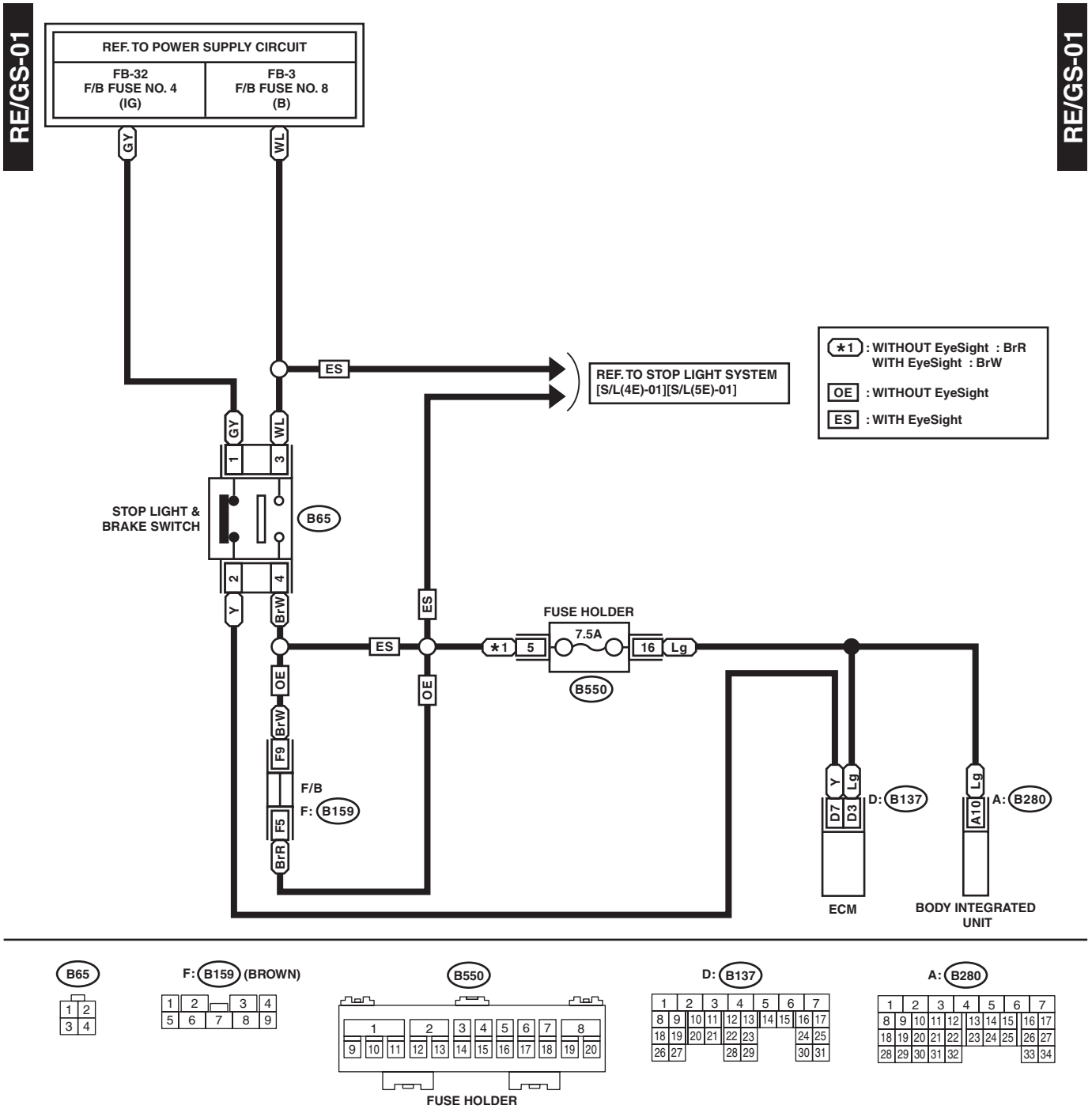

WI-48304

RE/GS-02

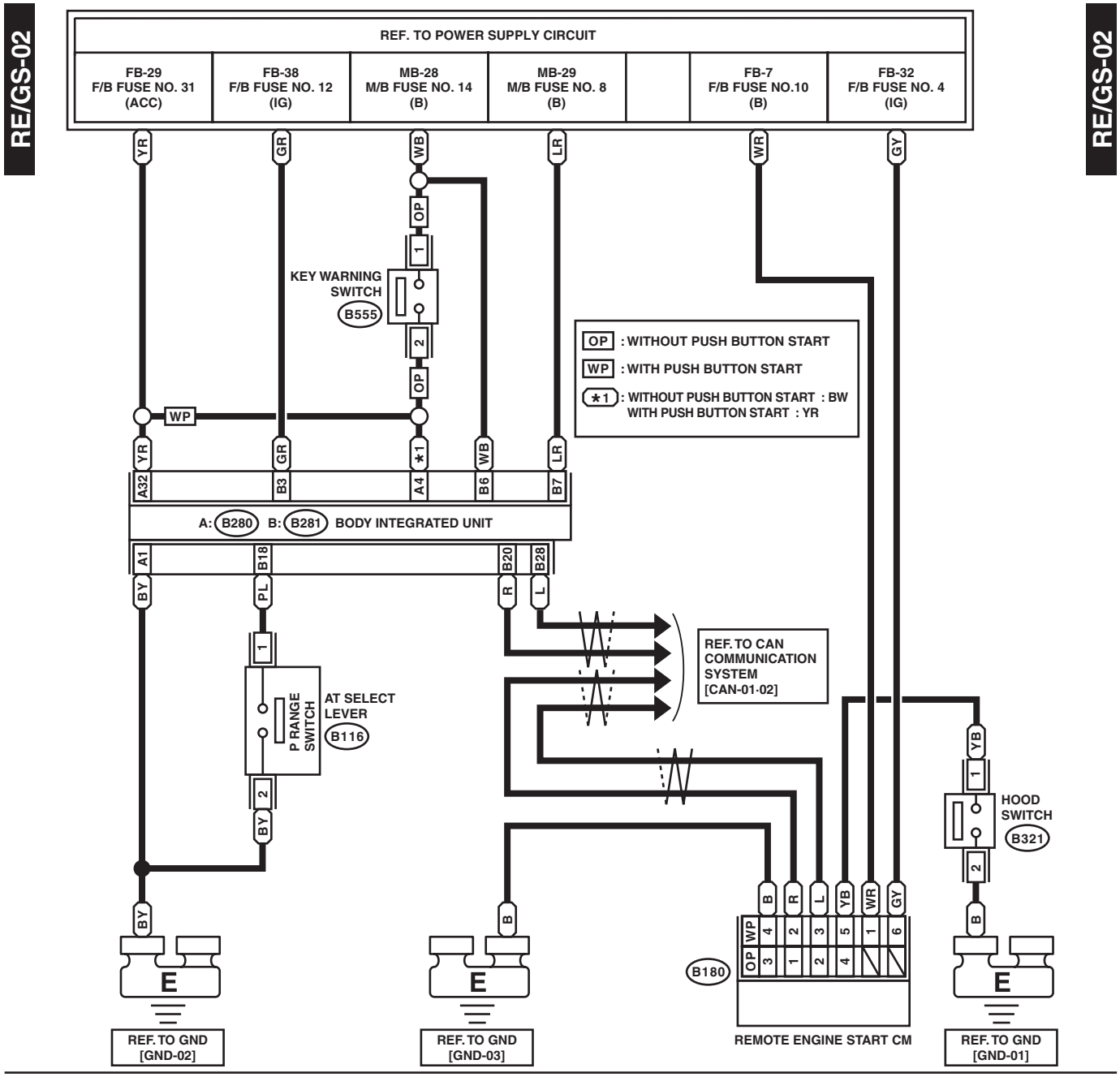

WI-48305

WIRING SYSTEM

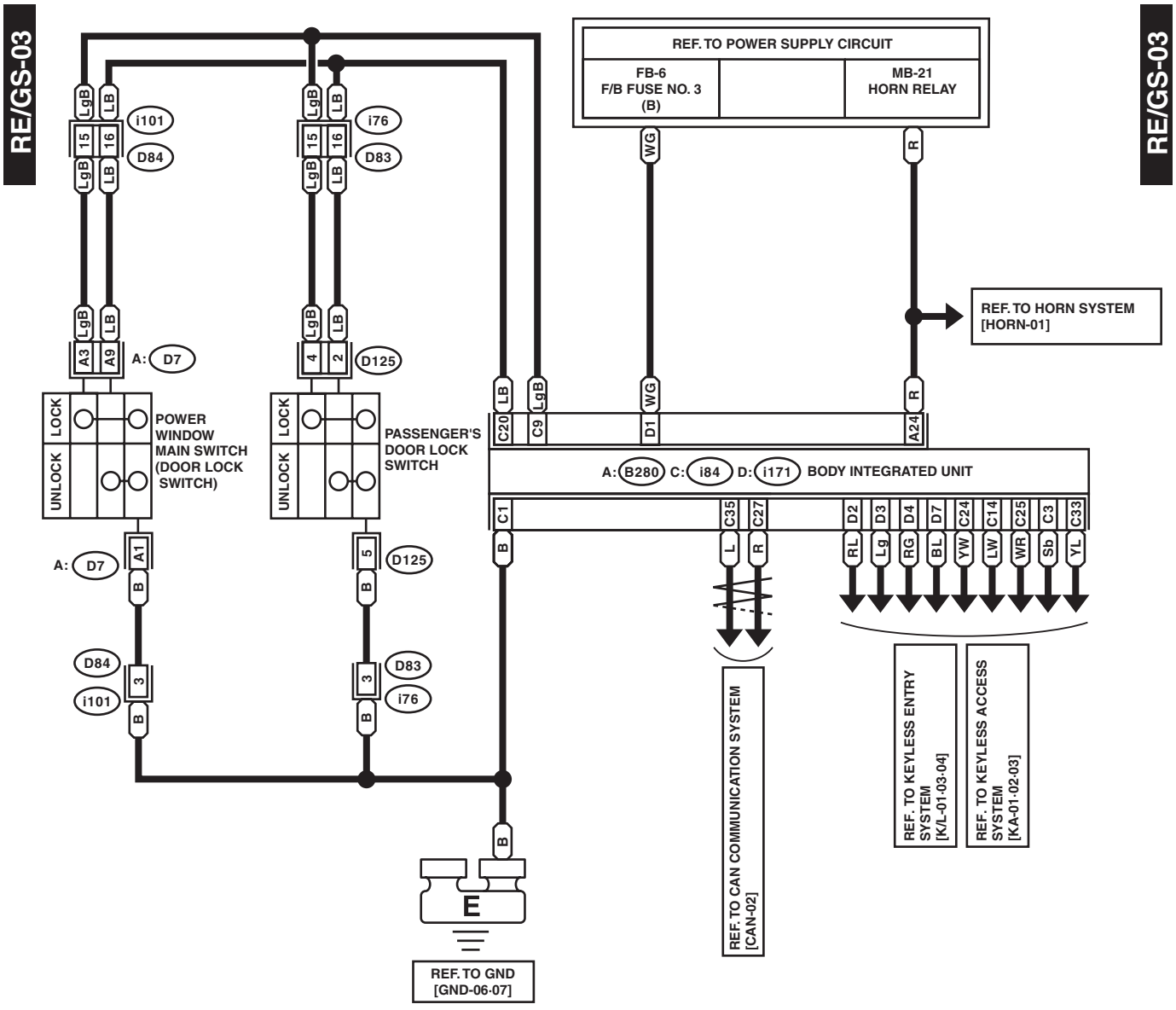

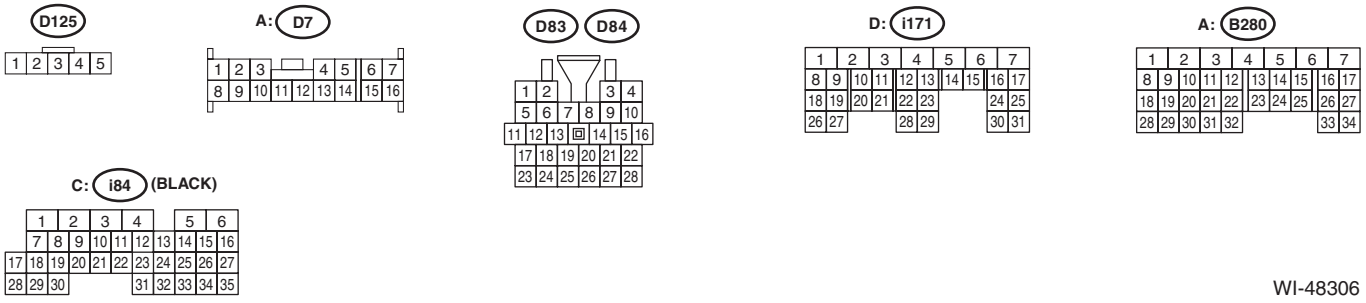

WI-48306

45.Seat Belt Warning System

A: WIRING DIAGRAM

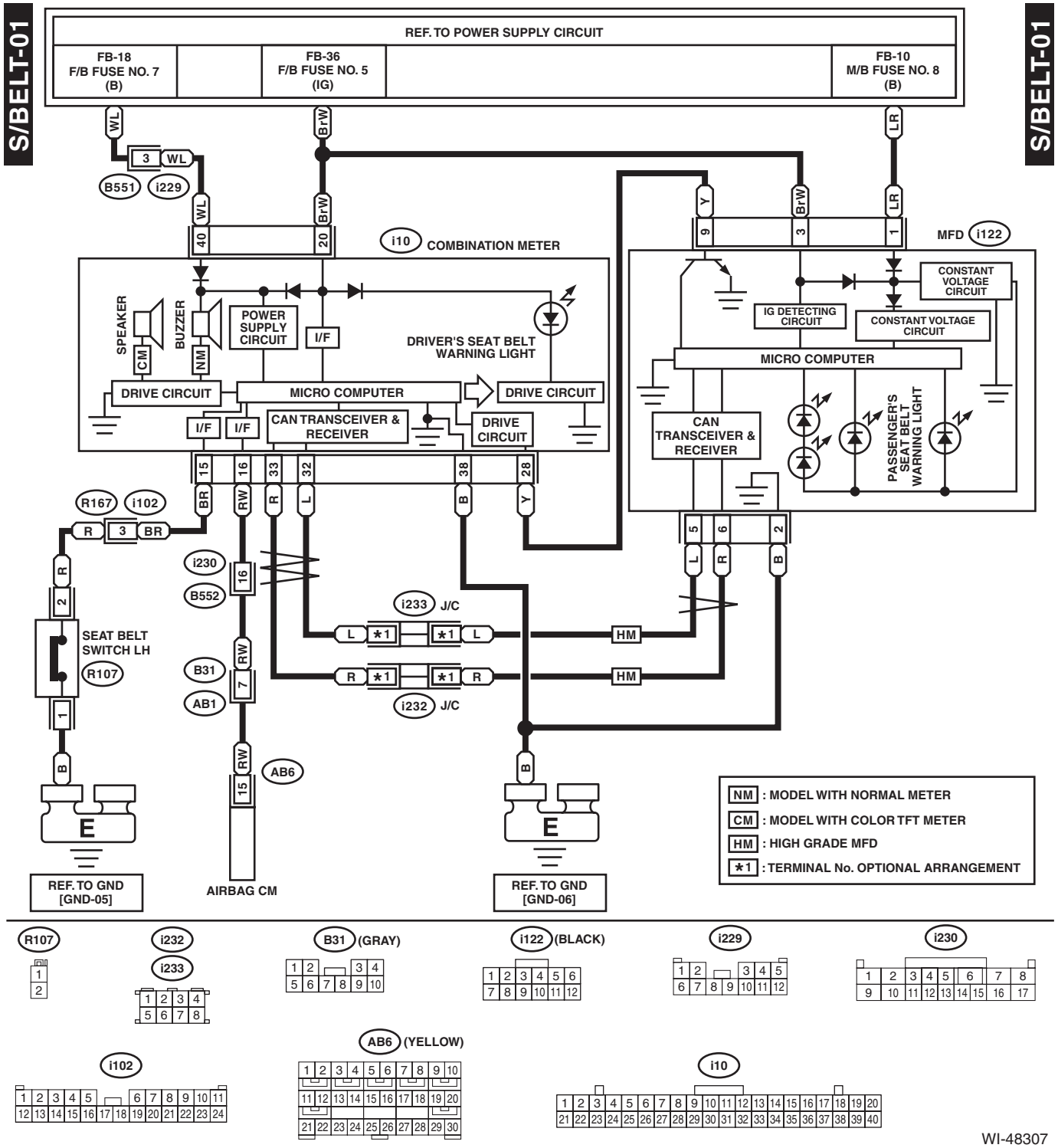

WI-48307

46.Seat Heater System

A: WIRING DIAGRAM

S/H-01

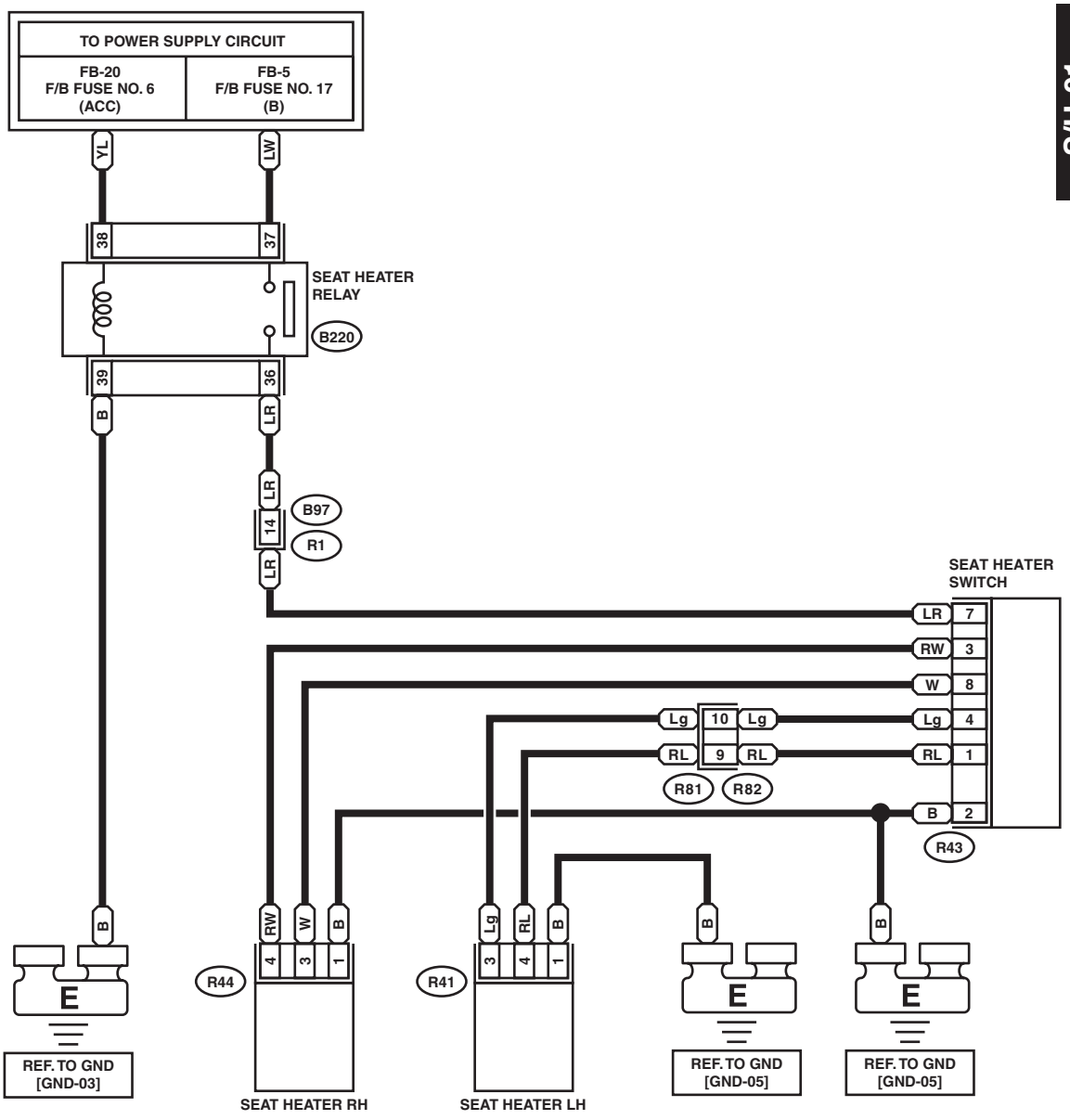

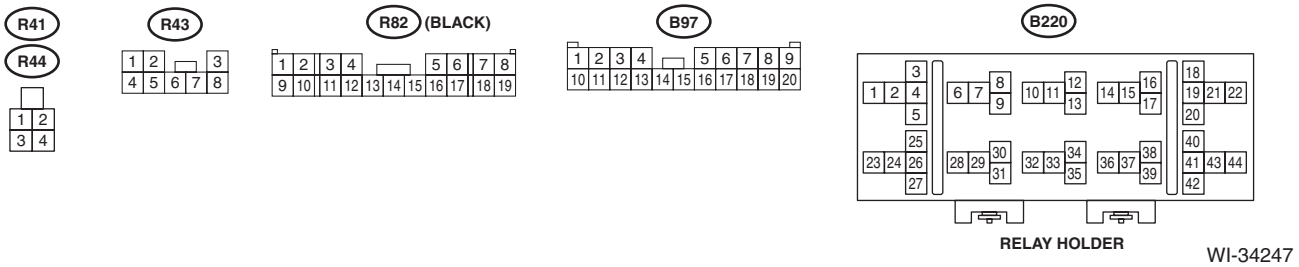

WI-34247

47.Security System

A: WIRING DIAGRAM

1. WITHOUT PUSH BUTTON START

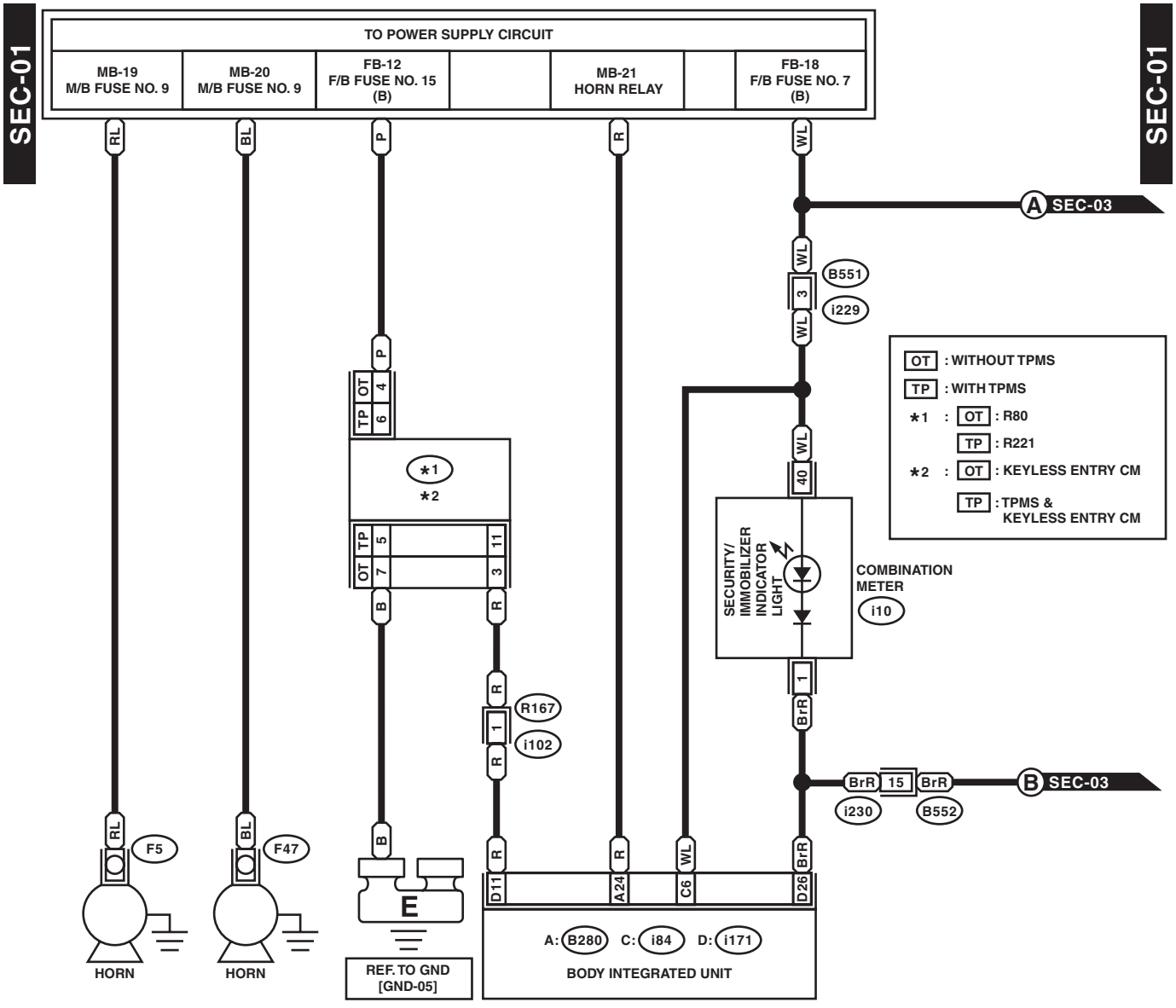

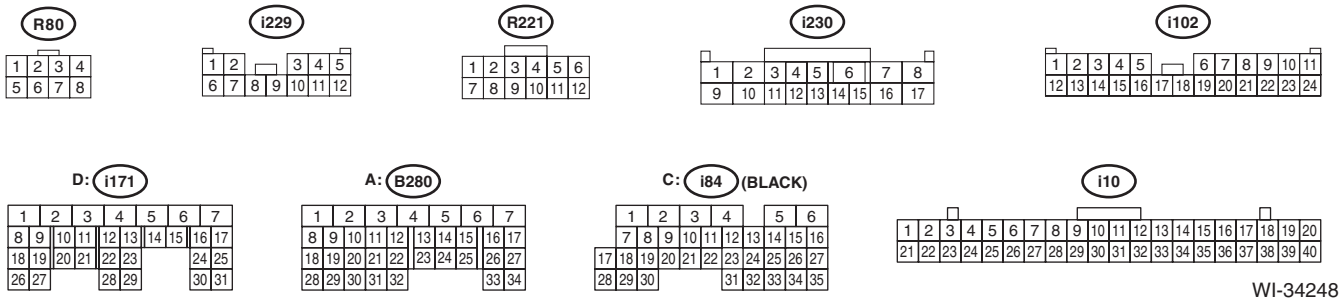

WI-34248

SEC-02

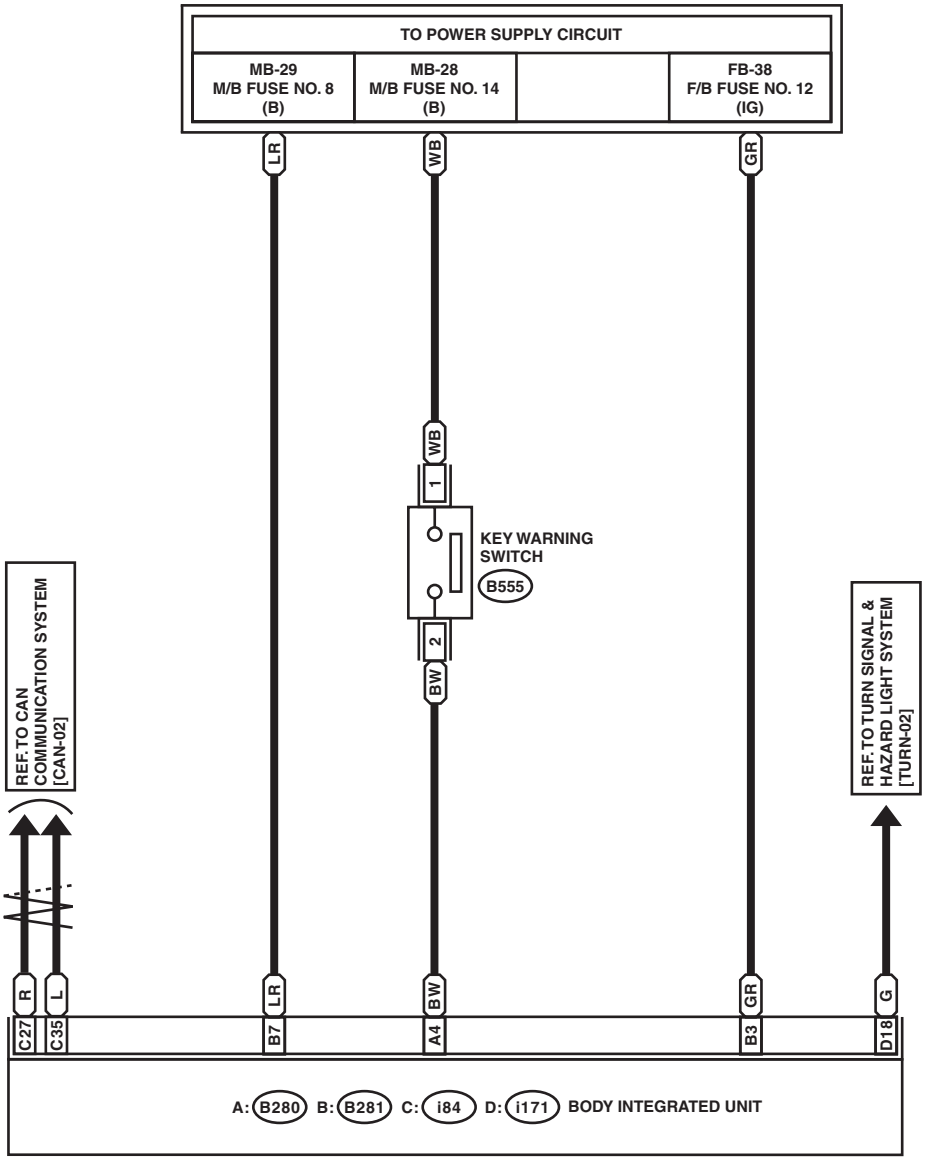

SEC-02

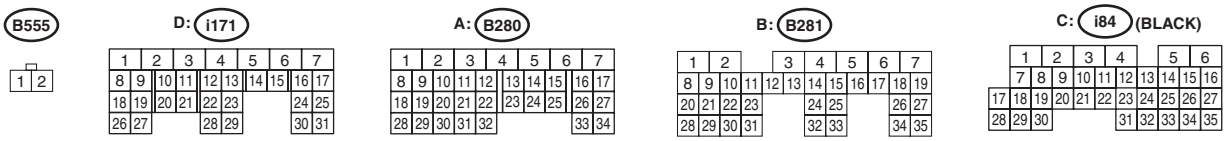

WI-34249

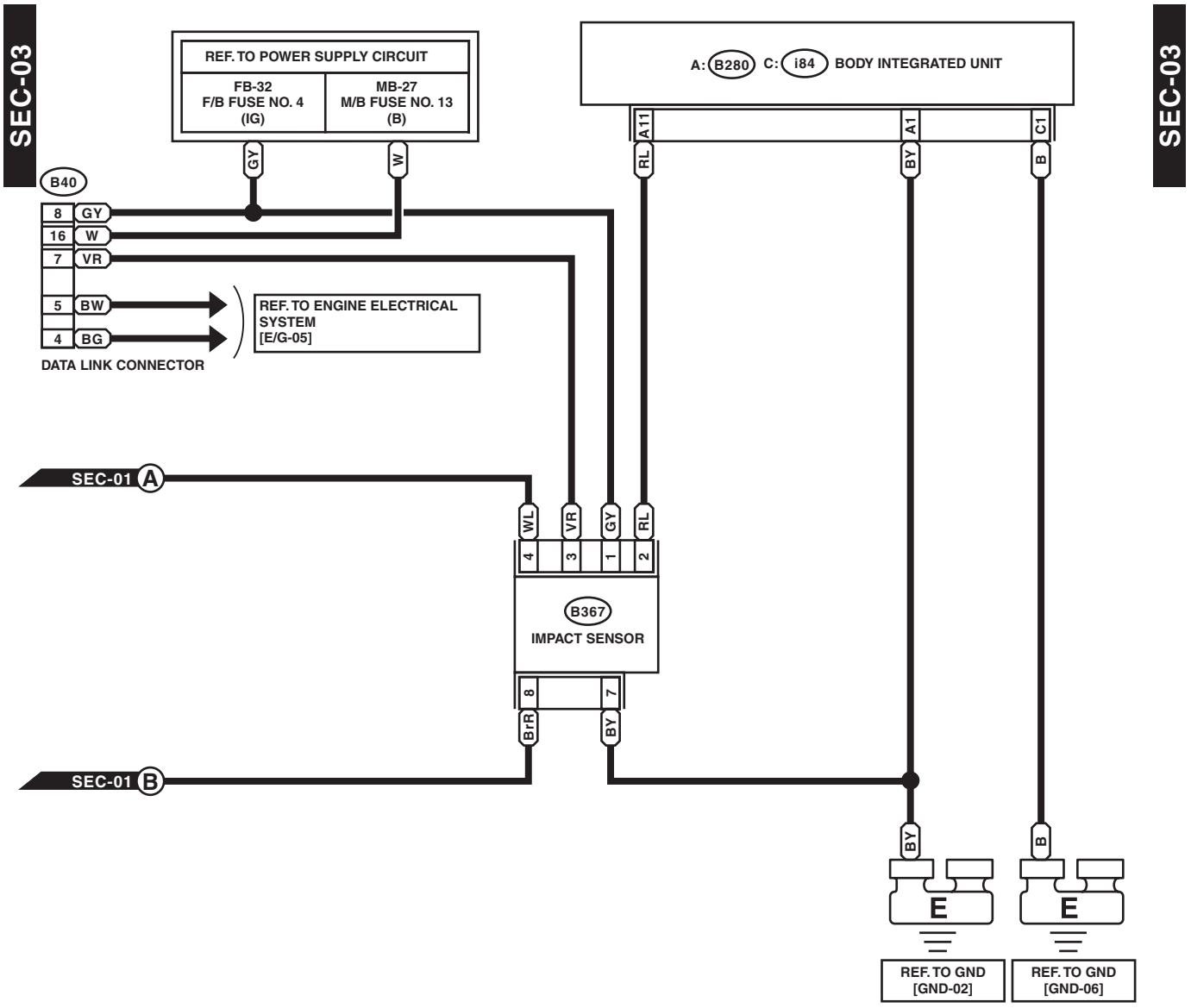
SEC-03
SEC-03
REF. TO POWER SUPPLY CIRCUIT
FB-32
F/B FUSE NO. 4
(IG)
MB-27
M/B FUSE NO. 13
(B)
GY
W
A: B280 C: i84 BODY INTEGRATED UNIT
A11
A1
C1
RL
BY
B
B40
8 GY
16 W
7 VR
5 BW
4 BG
DATA LINK CONNECTOR
REF. TO ENGINE ELECTRICAL SYSTEM [E/G-05]
SEC-01 A
WL
VR
GY
RL
4
3
1
2
B367
IMPACT SENSOR
8
7
BrR
BY
SEC-01 B
BY
B
E
E
REF. TO GND [GND-02]
REF. TO GND [GND-06]

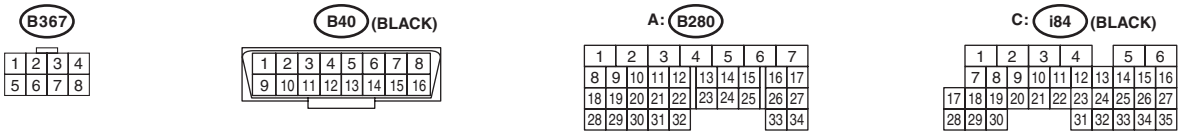
B367
1 2 3 4
5 6 7 8
B40 (BLACK)
1 2 3 4 5 6 7 8
9 10 11 12 13 14 15 16
A: B280
1 2 3 4 5 6 7
8 9 10 11 12 13 14 15 16 17
18 19 20 21 22 23 24 25 26 27
28 29 30 31 32 33 34
C: i84 (BLACK)
1 2 3 4 5 6
7 8 9 10 11 12 13 14 15 16
17 18 19 20 21 22 23 24 25 26 27
28 29 30 31 32 33 34 35

WI-48308

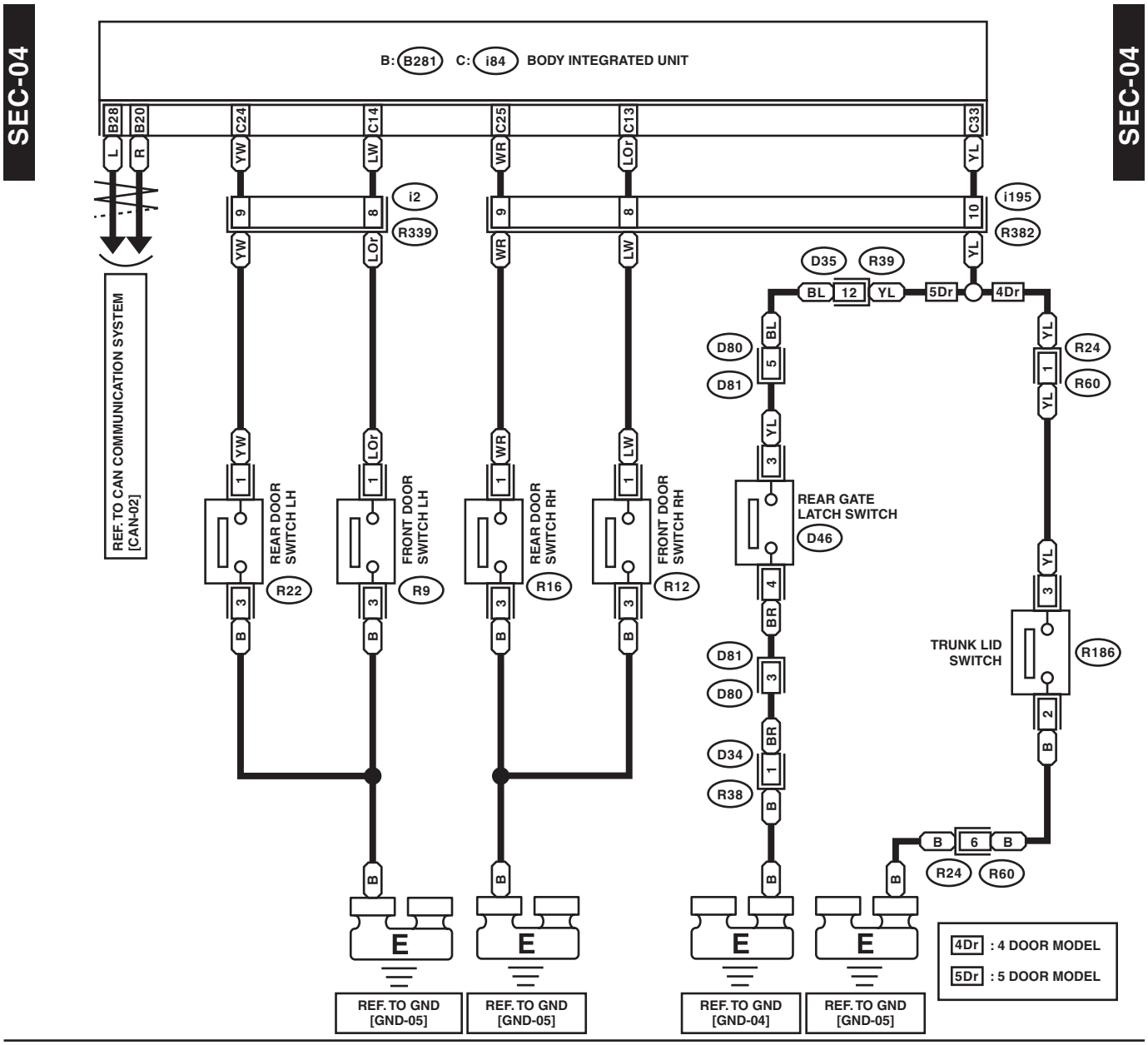
SEC-04
SEC-04
B: B281 C: i84 BODY INTEGRATED UNIT
B28
B20
C24
C14
C25
C13
C33
L
R
YW
LW
WR
LOr
YL
i2
R339
i195
R382
REF. TO CAN COMMUNICATION SYSTEM [CAN-02]
REAR DOOR SWITCH LH
R22
FRONT DOOR SWITCH LH
R9
REAR DOOR SWITCH RH
R16
FRONT DOOR SWITCH RH
R12
D35
R39
BL
12
5Dr
4Dr
D80
D81
R24
R60
REAR GATE LATCH SWITCH
D46
TRUNK LID SWITCH
R186
D34
R38
B
6
E
REF. TO GND [GND-05]
REF. TO GND [GND-05]
REF. TO GND [GND-04]
REF. TO GND [GND-05]
4Dr : 4 DOOR MODEL
5Dr : 5 DOOR MODEL
R9
R16
R12
R22
R186
D46
D34
D80
i2
i195
R60
D35 (GRAY)
B: B281
C: i84 (BLACK)

WI-48309

2. WITH PUSH BUTTON START

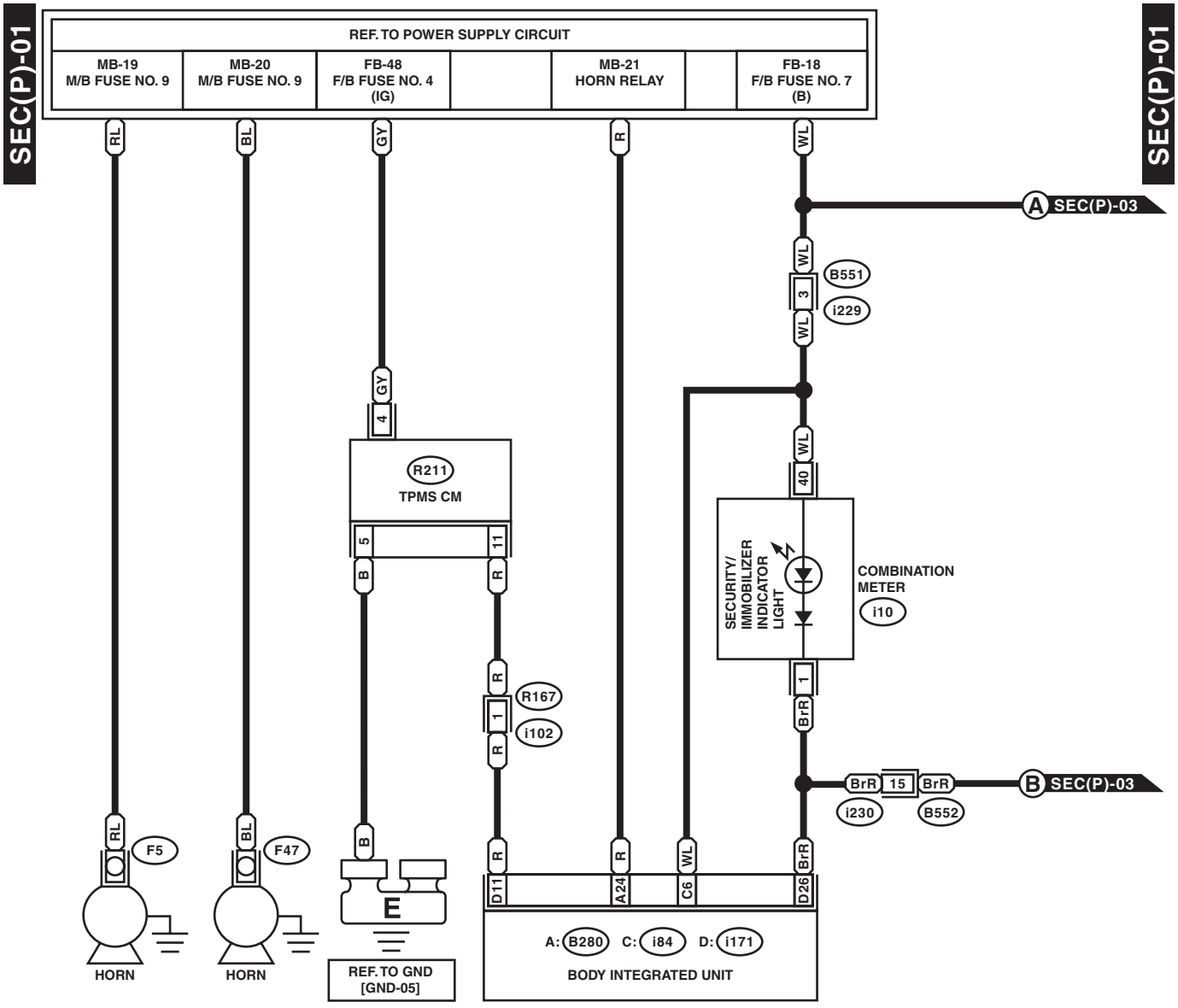

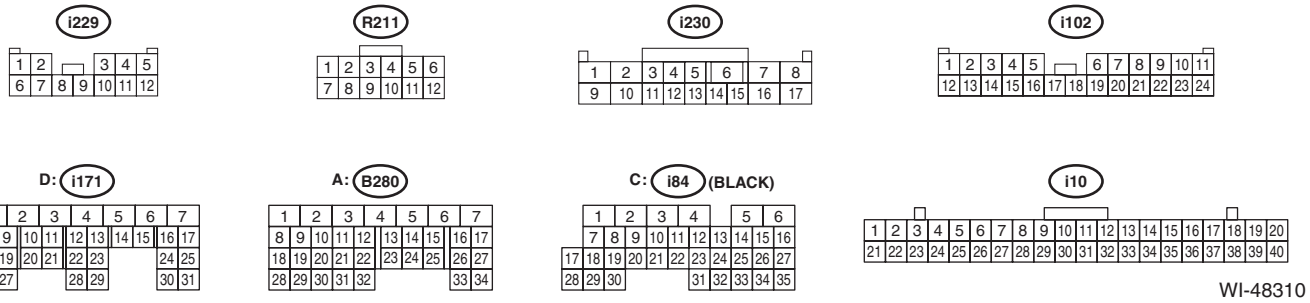

WI-48310

SEC(P)-02

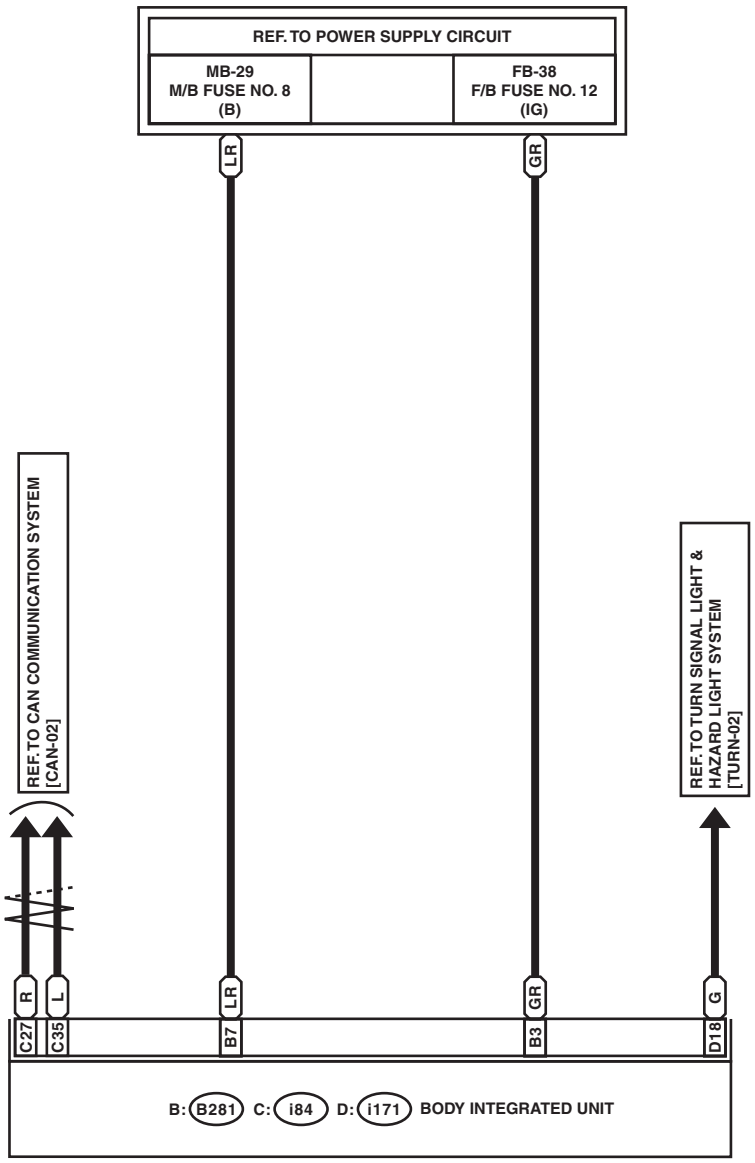

SEC(P)-02

D: i171

1	2	3	4	5	6	7
8	9	10	11	12	13	14	15	16	17
18	19	20	21	22	23	24	25
26	27	28	29	30	31

B: B281

1	2	3	4	5	6	7
8	9	10	11	12	13	14	15	16	17	18	19
20	21	22	23	24	25	26	27
28	29	30	31	32	33	34	35

C: i84 (BLACK)

1	2	3	4	5	6
7	8	9	10	11	12	13	14	15	16
17	18	19	20	21	22	23	24	25	26	27
28	29	30	31	32	33	34	35

WI-48311

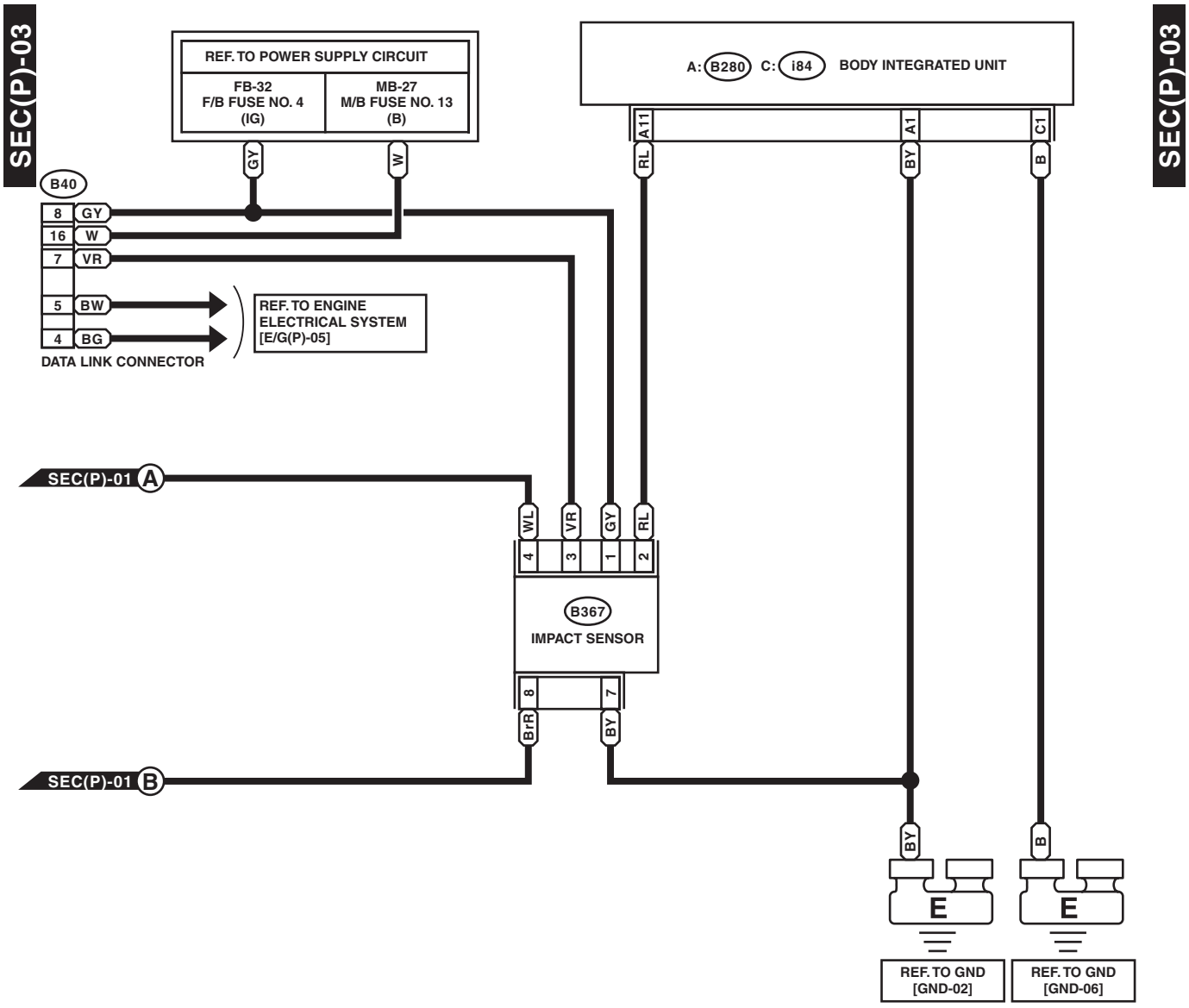
SEC(P)-03
SEC(P)-03
REF. TO POWER SUPPLY CIRCUIT
FB-32
F/B FUSE NO. 4
(IG)
MB-27
M/B FUSE NO. 13
(B)
A: B280 C: i84 BODY INTEGRATED UNIT
A11
A1
C1
RL
BY
B
GY
W
B40
8 GY
16 W
7 VR
5 BW
4 BG
DATA LINK CONNECTOR
REF. TO ENGINE
ELECTRICAL SYSTEM
[E/G(P)-05]
SEC(P)-01 A
SEC(P)-01 B
WL
VR
GY
RL
4
3
1
2
B367
IMPACT SENSOR
8
7
BrR
BY
BY
B
E
E
REF. TO GND
[GND-02]
REF. TO GND
[GND-06]

B367
1 2 3 4
5 6 7 8

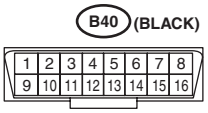
B40 (BLACK)
1 2 3 4 5 6 7 8
9 10 11 12 13 14 15 16

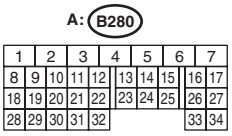
A: B280
1 2 3 4 5 6 7
8 9 10 11 12 13 14 15 16 17
18 19 20 21 22 23 24 25 26 27
28 29 30 31 32 33 34

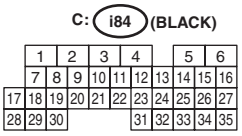
C: i84 (BLACK)
1 2 3 4 5 6
7 8 9 10 11 12 13 14 15 16
17 18 19 20 21 22 23 24 25 26 27
28 29 30 31 32 33 34 35

WI-48312

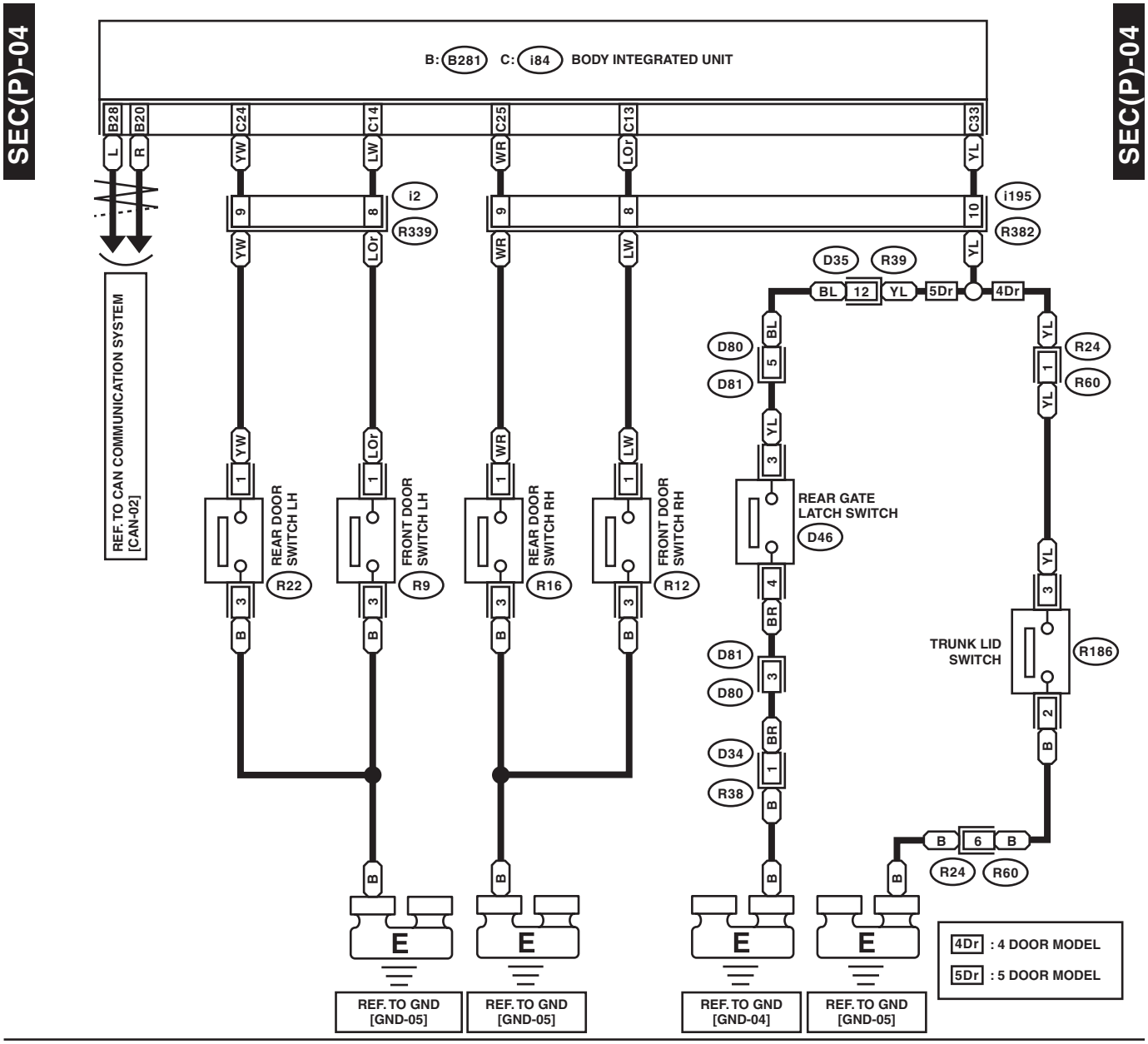
SEC(P)-04
SEC(P)-04
B: B281 C: i84 BODY INTEGRATED UNIT
B28
B20
C24
C14
C25
C13
C33
L
R
YW
LW
WR
LOr
YL
i2
R339
i195
R382
D35
R39
BL
12
5Dr
4Dr
D80
D81
R24
R60
REF. TO CAN COMMUNICATION SYSTEM [CAN-02]
REAR DOOR SWITCH LH
R22
FRONT DOOR SWITCH LH
R9
REAR DOOR SWITCH RH
R16
FRONT DOOR SWITCH RH
R12
REAR GATE LATCH SWITCH
D46
TRUNK LID SWITCH
R186
D34
R38
B
6
E
REF. TO GND [GND-05]
REF. TO GND [GND-04]
4Dr : 4 DOOR MODEL
5Dr : 5 DOOR MODEL

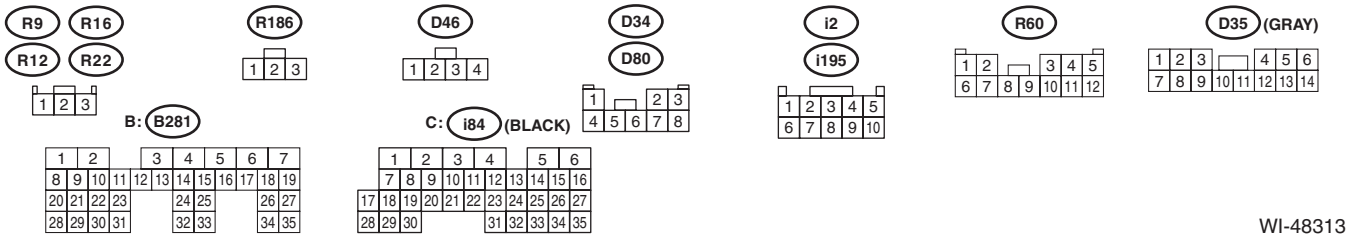
R9
R16
R12
R22
R186
D46
D34
D80
i2
i195
R60
D35 (GRAY)
B: B281
C: i84 (BLACK)

WI-48313

48.Shift Lock Control System

A: WIRING DIAGRAM

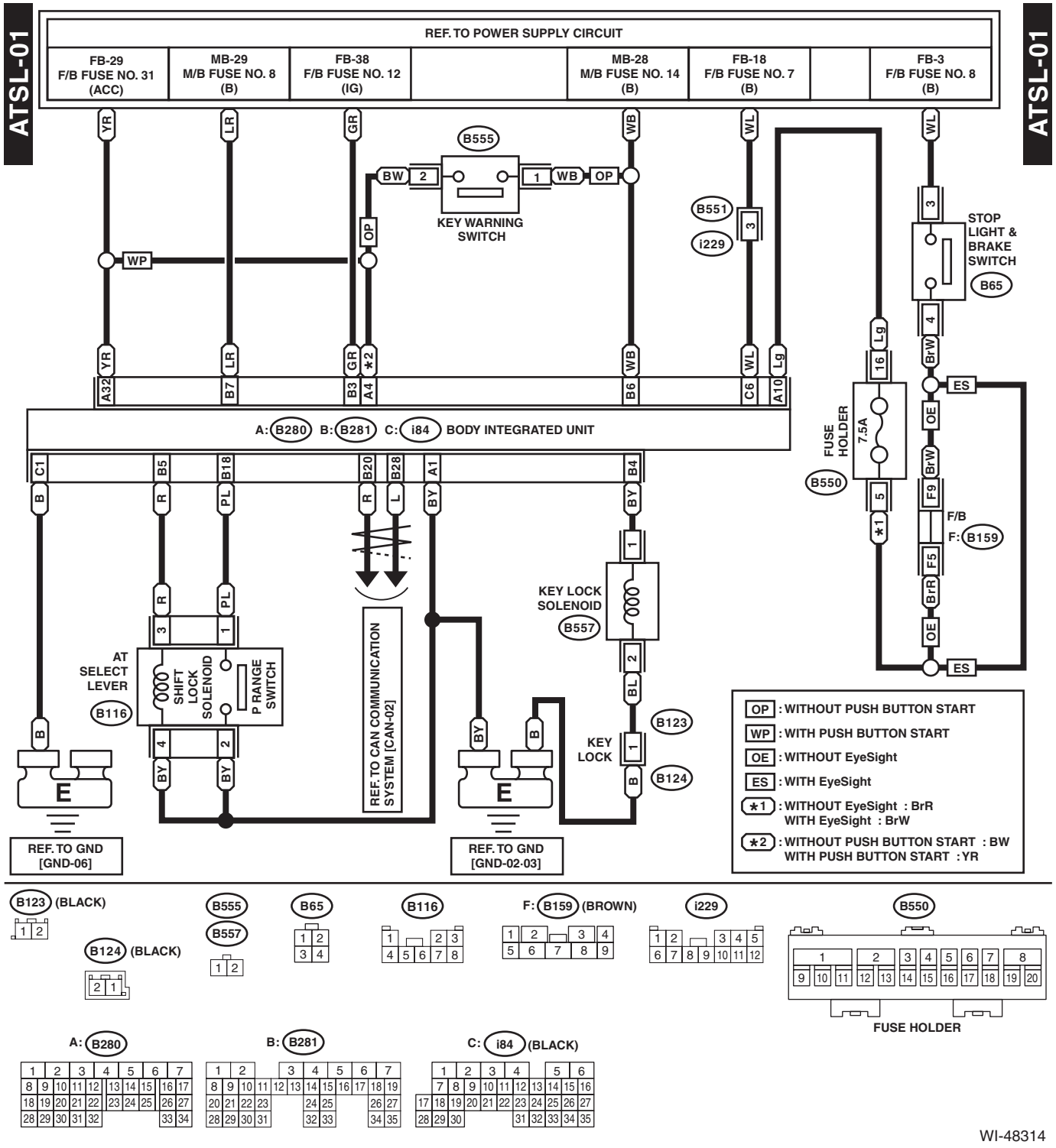

WI-48314

49.Speedometer System

A: WIRING DIAGRAM

SP-01

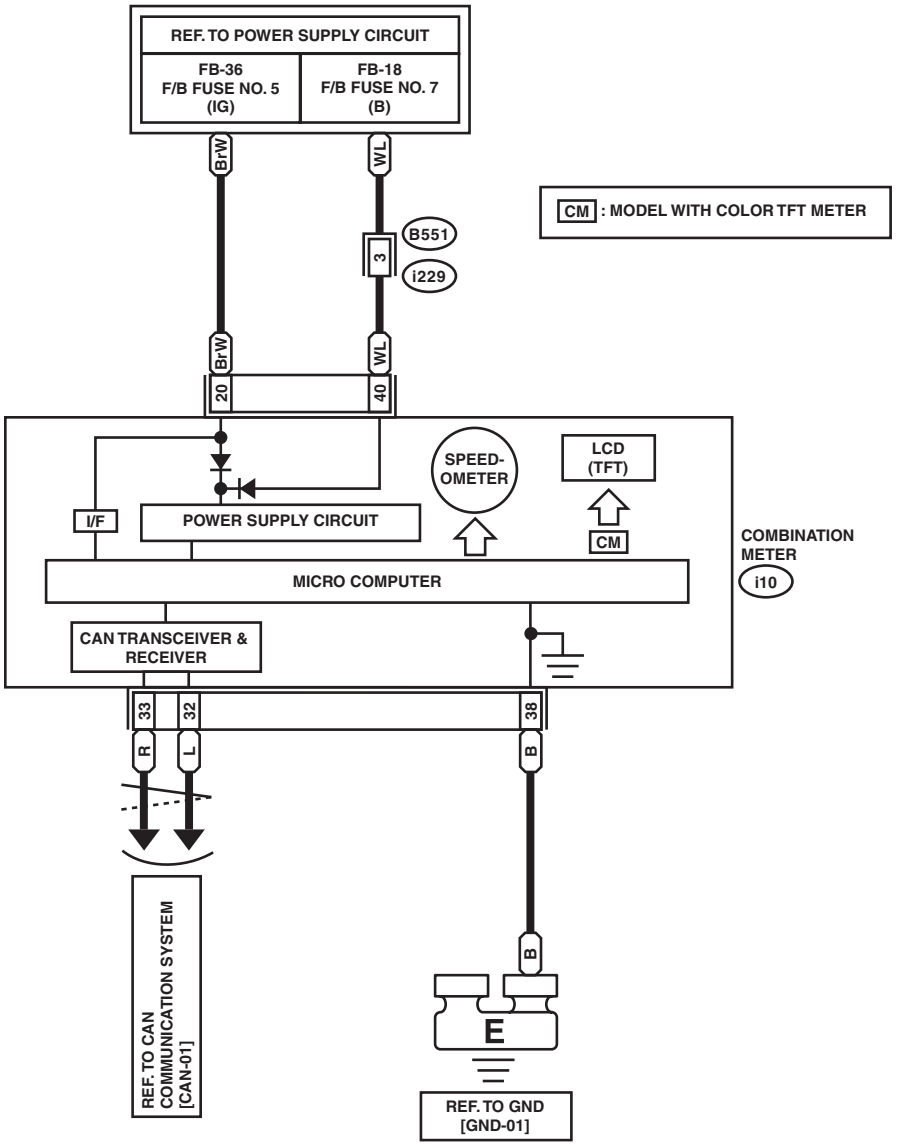

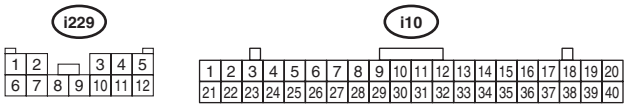

WI-48315

50.Starter System

A: WIRING DIAGRAM

1. WITHOUT PUSH BUTTON START

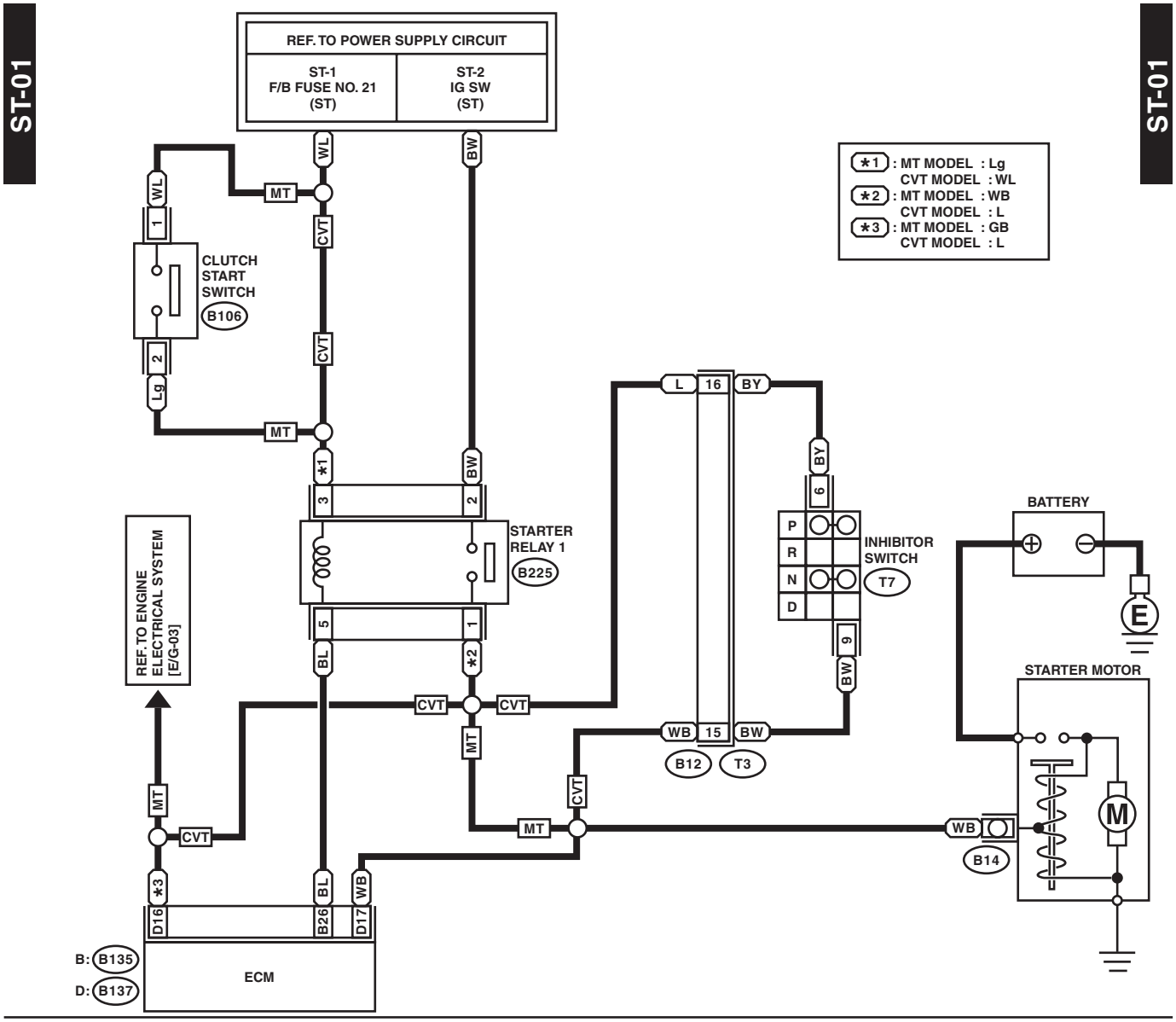

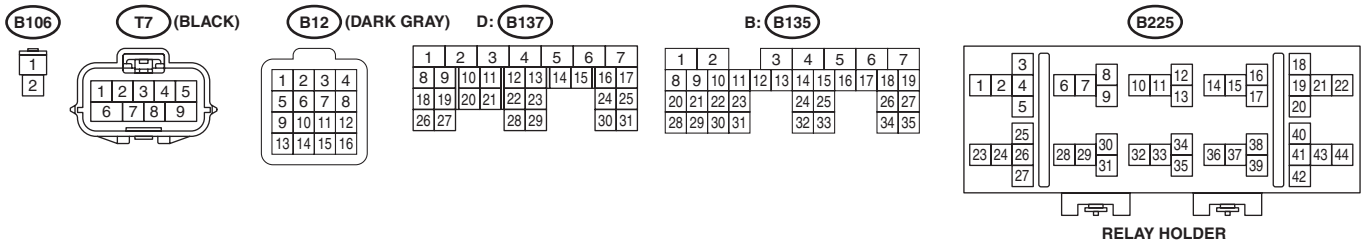

WI-48316

2. WITH PUSH BUTTON START

ST(P)-01

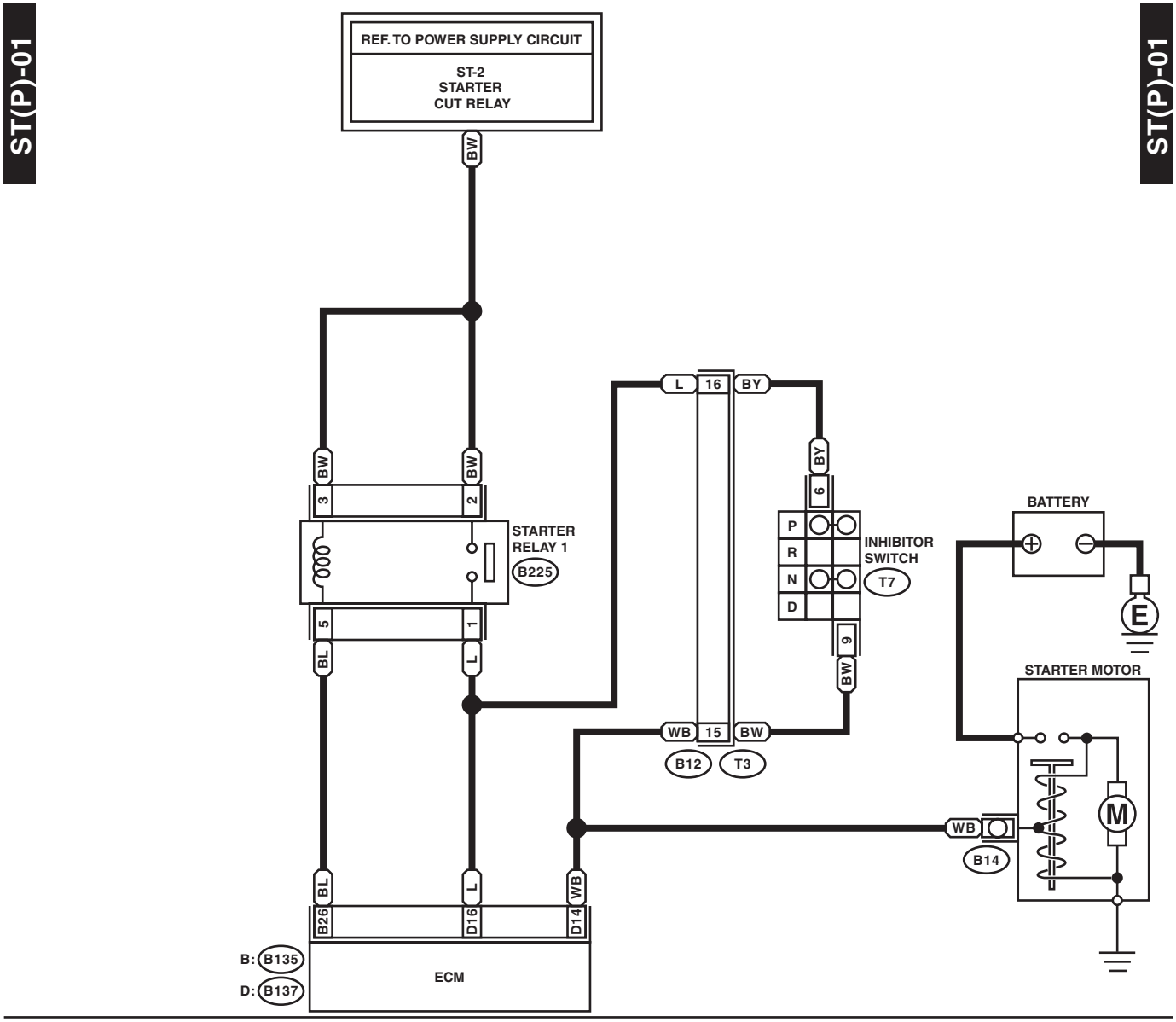

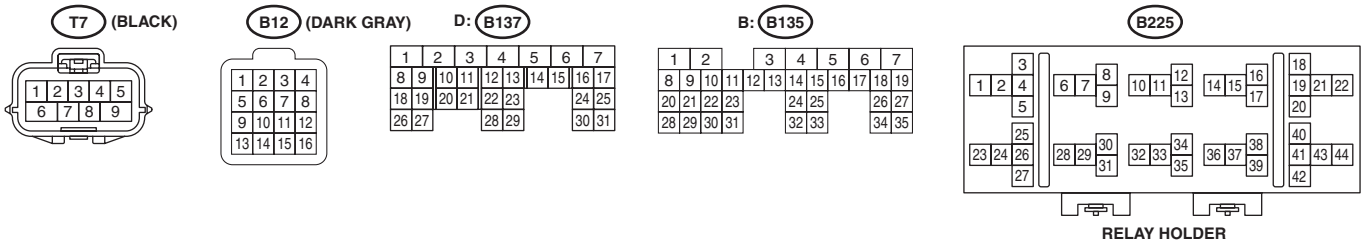

WI-48317

51.Stop Light System

A: WIRING DIAGRAM

1. 4 DOOR MODEL (WITHOUT EyeSight)

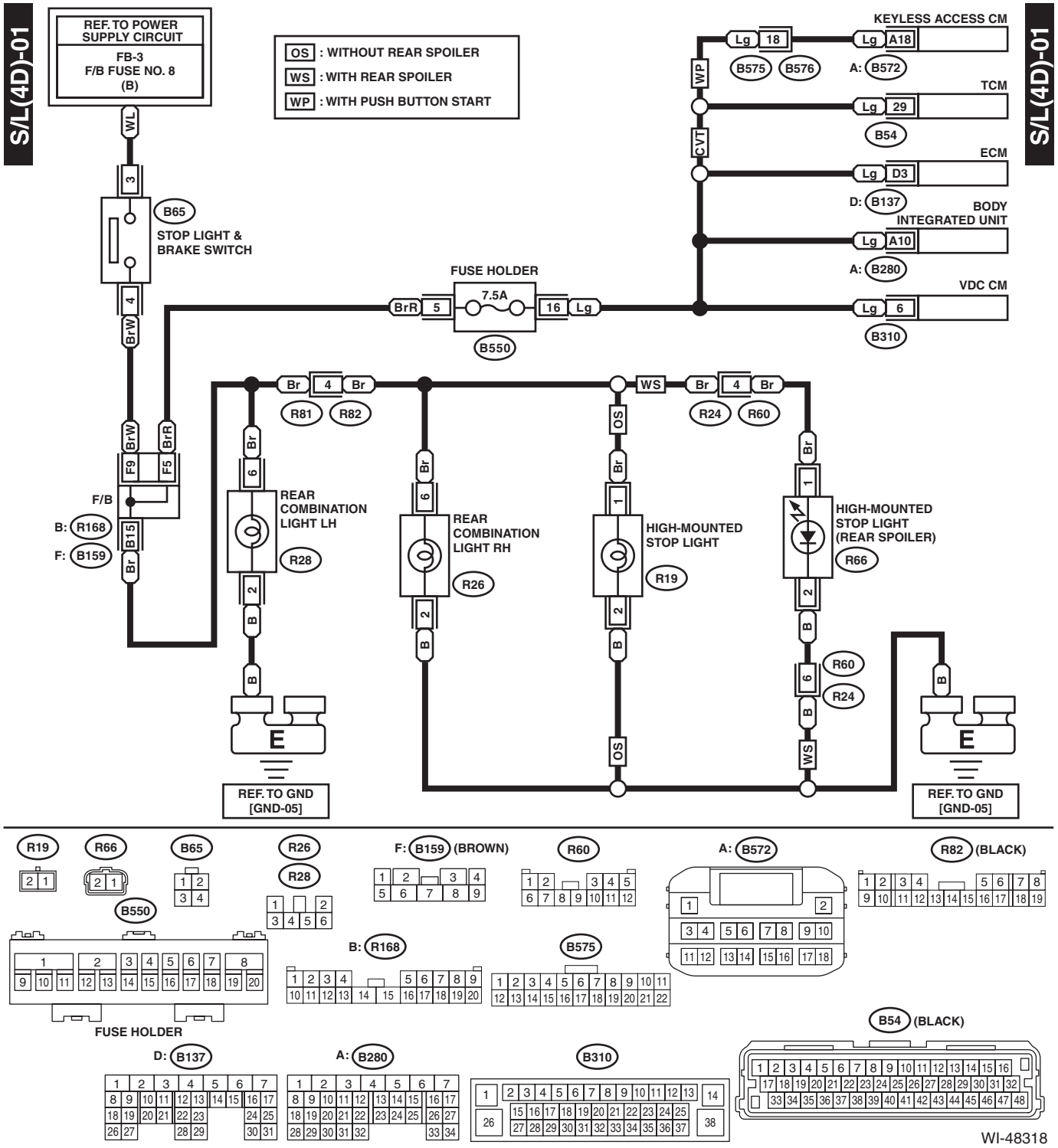

2. 4 DOOR MODEL (WITH EyeSight)

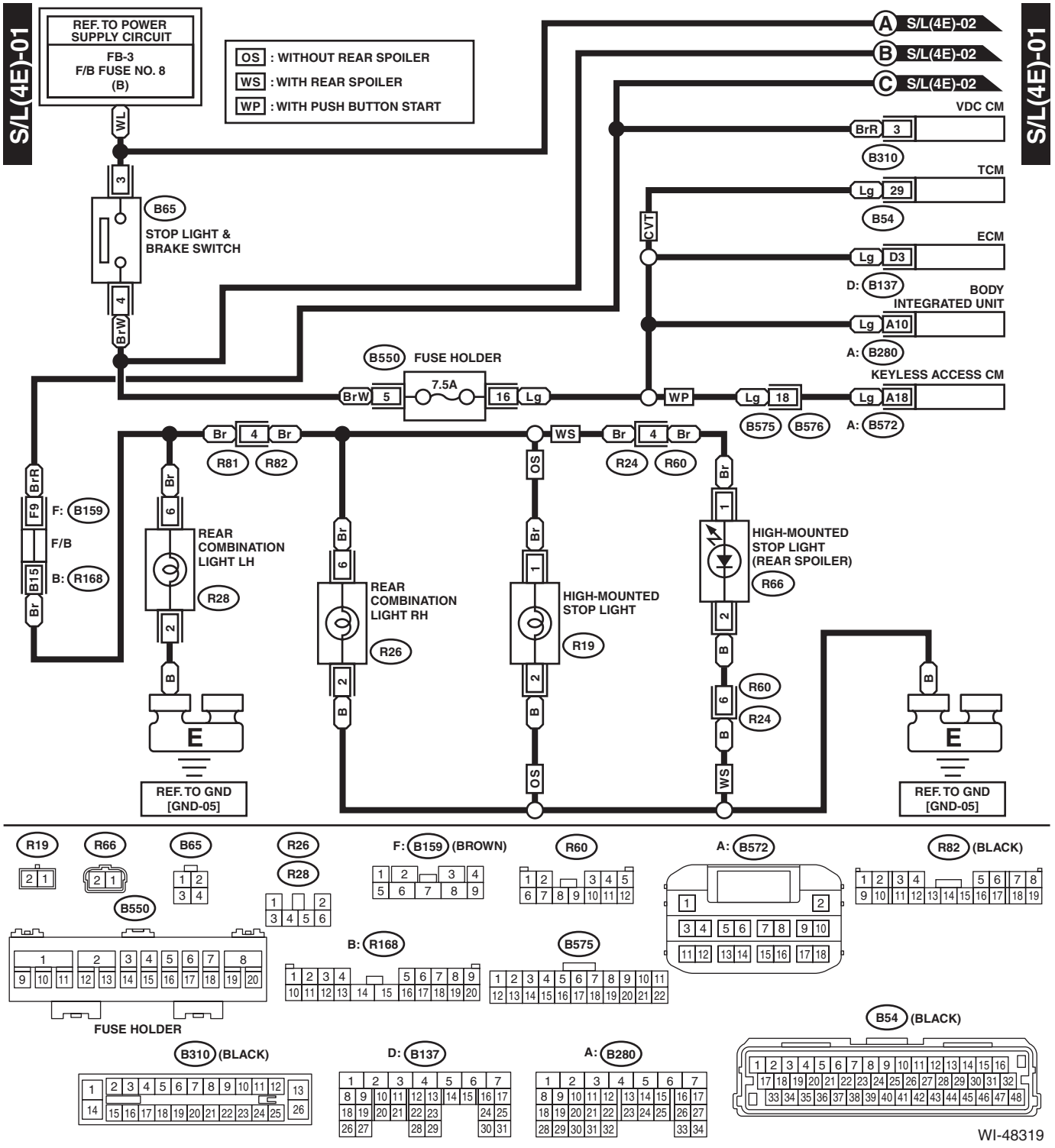

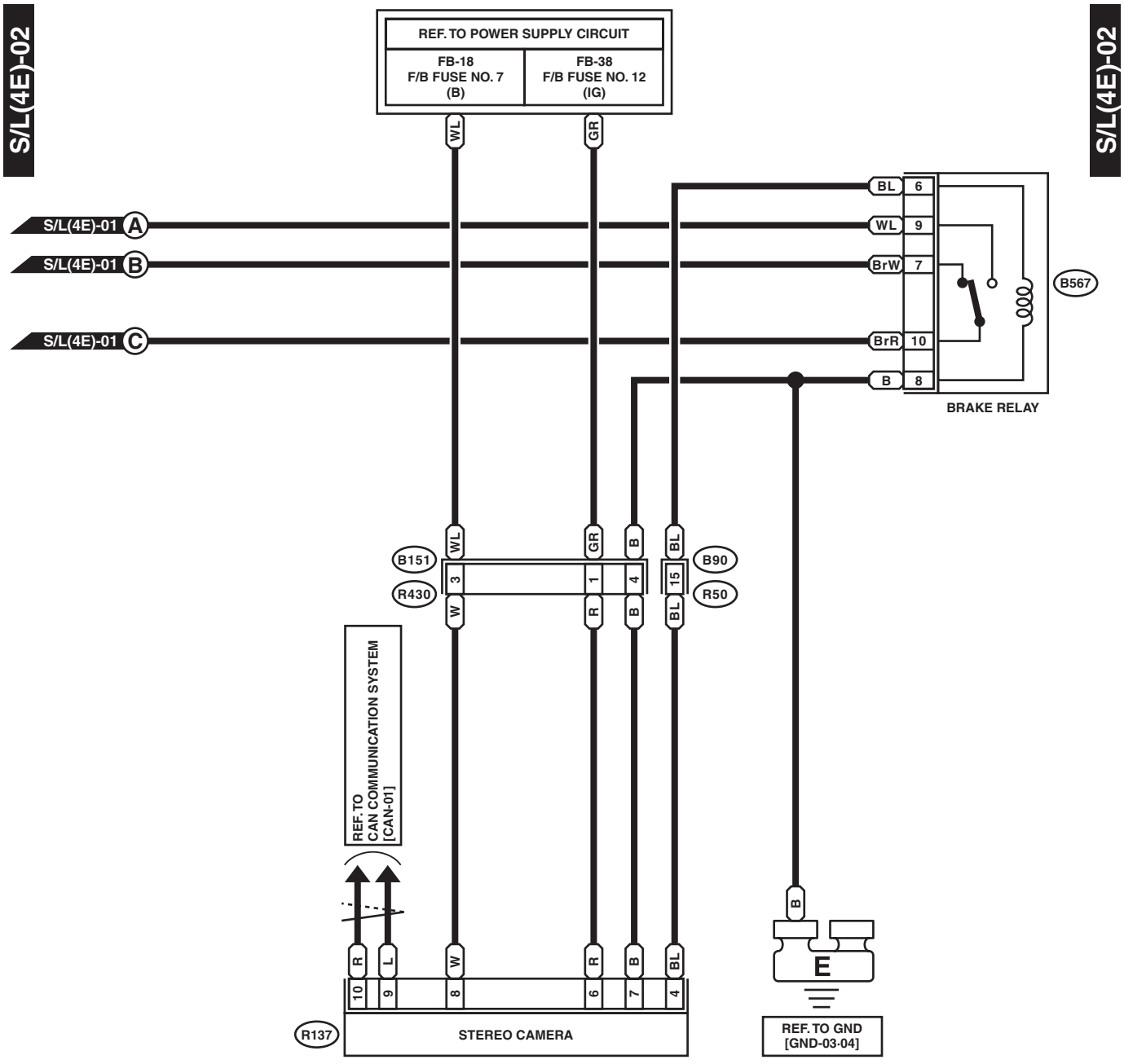
S/L(4E)-02
S/L(4E)-02
REF. TO POWER SUPPLY CIRCUIT
FB-18
F/B FUSE NO. 7
(B)
FB-38
F/B FUSE NO. 12
(IG)
WL
GR
S/L(4E)-01 A
S/L(4E)-01 B
S/L(4E)-01 C
BL 6
WL 9
BrW 7
BrR 10
B 8
B567
BRAKE RELAY
B151
R430
B90
R50
REF. TO
CAN COMMUNICATION SYSTEM
[CAN-01]
R137
STEREO CAMERA
REF. TO GND
[GND-03-04]

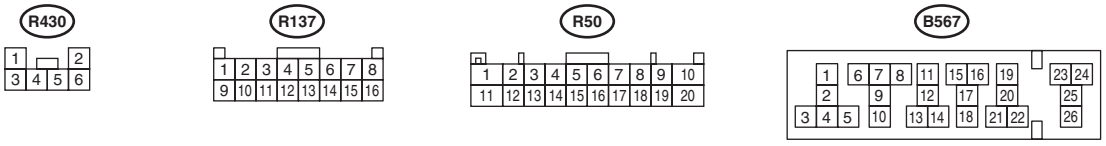
R430
R137
R50
B567
RELAY HOLDER

WI-48320

3. 5 DOOR MODEL (WITHOUT EyeSight)

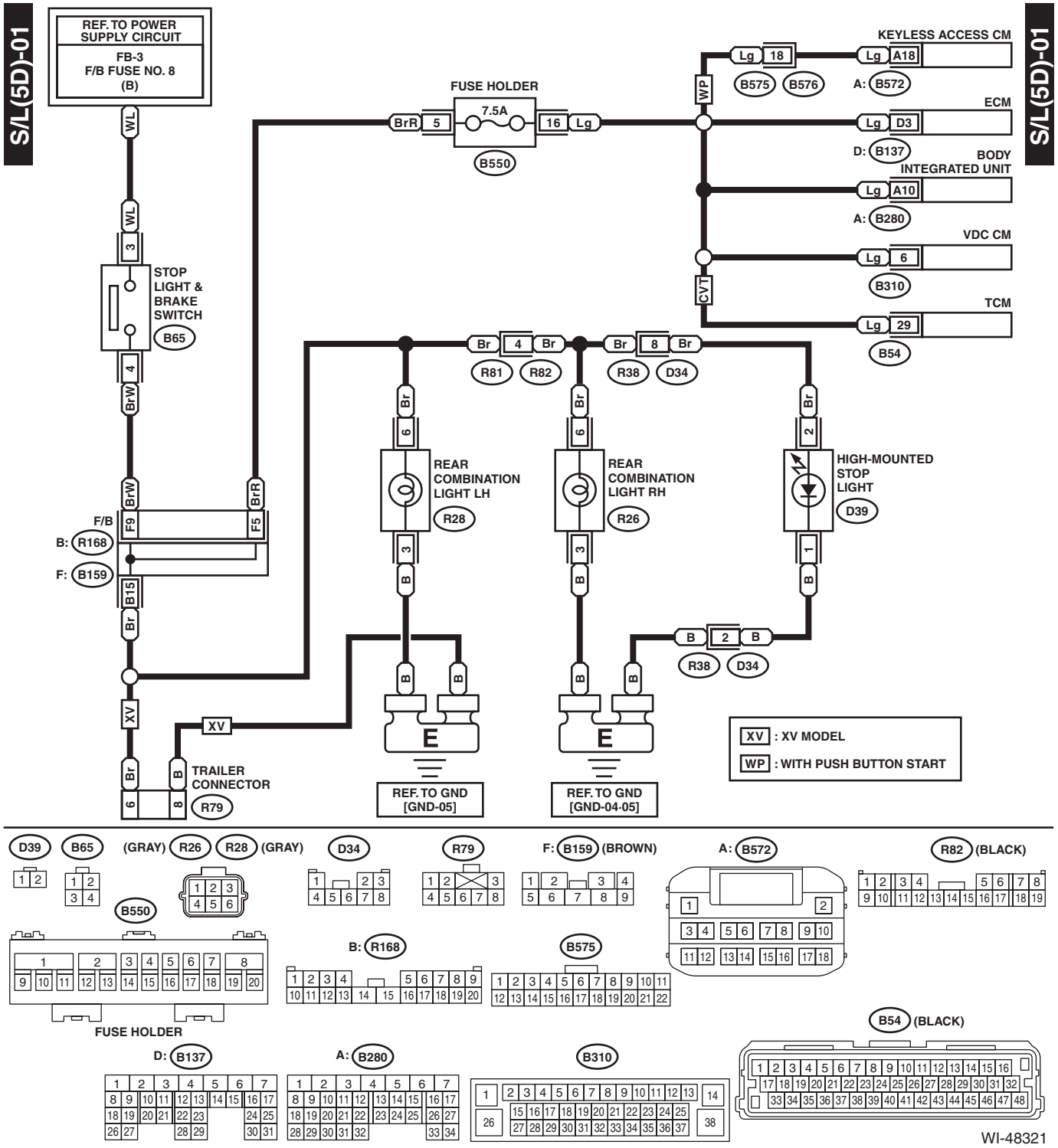

4. 5 DOOR MODEL (WITH EyeSight)

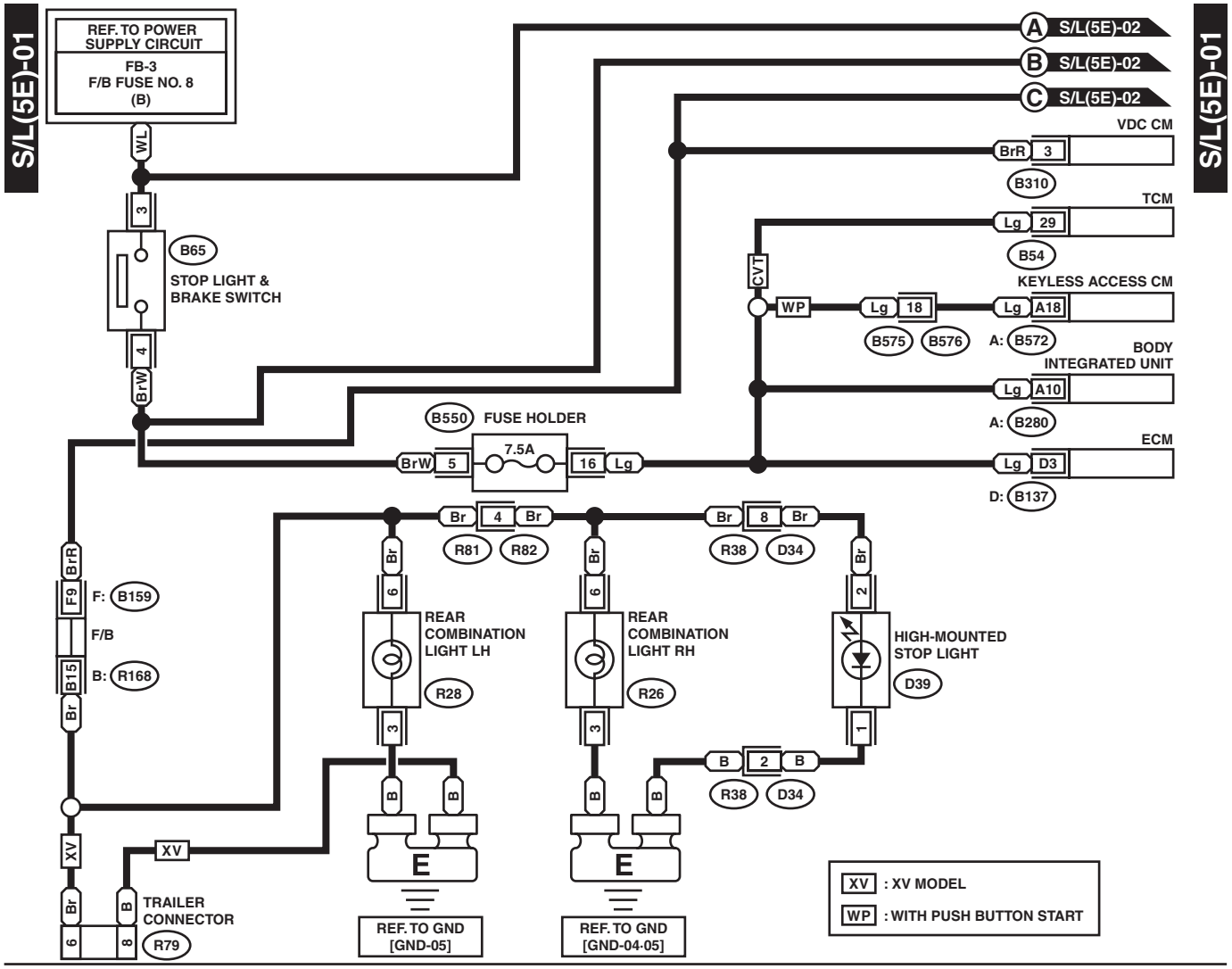

WI-48322

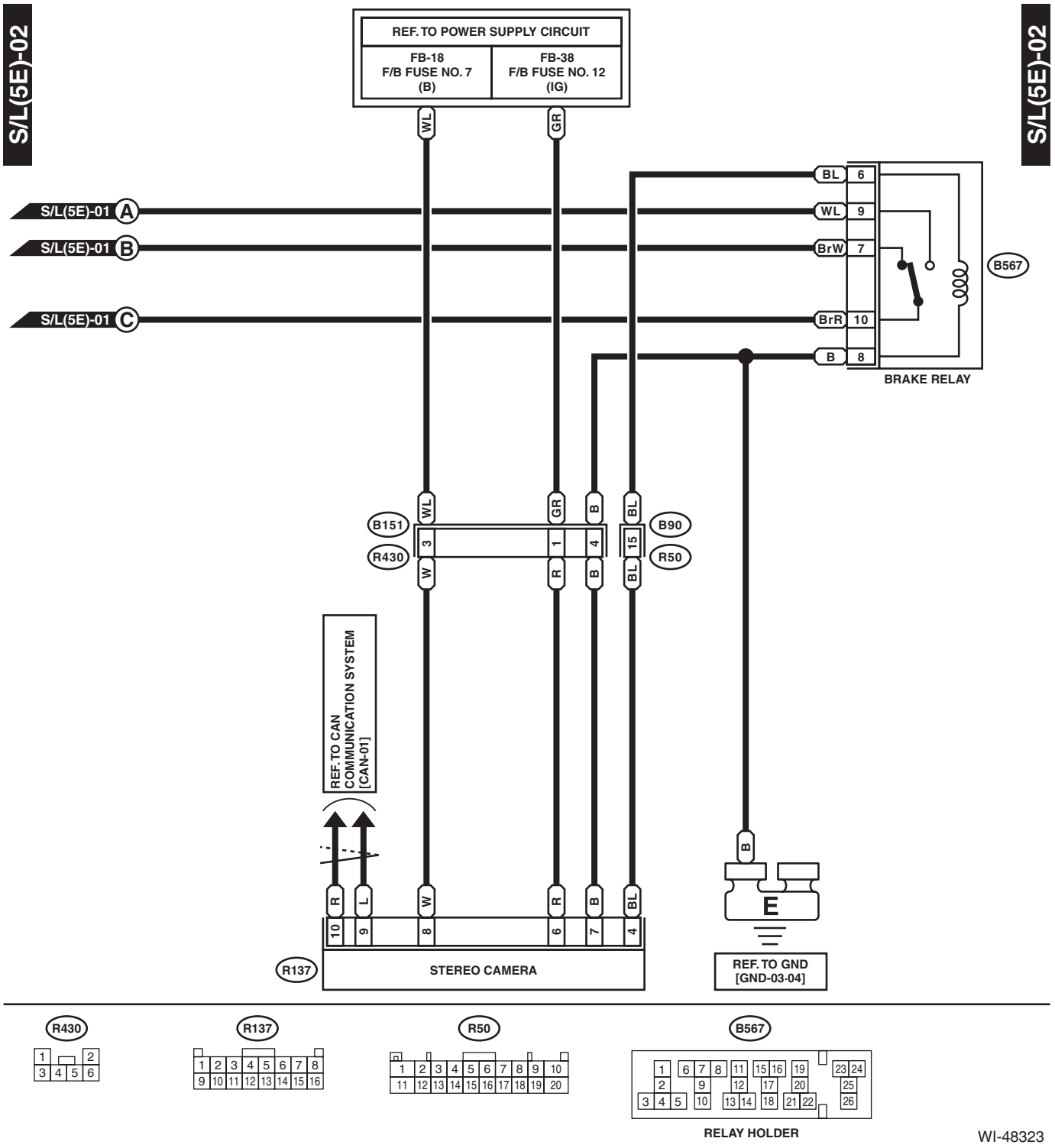
S/L(5E)-02
S/L(5E)-02
REF. TO POWER SUPPLY CIRCUIT
FB-18
F/B FUSE NO. 7
(B)
FB-38
F/B FUSE NO. 12
(IG)
WL
GR
S/L(5E)-01 A
S/L(5E)-01 B
S/L(5E)-01 C
BL 6
WL 9
BrW 7
BrR 10
B 8
B567
BRAKE RELAY
B151
R430
B90
R50
REF. TO CAN COMMUNICATION SYSTEM [CAN-01]
R137
STEREO CAMERA
REF. TO GND [GND-03-04]
R430
R137
R50
B567
RELAY HOLDER
WI-48323

52.Sunroof Control System

A: WIRING DIAGRAM

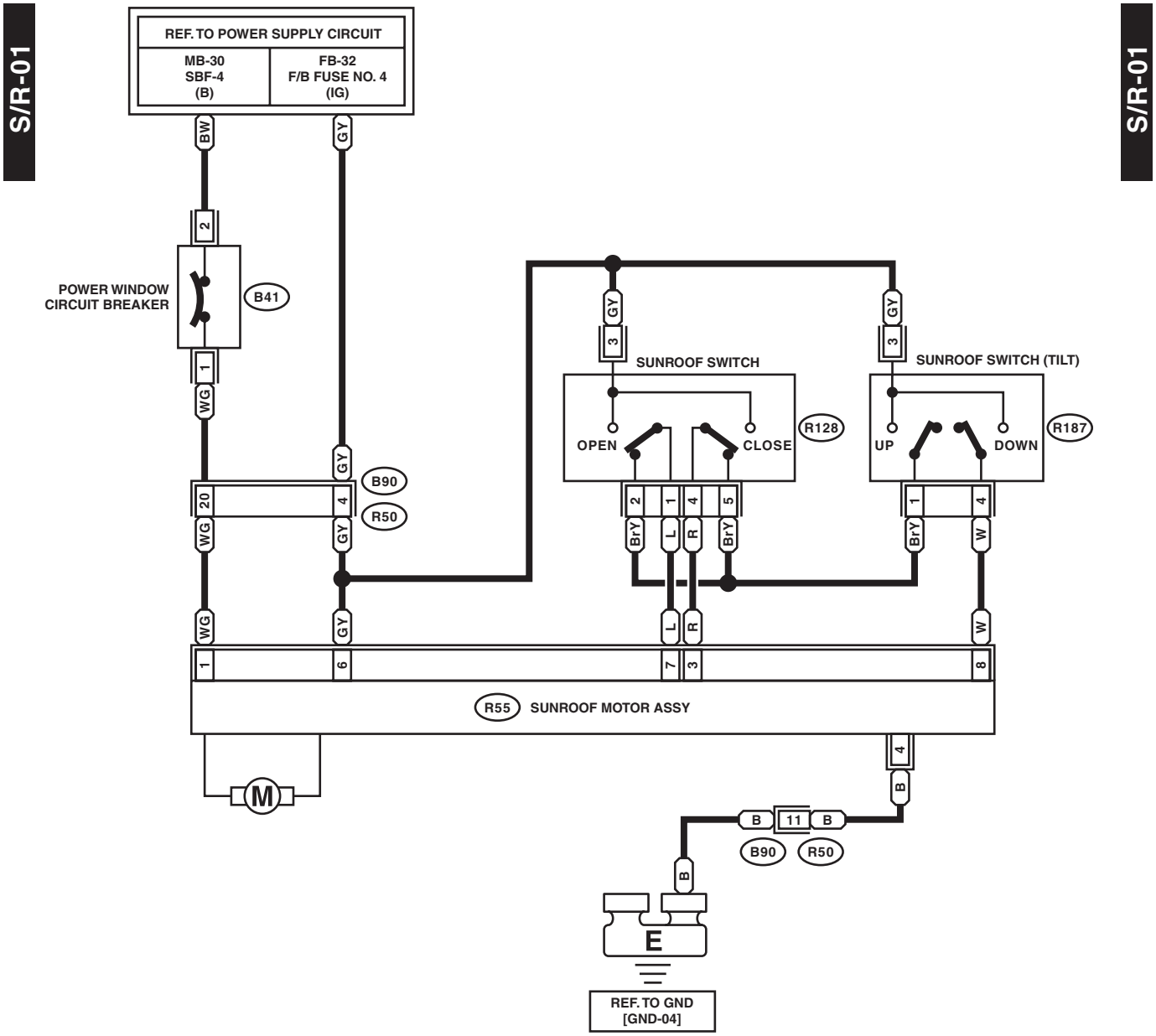

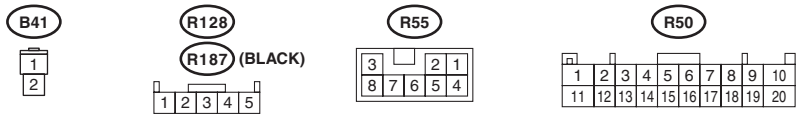

WI-48324

53.Tire Pressure Monitoring System

A: WIRING DIAGRAM

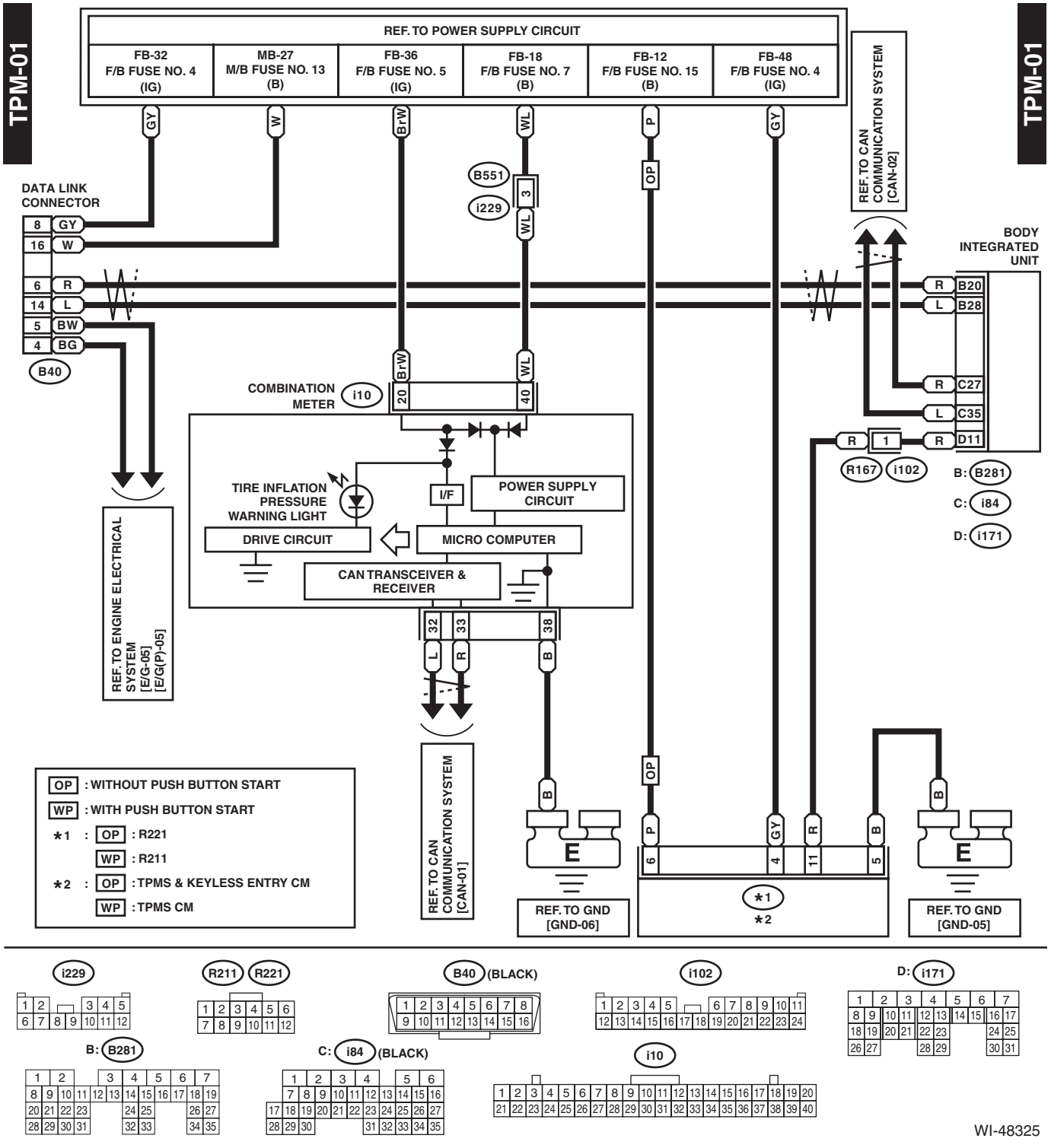

WI-48325

54.Turn Signal Light and Hazard Light System

A: WIRING DIAGRAM

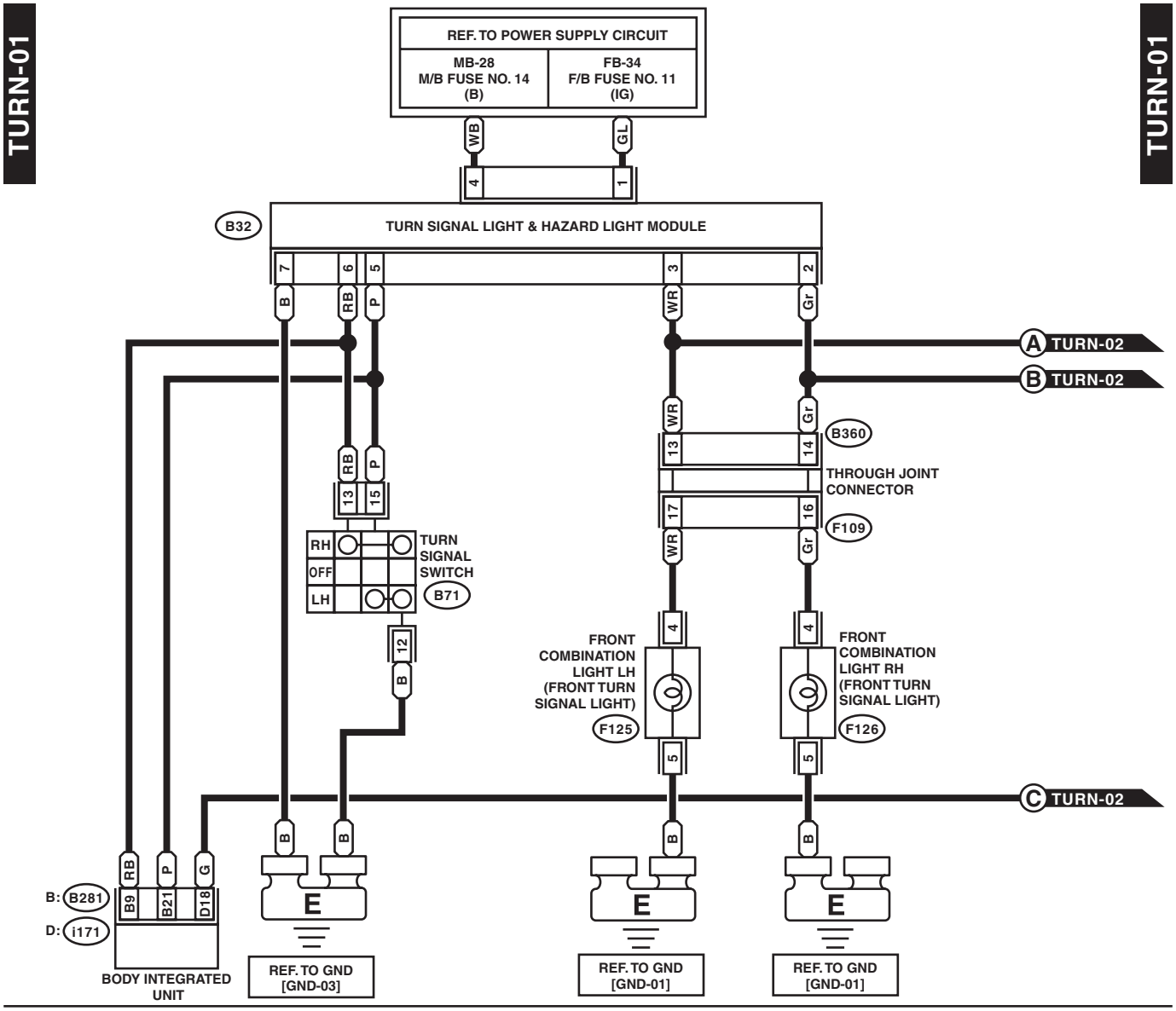

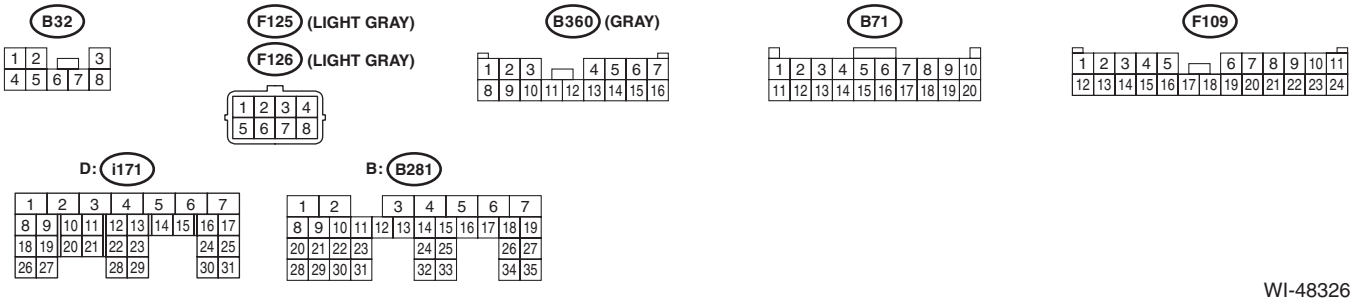

WI-48326

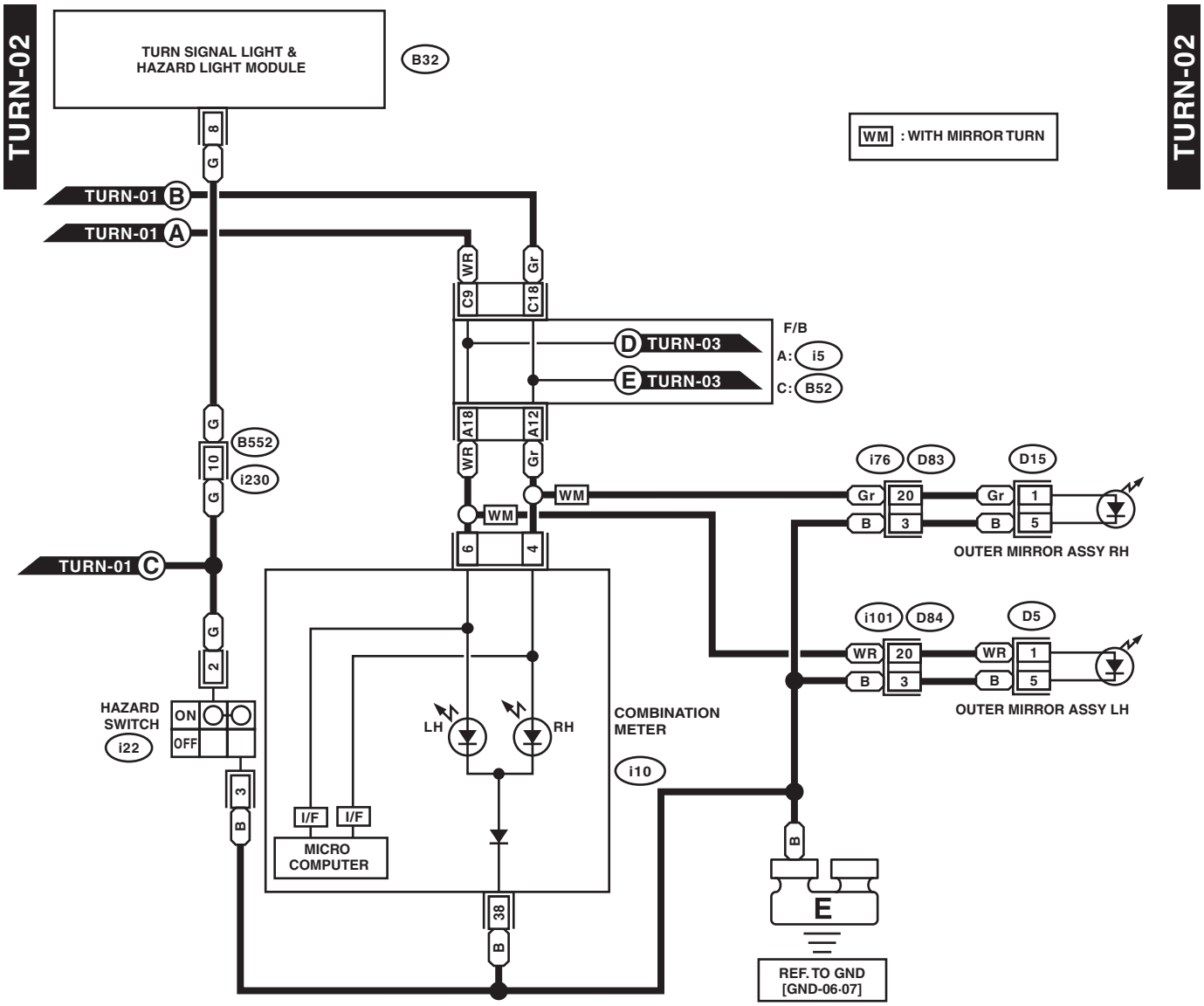
TURN-02
TURN SIGNAL LIGHT & HAZARD LIGHT MODULE
B32
WM : WITH MIRROR TURN
TURN-01 B
TURN-01 A
TURN-01 C
TURN-03 D
TURN-03 E
F/B
A: i5
C: B52
B552
i230
i76
D83
D15
OUTER MIRROR ASSY RH
i101
D84
D5
OUTER MIRROR ASSY LH
HAZARD SWITCH
i22
ON
OFF
LH
RH
COMBINATION METER
i10
I/F
MICRO COMPUTER
REF. TO GND [GND-06-07]

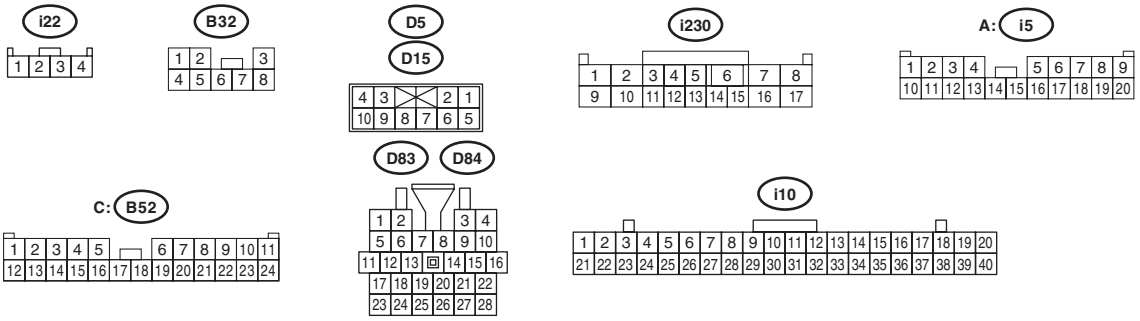
i22
B32
D5
D15
i230
A: i5
C: B52
D83
D84
i10

WI-48327

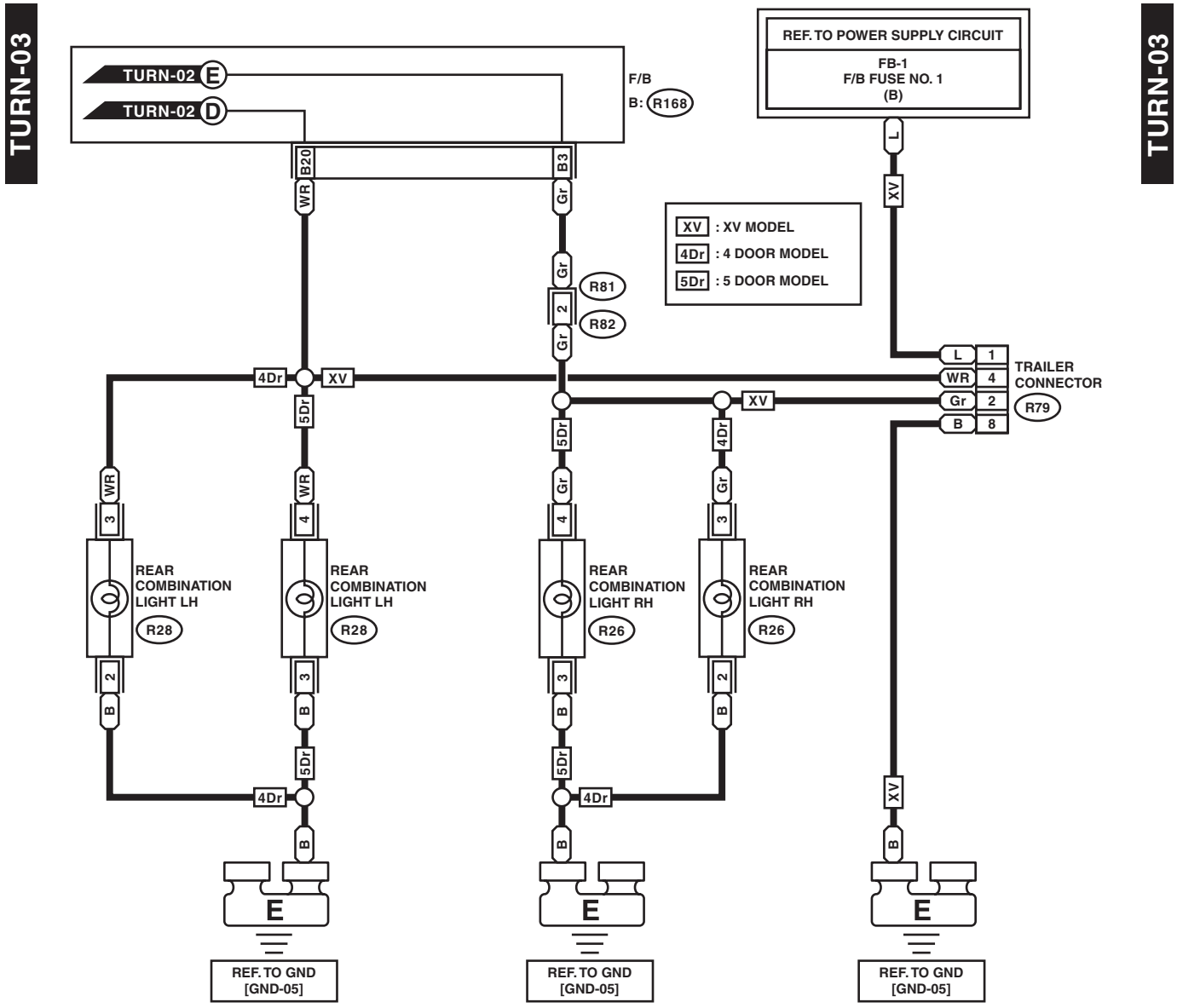
TURN-03
TURN-02 E
TURN-02 D
F/B
B: R168
REF. TO POWER SUPPLY CIRCUIT
FB-1
F/B FUSE NO. 1
(B)
XV : XV MODEL
4Dr : 4 DOOR MODEL
5Dr : 5 DOOR MODEL
B20
B3
WR
Gr
R81
R82
L
XV
TRAILER CONNECTOR
R79
4Dr
5Dr
REAR COMBINATION LIGHT LH
R28
REAR COMBINATION LIGHT RH
R26
B
E
REF. TO GND [GND-05]

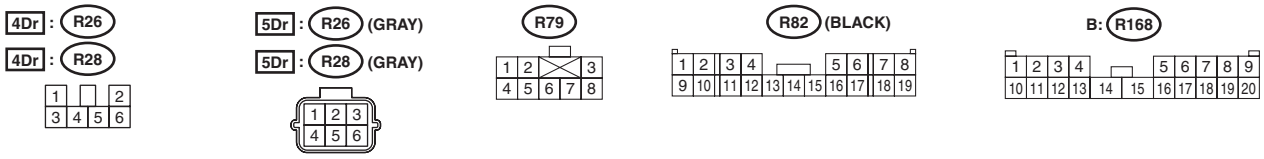
4Dr : R26
4Dr : R28
5Dr : R26 (GRAY)
5Dr : R28 (GRAY)
R79
R82 (BLACK)
B: R168

WI-48736

55.Vehicle Dynamics Control System

A: WIRING DIAGRAM

1. WITHOUT EyeSight

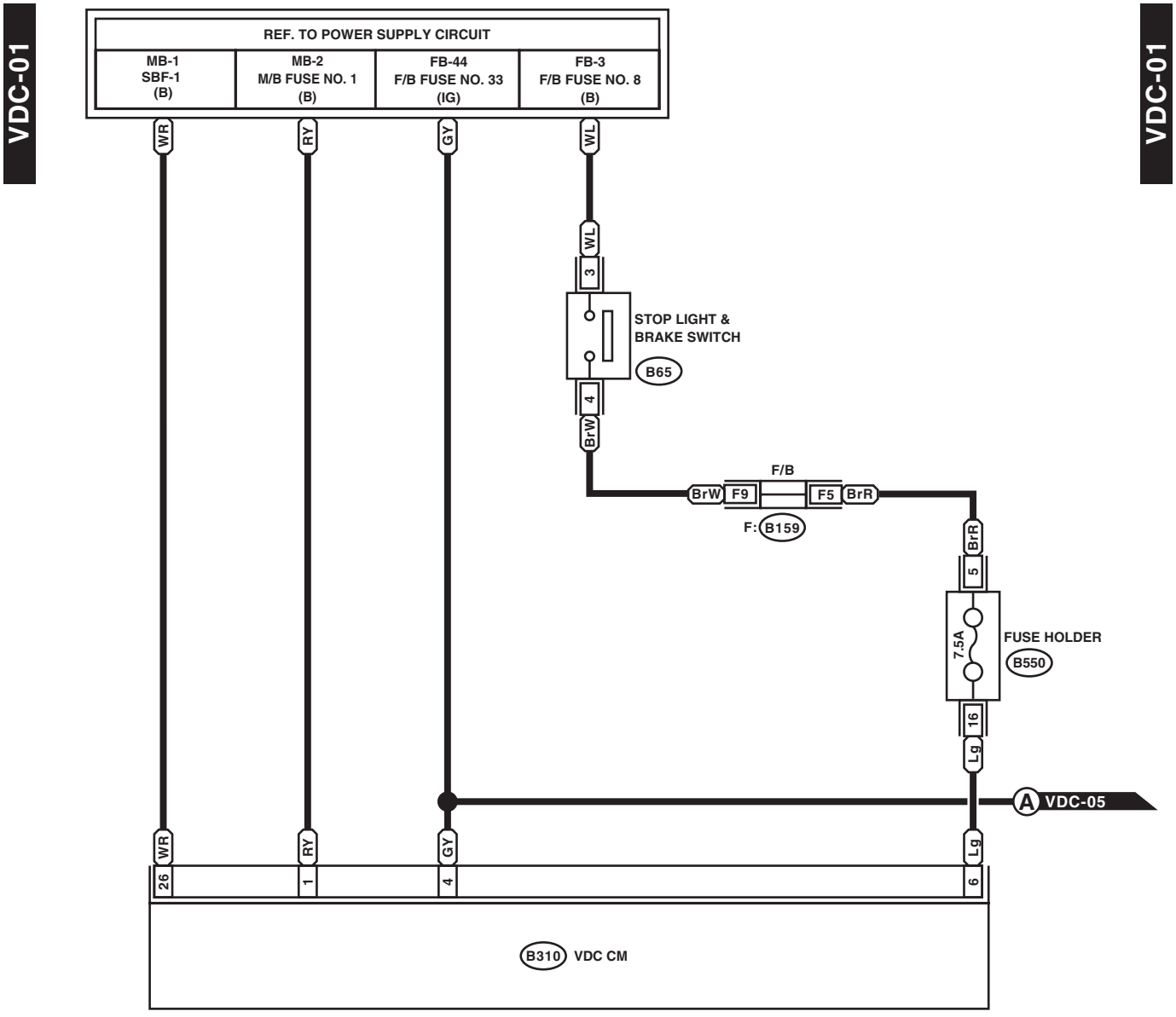

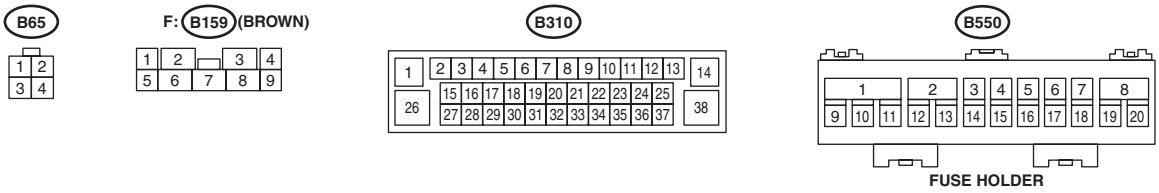

WI-48328

VDC-02

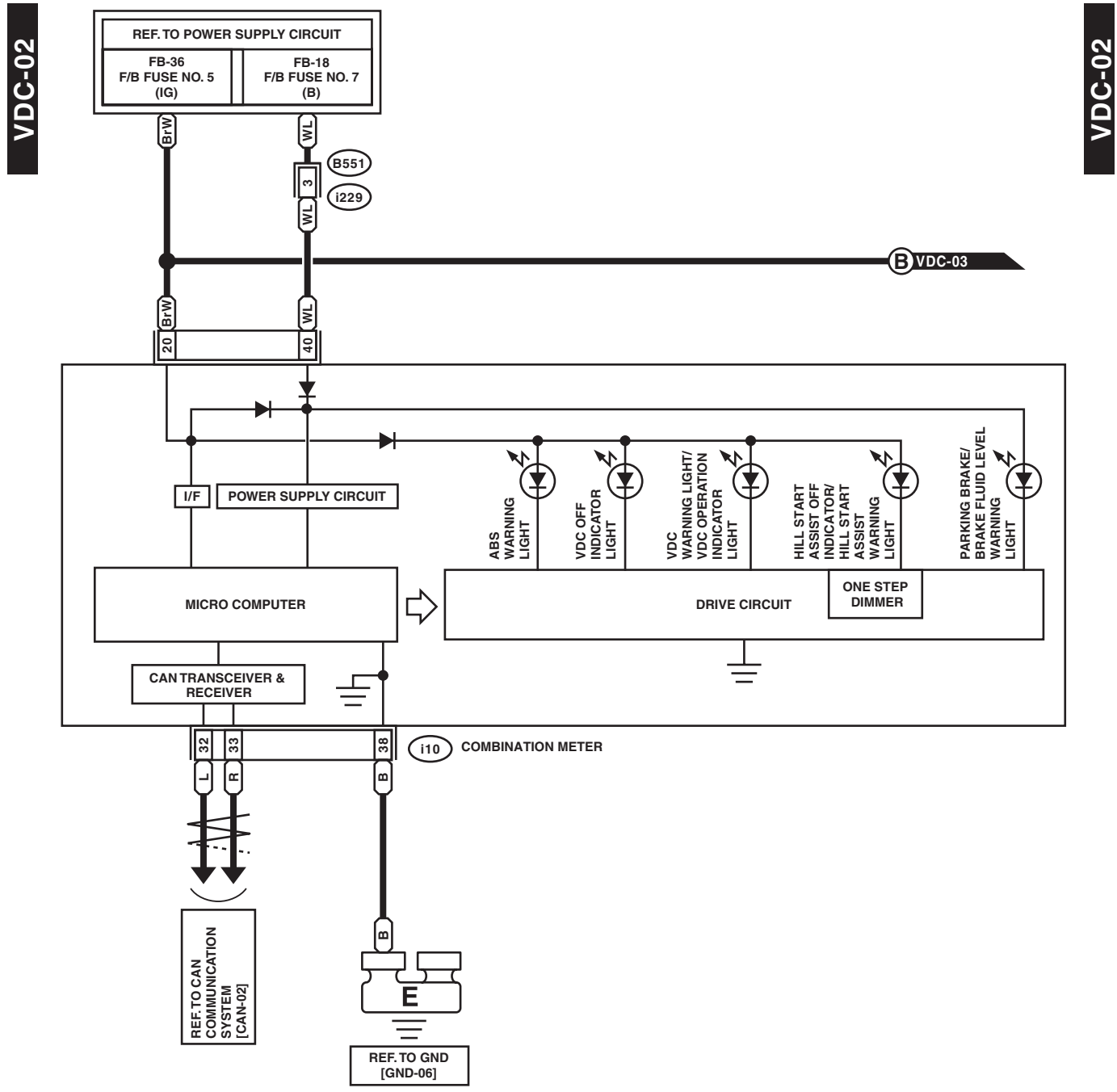

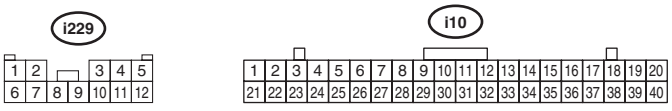

WI-48329

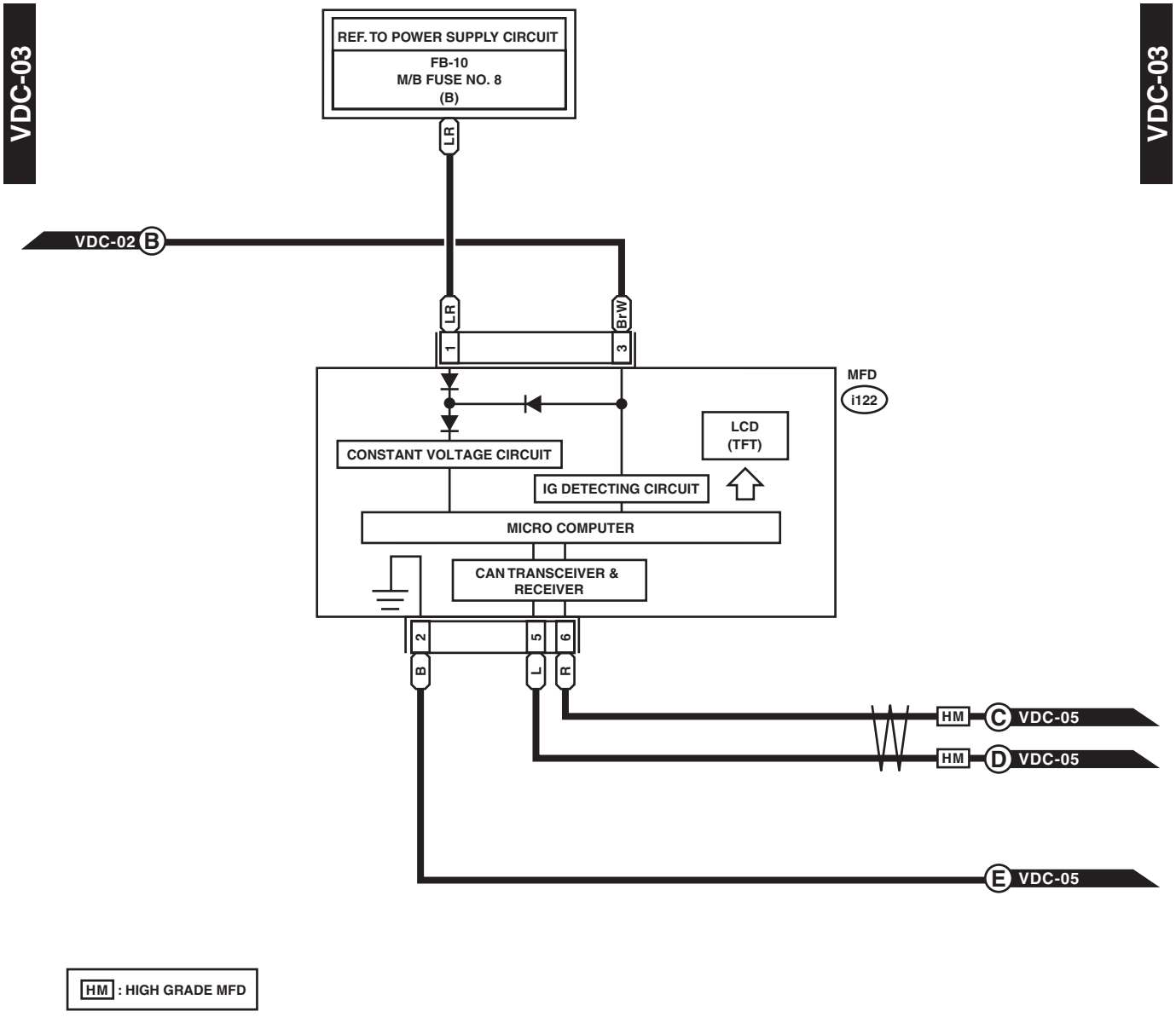
VDC-03
VDC-03
REF. TO POWER SUPPLY CIRCUIT
FB-10
M/B FUSE NO. 8
(B)
LR
VDC-02 B
LR
BrW
1
3
MFD
i122
LCD
(TFT)
CONSTANT VOLTAGE CIRCUIT
IG DETECTING CIRCUIT
MICRO COMPUTER
CAN TRANSCEIVER &
RECEIVER
2
5
6
B
L
R
HM C VDC-05
HM D VDC-05
E VDC-05
HM : HIGH GRADE MFD

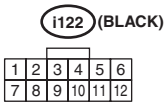
i122 (BLACK)
1 2 3 4 5 6
7 8 9 10 11 12

WI-48330

VDC-04

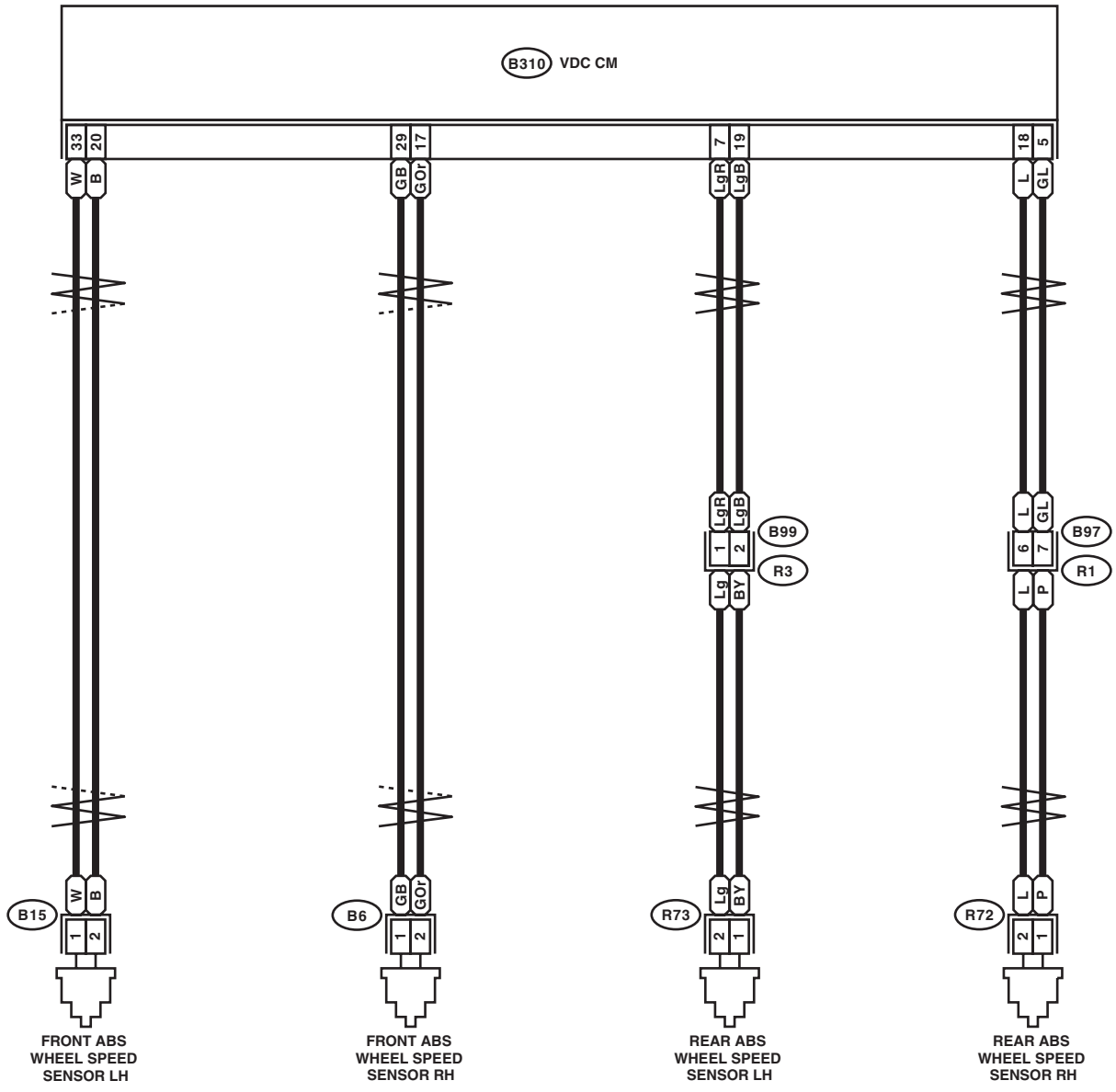

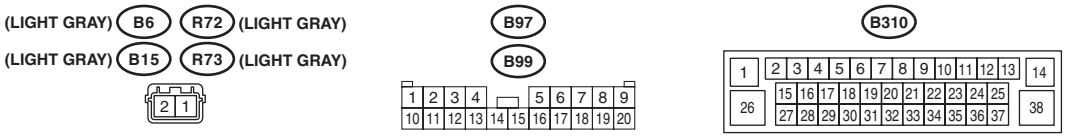

WI-48331

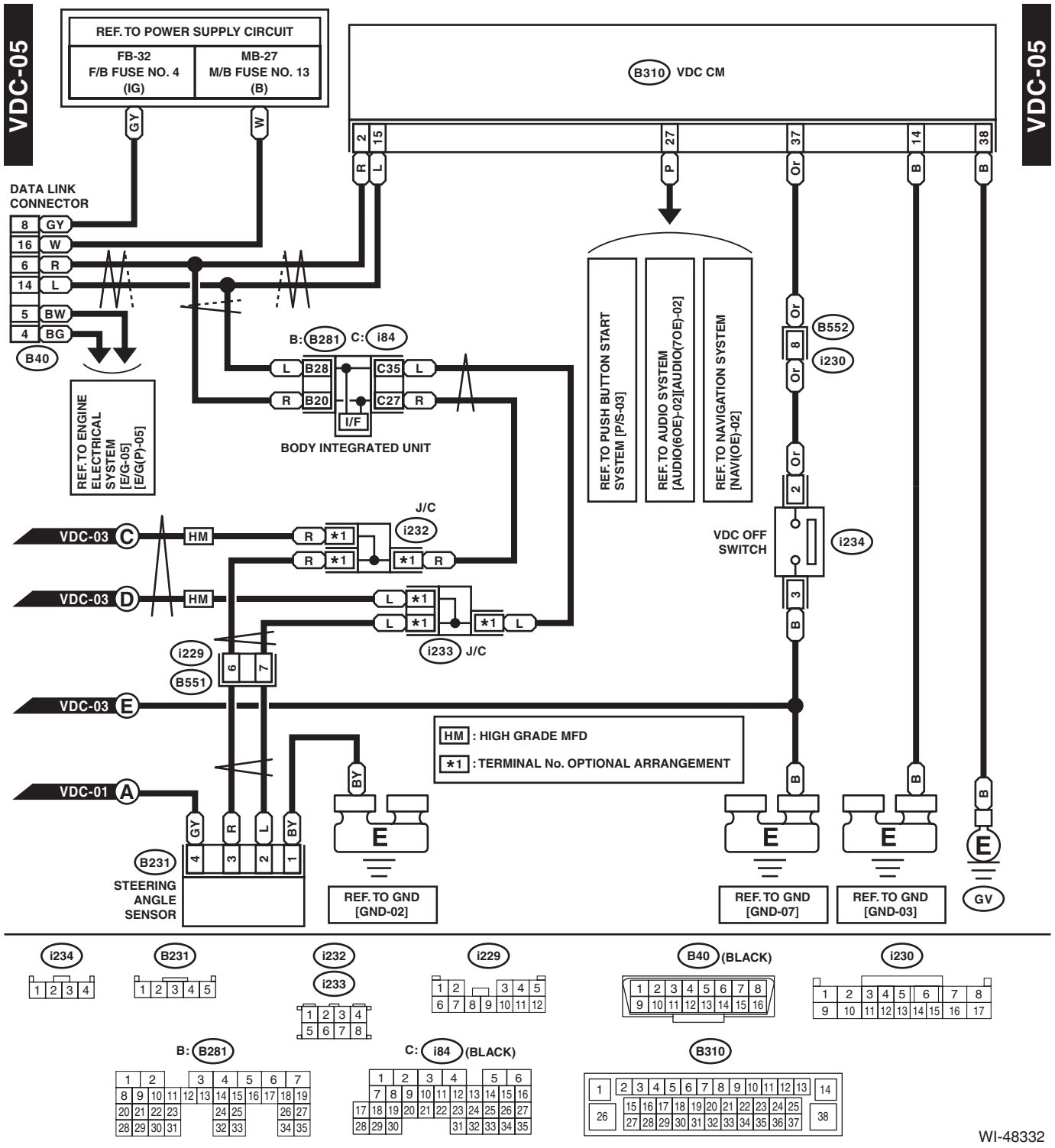
VDC-05
VDC-05
REF. TO POWER SUPPLY CIRCUIT
FB-32
F/B FUSE NO. 4
(IG)
MB-27
M/B FUSE NO. 13
(B)
B310 VDC CM
DATA LINK
CONNECTOR
8 GY
16 W
6 R
14 L
5 BW
4 BG
B40
REF. TO ENGINE
ELECTRICAL
SYSTEM
[E/G-05]
[E/G(P)-05]
B: B281 C: i84
L B28
R B20
C35 L
C27 R
I/F
BODY INTEGRATED UNIT
REF. TO PUSH BUTTON START
SYSTEM [P/S-03]
REF. TO AUDIO SYSTEM
[AUDIO(6OE)-02][AUDIO(7OE)-02]
REF. TO NAVIGATION SYSTEM
[NAVI(OE)-02]
B552
i230
VDC OFF
SWITCH
i234
J/C
i232
i233 J/C
i229
B551
VDC-03 C
VDC-03 D
VDC-03 E
VDC-01 A
HM : HIGH GRADE MFD
*1 : TERMINAL No. OPTIONAL ARRANGEMENT
B231
STEERING
ANGLE
SENSOR
REF. TO GND
[GND-02]
REF. TO GND
[GND-07]
REF. TO GND
[GND-03]
GV
i234
i232
i233
i229
B40 (BLACK)
i230
B: B281
C: i84 (BLACK)
B310
WI-48332

2. WITH EyeSight

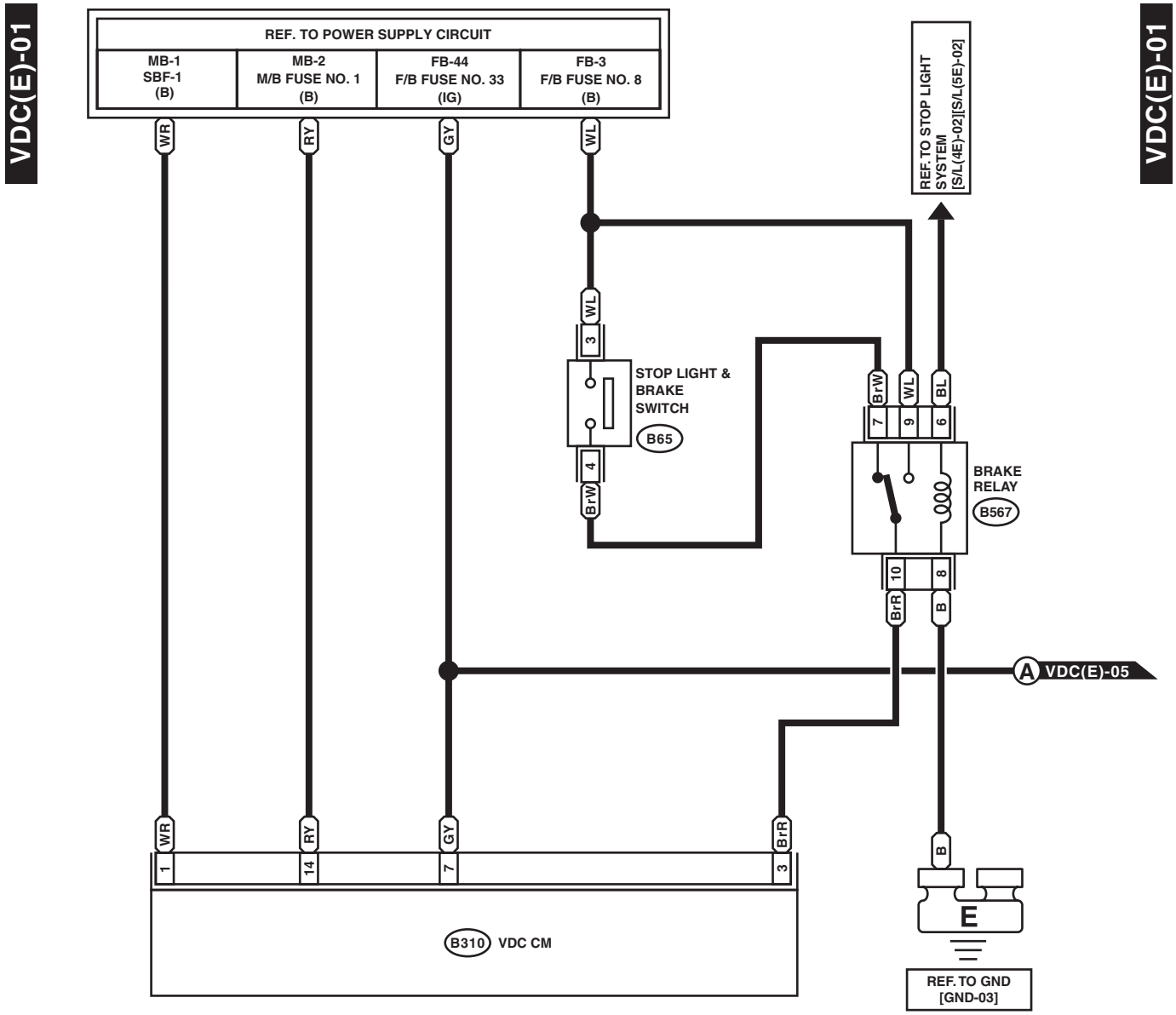

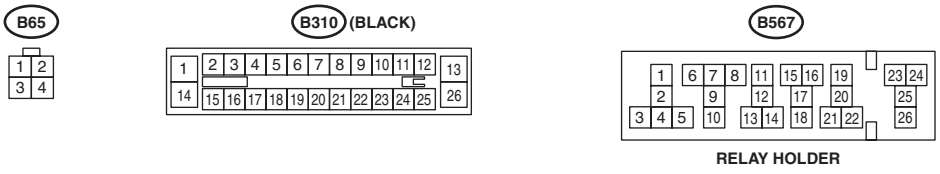

WI-48333

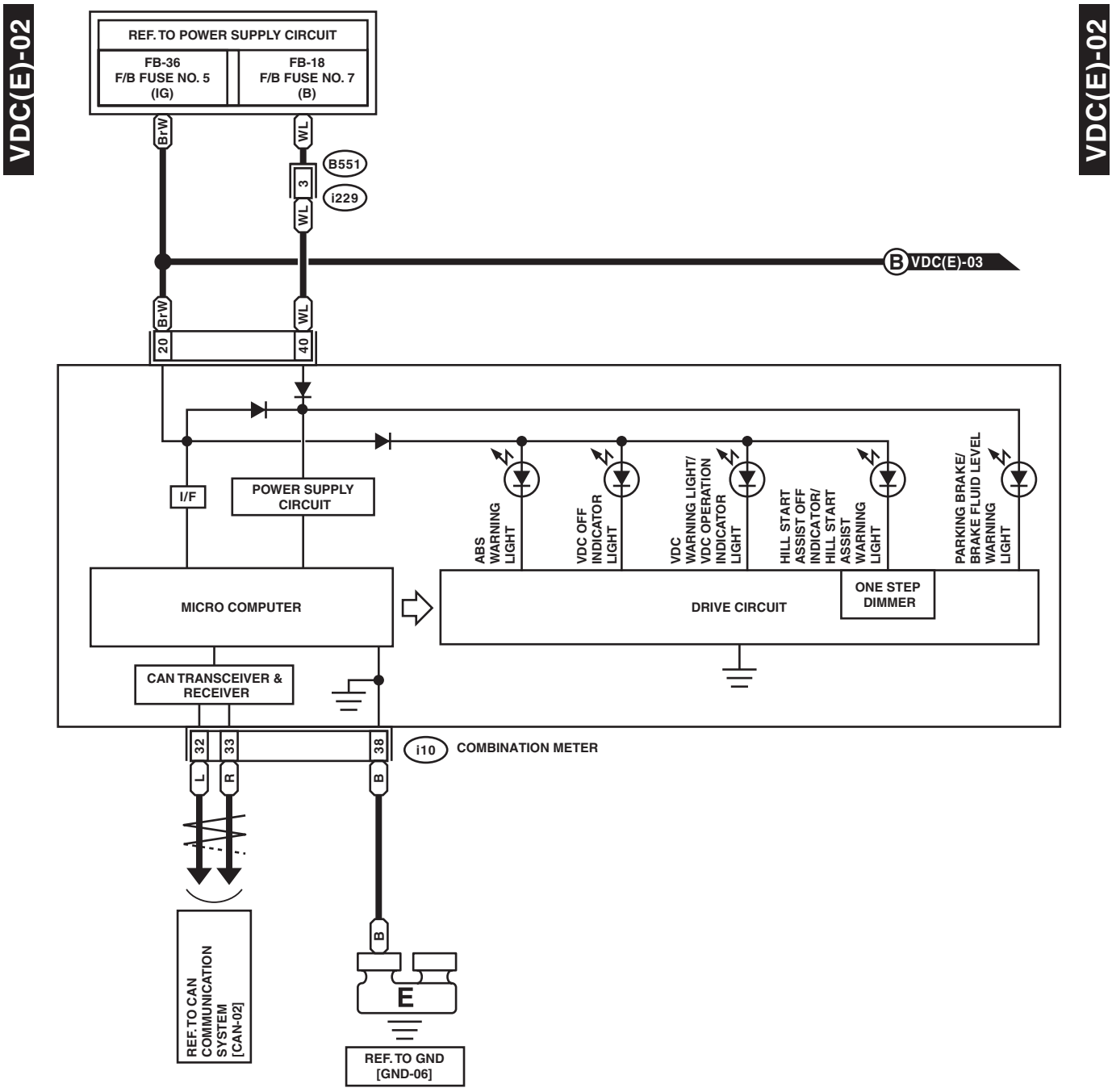
VDC(E)-02
VDC(E)-02
REF. TO POWER SUPPLY CIRCUIT
FB-36
F/B FUSE NO. 5
(IG)
FB-18
F/B FUSE NO. 7
(B)
Br-W
WL
B551
3
i229
WL
B VDC(E)-03
Br-W
WL
20
40
I/F
POWER SUPPLY CIRCUIT
ABS WARNING LIGHT
VDC OFF INDICATOR LIGHT
VDC WARNING LIGHT/ VDC OPERATION INDICATOR LIGHT
HILL START ASSIST OFF INDICATOR/ HILL START ASSIST WARNING LIGHT
PARKING BRAKE/ BRAKE FLUID LEVEL WARNING LIGHT
MICRO COMPUTER
DRIVE CIRCUIT
ONE STEP DIMMER
CAN TRANSCEIVER & RECEIVER
32
33
38
i10
COMBINATION METER
L
R
B
REF. TO CAN COMMUNICATION SYSTEM [CAN-02]
B
E
REF. TO GND [GND-06]

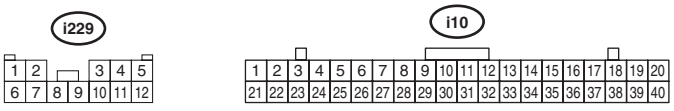
i229
1 2 3 4 5
6 7 8 9 10 11 12
i10
1 2 3 4 5 6 7 8 9 10 11 12 13 14 15 16 17 18 19 20
21 22 23 24 25 26 27 28 29 30 31 32 33 34 35 36 37 38 39 40

WI-48334

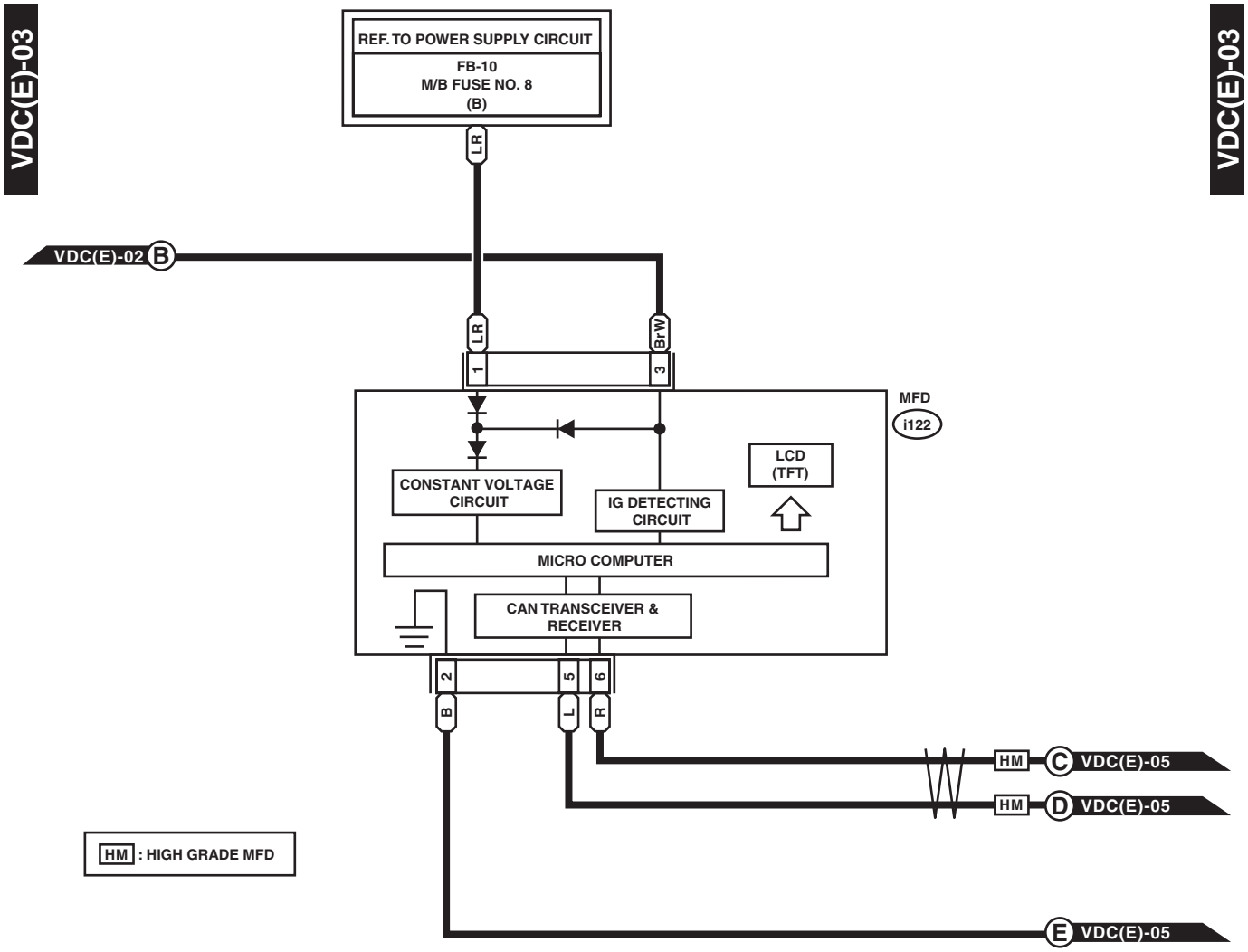

i122 (BLACK)

1	2	3	4	5	6
7	8	9	10	11	12

WI-48335

VDC(E)-04

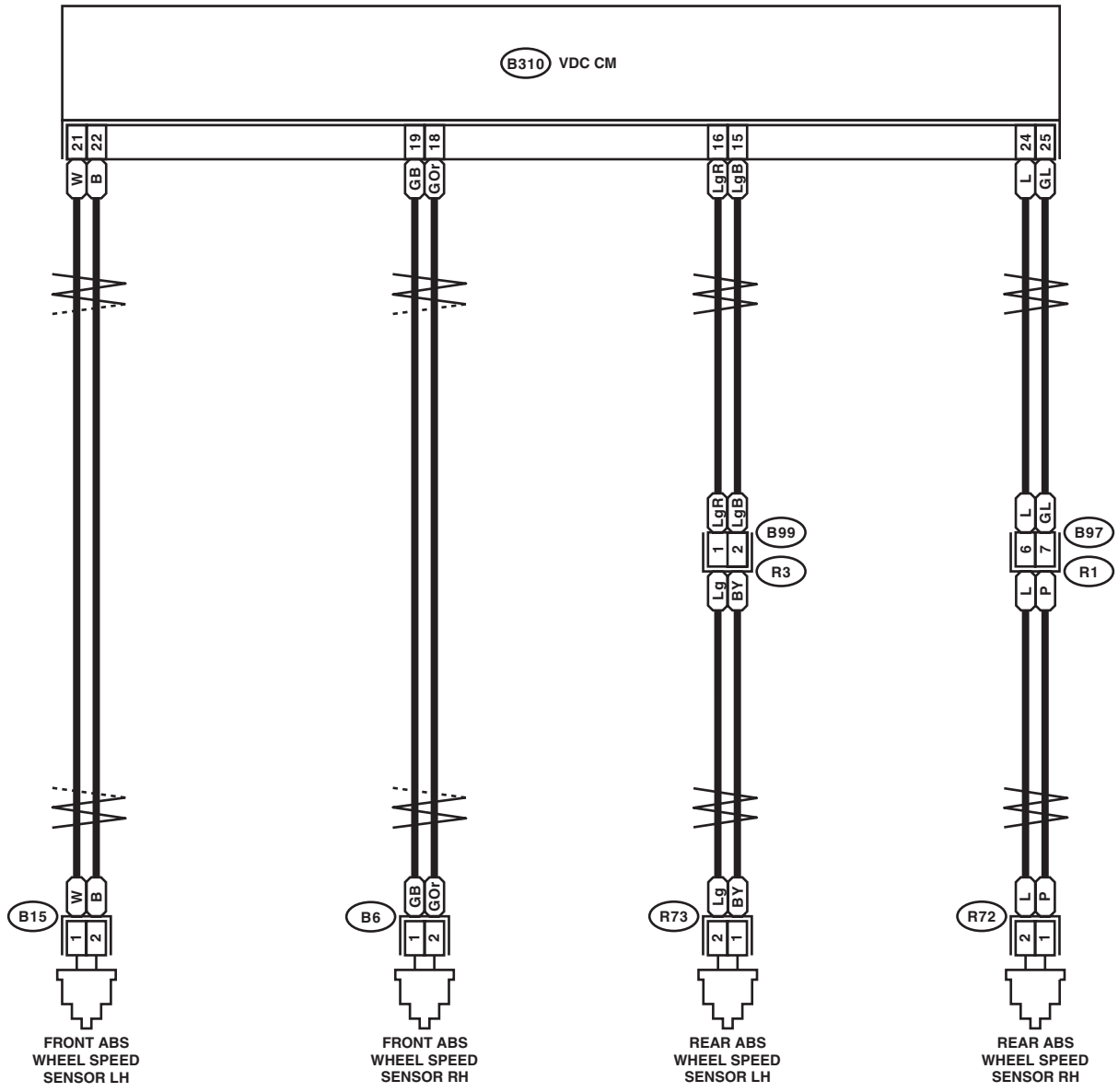

(LIGHT GRAY) B6 R72 (LIGHT GRAY)

(LIGHT GRAY) B15 R73 (LIGHT GRAY)

B97

B99

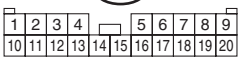

B310 (BLACK)

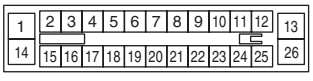

WI-48336

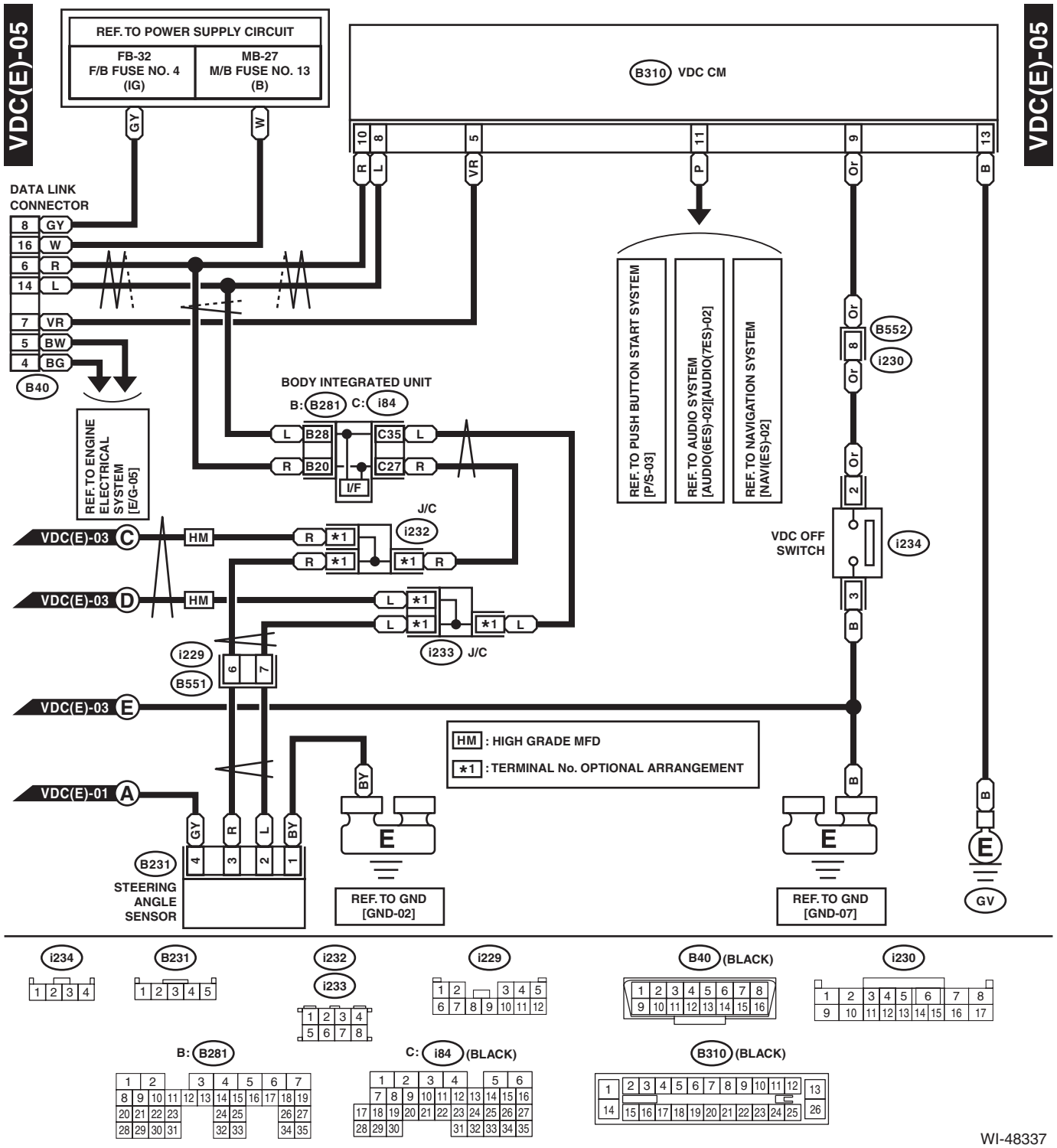
VDC(E)-05
REF. TO POWER SUPPLY CIRCUIT
FB-32
F/B FUSE NO. 4
(IG)
MB-27
M/B FUSE NO. 13
(B)
B310 VDC CM
DATA LINK
CONNECTOR
8 GY
16 W
6 R
14 L
7 VR
5 BW
4 BG
B40
BODY INTEGRATED UNIT
B: B281 C: i84
L B28
R B20
C35 L
C27 R
I/F
REF. TO ENGINE
ELECTRICAL
SYSTEM
[E/G-05]
REF. TO PUSH BUTTON START SYSTEM
[P/S-03]
REF. TO AUDIO SYSTEM
[AUDIO(6ES)-02][AUDIO(7ES)-02]
REF. TO NAVIGATION SYSTEM
[NAVI(ES)-02]
B552
i230
i234
VDC OFF
SWITCH
J/C
i232
i233
i229
B551
VDC(E)-03 C
VDC(E)-03 D
VDC(E)-03 E
VDC(E)-01 A
HM
*1
HM : HIGH GRADE MFD
*1 : TERMINAL No. OPTIONAL ARRANGEMENT
B231
STEERING
ANGLE
SENSOR
REF. TO GND
[GND-02]
REF. TO GND
[GND-07]
GV
i234
B231
i232
i233
i229
B40 (BLACK)
i230
B: B281
C: i84 (BLACK)
B310 (BLACK)

WI-48337

56.Wiper Deicer System

A: WIRING DIAGRAM

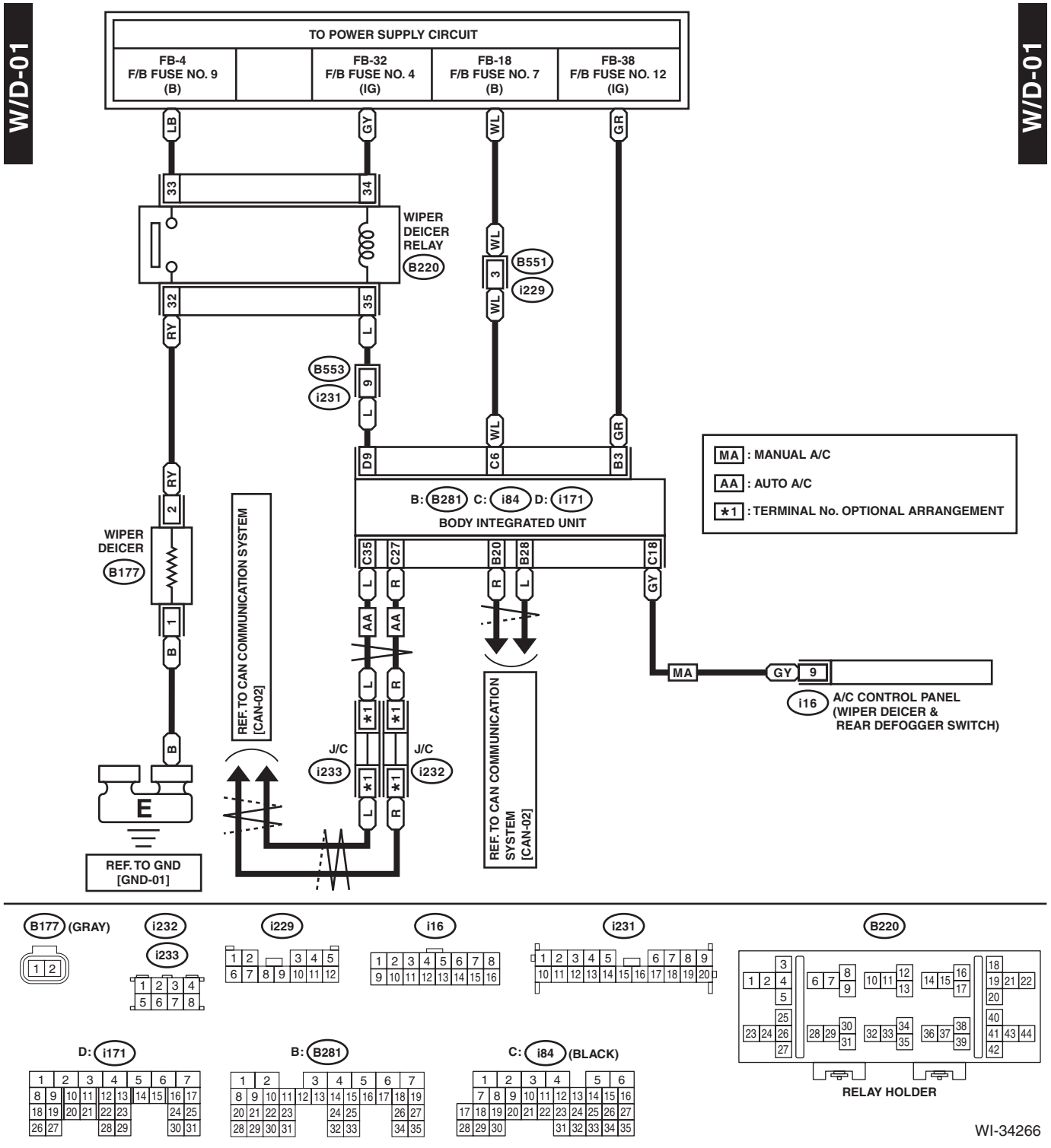

57.Harness Components Location

A: LOCATION

1. 4 DOOR MODEL

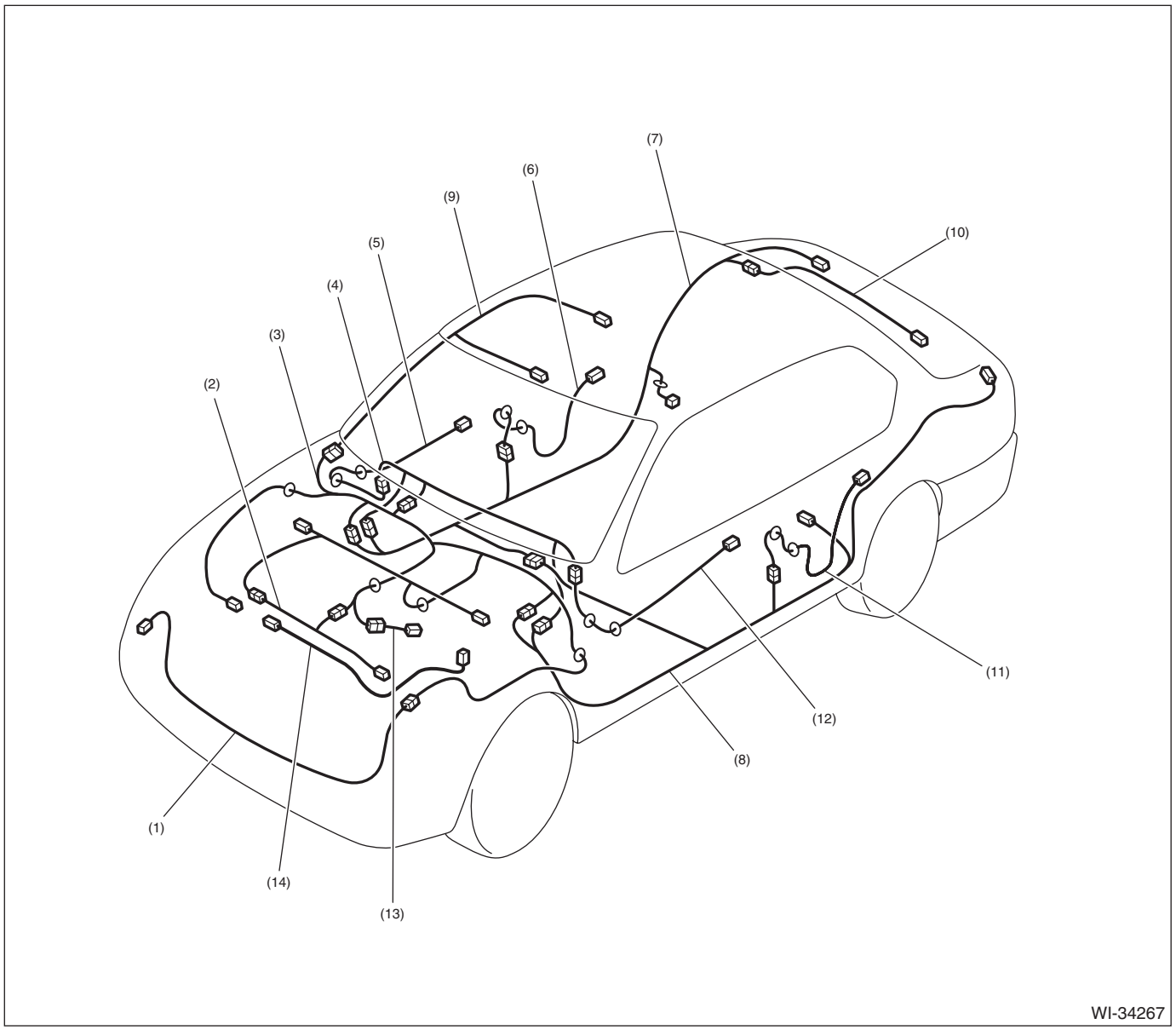

(1) Front wiring harness
(2) Engine wiring harness
(3) Bulkhead wiring harness
(4) Instrument panel wiring harness
(5) Front door cord RH
(6) Rear door cord RH
(7) Rear wiring harness RH
(8) Rear wiring harness LH
(9) Roof cord
(10) Trunk lid cord
(11) Rear door cord LH
(12) Front door cord LH
(13) Transmission cord
(14) Generator cord

2. 5 DOOR MODEL/XV MODEL

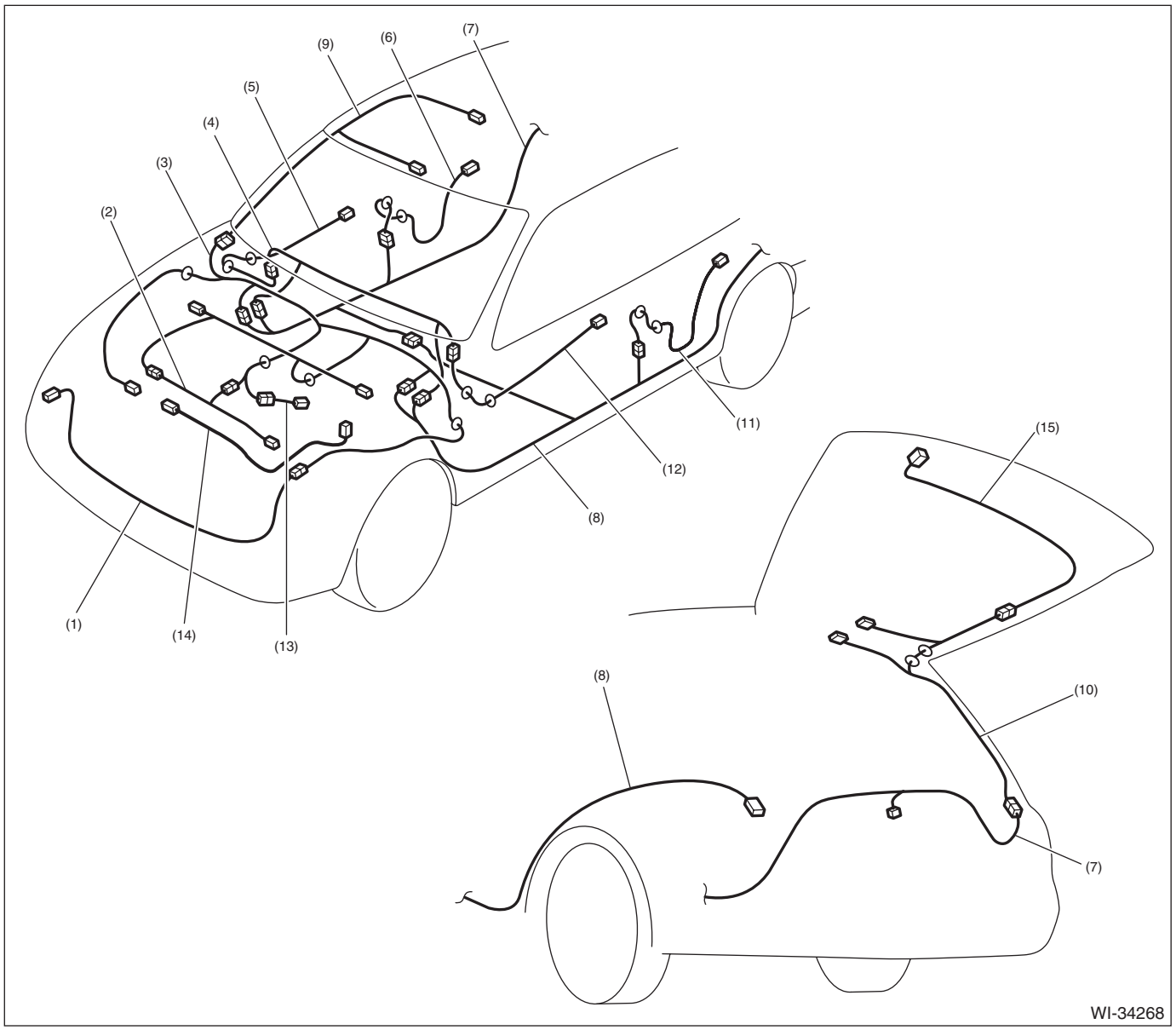

(1) Front wiring harness
(2) Engine wiring harness
(3) Bulkhead wiring harness
(4) Instrument panel wiring harness
(5) Front door cord RH
(6) Rear door cord RH
(7) Rear wiring harness RH
(8) Rear wiring harness LH
(9) Roof cord
(10) Rear gate cord
(11) Rear door cord LH
(12) Front door cord LH
(13) Transmission cord
(14) Generator cord
(15) Rear gate cord

58.Front Wiring Harness

A: LOCATION

Connector				Connecting to	
No.	Pole	Color	Area	No.	Description
F5	1	Black	C-1		Horn
F6	2	★	C-1		Front fog light RH (without SRF)
	2	Black	C-1		Front fog light RH (with SRF)
F16	2	★	C-1		Sub fan motor
F17	2	★	D-2		Main fan motor
F21	2	★	D-4		Front fog light LH (without SRF)
	2	Black	D-4		Front fog light LH (with SRF)
F24	1	★	C-3		Magnet clutch
F25	1	★	B-2		Generator terminal B
F26	3	★	B-2		Generator
F27	26	★	C-4		Relay holder
F35	12	Blue	B-5		M/B
F36	7	★	C-5		
F37	20	★	B-5		
F47	1	Black	C-2		Horn
F78	2	Black	D-2		Ambient sensor
F103	2	Gray	C-1		Daytime running light resistor
F108	18	Gray	B-4	B361	Through joint connector
F109	24	★	B-4	B360	
F125	8	Light gray	C-3		Front combination light LH
F126	8	Light gray	C-1		Front combination light RH
F148	2	★	C-3		High beam LH
F149	2	★	B-1		High beam RH
★: White or natural color					

Front Wiring Harness

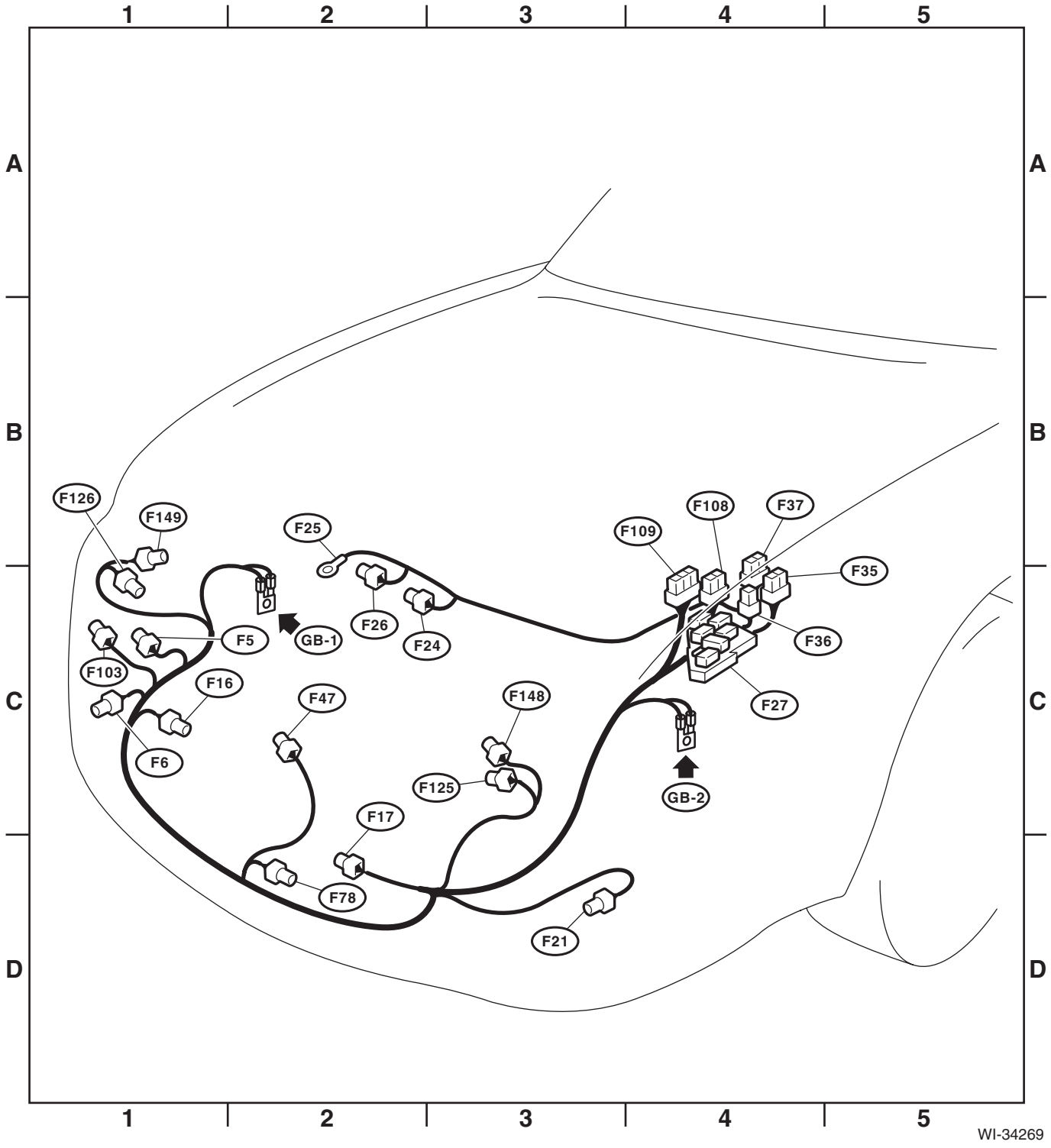

59.Bulkhead Wiring Harness (In Engine Compartment)

A: LOCATION

Connector				Connecting to	
No.	Pole	Color	Area	No.	Description
B3	5	Black	B-2		Mass air flow and intake air temperature sensor
B6	2	Light gray	C-3		Front ABS wheel speed sensor RH
B8	5	Light gray	B-5		Front wiper motor
B10	4	Light gray	C-4		Pressure switch
B11	12	Light gray	B-4	T4	Transmission cord (CVT model)
B12	16	Dark gray	B-4	T3	
B14	1	Black	C-4		Starter motor
B15	2	Light gray	C-4		Front ABS wheel speed sensor LH
B16	2	Gray	B-4		Brake fluid level switch
B21	54	Black	B-3	E2	Engine wiring harness
B22	16	Brown	B-3		
B24	2	Gray	B-3	T1	Back-up light switch (MT model)
B25	2	Brown	B-3	T2	Neutral position switch 1
B143	20	★	B-5		M/B
B144	9	Brown	B-5		
B145	7	Brown	B-5		
B146	2	Black	C-4		Front washer motor
B147	2	Gray	C-4		Rear washer motor
B164	2	Gray	B-2		Keyless buzzer
B177	2	Gray	B-4		Wiper deicer
B186	8	★	B-5		M/B
B310	26	Black	B-2		VDC CM (with EyeSight)
	38	★	B-2		VDC CM (without EyeSight)
B321	2	Black	B-3		Hood switch
B360	16	Gray	B-4	F109	Through joint connector
B361	14	★	B-4	F108	
B396	2	Brown	D-3		Washer fluid level sensor
B432	8	Black	C-4		SBF holder
B450	10	Black	C-3		Power steering CM
B451	6	Gray	B-3		Torque sensor
B452	2	Black	B-3		Power steering CM
B523	2	Light gray	C-5		Battery temperature sensor
B538	3	Black	C-4		Battery current sensor
B567	26	★	B-3		Relay holder
B571	2	★	B-5		M/B
★: White or natural color					

Connector				Connecting to	
No.	Pole	Color	Area	No.	Description
AB13	2	Yellow	C-3		Front sub sensor LH
AB16	2	Yellow	B-1		Front sub sensor RH

Bulkhead Wiring Harness (In Engine Compartment)

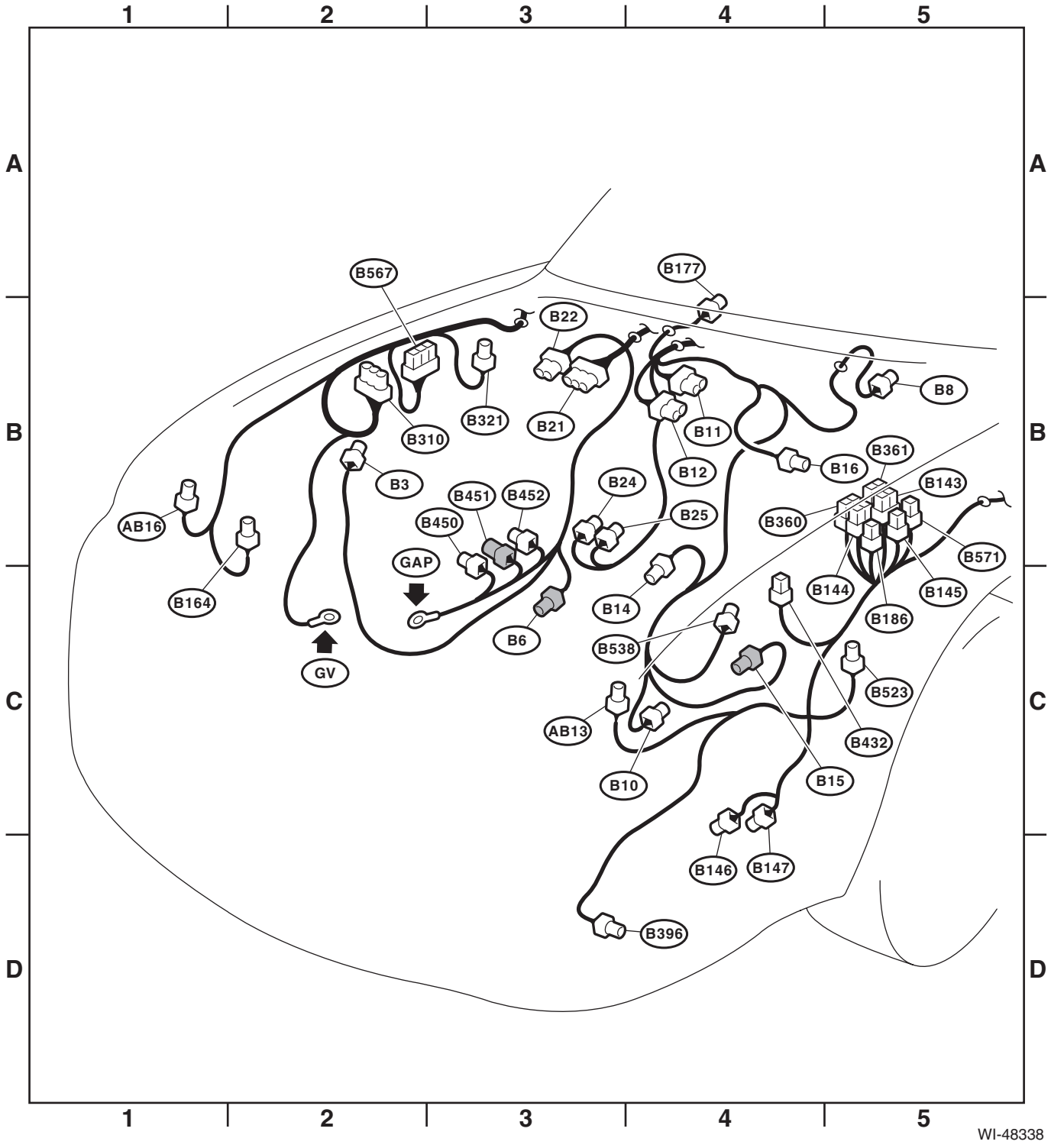

60.Bulkhead Wiring Harness (In Compartment)

A: LOCATION

Connector				Connecting to	
No.	Pole	Color	Area	No.	Description
B27	4	★	B-4		Blower Resistor (manual A/C)
B30	8	Black	C-5		Front door cord RH
B31	10	Gray	C-1	AB1	Airbag wiring harness
B32	8	★	B-2		Turn signal and hazard unit
B40	16	Black	C-1		Data link connector
B41	2	★	C-2		Power window circuit breaker
B52	24	★	D-1		F/B
B54	48	Black	B-2		TCM
B57	4	★	B-4		Power transistor (auto A/C)
B65	4	★	B-2		Stop light and brake switch
B68	14	★	B-3		Roll connector
B70	10	★	B-3		Combination switch
B71	20	★	B-3		
B72	6	★	C-3		Ignition switch
B77	6	★	C-4		Mode door actuator (auto A/C)
B83	8	★	B-4		J/C
B87	2	★	B-5		Blower motor
B88	2	Brown	C-4		Evaporator sensor (auto A/C)
	3	★	C-4		Evaporator sensor (manual A/C)
B89	2	Black	B-5		Blower diode
B90	20	★	B-5	R50	Roof cord
B92	20	★	D-1	R5	Rear wiring harness LH
B97	20	★	C-5	R1	Rear wiring harness RH
B99	20	★	D-1	R3	Rear wiring harness LH
B101	8	Black	C-1		Front door cord LH
B106	2	★	C-3		Clutch start switch
B107	2	Blue	C-3		Clutch switch
B116	8	★	C-4		AT select lever
B122	8	★	B-5		J/C
B123	2	Black	C-1	B124	Key lock
B124	2	Black	C-1	B123	
B134	34	★	C-4		ECM
B135	35	★	C-5		
B136	35	★	C-5		
B137	31	★	C-5		
B150	24	★	C-1		Auto headlight beam leveler CM
B151	6	★	B-5	R430	Roof cord
B152	10	Gray	D-1		F/B
B158	8	★	D-1		
B159	9	Brown	D-2		
B162	2	★	D-2		
B163	6	Black	B-5		Intake door actuator
B180	4	★	C-2		Remote engine start CM (without push button start)
	8	★	C-2		Remote engine start CM (with push button start)
B181	2	★	C-2	B182	Bulkhead wiring harness
B182	2	★	C-2	B181	

Connector				Connecting to	
No.	Pole	Color	Area	No.	Description
B220	44	★	B-5		Relay holder
B225	44	★	C-2		
B231	5	★	B-3		Steering angle sensor
B235	6	★	C-4		Air mix door actuator LH (with left/right independent air conditioner)
B239	6	★	B-4		Air mix door actuator (without left/right independent air conditioner)
					Air mix door actuator RH (with left/right independent air conditioner)
B280	34	★	C-1		Body integrated unit
B281	35	★	C-2		
B315	6	Black	C-4		Accelerator pedal position sensor
B358	2	★	C-4		AT select lever illumination
B367	8	★	C-2		Impact sensor
B386	4	★	B-5		Blower motor relay
B415	7	Black	C-3		Immobilizer antenna
B422	5	★	B-3		ID code box
B424	7	Black	C-3		Steering lock CM
B426	4	Black	C-2		Accessory relay
B475	4	★	D-1		Wiper relay unit
B550	20	★	D-2		Fuse holder
B551	12	★	C-2	i229	Instrument panel wiring harness LH
B552	17	★	C-2	i230	
B553	20	★	D-2	i231	
B555	2	★	C-3		Key warning switch
B556	2	★	C-4	AB65	Airbag wiring harness
B557	2	★	C-3		Key lock solenoid
B558	7	★	B-3		Combination switch
B559	5	★	B-3		Security CM
B572	18	★	C-2		Keyless access CM
B573	28	★	C-2		
B574	30	★	C-2		
B575	22	★	C-1	B576	Bulkhead wiring harness
B576	22	★	C-1	B575	
B577	10	★	C-1	B578	
B578	10	★	C-1	B577	
B579	2	★	C-4		Keyless access interior antenna (front)
B583	12	★	B-5	i237	Instrument panel wiring harness RH
B584	20	★	B-5	i238	
★: White or natural color					

Connector				Connecting to	
No.	Pole	Color	Area	No.	Description
AB1	10	Gray	C-1	B31	Bulkhead wiring harness
AB2	4	Yellow	B-3	AB7	Driver's airbag module
AB6	30	Yellow	C-4		Airbag CM
AB9	4	Yellow	C-4		Passenger's airbag module
AB65	2	★	C-4	B556	Bulkhead wiring harness
AB66	2	Black	D-2		Driver's knee airbag module
★: White or natural color					

Bulkhead Wiring Harness (In Compartment)

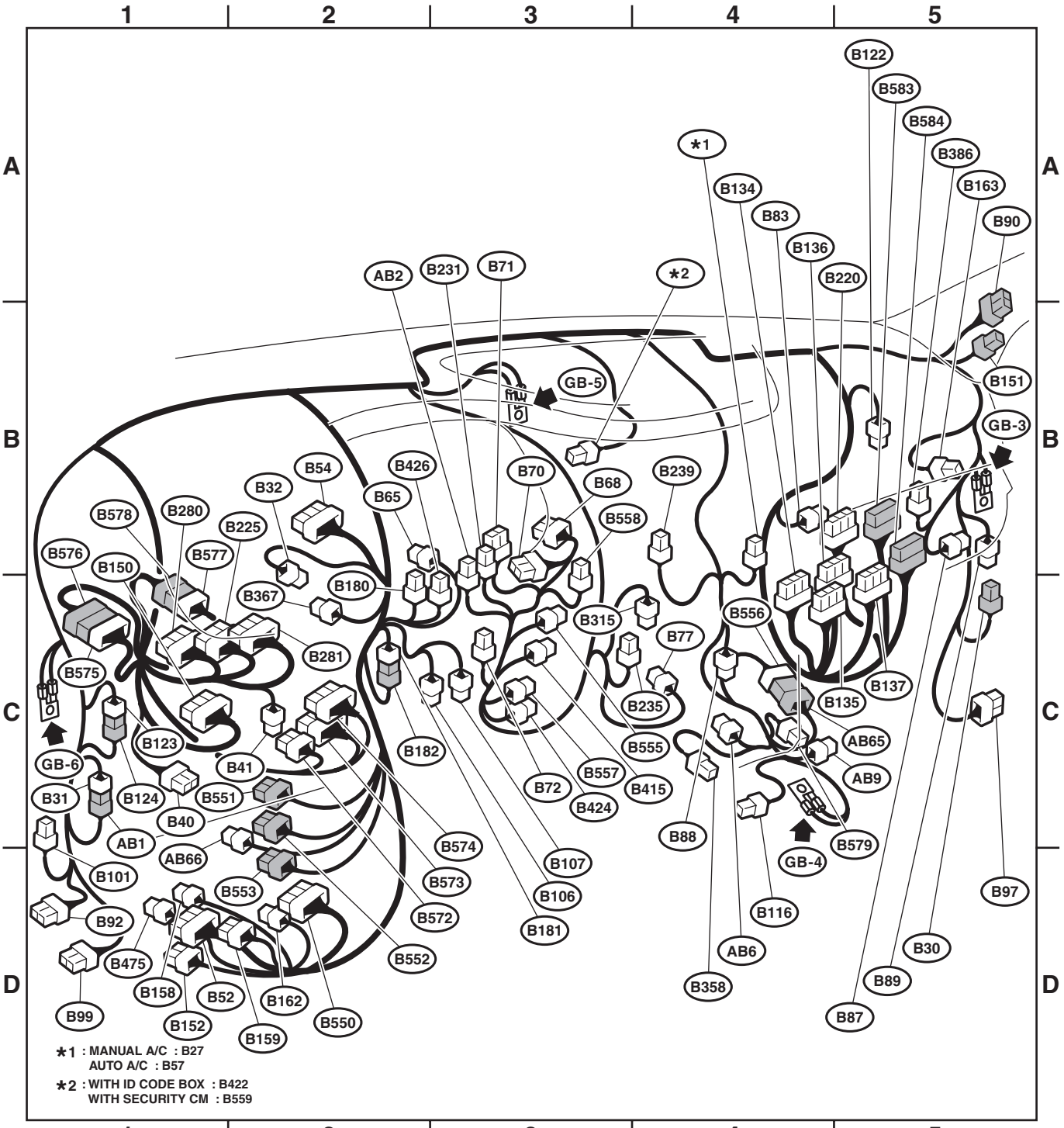

WI-48339

61.Engine Wiring Harness and Transmission Cord

A: LOCATION

Connector				Connecting to	
No.	Pole	Color	Area	No.	Description
E2	54	Black	A-3	B21	Bulkhead wiring harness
E3	16	Brown	A-3	B22	
E4	2	Blue	B-4		Purge control solenoid valve
E5	2	Dark gray	B-2		Fuel injector No. 1
E6	2	Dark gray	A-2		Fuel injector No. 3
E8	2	Black	B-2		Engine coolant temperature sensor
E10	3	Black	B-3		Crankshaft position sensor
E11	1	—	B-3		Oil pressure switch
E14	2	Black	B-3		Knock sensor
E16	2	Dark gray	B-4		Fuel injector No. 2
E17	2	Dark gray	B-4		Fuel injector No. 4
E18	6	Dark gray	A-3		EGR control valve
E21	3	Black	A-3		Manifold absolute pressure sensor
E24	4	Light gray	B-1		Front oxygen (A/F) sensor
E25	4	Black	B-1		Rear oxygen sensor
E31	3	Black	B-2		Ignition coil No. 1
E32	3	Black	B-4		Ignition coil No. 2
E33	3	Black	A-2		Ignition coil No. 3
E34	3	Black	B-4		Ignition coil No. 4
E35	3	Light gray	C-3		Intake camshaft position sensor LH
E36	3	Light gray	B-1		Intake camshaft position sensor RH
E37	2	Black	C-3		Intake oil control solenoid LH
E38	2	Black	B-1		Intake oil control solenoid RH
E51	5	Light gray	B-4		Tumble generator valve actuator LH
E55	5	Light gray	A-2		Tumble generator valve actuator RH
E57	6	Black	A-3		Electronic throttle control
E62	3	Light gray	B-1		Exhaust camshaft position sensor RH
E63	2	Black	B-1		Exhaust oil control solenoid RH
E65	3	Light gray	B-3		Exhaust camshaft position sensor LH
E66	2	Black	C-3		Exhaust oil control solenoid LH
E75	2	Black	B-3		Engine oil temperature sensor
E130	1	★	B-3		Oil level switch
★: White or natural color					

- **MT model**

Connector				Connecting to	
No.	Pole	Color	Area	No.	Description
T1	2	Gray	C-1	B24	Bulkhead wiring harness
T2	2	Brown	C-1	B25	

- **CVT model**

Connector				Connecting to	
No.	Pole	Color	Area	No.	Description
T3	16	Dark gray	D-4	B12	Bulkhead wiring harness
T4	12	Gray	D-4	B11	
T7	9	Black	D-4		Inhibitor switch
AT1	3	Black	D-4		Primary speed sensor
AT4	3	Dark gray	D-5		Secondary speed sensor
AT5	3	Light gray	D-5		Turbine speed sensor
AT6	3	Black	D-4		Secondary pressure sensor

Engine Wiring Harness and Transmission Cord

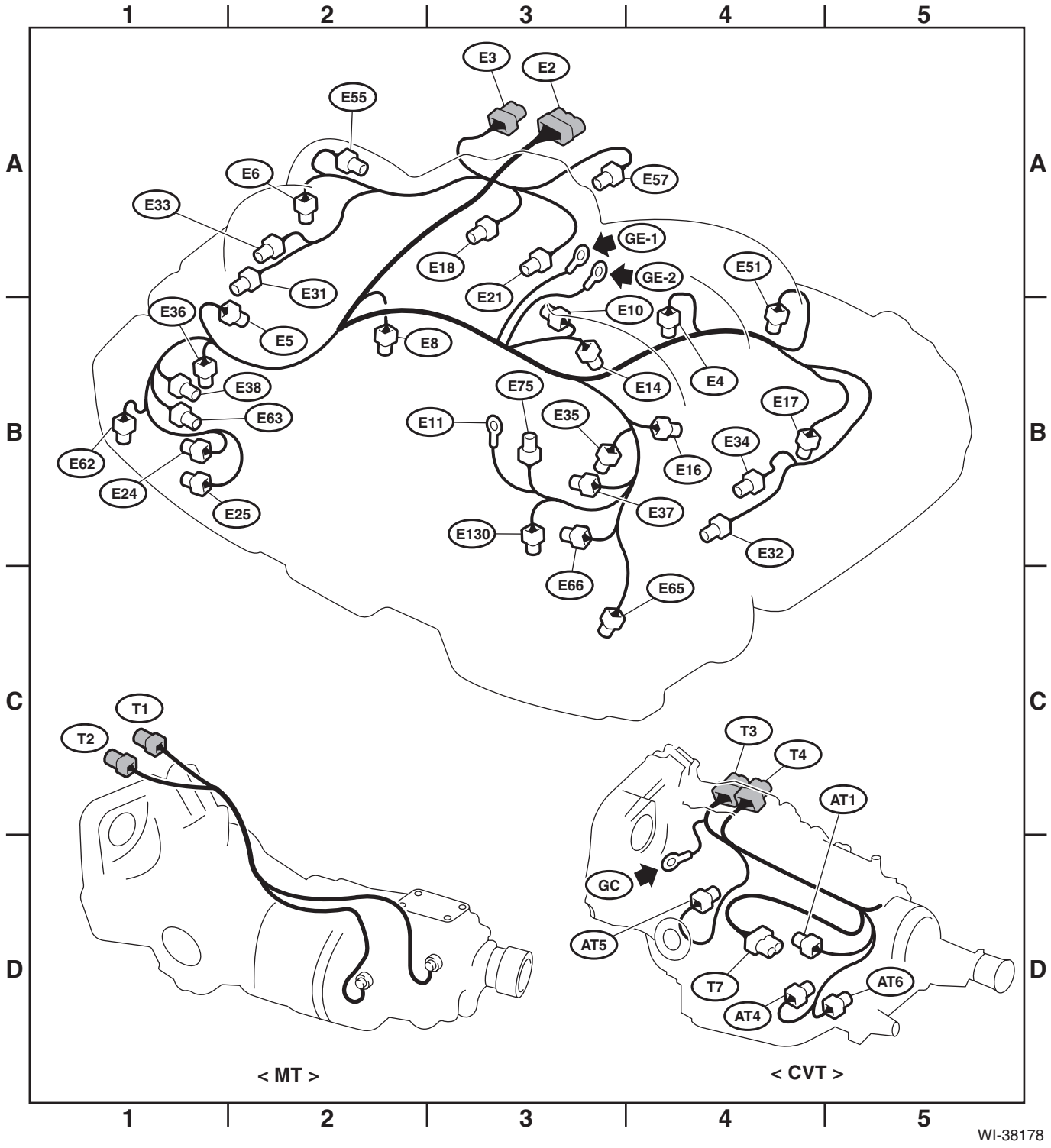

62.Instrument Panel Wiring Harness

A: LOCATION

Connector				Connecting to	
No.	Pole	Color	Area	No.	Description
i2	10	★	D-1	R339	Rear wiring harness LH
i5	20	★	C-1		F/B
i7	4	Gray	B-4		MFD switch
i10	40	★	B-3		Combination meter
i15	6	★	C-4		Blower fan switch (manual A/C)
i16	16	★	B-4		A/C control panel (manual A/C)
i22	4	★	B-4		Hazard switch
i23	2	★	B-5		Glove box light
i24	2	★	C-4		Front accessory power supply socket
i28	4	Gray	C-1		OP connector (fog light switch)
i29	1	★	B-4		Audio bracket ground
i51	2	★	B-3		Sunload sensor
i53	24	★	B-5	R98	Rear wiring harness RH
i55	2	★	C-3		In-vehicle sensor
i76	28	★	B-5	D83	Front door cord RH
i79	6	★	C-1		Illumination control switch
i84	35	Black	C-1		Body integrated unit
i85	10	★	B-4		Audio
	10	★	B-4		Navigation unit
i87	28	★	B-4		Audio
	28	★	B-4		Navigation unit
i88	40	★	C-4		A/C control panel (auto A/C)
i92	4	Gray	C-1		SRF OFF switch
i101	28	★	C-1	D84	Front door cord LH
i102	24	★	D-1	R167	Rear wiring harness LH
i122	12	Black	B-4		MFD
i131	6	★	B-4		Audio
	6	★	B-4		Navigation unit
i146	5	★	B-4		Audio
	5	★	B-4		Navigation unit
i150	14	★	B-3		Push button ignition switch
i158	4	★	B-1		Side tweeter LH
i159	4	★	A-5		Side tweeter RH
i166	4	★	B-1		J/C
i167	4	★	B-1		
i168	4	★	B-5		
i169	4	★	B-5		
i171	31	★	C-1		Body integrated unit
i192	28	★	B-4		Audio
i195	10	★	C-5	R382	Rear wiring harness RH
i226	3	★	A-4		Light control sensor
i229	12	★	C-2	B551	Bulkhead wiring harness LH
i230	17	★	C-2	B552	
i231	20	★	C-2	B553	
i232	8	★	B-3		J/C
i233	8	★	B-4		

Instrument Panel Wiring Harness

Connector				Connecting to	
No.	Pole	Color	Area	No.	Description
i234	4	★	C-2		VDC OFF switch
i237	12	★	B-4	B583	Bulkhead wiring harness RH
i238	20	★	B-4	B584	
★ White or natural color					

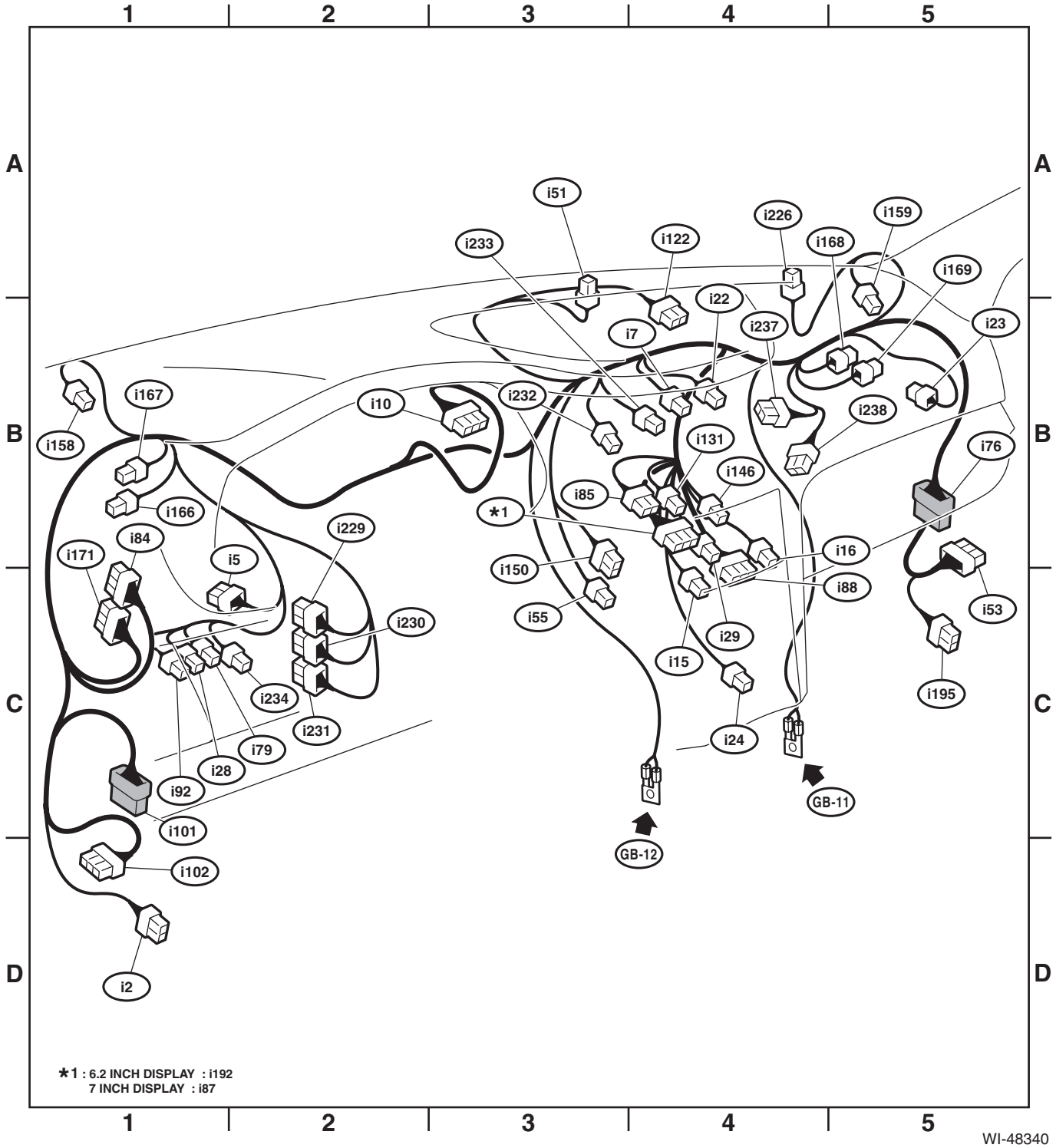

63.Rear Wiring Harness

A: LOCATION

Connector				Connecting to	
No.	Pole	Color	Area	No.	Description
R1	20	★	B-2	B97	Bulkhead wiring harness
R3	20	★	C-3	B99	
R4	1	Black	B-4		Parking brake switch
R5	20	★	C-3	B92	Bulkhead wiring harness
R9	3	★	C-4		Front door switch LH
R10	8	★	B-4	D22	Rear door cord LH
R12	3	★	B-3		Front door switch RH
R13	8	★	B-3	D28	Rear door cord RH
R32	2	★	B-4		Rear accessory power supply socket
R41	4	★	C-4		Seat heater LH
R43	8	★	B-4		Seat heater switch
R44	4	★	B-3		Seat heater RH
R50	20	★	B-2	B90	Bulkhead wiring harness
R52	3	★	A-4		Room light
R55	8	★	B-4		Sunroof motor assembly
R56	2	★	B-3		Spot map light (with sunroof)
	6	★	B-3		Spot map light (without sunroof)
R62	6	★	B-3		Spot map light (with sunroof)
R64	3	★	A-3		Spot map light diode (with sunroof)
R81	19	Black	C-3	R82	Rear wiring harness RH
R82	19	Black	B-3	R81	Rear wiring harness LH
R98	24	★	B-2	i53	Instrument panel wiring harness
R107	2	★	C-4		Seat belt switch LH
R123	2	Yellow	C-3	AB62	Front door cord LH
R124	2	Yellow	B-2	AB63	Front door cord RH
R128	5	★	B-4		Sunroof switch
R137	16	★	B-3		Stereo camera
R139	3	★	A-3		Rear view mirror
R167	24	★	C-3	i102	Instrument panel wiring harness
R168	20	★	C-3		F/B
R187	5	Black	A-3		Sunroof switch (tilt)
R284	8	★	B-4		AUX input terminal
R382	10	★	B-2	i195	Instrument panel wiring harness
R405	12	★	B-4	R407	Stereo camera cover
R430	6	★	B-2	B151	Bulkhead wiring harness
★: White or natural color					

Connector				Connecting to	
No.	Pole	Color	Area	No.	Description
AB17	15	Yellow	C-2		Airbag CM (except for XV model)
	24	Yellow	C-2		Airbag CM (XV model)
AB18	15	Yellow	C-2		Airbag CM (except for XV model)
	24	Yellow	C-2		Airbag CM (XV model)
AB19	4	Yellow	C-3		Side airbag module LH
AB21	2	Black	C-4		Pretensioner LH
AB23	4	Yellow	C-4		Side airbag sensor LH

Connector				Connecting to	
No.	Pole	Color	Area	No.	Description
AB24	4	Yellow	B-2		Side airbag module RH
AB26	2	Black	B-2		Pretensioner RH
AB28	4	Yellow	B-2		Side airbag sensor RH
AB30	2	Yellow	B-3		Lap seat belt pretensioner RH (XV model)
AB35	2	Black	C-3		F/B
AB53	3	Dark gray	B-2		Occupant detection control module

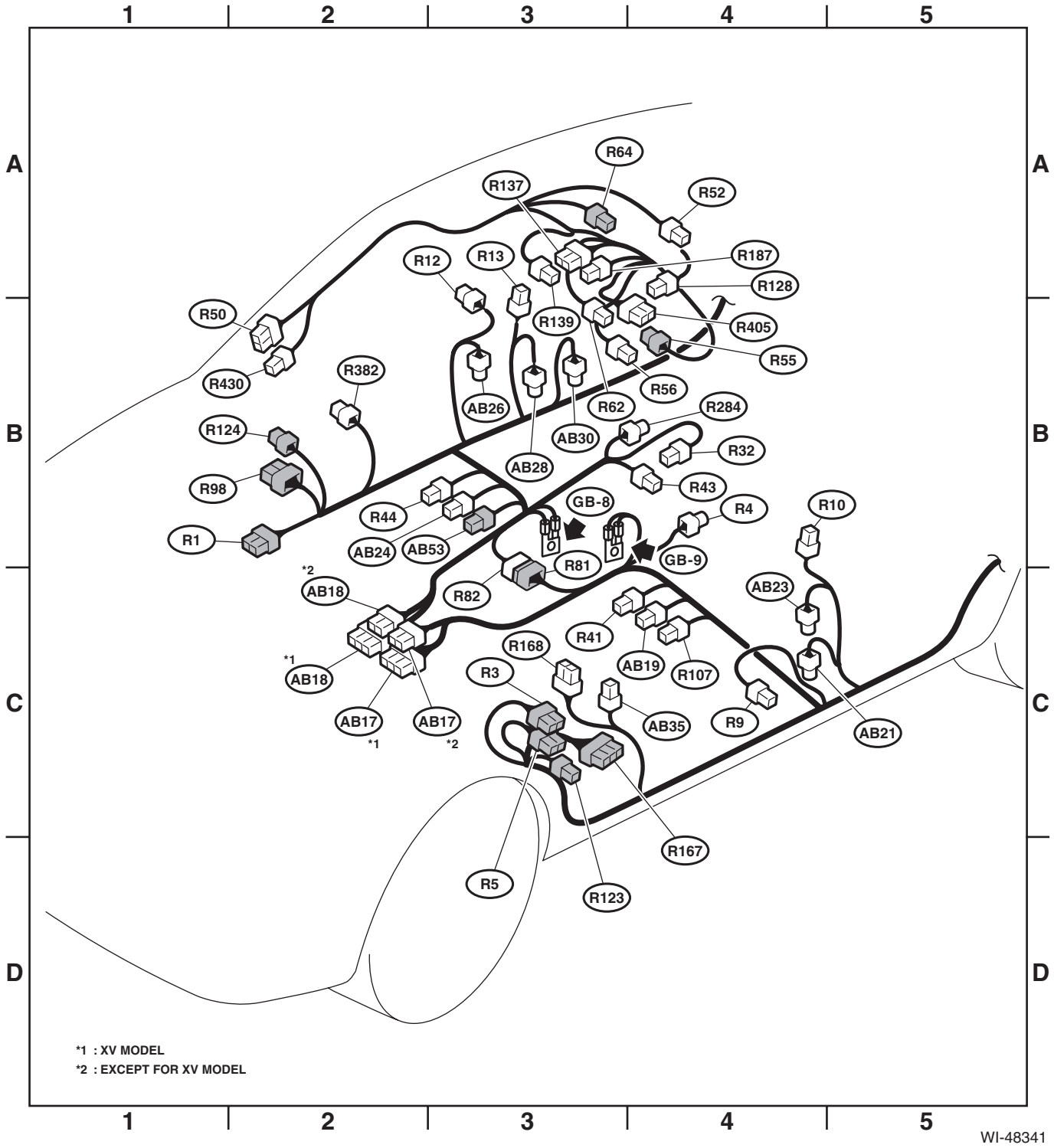

64.Door Cord

A: LOCATION

Connector				Connecting to	
No.	Pole	Color	Area	No.	Description
D1	8	Black	C-2	B30	Bulkhead wiring harness
D2	2	★	C-4		Front door speaker LH
D3	6	Dark gray	C-4		Front power window motor LH
D5	10	★	B-3		Outer mirror assembly LH
D7	16	★	B-4		Power window main switch
D11	8	Black	C-3	B101	Bulkhead wiring harness
D12	2	★	B-2		Front door speaker RH
D13	6	Dark gray	B-3		Front power window motor RH
D15	10	★	B-2		Outer mirror assembly RH
D17	8	★	B-2		Front power window sub-switch
D18	10	★	B-3		Front door lock actuator RH
D22	8	★	B-4	R10	Rear wiring harness LH
D23	2	★	C-4		Rear door speaker LH
D24	6	Dark gray	B-5		Rear power window motor LH
D25	8	★	B-5		Rear power window sub-switch LH
D26	10	★	B-5		Rear door lock actuator LH
D28	8	★	B-3	R13	Rear wiring harness RH
D29	2	★	B-3		Rear door speaker RH
D30	6	Dark gray	B-3		Rear power window motor RH
D31	8	★	B-3		Rear power window sub-switch RH
D32	10	★	A-3		Rear door lock actuator RH
D56	6	★	B-3		Outer handle RH
D66	6	★	B-4		Outer handle LH
D72	10	★	B-4		Front door lock actuator LH
D83	28	★	B-1	i76	Instrument panel wiring harness
D84	28	★	C-3	i101	
D102	3	★	B-4		Power window main switch
D125	5	★	B-2		Passenger's seat door lock switch
D149	16	★	B-4		Remote control mirror switch
★: White or natural color					

Connector				Connecting to	
No.	Pole	Color	Area	No.	Description
AB58	2	Yellow	C-4		Front door impact sensor LH
AB62	2	Yellow	C-3	R123	Rear wiring harness LH
AB63	2	Yellow	C-1	R124	Rear wiring harness RH
AB64	2	Yellow	B-3		Front door impact sensor RH

Door Cord

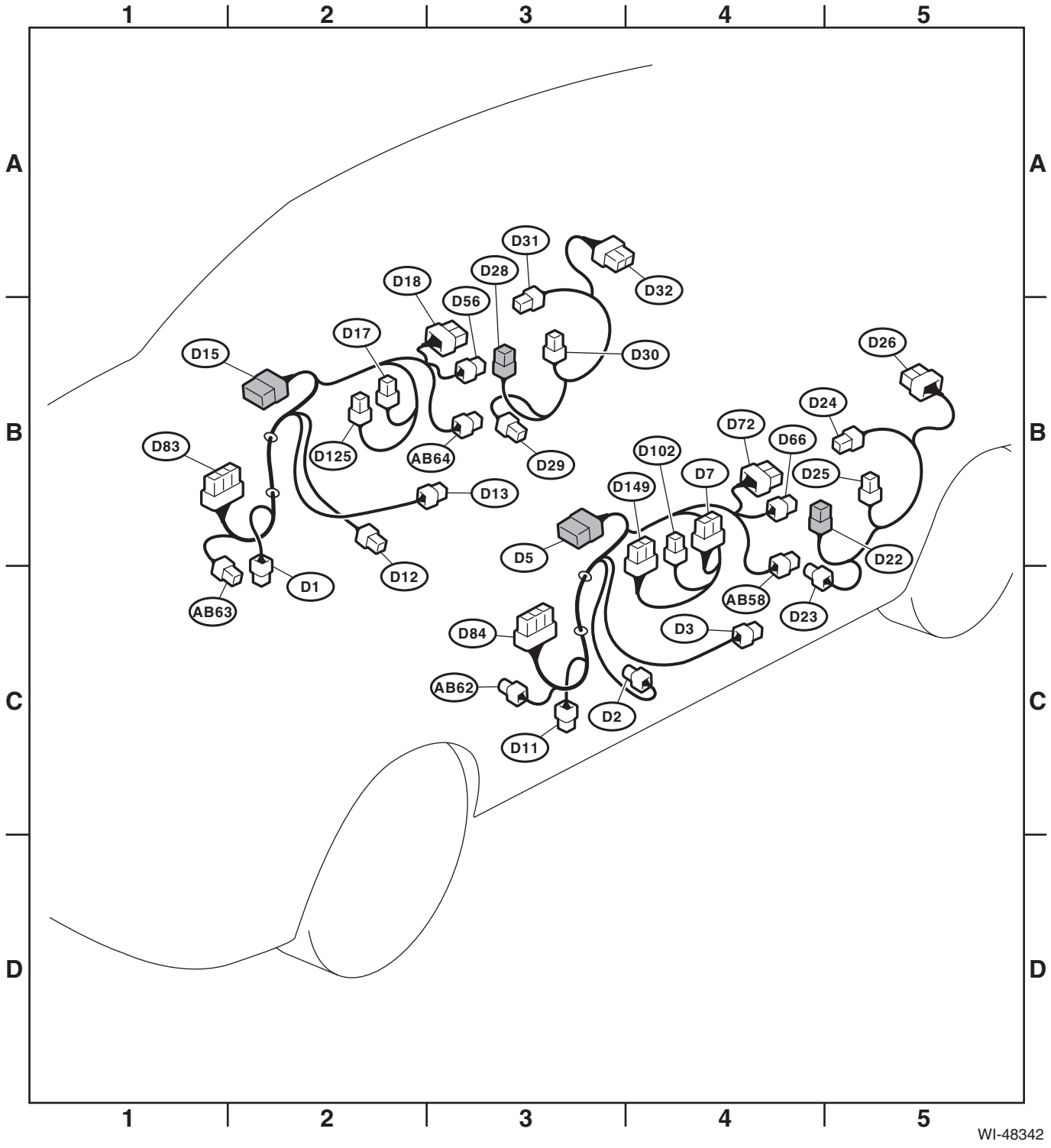
1
2
3
4
5
A
B
C
D
D31
D28
D18
D56
D32
D17
D15
D30
D26
D24
D72
D66
D83
D125
AB64
D29
D102
D7
D25
D13
D149
D5
D22
D12
D1
AB58
AB63
D23
D84
D3
AB62
D2
D11
WI-48342

65.Rear Wiring Harness and Trunk Lid Cord

A: LOCATION

Connector				Connecting to	
No.	Pole	Color	Area	No.	Description
R16	3	★	B-3		Rear door switch RH
R19	2	★	B-3		High-mounted stop light
R20	2	Black	B-4		Trunk room light
R22	3	★	B-1		Rear door switch LH
R24	12	★	B-5	R60	Trunk lid cord
R26	6	★	B-5		Rear combination light RH (4 door model)
		Gray			Rear combination light RH (5 door model/XV model)
R28	6	★	C-3		Rear combination light LH (4 door model)
		Gray			Rear combination light LH (5 door model/XV model)
R29	3	Black	C-3		Rear vehicle height sensor
R58	4	★	C-4		Fuel pump assembly
R59	2	★	C-3		Fuel sub level sensor
R60	12	★	B-5	R24	Rear wiring harness RH
R65	1	Black	B-2		Rear defogger
R66	2	★	B-5		High-mounted stop light (rear spoiler)
R72	2	Light gray	B-2		Rear ABS wheel speed sensor RH
R73	2	Light gray	C-2		Rear ABS wheel speed sensor LH
R76	2	★	C-4		License plate light LH
R77	2	★	C-4		License plate light RH
R80	8	★	C-3		Keyless entry CM
R97	1	★	B-2		Antenna feeder cord
R174	1	★	B-4		Rear defogger
R186	3	★	C-4		Trunk lid lock actuator & switch
R211	12	★	C-2		TPMS CM
R221	12	★	C-3		TPMS & keyless entry CM
R294	2	Brown	C-4		Trunk opener button
R296	5	★	C-3		Receiver
R297	3	★	B-3		Keyless access interior antenna (rear)
R298	3	★	B-3		Keyless access interior antenna (center)
R299	6	★	C-4		Keyless access exterior antenna (rear)
R400	8	Gray	C-3		ELCM
★: White or natural color					

Connector				Connecting to	
No.	Pole	Color	Area	No.	Description
AB31	2	Black	B-2		Curtain airbag module LH
AB32	4	Yellow	B-1		Curtain airbag sensor LH
AB33	2	Black	B-4		Curtain airbag module RH
AB34	4	Yellow	B-3		Curtain airbag sensor RH
AB41	2	Yellow	C-3		Satellite safing sensor

Rear Wiring Harness and Trunk Lid Cord

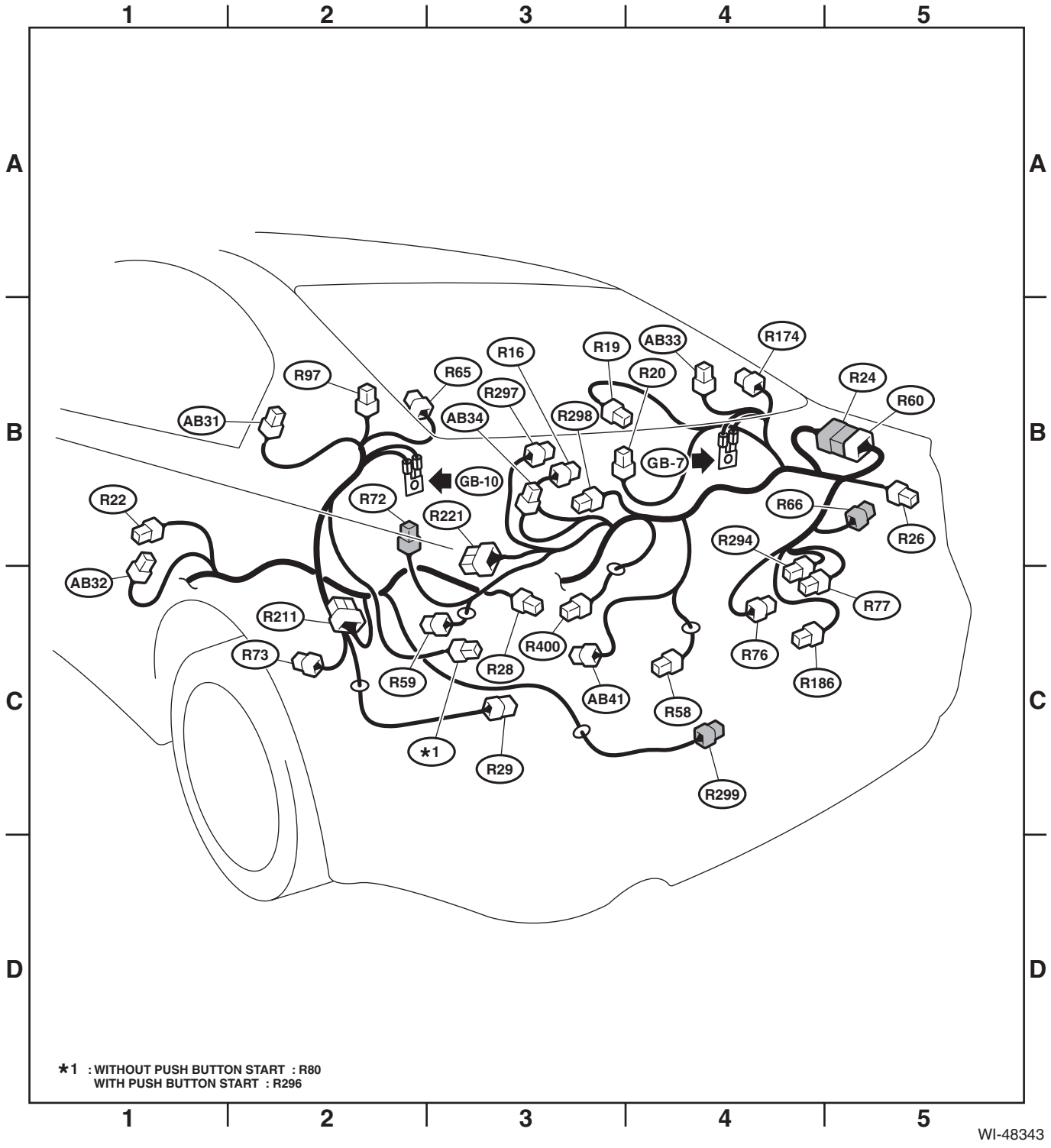

66.Rear Wiring Harness and Rear Gate Cord

A: LOCATION

Connector				Connecting to	
No.	Pole	Color	Area	No.	Description
R16	3	★	C-3		Rear door switch RH
R22	3	★	C-1		Rear door switch LH
R26	6	Gray	C-4		Rear combination light RH
R28	6	Gray	C-3		Rear combination light LH
R29	3	Black	D-2		Rear vehicle height sensor
R38	8	★	C-4	D34	Rear gate cord
R39	14	Gray	C-4	D35	
R58	4	★	C-3		Fuel pump assembly
R59	2	★	C-3		Fuel sub level sensor
R72	2	Light gray	C-3		Rear ABS wheel speed sensor RH
R73	2	Light gray	C-2		Rear ABS wheel speed sensor LH
R79	8	★	C-3		Trailer connector
R80	8	★	C-2		Keyless entry CM
R97	1	★	C-3		Antenna feeder cord
R141	2	Light gray	C-2		Luggage room light
R211	12	★	C-2		TPMS CM
R221	12	★	C-2		TPMS & keyless entry CM
R296	5	★	C-2		Receiver
R298	3	★	C-3		Keyless access interior antenna (rear)
R299	6	★	C-4		Keyless access exterior antenna (rear)
R400	8	Gray	C-3		ELCM
★: White or natural color					

Connector				Connecting to	
No.	Pole	Color	Area	No.	Description
D34	8	★	B-4	R38	Rear wiring harness RH
D35	14	Gray	B-4	R39	
D39	2	★	B-4		High-mounted stop light
D43	4	★	A-4		Rear wiper motor
D44	2	★	B-4		License plate light RH
D46	4	★	A-4		Rear gate lock actuator & latch switch
D47	2	Brown	A-4		Rear gate opener button
D48	1	Black	B-3		Rear defogger
D77	4	★	A-4		Rear lock button & rear gate opener button
D80	8	★	B-5	D81	Rear gate cord
D81	8	★	B-5	D80	
D89	1	Black	B-4		Rear defogger
D137	2	★	B-4		License plate light LH
★: White or natural color					

Connector				Connecting to	
No.	Pole	Color	Area	No.	Description
AB31	2	Black	C-2		Curtain airbag module LH
AB32	4	Yellow	C-1		Curtain airbag sensor LH
AB33	2	Black	C-4		Curtain airbag module RH
AB34	4	Yellow	C-3		Curtain airbag sensor RH
AB41	2	Yellow	C-2		Satellite safing sensor

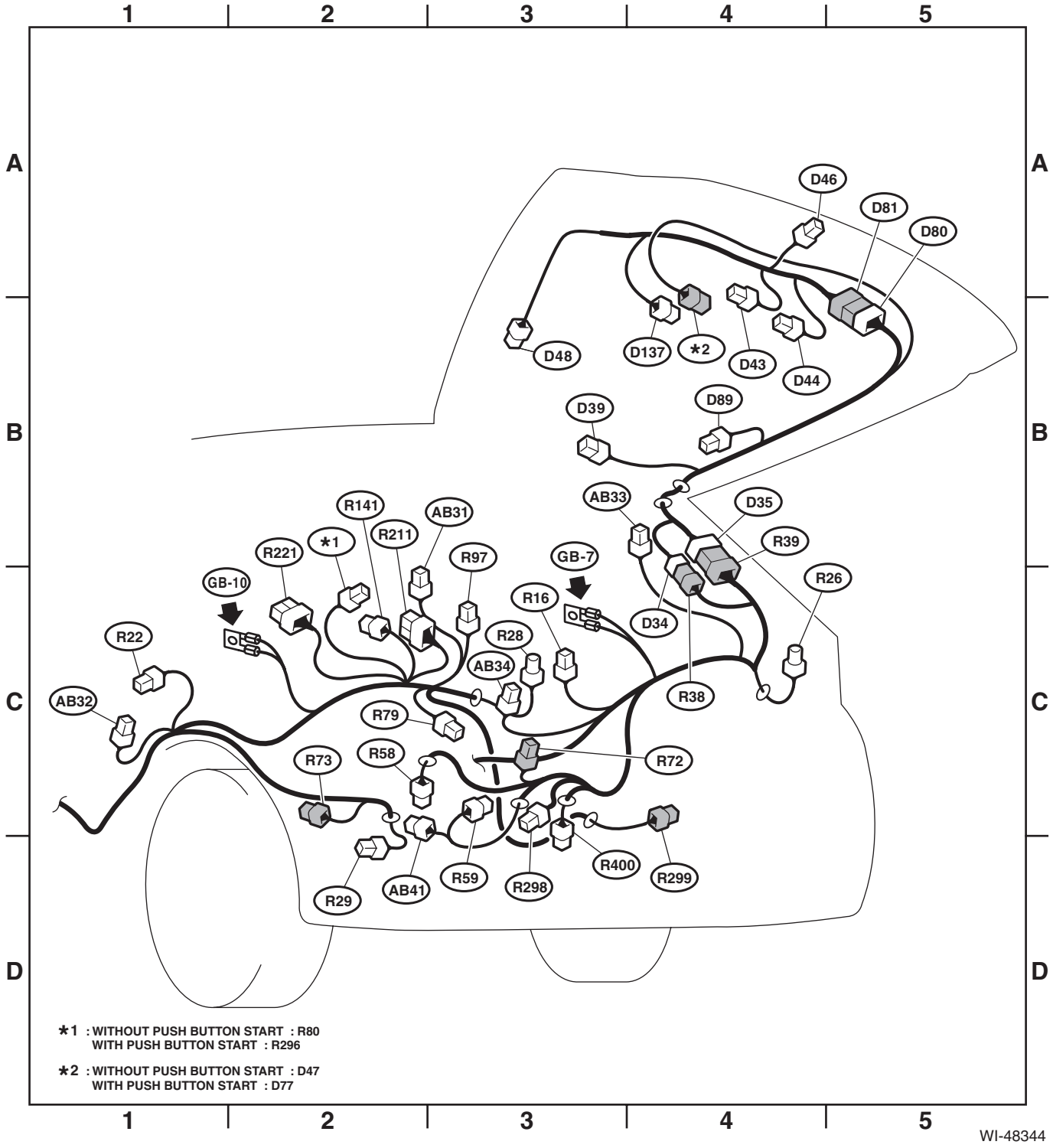

WIRING SYSTEM

WI(HEV)

		Page
1.	Basic Diagnostic Procedure	3
2.	Working Precautions	15
3.	Power Supply Circuit	21
4.	Ground Circuit	40
5.	Active Grille Shutter	50
6.	Airbag System	51
7.	Air Conditioning System	56
8.	Audio System	61
9.	Back-up Light System	64
10.	CAN Communication System	65
11.	Charging System	68
12.	Clearance Light and Illumination Light System	70
13.	Combination Meter System	75
14.	Coolant Temperature System	80
15.	Cruise Control System	82
16.	CVT Control System	86
17.	Electric Power Steering System	98
18.	Engine Electrical System	100
19.	Front Accessory Power Supply Socket System	128
20.	Front Fog Light System	129
21.	Front Wiper and Washer System	131
22.	Fuel Gauge System	133
23.	Headlight Beam Leveler System	134
24.	Headlight System	136
25.	Hybrid Electric Vehicle System	140
26.	Horn System	150
27.	Immobilizer System	151
28.	Interior Light System	155
29.	Keyless Access System	158
30.	Keyless Entry System	165
31.	Multi-function Display (MFD) System	169
32.	Navigation System	171
33.	Occupant Detection System	174
34.	Oil Pressure Warning Light System	175
35.	Parking Brake / Brake Fluid Level Warning Light System	176
36.	Power Window System	177
37.	Push Button Start System	181
38.	Radiator Fan System	185
39.	Rear Accessory Power Supply Socket System	186
40.	Rear Defogger System	187
41.	Rearview Camera System	188
42.	Rearview Mirror System	190
43.	Rear Wiper and Washer System	191
44.	Remote Control Mirror System	193
45.	Remote Engine Start System	194

46. Seat Belt Warning System 201
47. Seat Heater System 202
48. Security System 203
49. Shift Lock Control System 207
50. Speedometer System 208
51. Starter System 209
52. Stop Light System 210
53. Sunroof Control System 211
54. Tire Pressure Monitoring System 212
55. Turn Signal Light and Hazard Light System 213
56. Pedestrian Alert System 216
57. Vehicle Dynamics Control System 218
58. Wiper Deicer System 223
59. Harness Components Location 224
60. Front Wiring Harness 226
61. Bulkhead Wiring Harness (In Engine Compartment) RH 228
62. Bulkhead Wiring Harness (In Engine Compartment) LH 230
63. Bulkhead Wiring Harness (In Compartment) RH 232
64. Bulkhead Wiring Harness (In Compartment) LH 234
65. Engine Wiring Harness and Transmission Cord 237
66. Instrument Panel Wiring Harness RH 239
67. Instrument Panel Wiring Harness LH 241
68. Roof Cord 243
69. Rear Wiring Harness RH 245
70. Rear Wiring Harness LH 247
71. Rear Wiring Harness (HEV) 249
72. Door Cord RH 251
73. Door Cord LH 253
74. Rear Wiring Harness and Rear Gate Cord 255