7-inch MULTI-DISPLAY

FGZ000UF2

SERVICE MANUAL

KENWOOD

Kenwood Corporation

© 2005-7 CREATED IN JAPAN
B53-0302-00 (N) 0

SUBARU GENUINE

Destination	North America

MODEL	PARTS No.
FGZ000UF2	86281XA00A

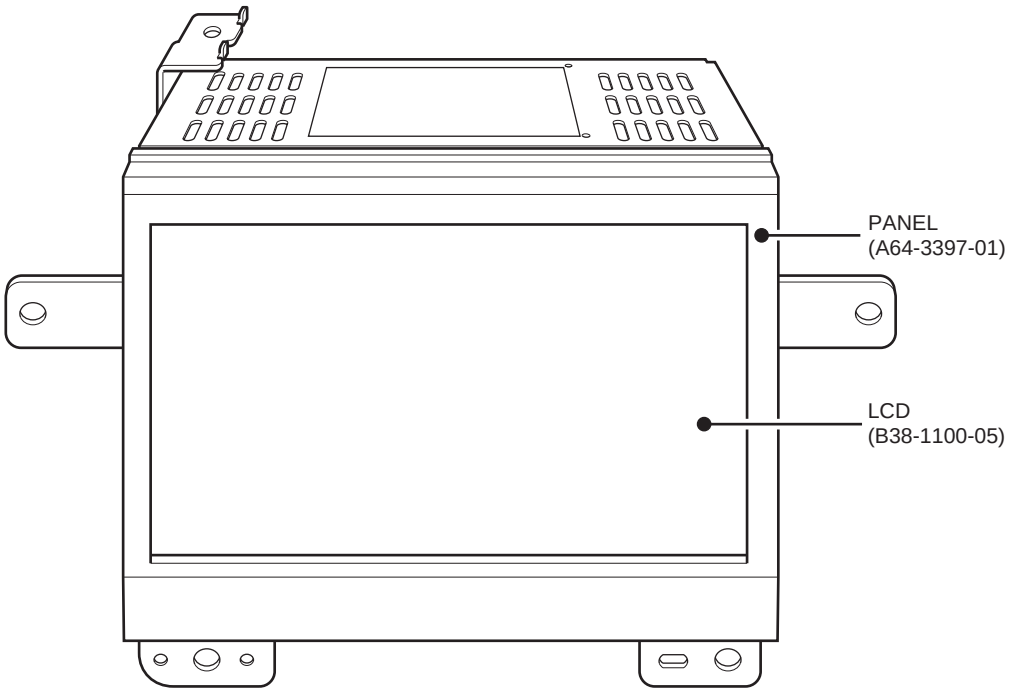

BLOCK DIAGRAM

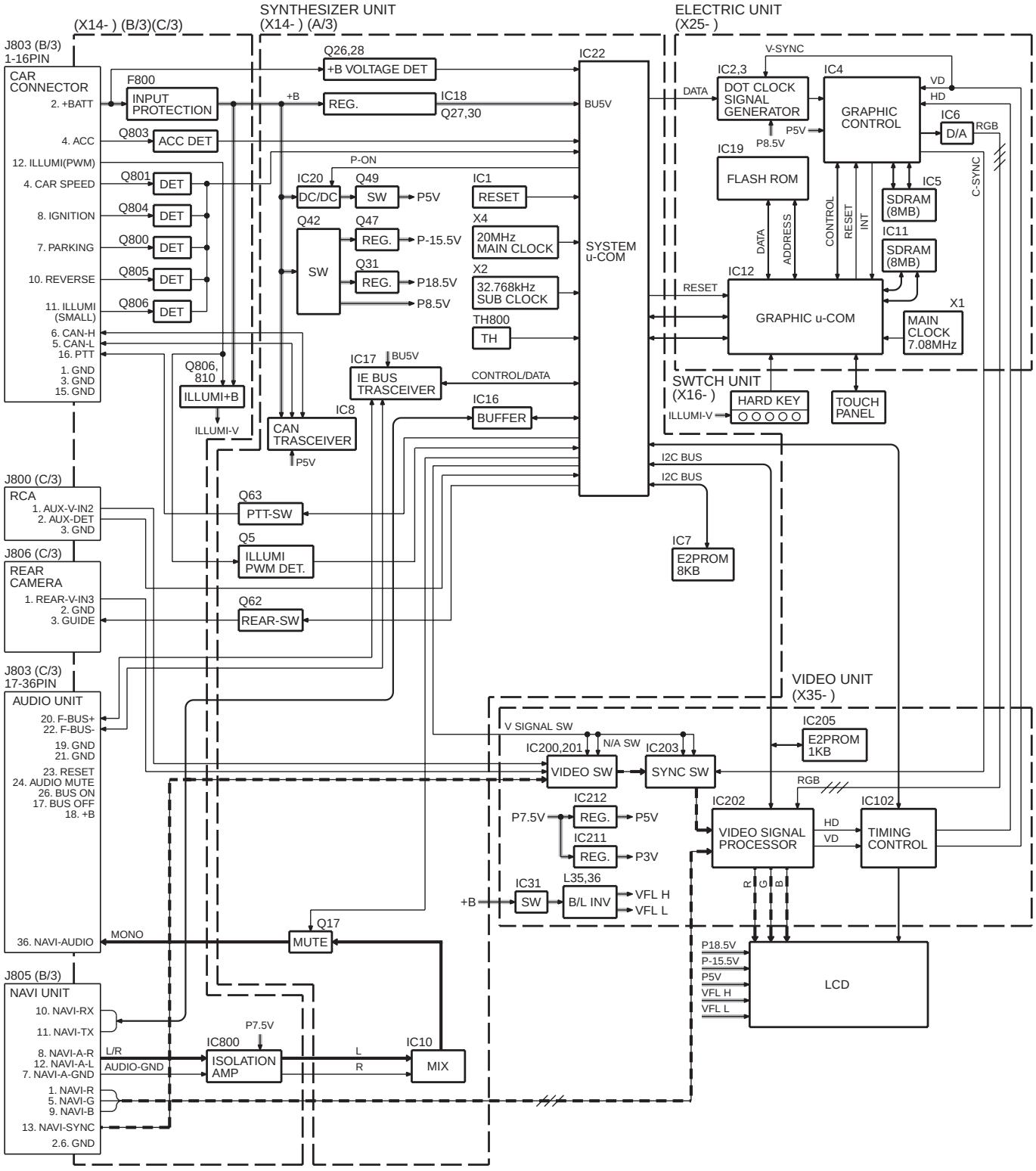

COMPONENTS DESCRIPTION

● SYNTHESIZER UNIT (X14-9490-10)

Ref. No.	Application / Function	Operation / Condition / Compatibility
IC1	Reset IC	Backup 5V voltage monitoring. Resetting system μ-com at B.U OFF.
IC7	E2PROM	Memory for reception TV station and touch panel compensation.
IC8	CAN transceiver	Communication with vehicle unit.
IC9	Reset IC	Detects 5V power supply ON.
IC10	Ope amp	Bias power supply for internal audio circuit. Mixing L/Rch of NAVI sound.
IC16	Buffer	Protects μ-com from communication line of the NAVI unit.
IC17	BUS transceiver	Communication with the audio unit.
IC18	Regulator	5V power supply for system μ-com.
IC20	DC/DC controller	Power supply in general (Other than system μ-com, key Illumination).
IC21	Reset IC	Resetting abnormalities of the system μ-com.
IC22	System μ-com	Controlling CAN communication and graphic μ-com. Setting video source, screen zooming and brightness. Communication with audio & NAVI units. Monitoring internal power supply and abnormalities power supply and temperature.
IC23	Buffer	Audio unit control. Writing to μ-com.
IC800	Isolation amplifier	Removing noise from NAVI unit.
Q1,17,50,74	Audio mute	Mute ON at power supply ON/OFF.
Q2,32,34~37, Q39,41,46,53	DC/DC controller power supply	When ACC is ON, IC20 power supply is turned ON. IC20 power supply is turned OFF, when over current detected with DC/DC output.
Q4,31,57,61	Constant voltage power supply	When Q61 is ON, outputs +18.5V.
Q5	Key Illumination light adjustment detection	ON when illumination PWM is input.
Q6	Temperature detection SW	When ACC ON, goes ON and starts temperature detection.
Q8~11,55,56,58	Video setting detection SW	ON/OFF according to screen mode and adjustment.
Q12,15,18	Audio control SW	When audio communication ON, Q18 is ON, when OFF, Q15 is ON.
Q14,47	Constant voltage power supply	-15.5V constant voltage power supply.
Q24	Power supply momentary power down detection	OFF at backup power supply momentary power down.
Q26,28	Voltage detection	When Q26 is ON, backup power supply voltage detection.
Q27,29,30,64	Constant voltage power supply	Backup 5V power supply regulator.
Q33	Over current detection	When detecting 18.5V over current, controller power supply OFF.
Q38	Over current detection	When detecting 7.5V over current, controller power supply OFF.
Q40,42	DC/DC switching	Switching of primary-side of transformer.
Q43,49	DC/DC switching	5V power supply switching.
Q44	Over current detection	When detecting -15.5V over current, controller power supply OFF.
Q48	Over current detection	When detecting 5V over current, controller power supply OFF.
Q62	Rear camera control SW	ON at adjustment of rear camera and marker.
Q66~69	Watchdog timer	Q67 is OFF at system μ-com run off.

COMPONENTS DESCRIPTION

Ref. No.	Application / Function	Operation / Condition / Compatibility
Q70,71	Low voltage power supply	7.5V power supply SW (ACC : ON).
Q700~702	Audio connection detection	When audio is connected, Q700 is ON.
Q800	Parking detection	ON when vehicle is parking.
Q801	Vehicle speed detection	ON when vehicle speed pulse is input.
Q802	Reset input	System μ-com is reset when Q802 is ON.
Q803	ACC detection	ON when vehicle ACC is ON.
Q804	Ignition detection	ON when vehicle ignition is turned ON.
Q805	Reverse detection	ON when vehicle is reversed.
Q806	Small detection	ON when vehicle small light is turned ON.
Q807~811	Key Illumination light adjustment power supply regulator	In accordance with PWM duty, Illumination VCC (7V) is output.

● ELECTRIC UNIT (X25-9410-11)

Ref. No.	Application / Function	Operation / Condition / Compatibility
IC2	PLL oscillation IC	Clock signal for graphic display.
IC3	Inverter	Dot clock inverter.
IC4	Graphic controller	Graphic display control.
IC5	Graphic controller work RAM	Work area of graphic controller.
IC6	Video signal D/A conversion	Converts the 8-bit signal from graphic controller to RGB signals.
IC7	Inverter	DACK signal inverter.
IC10	OR gate	OR output of 2 write enable signals.
IC11	Graphic μ-com work RAM	Work area of graphic μ-com.
IC12	Graphic μ-com	Graphic display control.
IC19	Display program, display bitmap data	Storage of graphic display data and program data.
IC20	Inverter	Synchronization signal inverter.
IC22	Inverter	Graphic display area inverter.
IC23	AND gate	Reset timing compensation.
IC26	3-terminal regulator	Conversion from 8.5V to 5V.
IC27	Inverter	Synchronization signal inverter.
Q2~5	Touch panel voltage detection	Voltage detection at touch panel ON.

● VIDEO UNIT (X35-4252-71)

Ref. No.	Application / Function	Operation / Condition / Compatibility
IC31	Switching regulator	For backlight 7.5V power supply.
IC101	Ope amp	Oscillation circuit low-pass output.
IC102	Timing controller	LCD driver IC.
IC200,201	Video switch	Input video signal switching.
IC202	Synchronization separation	Separation of input video signals into horizontal and vertical synchronization.

COMPONENTS DESCRIPTION

Ref. No.	Application / Function	Operation / Condition / Compatibility
IC203	Chroma decoder gamma compensation	Conversion of input video signal into signal suitable for LCD input.
IC205	E2PROM	I2C memory backup.
IC207	Ope amp	V-COM buffer.
IC209	Buffer with 3 circuits	Synchronization signal output buffer.
IC211	3V regulator	Constant voltage generation IC.
IC212	5V regulator	Constant voltage generation IC.
IC217	Inverter	For reversing side-black signal.
Q1	ACC ON/OFF SW	For backlight power supply.
Q2	+B SW	For backlight power supply.
Q3,4	ACC ON/OFF SW	For backlight power supply.
Q31,32	SW regulator output buffer	For FET drive.
Q33	DC/DC converter SW	For backlight power supply.
Q35,36	Inverter oscillator SW	For inverter.
Q37~39	Backlight adjustment SW	For PWM light adjustment.
Q40	Over current protection	For over current protection of backlight power supply.
Q41	Over current/voltage protection	For over current/voltage protection of backlight power supply.
Q42,43	Backlight SW	For turning backlight ON.
Q101	Oscillation circuit	For reference oscillation of timing controller.
Q102	LCD control reversal	For LCD up/down reversal control.
Q203,204	V-COM buffer	For V-COM buffer.
Q205,206	Video signal buffer	For viideo signal buffer.
Q209,210	Synchronization signal muting	For muting at adjustment of timing controller.
X200	Synchronization separation reference oscillator	500kHz
X201	Color demodulation	3.58MHz

MICROCOMPUTER'S TERMINAL DESCRIPTION

● SYSTEM μ-com : IC22 (X14 : SYNTHESIZER UNIT)

Pin No.	Pin Name	I/O	Application	Processing Operation Description
1	NAVI-TXD	O	Transmission data output for normal NAVI communication	H, L output
2	NC	-	Not connected	Not used
3	ILL PWM	I	ILLUMI PWM input (Cycle)	PWM input
4	ILL PWM	I	ILLUMI PWM input (Oscillation width)	PWM input
5	E2PSDA	I/O	IIC clock output (E2PROM)	H, L output
6	E2PSCL	O	IIC data input/output (E2PROM)	H, L output
7	SPD	I	Vehicle speed pulse input	H, L input
8	WDP	O	Watchdog pulse output	H, L output
9,10	NC	-	Not connected	Not used
11	TYPE0	I	Destination setting input	H, L-fixed
12	NC	I	Not connected	H, L-fixed
13	CAN EN	O	CAN communication enable	H, L output
14	$\overline{\text{CAN STB}}$	O	CAN communication standby	H, L output
15	BYTE	-	Not used	L-fixed
16	CNVSS	I	5V at ROM writing	H : Microprocessor mode, L : Single chip mode, L : Memory expansion mode
17	XCIN	I	Sub-clock input	H, L input
18	XCOUT	O	Sub-clock output	H, L output
19	$\overline{\text{RESET}}$	I	Reset input	H, L input, L : RESET
20	XOUT	O	Main clock input	H, L output
21	VSS1	-	GND	GND
22	XIN	I	Main clock output	H, L input
23	VCC1	-	Power supply input	VCC5V
24	$\overline{\text{NMI}}$	I	NMI interruption input	H-fixed
25	$\overline{\text{CAN ERR}}$	I	CAN communication condition input	H, L input, L : Error
26~29	NC	-	Not connected	Not used
30	CAN IN	I	CAN reception data input	H, L output
31	CAN OUT	O	CAN reception data output	H, L input
32	NC	-	Not connected	Not used
33	BRIGHT	O	Backlight control output	PWM output
34	$\overline{\text{VMUTE}}$	O	Video mute control output	H, L output, L : MUTE
35	NC	-	Not connected	Not used
36	I2CSCL	O	IIC clock output (E2PROM)	H, L output
37	I2CSDA	I/O	IIC clock output (E2PROM)	H, L input/output
38	TXD1	-	Not used	Not used
39	VCC2	-	Power supply input	VCC5V
40	RXD1	-	Not used	Not used
41	VSS2	-	GND	GND
42	SCLK	-	Not used	Not used
43	BUSY	-	Not used	Not used
44	SYSDATA	O	Data output (For video control processing)	H, L output
45	SHDATA	I	Data input (For video control processing)	H, L input

MICROCOMPUTER'S TERMINAL DESCRIPTION

Pin No.	Pin Name	I/O	Application	Processing Operation Description
46	SHCLK	O	Clock output (For video control processing)	H, L output
47	SYSCS	O	Transmission request output (For video control processing)	H, L output, L : Transmission request
48	SHCS	I	Clock input (For video control processing)	H, L input, L : Transmission request
49	$\overline{\text{STB}}$	O	AUDIO BUS communication standby output	H, L output, L : Standby
50	SI	I	AUDIO BUS communication data reception input	H, L input
51	SO	O	AUDIO BUS communication data reception output	H, L output
52	REAR GUIDE	O	Rear camera guide control output	H, L output
53	NC	-	Not used	Not used.
54	EMP	I	ROM write EPM input	L-fixed
55	NC	-	Not used	Not used
56	$\overline{\text{NAVI MUTE}}$	O	NAVI voice signal output (At startup)	H, L output, L : MUTE
57	VSS3	-	GND	GND
58	$\overline{\text{AUDIO DET}}$	I	Audio voltage detection input	H, L input, H : IE-BUS used
59	VCC3	-	Power supply input	VCC5V
60	$\overline{\text{AUDIO MUTE}}$	O	AUDIO mute signal output	H, L output, L : MUTE
61	$\overline{\text{NAVI INT}}$	O	NAVI voice signal output (At output)	H : Bch (CODEC AUDIO), L : Ach (NAVI AUDIO)
62	P ON1	O	Power supply control output	H, L output H : Power supply ON, L : Power supply OFF
63	P ON2	O	PON7.5V control output	H, L output H : Power supply ON, L : Power supply OFF
64	P ON3	O	PON18.5V control output	H, L output H : Power supply ON, L : Power supply OFF
65	CE	I	ROM writing CE input	H-fixed
66	PLLCE	O	Q2i clock generation IC mode output	H, L output, H : Program counter used PLL mode
67	PLLSDA	O	Q2i clock generation IC data output	H, L output
68	PLLSCK	O	Q2i clock generation IC clock output	H, L output
69	$\overline{\text{SHRESET}}$	O	Graphic μ-com reset output	H, L output, L : RESET
70	$\overline{\text{SHINI}}$	O	Graphic μ-com initial output	H, L output, L : INIT
71	SHRDY	I	Graphic communication enable condition notification input	H, L input, H : Communication preparation complete
72	SHSTBY	I	Graphic μ-com standby transition complete input	H, L input, H : Transition complete
73	SHCON	O	Graphic μ-com standby control output	H, L output, L : Standby
74	VCC4	-	Power supply input	VCC5V
75	SH VMUTE	I	Graphic μ-com video mute request input	H, L output, H : Video mute request
76	VSS4	-	GND input	GND
77	$\overline{\text{TOUCH EN}}$	O	Graphic μ-com touch key analysis permission output	H, L output H : Analysis prohibited, L : Analysis permitted
78	TOUCH	I	Graphic μ-com touch key ON notification input	H, L input, H : Touch key ON, L : Touch key OFF
79	PTT	O	PTT output for telephone	H, L output, H : ACTIVE
80	FAULT	O	FAULT display output	H, L output
81	ON REQ	-	Not used	Not used
82	OFF REQ	-	Not used	Not used
83	BUS SYS ON	-	Not used	Not used
84	BUS SYS OFF	-	Not used	Not used

MICROCOMPUTER'S TERMINAL DESCRIPTION

Pin No.	Pin Name	I/O	Application	Processing Operation Description
85	NAVI ON	O	NAVI voice MUTE	
86	BEEP ON	O	BEEP sound signal	
87	NC	-	Not connected	Not used
88	$\overline{\text{KEYDET}}$	I	Key terminal connection detection	H, L input, L : Detection
89	NC	-	Not used	Not used
90	BL ON	O	Backlight switch output	H, L output, H : Backlight ON
91	VCC5	-	Power supply input	VCC5V
92	SYNCMUTE	O	Video MUTE signal	H, L output, H : MUTE
93	VSS5	-	GND input	GND
94,95	NC	-	Not connected	Not used
96	+BDET	I	+B voltage detection input	
97	TEMPDET	I	High temperature detection	
98	PARKING	I	Parking detection input	H, L input, H : Parking ON, L : Parking OFF
99	REVERSE	I	Reverse detection input	H, L input, H : Reverse OFF, L : Reverse ON
100	IGN	I	Ignition voltage detection input	H, L input
101	$\overline{\text{ILLSMALL}}$	I	ILLUMI ON input	H, L input, L : ILLUMI ON
102	$\overline{\text{ACC DET}}$	I	ACC ON detection	H, L input, H : ACC OFF, L : ACC ON
103	BUDET	I	+B voltage fluctuation detection input	H, L input
104	NC	-	Not connected	Not used
105	+BDET SW	O	+B voltage detection circuit control output	H, L output
106	NC	-	Not connected	Not used
107	AUX DET	I	AUX connection detection	H, L input, H : Connection
108	REAR DET	I	Rear camera connection detection	H, L input, L : Connection
109	NC	-	Not connected	Not used
110,111	KEY-IN1,KEY-IN2	I	Key input	
112~116	NC	-	Not connected	Not used
117,118	$\overline{\text{SCAN1}}$,$\overline{\text{SCAN2}}$	O	Display mode selection switch output	H, L output
119~122	$\overline{\text{HPOSI1}}$~$\overline{\text{HPOSI4}}$	O	Horizontal position adjustment output	H, L output
123	TV/REAR SW	O	AUX/REAR SW	H, L output
124	DVD SW	O	RSE SW	H, L output
125	V/N SW	O	NAVI SW	H, L output
126	GRA SW	O	GRAPHIC SW	H, L output
127~129	NC	-	Not connected	Not used
130	VSS6	-	GND input	GND
131	NC	-	Not connected	Not used
132	VCC6	-	Power supply input	VCC5V
133	RSE DET	I	RSE connection detection	
134,135	NC	-	Not connected	Not used
136	DC DC DET	I	PON5V voltage detection input	H, L input
137	NC	I	Not connected	Not used
138	BL DET2	-	Backlight voltage detection input	Analog input
139	BL DET1	I	Backlight voltage detection input	H, L input
140	AVSS	-	GND input	GND

MICROCOMPUTER'S TERMINAL DESCRIPTION

Pin No.	Pin Name	I/O	Application	Processing Operation Description
141	NC	-	Not connected	Not used
142	VREF	I	Reference voltage input	VCC5V
143	AVCC	-	Power supply input	VCC5V
144	NAVI-RXD	I	Normal NAVI communication reception data input	H, L input

● GRAPHIC μ-com : IC12 (X25 : ELECTRIC UNIT)

Pin No.	Pin Name	I/O	Application	Processing Operation Description
1~5	NC	-	Not connected	L-output
6	VSS	I	Ground input	
7	A0	-	Not connected	L-output
8~11	A1~A4	O	Address bus output	H, L-output
12	VCC	-	Power supply input	
13	A5	O	Address bus output	H, L-output
14	VSS	-	Ground input	
15~25	A6~A16	O	Address bus output	H, L-output
26	VCC	-	Power supply input	
27	A17	O	Address bus output	H, L-output
28	VSS	-	Ground input	
29,30	NC	-	Not connected	L-output
31	$\overline{RAS}$	O	DRAM row address strobe output	L : Row address strobe
32	$\overline{CASL}$	O	DRAM low-side column address strobe output	L : Column address strobe
33	NC	-	Not connected	L-output
34	$\overline{CASH}$	O	DRAM upper-side column address strobe input	L : Column address strobe
35	VSS	-	Ground input	
36	RDWR	O	DRAM write strobe output	H : Read, L : Write
37~39	A18~A20	O	Address bus output	H, L-output
40	VCC	-	Power supply input	
41	A21	-	Not connected	Not used since upper address is not used. L-output
42	VSS	-	Ground input	
43	$\overline{RD}$	O	External device read strobe output	L : Read strobe
44	NC	-	Not used	
45	SH VMUTE	-	Not connected	L-output
46	NC	-	Not connected	L-output
47	$\overline{WRH}$	O	External device upper-side write output	L : Write
48	$\overline{WRL}$	O	External device lower-side write output	L : Write
49	$\overline{CS1}$	O	Chip select output (Q2i internal register)	L : Chip select
50	$\overline{CS0}$	O	Chip select output (Flash ROM)	L : Chip select
51~53	NC	-	Not connected	L-output
54	$\overline{CS2}$	O	Chip select outpout (Q2i UGM)	L : Chip select
55	VSS	-	Ground input	
56	$\overline{ROM\ RESET}$	-	Not connected	L-output

MICROCOMPUTER'S TERMINAL DESCRIPTION

Pin No.	Pin Name	I/O	Application	Processing Operation Description
57	ROM RY/$\overline{BY}$	-	Not connected	L-output
58	NC	-	Not connected	L-output
59	DACK	O	Q2i DMA transfer strobe output	H : Not used as transfer strobe is not used. L-output
60	NC	-	Not connected	L-output
61	VSS	-	Ground input	
62	$\overline{DREQ}$	I	Q2i DMA transfer request input	L : Not used as transfer request is not sued. L-input
63	VCC	-	Power supply input	
64~68	NC	-	Not connected	L-output
69	$\overline{SYSCS}$	I	Graphic μ-com transmission request input (System μ-com transmission request output)	L : Transmission request
70	$\overline{IRL}$	I	Q2i interruption request input	L : Interruption request
71	VSS	-	Ground input	
72	$\overline{SHCON}$	I	Graphic μ-com standby control input	L : Standby
73~76	D15~D12	I/O	Data bus input/output	H, L-input/output
77	VCC	-	Power supply input	
78	D11	I/O	Data bus input/output	H, L-input/output
79	VSS	-	Ground input	
80~84	D10~D6	I/O	Data bus input/output	H, L-input/output
85	VCC	-	Power supply input	
86	D5	I/O	Data bus input/output	H, L-input/output
87	VSS	-	Ground input	
88~92	D4~D0	I/O	Data bus input/output	H, L-input/output
93	VSS	-	Ground input	
94	XTAL	I	Crystal oscillator input	
95	MD3	I	Operation mode setting input	H-input
96	EXTAL	I	Crystal oscillator input	
97	MD2	I	Operation mode setting input	L-input
98	NMI	I	Non-maskable interruption input	L-input
99	VCC	-	Power supply input	
100	NC	-	Pull-up	L-input
101	$\overline{WAIT}$	I	Q2i wait cycle insertion input	L : Wait cycle insertion
102,103	MD1, MD0	I	Operation mode setting input	H or L-input (Normal : L, Write : H)
104	PLLVCC	I	Power supply input for built-in PLL	
105	PLLCAP	I	Power supply input for built-in PLL	
106	PLLVSS	I	Ground input for built-in PLL	
107	NC	-	Not connected	L-output
108	$\overline{SHRST}$	I	Reset input	L : Reset
109	NC	-	Not connected	Not used, L-output
110,111	NC	-	Not connected	L-output
112	VCC	-	Power supply input	
113	Y-	O	Switching output for touch panel input	H, L-output

MICROCOMPUTER'S TERMINAL DESCRIPTION

Pin No.	Pin Name	I/O	Application	Processing Operation Description
114	X-	O	Switching output for touch panel input	H, L-output
115	Y+	O	Switching output for touch panel input	H, L-output
116	X+	O	Switching output for touch panel input	H, L-output
117	VSS	I	Ground input	
118	KEYDATA1	I	Touch panel data input (Y)	Analog input
119	KEYDATA2	I	Touch panel data input (X)	Analog input
120	KEY6	-	Not used.	L-fixed
121~123	KEY5~KEY3	I	Key switch input	H, L-input
124	AVSS	I	Analog ground input	
125,126	KEY2, KEY1	I	Key switch input	H, L-input
127	VREF	I	Reference voltage input	
128	AVCC	-	Analog power supply input	
129	VSS	-	Ground input	
130	SYSDATA	I	Graphic μ-com data input (system μ-com data output)	H, L-input
131	SHDATA	O	Graphic μ-com data output (system μ-com data input)	H, L-input
132	SYSCLK	I	Graphic μ-com clock input (system μ-com clock output)	H, L-input
133	ROM RXD	I	Flash ROM write data input	Normally L-input Data input when writing to flash ROM
134	ROM TXD	O	Flash ROM write data output	Normally L-output Data output when writing to flash ROM
135	VCC	-	Power supply input	
136	SHSTBY	O	Graphic μ-com standby transition complete output	H : Transition complete
137	TOUCH	O	Graphic μ-com touch key ON notice output PTT-key ON notice output	H : Touch key ON, L : Touch key OFF
138	$\overline{\text{SHCS}}$	O	System μ-com transmission request output (Graphic μ-com transmission request input)	L : Transmission request
139	NC	-	Not connected	L-output
140	SHRDY	O	Graphic μ-com communication enable condition notice output	H : Communication preparation complete
141	VSS	-	Ground input	
142	NC	-	Not connected	L-output
143	$\overline{\text{TOUCH EN}}$	I	Graphic μ-com touch key analysis permission input	H : Analysis prohibited L : Not used as analysis permission is not used
144	$\overline{\text{SHINI}}$	I	Graphic μ-com initial input	L : Not used as RESET is not used

MICROCOMPUTER'S TERMINAL DESCRIPTION

● GRAPHIC CONTROLLER : IC4 (X25 : ELECTRIC UNIT)

Pin No.	Pin Name	I/O	Processing Operation Description
1	$\overline{\text{DREQ}}$	O	DMA request
2, 3	D0, D1	I/O	CPU data
4	CVCC1	-	Power supply
5	D2	I/O	CPU data
6	CGND1	-	Ground
7~11	D3~D7	I/O	CPU data
12	CGND2	-	Ground
13~15	D8~D10	I/O	CPU data
16	CVCC2	-	Power supply
17, 18	D11, D12	I/O	CPU data
19	CGND3	-	Ground
20~22	D12~D15	I/O	CPU data
23	PGND	-	Ground
24	CAP0	-	External volume terminal for communication circuit
25	PVCC	-	Power supply
26	$\overline{\text{CS0}}$	I/O	Chip selection 0 (UGM)
27	$\overline{\text{CS1}}$	I/O	Chip selection 1 (Internal register)
28	$\overline{\text{RD}}$	I	Read strobe
29	$\overline{\text{WE0}}$	I	Write pulse 0 (lower side)
30	$\overline{\text{WE1}}$	I	Write pulse 1 (upper side)
31	$\overline{\text{DACK}}$	I	DMA acknowledge
32	MODE0	I	Operation mode terminal 0
33	MODE1	I	Operation mode terminal 1
34	MODE2	I	Operation mode terminal 2
35	TEST	I	Test terminal
36	$\overline{\text{RESET}}$	I	Reset
37	CLK0	I	Q2i operation clock
38	GND1	-	Ground
39, 40	A1, A2	I	CPU address
41	VCC1	-	Power supply
42~49	A3~A10	I	CPU address
50	GND2	-	Ground
51~60	A11~A20	I	CPU address
61, 62	A21, A22	-	Not connected
63	GND3	-	Ground
64~68	MD0~MD4	I/O	Memory data
69	GND4	-	Ground
70	MD5	I/O	Memory data
71	VCC2	-	Power supply
72~78	MD6~MD12	I/O	Memory data
79	GND5	-	Ground
80, 81	MD13, MD14	I/O	Memory data

MICROCOMPUTER'S TERMINAL DESCRIPTION

Pin No.	Pin Name	I/O	Processing Operation Description
82	VCC3	-	Power supply
83	MD15	I/O	Memory data
84	$\overline{\text{MWE}}$	O	Memory write pulse
85, 86	$\overline{\text{MRAS0}}$, $\overline{\text{MRAS1}}$	O	Lower selection signal
87	MLCAS	O	Lower column selection signal
88	MUCAS	O	Lower column selection signal
89	GND6	-	Ground
90	$\overline{\text{MOE}}$	O	Memory read pulse
91~93	MA0~MA2	O	Memory address
94	VCC4	-	Power supply
95~98	MA3~MA6	O	Memory address
99	GND7	-	Ground
100~104	MA7~MA11	O	Memory address
105	GND8	-	Ground
106	CLK1	I	Display dot clock
107	VCC5	-	Power supply
108	FCLK	O	1/2 display dot clock
109	$\overline{\text{ODDF}}$	I/O	Pulse indicating odd number field
110	GND9	-	Ground
111	DCLK	O	Display clock
112	CDE	O	Color detection
113	VCC6	-	Power supply
114	DISP	O	Display period pulse
115	$\overline{\text{CSYNC}}$	O	Composite synchronization signal
116	GND10	-	Ground
117	$\overline{\text{HSYNC}}$	O	Horizontal synchronization
118	$\overline{\text{VSYNC}}$	O	Vertical synchronization
119~121	DD0~DD2	O	Display data
122	GND11	-	Ground
123~125	DD3~DD5	O	Display data
126	VCC7	-	Power supply
127, 128	DD6, DD7	O	Display data
129	GND12	-	Ground
130~134	DD8~DD12	O	Display data
135	GND13	-	Ground
136	DD13	O	Display data
137	VCC8	-	Power supply
138~141	DD14~DD17	O	Display data
142	CGND4	-	Ground
143	$\overline{\text{IRL}}$	O	Interruption request
144	$\overline{\text{WAIT}}$	O	CPU wait

TEST MODE

Outline

● How to Enter the Test Mode

Turn the power on while pressing on the 2 operation keys of “MENU” and “AUDIO” on FRC000UF2, and the touch panel on FGZ000UF2.
After ACC ON, keep on pressing on the 2 keys and the touch panel until the image (Opening Screen) appears on the screen.
After the display of opening screen, the screen will display test items.

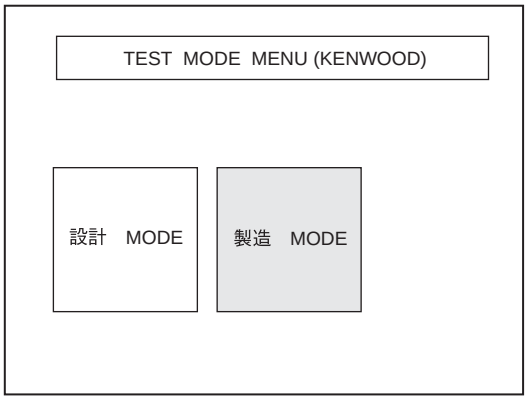

Test mode screen

Manufacturing Mode (Screen position adjustment)

● Outline of the Specifications

When the Manufacturing Mode is entered, the Item Selection Screen is displayed and, when a button for a certain item is pressed, the item will be selected. When providing the service, the start position adjustment in the screen display only will be used.

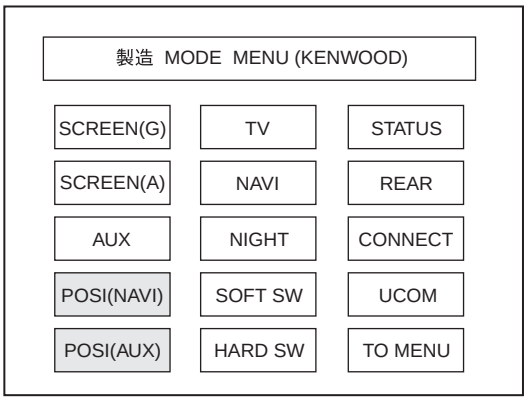

Manufacturing mode selection screen

● How to Release the Test Mode

The Test Mode is released when the ACC is turned off.
When releasing the test mode, the following are the default condition:

- Screen adjustment
- TV NAME
- Maintenance information

● List of Specifications

No.	Item	Screen	Operation Specification	Remarks
1	SCREEN (G) ① Brightness adjustment ② Contrast adjustment	NAVI	Adjustment (Initial position: center) Minimum (0) ↔ Center (10) ↔ Max. (20)	① The screen is switched depending on destination. ② Color bar input when NAVI is used.
2	SCREEN (A) ① Brightness adjustment ② Contrast adjustment ③ Tint ④ Color depth	AUX	Adjustment (Initial position: center) Minimum (0) ↔ Center (10) ↔ Max. (20)	① White 100% is input by VIDEO input.
3	AUX ① Image stroke (1)	AUX No OSD		① White 50% is input by AUX input.

TEST MODE

No.	Item	Screen	Operation Specification	Remarks
4	POSITION (NAVI) ① Screen position adjustment	NAVI	Adjustment (Initial C) Right/Left keys are made with graphics, which shifts the screen to right and left. Adjustment range: 0~F.	① Adjustment screen in input through NAVI input. 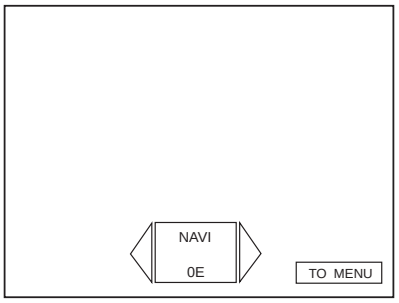
5	POSITION (AUX) ① Screen position adjustment	AUX	Adjustment (Initial D) Right/Left keys are made with graphics, which shifts the screen to right and left. Adjustment range: 0~F.	① Adjustment screen is input through VIDEO input.
6	TV ① Brightness adjustment ② Contrast adjustment ③ Tint ④ Color depth ⑤ Screen size ⑥ Channel ⑦ Sound	TV	Adjustment (Initial: Center) -1 ↔ Center (14) ↔ +1 -1 ↔ Center (14) ↔ +1 -1 ↔ Center (10) ↔ +1 -1 ↔ Center (10) ↔ +1 Switching goes in the following order: FULL→JUST→ZOOM→NORMAL reception TV sound is switched ON/OFF.	① In order to switch sounds, AUDIO unit is required.
7	NAVI ① White balance ② Flicker ③ Maximum brightness ④ Brightness line, reduction line ⑤ Point missing, line missing ⑥ Screen beat ⑦ Gradation characteristics ⑧ Color reproduction ⑨ Confirmation on visionary angle ⑩ Screen roughness ⑪ Image cross-talk (2)	NAVI (RGB) No OSD	NAVI screen, with maximum brightness set. Contrast → Default Tint → Default Color depth → Default	① White 100% input ② White 50% input ③ White 100% input ④ Confirmation on the RED, GREEN, and BLUE luster screens. ⑤ Same as above. ⑥ Color bar input ⑦ Confirmation on crush of white and black. ⑧ Color bar input ⑨ Color bar input ⑩ White 50% input

TEST MODE

No.	Item	Screen	Operation Specification	Remarks
8	NIGHT ① Night screen brightness	NAVI (RGB) No OSD	NAVI screen, with minimum brightness set. Contrast → Default Tint → Default Color depth → Default	① White 100% input, with NAVI (RGB) input.
9	SOFT SW ① Touch panel operation	Graphic	Numeric displays on four corners of the screen. When a number is pressed, the pressed number is displayed on the screen in a large size.	
10	HARD SW ① Hard switch	Graphic (Hard switch confirmation screen)	① By the switch information corresponding to the external switch, the tint is switched each time the switch is pressed. ② The key illumination is forced to turn on.	
11	STATUS ① Heater operation ② Confirmation on excess current ③ μ-com version ④ Destination	Graphic	① Displays internal temperature of LCD ② Displays voltage ③ Displays version ④ Displays destination	
12	REAR ① Rear image confirmation ② Guide line adjustment	Rear camera image	The “marker adjustment signal” is connected with the rear camera each time the screen is pressed. Using this the guideline position is adjusted.	
13	CONNECT ① Confirmation on the vehicle unit ② Confirmation on the connection unit ③ Confirmation on the vehicle signal ④ Confirmation on vehicle CAN	Graphic	● Vehicle unit ① Integrated ECU ② Meter ③ Air-conditioner ● Vehicle unit ① Audio (F-BUS) ② NAVI ③ Rear camera ④ TV tuner ⑤ AUX ● Vehicle signal ① Illumination ② Illumination PWM ③ IGN ④ Parking ⑤ Vehicle speed ⑥ Reverse	● Vehicle Unit (Condition) By monitoring the communication condition, “normal” or “abnormal” is displayed. Alongside the vehicle unit items, the condi tions of the CAB BUS line are displayed. When a line is cut (one line out of two communication lines), “abnormal” is displayed. In other cases, “normal” is displayed. * When two lines re cut, this cannot be detected and “normal” is displayed. * On the CAN format, the communication is possible with only one communication line. This may cause the unit to display “normal”. ● Vehicle unit (Connection) The connection condition is monitored and “connected” and “not connected” are displayed. ● Vehicle signal The terminal conditions are displayed.

TEST MODE

No.	Item	Screen	Operation Specification	Remarks
14	μ-COM ① Connections between μ-com	Graphic	System μ-com, CAN, graphic μ-com and E2PROM connection conditions are to be confirmed.	

DESIGN MODE (VIDEO ADJUSTMENT)

● Outline of the specifications

When this mode is set, the item selection screen is displayed.
Items for which the keys are depressed will be selected.
Note: Use only video adjustment (VIDEO ADJ). Other modes are not used for servicing.

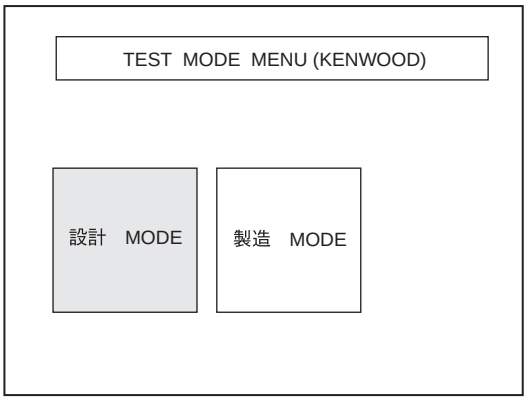

Test mode screen

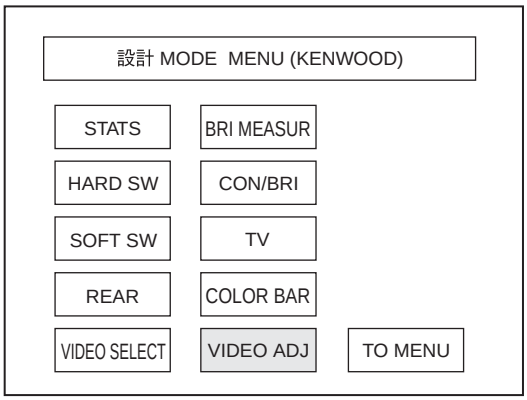

Design mode selection screen

ADJUSTMENT

● VIDEO UNIT (X35-4252-71)

- Start a set in test mode at the time of video board adjustment.
- How to enter to test mode : Pushing operation of 2 keys right (clock)-and-left (image adj.) both ends side and a touch panel. And supply to power is ON.
- After starting : perform substrate adjustment for a video board by a design mode → VIDEO ADJ key with reference to the following item.
- Adjust a picture position by After starting : (AUX) Manufacture mode → POSI (NAVI)
- VIDEO ADJ mode : it is the rectangle color frog of middle at the time of adjustment item selection. It is considered as an adjustment end by choosing a rectangle again after adjustment.

No.	Adjustment item	The adjustment method	Adjustment part	Adjustment value	Conditions	Test point
1	Inverter power regulation	It is considered as Bright : DUTY 100% after VIDEO ADJ - key selection. The voltage of TP577 at this time is adjusted to 7.5±0.1V.	VR30	7.5±0.1V	-	TP577
2	Timing controller free-run frequency	Consider it as microcomputer : SYNC (9 pin : TP138 of IC102) MUTE → H after Adj key selection. VR101 (H-FREE) is turned and the frequency of the NDSH output at this time is adjusted to 15.734±0.01kHz.	VR101	15.734±0.01kHz	Input selector : AUX input non-signal	TP138
3	Chrome IC adjustment	It is made the chroma IC adjustment mode of a static test mode.	-	-	Input selector : AUX or RGB	-
3-A	Chrome VCO adjustment	1 of IC202, 4, and 5 pin are dropped on GND, and a touch panel adjusts TP320 in f shop counter. Carry out the monitor of TP138 of IC102, and adjust VR101 in f shop counter.	CH16	15.734±0.01kHz	An input non-signal	TP320
3-B	Black limiter	Carry out the monitor of the waveform of TP527 with an oscilloscope. Adjst the amplitude value so that the waveform between the pedestal to the negative pedestal is 3.5V±0.1V.	CH5	3.5V±0.1V	Incoming signal : 10 STEP (NTSC) /RGB	TP527
3-C	White limiter	Carry out the monitor of the waveform of TP527 with an oscilloscope. Adjst the amplitude value so that the waveform between the 8 step signal to the negative 8 step signal is 3.5V±0.1V.	CH10	3.5V±0.1V	Incoming signal : 10 STEP (NTSC) /RGB	TP527

ADJUSTMENT

No.	Adjustment item	The adjustment method	Adjustment part	Adjustment value	Conditions	Test point
3-D	Bright adjustment	Carry out the monitor of the waveform of TP527 with an oscilloscope. Adjst the amplitude value so that the waveform between the 2 step signal to the negative 2 step signal is 2.5V±0.1V.	CH6	2.5V±0.1V	Incoming signal : 10 STEP (NTSC) /RGB	TP527
3-E	Contrast	Carry out the monitor of the waveform of TP527 with an oscilloscope. Adjst the amplitude value so that the waveform between the 9 step signal to the negative 9 step signal is 3.0V±0.1V.	CH13	3.0V±0.1V	Incoming signal : 10 STEP (NTSC) /RGB	TP527
3-F	Gamma 1	Carry out the monitor of the waveform of TP527 with an oscilloscope. Adjst the amplitude value so that the waveform between the pedestal to the 3 step signal is 1.2V±0.1V.	CH11	1.2V±0.1V	Incoming signal : 10 STEP (NTSC) /RGB	TP527
3-G	Gamma 2	Carry out the monitor of the waveform of TP527 with an oscilloscope. Adjst the amplitude value so that the waveform between the pedestal to the 10 step signal is 2.9V±0.1V.	CH12	2.9V±0.1V	Incoming signal : 10 STEP (NTSC) /RGB	TP527
3-H	Y gain	Carry out the monitor of the waveform of TP527 with an oscilloscope. Adjst the amplitude value so that the waveform between the pedestal to the 9 step signal is 2.3V±0.1V.	CH2	2.3V±0.1V	Incoming signal : 10 STEP (NTSC) /AUX	TP527
3-I	R sub bright	Carry out the monitor of the waveform of TP528 with an oscilloscope. Adjst the amplitude value so that the waveform between the 2 step signal to the negative 2 step signal is 2.1V±0.1V.	CH8	2.1V±0.1V	Incoming signal : 10 STEP (NTSC) /RGB	TP528
3-J	B sub bright	Carry out the monitor of the waveform of TP526 with an oscilloscope. Adjst the amplitude value so that the waveform between the 2 step signal to the negative 2 step signal is 2.1V±0.1V.	CH9	2.1V±0.1V	Incoming signal : 10 STEP (NTSC) /RGB	TP526

ADJUSTMENT

No.	Adjustment item	The adjustment method	Adjustment part	Adjustment value	Conditions	Test point
3-K	R sub contrast	Carry out the monitor of the waveform of TP528 with an oscilloscope. Adjst the amplitude value so that the waveform between the 10 step signal to the negative 10 step signal is 2.2V±0.1V.	CH14	2.2V±0.1V	Incoming signal : 10 STEP (NTSC) /RGB	TP528
3-L	B sub contrast	Carry out the monitor of the waveform of TP526 with an oscilloscope. Adjst the amplitude value so that the waveform between the 10 step signal to the negative 10 step signal is 2.2V±0.1V.	CH15	2.2V±0.1V	Incoming signal : 10 STEP (NTSC) /RGB	TP526
3-M	VCOM	Carry out the monitor of the waveform of TP517 with an oscilloscope. The amplitude of the adjst the wave of VCOM is 5.8V±0.1V	CH1	5.8V±0.1V	Incoming signal : 10 STEP (NTSC) /RGB	TP517
4	Screen display starting position adjustment	A menu mode -- returning -- POSI of manufacture MODE (NAVI) MENU -- or (AUX) it chooses. Screen position adjustment of the position adjustment is carried out by a touch panel.	Panel top icon	It adjusts so that the position of the picture in a screen may become in the center.	Mono range	Screen
5	Flicker	It adjusts so that the flicker level will be minimum on screen.	VR102	Flicker minimum	Gray drawing	Screen
6	Touch-panel	After usually starting a set in the mode and pressing an information key, a SET icon and a touch compensation icon are chosen. The target which appeared in the screen is pushed in order of the lower left and the upper right.	Panel top icon	-	-	Screen

PC BOARD (COMPONENT SIDE VIEW)

ELECTRIC UNIT X25-9410-11 (J74-1663-02)

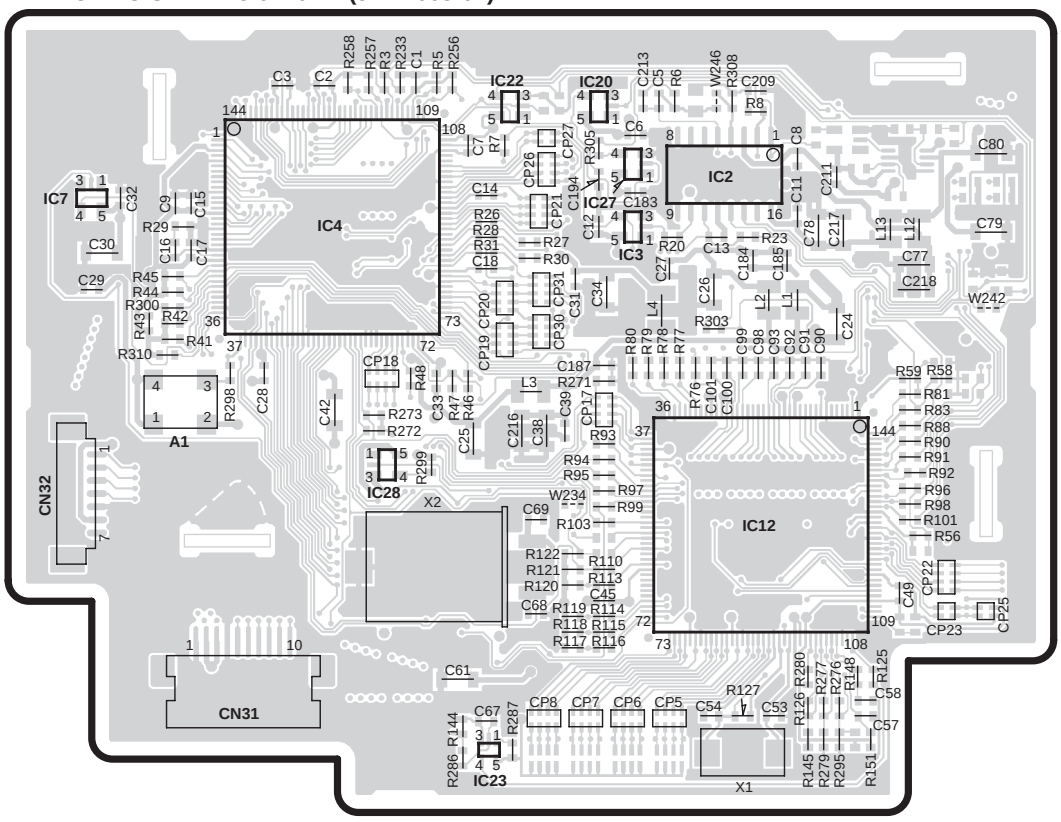

X25-9410-11

Ref. No.	Address
IC2	2C
IC3	2C
IC4	2B
IC7	2A
IC12	3C
IC20	2C
IC22	2B
IC23	4B
IC27	2C

(FOIL SIDE VIEW)

ELECTRIC UNIT X25-9410-11 (J74-1663-02)

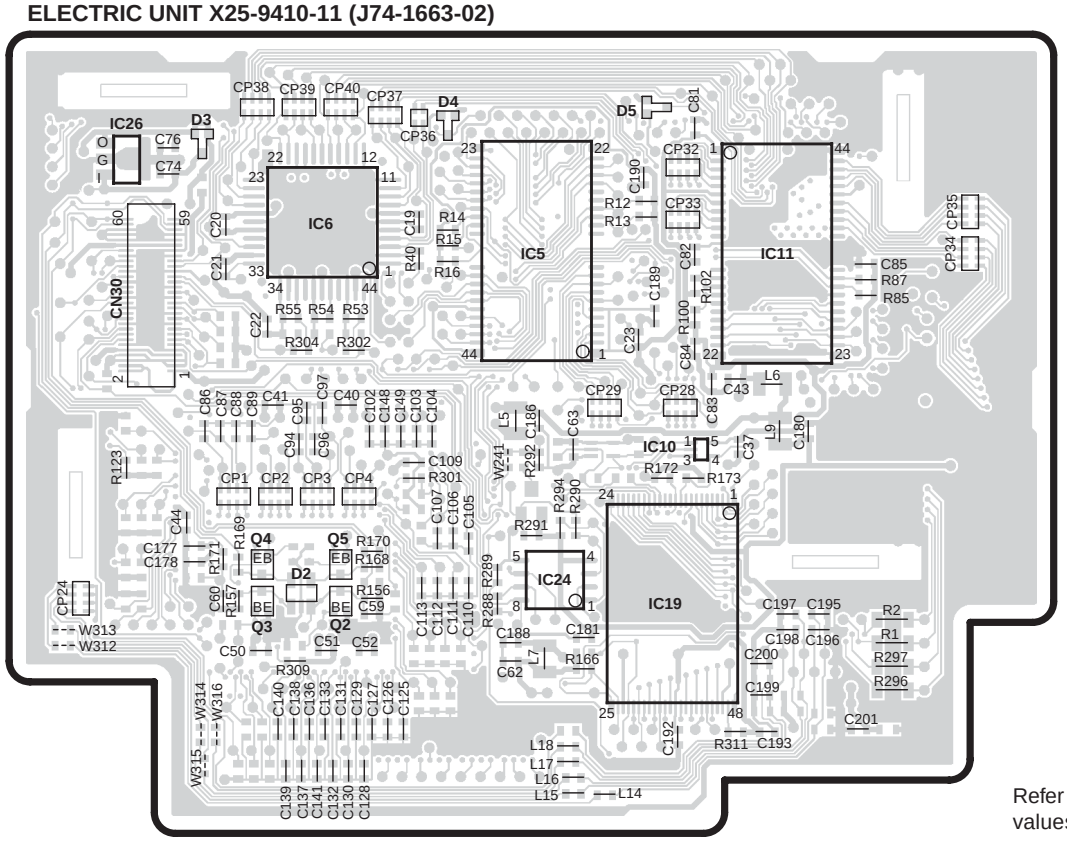

X25-9410-11

Ref. No.	Address
IC5	5B
IC6	5B
IC10	6C
IC11	5C
IC19	6C
IC26	5A
Q2	6B
Q3	6A
Q4	6A
Q5	6B

Refer to the schematic diagram for the values of resistors and capacitors.

FGZ000UF2

PC BOARD (COMPONENT SIDE VIEW)

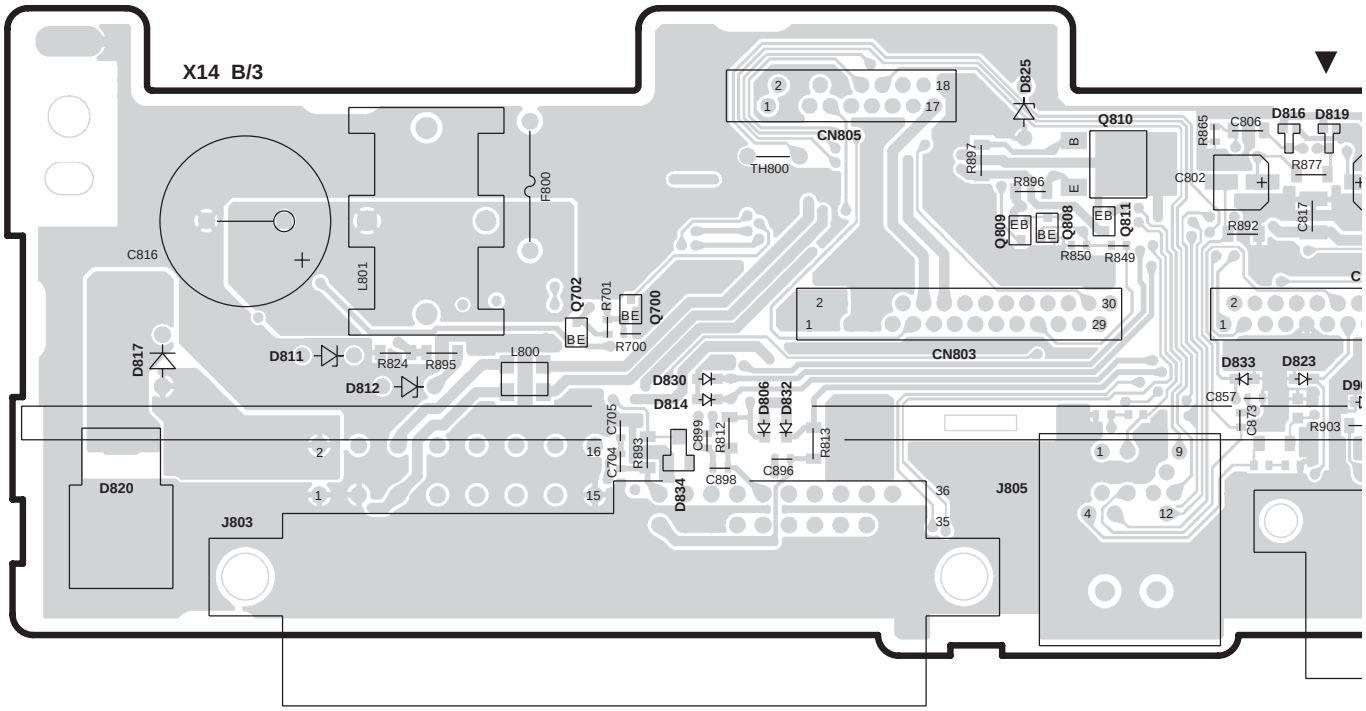

SYNTHESIZER UNIT X14-9490-10 A/3 (J74-1631-02)

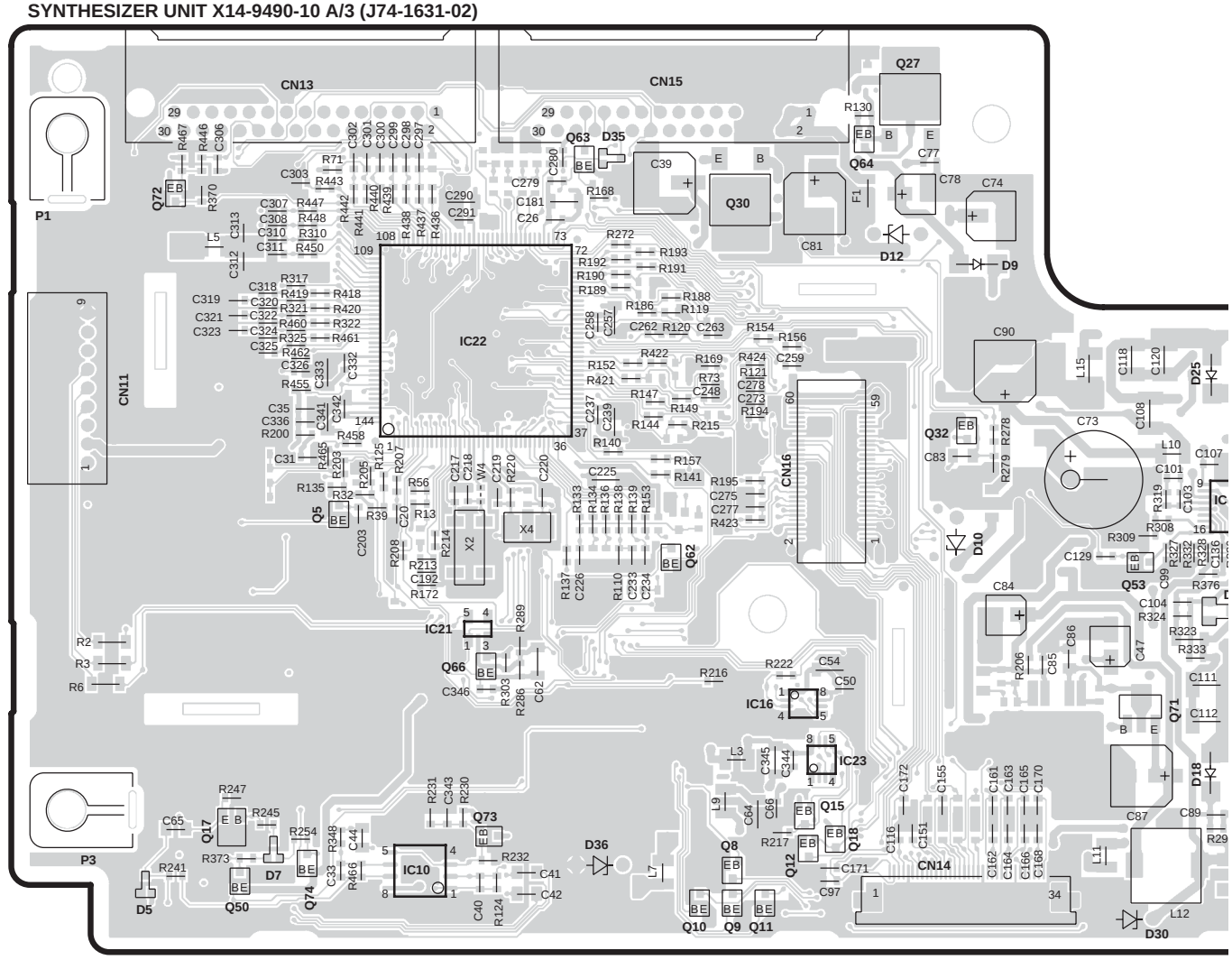

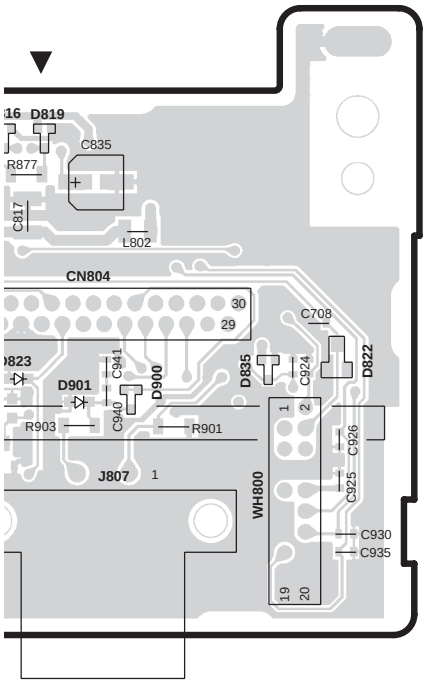

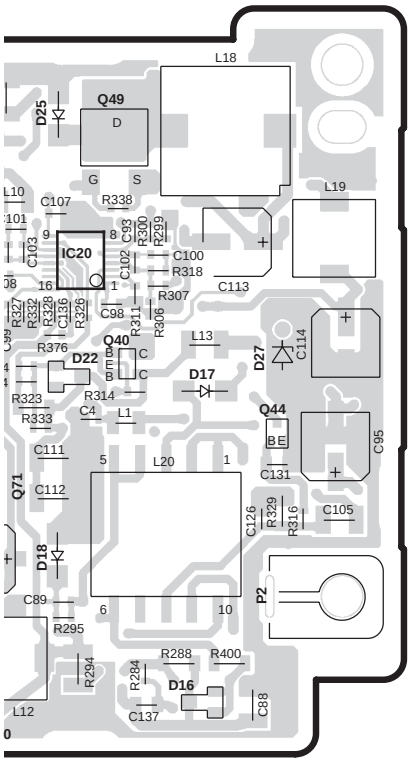

X14 C/3

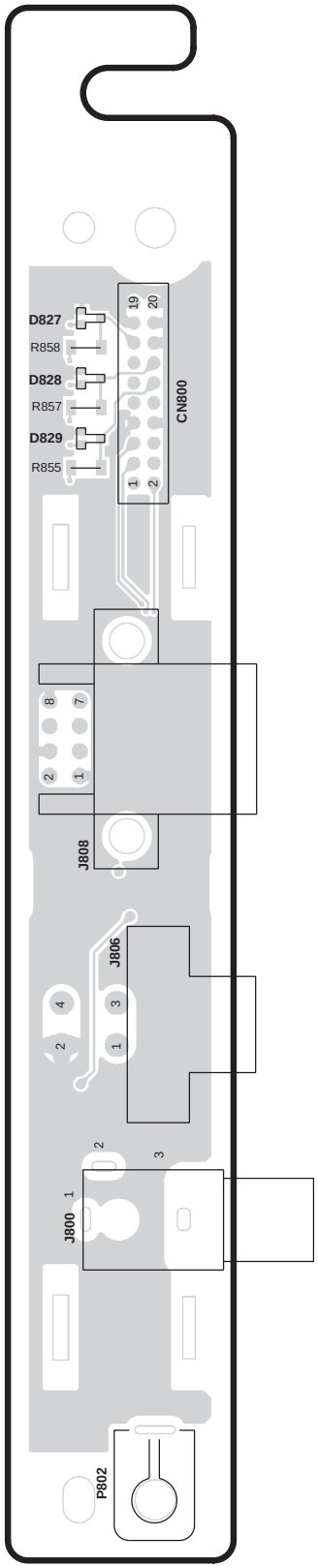

X14-9490-10

Ref. No.	Address
IC10	7G
IC16	6I
IC20	5K
IC21	6H
IC22	5H
IC23	6I
Q5	6G
Q8	7I
Q9	7I
Q10	7H
Q11	7I
Q12	7I
Q15	7I
Q17	7G
Q18	7I
Q27	4I
Q30	4I
Q32	5I
Q40	6K
Q44	6K
Q49	5K
Q50	7G
Q53	6J
Q62	6H
Q64	4I
Q66	6H
Q71	6J
Q72	4F
Q73	7H
Q74	7G
Q700	2H
Q702	2H
Q808	2I
Q809	2I
Q810	2J
Q811	2J

Refer to the schematic diagram for the values of resistors and capacitors.

FGZ000UF2

PC BOARD (FOIL SIDE VIEW)

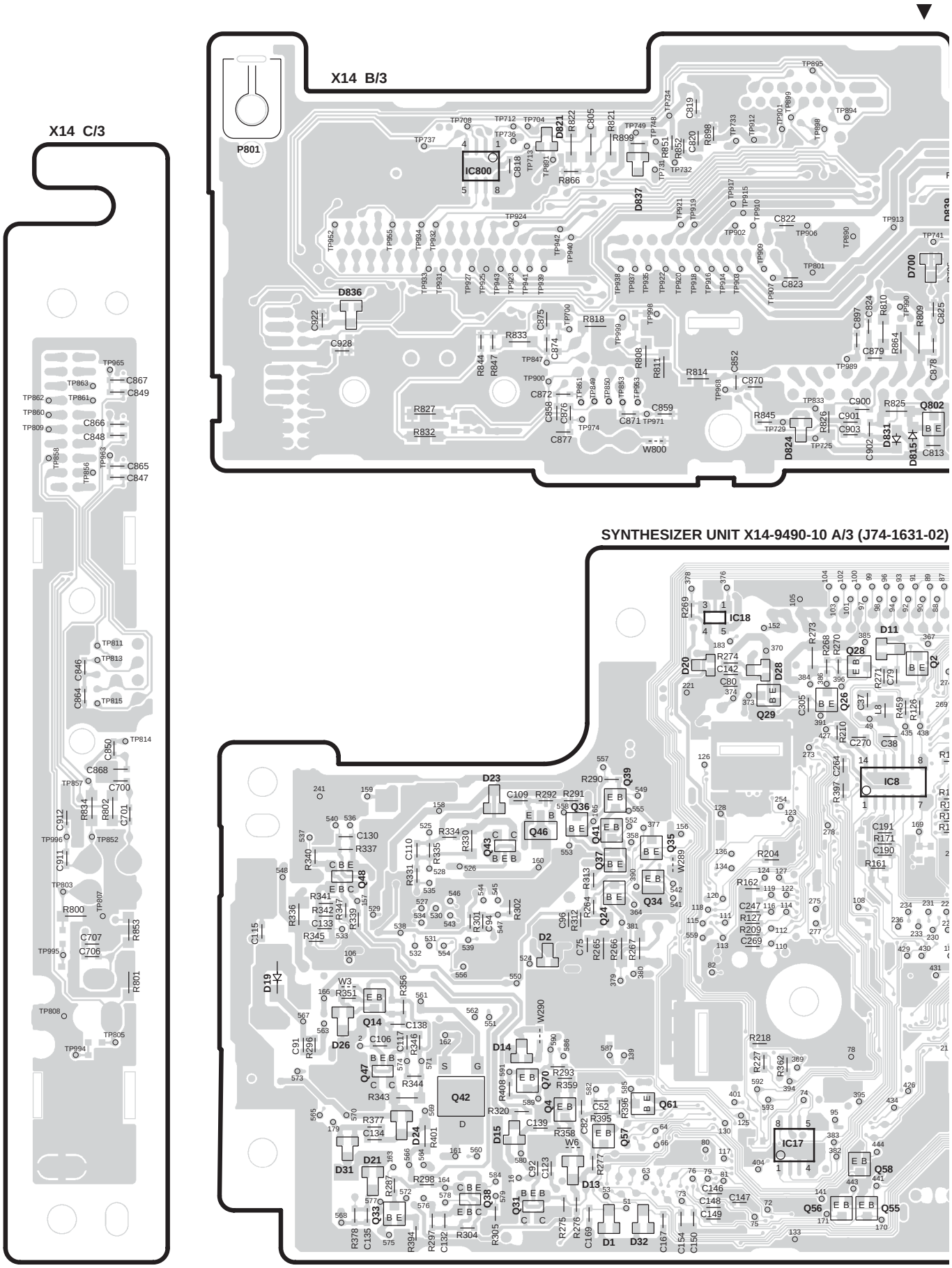

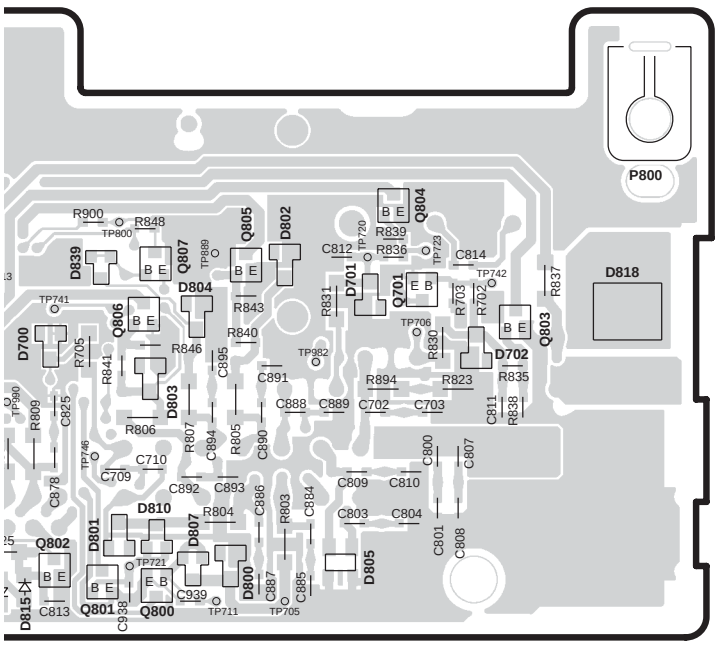

631-02)

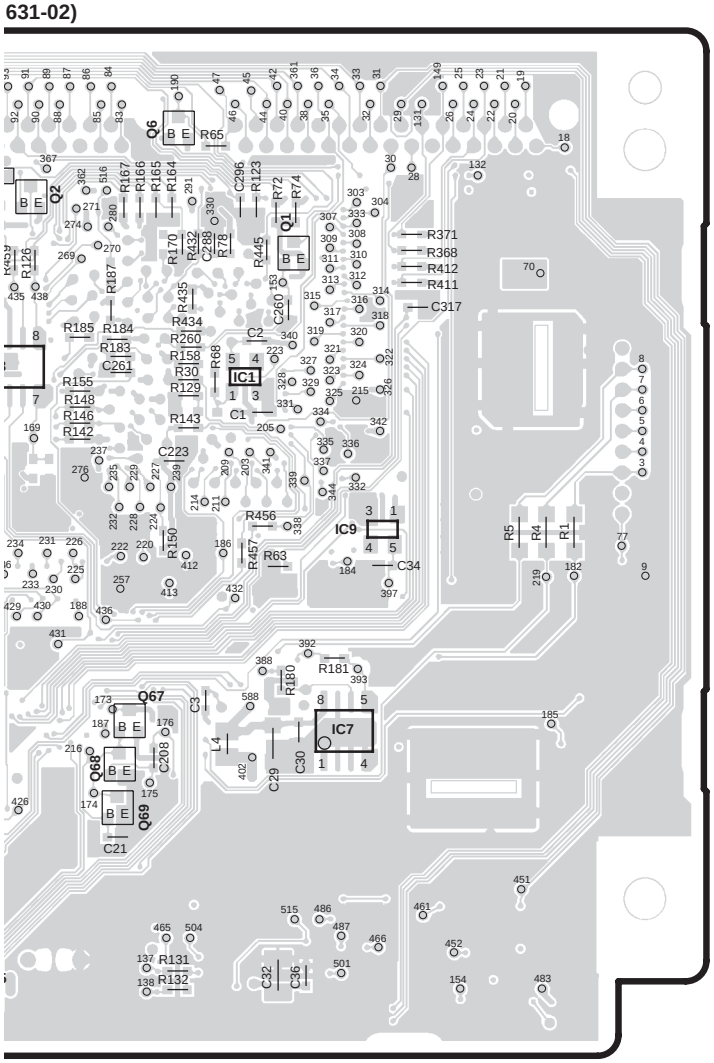

X14-9490-10

Ref. No.	Address
IC1	5U
IC7	6V
IC8	5T
IC9	5V
IC17	7T
IC18	4S
IC800	2R
Q1	4U
Q2	4U
Q4	6S
Q6	4U
Q14	6R
Q24	5S
Q26	4T
Q28	4T
Q29	4T
Q31	7R
Q33	7R
Q34	5S
Q35	5S
Q36	5S
Q37	5S
Q38	7R
Q39	5S
Q41	5S
Q42	6R
Q43	5R
Q46	5R
Q47	6R
Q48	5R
Q55	7T
Q56	7T
Q57	7S
Q58	7T
Q61	6S
Q67	6U
Q68	6U
Q69	6U
Q70	6S
Q701	2V
Q800	3U
Q801	3U
Q802	3U
Q803	2V
Q804	2V
Q805	2U
Q806	2U
Q807	2U

Refer to the schematic diagram for the values of resistors and capacitors.

FGZ000UF2

PC BOARD (COMPONENT SIDE VIEW)

VIDEO UNIT X35-4252-71 (J74-1651-02)

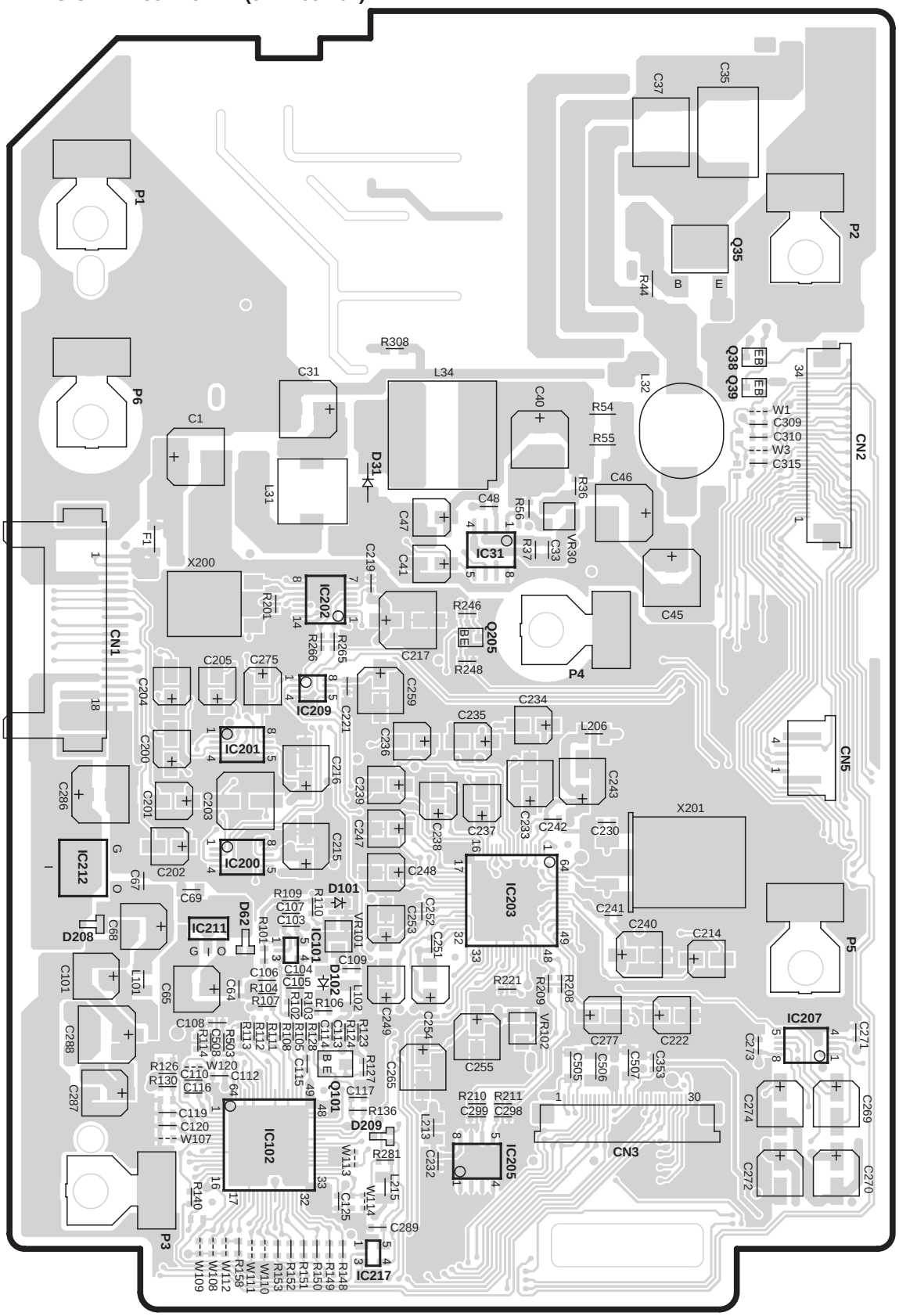

X35-4252-71

Ref No.	Address
IC31	4AB
IC101	5AA
IC102	6AA
IC200	5AA
IC201	5AA
IC202	4AA
IC203	5AB
IC205	6AB
IC207	6AC
IC209	4AA
IC211	5AA
IC212	5Z
IC217	7AA
Q35	2AC
Q38	3AC
Q39	3AC
Q101	6AA
Q205	4AB

Refer to the schematic diagram for the values of resistors and capacitors.

PC BOARD (FOIL SIDE VIEW)

VIDEO UNIT X35-4252-71 (J74-1651-02)

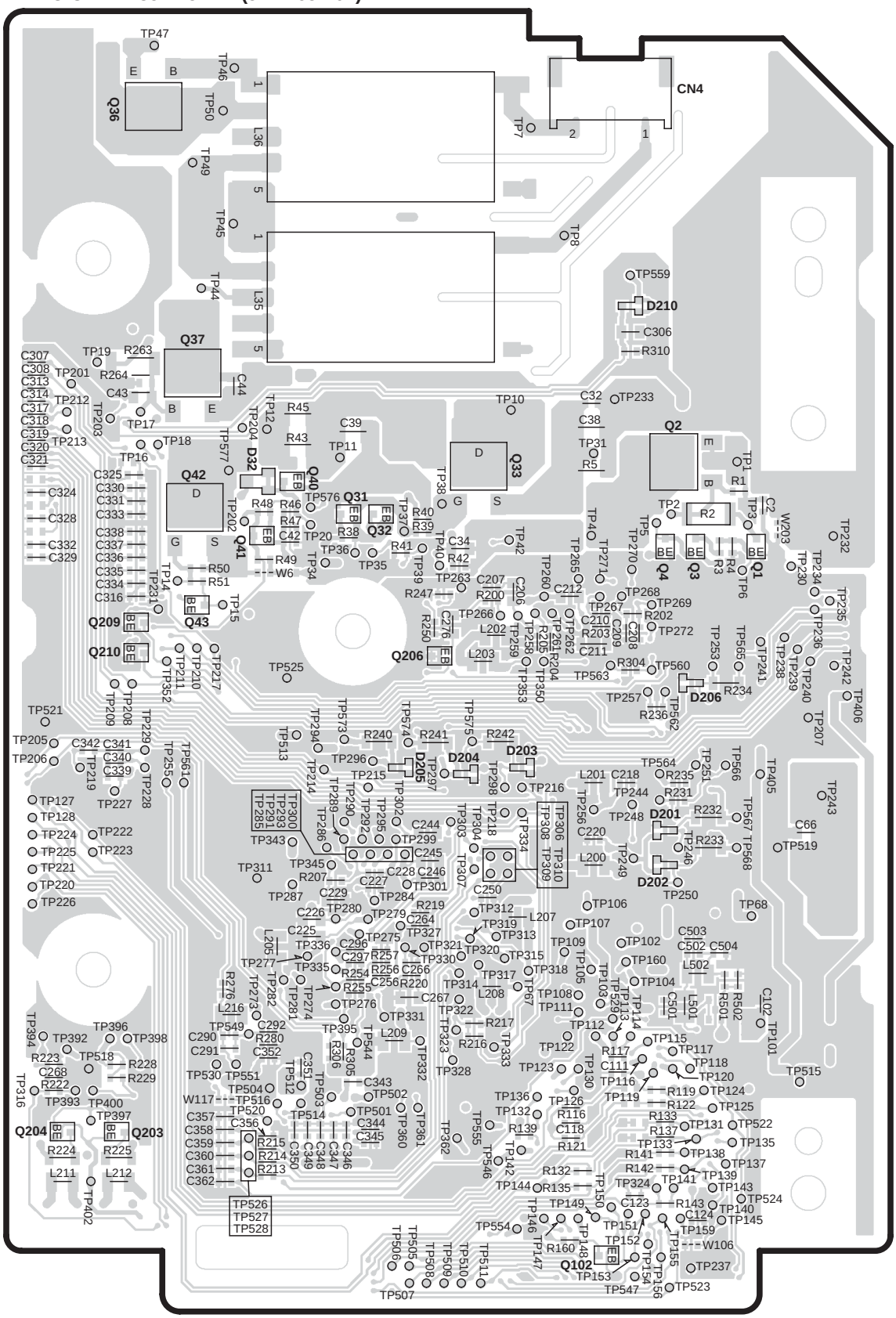

X35-4252-71

Ref No.	Address
Q1	4AH
Q2	3AG
Q3	4AH
Q4	4AG
Q31	3AF
Q32	4AF
Q33	3AG
Q36	2AE
Q37	3AE
Q40	3AF
Q41	4AF
Q42	3AE
Q43	4AE
Q102	7AG
Q203	6AE
Q204	6AE
Q206	4AF
Q209	4AE
Q210	4AE

Refer to the schematic diagram for the values of resistors and capacitors.

FGZ000UF2

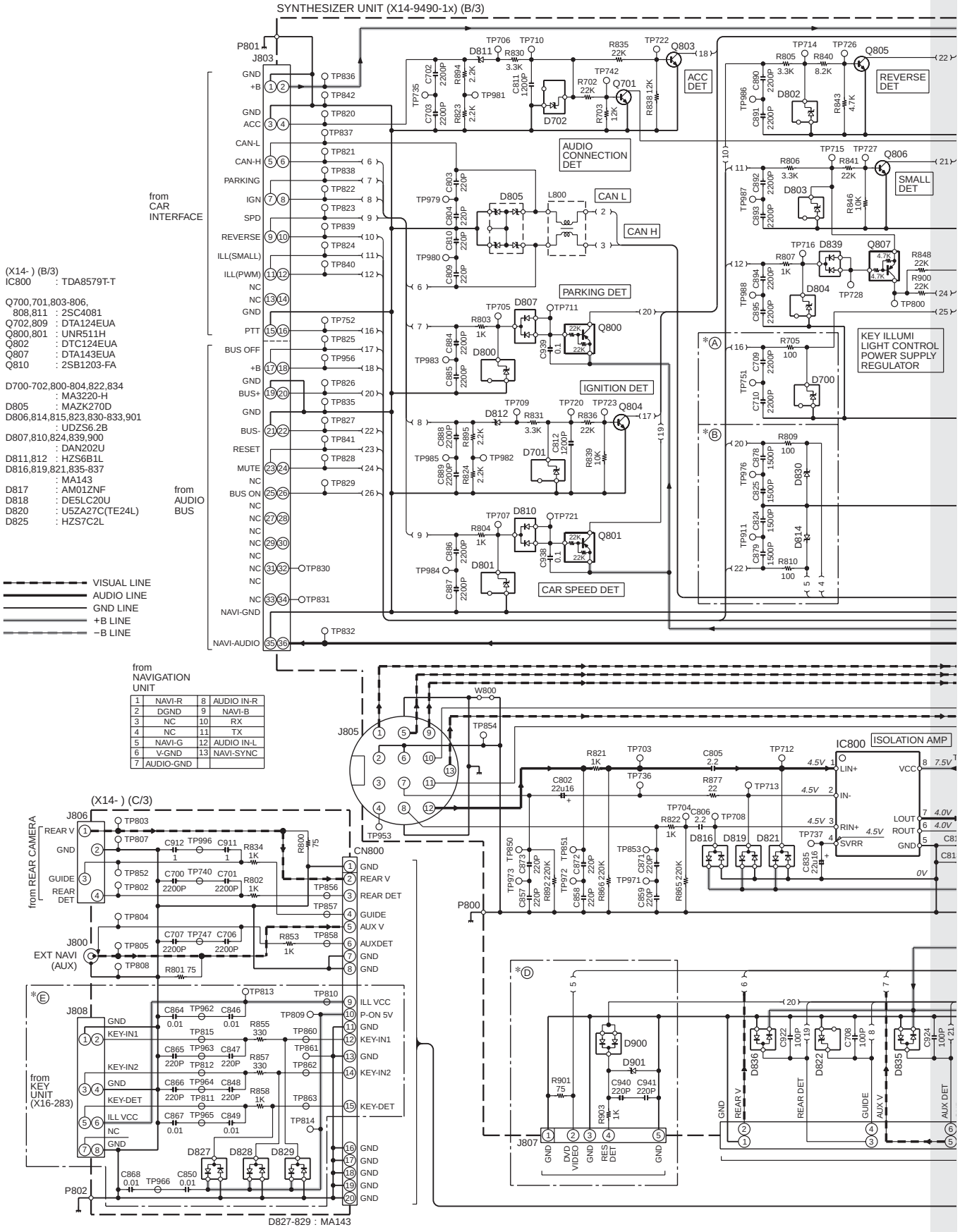

1	NAVI-R	8	AUDIO IN-R
2	DGND	9	NAVI-B
3	NC	10	RX
4	NC	11	TX
5	NAVI-G	12	AUDIO IN-L
6	V-GND	13	NAVI-SYNC
7	AUDIO-GND		

CAUTION : For continued safety, replace safety critical components only with manufacturer's recommended parts (refer to parts list). ⚠ Indicates safety critical components. To reduce the risk of electric shock, leakage-current or resistance measurements shall be carried out (exposed parts are acceptably insulated from the supply circuit) before the appliance is returned to the customer.

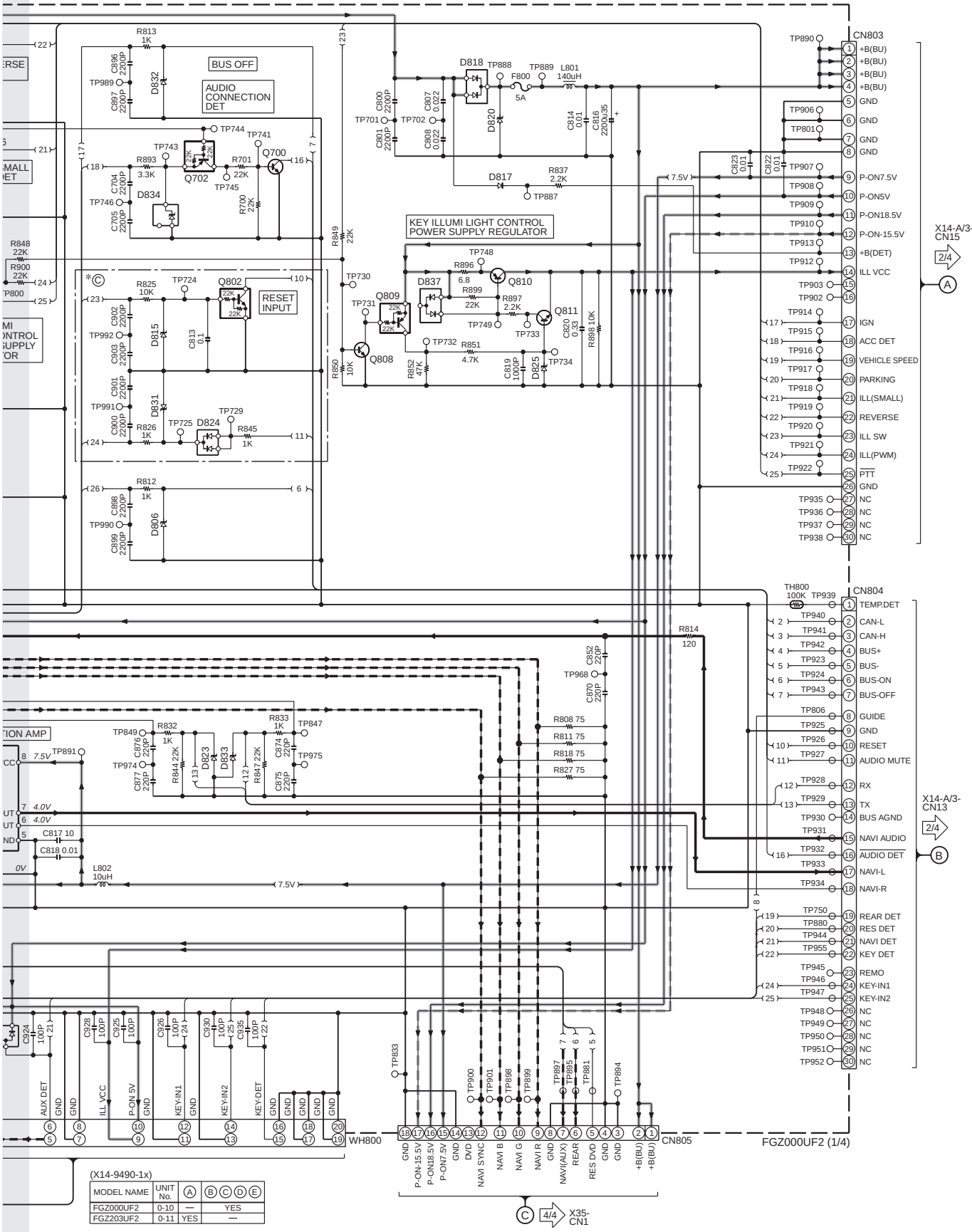

- DC voltages are as measured with a high impedance voltmeter. Values may vary slightly due to variations between individual instruments or/and units.

FGZ000UF2

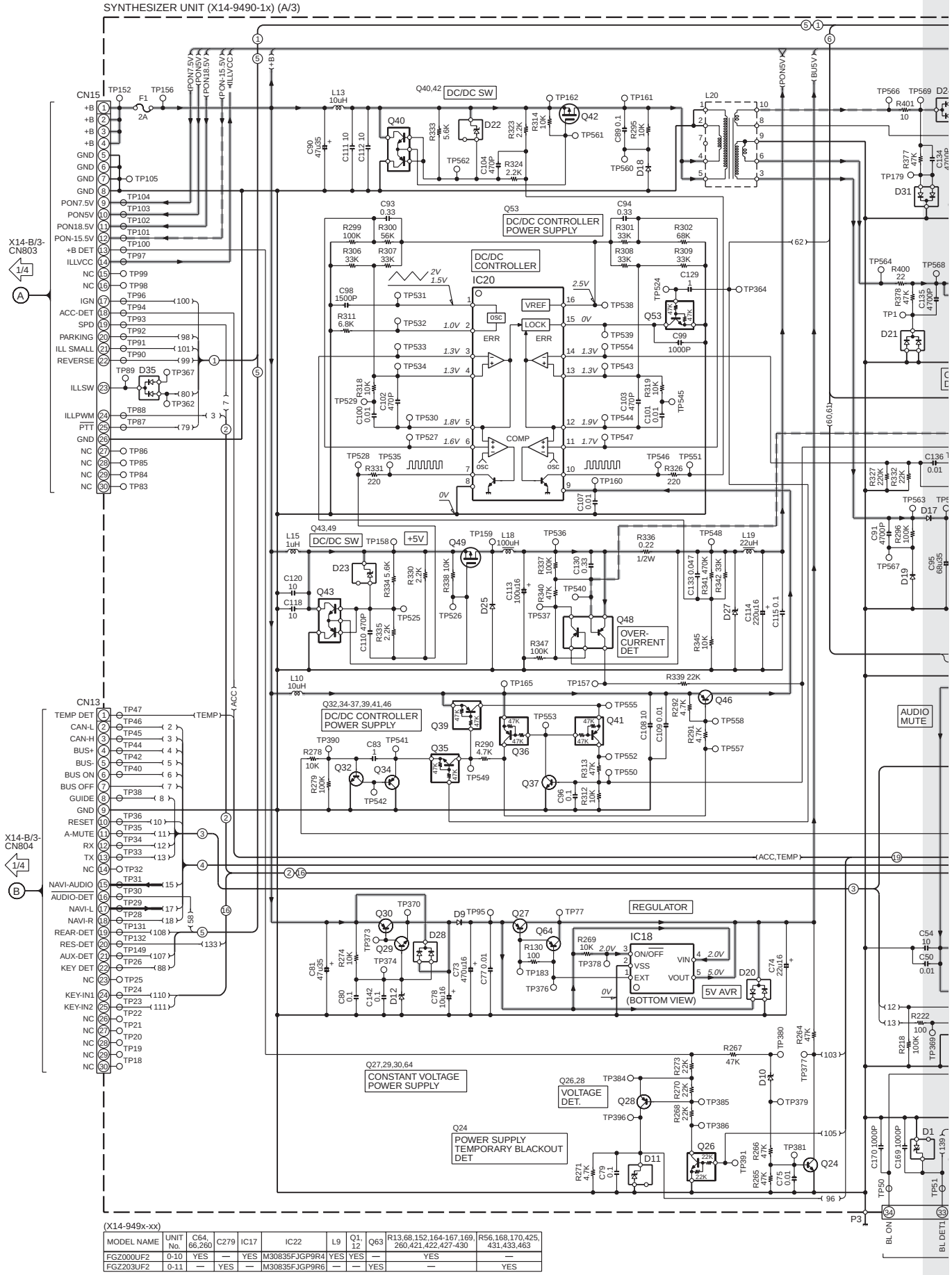

(X14-949x-xx)

MODEL NAME	UNIT No.	C64, 66,260	C279	IC17	IC22	L9	Q1, 12	Q63	R13,68,152,164-167,169, 260,421,422,427-430	R56,168,170,425, 431,433,463
FGZ000UF2	0-10	YES	—	YES	M30835FJGP9R4	YES	YES	—	YES	—
FGZ203UF2	0-11	—	YES	—	M30835FJGP9R6	—	—	YES	—	YES

FGZ000UF2

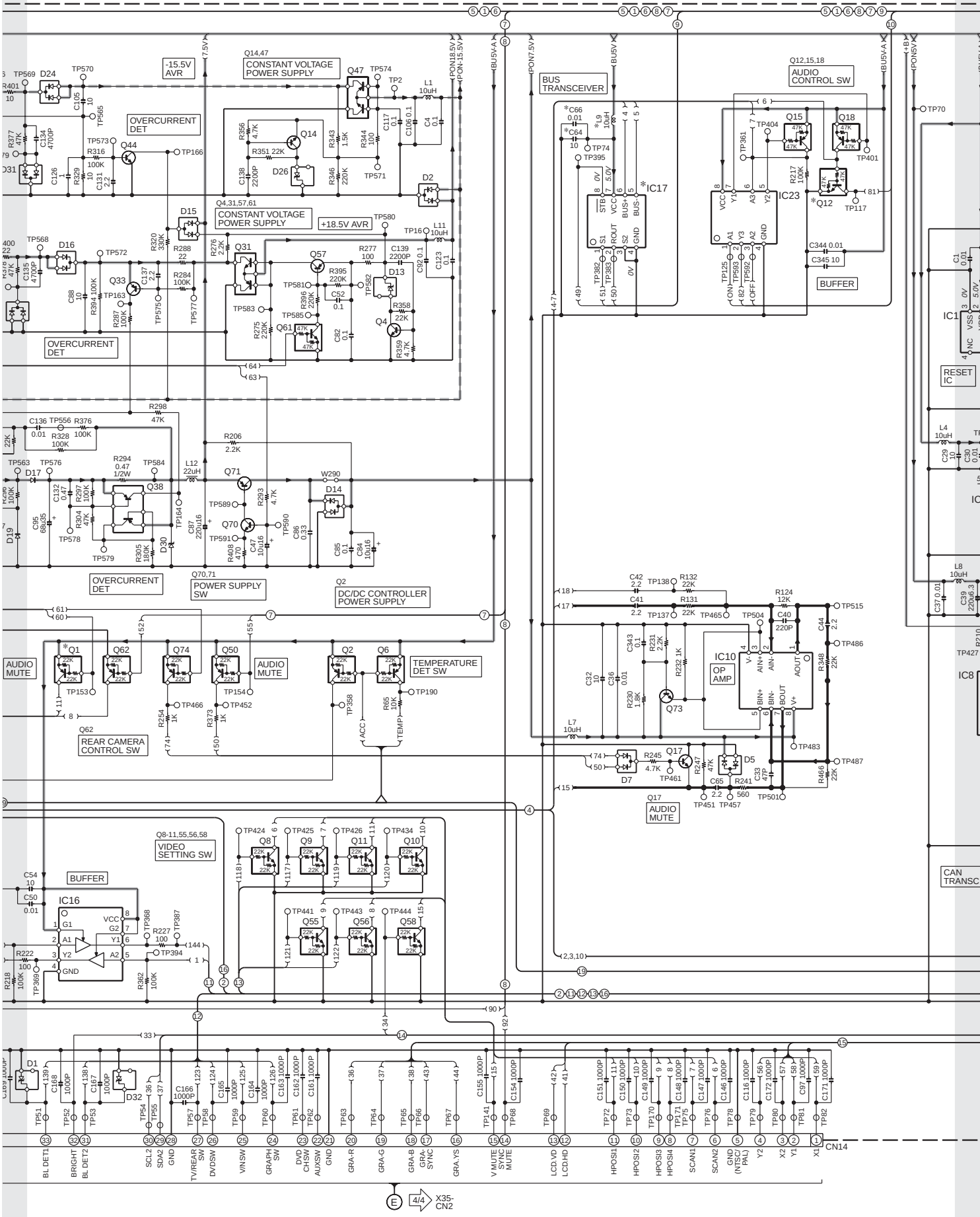
-15.5V AVR
CONSTANT VOLTAGE POWER SUPPLY
OVERCURRENT DET
CONSTANT VOLTAGE POWER SUPPLY
+18.5V AVR
OVERCURRENT DET
OVERCURRENT DET
POWER SUPPLY SW
DC/DC CONTROLLER POWER SUPPLY
BUS TRANSCEIVER
AUDIO CONTROL SW
BUFFER
RESET IC
AUDIO MUTE
AUDIO MUTE
TEMPERATURE DET SW
REAR CAMERA CONTROL SW
OP AMP
AUDIO MUTE
VIDEO SETTING SW
BUFFER
CAN TRANSC
CN14
BL DET1
BRIGHT
BL DET2
SCL2
SDA2
GND
TV/REAR SW
DV/DSW
V/N SW
GRAPH SW
DVD CHSW
AUX SW
GND
GRA-R
GRA-G
GRA-B
GRA-SYNC
GRA.YS
V MUTE
SYNC MUTE
LCD.VD
LCD.HD
HPOSI1
HPOSI2
HPOSI3
HPOSI4
SCAN1
SCAN2
GND (NTSC/PAL)
Y2
X2
Y1
X1
X35-CN2

FGZ000UF2

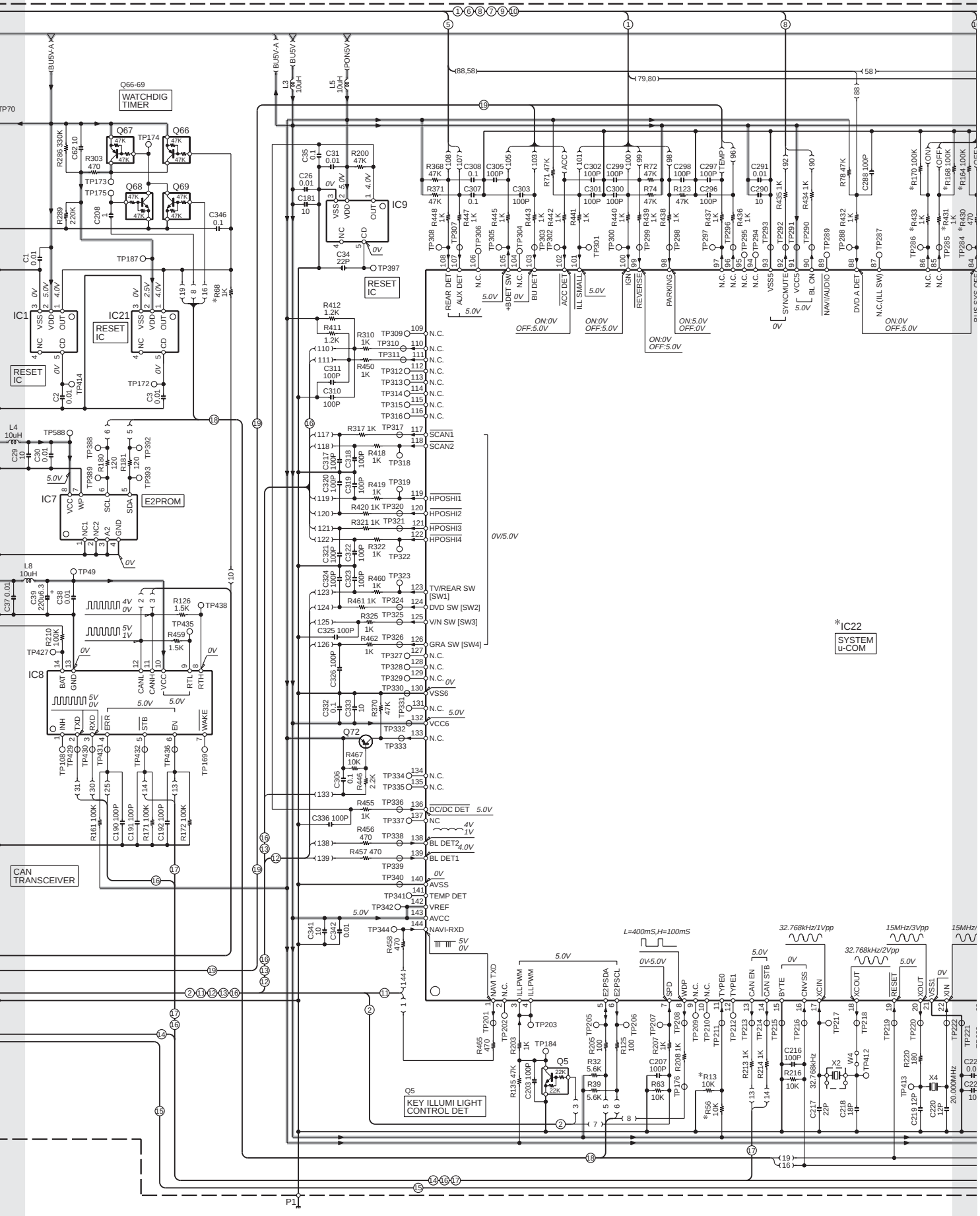
WATCHDIG TIMER
RESET IC
E2PROM
CAN TRANSCEIVER
KEY ILLUMI LIGHT CONTROL DET
SYSTEM u-COM
REAR DET
AUX DET
BU DET
ACC DET
ILL SMALL
REVERSE
PARKING
DVD A DET
N.C.(ILL SW)
SYNCMUTE
NAVI/AUDIO
BL ON
VCC5
SCAN1
SCAN2
HPOSHI1
HPOSHI2
HPOSHI3
HPOSHI4
TV/REAR SW [SW1]
DVD SW [SW2]
V/N SW [SW3]
GRA SW [SW4]
DC/DC DET
BL DET2
BL DET1
AVSS
TEMP DET
VREF
AVCC
NAVI-RXD
NAVI TXD
ILLPWM
E2PSDA
E2PSCL
SPD
WDP
TYPE0
TYPE1
CAN EN
CAN STB
BYTE
CNVSS
XCIN
XCOUT
RESET
XOUT
VSS1
XIN
32.768kHz/1Vpp
32.768kHz/2Vpp
15MHz/3Vpp
L=400mS,H=100mS

FGZ000UF2

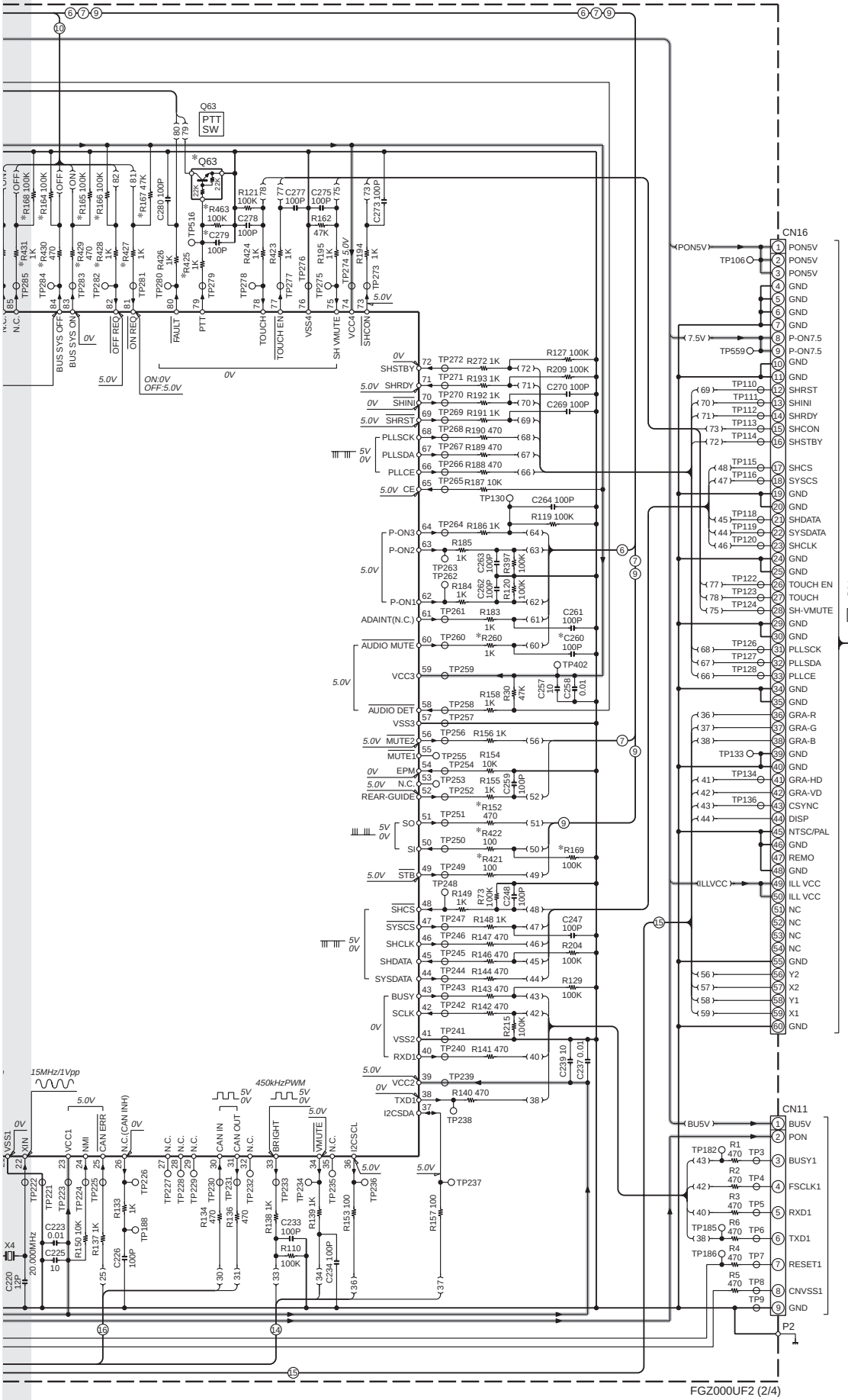

CAUTION : For continued safety, replace safety critical components only with manufacturer's recommended parts (refer to parts list).
⚠ Indicates safety critical components. To reduce the risk of electric shock, leakage-current or resistance measurements shall be carried out (exposed parts are acceptably insulated from the supply circuit) before the appliance is returned to the customer.

- DC voltages are as measured with a high impedance voltmeter. Values may vary slightly due to variations between individual instruments or/and units.

IC1,9 : S-80943CNMC
IC7 : S-24CS08AFJ-TB
IC8 : TJA1054
IC10 : NJM4565MD-ZB
IC16 : TC7WH126FU
IC17 : HA12187FP
IC18 : S-816A50AMC-T2
IC20 : BA9743AFV
IC21 : S-80925CNMC
IC22 : *
IC23 : TC7WHU04FU

Q1,2,6,50,74 : DTA124EUA
Q4,14,24,29,32,37,44,70,73 : 2SC4081
Q5,8-11,26,55,56,58,62,63 : DTC124EUA
Q12,35,53,61,68,69 : DTC144EUA
Q15,18,36,39,41,66,67 : DTA144EUA
Q17 : 2SD2114K
Q27,30 : 2SB1203-FA
Q28,33,34,57,64,72 : 2SA1576A
Q31,40,43,47 : FMY6
Q38,48 : IMT1A
Q42,49 : 2SJ327Z
Q46,71 : 2SB1188(Q,R)

D1 : MA3056-M
D2,5,14,20 : MA143
D7,28,35 : DAN202U
D9,18,19 : 1SR154-400
D10,27 : HZS6B1L
D11,32 : MA3047-H
D12 : HZS161L
D13,22,23 : HZM16N(B2)
D15 : DAP202U
D16,21,24,31 : 1SS184
D17,25 : EC31QS06TE12L
D26 : HZM13N(B1)
D30 : HZS11B2L

AUDIO LINE
GND LINE
+B LINE
−B LINE

FGZ000UF2

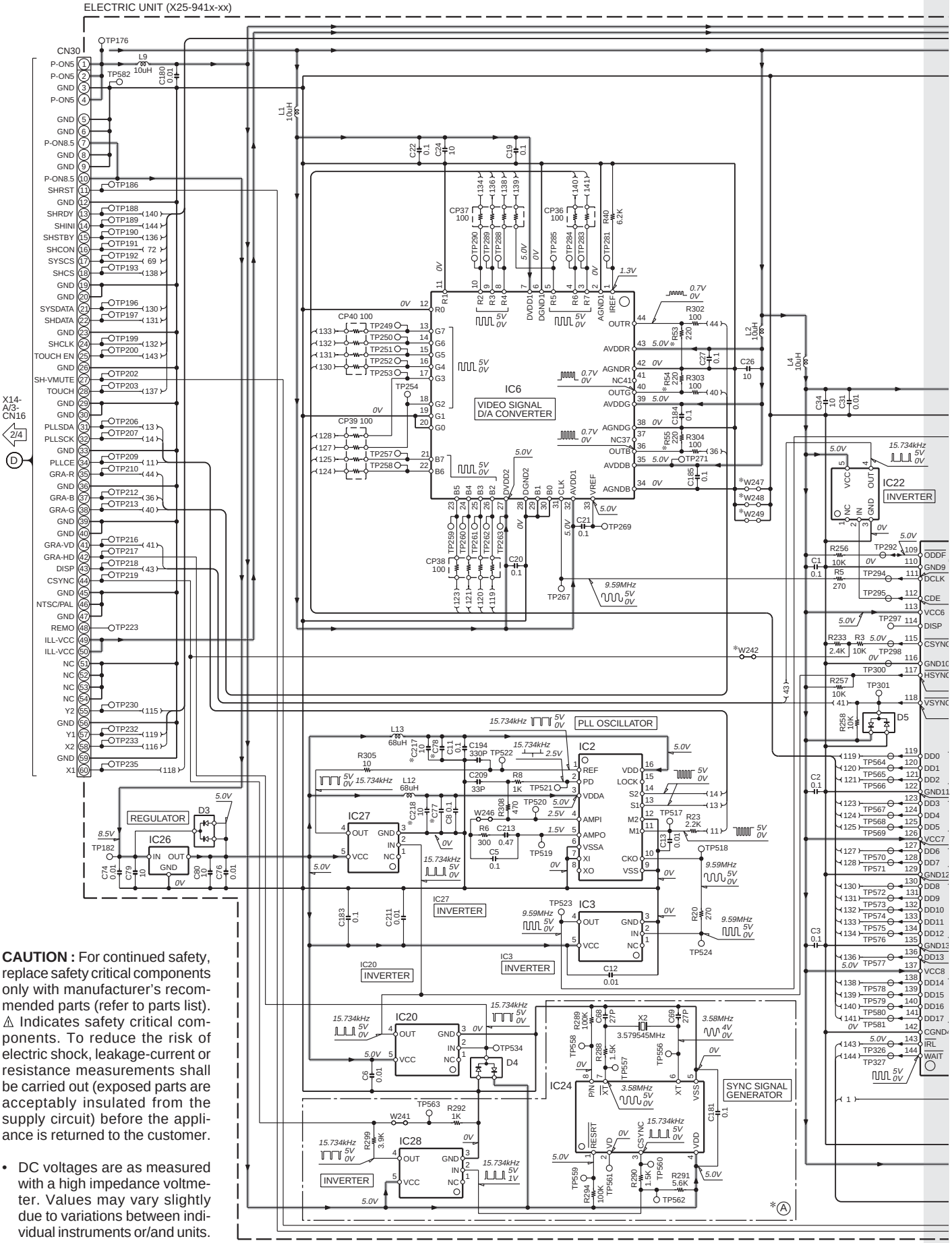

CAUTION : For continued safety, replace safety critical components only with manufacturer's recommended parts (refer to parts list). ⚠ Indicates safety critical components. To reduce the risk of electric shock, leakage-current or resistance measurements shall be carried out (exposed parts are acceptably insulated from the supply circuit) before the appliance is returned to the customer.

- DC voltages are as measured with a high impedance voltmeter. Values may vary slightly due to variations between individual instruments or/and units.

FGZ000UF2

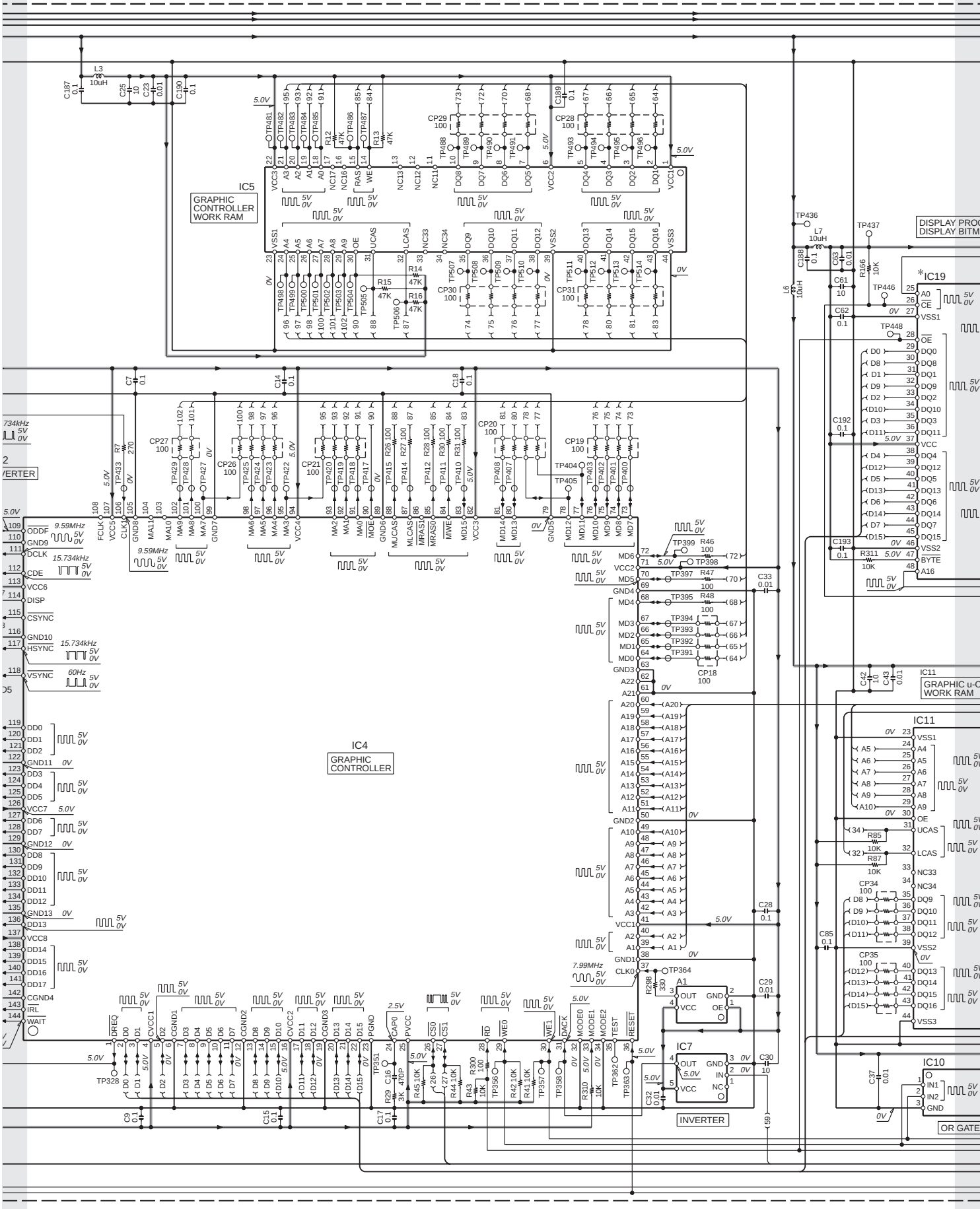
IC5
GRAPHIC CONTROLLER WORK RAM
IC4
GRAPHIC CONTROLLER
IC19
IC11
GRAPHIC u-C WORK RAM
IC10
OR GATE
INVERTER
DISPLAY PROC
DISPLAY BITM

FGZ000UF2

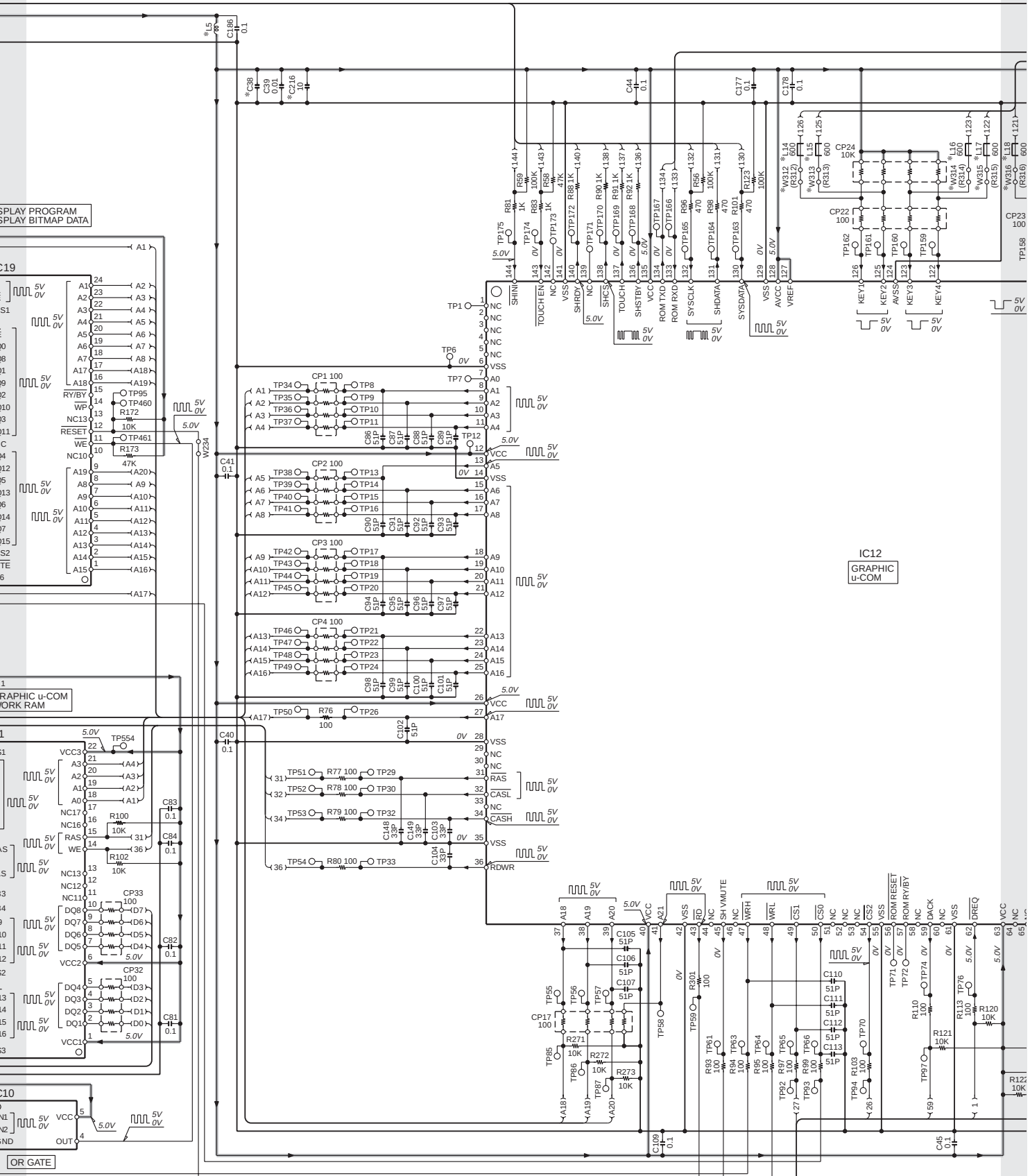
IC12
GRAPHIC
u-COM
SPLAY PROGRAM
SPLAY BITMAP DATA
RAPHIC u-COM
ORK RAM
OR GATE

FGZ000UF2

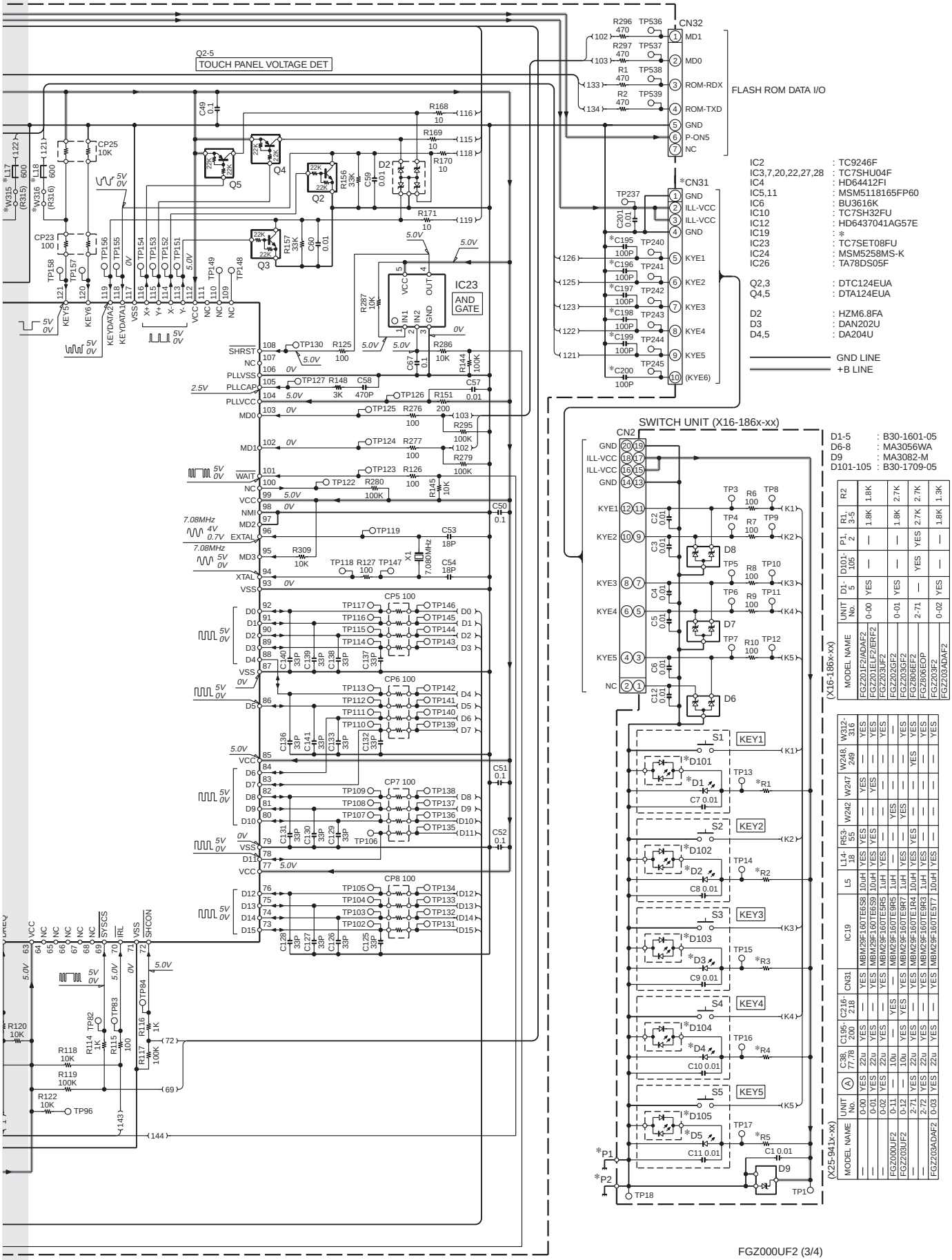

MODEL NAME	UNIT No.	D1-5	D101-105	P1, 2	R1, 3-5	R2
FGZ001F2/ADAF2	0-00	YES	—	—	1.8K	1.8K
FGZ201ELF2/ERF2						
FGZ203UF2	0-01	YES	—	—	1.8K	2.7K
FGZ202GF2	0-01	YES	—	YES	2.7K	2.7K
FGZ203GF2			YES			
FGZ806EF2	2-71	—	—	—	1.8K	1.3K
FGZ806EOP						
FGZ203F2	0-02	YES	—	—		
FGZ203ADAF2						

MODEL NAME	UNIT No.	Ⓐ	C38, 77,78	C195-200	C216-218	CN31	IC19	L5	L14-18	R53-55	W242	W247	W248, 249	W312-316
—	0-00	YES	22u	YES	—	YES	M8M29F160TE6S8	10uH	YES	YES	—	YES	—	YES
—	0-01	YES	22u	YES	—	YES	M8M29F160TE9S8	10uH	YES	YES	—	YES	—	YES
—	0-02	YES	22u	YES	—	YES	M8M29F160TE9R6	1uH	YES	—	—	—	—	YES
FGZ000UF2	0-11	—	10u	YES	YES	YES	M8M29F160TE9R4	1uH	YES	YES	YES	—	YES	YES
FGZ203UF2	0-12	—	10u	YES	—	YES	M8M29F160TE9R7	1uH	YES	YES	—	—	—	YES
—	2-71	YES	22u	YES	—	YES	M8M29F160TE1R4	10uH	YES	YES	—	—	—	YES
—	2-72	YES	22u	YES	—	YES	M8M29F160TE9R3	1uH	YES	YES	—	—	—	YES
FGZ203ADAF2	0-03	YES	22u	YES	—	YES	M8M29F160TE5T7	10uH	YES	YES	—	—	—	YES

FGZ000UF2

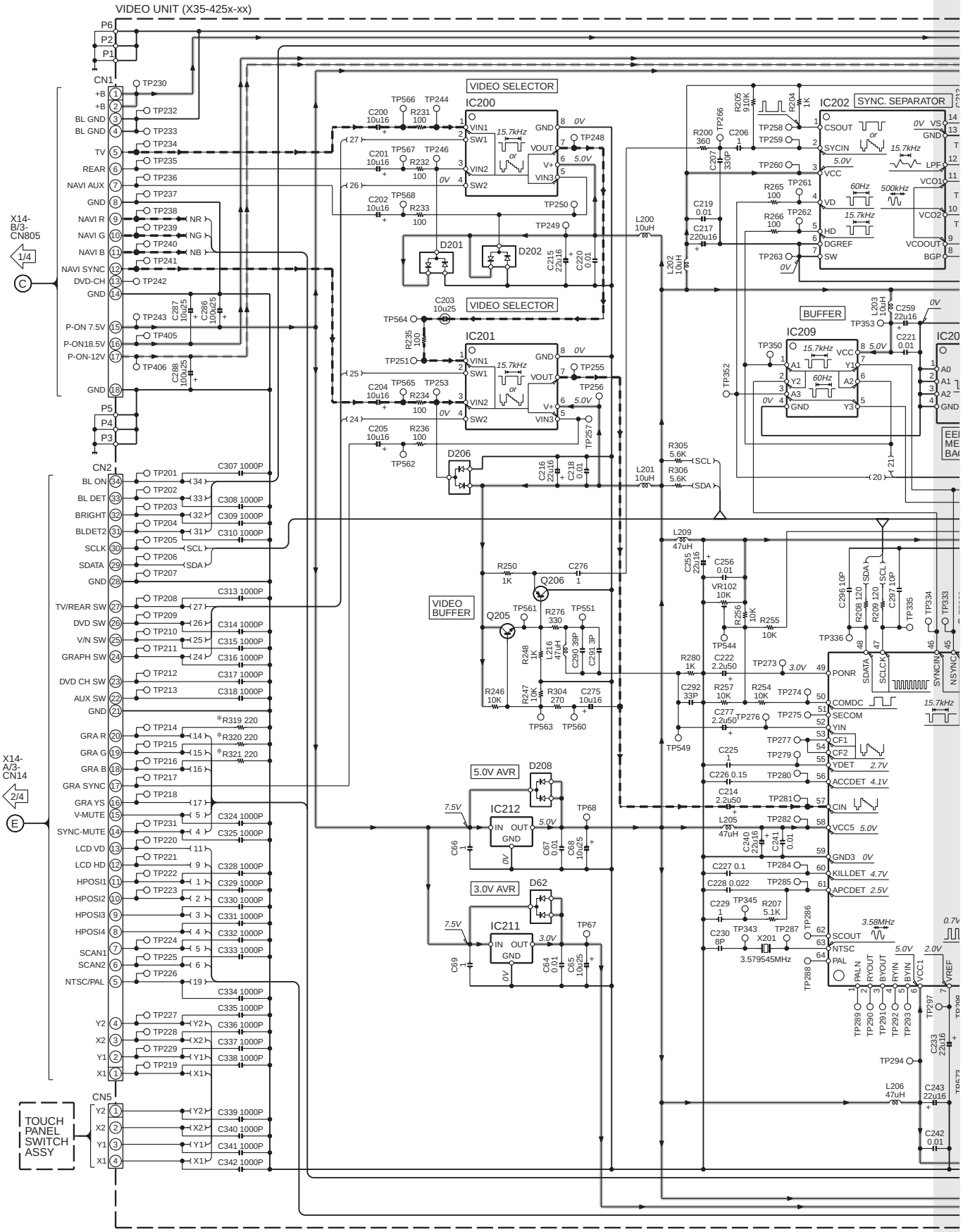
VIDEO UNIT (X35-425x-xx)
CN1
CN2
CN5
VIDEO SELECTOR
IC200
IC201
IC202 SYNC. SEPARATOR
IC209
BUFFER
VIDEO BUFFER
5.0V AVR
3.0V AVR
IC212
IC211
D201
D202
D206
D208
D62
Q205
Q206
X14-B/3-CN805
X14-A/3-CN14
TOUCH PANEL SWITCH ASSY
3.579545MHz
15.7kHz
60Hz
500kHz

FGZ000UF2

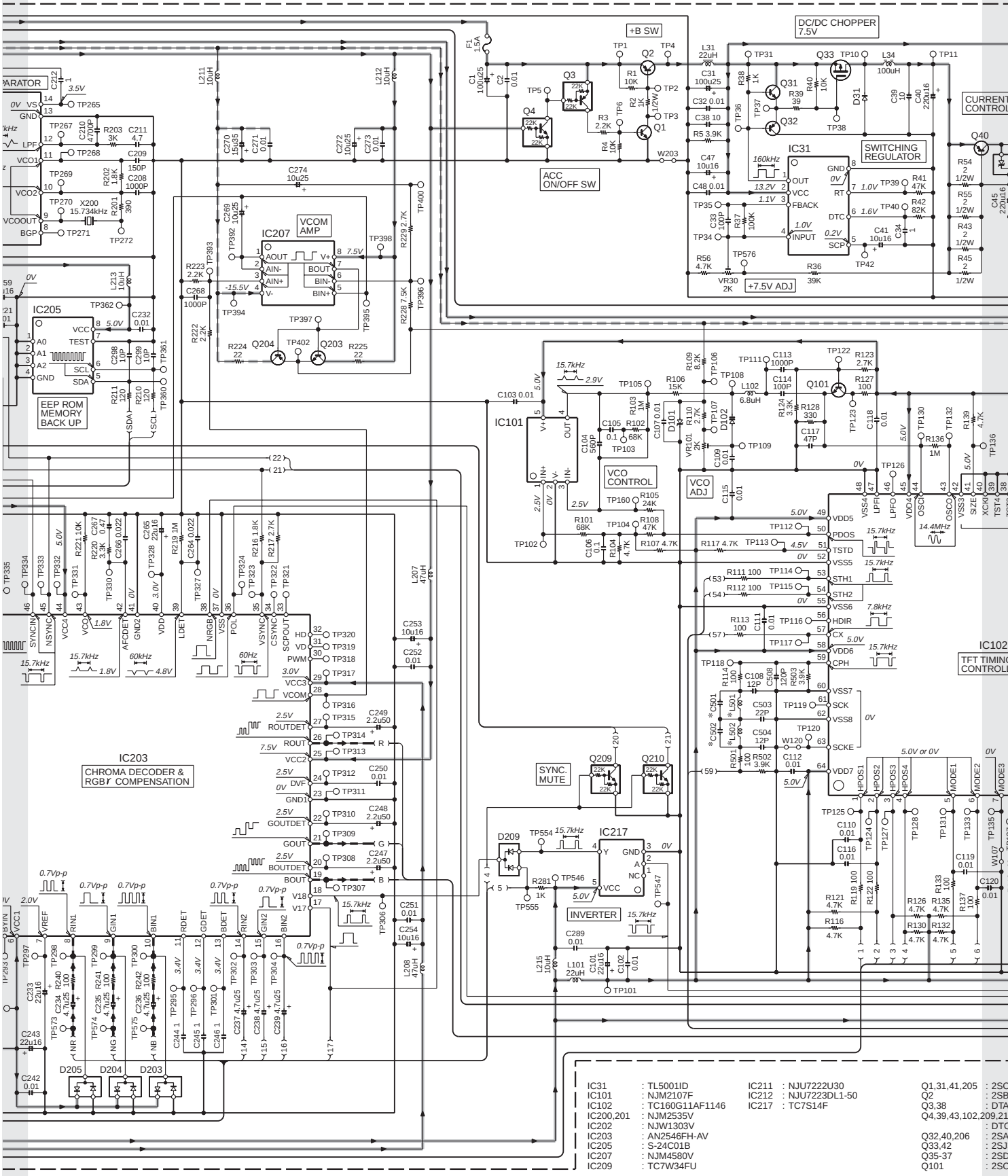

IC31	: TL5001ID	IC211	: NJU7222U30	Q1,31,41,205	: 2SC
IC101	: NJM2107F	IC212	: NJU7223DL1-50	Q2	: 2SB
IC102	: TC160G11AF1146	IC217	: TC7S14F	Q3,38	: DTA
IC200,201	: NJM2535V			Q4,39,43,102,209,21	
IC202	: NJW1303V				: DTC
IC203	: AN2546FH-AV			Q32,40,206	: 2SA
IC205	: S-24C01B			Q33,42	: 2SJ
IC207	: NJM4580V			Q35-37	: 2SD
IC209	: TC7W34FU			Q101	: 2SC

FGZ000UF2

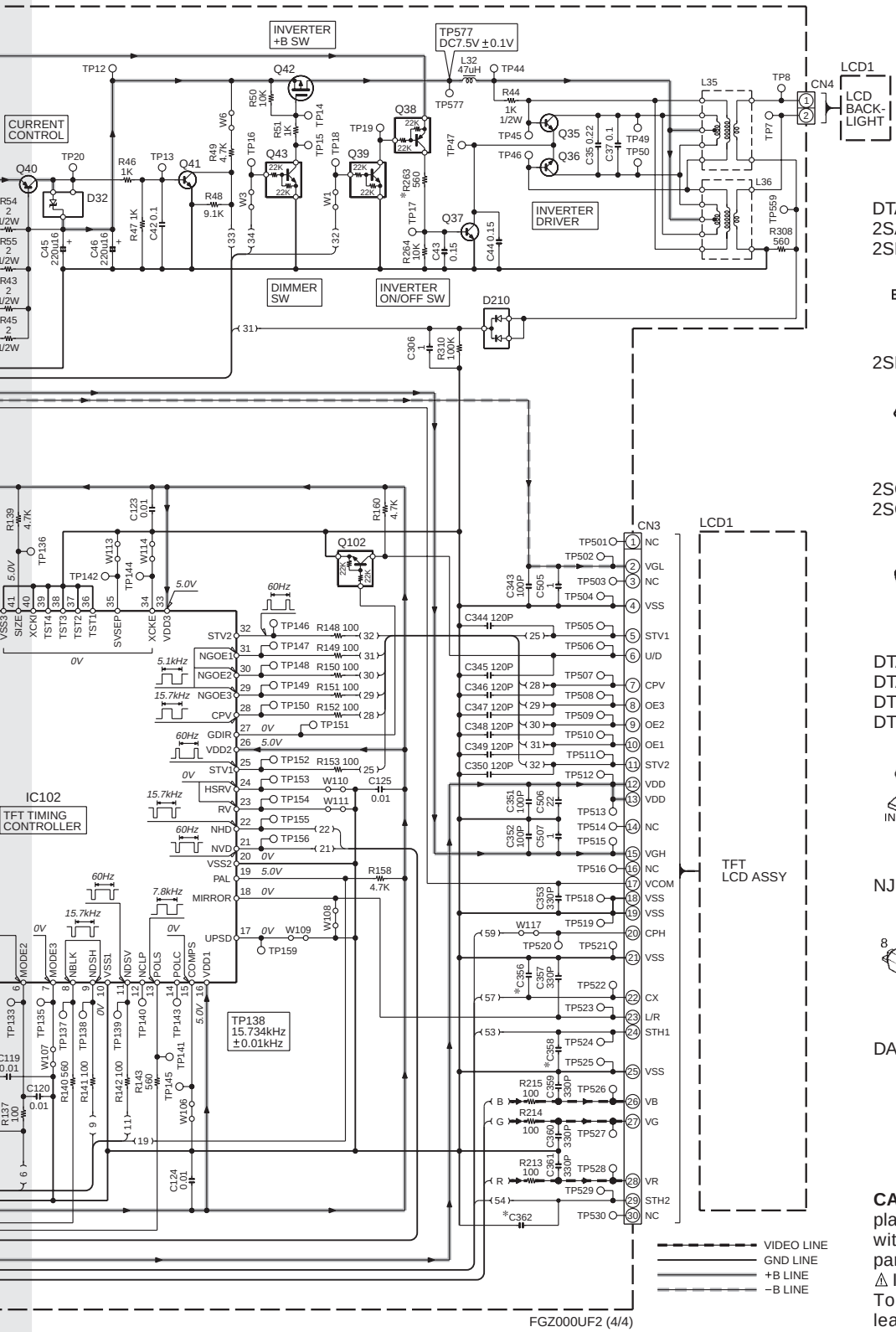

FGZ000UF2 (4/4)

DAP202U
DA204U

MA143

DTA144EUA
2SA1576A
2SD2114K

TC7SET08FU

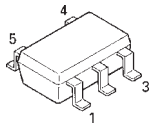

2SB1188

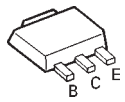

NJM4580V
TC7WHU04FU
TC7WH126FU

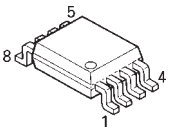

2SC2411K
2SC4081

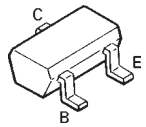

NJM2107F

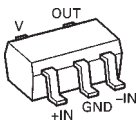

DTA124EUA
DTA143EUA
DTC124EUA
DTC144EUA

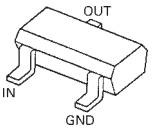

TC7SH32FU

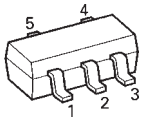

NJM4565MD-ZB

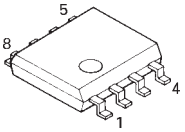

HA12187FP

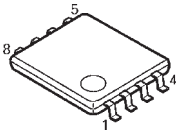

DAN202U

CAUTION : For continued safety, replace safety critical components only with manufacturer's recommended parts (refer to parts list).
⚠ Indicates safety critical components.
To reduce the risk of electric shock, leakage-current or resistance measurements shall be carried out (exposed parts are acceptably insulated from the supply circuit) before the appliance is returned to the customer.

- DC voltages are as measured with a high impedance voltmeter. Values may vary slightly due to variations between individual instruments or/and units.

,205 : 2SC4081
: 2SB1203-FA
: DTA124EUA
,102,209,210
: DTC124EUA
206 : 2SA1576A
: 2SJ327Z
: 2SD1803
: 2SC2411K

Q203 : 2SC4097
Q204 : 2SA1577

D31 : RB060L-40
D32 : MA3110-M
D62,208-210 : DAN202U
D101 : MA8051-M
D102 : MA335
D201-206 : DA204U

(X35-425x-xx)

MODEL NAME	UNIT No.	C356	C358	C362	C501	C502	L501, 502	R263	R319-321
FGZ201F2/ADAF2	0-00	120P	51P	120P	6P	3P	1uH	560 1/4W	NO
FGZ201ELF2/ERF2									
FGZ202GF2	0-01	120P	51P	120P	6P	3P	1uH	560 1/2W	YES
FGZ806EF2	2-71	270P	68P	220P	10P	5P	0.56uH	560 1/2W	YES
FGZ806EOP									
FGZ000UF2									
FGZ203UF2									

EXPLODED VIEW

B M3x6 : N35-3006-48
C ϕ2x6 : N82-2006-48
D ϕ3x6 : N89-3006-48
E : N09-4461-05

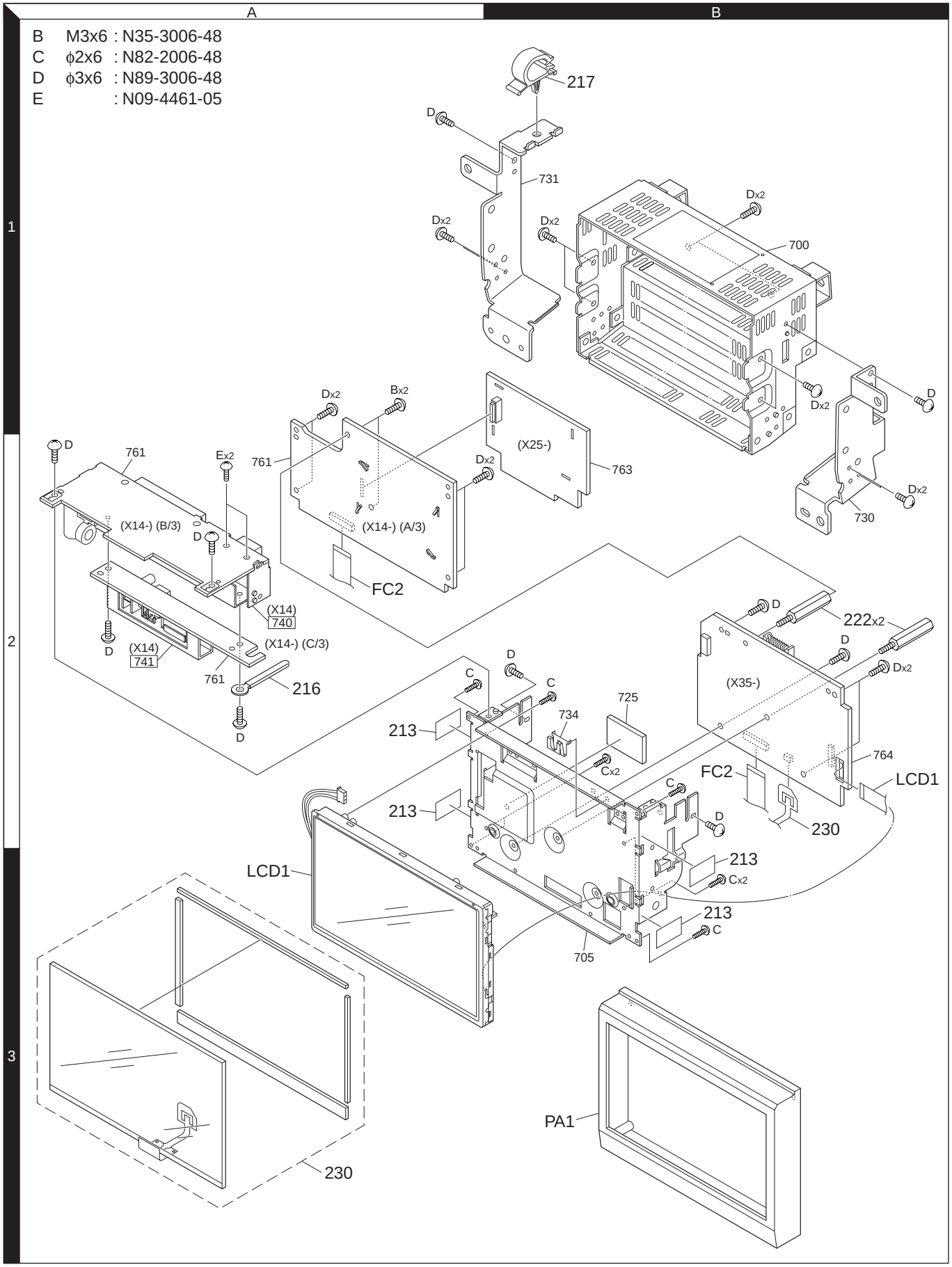

Parts with the exploded numbers larger than 700 are not supplied.

FGZ000UF2

PARTS LIST

✻ New parts
Parts without **Parts No.** are not supplied.
Les articles non mentionnes dans le **Parts No.** ne sont pas fournis.
Teile ohne **Parts No.** werden nicht geliefert.

Ref. No.	Add	New	Parts No.	Description			Destination
FGZ000UF2							
PA1	3B	✻	A64-3397-01	PANEL			
LCD1	3A		B38-1100-05	LCD			
FC2	2A		E39-0525-05	FLAT CABLE			
213	2A		G16-1461-04	SHEET			
-			H21-1155-04	PROTECTION SHEET (SCREEN)			
216	2A		J19-4635-05	LEAD HOLDER			
217	1B	✻	J19-7035-15	HOLDER			
222	2B		J39-0856-05	SPACER			
B	1A		N35-3006-48	BINDING HEAD MACHINE SCREW			
C	2B		N82-2006-48	BINDING HEAD TAPTITE SCREW			
D	1A		N89-3006-48	BINDING HEAD TAPTITE SCREW			
230	3A		S79-0852-05	SWITCH ASSY			
SYNTHESIZER UNIT (X14-9490-10)							
C1-3			CK73GB1H103K	CHIP C	0.010UF	K	
C4			CK73GB1H104K	CHIP C	0.10UF	K	
C26			CK73GB1H103K	CHIP C	0.010UF	K	
C29			CK73EB0J106K	CHIP C	10UF	K	
C30,31			CK73GB1H103K	CHIP C	0.010UF	K	
C32			CK73DF1C106Z	CHIP C	10UF	Z	
C33			CC73GCH1H470J	CHIP C	47PF	J	
C34			CC73GCH1H220J	CHIP C	22PF	J	
C35			CK73GB1H104K	CHIP C	0.10UF	K	
C36-38			CK73GB1H103K	CHIP C	0.010UF	K	
C39			C92-1429-05	ELECTRO	220UF	6.3WV	
C40			CC73GCH1H221J	CHIP C	220PF	J	
C41,42			CK73FB1A225K	CHIP C	2.2UF	K	
C44			CK73FB1A225K	CHIP C	2.2UF	K	
C47			C92-0671-05	ELECTRO	10UF	16WV	
C50			CK73GB1H103K	CHIP C	0.010UF	K	
C52			CK73GB1H104K	CHIP C	0.10UF	K	
C54			CK73EB0J106K	CHIP C	10UF	K	
C62			CK73EB0J106K	CHIP C	10UF	K	
C64			CK73EB0J106K	CHIP C	10UF	K	
C65			CK73FB1A225K	CHIP C	2.2UF	K	
C66			CK73GB1H103K	CHIP C	0.010UF	K	
C73			C94-0017-05	ELECTRO	470UF	16WV	
C74			C92-0672-05	ELECTRO	22UF	16WV	
C75			CK73GB1H103K	CHIP C	0.010UF	K	
C77			CK73GB1H103K	CHIP C	0.010UF	K	
C78			C92-0671-05	ELECTRO	10UF	16WV	
C79,80			CK73GB1H104K	CHIP C	0.10UF	K	
C81			C92-1491-05	ELECTRO	47UF	35WV	
C82			CK73GB1H104K	CHIP C	0.10UF	K	
C83			CK73FB1C105K	CHIP C	1.0UF	K	
C84			C92-0671-05	ELECTRO	10UF	16WV	
C85			CK73GB1H104K	CHIP C	0.10UF	K	
C86			CK73FB1C334K	CHIP C	0.33UF	K	
C87			C92-1610-05	ELECTRO	220UF	16WV	

Ref. No.	Add	New	Parts No.	Description			Destination
C88			C93-1289-05	CERAMIC	10UF	Z	
C89			CK73GB1H104K	CHIP C	0.10UF	K	
C90			C92-1491-05	ELECTRO	47UF	35WV	
C91			CK73GB1H472K	CHIP C	4700PF	K	
C92			CK73GB1H104K	CHIP C	0.10UF	K	
C93,94			CK73GB1A334K	CHIP C	0.33UF	K	
C95			C92-1490-05	ELECTRO	68UF	35WV	
C96			CK73GB1H104K	CHIP C	0.10UF	K	
C97			CK73GB1H102K	CHIP C	1000PF	K	
C98			CK73GB1H152K	CHIP C	1500PF	K	
C99			CK73GB1H102K	CHIP C	1000PF	K	
C100,101			CK73GB1H103K	CHIP C	0.010UF	K	
C102-104			CC73GCH1H471J	CHIP C	470PF	J	
C105			C93-1289-05	CERAMIC	10UF	Z	
C106			CK73GB1H104K	CHIP C	0.10UF	K	
C107			CK73GB1H103K	CHIP C	0.010UF	K	
C108			C93-1289-05	CERAMIC	10UF	Z	
C109			CK73GB1H103K	CHIP C	0.010UF	K	
C110			CC73GCH1H471J	CHIP C	470PF	J	
C111,112			C93-1289-05	CERAMIC	10UF	Z	
C113			C92-1427-05	ELECTRO	100UF	16WV	
C114			C92-1610-05	ELECTRO	220UF	16WV	
C115			CK73GB1H104K	CHIP C	0.10UF	K	
C116			CK73GB1H102K	CHIP C	1000PF	K	
C117			CK73GB1H104K	CHIP C	0.10UF	K	
C118			C93-1289-05	CERAMIC	10UF	Z	
C120			C93-1289-05	CERAMIC	10UF	Z	
C123			CK73GB1H104K	CHIP C	0.10UF	K	
C126			CK73GB0J105K	CHIP C	1.0UF	K	
C129			CK73GB0J105K	CHIP C	1.0UF	K	
C130			CK73GB1A334K	CHIP C	0.33UF	K	
C131			CK73FB1A225K	CHIP C	2.2UF	K	
C132			CK73GB1A474K	CHIP C	0.47UF	K	
C133			CK73GB1H473K	CHIP C	0.047UF	K	
C134,135			CK73GB1H472K	CHIP C	4700PF	K	
C136			CK73GB1H103K	CHIP C	0.010UF	K	
C137			CK73FB1A225K	CHIP C	2.2UF	K	
C138,139			CK73GB1H222K	CHIP C	2200PF	K	
C142			CK73GB1H104K	CHIP C	0.10UF	K	
C146-151			CK73GB1H102K	CHIP C	1000PF	K	
C154,155			CK73GB1H102K	CHIP C	1000PF	K	
C161-172			CK73GB1H102K	CHIP C	1000PF	K	
C181			CK73EB0J106K	CHIP C	10UF	K	
C190-192			CC73GCH1H101J	CHIP C	100PF	J	
C203			CC73GCH1H101J	CHIP C	100PF	J	
C207			CC73GCH1H101J	CHIP C	100PF	J	
C208			CK73GB0J105K	CHIP C	1.0UF	K	
C216			CC73GCH1H101J	CHIP C	100PF	J	
C217			CC73GCH1H220J	CHIP C	22PF	J	
C218			CC73GCH1H180J	CHIP C	18PF	J	
C219,220			CC73GCH1H120J	CHIP C	12PF	J	
C223			CK73GB1H103K	CHIP C	0.010UF	K	
C225			CK73EB0J106K	CHIP C	10UF	K	
C226			CC73GCH1H101J	CHIP C	100PF	J	
C233,234			CC73GCH1H101J	CHIP C	100PF	J	

E : Europe **K** : North America **M** : Other Areas **W** : Without Europe

⚠ Indicates safety critical components.

PARTS LIST

SYNTHESIZER UNIT (X14-9490-10)

Ref. No.	Add	New	Parts No.	Description			Destination
C237			CK73GB1H103K	CHIP C	0.010UF	K	
C239			CK73EB0J106K	CHIP C	10UF	K	
C247,248			CC73GCH1H101J	CHIP C	100PF	J	
C257			CK73EB0J106K	CHIP C	10UF	K	
C258			CK73GB1H103K	CHIP C	0.010UF	K	
C259-264			CC73GCH1H101J	CHIP C	100PF	J	
C269,270			CC73GCH1H101J	CHIP C	100PF	J	
C273			CC73GCH1H101J	CHIP C	100PF	J	
C275			CC73GCH1H101J	CHIP C	100PF	J	
C277,278			CC73GCH1H101J	CHIP C	100PF	J	
C280			CC73GCH1H101J	CHIP C	100PF	J	
C288			CC73GCH1H101J	CHIP C	100PF	J	
C290			CK73EB0J106K	CHIP C	10UF	K	
C291			CK73GB1H103K	CHIP C	0.010UF	K	
C296-303			CC73GCH1H101J	CHIP C	100PF	J	
C305			CC73GCH1H101J	CHIP C	100PF	J	
C306-308			CK73GB1H104K	CHIP C	0.10UF	K	
C310,311			CC73GCH1H101J	CHIP C	100PF	J	
C317-326			CC73GCH1H101J	CHIP C	100PF	J	
C332			CK73GB1H104K	CHIP C	0.10UF	K	
C333			CK73EB0J106K	CHIP C	10UF	K	
C336			CC73GCH1H101J	CHIP C	100PF	J	
C341			CK73EB0J106K	CHIP C	10UF	K	
C342			CK73GB1H103K	CHIP C	0.010UF	K	
C343			CK73GB1H104K	CHIP C	0.10UF	K	
C344			CK73GB1H103K	CHIP C	0.010UF	K	
C345			CK73EB0J106K	CHIP C	10UF	K	
C346			CK73GB1H104K	CHIP C	0.10UF	K	
C700-707			CK73GB1H222K	CHIP C	2200PF	K	
C708			CC73GCH1H101J	CHIP C	100PF	J	
C800,801			CK73GB1H222K	CHIP C	2200PF	K	
C802			C92-0672-05	ELECTRO	22UF	16WV	
C803,804			CC73GCH1H221J	CHIP C	220PF	J	
C805,806			CK73EB1C225K	CHIP C	2.2UF	K	
C807,808			CK73GB1H223K	CHIP C	0.022UF	K	
C809,810			CC73GCH1H221J	CHIP C	220PF	J	
C811,812			CK73GB1H122K	CHIP C	1200PF	K	
C813			CK73GB1H104K	CHIP C	0.10UF	K	
C814			CK73GB1H103K	CHIP C	0.010UF	K	
C816			C90-5615-05	ELECTRO	2200UF	35WV	
C817			CK73DF1C106Z	CHIP C	10UF	Z	
C818			CK73GB1H103K	CHIP C	0.010UF	K	
C819			CK73GB1H102K	CHIP C	1000PF	K	
C820			CK73FB1C334K	CHIP C	0.33UF	K	
C822,823			CK73GB1H103K	CHIP C	0.010UF	K	
C824,825			CK73GB1H152K	CHIP C	1500PF	K	
C835			C92-0672-05	ELECTRO	22UF	16WV	
C846			CK73GB1H103K	CHIP C	0.010UF	K	
C847,848			CC73GCH1H221J	CHIP C	220PF	J	
C849,850			CK73GB1H103K	CHIP C	0.010UF	K	
C852			CC73GCH1H221J	CHIP C	220PF	J	
C857-859			CC73GCH1H221J	CHIP C	220PF	J	
C864			CK73GB1H103K	CHIP C	0.010UF	K	
C865,866			CC73GCH1H221J	CHIP C	220PF	J	
C867,868			CK73GB1H103K	CHIP C	0.010UF	K	

Ref. No.	Add	New	Parts No.	Description				Destination
C870-877			CC73GCH1H221J	CHIP C	220PF	J		
C878,879			CK73GB1H152K	CHIP C	1500PF	K		
C884-903			CK73GB1H222K	CHIP C	2200PF	K		
C911,912			CK73GB1A105K	CHIP C	1.0UF	K		
C922			CC73GCH1H101J	CHIP C	100PF	J		
C924-926			CC73GCH1H101J	CHIP C	100PF	J		
C928			CC73GCH1H101J	CHIP C	100PF	J		
C930			CC73GCH1H101J	CHIP C	100PF	J		
C935			CC73GCH1H101J	CHIP C	100PF	J		
C938,939			CK73GB1H104K	CHIP C	0.10UF	K		
C940,941			CC73GCH1H221J	CHIP C	220PF	J		
CN11			E41-0948-05	PIN ASSY				
CN13			E41-2092-05	PIN ASSY				
CN14			E40-9744-05	FLAT CABLE CONNECTOR				
CN15			E41-2092-05	PIN ASSY				
CN16			E41-0232-05	PIN ASSY				
CN800			E41-0245-05	PIN ASSY				
CN803,804			E41-2091-05	PIN ASSY				
CN805			E41-0377-05	PIN ASSY				
J800			E63-0886-05	PIN JACK				
J803			E58-0934-05	RECTANGULAR RECEPTACLE				
J805			E56-0809-05	CYLINDRICAL RECEPTACLE				
J806			E08-0413-05	RECTANGULAR RECEPTACLE				
J807		✻	E58-0989-05	RECTANGULAR RECEPTACLE				
J808		✻	E58-1002-05	RECTANGULAR RECEPTACLE				
WH800			E39-0523-15	WIRING HARNESS				
F1			F53-0215-05	FUSE (2A)				
F800			F53-0212-05	FUSE (UL, CSA) (5A)				
L1			L41-1005-33	SMALL FIXED INDUCTOR (10UH)				
L3-5			L41-1005-33	SMALL FIXED INDUCTOR (10UH)				
L7-11			L41-1005-33	SMALL FIXED INDUCTOR (10UH)				
L12			L33-1177-05	CHOKE COIL				
L13			L33-2209-05	SMALL FIXED INDUCTOR (1UH)				
L15			L33-2209-05	SMALL FIXED INDUCTOR (1UH)				
L18			L33-1166-05	CHOKE COIL				
L19			L33-1177-05	CHOKE COIL				
L20		✻	L19-0767-05	TRANSFORMER FOR CONVERTER				
L800			L79-0981-05	LINE FILTER				
L801			L33-1082-05	CHOKE COIL				
L802			L41-1005-33	SMALL FIXED INDUCTOR (10UH)				
X2			L77-2739-05	CRYSTAL RESONATOR (32.768KHZ)				
X4		✻	L77-2852-05	CRYSTAL RESONATOR (20MHZ)				
E	2A		N09-4461-05	TAPTITE SCREW				
R1-6			RK73EB2E471J	CHIP R	470	J	1/4W	
R13			RK73GB2A103J	CHIP R	10K	J	1/10W	
R30			RK73GB2A473J	CHIP R	47K	J	1/10W	
R32			RK73GB2A562J	CHIP R	5.6K	J	1/10W	
R39			RK73GB2A562J	CHIP R	5.6K	J	1/10W	
R63			RK73GB2A103J	CHIP R	10K	J	1/10W	
R65			RK73GB2A103J	CHIP R	10K	J	1/10W	
R68			RK73GB2A102J	CHIP R	1.0K	J	1/10W	
R71,72			RK73GB2A473J	CHIP R	47K	J	1/10W	
R73			RK73GB2A104J	CHIP R	100K	J	1/10W	

E : Europe **K** : North America **M** : Other Areas **W** : Without Europe

⚠ Indicates safety critical components.

PARTS LIST

SYNTHESIZER UNIT (X14-9490-10)

Ref. No.	Add	New	Parts No.	Description				Destination
R74			RK73GB2A473J	CHIP R	47K	J	1/10W	
R78			RK73GB2A473J	CHIP R	47K	J	1/10W	
R110			RK73GB2A104J	CHIP R	100K	J	1/10W	
R119-121			RK73GB2A104J	CHIP R	100K	J	1/10W	
R123			RK73GB2A473J	CHIP R	47K	J	1/10W	
R124			RK73GB2A123J	CHIP R	12K	J	1/10W	
R125			RK73GB2A101J	CHIP R	100	J	1/10W	
R126			RK73GB2A152J	CHIP R	1.5K	J	1/10W	
R127			RK73GB2A104J	CHIP R	100K	J	1/10W	
R129			RK73GB2A104J	CHIP R	100K	J	1/10W	
R130			RK73GB2A101J	CHIP R	100	J	1/10W	
R131,132			RK73GB2A223J	CHIP R	22K	J	1/10W	
R133			RK73GB2A102J	CHIP R	1.0K	J	1/10W	
R134			RK73GB2A471J	CHIP R	470	J	1/10W	
R135			RK73GB2A473J	CHIP R	47K	J	1/10W	
R136			RK73GB2A471J	CHIP R	470	J	1/10W	
R137-139			RK73GB2A102J	CHIP R	1.0K	J	1/10W	
R140-144			RK73GB2A471J	CHIP R	470	J	1/10W	
R146,147			RK73GB2A471J	CHIP R	470	J	1/10W	
R148,149			RK73GB2A102J	CHIP R	1.0K	J	1/10W	
R150			RK73GB2A103J	CHIP R	10K	J	1/10W	
R152			RK73GB2A471J	CHIP R	470	J	1/10W	
R153			RK73GB2A101J	CHIP R	100	J	1/10W	
R154			RK73GB2A103J	CHIP R	10K	J	1/10W	
R155,156			RK73GB2A102J	CHIP R	1.0K	J	1/10W	
R157			RK73GB2A101J	CHIP R	100	J	1/10W	
R158			RK73GB2A102J	CHIP R	1.0K	J	1/10W	
R161			RK73GB2A104J	CHIP R	100K	J	1/10W	
R162			RK73GB2A473J	CHIP R	47K	J	1/10W	
R164-166			RK73GB2A104J	CHIP R	100K	J	1/10W	
R167			RK73GB2A473J	CHIP R	47K	J	1/10W	
R169			RK73GB2A104J	CHIP R	100K	J	1/10W	
R171,172			RK73GB2A104J	CHIP R	100K	J	1/10W	
R180,181			RK73GB2A121J	CHIP R	120	J	1/10W	
R183-186			RK73GB2A102J	CHIP R	1.0K	J	1/10W	
R187			RK73GB2A103J	CHIP R	10K	J	1/10W	
R188-190			RK73GB2A471J	CHIP R	470	J	1/10W	
R191-195			RK73GB2A102J	CHIP R	1.0K	J	1/10W	
R200			RK73GB2A473J	CHIP R	47K	J	1/10W	
R203			RK73GB2A102J	CHIP R	1.0K	J	1/10W	
R204			RK73GB2A104J	CHIP R	100K	J	1/10W	
R205			RK73GB2A101J	CHIP R	100	J	1/10W	
R206			RK73GB2A222J	CHIP R	2.2K	J	1/10W	
R207,208			RK73GB2A102J	CHIP R	1.0K	J	1/10W	
R209,210			RK73GB2A104J	CHIP R	100K	J	1/10W	
R213,214			RK73GB2A102J	CHIP R	1.0K	J	1/10W	
R215			RK73GB2A104J	CHIP R	100K	J	1/10W	
R216			RK73GB2A103J	CHIP R	10K	J	1/10W	
R217,218			RK73GB2A104J	CHIP R	100K	J	1/10W	
R220			RK73GB2A181J	CHIP R	180	J	1/10W	
R222			RK73GB2A101J	CHIP R	100	J	1/10W	
R227			RK73GB2A101J	CHIP R	100	J	1/10W	
R230			RK73GB2A182J	CHIP R	1.8K	J	1/10W	
R231			RK73GB2A222J	CHIP R	2.2K	J	1/10W	
R232			RK73GB2A102J	CHIP R	1.0K	J	1/10W	

Ref. No.	Add	New	Parts No.	Description				Destination
R241			RK73GB2A561J	CHIP R	560	J	1/10W	
R245			RK73GB2A472J	CHIP R	4.7K	J	1/10W	
R247			RK73GB2A473J	CHIP R	47K	J	1/10W	
R254			RK73GB2A102J	CHIP R	1.0K	J	1/10W	
R260			RK73GB2A102J	CHIP R	1.0K	J	1/10W	
R264			RK73GB2A473J	CHIP R	47K	J	1/10W	
R265-267			RK73EB2E473J	CHIP R	47K	J	1/4W	
R268			RK73GH2A223D	CHIP R	22K	D	1/10W	
R269			RK73GB2A103J	CHIP R	10K	J	1/10W	
R270			RK73GB2A223J	CHIP R	22K	J	1/10W	
R271			RK73GH2A472D	CHIP R	4.7K	D	1/10W	
R272			RK73GB2A102J	CHIP R	1.0K	J	1/10W	
R273			RK73EH2E223D	CHIP R	22K	D	1/4W	
R274			RK73GB2A103J	CHIP R	10K	J	1/10W	
R275			RK73GB2A224J	CHIP R	220K	J	1/10W	
R276			RK73GB2A222J	CHIP R	2.2K	J	1/10W	
R277			RK73GB2A101J	CHIP R	100	J	1/10W	
R278			RK73GB2A103J	CHIP R	10K	J	1/10W	
R279			RK73GB2A104J	CHIP R	100K	J	1/10W	
R284			RK73GB2A104J	CHIP R	100K	J	1/10W	
R286			RK73GB2A334J	CHIP R	330K	J	1/10W	
R287			RK73GB2A104J	CHIP R	100K	J	1/10W	
R288			RK73EB2E220J	CHIP R	22	J	1/4W	
R289			RK73GB2A224J	CHIP R	220K	J	1/10W	
R290-293			RK73GB2A472J	CHIP R	4.7K	J	1/10W	
R294			R92-3352-05	CHIP R	0.47	J	1/2W	
R295			RK73GB2A103J	CHIP R	10K	J	1/10W	
R296,297			RK73GB2A104J	CHIP R	100K	J	1/10W	
R298			RK73GB2A473J	CHIP R	47K	J	1/10W	
R299			RK73GH2A104D	CHIP R	100K	D	1/10W	
R300			RK73GH2A563D	CHIP R	56K	D	1/10W	
R301			RK73GH2A333D	CHIP R	33K	D	1/10W	
R302			RK73GH2A683D	CHIP R	68K	D	1/10W	
R303			RK73GB2A471J	CHIP R	470	J	1/10W	
R304			RK73GB2A473J	CHIP R	47K	J	1/10W	
R305			RK73GB2A184J	CHIP R	180K	J	1/10W	
R306-309			RK73GH2A333D	CHIP R	33K	D	1/10W	
R310			RK73GB2A102J	CHIP R	1.0K	J	1/10W	
R311			RK73GB2A682J	CHIP R	6.8K	J	1/10W	
R312			RK73GB2A103J	CHIP R	10K	J	1/10W	
R313			RK73GB2A473J	CHIP R	47K	J	1/10W	
R314			RK73GB2A103J	CHIP R	10K	J	1/10W	
R316			RK73GB2A104J	CHIP R	100K	J	1/10W	
R317			RK73GB2A102J	CHIP R	1.0K	J	1/10W	
R318,319			RK73GB2A103J	CHIP R	10K	J	1/10W	
R320			RK73GB2A334J	CHIP R	330K	J	1/10W	
R321,322			RK73GB2A102J	CHIP R	1.0K	J	1/10W	
R323			RK73EB2E222J	CHIP R	2.2K	J	1/4W	
R324			RK73GB2A222J	CHIP R	2.2K	J	1/10W	
R325			RK73GB2A102J	CHIP R	1.0K	J	1/10W	
R326			RK73GB2A221J	CHIP R	220	J	1/10W	
R327			RK73GB2A224J	CHIP R	220K	J	1/10W	
R328			RK73GH2A104D	CHIP R	100K	D	1/10W	
R329			RK73EB2E100J	CHIP R	10	J	1/4W	
R330			RK73EB2E222J	CHIP R	2.2K	J	1/4W	

E : Europe **K** : North America **M** : Other Areas **W** : Without Europe

⚠ Indicates safety critical components.

PARTS LIST

SYNTHESIZER UNIT (X14-9490-10)

Ref. No.	Add	New	Parts No.	Description				Destination
R331			RK73GB2A221J	CHIP R	220	J	1/10W	
R332			RK73GH2A223D	CHIP R	22K	D	1/10W	
R333,334			RK73GB2A562J	CHIP R	5.6K	J	1/10W	
R335			RK73GB2A222J	CHIP R	2.2K	J	1/10W	
R336			R92-3099-05	CHIP R	0.22	J	1/2W	
R337			RK73GB2A104J	CHIP R	100K	J	1/10W	
R338			RK73GB2A103J	CHIP R	10K	J	1/10W	
R339			RK73GB2A223J	CHIP R	22K	J	1/10W	
R340			RK73GB2A473J	CHIP R	47K	J	1/10W	
R341			RK73GB2A474J	CHIP R	470K	J	1/10W	
R342			RK73GH2A333D	CHIP R	33K	D	1/10W	
R343			RK73EB2E152J	CHIP R	1.5K	J	1/4W	
R344			RK73GB2A101J	CHIP R	100	J	1/10W	
R345			RK73GH2A103D	CHIP R	10K	D	1/10W	
R346			RK73GB2A224J	CHIP R	220K	J	1/10W	
R347			RK73GB2A104J	CHIP R	100K	J	1/10W	
R348			RK73GB2A223J	CHIP R	22K	J	1/10W	
R351			RK73GB2A223J	CHIP R	22K	J	1/10W	
R356			RK73GB2A472J	CHIP R	4.7K	J	1/10W	
R358			RK73GB2A223J	CHIP R	22K	J	1/10W	
R359			RK73GB2A472J	CHIP R	4.7K	J	1/10W	
R362			RK73GB2A104J	CHIP R	100K	J	1/10W	
R368			RK73GB2A473J	CHIP R	47K	J	1/10W	
R370,371			RK73GB2A473J	CHIP R	47K	J	1/10W	
R373			RK73GB2A102J	CHIP R	1.0K	J	1/10W	
R376			RK73GB2A104J	CHIP R	100K	J	1/10W	
R377,378			RK73GB2A473J	CHIP R	47K	J	1/10W	
R394			RK73GB2A104J	CHIP R	100K	J	1/10W	
R395,396			RK73GB2A224J	CHIP R	220K	J	1/10W	
R397			RK73GB2A104J	CHIP R	100K	J	1/10W	
R400			RK73EB2E220J	CHIP R	22	J	1/4W	
R401			RK73EB2E100J	CHIP R	10	J	1/4W	
R408			RK73GB2A471J	CHIP R	470	J	1/10W	
R411,412			RK73GB2A122J	CHIP R	1.2K	J	1/10W	
R418-420			RK73GB2A102J	CHIP R	1.0K	J	1/10W	
R421,422			RK73GB2A101J	CHIP R	100	J	1/10W	
R423,424			RK73GB2A102J	CHIP R	1.0K	J	1/10W	
R426-428			RK73GB2A102J	CHIP R	1.0K	J	1/10W	
R429,430			RK73GB2A471J	CHIP R	470	J	1/10W	
R432			RK73GB2A102J	CHIP R	1.0K	J	1/10W	
R434-443			RK73GB2A102J	CHIP R	1.0K	J	1/10W	
R445			RK73GB2A102J	CHIP R	1.0K	J	1/10W	
R446			RK73GB2A222J	CHIP R	2.2K	J	1/10W	
R447,448			RK73GB2A102J	CHIP R	1.0K	J	1/10W	
R450			RK73GB2A102J	CHIP R	1.0K	J	1/10W	
R455			RK73GB2A102J	CHIP R	1.0K	J	1/10W	
R456-458			RK73GB2A471J	CHIP R	470	J	1/10W	
R459			RK73GB2A152J	CHIP R	1.5K	J	1/10W	
R460-462			RK73GB2A102J	CHIP R	1.0K	J	1/10W	
R465			RK73GB2A471J	CHIP R	470	J	1/10W	
R466			RK73GB2A223J	CHIP R	22K	J	1/10W	
R467			RK73GB2A103J	CHIP R	10K	J	1/10W	
R700-702			RK73GB2A223J	CHIP R	22K	J	1/10W	
R703			RK73GB2A123J	CHIP R	12K	J	1/10W	
R800,801			RK73EB2E750J	CHIP R	75	J	1/4W	

Ref. No.	Add	New	Parts No.	Description				Destination
R802-804			RK73EB2E102J	CHIP R	1.0K	J	1/4W	
R805,806			RK73EB2E332J	CHIP R	3.3K	J	1/4W	
R807			RK73EB2E102J	CHIP R	1.0K	J	1/4W	
R808			RK73EB2E750J	CHIP R	75	J	1/4W	
R809,810			RK73EB2E101J	CHIP R	100	J	1/4W	
R811			RK73EB2E750J	CHIP R	75	J	1/4W	
R812,813			RK73EB2E102J	CHIP R	1.0K	J	1/4W	
R814			RK73EB2E121J	CHIP R	120	J	1/4W	
R818			RK73EB2E750J	CHIP R	75	J	1/4W	
R821,822			RK73EB2E102J	CHIP R	1.0K	J	1/4W	
R823,824			RK73EB2E222J	CHIP R	2.2K	J	1/4W	
R825			RK73EB2E103J	CHIP R	10K	J	1/4W	
R826			RK73EB2E102J	CHIP R	1.0K	J	1/4W	
R827			RK73EB2E750J	CHIP R	75	J	1/4W	
R830,831			RK73EB2E332J	CHIP R	3.3K	J	1/4W	
R832-834			RK73EB2E102J	CHIP R	1.0K	J	1/4W	
R835,836			RK73GB2A223J	CHIP R	22K	J	1/10W	
R837			RK73EB2E222J	CHIP R	2.2K	J	1/4W	
R838			RK73GB2A123J	CHIP R	12K	J	1/10W	
R839			RK73GB2A103J	CHIP R	10K	J	1/10W	
R840			RK73GB2A822J	CHIP R	8.2K	J	1/10W	
R841			RK73GB2A223J	CHIP R	22K	J	1/10W	
R843			RK73GB2A472J	CHIP R	4.7K	J	1/10W	
R844			RK73GB2A223J	CHIP R	22K	J	1/10W	
R845			RK73GB2A102J	CHIP R	1.0K	J	1/10W	
R846			RK73GB2A103J	CHIP R	10K	J	1/10W	
R847-849			RK73GB2A223J	CHIP R	22K	J	1/10W	
R850			RK73GB2A103J	CHIP R	10K	J	1/10W	
R851			RK73GB2A472J	CHIP R	4.7K	J	1/10W	
R852			RK73GB2A473J	CHIP R	47K	J	1/10W	
R853			RK73EB2E102J	CHIP R	1.0K	J	1/4W	
R855			RK73EB2E331J	CHIP R	330	J	1/4W	
R857			RK73EB2E331J	CHIP R	330	J	1/4W	
R858			RK73EB2E102J	CHIP R	1.0K	J	1/4W	
R865,866			RK73GB2A224J	CHIP R	220K	J	1/10W	
R877			RK73EB2E220J	CHIP R	22	J	1/4W	
R892			RK73EB2E224J	CHIP R	220K	J	1/4W	
R893			RK73EB2E332J	CHIP R	3.3K	J	1/4W	
R894,895			RK73EB2E222J	CHIP R	2.2K	J	1/4W	
R896			R92-3409-05	CHIP R	6.8	F	1/4W	
R897			RK73EB2E222J	CHIP R	2.2K	J	1/4W	
R898			RK73GB2A103J	CHIP R	10K	J	1/10W	
R899,900			RK73GB2A223J	CHIP R	22K	J	1/10W	
R901			RK73EB2E750J	CHIP R	75	J	1/4W	
R903			RK73EB2E102J	CHIP R	1.0K	J	1/4W	
W4			R92-1252-05	CHIP R	0 OHM	J	1/16W	
W290			R92-1252-05	CHIP R	0 OHM	J	1/16W	
W800			R92-1252-05	CHIP R	0 OHM	J	1/16W	
D1			MA3056-M	ZENER DIODE				
D2			MA143	DIODE				
D5			MA143	DIODE				
D7			DAN202U	DIODE				
D9			1SR154-400	DIODE				
D10			HZS6B1L	ZENER DIODE				

E : Europe **K** : North America **M** : Other Areas **W** : Without Europe

⚠ Indicates safety critical components.

PARTS LIST

SYNTHESIZER UNIT (X14-9490-10)

Ref. No.	Add	New	Parts No.	Description	Destination
D11			MA3047-H	ZENER DIODE	
D12			HZS161L	ZENER DIODE	
D13			HZM16N(B2)	ZENER DIODE	
D14			MA143	DIODE	
D15			DAP202U	DIODE	
D16			1SS184	DIODE	
D17			EC31QS06TE12L	DIODE	
D18,19			1SR154-400	DIODE	
D20			MA143	DIODE	
D21			1SS184	DIODE	
D22,23			HZM16N(B2)	ZENER DIODE	
D24			1SS184	DIODE	
D25			EC31QS06TE12L	DIODE	
D26			HZM13N(B1)	ZENER DIODE	
D27			HZS6B1L	ZENER DIODE	
D28			DAN202U	DIODE	
D30			HZS11B2L	ZENER DIODE	
D31			1SS184	DIODE	
D32			MA3047-H	ZENER DIODE	
D35			DAN202U	DIODE	
D701,702			MA3220-H	ZENER DIODE	
D800-804			MA3220-H	ZENER DIODE	
D805			MAZK270D	ZENER DIODE	
D806			UDZS6.2B	ZENER DIODE	
D807			DAN202U	DIODE	
D810			DAN202U	DIODE	
D811,812			HZS6B1L	ZENER DIODE	
D814,815			UDZS6.2B	ZENER DIODE	
D816			MA143	DIODE	
D817			AM01ZNF	DIODE	
D818			DE5LC20U	DIODE	
D819			MA143	DIODE	
D820			U5ZA27C(TE24L)	DIODE	
D821			MA143	DIODE	
D822			MA3220-H	ZENER DIODE	
D823			UDZS6.2B	ZENER DIODE	
D824			DAN202U	DIODE	
D825			HZS7C2L	ZENER DIODE	
D827-829			MA143	DIODE	
D830-833			UDZS6.2B	ZENER DIODE	
D834			MA3220-H	ZENER DIODE	
D835-837			MA143	DIODE	
D839			DAN202U	DIODE	
D900			DAN202U	DIODE	
D901			UDZS6.2B	ZENER DIODE	
IC1			S-80943CNMC	ANALOGUE IC	
IC7			S-24CS08AFJ-TB	ROM IC	
IC8			TJA1054	MOS-IC	
IC9			S-80943CNMC	ANALOGUE IC	
IC10			NJM4565MD-ZB	ANALOGUE IC	
IC16			TC7WH126FU	MOS-IC	
IC17			HA12187FP	ANALOGUE IC	
IC18			S-816A50AMC-T2	ANALOGUE IC	
IC20			BA9743AFV	ANALOGUE IC	
IC21			S-80925CNMC	ANALOGUE IC	

Ref. No.	Add	New	Parts No.	Description	Destination
IC22		✻	M30835FJGP9R4	MICROCONTROLLER IC	
IC23			TC7WHU04FU	MOS-IC	
IC800			TDA8579T-T	ANALOGUE IC	
Q1,2			DTA124EUA	DIGITAL TRANSISTOR	
Q4			2SC4081	TRANSISTOR	
Q5			DTC124EUA	DIGITAL TRANSISTOR	
Q6			DTA124EUA	DIGITAL TRANSISTOR	
Q8-11			DTC124EUA	DIGITAL TRANSISTOR	
Q12			DTC144EUA	DIGITAL TRANSISTOR	
Q14			2SC4081	TRANSISTOR	
Q15			DTA144EUA	DIGITAL TRANSISTOR	
Q17			2SD2114K	TRANSISTOR	
Q18			DTA144EUA	DIGITAL TRANSISTOR	
Q24			2SC4081	TRANSISTOR	
Q26			DTC124EUA	DIGITAL TRANSISTOR	
Q27			2SB1203-FA	TRANSISTOR	
Q28			2SA1576A	TRANSISTOR	
Q29			2SC4081	TRANSISTOR	
Q30			2SB1203-FA	TRANSISTOR	
Q31			FMY6	TRANSISTOR	
Q32			2SC4081	TRANSISTOR	
Q33,34			2SA1576A	TRANSISTOR	
Q35			DTC144EUA	DIGITAL TRANSISTOR	
Q36			DTA144EUA	DIGITAL TRANSISTOR	
Q37			2SC4081	TRANSISTOR	
Q38			IMT1A	TRANSISTOR	
Q39			DTA144EUA	DIGITAL TRANSISTOR	
Q40			FMY6	TRANSISTOR	
Q41			DTA144EUA	DIGITAL TRANSISTOR	
Q42			2SJ327Z	FET	
Q43			FMY6	TRANSISTOR	
Q44			2SC4081	TRANSISTOR	
Q46			2SB1188(Q,R)	TRANSISTOR	
Q47			FMY6	TRANSISTOR	
Q48			IMT1A	TRANSISTOR	
Q49			2SJ327Z	FET	
Q50			DTA124EUA	DIGITAL TRANSISTOR	
Q53			DTC144EUA	DIGITAL TRANSISTOR	
Q55,56			DTC124EUA	DIGITAL TRANSISTOR	
Q57			2SA1576A	TRANSISTOR	
Q58			DTC124EUA	DIGITAL TRANSISTOR	
Q61			DTC144EUA	DIGITAL TRANSISTOR	
Q62			DTC124EUA	DIGITAL TRANSISTOR	
Q64			2SA1576A	TRANSISTOR	
Q66,67			DTA144EUA	DIGITAL TRANSISTOR	
Q68,69			DTC144EUA	DIGITAL TRANSISTOR	
Q70			2SC4081	TRANSISTOR	
Q71			2SB1188(Q,R)	TRANSISTOR	
Q72			2SA1576A	TRANSISTOR	
Q73			2SC4081	TRANSISTOR	
Q74			DTA124EUA	DIGITAL TRANSISTOR	
Q700,701			2SC4081	TRANSISTOR	
Q702			DTA124EUA	DIGITAL TRANSISTOR	
Q800,801			UNR511H	TRANSISTOR	
Q802			DTC124EUA	DIGITAL TRANSISTOR	

E : Europe **K** : North America **M** : Other Areas **W** : Without Europe

⚠ Indicates safety critical components.

PARTS LIST

SYNTHESIZER UNIT (X14-9490-10)

Ref. No.	Add	New	Parts No.	Description	Destination
Q803-806			2SC4081	TRANSISTOR	
Q807			DTA143EUA	DIGITAL TRANSISTOR	
Q808			2SC4081	TRANSISTOR	
Q809			DTA124EUA	DIGITAL TRANSISTOR	
Q810			2SB1203-FA	TRANSISTOR	
Q811			2SC4081	TRANSISTOR	
TH800			NTSA0WF104FN6A	THERMISTOR	
ELECTRIC UNIT (X25-9410-11)					
C1-3			CK73GB1C104K	CHIP C 0.10UF K	
C5			CK73GB1H104K	CHIP C 0.10UF K	
C6			CK73GB1H103K	CHIP C 0.010UF K	
C7			CK73GB1C104K	CHIP C 0.10UF K	
C8			CK73GB1H104K	CHIP C 0.10UF K	
C9			CK73GB1C104K	CHIP C 0.10UF K	
C11			CK73GB1H104K	CHIP C 0.10UF K	
C12,13			CK73GB1H103K	CHIP C 0.010UF K	
C14,15			CK73GB1C104K	CHIP C 0.10UF K	
C16			CC73GCH1H471J	CHIP C 470PF J	
C17-22			CK73GB1C104K	CHIP C 0.10UF K	
C23			CK73GB1H103K	CHIP C 0.010UF K	
C24-26			CK73EB0J106K	CHIP C 10UF K	
C27			CK73GB1H104K	CHIP C 0.10UF K	
C28			CK73GB1C104K	CHIP C 0.10UF K	
C29			CK73GB1H103K	CHIP C 0.010UF K	
C30			CK73EB0J106K	CHIP C 10UF K	
C31-33			CK73GB1H103K	CHIP C 0.010UF K	
C34			CK73EB0J106K	CHIP C 10UF K	
C37			CK73GB1H103K	CHIP C 0.010UF K	
C38			CK73EB0J106K	CHIP C 10UF K	
C39			CK73GB1H103K	CHIP C 0.010UF K	
C40,41			CK73GB1C104K	CHIP C 0.10UF K	
C42			CK73EB0J106K	CHIP C 10UF K	
C43			CK73GB1H103K	CHIP C 0.010UF K	
C44,45			CK73GB1C104K	CHIP C 0.10UF K	
C49-52			CK73GB1C104K	CHIP C 0.10UF K	
C53,54			CC73GCH1H180J	CHIP C 18PF J	
C57			CK73GB1H103K	CHIP C 0.010UF K	
C58			CC73GCH1H471J	CHIP C 470PF J	
C59,60			CK73GB1H103K	CHIP C 0.010UF K	
C61			CK73EB0J106K	CHIP C 10UF K	
C62			CK73GB1C104K	CHIP C 0.10UF K	
C63			CK73GB1H103K	CHIP C 0.010UF K	
C67			CK73GB1H104K	CHIP C 0.10UF K	
C74			CK73GB1H103K	CHIP C 0.010UF K	
C76			CK73GB1H103K	CHIP C 0.010UF K	
C77,78			CK73EB0J106K	CHIP C 10UF K	
C79			CK73EB1A106K	CHIP C 10UF K	
C80			CK73EB0J106K	CHIP C 10UF K	
C81-85			CK73GB1C104K	CHIP C 0.10UF K	
C86-102			CC73GCH1H510J	CHIP C 51PF J	
C103,104			CC73GCH1H330J	CHIP C 33PF J	
C105-107			CC73GCH1H510J	CHIP C 51PF J	
C109			CK73GB1C104K	CHIP C 0.10UF K	
C110-113			CC73GCH1H510J	CHIP C 51PF J	

Ref. No.	Add	New	Parts No.	Description	Destination
C125-133			CC73GCH1H330J	CHIP C 33PF J	
C136-141			CC73GCH1H330J	CHIP C 33PF J	
C148,149			CC73GCH1H330J	CHIP C 33PF J	
C177,178			CK73GB1C104K	CHIP C 0.10UF K	
C180			CK73GB1H103K	CHIP C 0.010UF K	
C183-190			CK73GB1H104K	CHIP C 0.10UF K	
C192,193			CK73GB1H104K	CHIP C 0.10UF K	
C194			CC73GCH1H331J	CHIP C 330PF J	
C201			CK73GB1H103K	CHIP C 0.010UF K	
C209			CC73GCH1H330J	CHIP C 33PF J	
C211			CK73GB1H103K	CHIP C 0.010UF K	
C213			CK73GB1A474K	CHIP C 0.47UF K	
C216-218			CK73EB0J106K	CHIP C 10UF K	
CN30			E41-0234-05	SOCKET FOR PIN ASSY	
CN32			E40-9706-05	PIN ASSY	
L1-3			L40-1001-78	SMALL FIXED INDUCTOR (10UH)	
L4			L33-1998-05	SMALL FIXED INDUCTOR (10UH)	
L5			L40-1092-78	SMALL FIXED INDUCTOR (1UH)	
L6,7			L40-1001-78	SMALL FIXED INDUCTOR (10UH)	
L9			L40-1001-78	SMALL FIXED INDUCTOR (10UH)	
L12,13			L41-6805-33	SMALL FIXED INDUCTOR (68UH)	
X1			L77-2770-05	CRYSTAL RESONATOR (7.08MHZ)	
CP1-8			R90-1014-05	MULTI-COMP 100 X4	
CP17-22			R90-1014-05	MULTI-COMP 100 X4	
CP23			R90-1019-05	MULTI-COMP 100 X2	
CP24			R90-0714-05	MULTI-COMP 10K X4	
CP25			R90-0726-05	MULTI-COMP 10K X2	
CP26			R90-1014-05	MULTI-COMP 100 X4	
CP27			R90-1019-05	MULTI-COMP 100 X2	
CP28-35			R90-1014-05	MULTI-COMP 100 X4	
CP36			R90-1019-05	MULTI-COMP 100 X2	
CP37-40			R90-1014-05	MULTI-COMP 100 X4	
R1,2			RK73EB2E471J	CHIP R 470 J 1/4W	
R3			RK73GB2A103J	CHIP R 10K J 1/10W	
R5			RK73GB2A271J	CHIP R 270 J 1/10W	
R6			RK73GH2A301D	CHIP R 300 D 1/10W	
R7			RK73GB2A271J	CHIP R 270 J 1/10W	
R8			RK73GB2A102J	CHIP R 1.0K J 1/10W	
R12-16			RK73GB2A473J	CHIP R 47K J 1/10W	
R20			RK73GB2A271J	CHIP R 270 J 1/10W	
R23			RK73GB2A222J	CHIP R 2.2K J 1/10W	
R26-28			RK73GB2A101J	CHIP R 100 J 1/10W	
R29			RK73GB2A302J	CHIP R 3.0K J 1/10W	
R30,31			RK73GB2A101J	CHIP R 100 J 1/10W	
R40			RK73GB2A622J	CHIP R 6.2K J 1/10W	
R41-45			RK73GB2A103J	CHIP R 10K J 1/10W	
R46-48			RK73GB2A101J	CHIP R 100 J 1/10W	
R56			RK73GB2A104J	CHIP R 100K J 1/10W	
R58			RK73GB2A473J	CHIP R 47K J 1/10W	
R59			RK73GB2A104J	CHIP R 100K J 1/10W	
R76-80			RK73GB2A101J	CHIP R 100 J 1/10W	
R81			RK73GB2A102J	CHIP R 1.0K J 1/10W	
R83			RK73GB2A102J	CHIP R 1.0K J 1/10W	

E : Europe **K** : North America **M** : Other Areas **W** : Without Europe

⚠ Indicates safety critical components.

PARTS LIST

ELECTRIC UNIT (X25-9410-11)

Ref. No.	Add	New	Parts No.	Description			Destination
R85			RK73GB2A103J	CHIP R	10K	J 1/10W	
R87			RK73GB2A103J	CHIP R	10K	J 1/10W	
R88			RK73GB2A102J	CHIP R	1.0K	J 1/10W	
R90-92			RK73GB2A102J	CHIP R	1.0K	J 1/10W	
R93-95			RK73GB2A101J	CHIP R	100	J 1/10W	
R96			RK73GB2A471J	CHIP R	470	J 1/10W	
R97			RK73GB2A101J	CHIP R	100	J 1/10W	
R98			RK73GB2A471J	CHIP R	470	J 1/10W	
R99			RK73GB2A101J	CHIP R	100	J 1/10W	
R100			RK73GB2A103J	CHIP R	10K	J 1/10W	
R101			RK73GB2A471J	CHIP R	470	J 1/10W	
R102			RK73GB2A103J	CHIP R	10K	J 1/10W	
R103			RK73GB2A101J	CHIP R	100	J 1/10W	
R110			RK73GB2A101J	CHIP R	100	J 1/10W	
R113			RK73GB2A101J	CHIP R	100	J 1/10W	
R114			RK73GB2A102J	CHIP R	1.0K	J 1/10W	
R115			RK73GB2A101J	CHIP R	100	J 1/10W	
R116			RK73GB2A102J	CHIP R	1.0K	J 1/10W	
R117			RK73GB2A104J	CHIP R	100K	J 1/10W	
R118			RK73GB2A103J	CHIP R	10K	J 1/10W	
R119			RK73GB2A104J	CHIP R	100K	J 1/10W	
R120-122			RK73GB2A103J	CHIP R	10K	J 1/10W	
R123			RK73GB2A104J	CHIP R	100K	J 1/10W	
R125-127			RK73GB2A101J	CHIP R	100	J 1/10W	
R144			RK73GB2A104J	CHIP R	100K	J 1/10W	
R145			RK73GB2A103J	CHIP R	10K	J 1/10W	
R148			RK73GB2A302J	CHIP R	3.0K	J 1/10W	
R151			RK73GB2A201J	CHIP R	200	J 1/10W	
R156,157			RK73GB2A333J	CHIP R	33K	J 1/10W	
R166			RK73GB2A103J	CHIP R	10K	J 1/10W	
R168-171			RK73GB2A100J	CHIP R	10	J 1/10W	
R172			RK73GB2A103J	CHIP R	10K	J 1/10W	
R173			RK73GB2A473J	CHIP R	47K	J 1/10W	
R233			RK73GB2A242J	CHIP R	2.4K	J 1/10W	
R256-258			RK73GB2A103J	CHIP R	10K	J 1/10W	
R271-273			RK73GB2A103J	CHIP R	10K	J 1/10W	
R276,277			RK73GB2A101J	CHIP R	100	J 1/10W	
R279,280			RK73GB2A104J	CHIP R	100K	J 1/10W	
R286,287			RK73GB2A103J	CHIP R	10K	J 1/10W	
R295			RK73GB2A104J	CHIP R	100K	J 1/10W	
R296,297			RK73EB2E471J	CHIP R	470	J 1/4W	
R298			RK73GB2A331J	CHIP R	330	J 1/10W	
R300-304			RK73GB2A101J	CHIP R	100	J 1/10W	
R305			RK73GB2A100J	CHIP R	10	J 1/10W	
R308			RK73GB2A471J	CHIP R	470	J 1/10W	
R309-311			RK73GB2A103J	CHIP R	10K	J 1/10W	
W234			R92-1252-05	CHIP R	0 OHM	J 1/16W	
W242			R92-1252-05	CHIP R	0 OHM	J 1/16W	
W246			R92-1252-05	CHIP R	0 OHM	J 1/16W	
D2			HZM6.8FA	ZENER DIODE			
D3			DAN202U	DIODE			
D4,5			DA204U	DIODE			
IC2			TC9246F	MOS-IC			
IC3			TC7SHU04F	MOS-IC			

Ref. No.	Add	New	Parts No.	Description			Destination
IC4			HD64412FI	MOS-IC			
IC5			MSM5118165FP60	DRAM IC			
IC6			BU3616K	MOS-IC			
IC7			TC7SHU04F	MOS-IC			
IC10			TC7SH32FU	MOS-IC			
IC11			MSM5118165FP60	DRAM IC			
IC12			HD6437041AG57E	MICROCONTROLLER IC			
IC19		✻	MBM29F160TE9R5	ROM IC			
IC20			TC7SHU04F	MOS-IC			
IC22			TC7SHU04F	MOS-IC			
IC23			TC7SET08FU	MOS-IC			
IC26			TA78DS05F	ANALOGUE IC			
IC27			TC7SHU04F	MOS-IC			
Q2,3			DTC124EUA	DIGITAL TRANSISTOR			
Q4,5			DTA124EUA	DIGITAL TRANSISTOR			
A1			W02-3152-05	OSCILLATING MODULE			

VIDEO UNIT (X35-4252-71)

C1			C92-1486-05	ELECTRO	100UF	25WV	
C2			CK73GB1H103K	CHIP C	0.010UF	K	
C31			C92-1486-05	ELECTRO	100UF	25WV	
C32			CK73GB1H103K	CHIP C	0.010UF	K	
C33			CC73GCH1H101J	CHIP C	100PF	J	
C34			CK73FB1C105K	CHIP C	1.0UF	K	
C35			C93-1222-05	CERAMIC	0.22UF	J	
C37			C93-1127-05	PPS-C	0.10UF	J	
C38,39			C93-1289-05	CERAMIC	10UF	Z	
C40			C92-1610-05	ELECTRO	220UF	16WV	
C41			C92-0671-05	ELECTRO	10UF	16WV	
C42			CK73GB1C104K	CHIP C	0.10UF	K	
C43,44			CK73FB1C154K	CHIP C	0.15UF	K	
C45,46			C92-1610-05	ELECTRO	220UF	16WV	
C47			C92-0671-05	ELECTRO	10UF	16WV	
C48			CK73GB1H103K	CHIP C	0.010UF	K	
C64			CK73GB1H103K	CHIP C	0.010UF	K	
C65			C92-0676-05	ELECTRO	10UF	25WV	
C66			CK73FB1C105K	CHIP C	1.0UF	K	
C67			CK73GB1H103K	CHIP C	0.010UF	K	
C68			C92-0676-05	ELECTRO	10UF	25WV	
C69			CK73FB1C105K	CHIP C	1.0UF	K	
C101			C92-0672-05	ELECTRO	22UF	16WV	
C102,103			CK73GB1H103K	CHIP C	0.010UF	K	
C104			CC73GCH1H561J	CHIP C	560PF	J	
C105,106			CK73GB1C104K	CHIP C	0.10UF	K	
C107			CK73GB1H103K	CHIP C	0.010UF	K	
C108			CC73GCH1H120J	CHIP C	12PF	J	
C109-112			CK73GB1H103K	CHIP C	0.010UF	K	
C113			CC73GCH1E102J	CHIP C	1000PF	J	
C114			CC73GCH1H101J	CHIP C	100PF	J	
C115,116			CK73GB1H103K	CHIP C	0.010UF	K	
C117			CC73GCH1H470J	CHIP C	47PF	J	
C118-120			CK73GB1H103K	CHIP C	0.010UF	K	
C123-125			CK73GB1H103K	CHIP C	0.010UF	K	
C200-202			C92-0671-05	ELECTRO	10UF	16WV	
C203			C92-1488-05	NP-ELECT	10UF	25WV	

E : Europe **K** : North America **M** : Other Areas **W** : Without Europe

⚠ Indicates safety critical components.

PARTS LIST

VIDEO UNIT (X35-4252-71)

Ref. No.	Add	New	Parts No.	Description			Destination
C204,205			C92-0671-05	ELECTRO	10UF	16WV	
C206			CK73FB1C105K	CHIP C	1.0UF	K	
C207			CC73GCH1H331J	CHIP C	330PF	J	
C208			CC73GCH1E102J	CHIP C	1000PF	J	
C209			CC73GCH1H151J	CHIP C	150PF	J	
C210			CK73GB1H472K	CHIP C	4700PF	K	
C211			CK73EB1A475K	CHIP C	4.7UF	K	
C212			CK73FB1C105K	CHIP C	1.0UF	K	
C214			C92-0687-05	ELECTRO	2.2UF	50WV	
C215,216			C92-0672-05	ELECTRO	22UF	16WV	
C217			C92-1610-05	ELECTRO	220UF	16WV	
C218-221			CK73GB1H103K	CHIP C	0.010UF	K	
C222			C92-0687-05	ELECTRO	2.2UF	50WV	
C225			CK73FB1C105K	CHIP C	1.0UF	K	
C226			CK73FB1C154K	CHIP C	0.15UF	K	
C227			CK73GB1H104K	CHIP C	0.10UF	K	
C228			CK73GB1H223K	CHIP C	0.022UF	K	
C229			CK73FB1C105K	CHIP C	1.0UF	K	
C230			CC73GCH1H080D	CHIP C	8.0PF	D	
C232			CK73GB1H103K	CHIP C	0.010UF	K	
C233			C92-0672-05	ELECTRO	22UF	16WV	
C234-239			C92-0675-05	ELECTRO	4.7UF	25WV	
C240			C92-0672-05	ELECTRO	22UF	16WV	
C241,242			CK73GB1H103K	CHIP C	0.010UF	K	
C243			C92-0672-05	ELECTRO	22UF	16WV	
C244-246			CK73FB1C105K	CHIP C	1.0UF	K	
C247-249			C92-0687-05	ELECTRO	2.2UF	50WV	
C250-252			CK73GB1H103K	CHIP C	0.010UF	K	
C253,254			C92-0671-05	ELECTRO	10UF	16WV	
C255			C92-0672-05	ELECTRO	22UF	16WV	
C256			CK73GB1H103K	CHIP C	0.010UF	K	
C259			C92-0672-05	ELECTRO	22UF	16WV	
C264			CK73GB1H223K	CHIP C	0.022UF	K	
C265			C92-0672-05	ELECTRO	22UF	16WV	
C266			CK73GB1H223K	CHIP C	0.022UF	K	
C267			CK73FB1C474K	CHIP C	0.47UF	K	
C268			CK73GB1H102K	CHIP C	1000PF	K	
C269			C92-0676-05	ELECTRO	10UF	25WV	
C270			C92-1821-05	ELECTRO	15UF	35WV	
C271			CK73GB1H103K	CHIP C	0.010UF	K	
C272			C92-0676-05	ELECTRO	10UF	25WV	
C273			CK73GB1H103K	CHIP C	0.010UF	K	
C274			C92-0676-05	ELECTRO	10UF	25WV	
C275			C92-0671-05	ELECTRO	10UF	16WV	
C276			CK73FB1C105K	CHIP C	1.0UF	K	
C277			C92-0687-05	ELECTRO	2.2UF	50WV	
C286			C92-1486-05	ELECTRO	100UF	25WV	
C287			C92-0676-05	ELECTRO	10UF	25WV	
C288			C92-1486-05	ELECTRO	100UF	25WV	
C289			CK73GB1H103K	CHIP C	0.010UF	K	
C290			CC73GCH1H390J	CHIP C	39PF	J	
C291			CC73GCH1H030C	CHIP C	3.0PF	C	
C292			CC73GCH1H330J	CHIP C	33PF	J	
C296-299			CC73GCH1H100D	CHIP C	10PF	D	
C306			CK73FB1C105K	CHIP C	1.0UF	K	

Ref. No.	Add	New	Parts No.	Description			Destination
C307-310			CK73GB1H102K	CHIP C	1000PF	K	
C313-318			CK73GB1H102K	CHIP C	1000PF	K	
C324,325			CK73GB1H102K	CHIP C	1000PF	K	
C328-342			CK73GB1H102K	CHIP C	1000PF	K	
C343			CC73GCH1H101J	CHIP C	100PF	J	
C344-350			CC73GCH1H121J	CHIP C	120PF	J	
C351,352			CC73GCH1H101J	CHIP C	100PF	J	
C353			CC73GCH1H331J	CHIP C	330PF	J	
C356			CC73GCH1H271J	CHIP C	270PF	J	
C357			CC73GCH1H331J	CHIP C	330PF	J	
C358			CC73GCH1H680J	CHIP C	68PF	J	
C359-361			CC73GCH1H331J	CHIP C	330PF	J	
C362			CC73GCH1H221J	CHIP C	220PF	J	
C501			CC73GCH1H100D	CHIP C	10PF	D	
C502			CC73GCH1H050C	CHIP C	5.0PF	C	
C503			CC73GCH1H220J	CHIP C	22PF	J	
C504			CC73GCH1H120J	CHIP C	12PF	J	
C505			CK73EB1E105K	CHIP C	1.0UF	K	
C506			C93-1290-05	CERAMIC	22UF	M	
C507			CK73EB1E105K	CHIP C	1.0UF	K	
C508			CC73GCH1H121J	CHIP C	120PF	J	
CN1			E41-0378-05	PIN ASSY			
CN2			E40-9781-05	FLAT CABLE CONNECTOR			
CN3			E41-0231-05	FLAT CABLE CONNECTOR			
CN4			E40-9484-05	PIN ASSY			
CN5			E40-9637-05	FLAT CABLE CONNECTOR			
F1			F53-0198-05	FUSE (1.5A)			
L31			L33-1177-05	CHOKE COIL			
L32			L33-1893-05	CHOKE COIL			
L34			L33-1166-05	CHOKE COIL			
L35,36			L19-0731-05	TRANSFORMER FOR CONVERTER			
L101			L41-2205-33	SMALL FIXED INDUCTOR (22UH)			
L102			L41-6895-33	SMALL FIXED INDUCTOR (6.8UH)			
L200-203			L41-1005-33	SMALL FIXED INDUCTOR (10UH)			
L205-209			L41-4705-33	SMALL FIXED INDUCTOR (47UH)			
L211-213			L41-1005-33	SMALL FIXED INDUCTOR (10UH)			
L215			L41-1005-33	SMALL FIXED INDUCTOR (10UH)			
L216			L41-4705-33	SMALL FIXED INDUCTOR (47UH)			
L501,502			L41-5685-33	SMALL FIXED INDUCTOR (0.56UH)			
X200			L78-0549-05	RESONATOR (15.734KHZ)			
X201			L77-2818-05	CRYSTAL RESONATOR (3.579545MHZ)			
R1			RK73GB2A103J	CHIP R	10K	J 1/10W	
R2			R92-0365-05	CHIP R	1.0K	J 1/2W	
R3			RK73GB2A222J	CHIP R	2.2K	J 1/10W	
R4			RK73GB2A103J	CHIP R	10K	J 1/10W	
R5			RK73EB2E392J	CHIP R	3.9K	J 1/4W	
R36			RK73GB2A393J	CHIP R	39K	J 1/10W	
R37			RK73GB2A104J	CHIP R	100K	J 1/10W	
R38			RK73GB2A102J	CHIP R	1.0K	J 1/10W	
R39			RK73GB2A390J	CHIP R	39	J 1/10W	
R40			RK73GB2A103J	CHIP R	10K	J 1/10W	
R41			RK73GB2A473J	CHIP R	47K	J 1/10W	
R42			RK73GB2A823J	CHIP R	82K	J 1/10W	

E : Europe **K** : North America **M** : Other Areas **W** : Without Europe

⚠ Indicates safety critical components.

PARTS LIST

VIDEO UNIT (X35-4252-71)

Ref. No.	Add	New	Parts No.	Description	Destination
R43			R92-3359-05	CHIP R 2.0 F 1/2W	
R44			R92-0365-05	CHIP R 1.0K J 1/2W	
R45			R92-3359-05	CHIP R 2.0 F 1/2W	
R46,47			RK73GB2A102J	CHIP R 1.0K J 1/10W	
R48			RK73GH2A912D	CHIP R 9.1K D 1/10W	
R49			RK73GH2A472D	CHIP R 4.7K D 1/10W	
R50			RK73GB2A103J	CHIP R 10K J 1/10W	
R51			RK73GB2A102J	CHIP R 1.0K J 1/10W	
R54,55			R92-3359-05	CHIP R 2.0 F 1/2W	
R56			RK73GB2A472J	CHIP R 4.7K J 1/10W	
R101,102			RK73GB2A683J	CHIP R 68K J 1/10W	
R103			RK73GB2A105J	CHIP R 1.0M J 1/10W	
R104			RK73GB2A472J	CHIP R 4.7K J 1/10W	
R105			RK73GB2A243J	CHIP R 24K J 1/10W	
R106			RK73GB2A153J	CHIP R 15K J 1/10W	
R107			RK73GB2A472J	CHIP R 4.7K J 1/10W	
R108			RK73GB2A473J	CHIP R 47K J 1/10W	
R109			RK73GB2A822J	CHIP R 8.2K J 1/10W	
R110			RK73GB2A272J	CHIP R 2.7K J 1/10W	
R111-114			RK73GB2A101J	CHIP R 100 J 1/10W	
R116,117			RK73GB2A472J	CHIP R 4.7K J 1/10W	
R119			RK73GB2A101J	CHIP R 100 J 1/10W	
R121			RK73GB2A472J	CHIP R 4.7K J 1/10W	
R122			RK73GB2A101J	CHIP R 100 J 1/10W	
R123			RK73GB2A272J	CHIP R 2.7K J 1/10W	
R124			RK73GB2A332J	CHIP R 3.3K J 1/10W	
R126			RK73GB2A472J	CHIP R 4.7K J 1/10W	
R127			RK73GB2A101J	CHIP R 100 J 1/10W	
R128			RK73GB2A331J	CHIP R 330 J 1/10W	
R130			RK73GB2A472J	CHIP R 4.7K J 1/10W	
R132			RK73GB2A472J	CHIP R 4.7K J 1/10W	
R133			RK73GB2A101J	CHIP R 100 J 1/10W	
R135			RK73GB2A472J	CHIP R 4.7K J 1/10W	
R136			RK73GB2A105J	CHIP R 1.0M J 1/10W	
R137			RK73GB2A101J	CHIP R 100 J 1/10W	
R139			RK73GB2A472J	CHIP R 4.7K J 1/10W	
R140			RK73GB2A561J	CHIP R 560 J 1/10W	
R141,142			RK73GB2A101J	CHIP R 100 J 1/10W	
R143			RK73GB2A561J	CHIP R 560 J 1/10W	
R148-153			RK73GB2A101J	CHIP R 100 J 1/10W	
R158			RK73GB2A472J	CHIP R 4.7K J 1/10W	
R160			RK73GB2A472J	CHIP R 4.7K J 1/10W	
R200			RK73GB2A361J	CHIP R 360 J 1/10W	
R201			RK73GB2A391J	CHIP R 390 J 1/10W	
R202			RK73GB2A182J	CHIP R 1.8K J 1/10W	
R203			RK73GB2A302J	CHIP R 3.0K J 1/10W	
R204			RK73GB2A102J	CHIP R 1.0K J 1/10W	
R205			RK73GB2A914J	CHIP R 910K J 1/10W	
R207			RK73GB2A512J	CHIP R 5.1K J 1/10W	
R208-211			RK73GB2A121J	CHIP R 120 J 1/10W	
R213-215			RK73GB2A101J	CHIP R 100 J 1/10W	
R216			RK73GB2A182J	CHIP R 1.8K J 1/10W	
R217			RK73GB2A272J	CHIP R 2.7K J 1/10W	
R219			RK73GB2A105J	CHIP R 1.0M J 1/10W	
R220			RK73GB2A332J	CHIP R 3.3K J 1/10W	

Ref. No.	Add	New	Parts No.	Description	Destination
R221			RK73GB2A103J	CHIP R 10K J 1/10W	
R222,223			RK73GB2A222J	CHIP R 2.2K J 1/10W	
R224,225			RK73EB2E220J	CHIP R 22 J 1/4W	
R228			RK73GB2A752J	CHIP R 7.5K J 1/10W	
R229			RK73GB2A272J	CHIP R 2.7K J 1/10W	
R231			RK73GB2A101J	CHIP R 100 J 1/10W	
R232-234			RK73EB2E101J	CHIP R 100 J 1/4W	
R235,236			RK73GB2A101J	CHIP R 100 J 1/10W	
R240-242			RK73EB2E101J	CHIP R 100 J 1/4W	
R246,247			RK73GB2A103J	CHIP R 10K J 1/10W	
R248			RK73GB2A102J	CHIP R 1.0K J 1/10W	
R250			RK73GB2A102J	CHIP R 1.0K J 1/10W	
R254-257			RK73GB2A103J	CHIP R 10K J 1/10W	
R263			R92-2018-05	CHIP R 560 J 1/2W	
R264			RK73GB2A103J	CHIP R 10K J 1/10W	
R265,266			RK73GB2A101J	CHIP R 100 J 1/10W	
R276			RK73GB2A331J	CHIP R 330 J 1/10W	
R280,281			RK73GB2A102J	CHIP R 1.0K J 1/10W	
R304			RK73GB2A271J	CHIP R 270 J 1/10W	
R305,306			RK73GB2A562J	CHIP R 5.6K J 1/10W	
R308			RK73FB2B561J	CHIP R 560 J 1/8W	
R310			RK73GB2A104J	CHIP R 100K J 1/10W	
R319-321			RK73GB2A221J	CHIP R 220 J 1/10W	
R501			RK73GB2A101J	CHIP R 100 J 1/10W	
R502,503			RK73GB2A392J	CHIP R 3.9K J 1/10W	
VR30			R32-0244-05	SEMI FIXED VARIABLE RESISTOR (2K)	
VR101			R32-0244-05	SEMI FIXED VARIABLE RESISTOR (2K)	
VR102			R32-0235-05	SEMI FIXED VARIABLE RESISTOR (10K)	
W1			R92-1252-05	CHIP R 0 OHM J 1/16W	
W3			R92-1252-05	CHIP R 0 OHM J 1/16W	
W6			R92-1252-05	CHIP R 0 OHM J 1/16W	
W106-114			R92-1252-05	CHIP R 0 OHM J 1/16W	
W117			R92-1252-05	CHIP R 0 OHM J 1/16W	
W120			R92-1252-05	CHIP R 0 OHM J 1/16W	
W203			R92-1252-05	CHIP R 0 OHM J 1/16W	
D31			RB060L-40	DIODE	
D32			MA3110-M	ZENER DIODE	
D62			DAN202U	DIODE	
D101			MA8051-M	ZENER DIODE	
D102			MA335	VARIABLE CAPACITANCE DIODE	
D201-206			DA204U	DIODE	
D208-210			DAN202U	DIODE	
IC31			TL5001ID	ANALOGUE IC	
IC101			NJM2107F	ANALOGUE IC	
IC102			TC160G11AF1146	MOS-IC	
IC200,201			NJM2535V	ANALOGUE IC	
IC202			NJW1303V	ANALOGUE IC	
IC203			AN2546FH-AV	ANALOGUE IC	
IC205			S-24C01B	ROM IC	
IC207			NJM4580V	ANALOGUE IC	
IC209			TC7W34FU	MOS-IC	
IC211			NJU7222U30	ANALOGUE IC	
IC212			NJU7223DL1-50	ANALOGUE IC	
IC217			TC7S14F	MOS-IC	
Q1			2SC4081	TRANSISTOR	

E : Europe **K** : North America **M** : Other Areas **W** : Without Europe

⚠ Indicates safety critical components.

PARTS LIST

VIDEO UNIT (X35-4252-71)

Ref. No.	Add	New	Parts No.	Description	Destination
Q2			2SB1203-FA	TRANSISTOR	
Q3			DTA124EUA	DIGITAL TRANSISTOR	
Q4			DTC124EUA	DIGITAL TRANSISTOR	
Q31			2SC4081	TRANSISTOR	
Q32			2SA1576A	TRANSISTOR	
Q33			2SJ327Z	FET	
Q35-37			2SD1803	TRANSISTOR	
Q38			DTA124EUA	DIGITAL TRANSISTOR	
Q39			DTC124EUA	DIGITAL TRANSISTOR	
Q40			2SA1576A	TRANSISTOR	
Q41			2SC4081	TRANSISTOR	
Q42			2SJ327Z	FET	
Q43			DTC124EUA	DIGITAL TRANSISTOR	
Q101			2SC2411K	TRANSISTOR	
Q102			DTC124EUA	DIGITAL TRANSISTOR	
Q203			2SC4097	TRANSISTOR	
Q204			2SA1577	TRANSISTOR	
Q205			2SC4081	TRANSISTOR	
Q206			2SA1576A	TRANSISTOR	
Q209,210			DTC124EUA	DIGITAL TRANSISTOR	

Ref. No.	Add	New	Parts No.	Description	Destination

E : Europe **K** : North America **M** : Other Areas **W** : Without Europe

⚠ Indicates safety critical components.

FGZ000UF2

SPECIFICATIONS

Monitor Unit

Screen size ..... 7.0 inches wide
Display system ..... Transparent TN LCD panel
Drive system ..... TFT active matrix system
Number of pixels ..... 400 H x 234 V x RGB
Effective pixels 99.99%
Pixel arrangement ..... RGB striped arrangement
Back lighting ..... Cold cathode tube

General

Operating voltage ..... 13.2V DC (10.8~15.6V)

KENWOOD follows a policy of continuous advancements in development.
For this reason specifications may be changed without notice.
Although the effective pixels for the liquid crystal panel is given as 99.99% or more, 0.01% of pixels may not light or may light incorrectly.