IMPORTANT

WARNING/CAUTION/NOTE

Please read this manual and follow its instructions carefully. To emphasize special information, the words **WARNING**, **CAUTION** and **NOTE** have special meanings. Pay special attention to the messages highlighted by these signal words.

WARNING:
Indicates a potential hazard that could result in death or injury.

CAUTION:
Indicates a potential hazard that could result in vehicle damage.

NOTE:
Indicates special information to make maintenance easier or instructions clearer.

WARNING:
This service manual is intended for authorized SUZUKI dealers and qualified service mechanics only. Inexperienced mechanics or mechanics without the proper tools and equipment may not be able to properly perform the services described in this manual. Improper repair may result in injury to the mechanic and may render the vehicle unsafe for the driver and passengers.

WARNING:
For vehicles equipped with Supplemental Restraint (Air Bag) System:

- **Service on or around the air bag system components must be performed only by an authorized SUZUKI dealer. Please observe all WARNINGS, CAUTIONS and "Service Precautions" under "On-Vehicle Service" in SECTION 10B before performing service on or around the air bag system components or wiring. Failure to follow WARNINGS could result in unintentional activation of the system or could render the system inoperative. Either of these two conditions may result in serve injury.**
- **If the air bag system and another vehicle system both need repair, SUZUKI recommends that the air bag system be repaired first, to help avoid unintentional activation of the air bag system.**
- **Do not modify the steering wheel, instrument panel or any other air bag system component. Modifications can adversely affect air bag system performance and lead to injury.**
- **If the vehicle will be exposed to temperatures over 93°C (200°F) (for example, during a paint baking process), remove the air bag system components (air bag (inflator) modules, SDM and seat belt pretensioner (if equipped)) beforehand to avoid component damage or unintended activation of the system.**

FOREWORD

This manual contains procedures for diagnosis, maintenance, adjustments, minor service operations, replacement of components and for disassembly and assembly of major components.

Applicable model: SN413

The contents are classified into sections each of which is given a section number as indicated in the Table of Contents on following page. And on the first page of each individual section is an index of that section.
This manual should be kept in a handy place for ready reference of the service work.
Strict observance of the so specified items will enable one to obtain the full performance of the vehicle.

When replacing parts or servicing by disassembling, it is recommended to use SUZUKI genuine parts, tools and service materials (lubricant, sealants, etc.) as specified in each description.

All information, illustrations and specifications contained in this literature are based on the latest product information available at the time of publication approval, And used as the main subject of description is the vehicle of standard specifications among others. Therefore, note that illustrations may differ from the vehicle being actually serviced.
The right is reserved to make changes at any time without notice.

Related Manual

Manual Name	Manual Number
AIR CONDITIONING BASIC MANUAL	99520-02130
SN413 WIRING DIAGRAM MANUAL	99512-81A00-015

SUZUKI MOTOR CORPORATION
OVERSEAS SERVICE DEPARTMENT

© COPYRIGHT SUZUKI MOTOR CORPORATION 1998

TABLE OF CONTENTS		SECTION
GENERAL INFORMATION	General Information	0A
	Maintenance and Lubrication	0B
HEATING AND AIR CONDITIONING	Heater and Ventilation	1A
	Air Conditioning	1B
STEERING, SUSPENSION, WHEELS AND TIRES	Steering, Suspension, Wheels and Tires	3
	Front End Alignment	3A
	Steering Gear Box and Linkage	3B
	Power Steering (P/S) System	3B1
	Steering Wheel and Column	3C
	Front Suspension	3D
	Rear Suspension	3E
	Wheel and Tires	3F
DRIVE SHAFTS AND PROPELLER SHAFT	Propeller Shafts	4B
BRAKE SYSTEM	Brakes	5
	Anti-lock Brake System (ABS)	5E
ENGINE	Engine	6
	Engine Mechanical	6A
	Engine Cooling	6B
	Engine Fuel	6C
	Engine and Emission Control System	6E
	Ignition System	6F
	Cranking System	6G
	Charging System	6H
	Exhaust System	6K
TRANSMISSION, CLUTCH AND DIFFERENTIAL	Manual Transmission	7A
	Automatic Transmission (4 A/T)	7B
	Clutch	7C
	Transfer	7D
	Differential (Front and Rear)	7E
ELECTRICAL SYSTEM	Electrical System	8
	Immobilizer Control System	8G
BODY SERVICE		9
RESTRAINT SYSTEM	Restraint System	10
	Seat Belt	10A
	Air Bag System	10B

SECTION 0A

0A

GENERAL INFORMATION

CONTENTS

HOW TO USE THIS MANUAL 0A- 2

PRECAUTIONS 0A- 3
- Precautions for Vehicle Equipped with a Supplemental Restraint (Air Bag) System 0A- 3
  - Diagnosis 0A- 3
  - Servicing and Handling 0A- 4
- General Precautions 0A- 7
- Precautions for Catalytic Converter 0A- 9
- Precautions for Electrical Circuit Service 0A-10
- Electrical Circuit Inspection Procedure 0A-11
- Intermittent and Poor Connection 0A-14
- Precaution for Installing Mobile Communication Equipment 0A-15

IDENTIFICATION INFORMATION 0A-15
- Body Number 0A-15
- Engine Identification Number 0A-15
- Transmission Identification Number 0A-15

WARNING, CAUTION AND INFORMATION LABELS 0A-16

VEHICLE LIFTING POINTS 0A-17

ABBREVIATIONS MAY BE USED IN THIS MANUAL 0A-19

METRIC INFORMATION 0A-21
- Metric Fasteners 0A-21
- Fasteners Strength Identification 0A-21
- Standard Tightening Torque 0A-21

HOW TO USE THIS MANUAL

1) There is a TABLE OF CONTENTS FOR THE WHOLE MANUAL on the third page of this manual, whereby you can easily find the section that offers the information you need. Also, there is a CONTENTS on the first page of EACH SECTION, where the main items in that section are listed.
2) Each section of this manual has its own pagination. It is indicated at the top of each page along with the Section name.
3) The SPECIAL TOOL usage and TORQUE SPECIFICATION are given as shown in figure below.

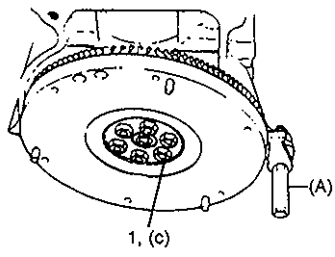

1. Flywheel bolts or drive plate bolts for A/T vehicle

6) Install oil pump. Refer to "Oil pump".
7) Install flywheel (for M/T vehicle) or drive plate (for A/T vehicle). Using special tool, lock flywheel or drive plate, and tighten flywheel or drive plate bolts to specified torque.

Special Tool
(A): 09924-17810
Tightening Torque
(c): 78 N·m (7.8 kg-m, 56.0 lb-ft)

4) A number of abbreviations are used in the text.
For their full explanations, refer to **"ABBREVIATIONS MAY BE USED IN THIS MANUAL"** of this section.
5) The SI, metric and foot-pound systems are used as units in this manual.
6) DIAGNOSIS are included in each section as necessary.
7) At the end of each section, there are descriptions of SPECIAL TOOLS, REQUIRED SERVICE MATERIALS and TIGHTENING TORQUE SPECIFICATIONS that should be used for the servicing work described in that section.

PRECAUTIONS

PRECAUTION FOR VEHICLES EQUIPPED WITH A SUPPLEMENTAL RESTRAINT (AIR BAG) SYSTEM

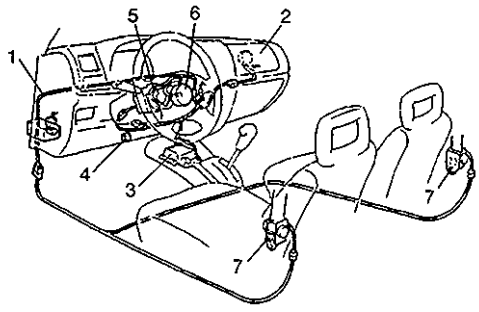

1. Air bag wire harness
2. Passenger air bag (inflator) module
3. SDM
4. DLC
5. Contact coil
6. Driver air bag (inflator) module
7. Seat belt pretensioner (if equipped)

WARNING:

- The configuration of air bag system parts are as shown in the figure. When it is necessary to service (remove, reinstall and inspect) these parts, be sure to follow procedures described in SECTION 10B. Failure to follow proper procedures could result in possible air bag system activation, personal injury, damage to parts or air bag system being unable to activate when necessary.
- If the air bag system and another vehicle system both need repair, SUZUKI recommends that the air bag system be repaired first, to help avoid unintended air bag system activation.
- Do not modify the steering wheel, dashboard, or any other air bag system components. Modifications can adversely affect air bag system performance and lead to injury.
- If the vehicle will be exposed to temperatures over 93°C (200°F) (for example, during a paint baking process), remove the air bag system components beforehand to avoid component damage or unintended air bag system activation.

DIAGNOSIS

- When troubleshooting air bag system, be sure to follow "DIAGNOSIS" in SECTION 10B. Bypassing these procedures may result in extended diagnostic time, incorrect diagnosis, and incorrect parts replacement.
- Never use electrical test equipment other than that specified in this manual.

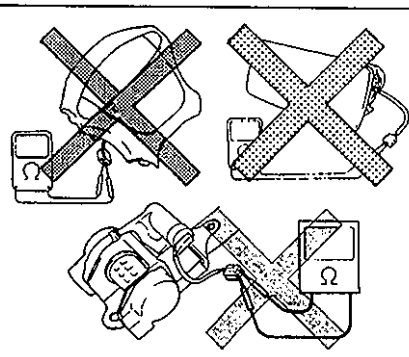

WARNING:
Never attempt to measure the resistance of the air bag (inflator) modules (driver and passenger) and seat belt pretentioners (driver and passenger). It is very dangerous as the electric current from the tester may deploy the air bag or activate the pretensioner.

ALWAYS CARRY AIR BAG (INFLATOR) MODULE WITH TRIM COVER (AIR BAG OPENING) AWAY FROM BODY.

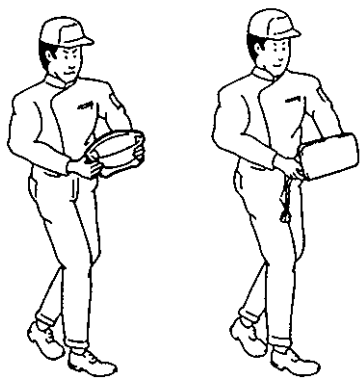

ALWAYS PLACE AIR BAG (INFLATOR) MODULE ON WORKBENCH WITH TRIM COVER (AIR BAG OPENING) UP, AWAY FROM LOOSE OBJECTS.

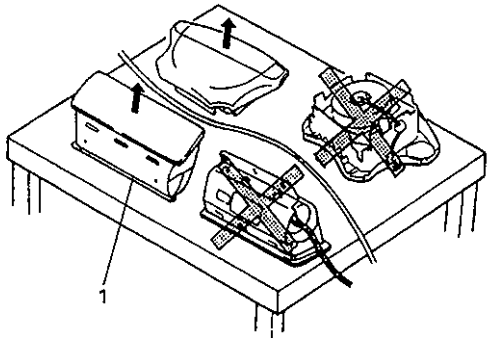

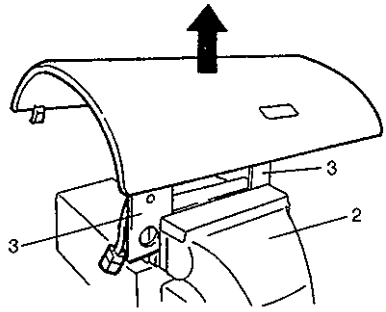

1. Slit on workbench
2. Workbench vise
3. Lower mounting bracket

SERVICING AND HANDLING

WARNING:

Many of service procedures require disconnection of "AIR BAG" fuse and all air bag (inflator) module(s) from initiator circuit to avoid an accidental deployment.

Driver and Passenger Air Bag (Inflator) Modules

- **For handling and storage of a live air bag (inflator) module, select a place where the ambient temperature below 65°C (150°F), without high humidity and away from electric noise.**
- **When carrying a live air bag (inflator) module, make sure the bag opening is pointed away from you. In case of an accidental deployment, the bag will then deploy with minimal chance of injury. Never carry the air bag (inflator) module by the wires or connector on the underside of the module. When placing a live air bag (inflator) module on a bench or other surface, always face the bag up, away from the surface. As the live passenger air bag (inflator) module must be placed with its bag (trim cover) facing up, place it on the workbench with a slit or use the workbench vise to hold it securely at its lower mounting bracket. This is necessary so that a free space is provided to allow the air bag to expand in the unlikely event of accidental deployment. Otherwise, personal injury may result.**
- **Never dispose of live (undeployed) air bag (inflator) modules (driver and passenger). If disposal is necessary, be sure to deploy them according to deployment procedures described in SECTION 10B before disposal.**
- **The air bag (inflator) module immediately after deployment is very hot. Wait for at least half an hour to cool it off before proceeding the work.**
- **After an air bag (inflator) module has been deployed, the surface of the air bag may contain a powdery residue. This powder consists primarily of cornstarch (used to lubricate the bag as it inflates) and by-products of the chemical reaction. As with many service procedures, gloves and safety glasses should be worn.**

WARNING:
SDM

- **During service procedures, be very careful when handling a Sensing and Diagnostic Module (SDM). Never strike or jar the SDM.**
  Never power up the air bag system when the SDM is not rigidly attached to the vehicle. All SDM and mounting bracket fasteners must be carefully torqued and the arrow must be pointing toward the front of the vehicle to ensure proper operation of the air bag system. The SDM could be activated when powered while not rigidly attached to the vehicle which could cause deployment and result in personal injury.

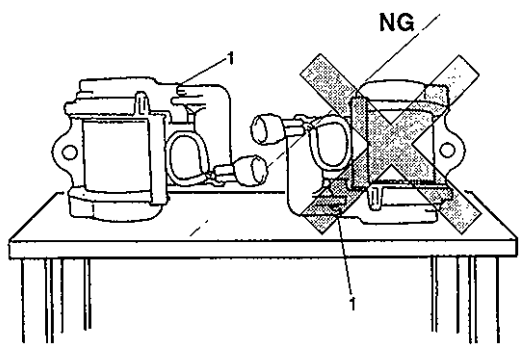

1. Exhaust hole

WARNING:
Driver and Passenger Seat Belt Pretensioners (If equipped)

- **For handling and storage of a live seat belt pretensioner, select a place where the ambient temperature below 65°C (150°F), without high humidity and away from electric noise.**
- **Never carry seat belt pretensioner by wire or connector of pretensioner. When placing a live seat belt pretensioner on the workbench or some place like that, be sure not to lay it with its exhaust hole provided side facing down. It is also prohibited to put something on its face with an exhaust hole or to put a seat belt pretensioner on top of another. Otherwise, personal injury may result.**
- **Never dispose of live (inactivated) seat belt pretensioners (driver and passenger). If disposal is necessary, be sure to activate them according to activation procedures described in SECTION 10B before disposal.**
- **The seat belt pretensioner immediately after activation is very hot. Wait for at least half an hour to cool it off before proceeding the work.**
- **With many service procedures, gloves and safety glasses should be worn to prevent any possible irritation of the skin or eyes.**

CAUTION:

- Even when the accident was light enough not to cause air bags to activate, be sure to inspect system parts and other related parts according to instructions under "Repair and Inspection Required after an Accident" in SECTION 10B.
- When servicing parts other than air bag system, if shocks may be applied to air bag system component parts, remove those parts beforehand.
- When handling the air bag (inflator) modules (driver and passenger), seat belt pretensioners (driver and passenger) or SDM, be careful not to drop it or apply an impact to it. If an excessive impact was applied (e.g., dropped from a height of 90 cm (3 feet) or more), never attempt disassembly or repair but replace it with a new one.
- When grease, cleaning agent, oil, water, etc. has got onto air bag (inflator) modules (driver and passenger) or seat belt pretensioners (drive and passenger), wipe off immediately with a dry cloth.
- Air bag wire harness can be identified easily as it is covered with a yellow protection tube. Be very careful when handling it.
- When an open in air bag wire harness, damaged wire harness, connector or terminal is found, replace wire harness, connectors and terminals as an assembly.
- Do not apply power to the air bag system unless all components are connected or a diagnostic chart requests it, as this will set a diagnostic trouble code.
- Never use air bag system component parts from another vehicle.
- When using electric welding, be sure to temporarily disable air bag system referring to "Disabling Air Bag System" described in "Service Precautions" under "On-Vehicle Service" in SECTION 10B.
- Never expose air bag system component parts directly to hot air (drying or baking the vehicle after painting) or flames.
- WARNING/CAUTION labels are attached on each part of air bag system components. Be sure to follow the instructions.
- After vehicle is completely repaired, perform "Air Bag Diagnostic System Check" described in "Diagnosis" in SECTION 10B.

GENERAL PRECAUTIONS

The WARNING and CAUTION below describe some general precautions that you should observe when servicing a vehicle. These general precautions apply to many of the service procedures described in this manual, and they will not necessarily be repeated with each procedure to which they apply.

WARNING:

- **Whenever raising a vehicle for service, be sure to follow the instructions under "VEHICLE LIFTING POINTS" on SECTION 0A.**
- **When it is necessary to do service work with the engine running, make sure that the parking brake is set fully and the transmission is in Neutral (for manual transmission vehicles) or Park (for automatic transmission vehicles), Keep hands, hair, clothing, tools, etc. away from the fan and belts when the engine is running.**
- **When it is necessary to run the engine indoors, make sure that the exhaust gas is forced outdoors.**
- **Do not perform service work in areas where combustible materials can come in contact with a hot exhaust system. When working with toxic or flammable materials (such as gasoline and refrigerant), make sure that the area you work in is well-ventilated.**
- **To avoid getting burned, keep away from hot metal parts such as the radiator, exhaust manifold, tailpipe, muffler, etc.**
- **New and used engine oil can be hazardous. Children and pets may be harmed by swallowing new or used oil. Keep new and used oil and used engine oil filters away from children and pets. Continuous contact with used engine oil has been found to cause [skin] cancer in laboratory animals. Brief contact with used oil may irritate skin. To minimize your exposure to used engine oil, wear a long-sleeve shirt and moisture-proof gloves (such as dish washing gloves) when changing engine oil. If engine oil contacts your skin, wash thoroughly with soap and water. Launder any clothing or rags if wet with oil, recycle or properly dispose of used oil and filters.**
- **Make sure the bonnet is fully closed and latched before driving. If it is not, it can fly up unexpectedly during driving, obstructing your view and resulting in an accident.**

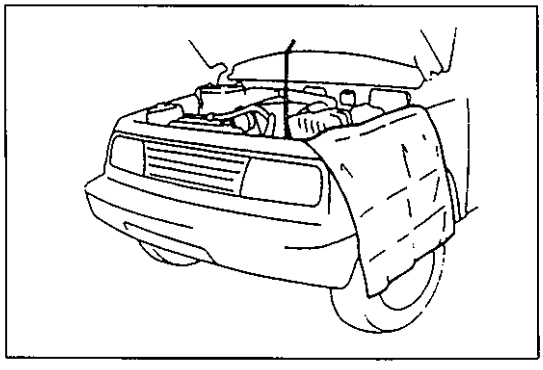

CAUTION:

- **Before starting any service work, cover fenders, seats and any other parts that are likely to get scratched or stained during servicing. Also, be aware that what you wear (e.g, buttons) may cause damage to the vehicle's finish.**

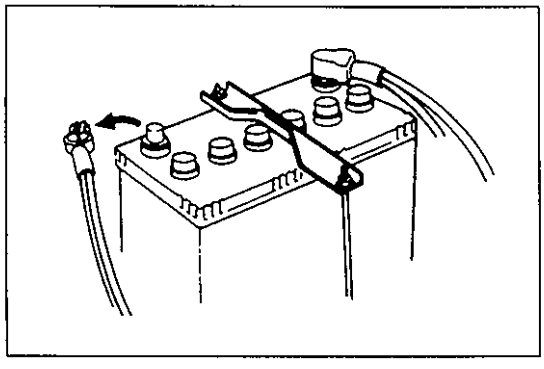

- **When performing service to electrical parts that does not require use of battery power, disconnect the negative cable of the battery.**

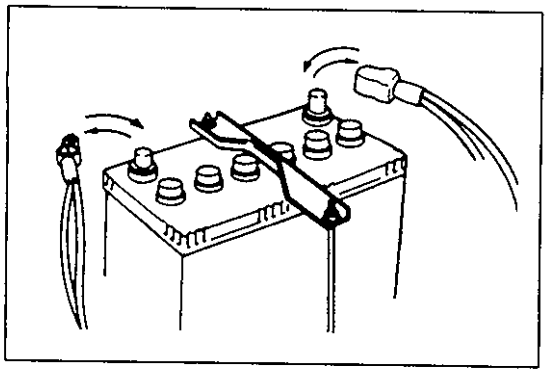

- When removing the battery, be sure to disconnect the negative cable first and then the positive cable. When reconnecting the battery, connect the positive cable first and then the negative cable, and replace the terminal cover.

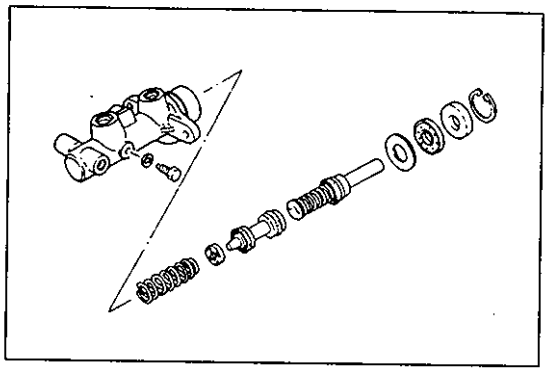

- When removing parts that are to be reused, be sure to keep them arranged in an orderly manner so that they may be reinstalled in the proper order and position.

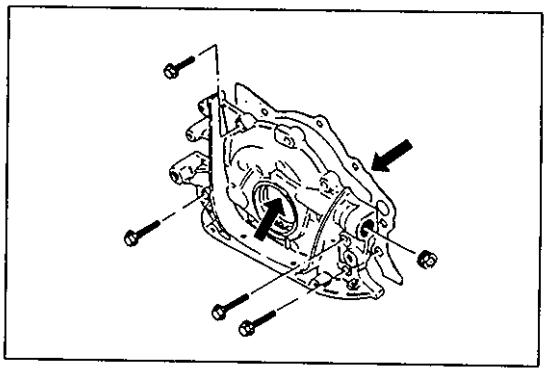

- Whenever you use oil seals, gaskets, packing, O-rings, locking washers, split pins, self-locking nuts, and certain other parts as specified, be sure to use new ones. Also, before installing new gaskets, packing, etc., be sure to remove any residual material from the mating surfaces.

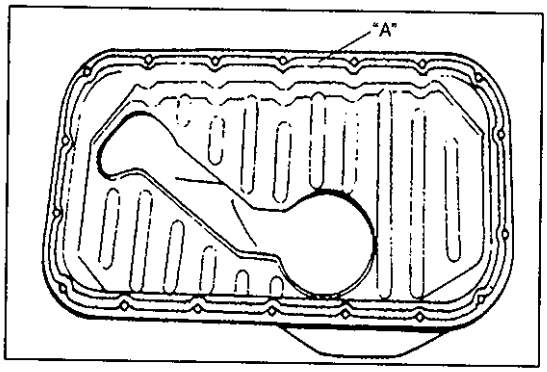

- Make sure that all parts used in reassembly are perfectly clean.
- When use of a certain type of lubricant, bond or sealant is specified, be sure to use the specified type.

"A": Sealant 99000-31150

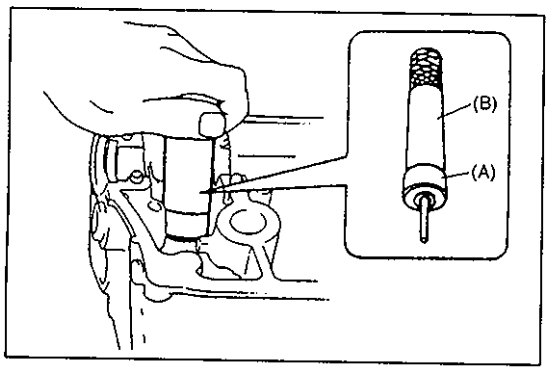

- Be sure to use special tools when instructed.

Special Tool
(A): 09917-98221
(B): 09916-58210

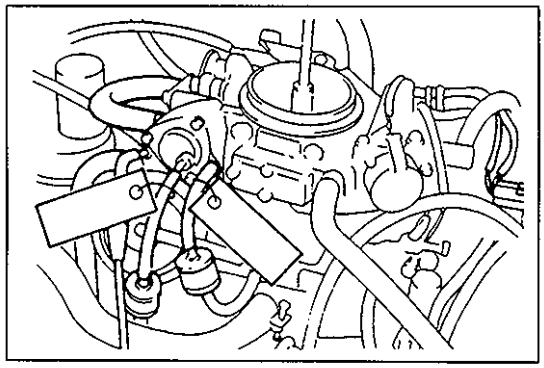

- When disconnecting vacuum hoses, attach a tag describing the correct installation positions so that the hoses can be reinstalled correctly.

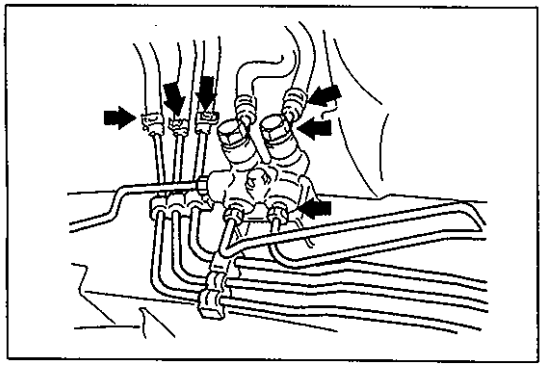

- After servicing fuel, oil, coolant, vacuum, exhaust or brake systems, check all lines related to the system for leaks.

- For vehicles equipped with fuel injection systems, never disconnect the fuel line between the fuel pump and injector without first releasing the fuel pressure, or fuel can be sprayed out under pressure.

PRECAUTIONS FOR CATALYTIC CONVERTER

For vehicles equipped with a catalytic converter, use only unleaded gasoline and be careful not to let a large amount of unburned gasoline enter the converter or it can be damaged.

- Conduct a spark jump test only when necessary, make it as short as possible, and do not open the throttle.
- Conduct engine compression checks within the shortest possible time.
- Avoid situations which can result in engine misfire (e.g. starting the engine when the fuel tank is nearly empty.)

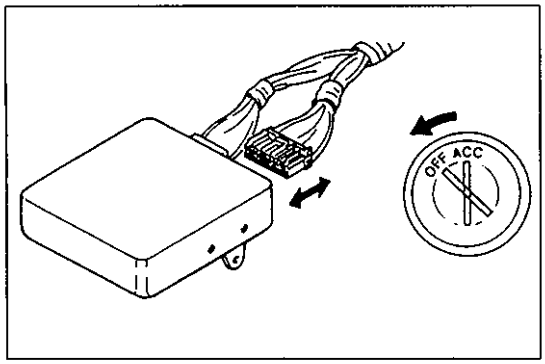

PRECAUTIONS FOR ELECTRICAL CIRCUIT SERVICE

- When disconnecting and connecting coupler, make sure to turn ignition switch OFF, or electronic parts may get damaged.

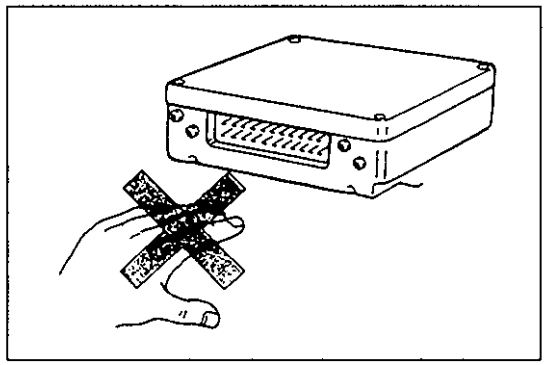

- Be careful not to touch the electrical terminals of parts which use microcomputers (e.g. electronic control unit like as ECM, PCM, P/S controller, etc.). The static electricity from your body can damage these parts.
- Never connect any tester (voltmeter, ohmmeter, or whatever) to electronic control unit when its coupler is disconnected. Attempt to do it may cause damage to it.
- Never connect an ohmmeter to electronic control unit with its coupler connected to it. Attempt to do it may cause damage to electronic control unit and sensors.
- Be sure to use a specified voltmeter/ohmmeter. Otherwise, accurate measurements may not be obtained or personal injury may result.

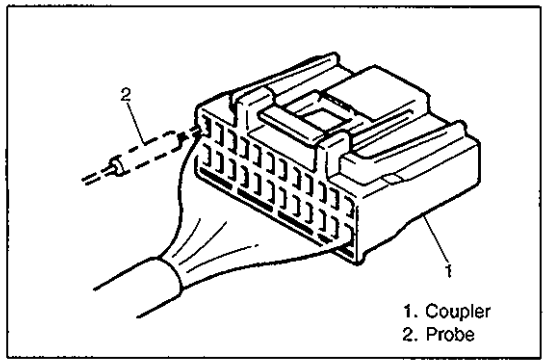

1. Coupler
2. Probe

- When taking measurements at electrical connectors using a tester probe, be sure to insert the probe from the wire harness side (backside) of the connector.

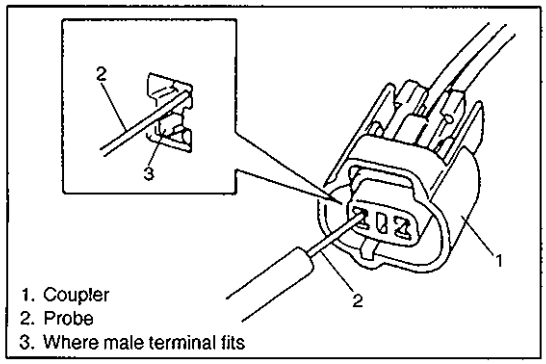

1. Coupler
2. Probe
3. Where male terminal fits

- When connecting meter probe from terminal side of coupler because it can't be connected from harness side, use extra care not to bend male terminal of coupler of force its female terminal open for connection.
  In case of such coupler as shown connect probe as shown to avoid opening female terminal.
  Never connect probe where male terminal is supposed to fit.

- **When checking connection of terminals, check its male half for bend and female half for excessive opening and both for locking (looseness), corrosion, dust, etc.**

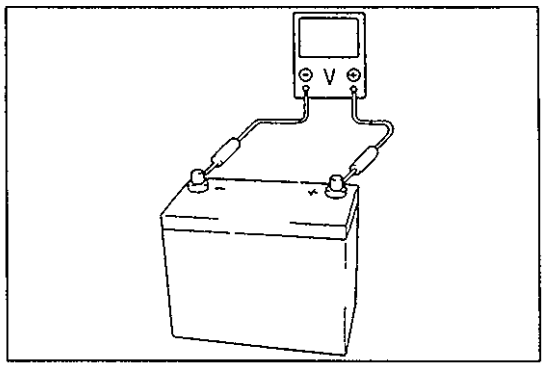

- **Before measuring voltage to check for electrical system, check to make sure that battery voltage is 11V or higher. Such terminal voltage check at low battery voltage will lead to erroneous diagnosis.**

ELECTRICAL CIRCUIT INSPECTION PROCEDURE

While there are various electrical circuit inspection methods, described here is a general method to check its open and short circuit by using an ohmmeter and a voltmeter.

OPEN CIRCUIT CHECK

Possible causes for the open circuit are as follows. As the cause is in the connector or terminal in many cases, they need to be checked particularly carefully.

- Loose connection of connector
- Poor contact of terminal (due to dirt, corrosion or rust on it, poor contact tension, entry of foreign object etc.)
- Wire harness being open

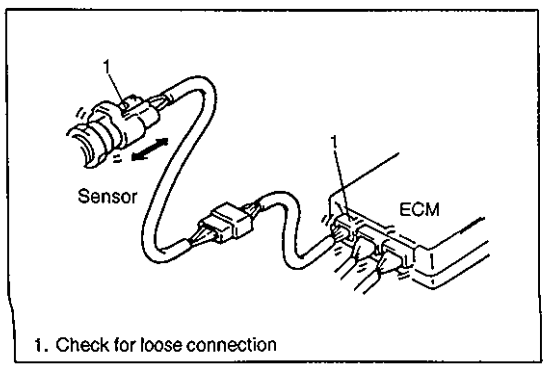

1. Check for loose connection

When checking system circuits including an electronic control unit such as ECM, TCM, ABS control module, etc., it is important to perform careful check, starting with items which are easier to check.

1) Disconnect negative cable from battery
2) Check each connector at both ends of the circuit being checked for loose connection. Also check lock condition of connector if equipped with connector lock.

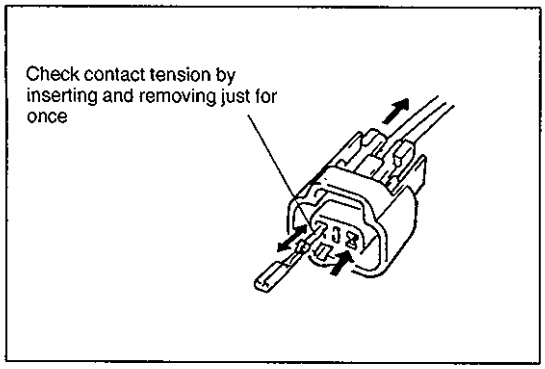

3) Using a test male terminal, check both terminals of the circuit being checked for contact tension of its female terminal.
Check each terminal visually for poor contact (possibly caused by dirt, corrosion, rust entry of foreign object, etc.).
At the same time, check to make sure that each terminal is locked in the connector fully.

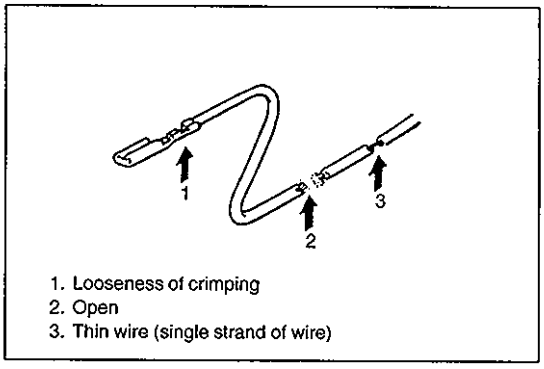

1. Looseness of crimping
2. Open
3. Thin wire (single strand of wire)

4) Using continuity check or voltage check procedure described in the following page, check the wire harness for open circuit and poor connection with its terminals. Locate abnormality, if any.

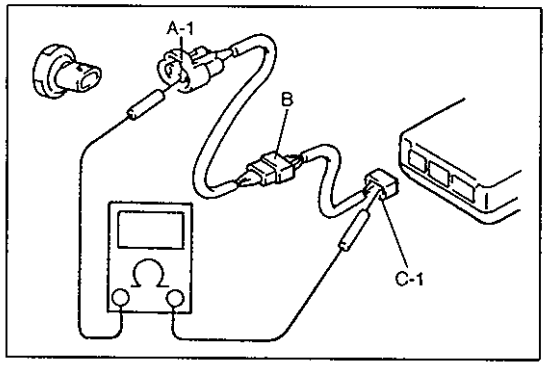

Continuity check

1) Measure resistance between connector terminals at both ends of the circuit being checked (between A-1 and C-1 in the figure).
If no continuity is indicated (infinity or over limit), that means that the circuit is open between terminals A-1 and C-1.

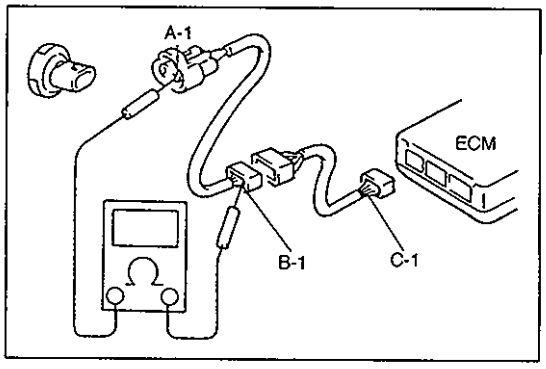

2) Disconnect the connector included in the circuit (connector-B in the figure) and measure resistance between terminals A-1 and B-1.
If no continuity is indicated, that means that the circuit is open between terminals A-1 and B-1. If continuity is indicated, there is an open circuit between terminals B-1 and C-1 or an abnormality in connector-B.

Voltage check

If voltage is supplied to the circuit being checked, voltage check can be used as circuit check.

1) With all connectors connected and voltage applied to the circuit being checked, measure voltage between *each terminal and* body ground.

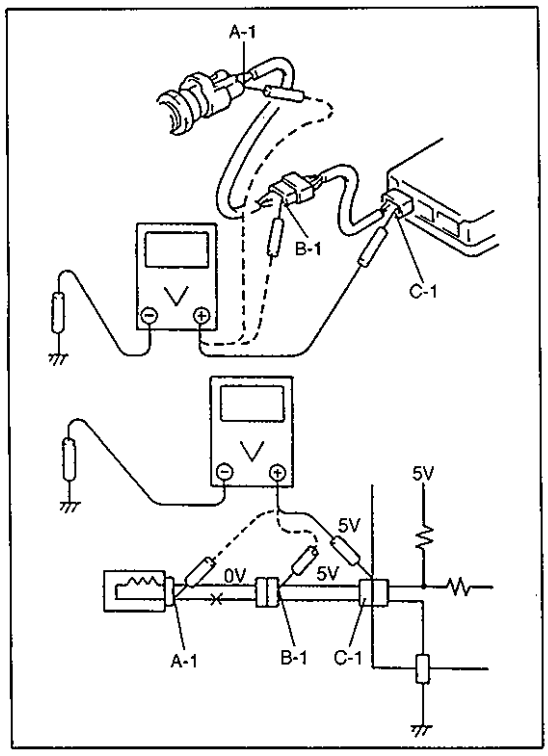

If measurements were taken as shown in the figure at the left and results were as listed below, it means that the circuit is open between terminals B-1 and A-1.

Voltage Between:
C-1 and body ground: Approx. 5V
B-1 and body ground: Approx. 5V
A-1 and body ground: 0V

Also, if measured values were as listed below, it means that there is a resistance (abnormality) of such level that corresponds to the voltage drop in the circuit between terminals A-1 and B-1.

Voltage Between:
C-1 and body ground: Approx. 5V
B-1 and body ground: Approx. 5V
A-1 and body ground: Approx. 3V
2V voltage drop

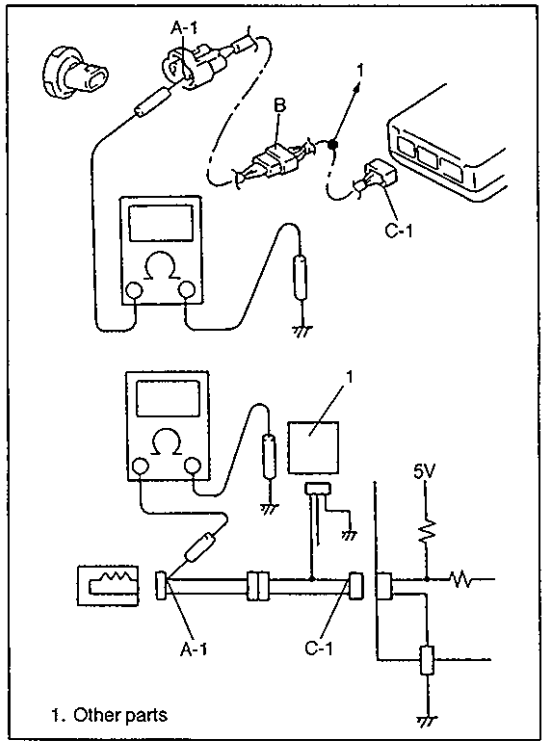

Short circuit check (wire harness to ground)

1) Disconnect negative cable from battery.
2) Disconnect connectors at both ends of the circuit to be checked.

NOTE:
If the circuit to be checked is connected to other parts, disconnect all connectors of those parts.
Otherwise, diagnosis will be misled.

3) Measure resistance between terminal at one end of circuit (A-1 terminal in figure) and body ground. If continuity is indicated, it means that there is a short to ground between terminals A-1 and C-1 of the circuit.

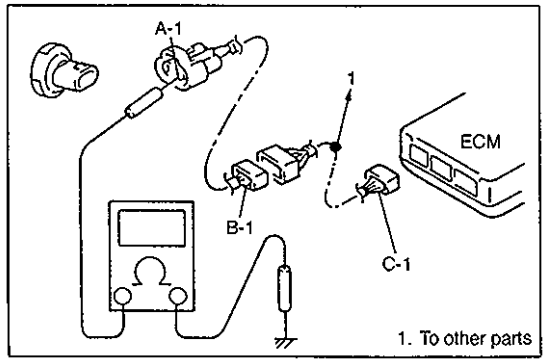

4) Disconnect the connector included in circuit (connector B) and measure resistance between A-1 and body ground.
If continuity is indicated, it means that the circuit is shorted to the ground between terminals A-1 and B-1.

INTERMITTENT AND POOR CONNECTION

Most intermittent are caused by faulty electrical connections or wiring, although a sticking relay or solenoid can occasionally be at fault. When checking it for proper connection, perform careful check of suspect circuits for:

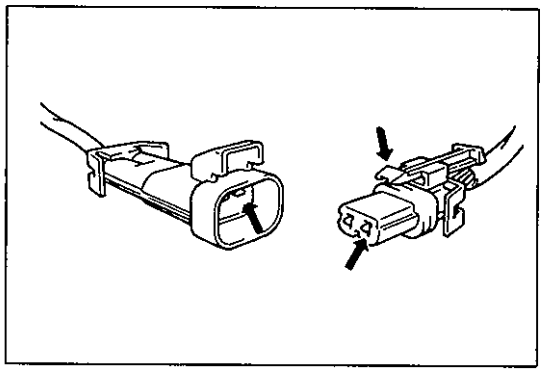

- Poor mating of connector halves, or terminals not fully seated in the connector body (backed out).
- Dirt or corrosion on the terminals. The terminals must be clean and free of any foreign material which could impede proper terminal contact. However, cleaning the terminal with a sand paper or the like is prohibited.
- Damaged connector body, exposing the terminals to moisture and dirt, as well as not maintaining proper terminal orientation with the component or mating connector.

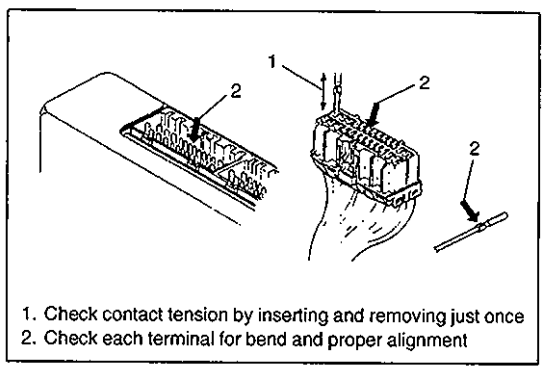

1. Check contact tension by inserting and removing just once
2. Check each terminal for bend and proper alignment

- Improperly formed or damaged terminals.
  Check each connector terminal in problem circuits carefully to ensure good contact tension by using the corresponding mating terminal.
  If contact tension is not enough, reform it to increase contact tension or replace.

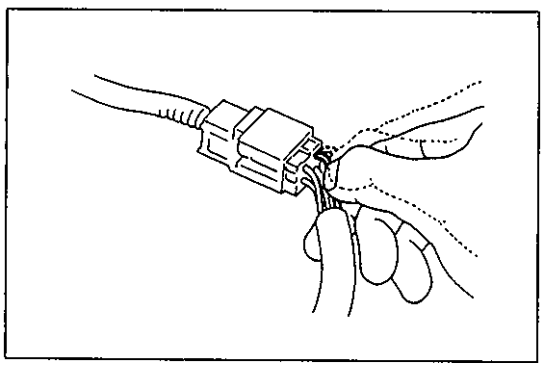

- Poor terminal-to-wire connection.
  Check each wire harness in problem circuits for poor connection by shaking it by hand lightly. If any abnormal condition is found, repair or replace.

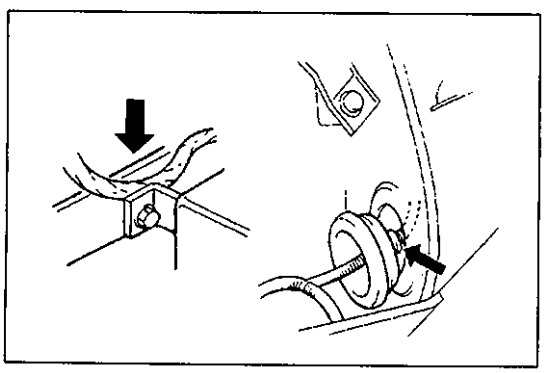

- Wire insulation which is rubbed through, causing an intermittent short as the bare area touches other wiring or parts of the vehicle.
- Wiring broken inside the insulation. This condition could cause continuity check to show a good circuit, but if only 1 or 2 strands of a multi-strand-type wire are intact, resistance could be far too high.
  If any abnormality is found, repair or replace.

PRECAUTION FOR INSTALLING MOBILE COMMUNICATION EQUIPMENT

When installing mobile communication equipment such as CB (Citizens-Band)-radio or cellular-telephone, be sure to observe the following precautions.
Failure to follow cautions may adversely affect electronic control system.

- Keep the antenna as far away as possible from the vehicle's electronic control unit.
- Keep the antenna feeder more than 20 cm (7.9 in) away from electronic control unit and its wire harnesses.
- Do not run the antenna feeder parallel with other wire harnesses.
- Confirm that the antenna and feeder are correctly adjusted.

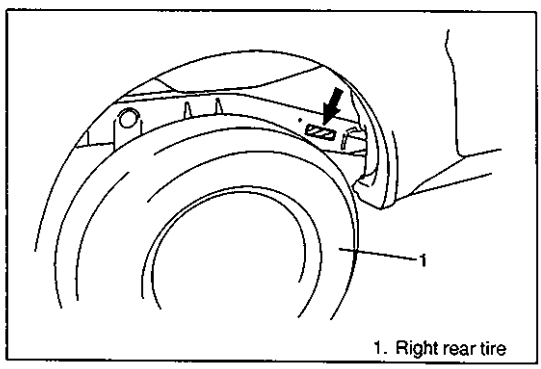

1. Right rear tire

IDENTIFICATION INFORMATION

BODY NUMBER

The vehicle body number is punched on the chassis inside the tire housing on the right rear side.

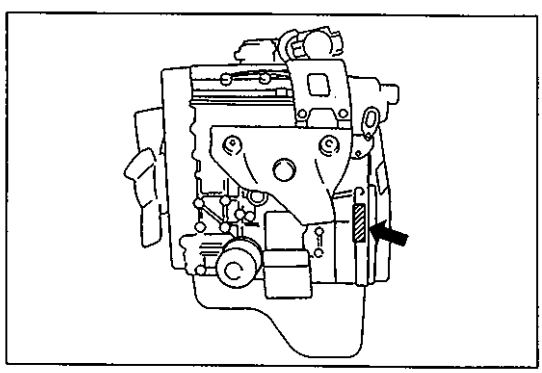

ENGINE IDENTIFICATION NUMBER

The number is punched on the cylinder block.

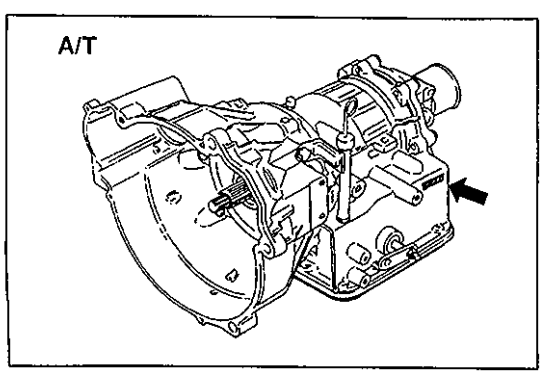

TRANSMISSION IDENTIFICATION NUMBER

The number is located on the transmission case.

WARNING, CAUTION AND INFORMATION LABELS

The figure below shows main labels among others that are attached to vehicle component parts.
When servicing and handling parts, refer to WARNING/CAUTION instructions printed on labels.
If any WARNING/CAUTION label is found stained or damaged, clean or replace it as necessary.

NOTE:
Air bag CAUTION/WARNING labels are attached on the vehicle equipped with air bag system only.

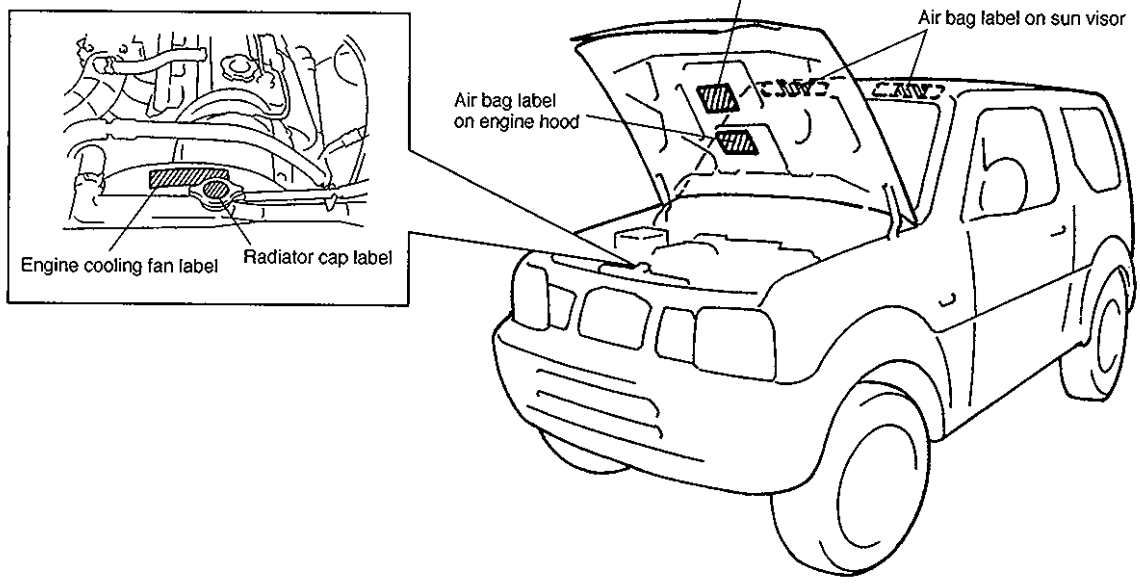

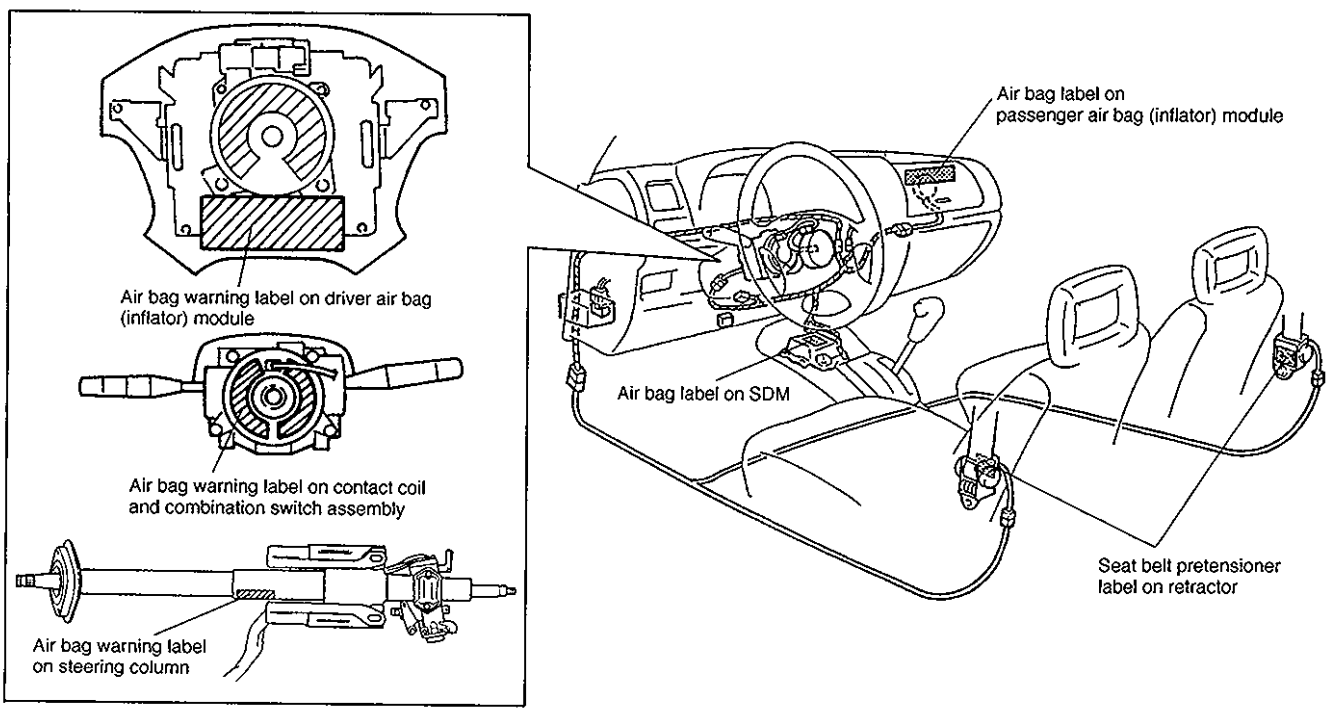

VEHICLE LIFTING POINTS

WARNING:

- **When using frame contact hoist, apply hoist as shown (right and left at the same position). Lift up the vehicle till 4 tires are a little off the ground and make sure that the vehicle will not fall off by trying to move vehicle body in both ways. Work can be started only after this confirmation.**
- **Before applying hoist to underbody, always take vehicle balance throughout service into consideration. Vehicle balance on hoist may change depending of what part to be removed.**
- **Make absolutely sure to lock hoist after vehicle is hoisted up.**
- **Before lifting up the vehicle, check to be sure that end of hoist arm is not in contact with brake pipe, fuel pipe, bracket or any other part.**

When using frame contact hoist:

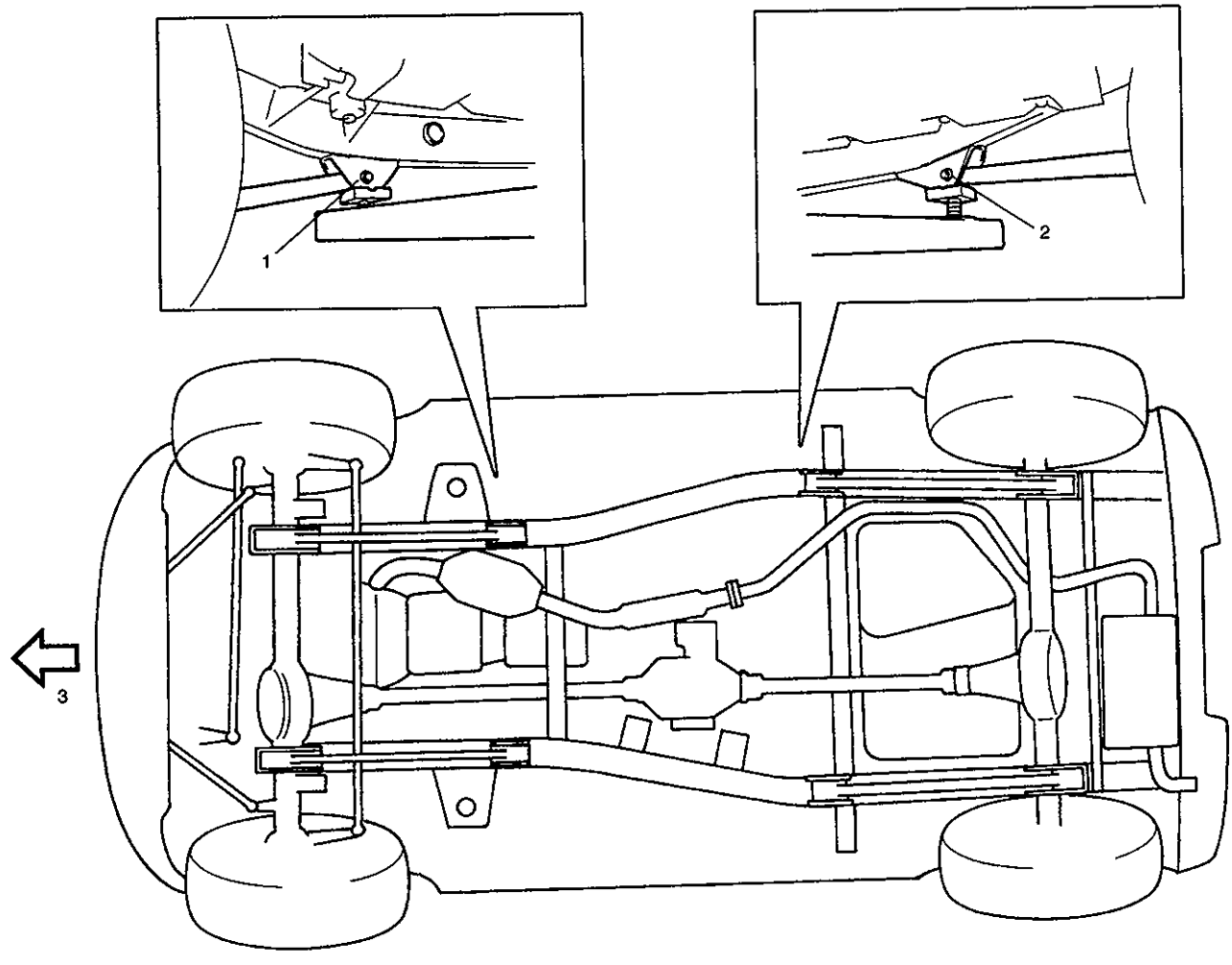

1. Front lifting point
2. Rear lifting point
3. Front

When using floor jack:

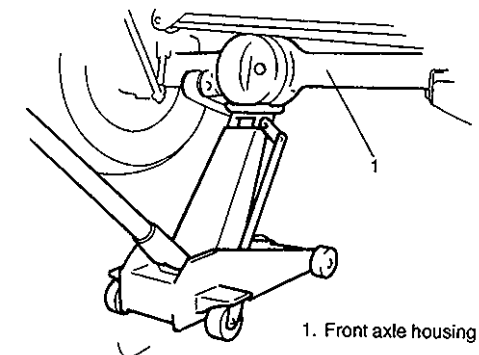

1. Front axle housing

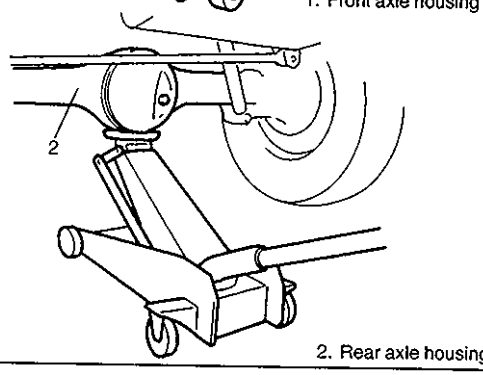

2. Rear axle housing

In raising front or rear vehicle end off the floor by jacking, be sure to put the jack against the center portion of the front axle housing or rear axle housing.

WARNING:

- **Never apply jack against suspension parts (i.e., stabilizer, etc.) or vehicle floor, or it may get deformed.**
- **If the vehicle to be jacked up only at the front or rear end, be sure to block the wheels on ground in order to ensure safety.**
  After the vehicle is jacked up, be sure to support it on stands. It is extremely dangerous to do any work on the vehicle raised on jack alone.

Front

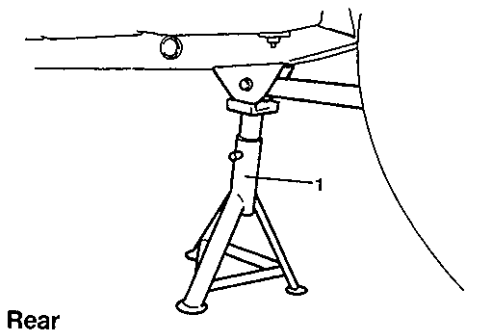

Rear

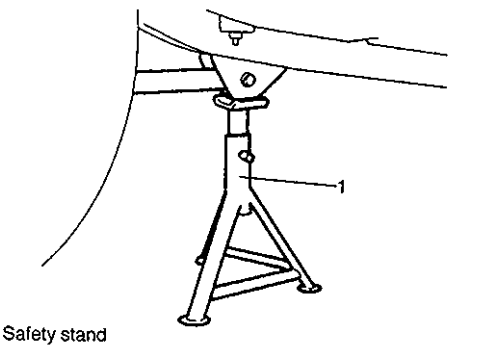

1. Safety stand

To perform service with either front or rear vehicle end jacked up, be sure to place safety stands under chassis frame so that body is securely supported. And then check to ensure that chassis frame does not slide on safety stands and the vehicle is held stable for safety's sake.

ABBREVIATIONS MAY BE USED IN THIS MANUAL

A

ABS	: Anti-lock Brake System
ATDC	: After Top Dead Center
API	: American Petroleum Institute
ATF	: Automatic Transmission Fluid
ALR	: Automatic Locking Retractor
AC	: Alternating Current
A/T	: Automatic Transmission
A/C	: Air Conditioning
ABDC	: After Bottom Dead Center
A/F	: Air Fuel Mixture Ratio
A-ELR	: Automatic-Emergency Locking Retractor

B

B+	: Battery Positive Voltage
BTDC	: Before Top Dead Center
BBDC	: Before Bottom Dead Center

C

CKT	: Circuit
CMP Sensor	: Camshaft Position Sensor (Crank Angle Sensor, CAS)
CO	: Carbon Monoxide
CPP Switch	: Clutch Pedal Position Switch (Clutch Switch, Clutch Start Switch)
CPU	: Central Processing Unit
CRS	: Child Restraint System

D

DC	: Direct Current
DLC	: Data Link Connector (Assembly Line Diag. Link, ALDL, Serial Data Link, SDL)
DOHC	: Double Over Head Camshaft
DOJ	: Double Offset Joint
DRL	: Daytime Running Light
DTC	: Diagnostic Trouble Code (Diagnostic Code)

E

EBCM	: Electronic Brake Control Module, ABS Control Module
ECM	: Engine Control Module
ECT Sensor	: Engine Coolant Temperature Sensor (Water Temp. Sensor, WTS)
EGR	: Exhaust Gas Recirculation
EGRT Sensor	: EGR Temperature Sensor (Recirculated Exhaust Gas Temp. Sensor, REGTS)
EFE Heater	: Early Fuel Evaporation Heater (Positive Temperature Coefficient, PTC Heater)
ELR	: Emergency Locking Retractor
EPS	: Electronic Power Steering
EVAP	: Evaporative Emission
EVAP Canister	: Evaporative Emission Canister (Charcoal Canister)

F

4WD	: 4 Wheel Drive

G

GEN	: Generator
GND	: Ground

H

HC	: Hydrocarbons
HO2S	: Heated Oxygen Sensor

I

IAC Valve	: Idle Air Control Valve (Idle Speed Control Solenoid Valve, ISC Solenoid Valve)
IAT Sensor	: Intake Air Temperature Sensor (Air temperature Sensor, ATS)
ICM	: Immobilizer Control Module
IG	: Ignition
ISC Actuator	: Idle Speed Control Actuator (Motor)

L

- LH : Left Hand
- LSPV : Load Sensing Proportioning Valve

M

- MAF Sensor : Mass Air Flow Sensor (Air Flow Sensor, AFS, Air Flow Meter, AFM)
- MAP Sensor : Manifold Absolute Pressure Sensor (Pressure Sensor, PS)
- Max : Maximum
- MFI : Multiport Fuel Injection (Multipoint Fuel Injection)
- Min : Minimum
- MIL : Malfunction Indicator Lamp ("CHECK ENGINE" Light)
- M/T : Manual Transmission

N

- NOx : Nitrogen Oxides

O

- OBD : On-Board Diagnostic System (Self-Diagnosis Function)
- O/D : Overdrive
- OHC : Over Head Camshaft

P

- PNP : Park/Neutral Position
- P/S : Power Steering
- PSP Switch : Power Steering Pressure Switch (P/S Pressure Switch)
- PCM : Powertrain Control Module
- PCV : Positive Crankcase Ventilation

R

- RH : Right Hand

S

- SAE : Society of Automotive Engineers
- SDM : Sensing and Diagnostic Module (Air bag controller, Air bag control module)
- SFI : Sequential Multiport Fuel Injection
- SOHC : Single Over Head Camshaft

T

- TBI : Throttle Body Fuel Injection (Single-Point Fuel Injection, SPI)
- TCC : Torque Converter Clutch
- TCM : Transmission Control Module (A/T Controller, A/T Control Module)
- TP Sensor : Throttle Position Sensor
- TVV : Thermal Vacuum Valve (Thermal Vacuum Switching Valve, TVSV, Bimetal Vacuum Switching Valve, BVSV)
- TWC : Three Way Catalytic Converter (Three Way Catalyst)
- 2WD : 2 Wheel Drive

V

- VIN : Vehicle Identification Number
- VSS : Vehicle Speed Sensor

W

- WU-OC : Warm Up Oxidation Catalytic Converter
- WU-TWC : Warm Up Three Way Catalytic Converter

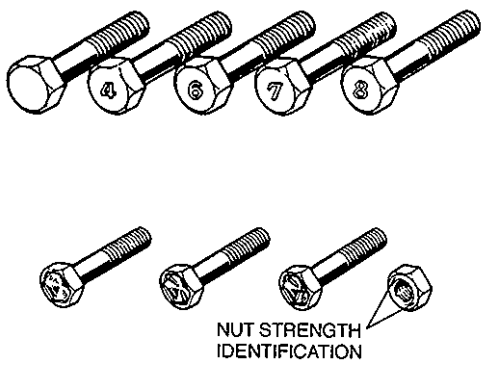

METRIC BOLTS–IDENTIFICATION CLASS NUMBERS OR MARKS CORRESPOND TO BOLT STRENGTH–INCREASING NUMBERS REPRESENT INCREASING STRENGTH.

METRIC INFORMATION

METRIC FASTENERS

Most of the fasteners used for this vehicle are metric. When replacing any fasteners, it is most important that replacement fasteners be the correct diameter, thread pitch and strength.

FASTENER STRENGTH IDENTIFICATION

Most commonly used metric fastener strength property classes are 4T, 7T and radial line with the class identification embossed on the head of each bolt. Some metric nuts will be marked with punch mark strength identification on the nut face. Figure shows the different strength markings.

When replacing metric fasteners, be careful to use bolts and nuts of the same strength or greater than the original fasteners (the same number marking or higher). It is likewise important to select replacement fasteners of the correct size. Correct replacement bolts and nuts are available through the parts division.

STANDARD TIGHTENING TORQUE

Each fastener should be tightened to the torque specified in each section of this manual. If no description or specification is provided, refer to the following tightening torque chart for the applicable torque for each fastener. When a fastener of greater strength than the original one is used, however, use the torque specified for the original fastener.

NOTE:

- **For the flanged bolt and nut, add 10% to the tightening torque given in the chart below.**
- **The chart below is applicable only where the fastened parts are made of steel light alloy.**

STRENGTH / THREAD DIAMETER (mm)	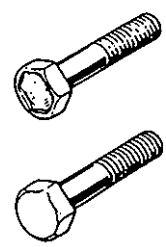 Conventional bolt			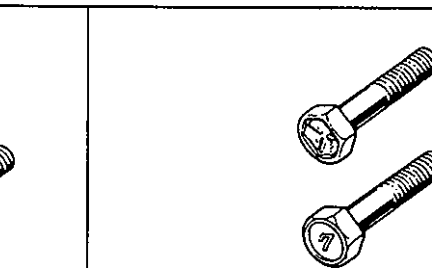 "4T" bolt		"7T" bolt
	N·m	kg-m	lb-ft	N·m	kg-m	lb-ft
4	1.5	0.15	1.0	2.3	0.23	2.0
5	3.0	0.30	2.5	4.5	0.45	3.5
6	5.5	0.55	4.0	10	1.0	7.5
8	13	1.3	9.5	23	2.3	17.0
10	29	2.9	21.0	50	5.0	36.5
12	45	4.5	32.5	85	8.5	61.5
14	65	6.5	47.0	135	13.5	98.0
16	105	10.5	76.0	210	21	152.0
18	160	16	116.0	240	24	174.0

SECTION 0B

MAINTENANCE AND LUBRICATION

WARNING:
For vehicles equipped with Supplemental Restraint (Air Bag) System:

- **Service on and around the air bag system components or wiring must be performed only by an authorized SUZUKI dealer. Refer to "Air Bag System Components and Wiring Location View" under "General Description" in air bag system section in order to confirm whether you are performing service on or near the air bag system components or wiring. Please observe all WARNINGS and "Service Precautions" under "On-Vehicle Service" in air bag system section before performing service on or around the air bag system components or wiring. Failure to follow WARNINGS could result in unintentional activation of the system or could render the system inoperative. Either of these two conditions may result in severe injury.**
- **Technical service work must be started at least 90 seconds after the ignition switch is turned to the "LOCK" position and the negative cable is disconnected from the battery. Otherwise, the system may be activated by reserve energy in the Sensing and Diagnostic Module (SDM).**

CONTENTS

MAINTENANCE SCHEDULE 0B- 2
MAINTENANCE SERVICE 0B- 5
Engine 0B- 5
Ignition System 0B-10
Fuel System 0B-11
Emission Control System 0B-12
Electrical System 0B-13
Chassis and Body 0B-13
Final Inspection 0B-23
RECOMMENDED FLUIDS AND LUBRICANTS 0B-24

MAINTENANCE SCHEDULE

MAINTENANCE SCHEDULE UNDER NORMAL DRIVING CONDITIONS

Interval: This interval should be judged by odometer reading or months, whichever comes first.	This table includes services as scheduled up to 80,000 km (48,000 miles) mileage. Beyond 80,000 km (48,000 miles), carry out the same services at the same intervals respectively.								
	km (x 1,000)	10	20	30	40	50	60	70	80
	miles (x 1,000)	6	12	18	24	30	36	42	48
	Months	6	12	18	24	30	36	42	48
ENGINE									
1-1. Drive belt		–	–	–	I	–	–	–	R
1-2. Camshaft timing belt		Replace every 100,000 km or 60,000 miles							
1-3. Valve lash (clearance)		–	–	I	–	–	I	–	–
1-4. Engine oil and oil filter		R	R	R	R	R	R	R	R
1-5. Engine coolant		–	–	–	R	–	–	–	R
1-6. Cooling system hoses and connections		–	–	–	I	–	–	–	I
1-7. Exhaust pipes and mountings (except catalyst)		–	–	–	I	–	–	–	I&(R)
IGNITION SYSTEM									
2-1. Spark plugs	When unleaded fuel is used – Vehicle without HO2S	–	R	–	R	–	R	–	R
	When unleaded fuel is used – Vehicle with HO2S	–	–	–	R	–	–	–	–
	When leaded fuel is used, refer to "Severe Driving Condition" schedule.								
2-2. Ignition wiring		–	–	–	–	–	–	–	R
FUEL SYSTEM									
3-1. Air cleaner filter element		I	I	I	R	I	I	I	R
3-2. Fuel tank cap, fuel lines and connections		–	–	–	I	–	–	–	I&(R)
3-3. Fuel filter		Replace every 200,000 km or 120,000 miles							
EMISSION CONTROL SYSTEM									
4-1. Crankcase ventilation hoses and connections		–	I	–	I	–	I	–	I
4-2. PCV valve	Vehicle without HO2S	–	–	–	I	–	–	–	I
	Vehicle with HO2S	–	–	–	–	–	–	–	I
4-3. Fuel evaporative emission control system	Vehicle without HO2S	–	I	–	I	–	I	–	I
	Vehicle with HO2S	–	–	–	–	–	–	–	I
ELECTRICAL SYSTEM									
5-1. Wiring harness and connections		–	–	–	I	–	–	–	I

NOTES:

"R": Replace or change

"I": Inspect and correct, replace or lubricate if necessary

- ***Item 1-7 (R) is applicable to exhaust mounting rubber only.***
- ***Item 3-2 (R) is applicable to fuel tank cap only.***
- ***For Sweden, item 2-1, 2-2, 4-2 and 4-3 should be performed by odometer reading only.***

Interval: This interval should be judged by odometer reading or months, whichever comes first.	This table includes services as scheduled up to 80,000 km (48,000 miles) mileage. Beyond 80,000 km (48,000 miles), carry out the same services at the same intervals respectively.								
	km (x 1,000)	10	20	30	40	50	60	70	80
	miles (x 1,000)	6	12	18	24	30	36	42	48
	Months	6	12	18	24	30	36	42	48
CHASSIS AND BODY									
6- 1. Clutch		–	I	–	I	–	I	–	I
6- 2. Brake discs and pads (front) Brake drums and shoes (rear)		–	I	–	I	–	I	–	I
6- 3. Brake hoses and pipes		–	I	–	I	–	I	–	I
6- 4. Brake fluid		–	I	–	R	–	I	–	R
6- 5. Brake pedal		–	I	–	I	–	I	–	I
6- 6. Parking brake lever and cable		–	I	–	I	–	I	–	I
6- 7. Tires		I	I	I	I	I	I	I	I
6- 8. Wheel discs		I	I	I	I	I	I	I	I
6- 9. Wheel bearings		–	I	–	*I	–	I	–	*I
6-10. Suspension system		*I	I	–	I	–	I	–	I
6-11. Propeller shafts		–	I	–	I	–	I	–	I
6-12. Manual transmission oil		I	I	I	I	R	I	I	I
6-13. Automatic transmission	Fluid level	I	I	I	I	I	I	I	I
	Fluid change	Replace every 160,000 km (100,000 miles)							
	Fluid hose	–	–	–	–	–	R	–	–
6-14. Transfer and differential oil		I	I	I	I	R	I	I	I
6-15. Steering system		I	I	I	I	I	I	I	I
6-16. Power steering (if equipped)		I	I	I	I	I	I	I	I
6-17. All hinges, latches and locks		I	I	I	I	I	I	I	I

NOTES:

"R": Replace or change

"I": Inspect and correct, replace or lubricate if necessary

- ***Item 6-9 *I is applicable to not only rattled wear but also their grease.***
- ***Item 6-10 *I should be performed at 10,000 km only.***

MAINTENANCE RECOMMENDED UNDER SEVERE DRIVING CONDITIONS

If the vehicle is usually used under the conditions corresponding to any severe condition code given below, it is recommended that applicable maintenance operation be performed at the particular interval as given in the chart below.

Severe condition code

A – Towing a trailer
B – Repeated short trips
C – Driving on rough and/or muddy roads
D – Driving on dusty roads
E – Driving in extremely cold weather and/or salted roads
F – Repeated short trips in extremely cold weather
G – Leaded fuel use

Severe Condition Code	Maintenance	Maintenance Operation	Maintenance Interval
— — C D — —	Drive belt	I	Every 12,000 miles (20,000 km) or 12 months
		R	Every 24,000 miles (40,000 km) or 24 months
A B — D E F	Engine oil and oil filter	R	Every 3,000 miles (5,000 km) or 3 months
A B C — E —	Exhaust pipes and mountings	I	Every 6,000 miles (10,000 km) or 6 months
— — — D — —	Air cleaner filter element *1	I	Every 1,500 miles (2,500 km)
		R	Every 12,000 miles (20,000 km) or 12 months
A B C D — F G	Spark plugs	R	Every 6,000 miles (10,000 km) or 6 months
A B C D — —	Brake discs and pads (Front) Brake drums and shoes (Rear)	I	Every 6,000 miles (10,000 km) or 6 months
A B C — E —	Propeller shafts	I	Every 6,000 miles (10,000 km) or 6 months
A — C — — F	Manual transmission, transfer and differential oil	R	Every 12,000 miles (20,000 km) or 12 months
A — C — — F	Automatic transmission fluid	R	Every 12,000 miles (20,000 km) or 12 months
— — C — — —	Bolts and nuts on chassis (suspension)	T	Every 6,000 miles (10,000 km) or 6 months

NOTES:

"I" : Inspect and correct, replace or lubricate if necessary "T": Tighten to the specified torque
"R": Replace or change

- ****1: Inspect or replace more frequently if the vehicle is used under dusty conditions.***

MAINTENANCE SERVICE

ENGINE

ITEM 1-1

Drive Belt Inspection and Replacement

WARNING:
All inspection and replacement are to be performed with ENGINE NOT RUNNING.

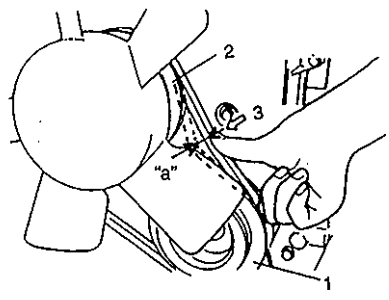

1. Crankshaft pulley
2. Water pump pulley
3. 100 N (10 kg, 22 lb)

Water pump and generator drive belt

Inspection

1) Disconnect negative cable at battery.
2) Inspect belt for cracks, cuts, deformation, wear and cleanliness. If any defect exists, replace.
   Check belt for tension.

   Water pump and generator belt tension
   "a": 6 – 8 mm (0.24 – 0.32 in.) deflection under 100 N (10 kg, 22 lb) pressure

   NOTE:
   When replacing belt with a new one, adjust belt tension to 5 – 7 mm (0.20 – 0.27 in.).

3) If belt is too tight or too loose, adjust it to specification by adjusting alternator position.
4) Tighten alternator adjusting bolt and pivot bolts.
5) Connect negative cable to battery.

Replacement

Replace belt. Refer to Section 6B for replacement procedure of pump belt.

Power steering pump and/or A/C compressor drive belts (if equipped).

Inspection and Replacement

1) Disconnect negative cable at battery.
2) Inspect belt for cracks, cuts, deformation, wear and cleanliness. If any defect exists, replace.

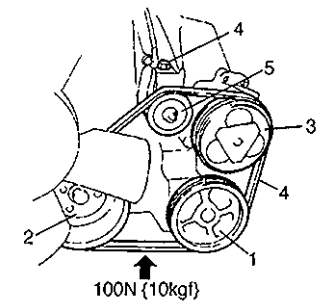

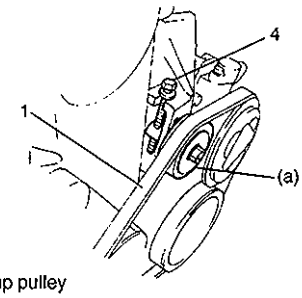

1. P/S pump pulley
2. Crankshaft pulley
3. A/C compressor pulley (if equipped)
4. Tension adjust bolt
5. Belt tension pulley

3) Check belt for tension.
Power steering pump and/or A/C compressor drive belt tension
6 – 9 mm (0.24 – 0.35 in.) deflection under 100 N (10 kg, 22 lb) pressure.
4) If belt tension is out of above specification, adjust it by turning tension adjust bolt.
   a) Loosen tension pulley nut.
   b) Adjust belt tension to above specification by turning tension adjust bolt.
   c) Then tighten belt tension pulley nut to specified torque.
   Tightening Torque
   (a): 50 N·m (5.0 kg-m, 36.5 lb-ft)
5) Connect negative cable to battery.

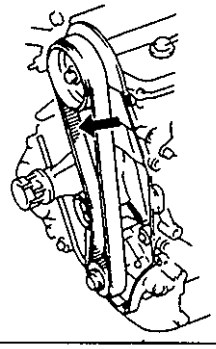

ITEM 1-2

Camshaft Timing Belt Replacement

Replace timing belt referring to Section 6A.

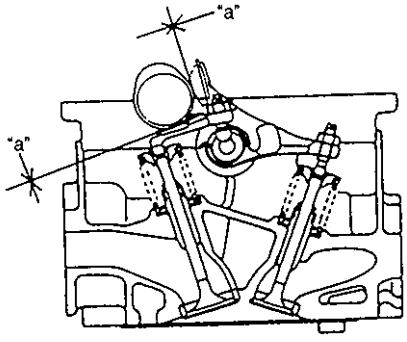

ITEM 1-3

Valve Lash Inspection

1) Remove cylinder head cover.
2) Inspect intake and exhaust valve lash and adjust as necessary. Refer to Section 6A for valve lash inspection and adjustment procedure.

		When cold (Coolant temperature is 15 – 25°C or 59 – 77°F)	When hot (Coolant temperature is 60 – 68°C or 140 – 154°F)
Valve lash (gap "a") specification	Intake	0.13 – 0.17 mm (0.005 – 0.007 in)	0.17 – 0.21 mm (0.007 – 0.008 in)
	Exhaust	0.23 – 0.27 mm (0.009 – 0.011 in)	0.27 – 0.31 mm (0.011 – 0.012 in)

3) Install cylinder head cover and tighten bolts to specification.

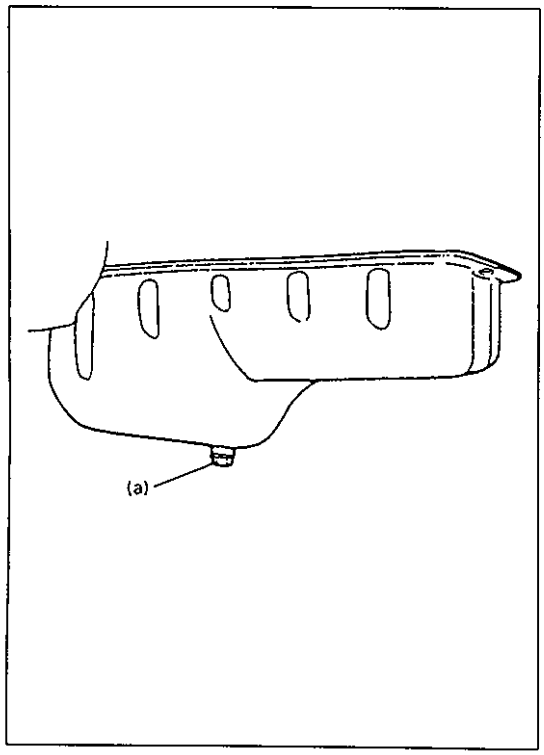

ITEM 1-4
Engine Oil and Filter Change

WARNING:
New and used engine oil can be hazardous.
Be sure to read "WARNING" in General Precaution in Section 0A and observe what in written there.

Before draining engine oil, check engine for oil leakage. If any evidence of leakage is found, make sure to correct defective part before proceeding to the following work.

1) Drain engine oil by removing drain plug.
2) After draining oil, wipe drain plug clean. Reinstall drain plug, and tighten it securely as specified below.
   Tightening Torque
   (a): 35 N·m (3.5 kg-m, 25.5 lb-ft)

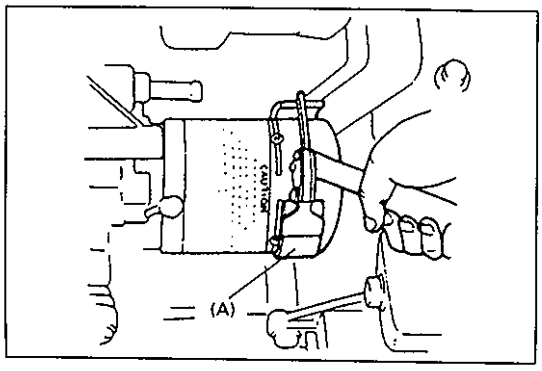

3) Loosen oil filter by using oil filter wrench (special tool).
   Special Tool
   (A): 09915-47330

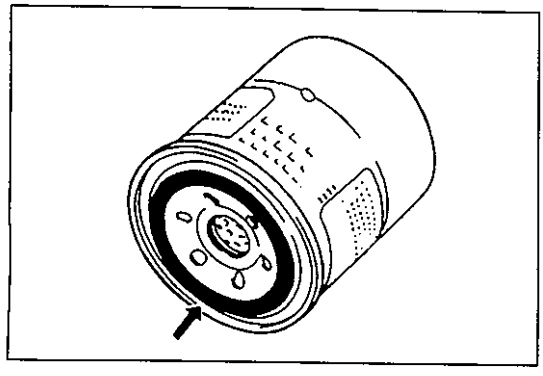

NOTE:
Before fitting new oil filter, be sure to oil its O-ring. Use engine oil for this purpose.

4) Screw new filter on oil filter stand by hand until the filter O-ring contacts the mounting surface.

CAUTION:
To tighten oil filter properly, it is important to accurately identify the position at which at filter O-ring first contacts the mounting surface.

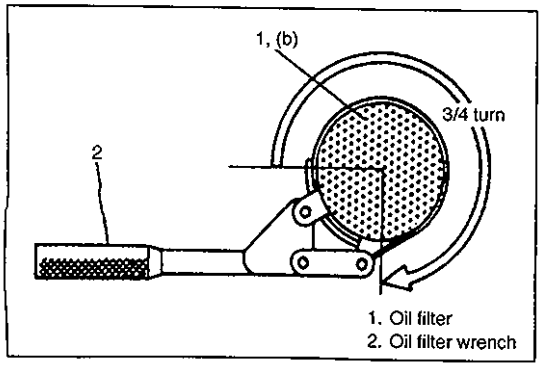

5) Tighten the filter 3/4 turn from the point of contact with the mounting surface using an oil filter wrench.
   Tightening Torque (Reference)
   (b): 14 N·m (1.4 kg-m, 10.5 lb-ft)

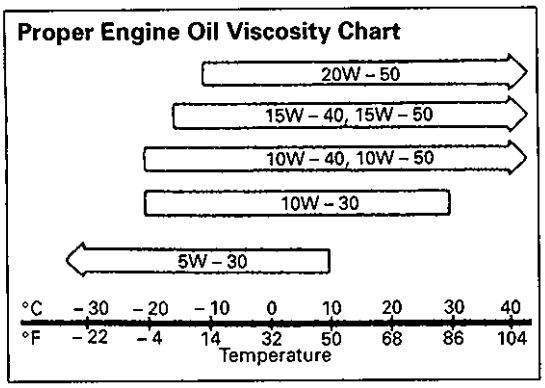

Oil pan capacity	About 4.0 liters (10.6/8.8 US/Imp pt.)
Oil filter capacity	About 0.2 liters (0.4/0.3 US/Imp pt.)
Others	About 0.3 liters (0.6/0.5 US/Imp pt.)
Total	About 4.5 liters (9.5/7.9 US/Imp pt.)

6) Replenish oil until oil level is brought to FULL level mark on dipstick. (oil pan and oil filter capacity). The filler inlet is at the top of the cylinder head cover.
It is recommended to use engine oil of SE, SF, SG, SH or SJ grade.

NOTE:
For temperature between –20°C (–4°F) and 30°C (86°F), it is highly recommended to use SAE 10W – 30 oil.

NOTE:
Engine oil capacity is specified. However, note that the amount of oil required when actually changing oil may somewhat differ from the data in the table depending on various conditions (temperature, viscosity, etc.)

7) Check oil filter and drain plug for oil leakage.

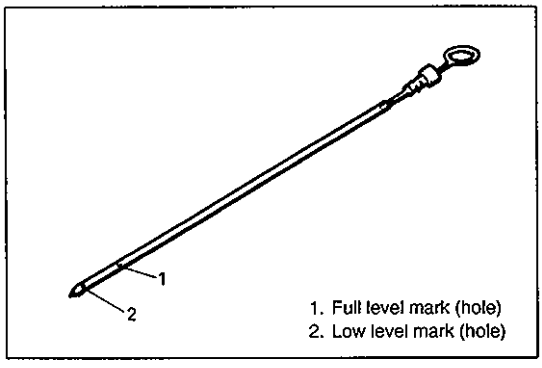

8) Start engine and run it for three minutes. Stop it and wait five minutes before checking oil level. Add oil, as necessary, to bring oil level to FULL level mark on dipstick.

NOTE:
Step 1) – 7) outlined above must be performed with ENGINE NOT RUNNING. For step 8), be sure to have adequate ventilation while engine is running.

ITEM 1-5
Engine Coolant Change

WARNING:
To help avoid danger of being burned, do not remove radiator cap while engine and radiator are still hot. Scalding fluid and steam can be blown out under pressure if cap is taken off too soon.

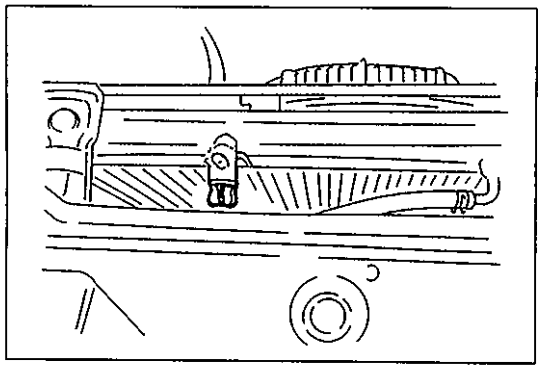

1) Remove radiator cap when engine is cool.
2) Loosen radiator drain plug to drain coolant.
3) Remove reservoir, which is on the side of radiator, and drain.
4) Tighten plug securely. Also reinstall reservoir.

5) Fill radiator with specified amount of coolant, and run engine for 2 or 3 minutes at idle. This drives out any air which may still be trapped within cooling system. STOP ENGINE. Add coolant as necessary until coolant level reaches the filler throat of radiator. Reinstall radiator cap.

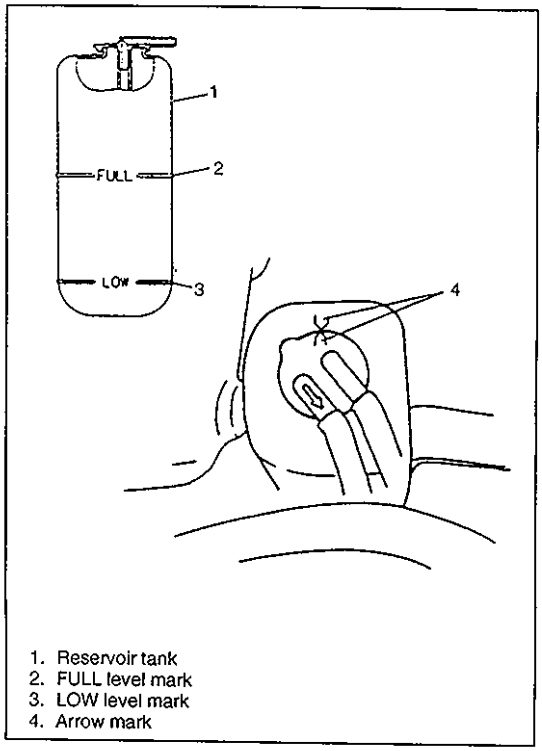

1. Reservoir tank
2. FULL level mark
3. LOW level mark
4. Arrow mark

6) Add coolant to reservoir so that its level aligns with Full mark. Then, reinstall cap aligning arrow marks on reservoir and cap.

NOTE:
When installing reservoir cap, align arrow marks on reservoir and cap.

CAUTION:
When changing engine coolant, use mixture of 50% water and 50% ANTIFREEZE/ANTICORROSION COOLANT for the market where ambient temperature falls lower than –16°C (3°F) in winter, and mixture of 70% water and 30% ANTIFREEZE/ANTICORROSION COOLANT for the market where ambient temperature doesn't fall lower than –16°C (3°F).
Even in a market where no freezing temperature is anticipated, mixture of 70% water and 30% ANTIFREEZE/ANTICORROSION COOLANT should be used for the purpose of corrosion protection and lubrication.

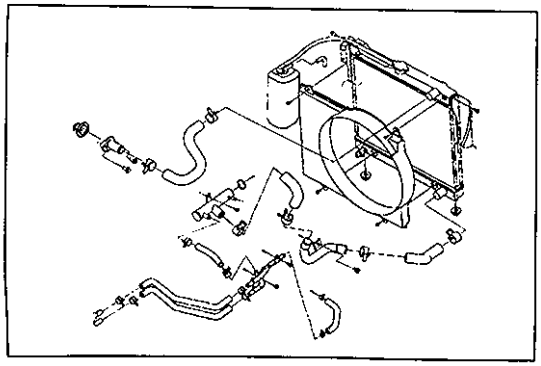

ITEM 1-6

Cooling System Hoses and Connections Inspection

1) Visually inspect cooling system hoses for any evidence of leakage and cracks. Examine them for damage, and check connection clamps for tightness.
2) Replace all hoses which show evidence of leakage, cracks or other damage. Replace all clamps which cannot maintain proper tightness.

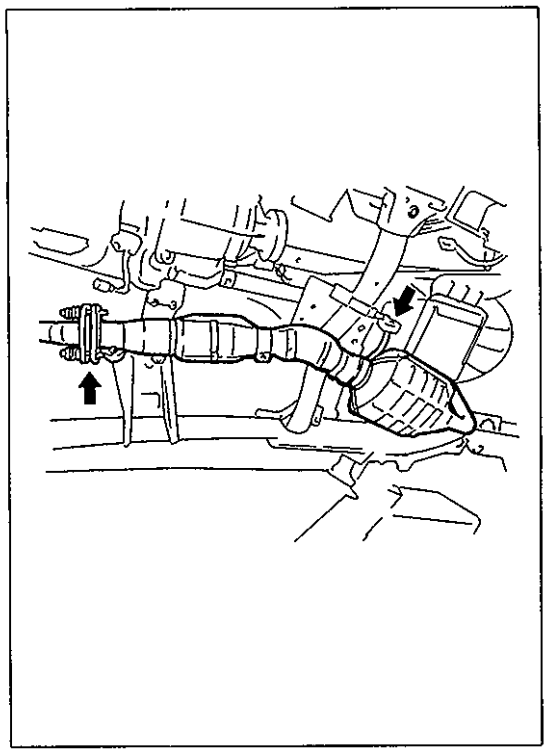

ITEM 1-7

Exhaust Pipes and Mountings Inspection

> **WARNING:**
> **To avoid danger of being burned, do not touch exhaust system when it is still hot. Any service on exhaust system should be performed when it is cool.**

When carrying out periodic maintenance, or the vehicle is raised for other service, check exhaust system as follows:

- Check rubber mountings for damage, deterioration, and out of position.
- Check exhaust system for leakage, loose connections, dents and damages.
  If bolts or nuts are loose, tighten them to specification.
- Check nearby body areas for damaged, missing, or mispositioned parts, open seams, holes, loose connections or other defects which could permit exhaust fumes to seep into the vehicle.

- Make sure that exhaust system components have enough clearance from the underbody to avoid overheating and possible damage to the floor carpet.
- Any defects should be fixed at once.

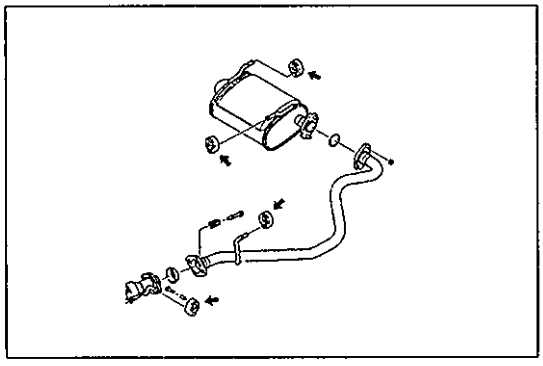

Mounting replacement

Replace muffler rubber mountings with new ones periodically. Refer to Section 6K for installation.

IGNITION SYSTEM

ITEM 2-1

Spark Plugs Replacement

Replace spark plugs with new ones referring to Section 6F.

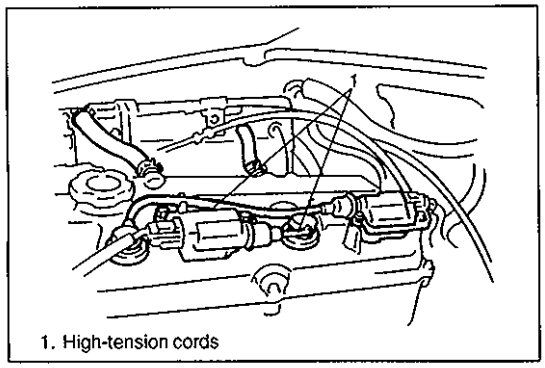
1. High-tension cords

ITEM 2-2
Ignition Wiring Replacement
1) Disconnect negative cable at battery.
2) Replace high-tension cords for No.1 and No.3 plugs with new ones.
3) Clamp it securely.
4) Connect negative cable to battery.

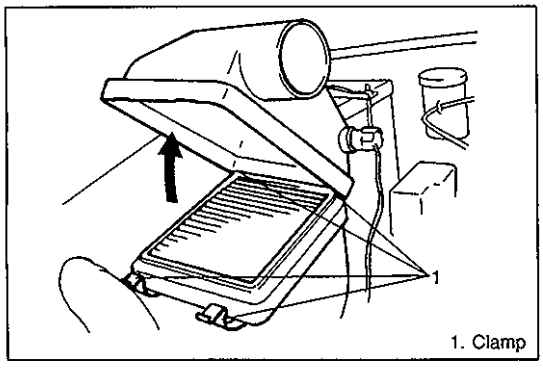
1. Clamp

FUEL SYSTEM

ITEM 3-1
Air Cleaner Element
Inspection
1) Remove air cleaner case clamps.
2) Take cleaner element out of air cleaner case.
3) Check air cleaner element for dirt. Replace excessively dirty element.

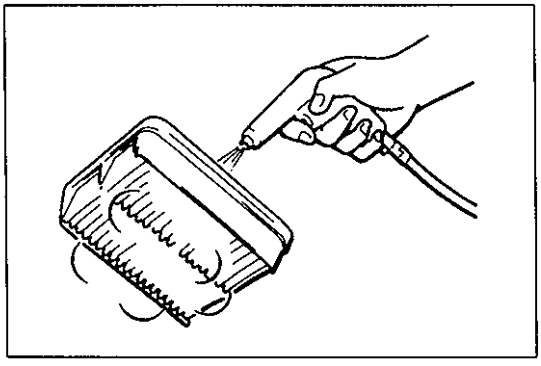

4) Blow off dust by compressed air from air outlet side of element.
5) Install air cleaner element into case.
6) Install air cleaner case cap and clamp it securely.

Replacement
Replace air cleaner element with new one according to above steps 1), 2) and 5), 6).

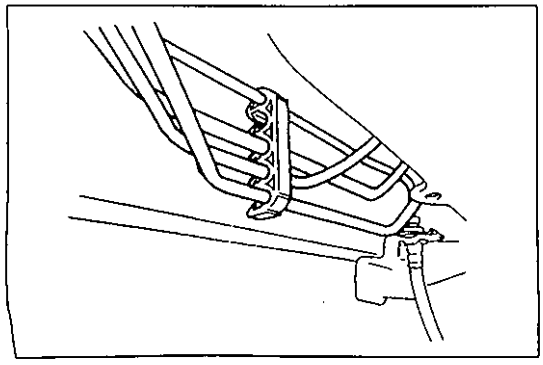

ITEM 3-2
Fuel tank Cap, Fuel Lines and Connections
Inspection
1) Visually inspect fuel lines and connections for evidence of fuel leakage, hose cracking and damage. Make sure all clamps are secure.
   Repair leaky joints, if any.
   Replace hoses that are suspected of being cracked.

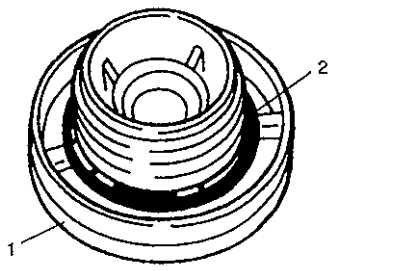

1. Fuel filter cap
2. Fuel filter cap gasket

2) Visually inspect gasket of fuel tank cap. If it is damaged or deteriorated, replace it with new one.

Fuel tank cap replacement

Replace tank cap with new one periodically.

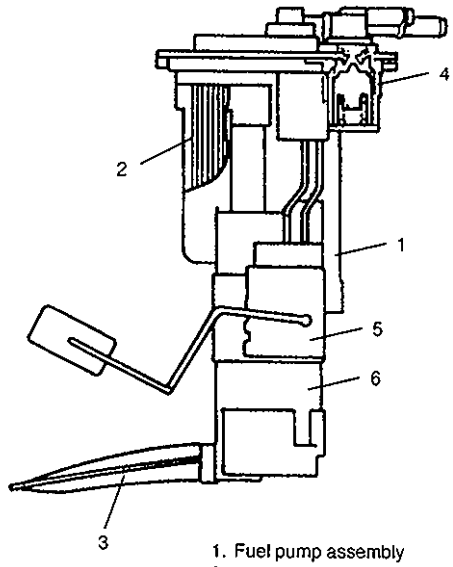

1. Fuel pump assembly
2. Fuel filter
3. Suction filter (pump filter)
4. Fuel cut valve
5. Fuel sender (level) gauge
6. Fuel pump

ITEM 3-3

Fuel Filter Replacement

WARNING:
This work must be performed in a well ventilated area and away from any open flames (such as gas hot water heaters).

Fuel filter is a part of fuel pump assembly which is installed on fuel tank.

Replace fuel filter with new one periodically, referring to Section 6C for proper procedure.

EMISSION CONTROL SYSTEM

ITEM 4-1

Crankcase Ventilation Hoses and Connections Inspection

Refer to following item 4-2, PCV valve inspection.

ITEM 4-2

PCV (Positive Crankcase Ventilation) Valve Inspection

Check crankcase ventilation hose and PCV hose for leaks, cracks or clog, and PCV valve for stick or clog. Refer to "On-Vehicle Service" of Section 6E for PCV valve checking procedure.

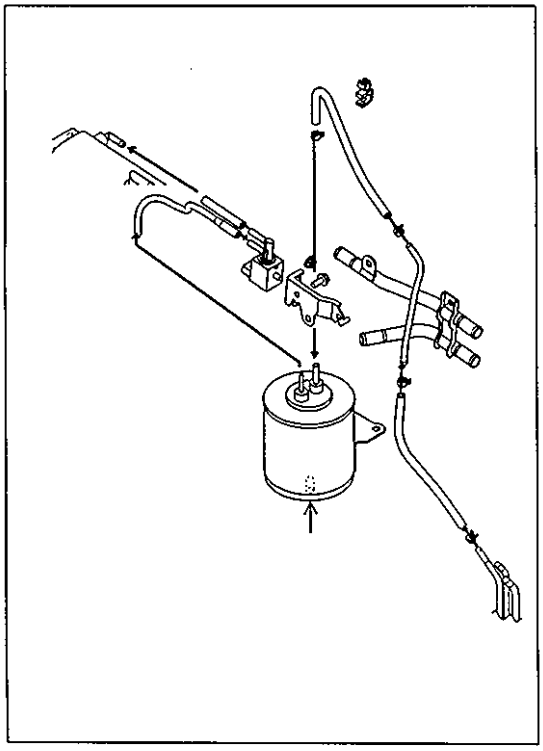

ITEM 4-3

Fuel Evaporative Emission Control System Inspection

1) Visually inspect hoses for cracks, damage, or excessive bends. Inspect all clamps for damage and proper position.
2) Check evaporative emission control system for operation, referring to Section 6E.
3) Check EVAP canister for operation and clog, referring to Section 6E.
4) Check tank pressure control valve for operation referring to Section 6E.

ELECTRICAL SYSTEM

ITEM 5-1

Wiring Harness and Connections Inspection

1) Visually inspect all wires in engine compartment for evidence of breakage.
   Inspect condition of insulation (cracks). All clips and clamps should have solid connection to wires.
2) Replace any wires in a deteriorated or otherwise defective condition.

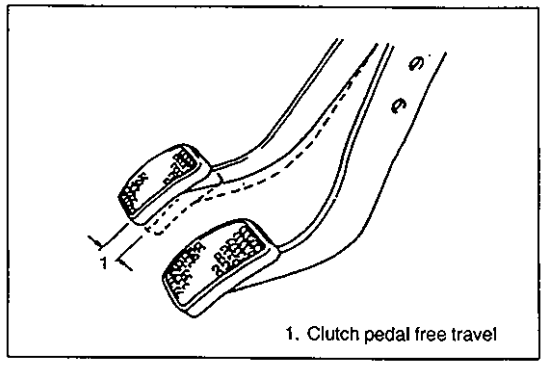

1. Clutch pedal free travel

CHASSIS AND BODY

ITEM 6-1

Clutch

Pedal inspection

Check clutch pedal for height and free travel referring to Section 7C. Adjust or correct if necessary.

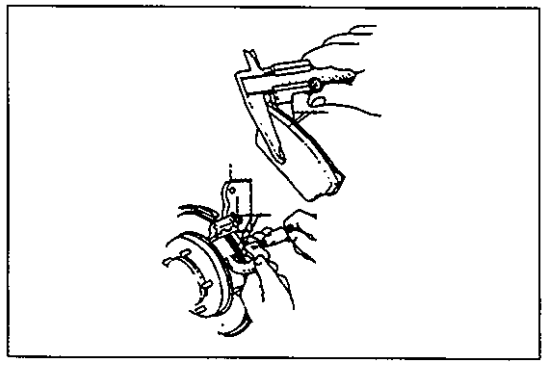

ITEM 6-2

Brake Discs, Pads, Brake Drums and Shoes Inspection

[Brake discs and pads]

1) Remove wheel and caliper but don't disconnect brake hose from caliper.
2) Check front disc brake pads and discs for excessive wear, damage and deflection. Replace parts as necessary. For details, refer to Section 5.
   Be sure to torque caliper pin bolts to specification.

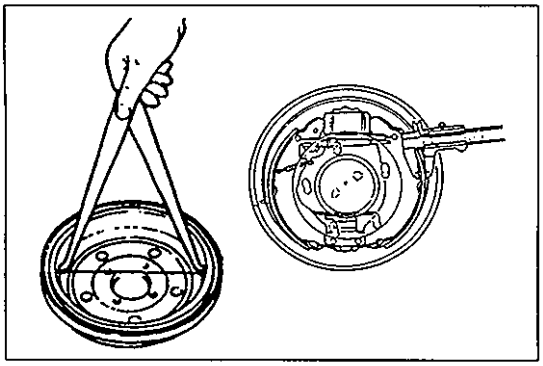

[Brake drums and shoes]

1) Remove wheel and brake drum.
2) Check rear brake drums and brake linings for excessive wear and damage, while wheels and drums are removed. At the same time, check wheel cylinders for leaks. Replace these parts as necessary.
   For details, refer to Section 5.

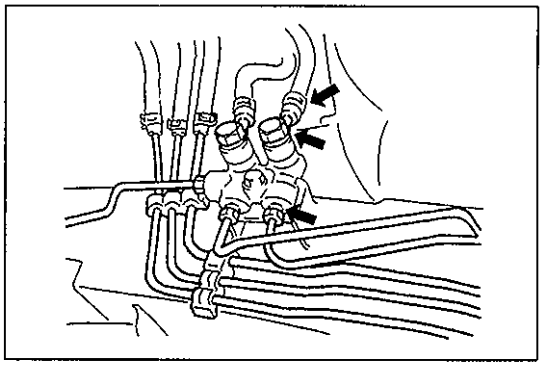

ITEM 6-3

Brake Hoses and Pipes Inspection

Check brake hoses and pipes for proper hookup, leaks, cracks, chafing and other damage.
Replace any of these parts as necessary.

> **CAUTION:**
> **After replacing any brake pipe or hose, be sure to carry out air purge operation.**

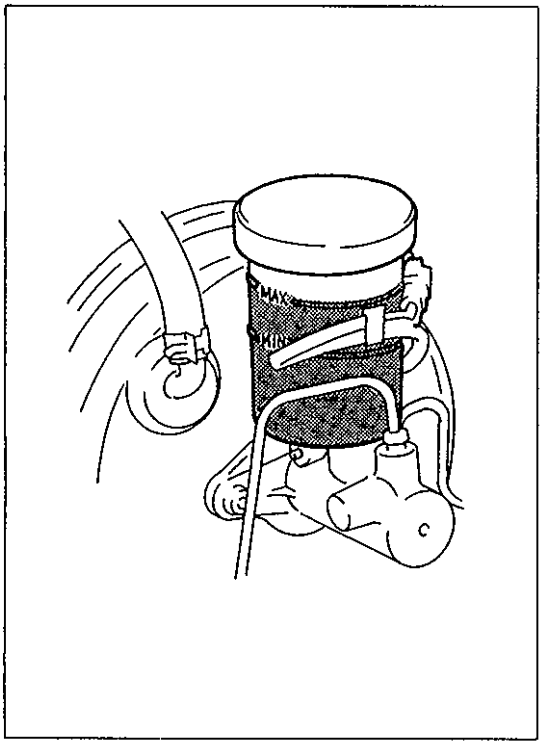

ITEM 6-4

Brake Fluid

Inspection

1) Check around master cylinder and reservoir for fluid leakage.
   If found leaky, correct.
2) Check fluid level.
   If fluid level is lower than the minimum level of reservoir, refilling is necessary. Fill reservoir with specified brake fluid indicated on reservoir cap.
   For the details, refer to "On-Vehicle Service" in Section 5.

> **CAUTION:**
> **Since brake system of this vehicle is factory-filled with glycol-base brake fluid, do not use or mix different type of fluid when refilling system; otherwise serious damage will occur. Do not use old or used brake fluid, or one taken from unsealed container.**

Change

Change brake fluid as follows.
Drain existing fluid from brake system completely, fill system with above recommended fluid and carry out air purge operation.
For air purging procedure, refer to Section 5.

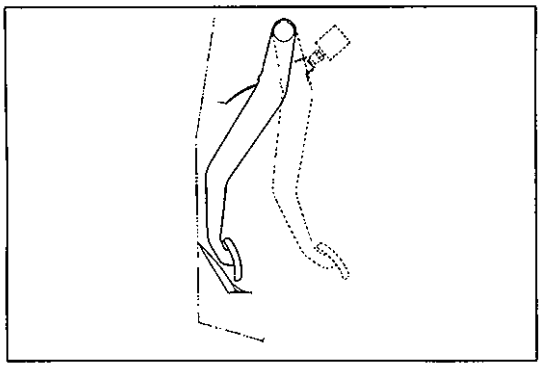

ITEM 6-5

Brake Pedal Inspection

Check brake pedal travel referring Section 5.

ITEM 6-6

Parking Brake Lever and Cable Inspection

Parking brake lever

1) Check tooth tip of each notch for damage or wear. If any damage or wear is found, replace parking lever.

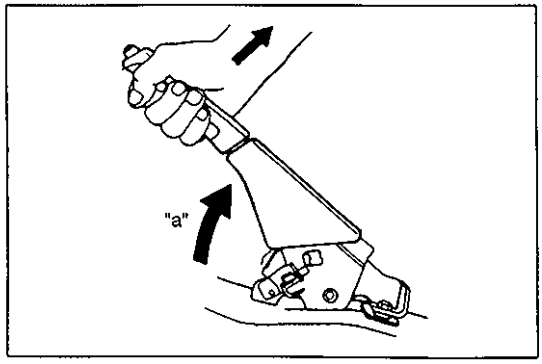

2) Check parking brake lever for proper operation and stroke, and adjust it if necessary.
   For checking and adjusting procedures, refer to PARKING BRAKE INSPECTION AND ADJUSTMENT in Section 5.

   "a": Parking brake lever stroke: 6 – 8 notches (with 20 kg (44 lbs) of pull pressure)

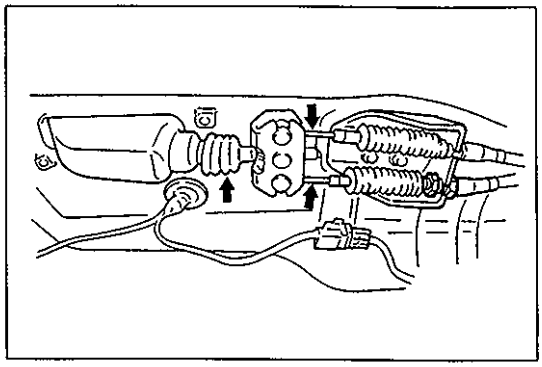

Parking brake cable

Inspect brake cable for damage and smooth movement.
Replace cable if it is in deteriorated condition.

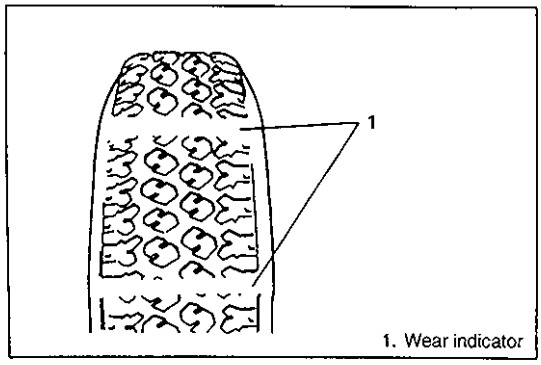

ITEM 6-7

Tire Inspection and Rotation

1) Check tires for uneven or excessive wear, or damage.
   If defective, replace.
   Refer to Section 3 for details.

2) Check inflating pressure of each tire and adjust pressure to specification as necessary.
   Refer to Section 3F for details.

   NOTE:
   - **Tire inflation pressure should be checked when tires are cool.**
   - **Specified tire inflation pressure should be found on tire placard or in owner's manual which came with the vehicle.**

3) Rotate tires.
   For details, refer to Section 3F.

ITEM 6-8

Wheel Discs Inspection

Inspect each wheel disc for dents, distortion and cracks. A disc in badly damaged condition must be replaced.

ITEM 6-9

Wheel Bearing Inspection

Inspection of wheel bearing

1) Check front wheel bearing for wear, damage, abnormal noise or rattles. For details, refer to FRONT SUSPENSION INSPECTION in Section 3D.
2) Check rear wheel bearing for wear, damage, abnormal noise or rattles. For details, refer to WHEEL DISK, NUT & BEARING of REAR SUSPENSION INSPECTION in Section 3E.

Inspection of front wheel bearing grease

1) Remove wheel hub referring to WHEEL HUB/BEARING/OIL SEAL REMOVAL in Section 3D.

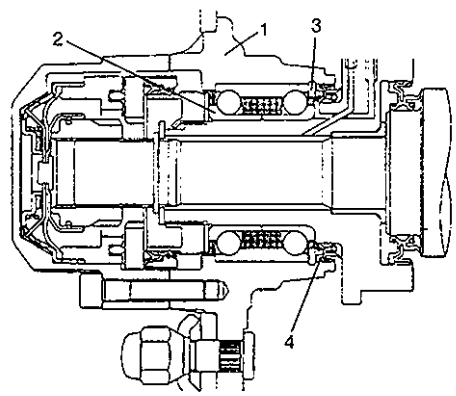

1. Wheel hub
2. Wheel bearing
3. Circlip
4. Wheel bearing oil seal

2) Check grease around front wheel bearing rollers for deterioration and capacity.
   If grease is deteriorated, remove grease thoroughly and apply enough amount of new wheel bearing grease. If grease is found insufficient, add some more.
3) For reinstallation, refer to WHEEL HUB/BEARING/OIL SEAL INSTALLATION in Section 3D.

NOTE:
- **To reinstall bearing lock nut and lock plate, make sure to torque them to specification.**
- **Be sure to tighten each bolt and nut to specified torque when reinstalling them.**

4) Upon completion of reinstalling all parts, check to make sure that front wheel bearing is not loose and wheel turns smoothly.

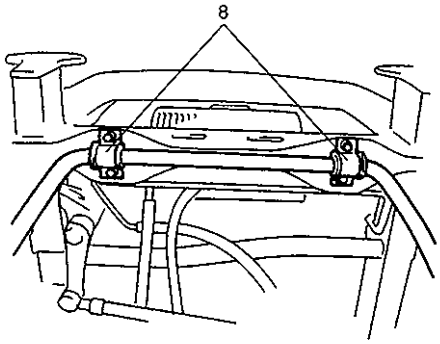

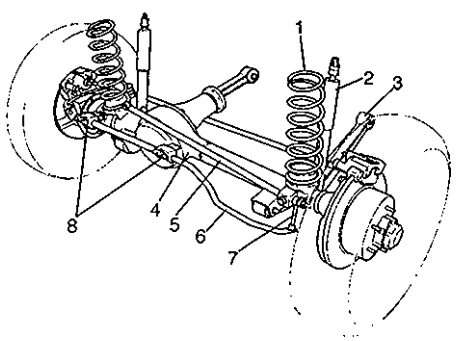

1. Coil spring
2. Shock absorber
3. Leading arm
4. Front axle housing
5. Lateral rod
6. Stabilizer bar
7. Ball joint
8. Bushing

ITEM 6-10

Suspension Inspection

Check suspension bolts and nuts for tightness and retighten them as necessary.
Repair or replace defective parts, if any.

NOTE:
For details of check points, refer to tables of TIGHTENING TORQUE SPECIFICATION in Section 3D and 3E.

Front

1) Check stabilizer bar for damage or deformation.
2) Check bushing for damage, wear or deterioration.
3) Check coil spring, lateral rod and leading arm for deformation and damage.
4) Check lateral rod and leading arm bushings for wear, damage and deterioration.
5) Inspect absorbers for evidence of oil leakage, dents or any other damage on sleeves; and inspect anchor ends for deterioration.
6) Inspect for cracks or deformation in spring seat.
7) Inspect for deterioration of bump stopper.

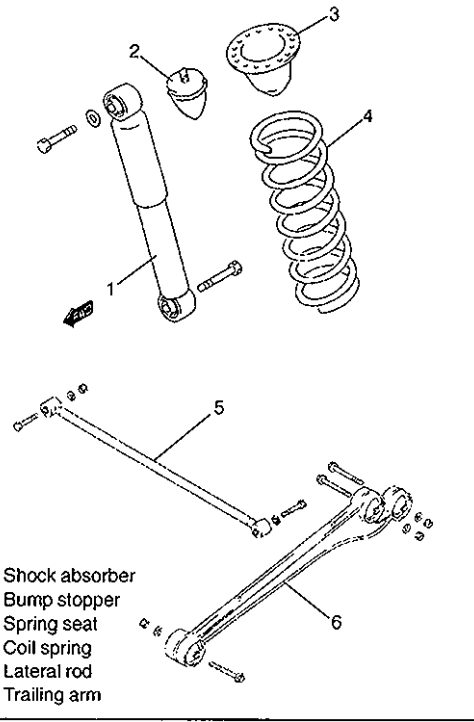

Rear

1) Check shock absorber for damage, deformation, oil leakage and operation.

> **WARNING:**
> **When handling rear shock absorber in which high-pressure gas is sealed, make sure to observe the following precautions.**
> **1) Don't disassemble it.**
> **2) Don't put it into the fire.**
> **3) Don't store it where it gates hot.**
> **4) Before disposing it, be sure to drill a hole in it where shown by an arrow in figure and let gas and oil out. Lay it down sideways for this work.**
> **5) The gas itself is harmless but it may issue out of the hole together with chips generated by the drill. Therefore, be sure to wear goggle.**

2) Check bushings for wear and damage.
3) Check coil spring, trailing arm and lateral rod for deformation and damage.
4) Check trailing arm and lateral rod bushings and bump stopper for wear, damage and deterioration.
5) Check other suspension parts for damage, loose or missing parts; also for parts showing signs of wear or lack of lubrication.

Replace any parts found defective in steps 1) to 5).

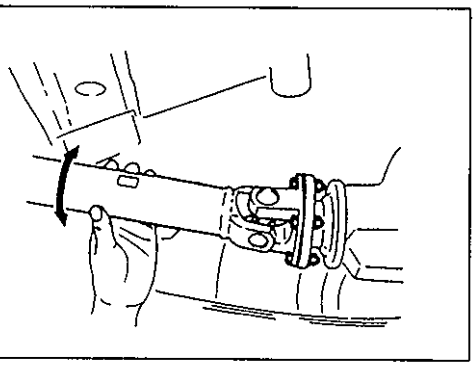

ITEM 6-11

Propeller Shafts

Inspection

1) Check universal joint and spline of propeller shaft for rattle. If rattle is found, replace defective part with a new one.
2) Check propeller shaft (front & rear) flange yoke bolts for tightness, and retighten them as necessary.
   Refer to Section 4B for tightening torque.

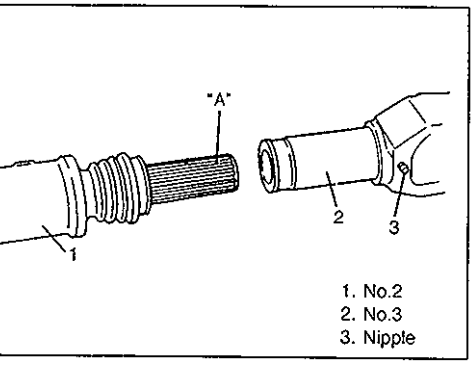

Lubrication

Grease splines of propeller shaft No. 2 and No. 3.

"A": Chassis Grease

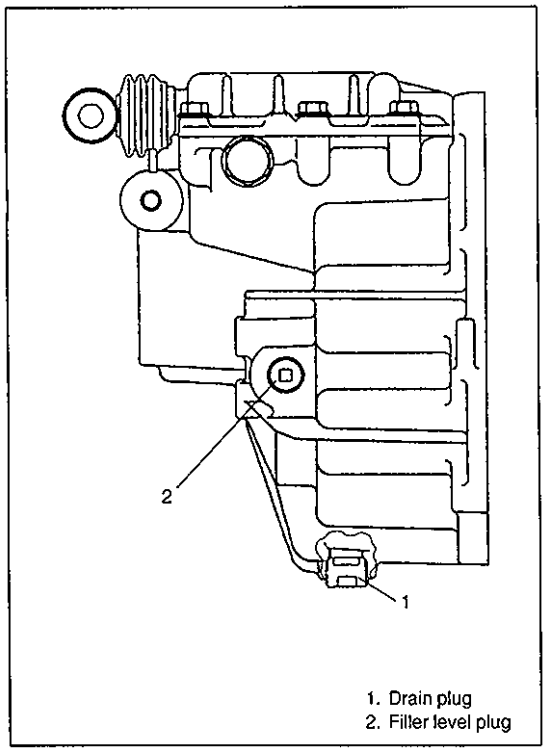

1. Drain plug
2. Filler level plug

ITEM 6-12
Manual Transmission Oil
Inspection

1) Inspect transmission case for evidence of oil leakage.
   Repair leaky point if any.
2) Make sure that vehicle is placed level for oil level check.
3) Remove level plug of transmission.
4) Check oil level.
   Oil level can be checked roughly by means of level plug hole. That is, if oil flows out of level plug hole or if oil level is found up to hole when level plug is removed, oil is properly filled.
   If oil is found insufficient, pour specified amount of specified oil.
5) Tighten level plug to specified torque.
   Refer to Section 7A for installation and tightening torque.

Change

Change transmission oil with new specified oil referring to Section 7A.

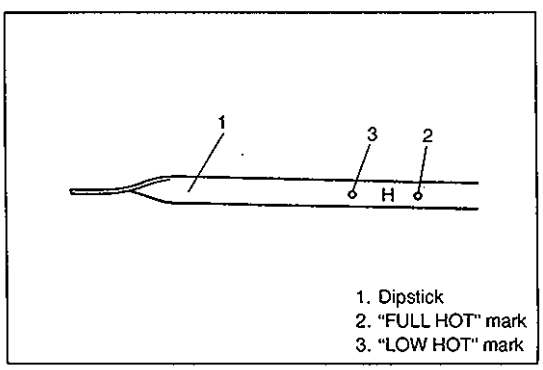

1. Dipstick
2. "FULL HOT" mark
3. "LOW HOT" mark

ITEM 6-13
Automatic Transmission Fluid
Inspection

1) Inspect transmission case for evidence of fluid leakage.
   Repair leaky point, if any.
2) Make sure that vehicle is placed level for fluid level check.
3) Check fluid level.
   For fluid level checking procedure, refer to "On-Vehicle Service" in Section 7B and be sure to perform it under specified conditions. If fluid level is low, replenish specified fluid.

Change

1) Inspect transmission case for evidence of fluid leakage.
   Repair leaky point, if any.
2) Make sure that vehicle is placed level for fluid level check.
3) Change fluid. For its procedure, refer to "On-Vehicle Service" in Section 7B.

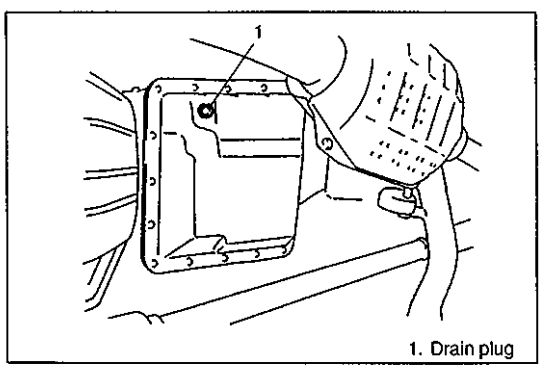

1. Drain plug

CAUTION:
Use of specified fluid is absolutely necessary.

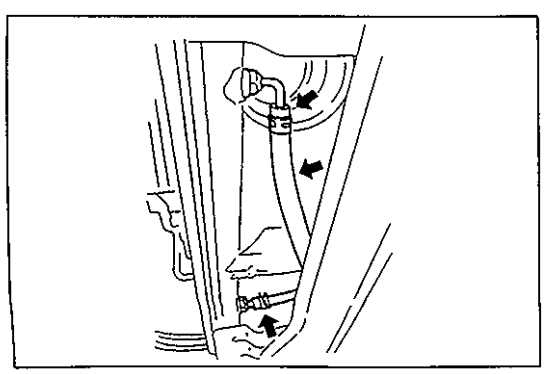

Fluid cooler hose change

Replace inlet and outlet hoses of cooler hose and their clamps. For replacement procedure, refer to "On-Vehicle Service" in Section 7B.

Transfer

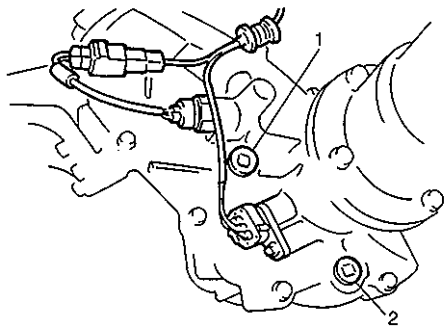

Front differential

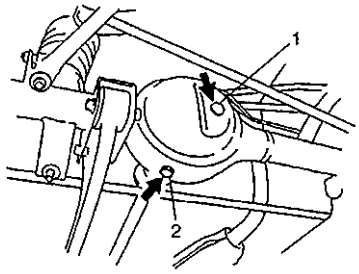

Rear differential

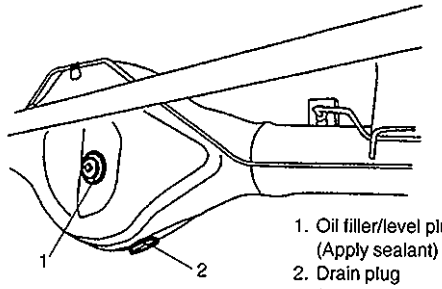

1. Oil filler/level plug (Apply sealant)
2. Drain plug (Apply sealant)

ITEM 6-14

Transfer and Differential Oil

Inspection

1) Check transfer case and differential for evidence of oil leakage. Repair leaky point if any.
2) Make sure that vehicle is placed level for oil level check.
3) Remove level plug of transfer and differentials (front and rear) and check oil level.
   Oil level can be checked roughly by means of level plug hole. That is, if oil flows out of level plug hole or if oil level is found up to hole when level plug is removed, oil is properly filled.
   If oil is found insufficient, pour specified amount of specified oil.

> **CAUTION:**
> **Specified gear oil must be used for differential.**

4) Tighten level plug to specified torque.
   Refer to Section 7D or 7E for tightening torque.

Change

Change transfer oil and differentials oil with new specified oil referring to Section 7D and 7E respectively.

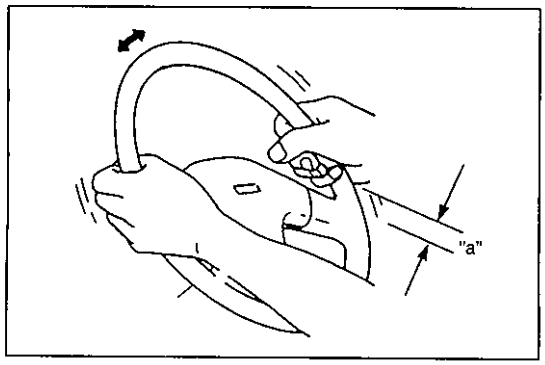

ITEM 6-15

Steering System Inspection

1) Check steering wheel for play and rattle, holding vehicle in straight forward condition on the ground.

   Steering wheel play "a": 0 – 30 mm (0 – 1.2 in.)

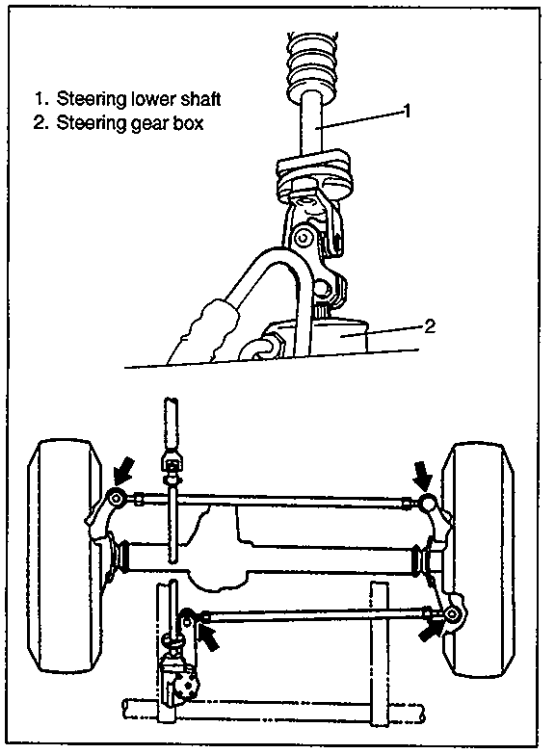

2) Check universal joints of steering lower shaft for rattle and damage. If rattle or damage is found, replace defective part with a new one.
3) Check steering linkage for looseness and damage. Repair or replace defective part, if any.
4) Check bolts and nuts for tightness and retighten them as necessary. Repair or replace defective parts, if any.
   Refer to table of TIGHTENING TORQUE SPECIFICATION in Section 3B (or 3B1) and 3C for particular check points.
5) Inspect steering gear box for evidence of oil leakage. If leakage is found, check oil level in gear box.
6) Check boots of steering linkage for damage (leaks, detachment, tear, dent, etc.). If damage is found, replace defective boot with new one.
7) Check wheel alignment.

NOTE:
For details of wheel alignment, refer to WHEEL ALIGNMENT of SECTION 3A.

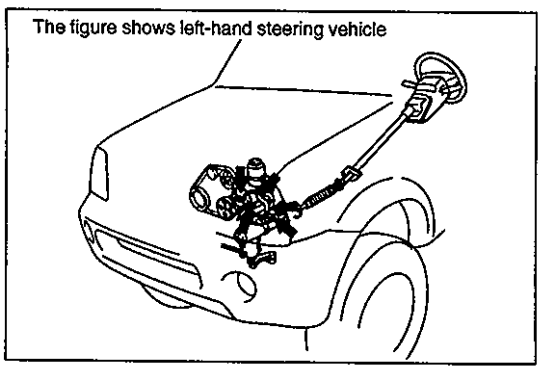

ITEM 6-16

Power Steering (P/S) System Inspection (if equipped)

1) Visually check power steering system for fluid leakage and hose for damage and deterioration.
   Repair or replace defective parts, if any.

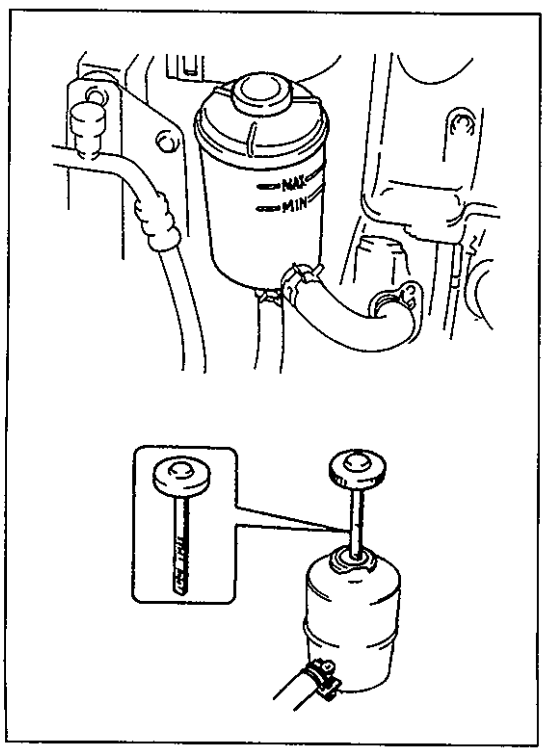

2) With engine stopped, check fluid level indicated on fluid tank or level gauge of tank cap, which should be between MAX and MIN marks. If it is lower than MIN, fill fluid up to MAX mark.
   NOTE:
   - **Be sure to use an equivalent of DEXRON®-II, DEXRON®-IIE or DEXRON®-III for P/S fluid.**
   - **Fluid level should be checked when fluid is cool.**

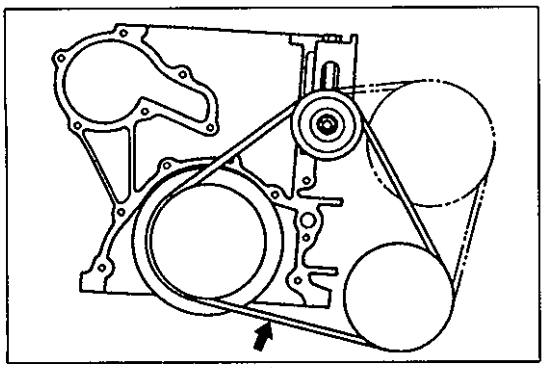

3) Visually check pump drive belt for cracks and wear.
4) Check belt for tension, referring to Item 1-1.
   If necessary, have belt adjusted or replaced.

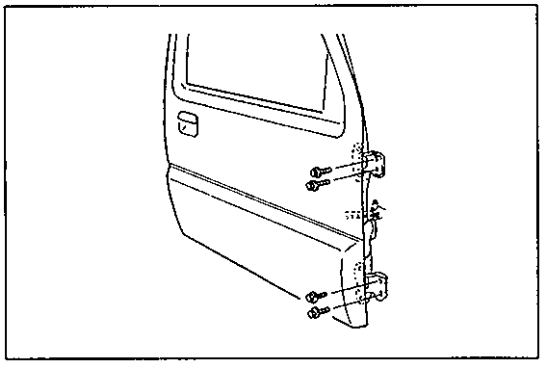

ITEM 6-17

All Hinges, Latches and Locks Inspection

Doors

Check that each door of front and back doors opens and closes smoothly and locks securely when closed.
If any malfunction is found, lubricate hinge and latch or repair door lock system.

Engine hood

Check that secondary latch operates properly (check that secondary latch keeps hood from opening all the way even when pulling hood release handle inside vehicle.) Also check that hood opens and closes smoothly and properly and hood locks securely when closed.
If any malfunction is found, lubricate hinge and latch, or repair hood lock system.
Tighten hood latch bolt to specified torque.

Tightening torque for hood latch bolt
10 N·m (1.0 kg-m, 7.5 lb-ft)

FINAL INSPECTION

WARNING:
When carrying out road tests, select a safe place where no man or no running vehicle is seen so as to prevent any accident.

Seats
Check that seat slides smoothly and locks securely at any position. Also check that reclining mechanism of front seat back allows it to be locked at any angle.

Seat Belt
Inspect belt system including webbing, buckles, latch plates, retractors and anchors for damage or wear.
If "REPLACE BELT" label on front seat belt is visible, replace belt.
Check that seat belt is securely locked.

Battery Electrolyte Level Check
Check that the electrolyte level of all battery cells is between the upper and lower level lines on the case.
If battery is equipped with built-in indicator, check battery condition by the indicator.

Accelerator Pedal Operation
Check that pedal operates smoothly without getting caught or interfered by and other part.

Engine Start
Check engine start for readiness.

WARNING:
Before performing the following check, be sure to have enough room around the vehicle. Then, firmly apply both the parking brake and the regular brakes. Do not use the accelerator pedal. If the engine starts, be ready to turn off the ignition promptly. Take these precautions because the vehicle could move without warning and possibly cause personal injury or property damage.

On automatic transmission vehicles, try to start the engine in each select lever position. The starting motor should crank only in "P" (Park) or "N" (Neutral).
On manual transmission vehicles, place the shift lever in "Neutral," depress clutch pedal fully and try to start.

Exhaust System Check
Check for leakage, cracks or loose supports.

Clutch (For Manual transmission)
Check for the following.
- Clutch is completely released when depressing clutch pedal,
- No slipping clutch occurs when releasing pedal and accelerating.
- Clutch itself is free from any abnormal condition.

Gearshift or Selector Lever (Transmission)
Check gear shift or selector lever for smooth shifting to all positions and for good performance of transmission in any position.
With automatic transmission equipped vehicle, also check that shift indicator indicates properly according to which position selector lever is shifted to.

CAUTION:
With automatic transmission equipped vehicle, make sure that vehicle is at complete stop when shifting selector lever to "P" range position and release all brakes.

Brake
[Foot brake]
Check the following:
- that brake pedal has proper travel,
- that brake works properly,
- that it is free from noise,
- that braking force is applied equally on all wheels,
- and that brake do not drag.

[Parking brake]
Check that lever has proper travel.

WARNING:
With vehicle parked on a fairly steep slope, make sure nothing is in the way downhill to avoid any personal injury or property damage. Be prepared to apply regular brake quickly even if vehicle should start to move.

Check to ensure that parking brake is fully effective when the vehicle is stopped on the safe slope and brake lever is pulled all the way.

Steering
- Check to ensure that steering wheel is free from instability, or abnormally heavy feeling.
- Check that the vehicle does not wander or pull to one side.

Engine
- Check that engine responds readily at all speeds.
- Check that engine is free from abnormal noise and abnormal vibration.

Body, Wheels and Power Transmitting System
Check that body, wheels and power transmitting system are free from abnormal noise and abnormal vibration or any other abnormal condition.

Meters and Gauge
Check that speedometer, odometer, fuel meter, temperature gauge, etc. are operating accurately.

Lights
Check that all lights operate properly.

Windshield Defroster
Periodically check that air comes out from defroster outlet when operating heater or air conditioning.
Set fan switch lever to "HI" position for this check.

RECOMMENDED FLUIDS AND LUBRICANTS

Engine oil	SG, SH or SJ (Refer to engine oil viscosity chart in Item 1-4)
Engine coolant (Ethylene glycol base coolant)	"Antifreeze/Anticorrosion coolant"
Brake fluid	Specified fluid indicated on reservoir tank cap
Manual transmission oil	Refer to Section 7A.
Transfer oil	
Differential oil (front & rear)	Refer to Section 7E.
Automatic transmission fluid	An equivalent of DEXRON®-IIE or DEXRON®-III
Power steering fluid	An equivalent of DEXRON®-II, DEXRON®-IIE or DEXRON®-III
Clutch linkage pivot points	Water resistance chassis grease (SUZUKI SUPER GREASE A 99000-25010)
Door hinges	Engine oil or water resistance chassis grease
Hood latch assembly	
Key lock cylinder	Spray lubricant

SECTION 1A

HEATER AND VENTILATION

WARNING:
For vehicles equipped with Supplement Restraint (Air Bag) System

- **Service on and around the air bag system components or wiring must be performed only by an authorized SUZUKI dealer. Refer to "Air Bag System Components and Wiring Location View" under "General Description" in air bag system section in order to confirm whether you are performing service on or near the air bag system components or wiring. Please observe all WARNINGS and "Service Precautions" under "On-Vehicle Service" in air bag system section before performing service on or around the air bag system components or wiring. Failure to follow WARNINGS could result in unintentional activation of the system or could render the system inoperative. Either or these two conditions may result in severe injury.**
- **Technical service work must be started at least 90 seconds after the ignition switch is turned to the "LOCK" position and the negative cable is disconnected from the battery. Otherwise, the system may be activated by reserve energy in the Sensing and Diagnostic Module (SDM).**

NOTE:
The link mechanism of the heater varies depending on the specifications.

CONTENTS

GENERAL DESCRIPTION 1A-2
DIAGNOSIS 1A-3
Diagnosis Table 1A-3
Wiring Circuit 1A-3
ON-VEHICLE SERVICE 1A-4
Heater Blower Motor 1A-4
Heater Blower Resistor 1A-4
Heater Control Lever Assembly 1A-5
Heater Blower Fan Switch 1A-6
Heater Unit/Boost Ventilation 1A-6

GENERAL DESCRIPTION

The heater, an in and out air selectable-type hot water heater, is so constructed that it is possible to assure an agreeable ventilation at all times by providing the ventilator air outlets at the center and both sides (right and left) of the instrument panel, the hot air outlet at a place close to the feet of front passengers, and the defroster air outlets at places, right and left, along the windshield glass.
The heater and ventilation consist of following parts.

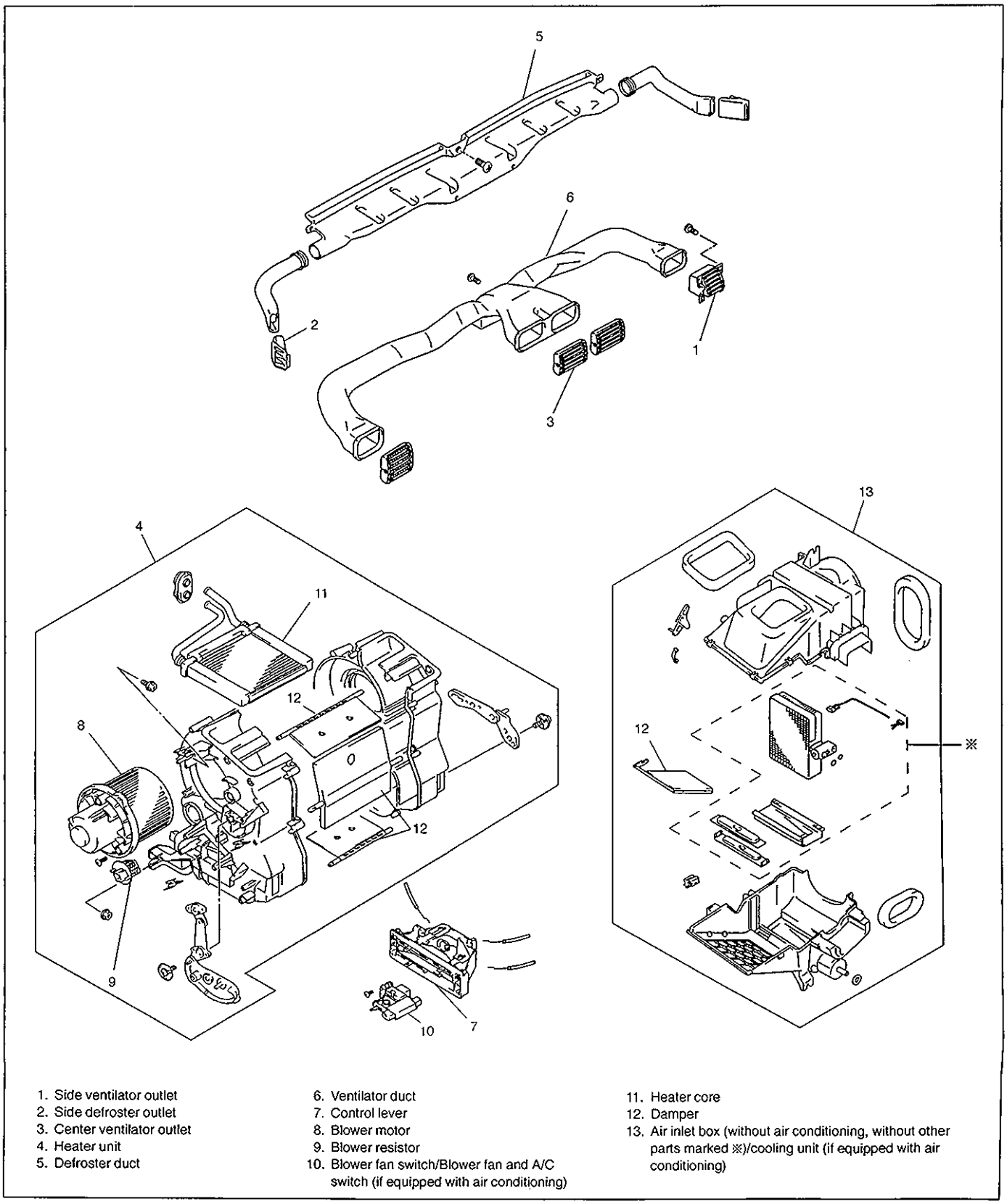

1. Side ventilator outlet
2. Side defroster outlet
3. Center ventilator outlet
4. Heater unit
5. Defroster duct
6. Ventilator duct
7. Control lever
8. Blower motor
9. Blower resistor
10. Blower fan switch/Blower fan and A/C switch (if equipped with air conditioning)
11. Heater core
12. Damper
13. Air inlet box (without air conditioning, without other parts marked ※)/cooling unit (if equipped with air conditioning)

DIAGNOSIS

DIAGNOSIS TABLE

Trouble	Possible cause	Remedy
Heater blower won't work even when its switch is ON.	Blower fuse blown Blower resistor faulty Blower fan switch faulty Blower motor faulty Wiring or grounding faulty	Replace fuse to check for short. Check resistor. Check blower fan switch. Replace motor. Repair as necessary.
Incorrect temperature output.	Control cables broken or binding Temperature control lever faulty Control cable clamp position is faulty Air damper broken Air ducts clogged Heater radiator leaking or clogged Heater hoses leaking or clogged	Check cables. Check control lever. Check and adjustment. Repair damper. Repair air ducts. Replace radiator. Replace hoses.
When mode control lever is changed, air outlet port is not changed.	Control cable broken or binding Mode control lever faulty Control cable clamp position is faulty Air damper broken Air ducts leaking on clogged	Check cable. Check control lever. Check and adjustment. Repair damper. Repair air ducts.

WIRING CIRCUIT

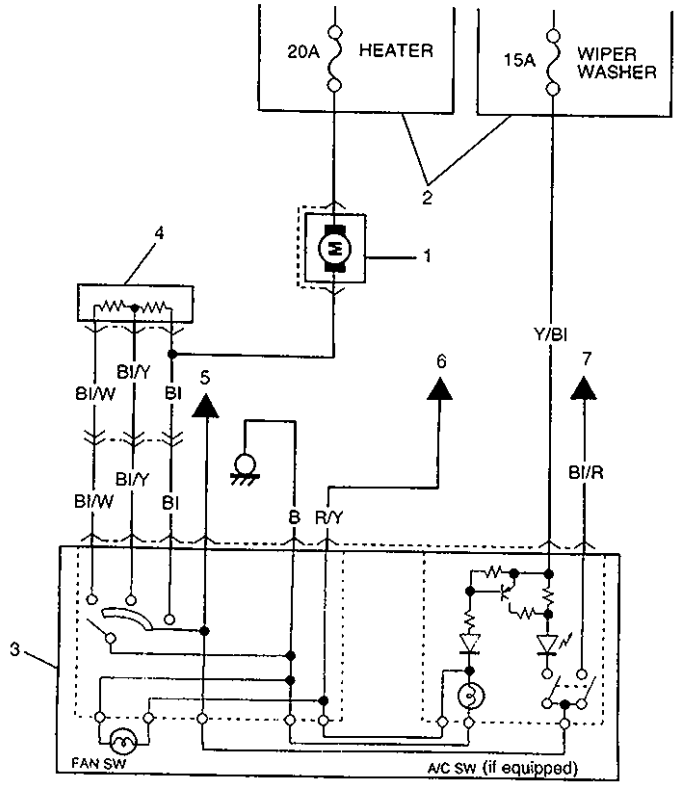

1. Heater motor
2. Fuse box
3. Heater blower motor switch
4. Heater resister
5. To ECM
6. To combination switch
7. To 4WD controller or A/C controller (if equipped)

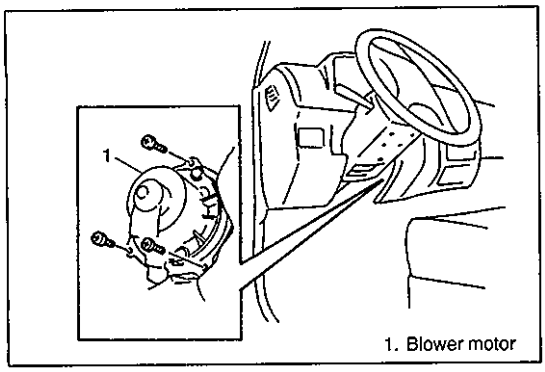

ON VEHICLE SERVICE

HEATER BLOWER MOTOR

REMOVAL

1) Disconnect negative (–) cable at battery.
2) Disable air bag system, if equipped.
   Refer to DISABLING AIR BAG SYSTEM in Section 10B.
3) Remove column hole cover.
4) Disconnect blower motor couplers.
5) Remove blower motor.

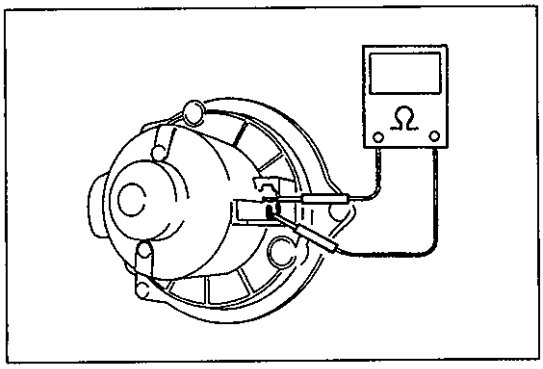

INSPECTION

Check continuity between two terminal as shown figure.
If check results are continuity, proceed to next operation check, If not replace.

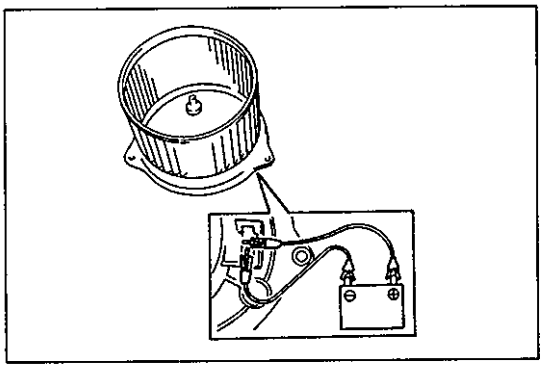

Connect battery to blower motor as shown, then check that the blower motor operates smoothly.

INSTALLATION

1) Reverse removal procedure for installation.
2) Enable air bag system, if equipped.
   Refer to ENABLING AIR BAG SYSTEM in Section 10B.

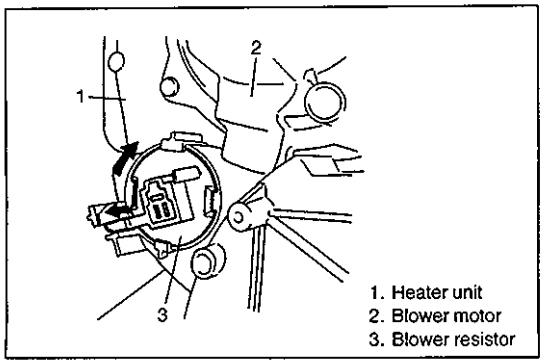

HEATER BLOWER RESISTOR

REMOVAL

1) Disconnect negative (–) cable at battery.
2) Disable air bag system, if equipped.
   Refer to DISABLING AIR BAG SYSTEM in Section 10B.
3) Disconnect resistor coupler.
4) Remove blower motor resistor as shown figure.

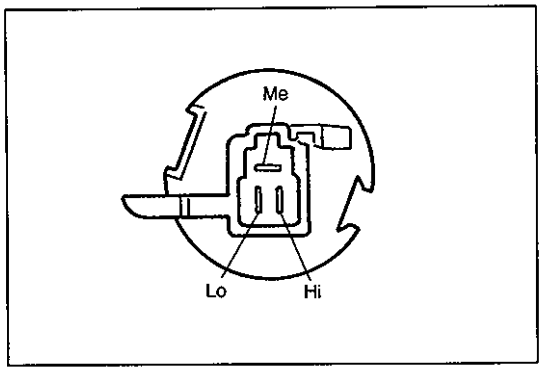

INSPECTION

Measure each terminal-to-terminal resistance on resistor

Resistance **Me – Lo : Approx. 2.4 Ω**
Me – Hi : Approx. 1.2 Ω

If measured resistance is incorrect, replace heater blower motor resistor.

INSTALLATION

1) Reverse removal procedure for installation.
2) Enable air bag system, if equipped.
   Refer to ENABLING AIR BAG SYSTEM in Section 10B.

HEATER CONTROL LEVER ASSEMBLY

REMOVAL

1) Disconnect negative (–) cable at battery.
2) Disable air bag system, if equipped.
   Refer to DISABLING AIR BAG SYSTEM in Section 10B.
3) Remove meter cluster hood, ashtray, center garnish, instrument glove box and radio or accessory case (if equipped) .

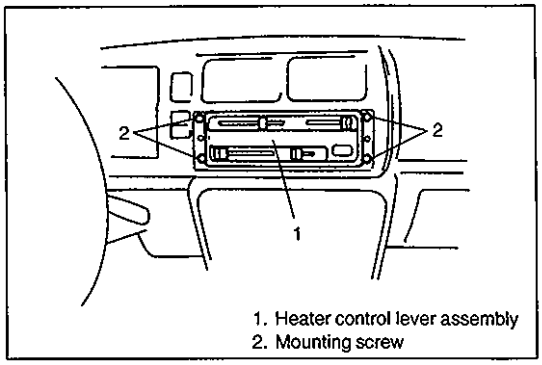

1. Heater control lever assembly
2. Mounting screw

4) Disconnect blower fan switch coupler and A/C switch coupler (if equipped) .
5) Disconnect each heater control cables.
6) Remove heater control lever assembly.

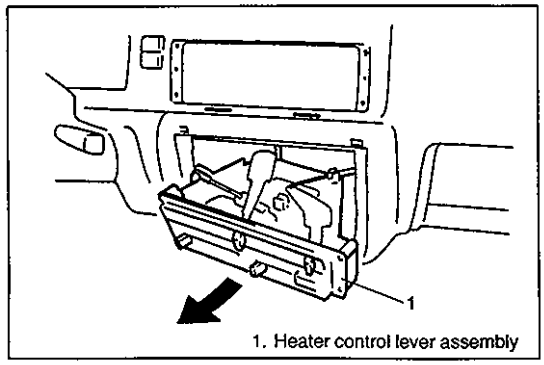

1. Heater control lever assembly

7) Remove blower fan switch screw
8) Remove blower fan switch as shown figure.

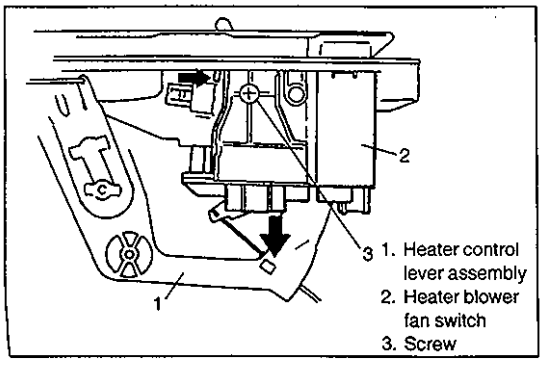

1. Heater control lever assembly
2. Heater blower fan switch
3. Screw

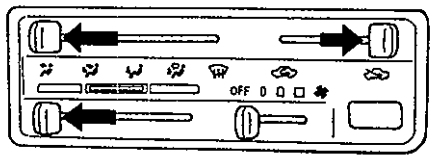

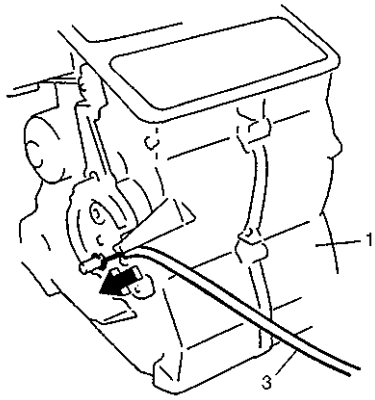

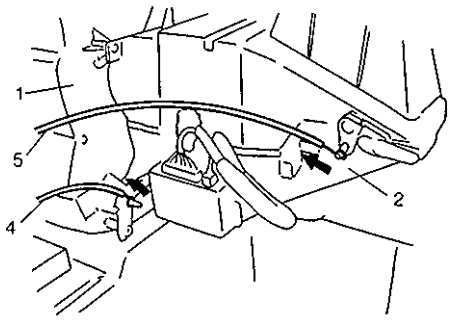

1. Heater unit
2. Air inlet box
3. Mode control cable
4. Temperature control cable
5. Fresh air control cable

INSTALLATION

1) Install in reverse order of removal procedure, adjustment the following items.
   - Move control lever fully in arrow direction
   - Push heater lever and air inlet box lever fully in arrow direction and fix cable with clamp in position as shown figure.

NOTE :
After installing control cables, be sure that control levers move smoothly and stop at proper position.

2) If equipped with air bag, enable air bag system. Refer to "ENABLING AIR BAG SYSTEM" in "AIR BAG SYSTEM" section.

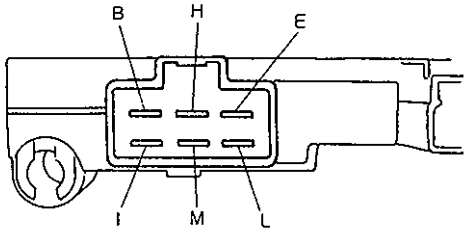

HEATER BLOWER FAN SWITCH

INSPECTION

Check blower fan switch for each terminal-to-terminal continuity. For the detail refer to "WIRING CIRCUIT" earlier in this section.

TERMINAL / POSITION	B	E	I	L	M	H
OFF	○	○				
Lo	○	○	○	○		
M	○	○	○		○	
Hi	○	○	○			○

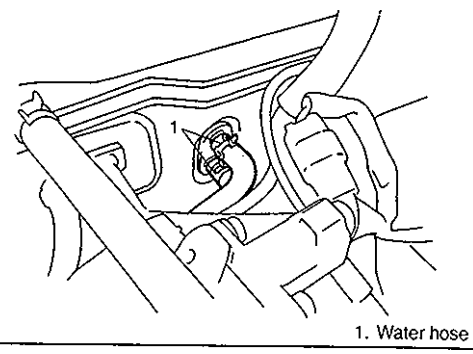

1. Water hose

HEATER UNIT/BOOST VENTILATION

REMOVAL

1) Disconnect negative (–) cable at battery.
2) If equipped with air bag system disable air bag system. Refer to DISABLING AIR BAG SYSTEM in *Section 10B*.
3) Drain engine coolant and disconnect water hoses from heater unit.
4) Remove instrument panel.

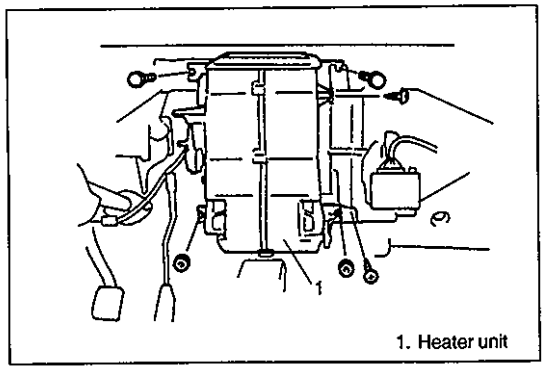

1. Heater unit

5) Remove bolts, nuts and screws as shown figure.
6) Remove heater unit.

INSTALLATION

Install heater unit by reversing removal procedure, noting the following items.

- When installing each part, be careful not to catch any cable or wiring harness.
- Adjust control cable (refer to heater control lever assembly in this section) .
- Fill engine coolant to radiator.
- If equipped with air bag system, enable air bag system, Refer to "ENABLING AIR BAG SYSTEM" in Section 10B.

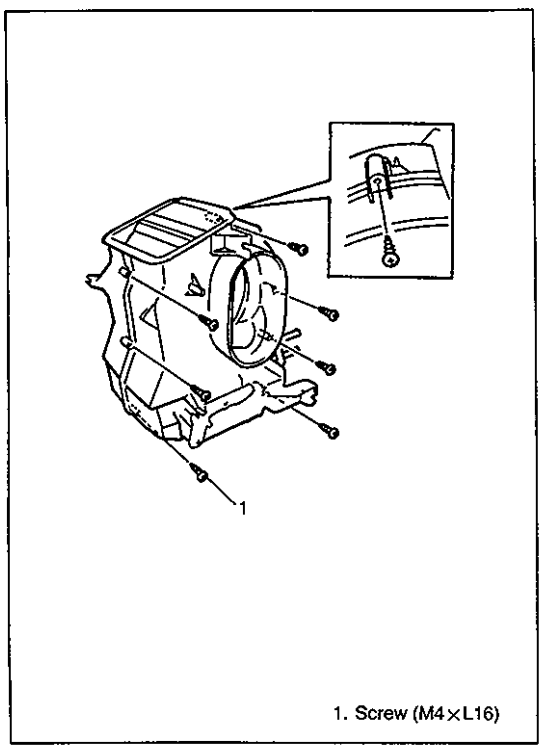

1. Screw (M4×L16)

CAUTION :
When the heater unit is disassembled and reassembled, locking force of the heater case lock may reduce. In such a case, tighten the heater case with a tapping screw of M4×L16 as shown in the left figure, or air may leak from its joint section.

SECTION 1B

AIR CONDITIONING

WARNING:
For vehicles equipped with Supplemental Restraint (Air Bag) System:

- **Service on and around the air bag system components or wiring must be performed only by an authorized SUZUKI dealer. Refer to "Air Bag System Components and Wiring Location View" under "General Description" in air bag system section in order to confirm whether you are performing service on or near the air bag system components or wiring. Please observe all WARNINGS and "Service Precautions" under "On-Vehicle Service" in air bag system section before performing service on or around the air bag system components or wiring. Failure to follow WARNINGS could result in unintentional activation of the system or could render the system inoperative. Either of these two conditions may result in severe injury.**
- **Technical service work must be started at least 90 seconds after the ignition switch is turned to the "LOCK" position and the negative cable is disconnected from the battery. Otherwise, the system may be activated by reserve energy in the Sensing and Diagnostic Module (SDM).**

CAUTION:
The air conditioning system of this vehicle uses refrigerant HFC-134a (R-134a).
None of refrigerant, compressor oil and component parts is interchangeable between two types of A/C: one using refrigerant CFC-12 (R-12) and the other using refrigerant HFC-134a (R-134a).
Be sure to check which refrigerant is used before any service work including inspection and maintenance. For identification between these two types, refer to the description in page 1B-2.
When replenishing or changing refrigerant and compressor oil and when replacing parts, make sure that the material or the part to be used is appropriate to the A/C installed in the vehicle being serviced. Use of incorrect one will result in leakage of refrigerant, damage in parts or other faulty condition.

CONTENTS

GENERAL DESCRIPTION 1B- 2
Major Components and Refrigerant Flow of Air Conditioning System 1B- 2
Component Location 1B- 3
Wiring Circuit 1B- 4
RECOVERY, EVACUATION AND CHARGING 1B- 5
DIAGNOSIS 1B- 6
A/C Controller and Its Circuit Inspection 1B- 8
A/C Compressor Drive Belt Inspection 1B- 9
ON-VEHICLE SERVICE 1B-10
A/C Condenser Assembly 1B-10
A/C Condenser Cooling Fan Motor 1B-10
Cooling Unit (Evaporator) 1B-11
Dual Pressure Switch 1B-12
A/C Switch 1B-12
A/C Compressor Relay and Condenser Cooling Fan Relay 1B-13
A/C Compressor 1B-14
Replenishing Compressor Oil 1B-15
PERFORMANCE TEST 1B-16

GENERAL DESCRIPTION

Air conditioning for this vehicle is available as an optional equipment. This section describes function of its main components, installation, servicing etc.
For basic servicing method of the air conditioning system that is not described in this section, refer to AIR CONDITIONING BASIC MANUAL (99520-02130).

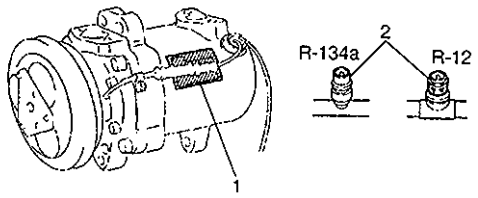

1. Compressor label
2. Service valve

Whether the A/C in the vehicle being serviced uses R-134a or R-12 is indicated on LABEL on the compressor. Also, it can be checked by the shape of the service (charge) valve.

MAJOR COMPONENTS AND REFRIGERANT FLOW OF AIR CONDITIONING SYSTEM

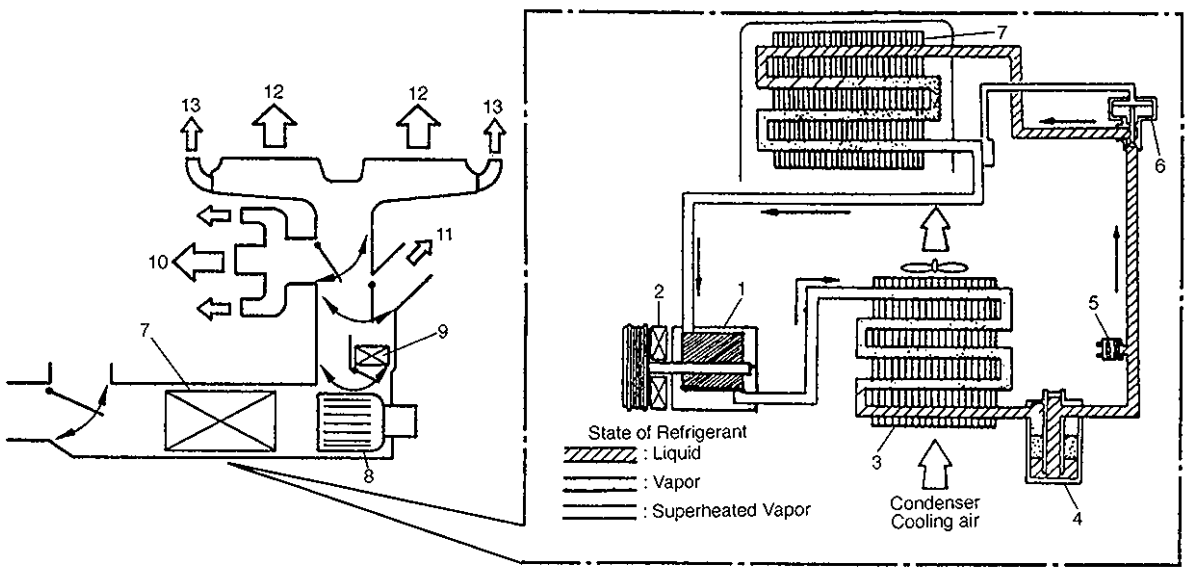

1. Compressor
2. Magnet clutch
3. Condenser
4. Receiver/dryer
5. Dual pressure switch
6. Expansion valve
7. Evaporator
8. Blower motor
9. Heater core
10. Ventilation
11. Foot
12. Defroster
13. Demister

COMPONENT LOCATION

ENGINE ROOM

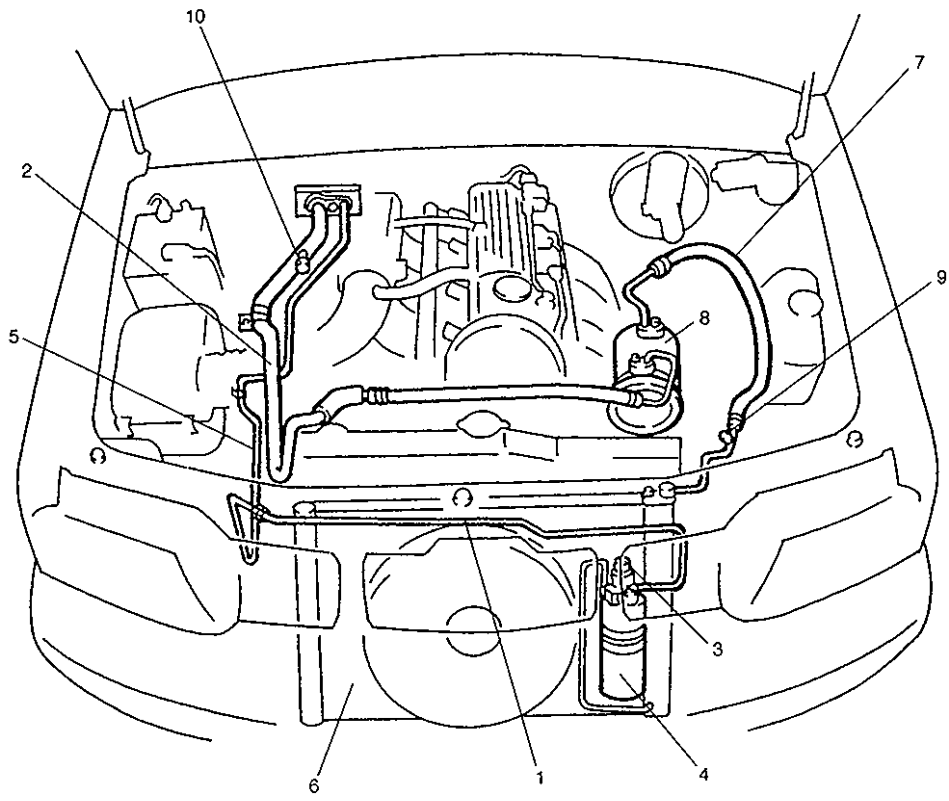

1. Receiver/Dryer outlet pipe
2. Compressor suction hose/pipe
3. Dual pressure switch
4. Receiver/Dryer
5. Evapolator inlet pipe
6. Condenser
7. Compressor delivery hose
8. Compressor
9. High pressure service valve
10. Low pressure service valve

PASSENGER ROOM

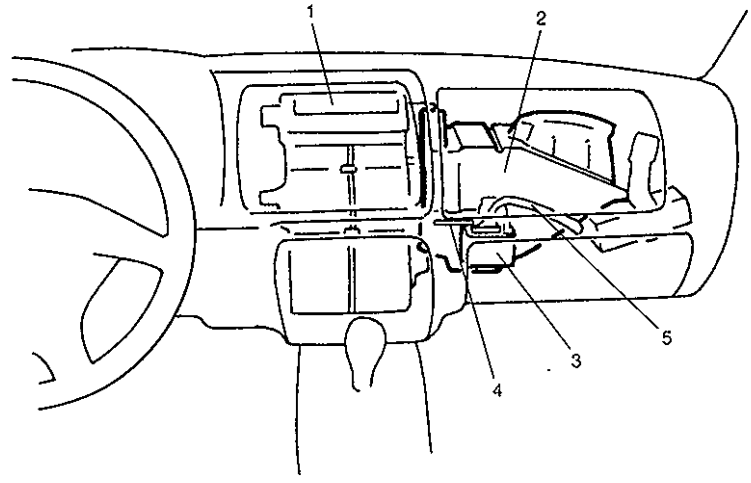

1. Heater unit
2. Cooling unit
3. A/C controller
4. Evapolator thermistor
5. A/C harness

WIRING CIRCUIT

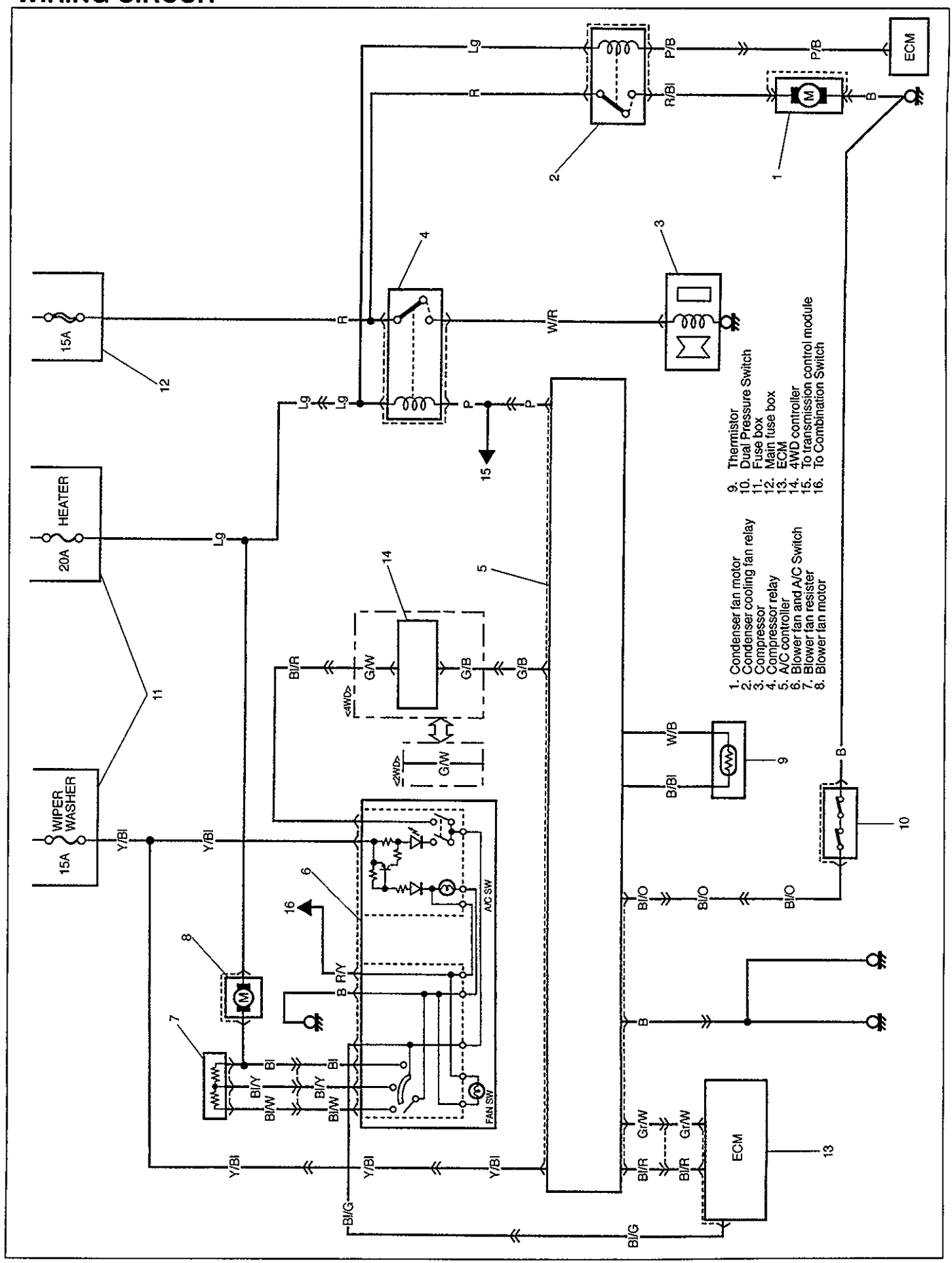

RECOVERY, EVACUATION AND CHARGING

OPERATION PROCEDURE FOR CHARGING A/C WITH REFRIGERANT

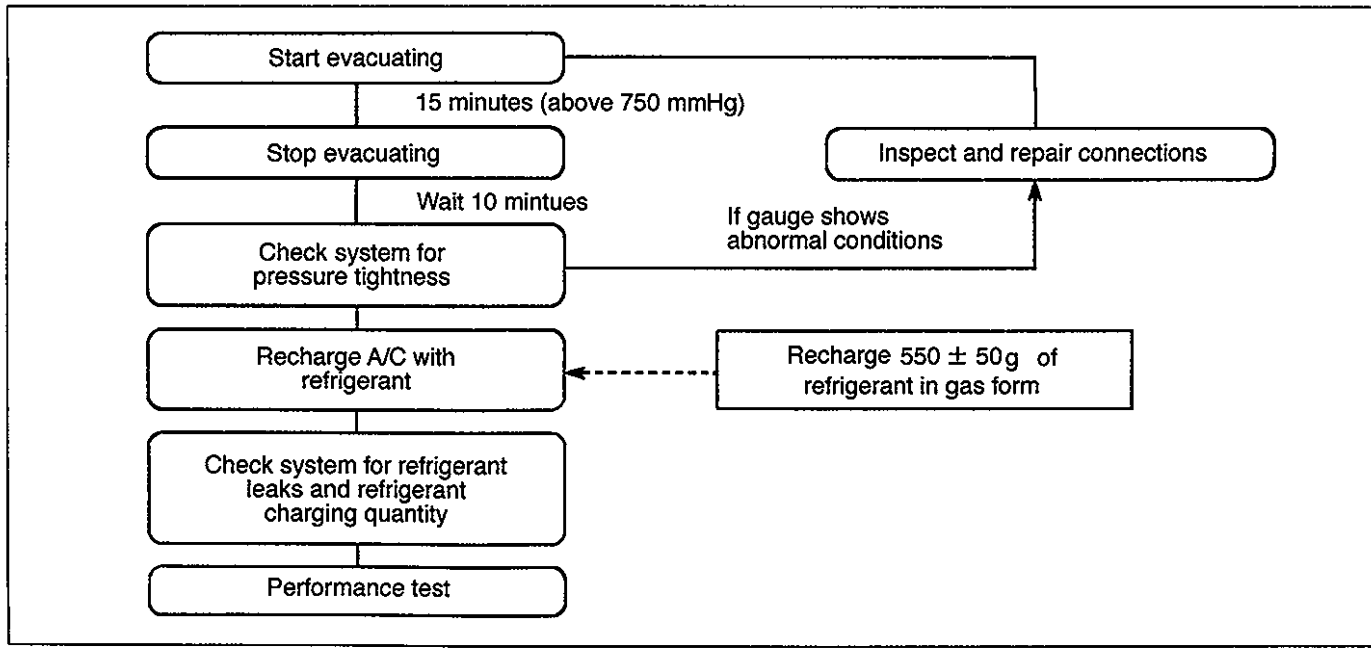

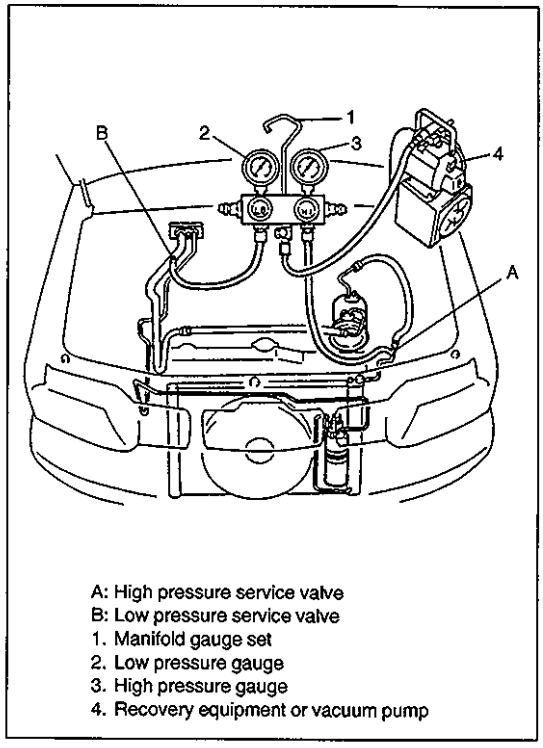

A: High pressure service valve
B: Low pressure service valve
1. Manifold gauge set
2. Low pressure gauge
3. High pressure gauge
4. Recovery equipment or vacuum pump

REFRIGERANT RECOVERY

When discharging refrigerant out of A/C system, always recover it by using refrigerant recovery and recycling equipment. Discharging it into atmosphere would cause adverse effect to environments.

NOTE:
When handling recovery and recycling equipment, be sure to follow the instruction manual for the equipment.

EVACUATING AND CHARGING

Refer to AIR CONDITIONING BASIC MANUAL (99520-02130).

CAUTION:
Do not evacuate before recovering refrigerant in system.

NOTE:
Specified amount of refrigerant: 550 ± 50g

DIAGNOSIS

Condition	Possible Cause	Correction
Cool air does not come out (A/C system improper operative)	**A/C system inoperative**	
	• No refrigerant	Recover, evacuation and charging.
	• Fuse blown	Check "WIPER WASHER" fuse, "HEATER" fuse and "A/C FUSE" and check for short circuit.
	• A/C switch faulty	Check A/C switch.
	• Blower fan switch faulty	Check blower fan switch
	• A/C thermistor faulty	Check A/C thermistor.
	• Dual pressure switch faulty	Check dual pressure switch.
	• Wiring or grounding faulty	Repair as necessary.
	• 4WD controller faulty	Check 4WD controller
	• A/C cut signal in ECM faulty	Check A/C cut signal.
	• A/C controller faulty	Check A/C controller.
	Compressor inoperative (dose not rotation)	
	• Magnet clutch faulty	Check magnet clutch.
	• Drive belt loose or broken	Tighten or replace drive belt.
	• Compressor faulty	Check compressor.
	• A/C cut signal in ECM faulty	Check A/C cut signal.
	• A/C controller faulty	Check A/C controller.
	Condenser cooling fan motor inoperative	
	• Condenser cooling fan relay faulty	Check condenser cooling fan relay
	• Wiring or grounding faulty	Repair as necessary
	• "A/C condenser fan relay" signal in ECM faulty	Check A/C condenser fan relay signal
	• Condenser cooling fan motor faulty	Check condenser cooling fan motor.
	Blower motor inoperative	
	• Fuse blown	Check "HEATER" fuse and check for short circuit.
	• Blower resistor faulty	Check blower resistor.
	• Blower fan switch faulty	Check blower fan switch.
	• Wiring or grounding faulty	Repair as necessary.
	• Blower motor faulty	Check blower motor.
Cool air does not come out or insufficient cooling (A/C system normal operative)	• Insufficient or excessive charge of refrigerant	Check charge of refrigerant. Check system for leaks.
	• Condenser clogged	Check condenser.
	• Evaporator clogged or frosted	Check evaporator Check A/C thermistor. Check A/C controller.
	• A/C thermistor faulty	Check A/C thermistor.
	• A/C controller faulty	Check A/C controller.
	• Expansion valve faulty	Check expansion valve.
	• Receiver/dryer clogged	Check receiver/dryer.
	• Drive belt slipping	Check or replace drive belt.
	• Magnetic clutch faulty	Check magnetic clutch.

Condition	Possible Cause	Correction
Cool air does not come out or insufficient cooling (A/C system normal operative)	• Compressor faulty	Check compressor.
	• Air in A/C system	Replace receiver/dryer, and evacuation and charging.
	• Air leaking from cooling unit or air duct	Repair as necessary.
	• Heater and ventilation system faulty	Check air inlet box Assy. Check heater control lever Assy. Check heater Assy
	• Blower motor faulty	Check blower motor.
	• Excessive compressor oil existing in A/C system	Pull out compressor oil in A/C system circuit, and replace compressor.
Cool air does not comes out only intermittently	• Wiring connection faulty	Repair as necessary.
	• Expansion valve faulty	Check expansion valve.
	• Excessive moisture in A/C system	Replace receiver/dryer, and evacuation and charging.
	• A/C controller faulty	Check A/C controller
	• Magnetic clutch faulty	Check magnetic clutch.
	• Compressor thermal protector faulty	Check compressor thermal protector
	• Excessive charge of refrigerant	Check charge of refrigerant.
Cool air comes out only at high speeds	• Condenser clogged	Check condenser.
	• Insufficient charge of refrigerant	Check charge of refrigerant.
	• Air in A/C system	Replace receiver/dryer, and evacuation and charging.
	• Drive belt slipping	Check or replace drive belt.
	• Compressor faulty	Check compressor.
Cool air does not comes out only at high speeds	• Excessive charge of refrigerant	Check charge refrigerant.
	• Evaporator frosted	Check evaporator. Check A/C thermistor.
Insufficient velocity of cooled air	• Evaporator clogged or frosted	Check evaporator. Check A/C thermistor.
	• Air leaking from cooling unit or air duct	Repair as necessary.
	• Blower motor faulty	Check blower motor.
	• Wiring or grounding faulty	Repair as necessary.

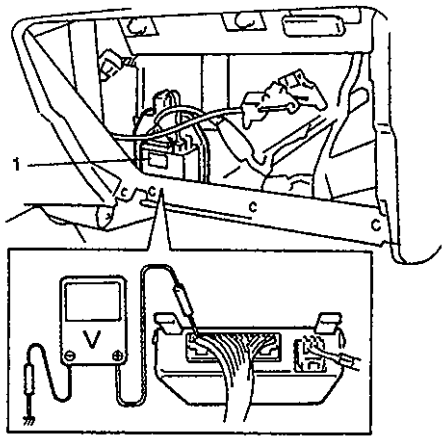

1. A/C controller

A/C CONTROLLER AND ITS CIRCUITS INSPECTION

A/C controller and its circuits can be checked at A/C controller wiring couplers by measuring voltage.

CAUTION:
A/C controller cannot be checked by itself. It is strictly prohibited to connect voltmeter or ohmmeter to A/C controller with couplers disconnected from it.

VOLTAGE CHECK

1) Remove A/C controller from body.
2) Connect A/C controller couplers to A/C controller.
3) Check voltage at each terminal of couplers connected and ignition switch is ON.

NOTE:
As each terminal voltage is affected by the battery voltage, confirm that it is 11V or more when ignition switch is ON.

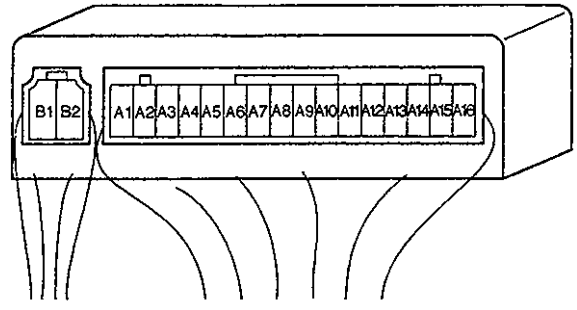

TERMINAL	CIRCUIT	NORMAL VOLTAGE	CONDITION
A1	Power Source	10 – 14 V	Ignition Switch ON
A2	Ground	0 – 1 V	Ignition Switch ON
A3	———	———	———
A4	Dual Pressure Switch	0 – 1 V	Ignition Switch ON
A5	———	———	———
A6	———	———	———
A7	A/C Switch or 4WD Controller	0 – 1 V	Blower fan Switch ON and A/C Switch ON at Ignition Switch ON
		10 – 14 V	Blower fan and A/C Switch OFF at Ignition Switch ON
A8	———	———	———
A9	ECM (A/C cut signal)	———	Refer to "INSPECTION OF ECM AND ITS CIRCUIT" in "ENGINE AND EMISSION CONTROL SYSTEM" Section
A10	———	———	———

TERMINAL	CIRCUIT	NORMAL VOLTAGE	CONDITION
A11	———	———	———
A12	———	———	———
A13	ECM (A/C signal)	———	Refer to "INSPECTION OF ECM AND ITS CIRCUIT" in "ENGINE AND EMISSION CONTROL SYSTEM" Section
A14	———	———	———
A15	———	———	———
A16	Compressor relay	0 – 1 V	Blower fan switch ON and A/C switch ON at engine running Terminal "A9" (A/C cut signal) at 5 V or more
		10 –14 V	Other than above at ignition switch ON
B1	Evaporator thermistor	0 – 1 V	Ignition switch ON
B2	Evaporator thermistor	0.9 – 1.1 V	Thermistor temperature 25°C, 77°F at ignition switch ON
		2.2 – 2.4 V	Thermistor temperature 0°C, 32°F at ignition switch ON

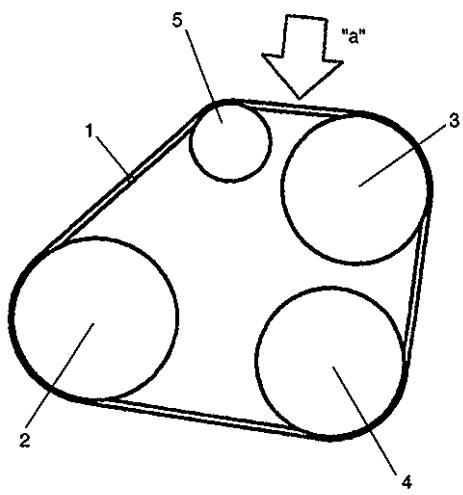

1. Drive belt
2. Crankshaft pulley
3. A/C compressor
4. Power stearing pump
5. Tension pulley

A/C COMPRESSOR DRIVE BELT INSPECTION

1) Check belt tension by measuring how much it deflects when pushed at intermediate point between compressor pulley and tension pulley with about 100 N (10 kg, 22 lbs) force.

"a" : 3 – 4 mm (0.12 – 0.16 in.) as deflection/100N (10 kg, 22 lbs)

2) Check belt for wear and cracks, and replace as required.

ON-VEHICLE SERVICE

CAUTION:
When refrigerant line must be disconnected and connected to remove and reinstall any component of A/C system, be sure to observe following instructions.

- **When disconnecting any line from system, install a bling plug or cap to fitting of such line immediately.**
- **When connecting hoses and pipes to each other respectively, previously apply a few drops of refrigerating oil to seats of coupling nuts and O-ring.**
- **When tightening or loosening a fitting, use two wrenches, one for turn and the other for support.**
- **Tighten flared nuts according to following specifications.Tightening torque for coupling nut**

8 mm pipe:	**13 N·m (1.3 kg-m, 9.5 lb-ft)**
14.5mm pipe:	**32 N·m (3.2 kg-m, 23.0 lb-ft)**

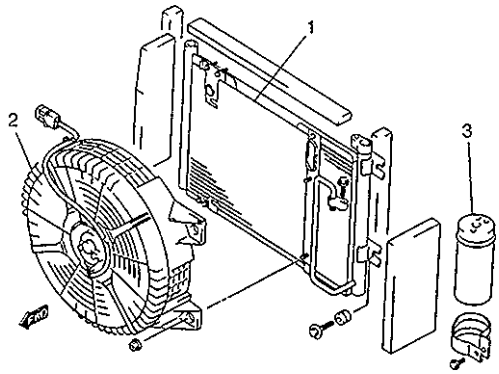

1. A/C condenser assembly
2. A/C condenser cooling fan
3. Reciver/dryer

A/C CONDENSER ASSEMBLY

INSPECTION

Check the following.

- Condenser fins for leakage, blockage and damage
- Condenser fittings for leakage

Clogged condenser fins should be washed with water, and should be dried with compressed air.

NOTE:
Be careful not to damage condenser fins. If condenser fin is bent, straighten it by using a screwdriver or pair of pliers. If any leakage is found from fitting or tube, repair or replace condenser.

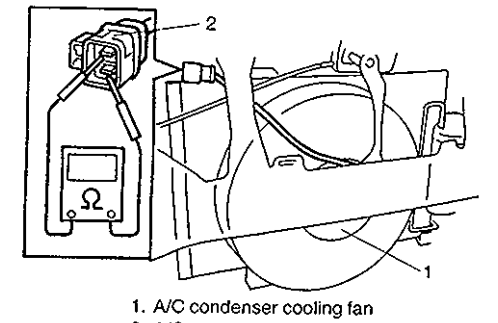

1. A/C condenser cooling fan
2. A/C condenser cooling fan motor coupler

A/C CONDENSER COOLING FAN MOTOR

INSPECTION

Check continuity between each two terminals.
If check results are continuity, proceed to next operation check.
If not , replace.

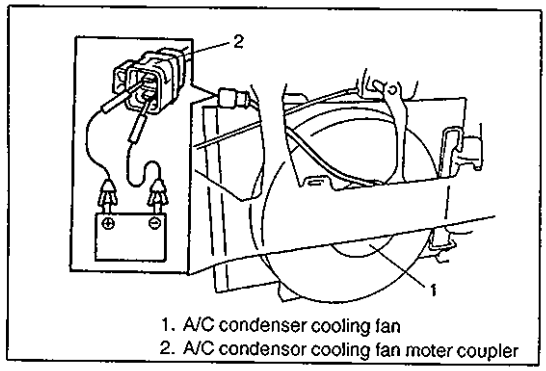

1. A/C condenser cooling fan
2. A/C condensor cooling fan moter coupler

Connect battery to A/C condenser fan motor as shown, then check that the condenser fan motor operates smoothly.

Reference current : approx 6.7 – 8.3 A at 12 V

COOLING UNIT (EVAPORATOR)

REMOVAL

1) Disconnect negative (–) cable at battery.
2) Recover refrigerant by using recovery and recycling equipment. Be sure to follow the instruction manual for the equipment.
   The amount of compressor oil removed must be measured and the same amount added to the system.
3) Disable air bag system, if equipped.
4) Remove Cooling Unit as shown in left figure.

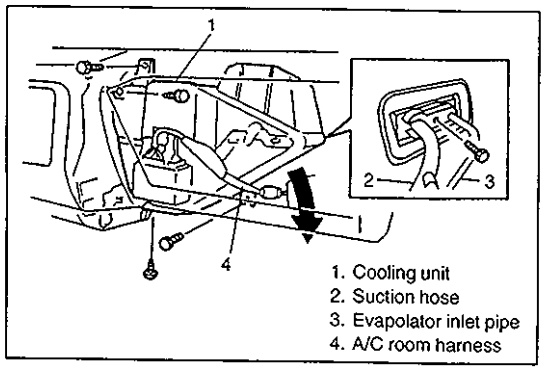

1. Cooling unit
2. Suction hose
3. Evapolator inlet pipe
4. A/C room harness

INSTALLATION

1) Install Cooling Unit by reversing removal procedure.
2) Evacuate and charge system according to previously described procedure.
3) Enable air bag system, if equipped.

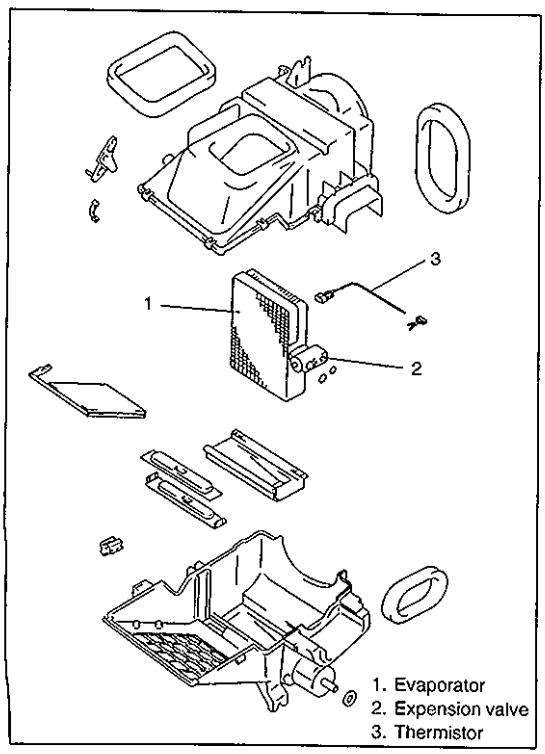

1. Evaporator
2. Expension valve
3. Thermistor

Evaporator

Check the following

- Evaporator fins for leakage, blockage and damage.
- Evaporator fitting for leakage.

Clogged evaporator fins should be washed with water, and should be dried with compressor air.

NOTE:

- **Be careful not to damage evaporator fins. If evaporator fin is bent, straighten it by using a screwdriver or pair of pliers, If any leakage is found from fitting or tube, repair or replace evaporator.**
- **When the thermistor removed, its should be reinstalled in original position.**

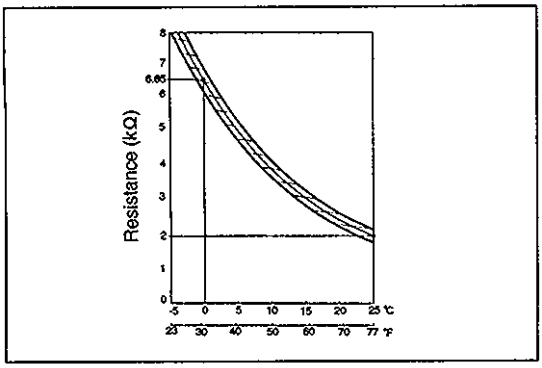

A/C evapo. thermistor

Check resistance between terminals.

Sensor Temperature (°C (°F))	Resistance (kΩ)
0 (32)	6.3 – 7.0
25 (77)	1.8 – 2.2

If check results are as not specified, replace thermistor.

NOTE:
When the thermistor removed, its should be reinstalled in original position.

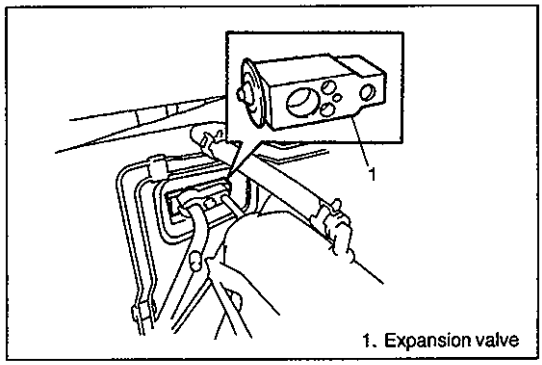

1. Expansion valve

Expansion valve

Refer to "Troubleshooting Procedure Using Manifold Gauge Set" earlier in "AIR CONDITIONING BASIC MANUAL".

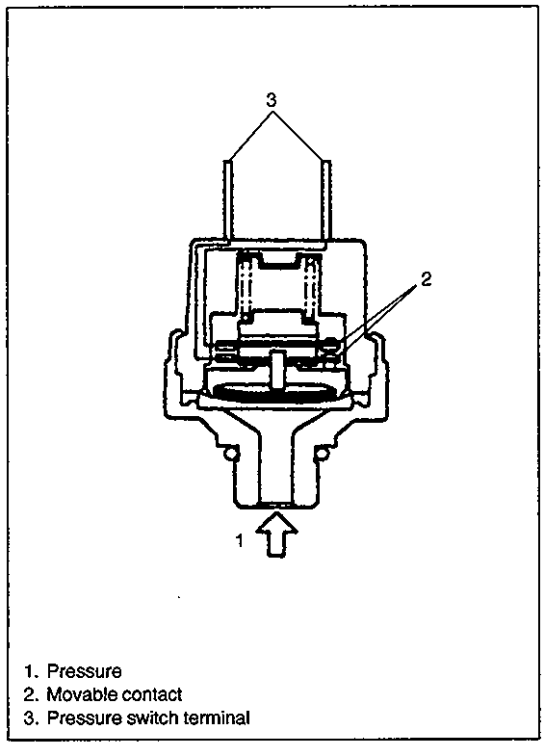

1. Pressure
2. Movable contact
3. Pressure switch terminal

DUAL PRESSURE SWITCH

INSPECTION

1) Check switches for continuity at normal temperature (approx. 25°C (77°F)) when A/C system has a proper charge of refrigerant and when A/C system (compressor) is under operation. In each of these cases, switches should show proper continuity.
2) When pressure is following specified pressure, switch should show no continuity.

High side pressure	Dual pressure switch
200 kPa (2.0 kg/cm^2) or below	No continuity
3200 kPa (32 kg/cm^2) or above	No continuity

Tightening torque for dual pressure switch
11 N·m (1.1 kg-m, 8.0 lb-ft)

A/C SWITCH

REMOVAL AND INSTALLATION

Refer to "HEATER CONTROL LEVER ASSEMBLY" in Section 1A.

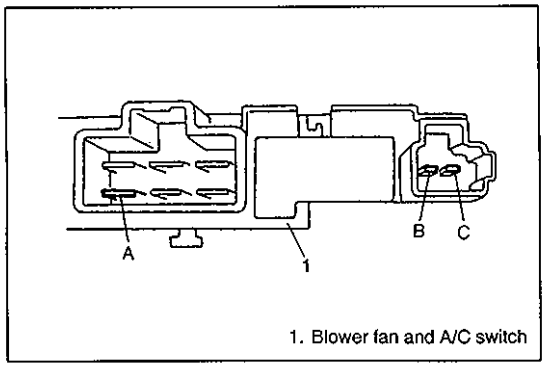

1. Blower fan and A/C switch

INSPECTION

- Press A/C Switch button and check if there is continuity between terminals "A" and "B".
- With battery voltage (+) connected to terminal "C" and (–) to terminal "A", press A/C Switch button and check if indicator lamp lights.

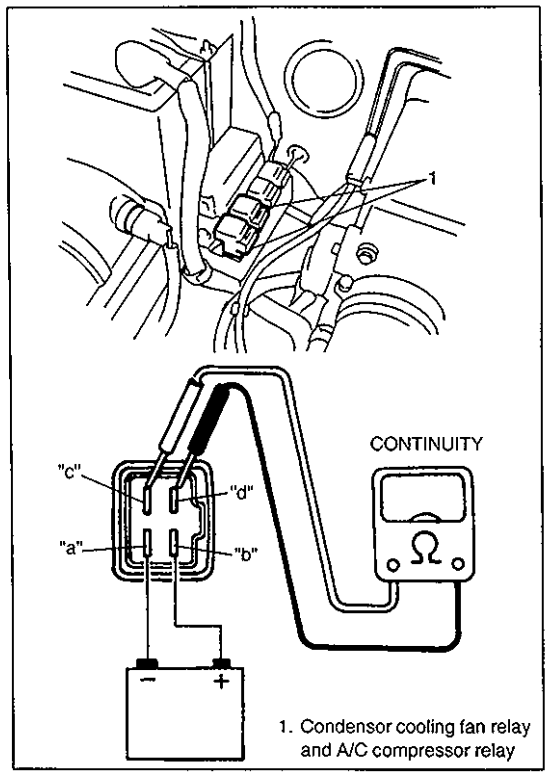

1. Condensor cooling fan relay and A/C compressor relay

A/C COMPRESSOR RELAY AND CONDENSER COOLING FAN RELAY

Inspection

1) Disconnect negative cable at battery.
2) Remove condenser cooling fan relay from vehicle.
3) Connect battery positive (+) terminal to terminal "b" of relay.
   Connect battery negative (–) terminal "a" of relay.
   Check continuity between terminal "c" and "d".
   If there is no continuity when relay is connected to the battery, replace relay.

A/C COMPRESSOR

REMOVAL AND INSTALLATION

Refer to the figure as given below when removing and installing A/C compressor.
After installing, be sure to check and adjust drive belt tension, referring to "A/C Compressor Drive Belt Inspection" under "Diagnosis".

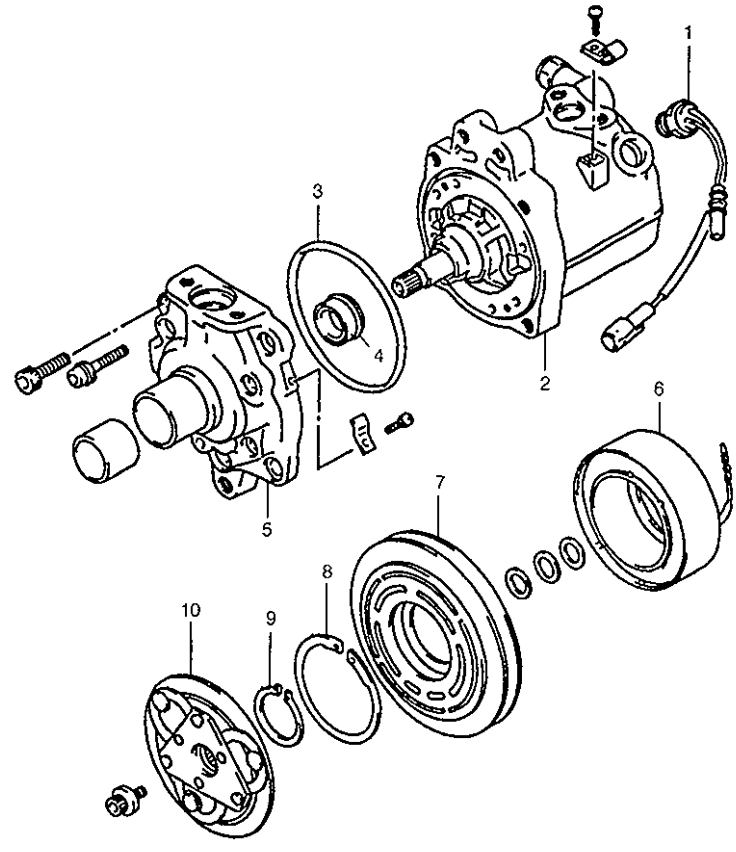

1. Thermal switch
2. Compressor
3. O-ring
4. Lip type seal
5. Front head
6. Clutch coil
7. Compressor pulley
8. Circlip
9. Circlip
10. Armature plate

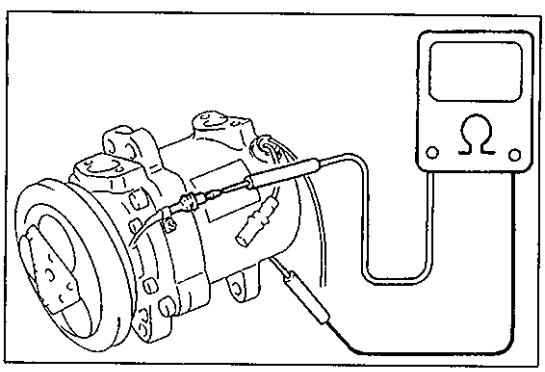

INSPECTION

- Check pressure plate and rotor for wear and oil soaked conditions respectively.
- Check clutch bearing for noise, wear and grease leakage.
- Measure stator coil for resistance at 20°C.

Standard Resistance: 2.9 – 3.8 Ω

If the measured resistance does not remain within above tolerance, replace coil.

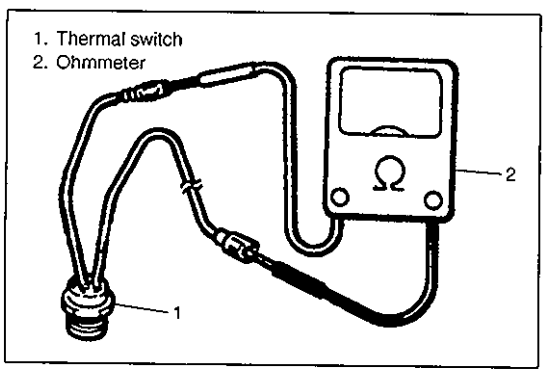

- Use an ohmmeter to check thermal switch for continuity. If it is no continuity, replace it.

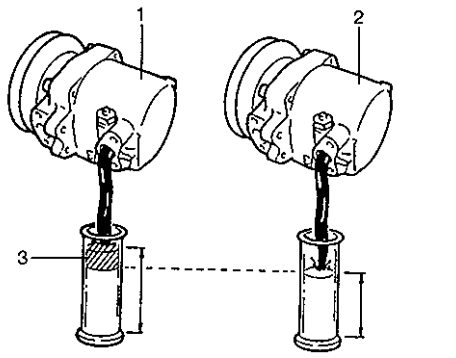

1. New compressor
2. Removed compressor
3. Excess oil (A–B)

REPLENISHING COMPRESSOR OIL

When replacing air conditioning parts with new ones, it is necessary to replenish oil by the amount supposedly remaining in each part.

When changing gas only

When it is unavoidable to change gas without replacing any component part for engine removal and installation or for some other reason, replenish 100cc oil. When replenishing gas only, oil replenishment is not necessary.

When replacing compressor

Compressor oil is sealed in each new compressor by the amount required for air conditioner cycle. Therefore, when using a new compressor for replacement, drain oil from it by the amount calculated as follows.

"C" = "D" – "E"

"C": Amount of oil to be drained

"D": Amount of oil sealed in a new compressor "A"

"E": Amount of oil remaining in removed compressor "B"

When replacing other part

Part replaced	Amount of compressor oil to be replenished
Evaporator	25 cc
Condenser	15 cc
Receiver/dryer	20 cc
Hoses	10 cc each
Pipes	10 cc each

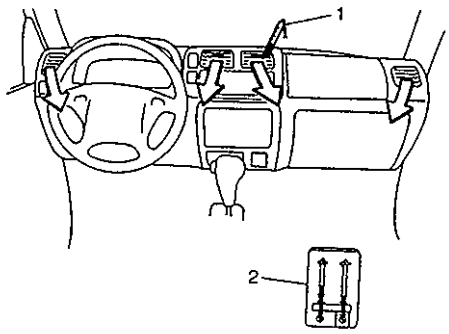

1. Thermometer
2. Psychrometer

PERFORMANCE TEST

After finishing all repairs, make sure to carry out performance test of A/C system as follows.

PROCEDURE

1) Connect high and low side charging hose of manifold gauge set to hose fittings of compressor.
2) Run engine, and keep speed at 1500 rpm.
3) Set A/C and fan switch at high position.
4) Keep all windows and doors open.
5) Insert a dry bulb thermometer in cool air outlet, and place psychrometer (dry and wet bulb thermometer) close to inlet of cooling unit.
6) The high pressure gauge reading should be within specified pressure range.

   High pressure gauge reading:
   1.4 – 1.6 Mpa (14 – 16 kg/cm^2, 200 – 228 psi)
   NOTE:
   If the gauge indicates too high, pour water on condenser or if it is too low, cover front surface of condenser.

7) The dry bulb thermometer at air inlet should be within 25 to 35°C (77 to 95°F).

Under above conditions, operate A/C system until a stabilized condition on high and low pressure gauges and thermometers has been established.

HOW TO READ THE STANDARD PERFORMANCE CURVE

1) Read psychrometer reading at the inlet, and get relative humidity from psychrometric chart. (See following figures.)
2) Measure dry bulb temperature at cool air outlet, then find out the difference between inlet and outlet temperatures.
3) Check the relative humidity-to-temperature difference relationship using the graph.
   As an example of 17°C (62.5°F) temperature difference and 60% relative humidity shown in it, if their crossing point falls within the area between two lines, cooling performance then is satisfactory and proper.

HOW TO READ RELATIVE HUMIDITY (°C)

Measure wet-bulb temperature and dry-bulb temperature on the psychrometer at the evaporator air inlet, follow lines at those temperatures and read the relative humidity curve at their intersection.

Example:
If dry-bulb temperature is 25°C and wet-bulb temperature is 19.5°C, the relative humidity is 60%.

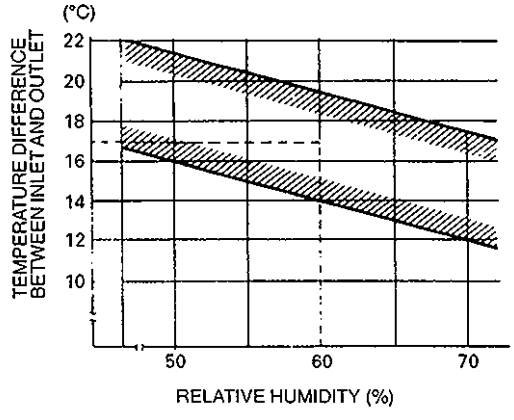

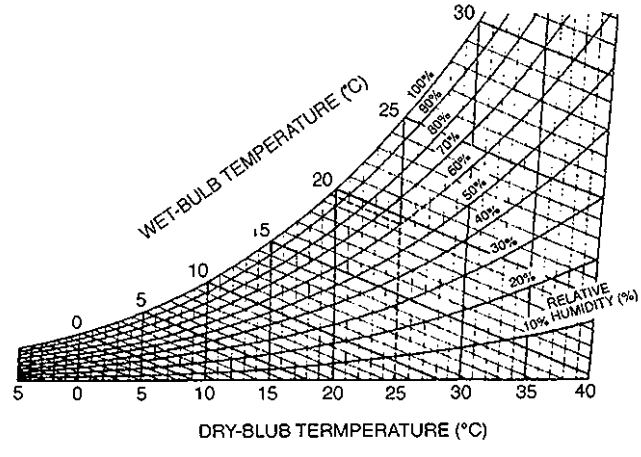

HOW TO READ RELATIVE HUMIDITY (°F)

Measure wet-bulb temperature and dry-bulb temperature on the psychrometer at the evaporator air inlet, follow lines at those temperatures and read the relative humidity curve at their intersection.

Example:
If dry-bulb temperature is 90°F and wet-bulb temperature is 78°F, the relative humidity is 60%.

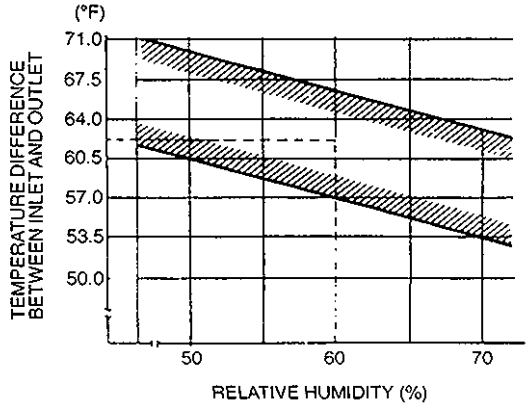

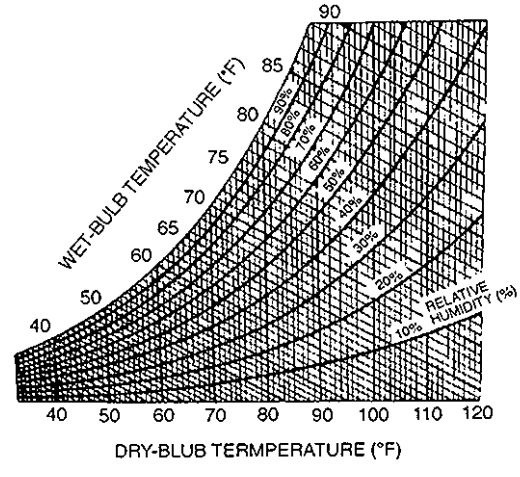

SECTION 3

STEERING, SUSPENSION, WHEELS AND TIRES

3

DIAGNOSIS 3-1
FRONT END ALIGNMENT 3A-1
STEERING GEAR BOX AND LINKAGE 3B2-1
POWER STEERING SYSTEM (OPTIONAL) 3B3-1
STEERING WHEEL, COLUMN AND SHAFT 3C-1
FRONT SUSPENSION 3D-1
REAR SUSPENSION 3E-1
WHEELS AND TIRES 3F-1

CONTENTS

GENERAL DIAGNOSIS 3-1
Diagnosis Table 3-2
TIRE DIAGNOSIS 3-5
Irregular and/or Premature Wear 3-5
Wear Indicator 3-5
Radial Tire Waddle 3-5
Radial Tire Lead 3-7
VIBRATION DIAGNOSIS 3-7

GENERAL DIAGNOSIS

Since the problems in steering, suspension, wheels and tires involve several systems, they must all be considered when diagnosing a complaint. To avoid using the wrong symptom, always road test the vehicle first.
Proceed with the following preliminary inspections and correct any defects which are found.

1) Inspect tires for proper pressure and uneven wear.
2) Raise vehicle on a hoist and inspect front and rear suspension and steering system for loose or damaged parts.
3) Spin front wheel. Inspect for out-of-round tires, out-of-balance tires, bent rims, loose and/or rough wheel bearings.

DIAGNOSIS TABLE

Condition	Possible Cause	Correction
Vehicle Pulls (Leads)	• Mismatched or uneven tires. • Tires not adequately inflated. • Broken or sagging springs. • Radial tire lateral force. • Disturbed front end alignment. • Disturbed rear axle alignment. • Brake dragging in one road wheel. • Loose, bent or broken front or rear suspension parts.	Replace tire. Adjust tire pressure. Replace spring. Replace tire. Check and adjust front end alignment. Check and adjust rear axle alignment. Repair front brake. Tighten or replace suspension part.
Abnormal or Excessive Tire Wear	• Sagging or broken springs. • Tire out of balance. • Disturbed front end alignment. • Faulty shock absorber. • Hard driving. • Overloaded vehicle. • Not rotating tire. • Worn or loose road wheel bearings. • Wobbly wheel or tires. • Tires not adequately inflated.	Replace spring. Adjust balance or replace tire. Check front end alignment. Replace shock absorber. Replace tire. Replace tire. Replace or rotate tire. Replace wheel bearing. Replace wheel or tire. Adjust the pressure.
Wheel Tramp	• Blister or bump on tire. • Improper shock absorber action.	Replace tire. Replace shock absorber.
Shimmy, Shake or Vibration	• Tire or wheel out of balance. • Loose wheel bearings. • Loose wheel hub nuts. • Worn tie rod ends. • Worn king pin bearings or king pins. • Excessive wheel runout. • Blister or bump on tire. • Excessively loaded radial runout of tire/wheel assembly. • Disturbed front end alignment. • Loose or worn steering linkage. • Loose steering gear box bolts. • Worn steering knuckle oil seal.	Balance wheels or replace tire and/or wheel. Replace wheel bearing. Retighten. Replace tie rod end. Replace king pin bearing and/or king pin. Repair or replace wheel and/or tire. Replace tire. Replace tire or wheel. Check and adjust front end alignment. Tighten or replace steering linkage. Tighten box bolts. Replace.
Hard Steering	• Bind in tie rod end ball studs or king pin bearings. • Disturbed front end alignment. • Steering gear box adjustment. • Tire not adequately inflated. • Bind in steering column. • Low fluid level, loose drive belt or malfunction of power steering system. (if equipped with P/S)	Replace tie rod end or king pin bearing. Check and adjust front end alignment. Check and adjust steering gear box. Inflate tires to proper pressure. Repair or replace. Check and correct.

Condition	Possible Cause	Correction
Too Much Play in Steering	• Wheel bearings worn. • Steering gear box attachments loose. • Steering gear box adjustments. • Worn steering shaft joints. • Worn tie rod ends drug rod ball joints. • Worn king pin bearings or king pin.	Replace wheel bearing. Tighten or repair. Check and adjust steering gear box. Replace joint. Replace tie rod end. Replace king pin bearing and/or king pin.
Poor Returnability	• Bind in tie rod end ball studs. • Bind in king pin bearings. • Bind in steering column. • Steering gear box needing lubricant. • Disturbed front end alignment. • Steering gear box not properly adjusted. • Tires not adequately inflated.	Replace tie rod end. Replace king pin bearing. Repair or replace. Check, repair or lubricate steering gear box. Check and adjust front end alignment. Check and adjust steering gear box torque. Adjust pressure.
Steering Noise (Rattle or Chuckle)	• Loose bolts and nuts. • Broken or otherwise damaged wheel bearings. • Worn or sticky tie rod ends. • Linkage joints needing grease.	Retighten. Replace wheel bearing. Replace tire rod end. Lubricate or replace.
Abnormal Noise, Front End	• Worn, sticky or loose tie rod ends, drug rod ball joints, king pin bearings or axle shaft joints. • Damaged shock absorbers or mountings. • Worn leading arm bushings. • Worn stabilizer bar bushings. • Worn lateral rod bushings. • Loose stabilizer bar. • Loose wheel nuts. • Loose suspension bolts or nuts. • Broken or otherwise damaged wheel bearings. • Broken suspension springs.	Replace tie rod end, king pin bearing or axle shaft joint. Replace or repair. Replace. Replace. Replace. Tighten bolts or replace bushes. Tighten wheel nuts. Tighten suspension bolts or nuts. Replace wheel bearing. Replace spring.

Condition	Possible Cause	Correction
Wander or Poor Steering Stability	• Mismatched or uneven tires.	Replace tire or inflate tires to proper pressure.
	• Loose king pin bearings and tie rod ends.	Replace king pin bearing or tie rod end.
	• Faulty shock absorbers or mounting.	Replace absorber or repair mounting.
	• Loose stabilizer bar.	Tighten or replace stabilizer bar or bushes.
	• Broken or sagging springs.	Replace spring.
	• Steering gear box not properly adjusted.	Check or adjust steering gear box torque.
	• Front end alignment.	Check and adjust front end alignment.
Erratic Steering when Braking	• Worn wheel bearings.	Replace wheel bearing.
	• Broken or sagging springs.	Replace spring.
	• Leaking wheel cylinder or caliper.	Repair or replace wheel cylinder or caliper.
	• Warped discs.	Replace brake disc.
	• Badly worn brake linings.	Replace brake shoe lining.
	• Drum is out of round in some brakes.	Replace brake drum.
	• Wheel tires are inflated unequally.	Inflate tires to proper pressure.
	• Defective wheel cylinders.	Replace or repair wheel cylinder.
	• Disturbed front end alignment.	Check front end alignment
Ride Too Soft	• Faulty shock absorber.	Replace shock absorber.
Suspension bottoms	• Overloaded.	Check loading.
	• Faulty shocks absorber.	Replace shock absorber.
	• Incorrect, broken or sagging springs.	Replace spring.
Body Leans or Sways in Corners	• Loose stabilizer bar.	Tighten stabilizer bar bolts or replace bushes.
	• Faulty shocks absorbers or mounting.	Replace shock absorber or tighten mounting.
	• Broken or sagging springs.	Replace spring.
	• Overloaded.	Check loading.
Cupped Tires	• Worn wheel bearings.	Replace wheel bearing.
	• Excessive tire or wheel run-out.	Replace tire or wheel disc.
	• Tire out of balance.	Adjust tire balance.

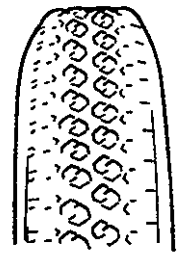

- Hard Cornering
- Under-Inflation
- Lack of Rotation

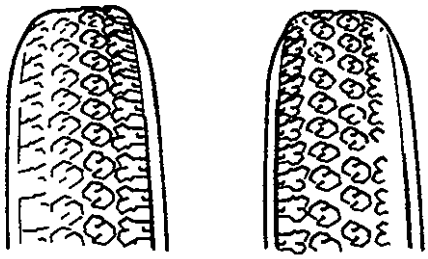

- Incorrect Wheel Alignment
- Tire Construction Non-Uniformity
- Wheel Heavy Acceleration

TIRE DIAGNOSIS

IREGULAR AND/OR PREMATURE WEAR

Irregular and premature wear has many possible causes. Some of them are: incorrect inflation pressures lack of tire rotation, driving habits, improper alignment.

If the following conditions are noted rotation is in order:

- Front tire wear is different from rear.
- Uneven wear exists across the tread of any tire.
- Left front and right front tire wear is unequal.
- Left rear and right rear tire wear is unequal.
- There is cupping, flat spotting, etc.

A wheel alignment check is in order if the following conditions are noted:

- Left front and right front tire wear is unequal.
- Wear is uneven across the tread of any front tire.
- Front tire treads have scuffed appearance with "feather" edges on one side of tread ribs or blocks.

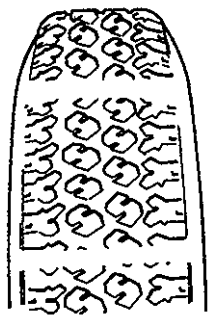

WEAR INDICATOR

The original equipment tires have built-in tread wear indicators to show when tires need replacement. These indicators will appear as 12 mm (0.47 inch) wide bands when the tire tread depth becomes 1.6 mm (0.063 inch). When the indicators appear in 3 or more grooves at 6 locations, tire replacement is recommended.

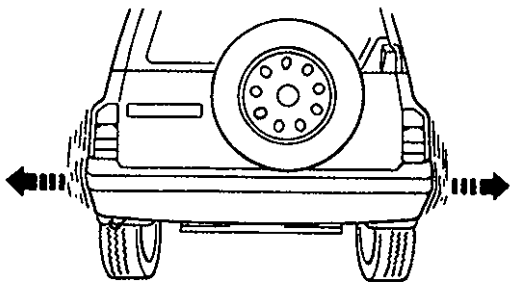

RADIAL TIRE WADDLE

Waddle is side to side movement at the front and/or rear of the vehicle. It is caused by the steel belt not being straight within the tire. It is most noticeable at low speed, 5 to 30 mph. It is possible to road test a vehicle and tell on which end of the vehicle the faulty tire is located. If the waddle tire is on the rear, the rear end of the vehicle will shake from side to side or "waddle". From the driver's seat it feels as though someone is pushing on the side of the vehicle. If the faulty tire is on the front, the waddle is more visual. The front sheet metal appears to be moving back and forth and the driver feels as though he is at the pivot point in the vehicle. Waddle can be quickly diagnosed by using a Tire Problem Detector (TPD) and following the equipment manufacturer's recommendations.

If a TPD is not available, the more time consuming method of substituting known good tire/wheel assemblies on the problem vehicle can be used as follows:

1) Ride vehicle to determine whether the front or rear waddles.
2) Install tires and wheels that are known to be good (on similar vehicle) in place of those on wadding end of vehicle. If wadding end cannot be identified, substitute rear ones.
3) Road test again. If improvement is noted, reinstall originals one at a time till waddle causal tire is found. If no improvement is noted, install known good tires in place of all four. Then reinstall originals in the same manner as above.

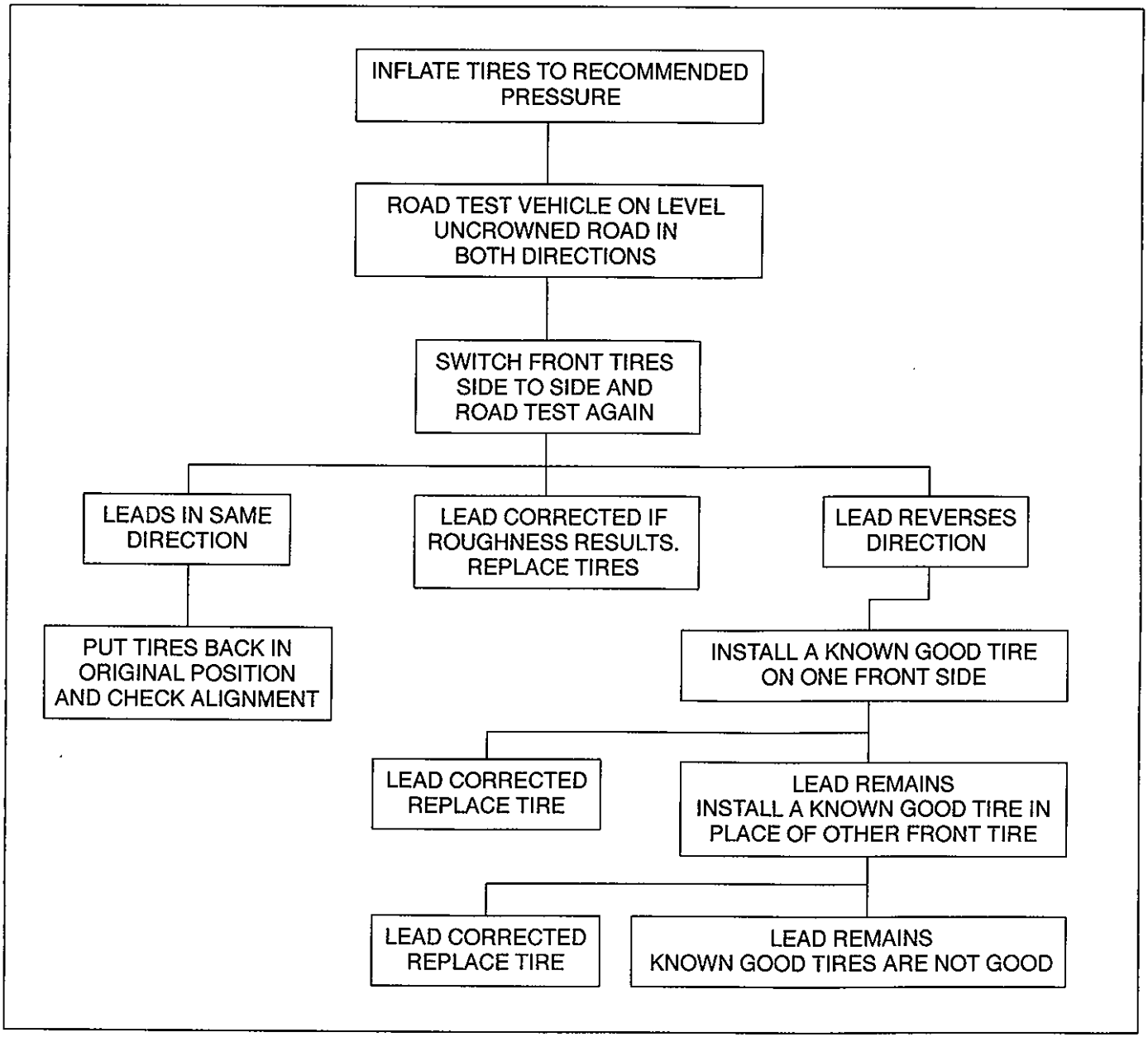

RADIAL TIRE LEAD

"Lead" is the deviation of the vehicle from a straight path on a level rod even with no pressure on the steering wheel. Lead is usually caused by:

1) Incorrect alignment.
2) Uneven brake adjustment.
3) Tire construction.

The way in which a tire is built can produce lead in a vehicle. An example of this is placement of the belt. Off center belts on radial tires can cause the tire to develop a side force while rolling straight down the road. If one side of the tire has a little larger diameter than the other, the tire will tend to roll to one side. This will develop a side force which can produce vehicle lead.

The procedure in above figure (Lead Diagnosis) should be used to make sure that front alignment is not mistaken for tire lead.

1) Part of the lead diagnosis procedure is different from the proper tire rotation pattern currently in the owner and service manuals. If a medium to high mileage tire is moved to the other side of the vehicle, be sure to check that ride roughness has not developed.
2) Rear tires will not cause lead.

VIBRATION DIAGNOSIS

Wheel unbalance causes most of the highway speed vibration problems. If a vibration remains after dynamic balancing, its possible causes are as follows.

1) Tire runout.
2) Wheel runout.
3) Tire stiffness variation.

Measuring tire and/or wheel free runout will uncover only part of the problem. All three causes, known as loaded radial runout, must be checked by using a Tire Problem Detector (TPD). If TPD is not available, alternative method of substituting known good tire and wheel assemblies on the problem vehicle can be used, although it takes a longer time.

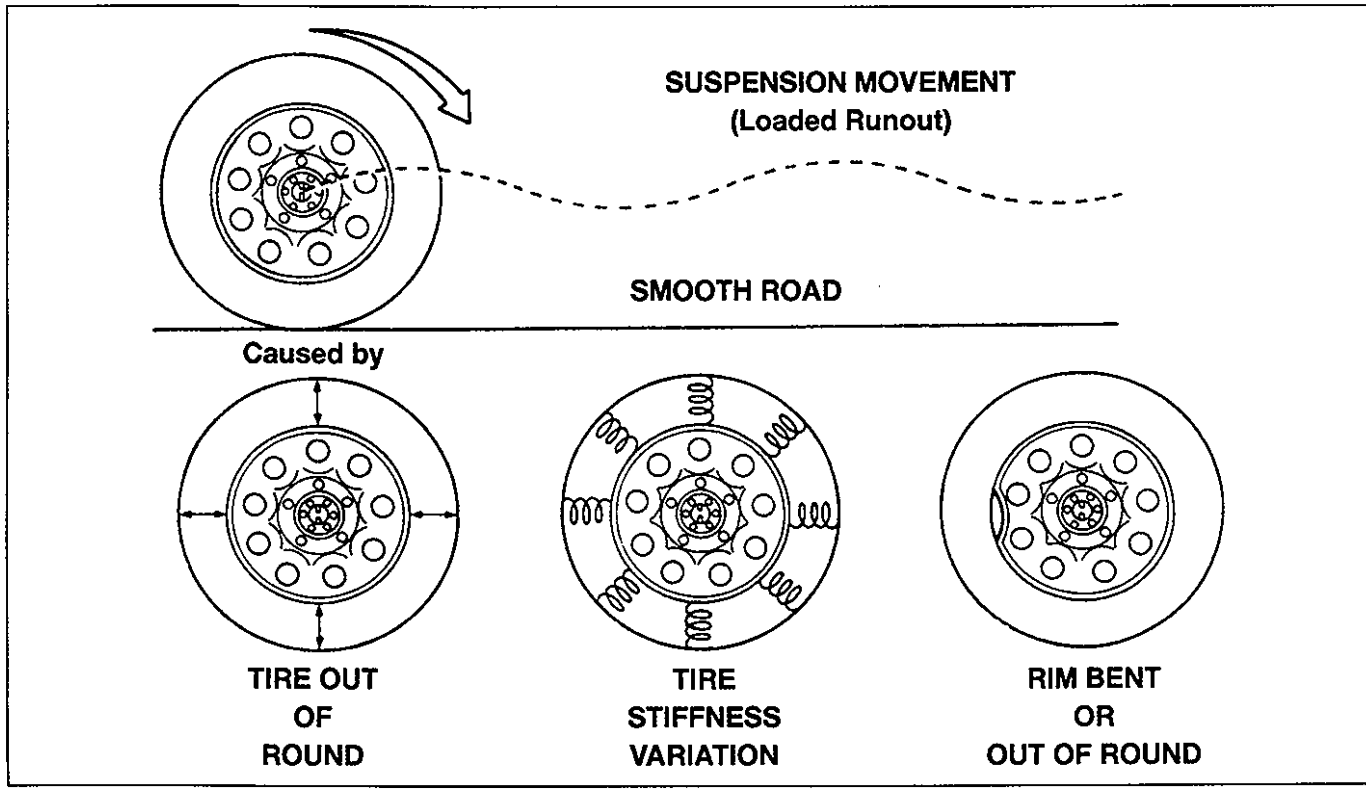

SECTION 3A

FRONT END ALIGNMENT

CONTENTS

DIAGNOSIS 3-1

GENERAL DESCRIPTION 3A-1
- Toe Setting 3A-1
- Camber 3A-1
- Preliminary Checks Prior to Adjusting Front Alignment 3A-2
- Toe Adjustment 3A-2
- Camber and Caster Adjustment 3A-2
- Steering Angle 3A-3

GENERAL DESCRIPTION

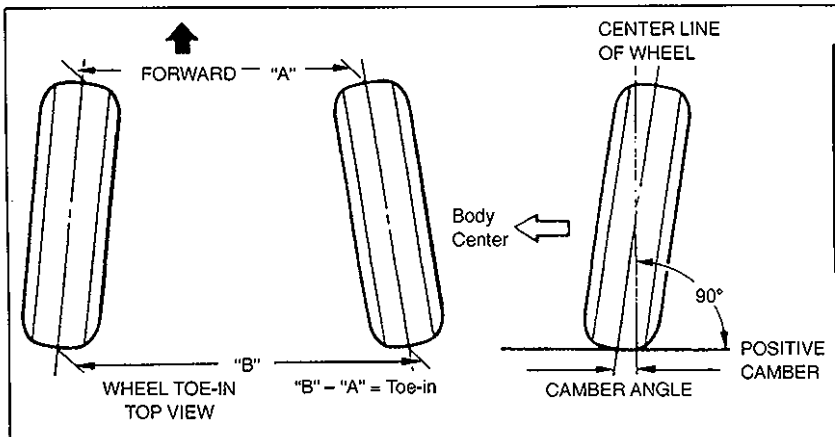

Alignment service data	
Toe-in (Toe-in gauge measurement)	2 – 6 mm (0.08 – 0.24 in.)
Camber	0° 30' ± 1°
Caster	1° 55' ± 1°

NOTE:
Toe-in value given above was measured by using a toe-in gauge.

Front alignment refers to the angular relationship between the front wheels, the front suspension attaching parts and the ground. Generally, the only adjustment required for front alignment is toe setting. Camber and caster can't be adjusted. Therefore, should camber or caster be out of specification due to the damage caused by hazardous road conditions or collision, whether the damage is in body or in suspension should be determined. If the body is damaged, it should be repaired and if suspension is damaged, it should be replaced.

TOE SETTING

Toe is the turning in or out of the front wheels. The purpose of a toe specification is to ensure parallel rolling of the front wheels (Excessive toe-in or toe-out may increase tire wear).
Amount of toe can be obtained by subtracting "A" from "B" as shown in above figure and therefore is given in mm (in.).

CAMBER

Camber is the tilting of the front wheels from the vertical, as viewed from the front of the vehicle. When the wheels tilt outward at the top, the camber is positive. When the wheels tilt inward at the top, the camber is negative. The amount of tilt is measured in degrees.

PRELIMINARY CHECKS PRIOR TO ADJUSTING FRONT ALIGNMENT

Steering and vibration complaints are not always the result of improper alignment. An additional item to be checked is the possibility of tire lead due to worn or improperly manufactured tires. "Lead" is the deviation of the vehicle from a straight path on a level road without hand pressure on the steering wheel. Section 3 of this manual contains a procedure for determining the presence of a tire lead problem. Before making any adjustment affecting toe setting, the following checks and inspections should be made to ensure correctness of alignment readings and alignment adjustments:

1) Check all tires for proper inflation pressures and approximately the same tread wear.
2) Check for loose of king pin bearings. Check tie rod ends; if excessive looseness is noted, it must be corrected before adjusting.
3) Check for run-out of wheels and tires.
4) Check vehicle trim heights; if out of limits and a correction is to be made, it must be made before adjusting toe.
5) Check for loose of suspension arms.
6) Check for loose or missing stabilizer bar attachments.
7) Consideration must be given to excess loads, such as tool boxes. If this excess load is normally carried in vehicle, it should remain in vehicle during alignment checks.
8) Consider condition of equipment being used to check alignment and follow manufacturer's instructions.
9) Regardless of equipment used to check alignment, vehicle must be on a level surface both fore and aft and transversely.

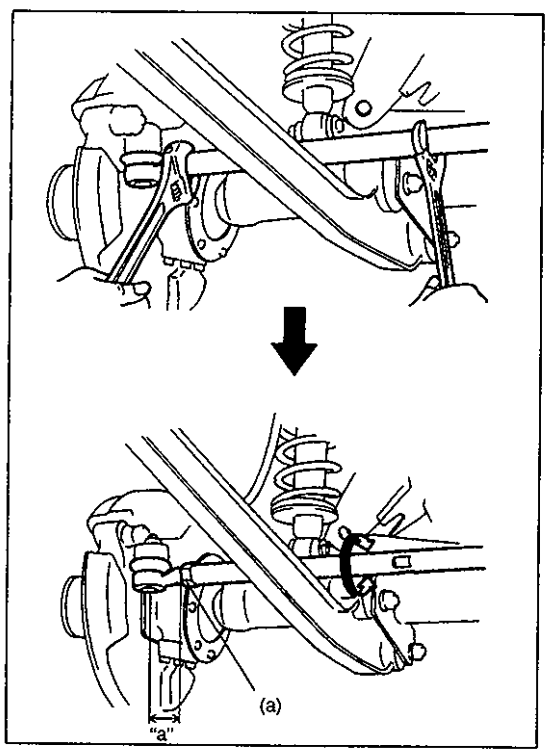

TOE ADJUSTMENT

Toe is adjusted by changing tie rod length. Loosen right and left tie rod end lock nuts first and then rotate tie rod to align toe-in to specification.

In this adjustment, right and left tie rod should become equal in length ("a" in left figure).

After adjustment, tighten lock nuts to specified torque.

Tightening Torque
(a): 65 N·m (6.5 kg-m, 47.0 lb-ft)

CAMBER AND CASTER ADJUSTMENT

Should camber or caster be found out of specifications upon inspection, locate its cause first. If it is in damaged, loose, bent, dented or worn suspension parts and axle housing, they should be replaced. If it is in vehicle body, repair it so as to attain specifications.

To prevent possible incorrect reading of camber or caster, vehicle front end must be moved up and down a few times before inspection.

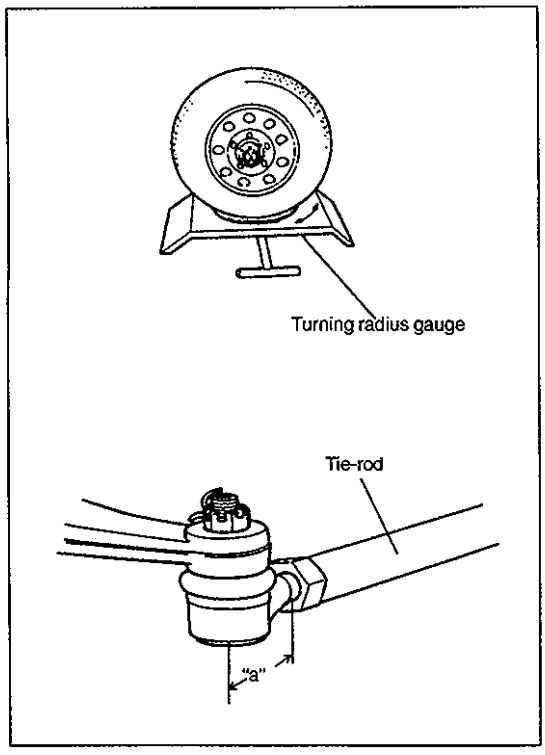

STEERING ANGLE

When tie rod or tie rod end was replaced, check toe and then also steering angle with turning radius gauges.
If steering angle is not correct, check if right and left tie rods are equal in length ("a" in figure).

NOTE:
If tie rod lengths were changed to adjust steering angle, reinspect toe-in.

Steering angle

inside:	**35° ± 3°**
outside:	**32.5° ± 3°**

Reference Information:
Side slip:
For inspecting front wheel side slip with side slip tester:

Side slip limit:	**Less than 3 mm/m**
	(Less than 0.118 in/3 ft)

If side slip exceeds above limit, toe-in or front wheel alignment may out not be correct.

SECTION 3B

STEERING GEAR BOX AND LINKAGE

WARNING:
For vehicles equipped with Supplemental Restraint (Air Bag) System:

- **Service on and around the air bag system components or wiring must be performed only by an authorized SUZUKI dealer. Refer to "Air Bag System Components and Wiring Location View" under "General Description" in air bag system section in order to confirm whether you are performing service on or near the air bag system components or wiring. Please observe all WARNINGS and "Service Precautions" under "On-Vehicle Service" in air bag system section before performing service on or around the air bag system components or wiring. Failure to follow WARNINGS could result in unintentional activation of the system or could render the system inoperative. Either of these two conditions may result in severe injury.**
- **Technical service work must be started at least 90 seconds after the ignition switch is turned to the "LOCK" position and negative cable is disconnected from the battery. Otherwise, the system may be activated by reserve energy in the Sensing and Diagnostic Module (SDM).**

NOTE:
All steering gear fasteners are important attaching parts in that they could affect the performance of vital parts and systems, and/or could result in major repair expense. They must be replaced with one of the same part number or with an equivalent part if replacement becomes necessary. Do not use a replacement part of lesser quality or substitute design. Torque values must be used as specified during reassembly to assure proper retention of these parts.

CONTENTS

GENERAL DESCRIPTION 3B-2
DIAGNOSIS 3B-3
Diagnosis Table 3B-3
ON-VEHICLE SERVICE 3B-3
Steering Gear Box 3B-3
Tie Rod and Drag Rod 3B-5
INSPECTION 3B-7
Steering Wheel 3B-7
Tie Rod and Drag Rod 3B-7
Tie Rod and Drag Rod End Ball Joint 3B-7
Steering Gear Box 3B-7
TIGHTENING TORQUE SPECIFICATIONS 3B-9
SPECIAL TOOLS 3B-9

GENERAL DESCRIPTION

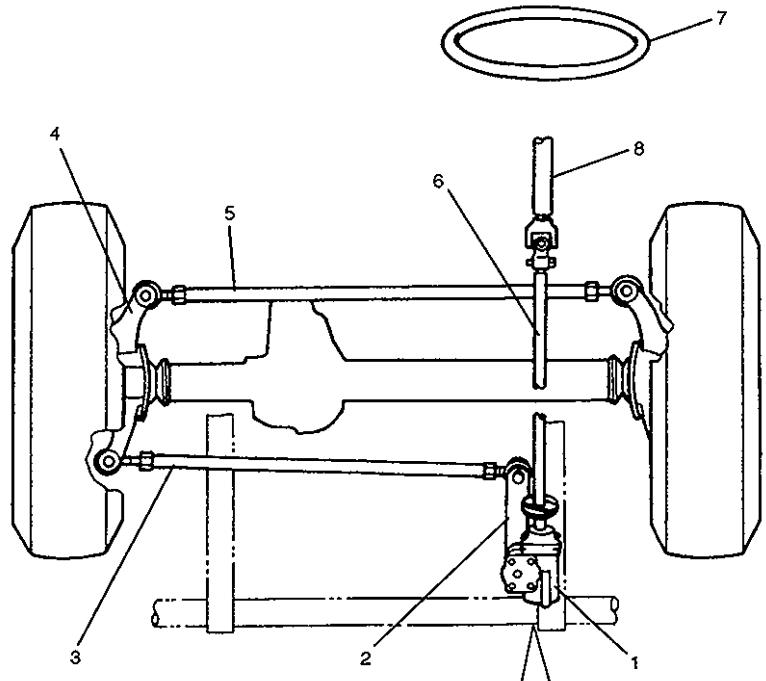

Steering gear box	Recirculating ball and nut type
Gear ratio	17.5 (mean)
Steering angle, inside	35° ± 3°
Steering angle, outside	32° ± 3°

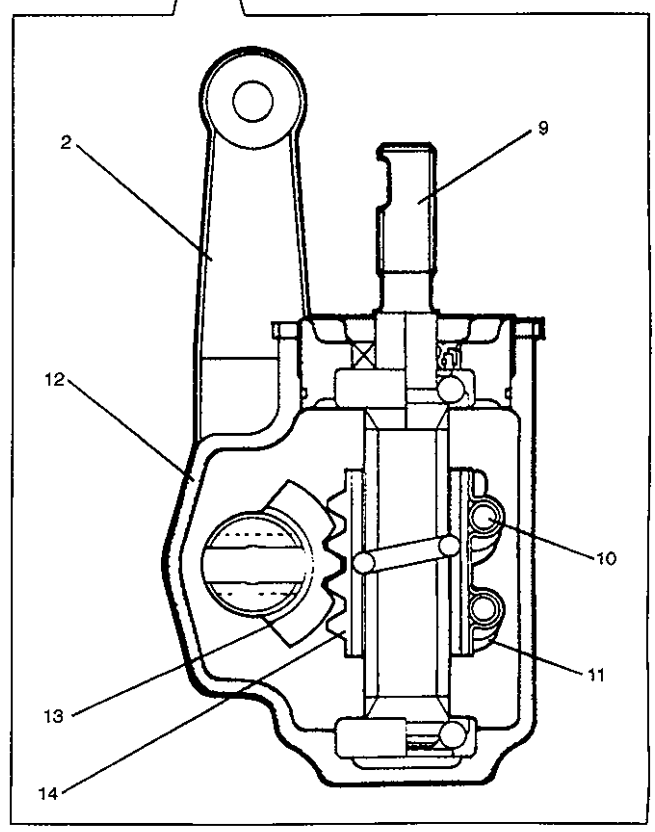

1. Steering gear box
2. Pitman arm
3. Drag rod
4. Knuckle arm
5. Tie rod
6. Steering lower shaft
7. Steering wheel
8. Steering upper shaft
9. Worm shaft
10. Ball
11. Ball nut
12. Gear case
13. Sector shaft
14. Rack gear

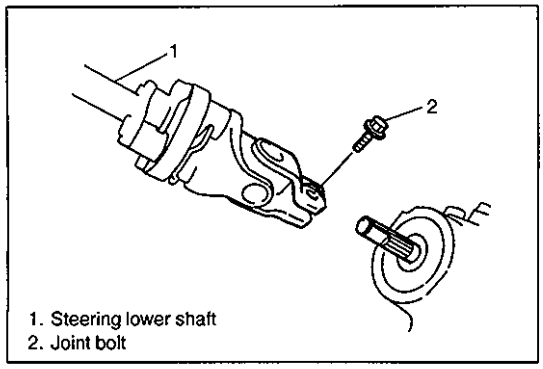

1. Steering lower shaft
2. Joint bolt

DIAGNOSIS

DIAGNOSIS TABLE

Refer to Section 3.

ON-VEVICLE SERVICE

STEERING GEAR BOX

REMOVAL

1) Remove steering lower shaft joint bolt.

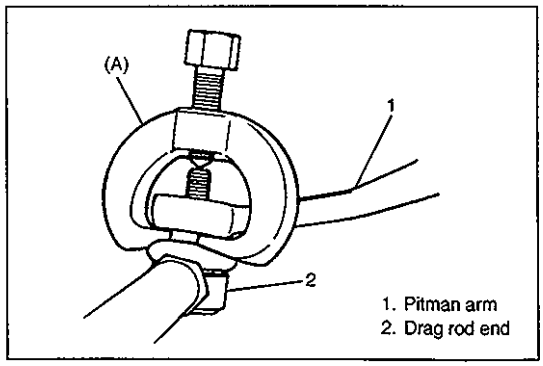

1. Pitman arm
2. Drag rod end

2) Remove drag rod end nut from pitman arm.
3) Disconnect drag rod end from pitman arm, using special tool.

Special Tool
(A): 09913-65210

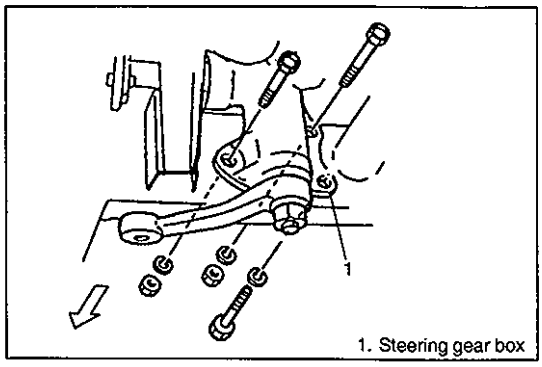

1. Steering gear box

4) Remove radiator support member.
5) Remove steering gear box bolts, and remove steering gear box.

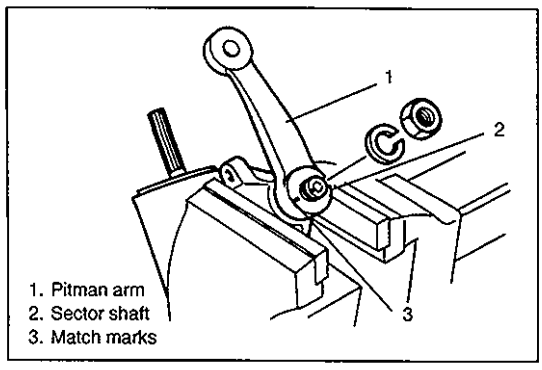

1. Pitman arm
2. Sector shaft
3. Match marks

6) Remove pitman arm mounting nut.
7) Make match marks on pitman arm and sector shaft, for a guide during reinstallation.
8) Remove pitman arm by using puller.

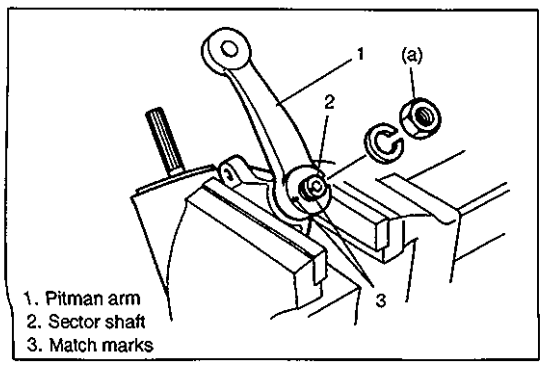

1. Pitman arm
2. Sector shaft
3. Match marks

INSTALLATION

Reverse removal procedure to install steering gear box.

1) Install pitman arm to sector shaft of steering gear box with match mark aligned as shown in figure and torque to specification.

Tightening Torque
(a): 135 N·m (13.5 kg-m, 98.0 lb-ft)

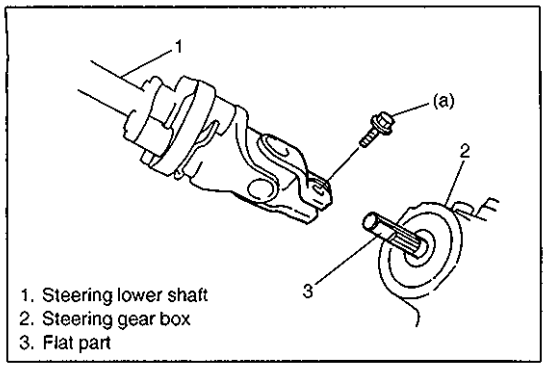

2) Install steering gear box to steering lower shaft joint.
Tighten joint bolt to specified torque.

NOTE:
Align flat part of steering gear box shaft with bolt hole of lower shaft joint as shown, Then insert gear box shaft into lower shaft joint.

Tightening Torque
(a): 25 N·m (2.5 kg-m, 18.0 lb-ft)

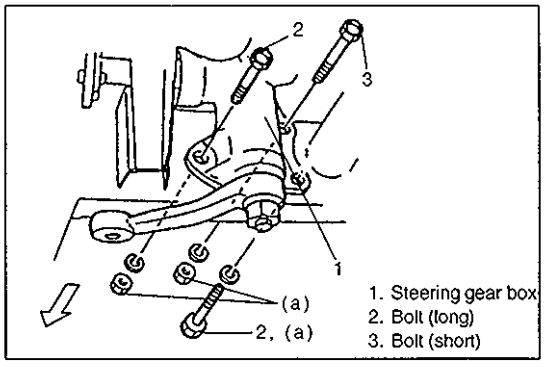

3) Install steering gear box mounting bolts with short bolt positioned as shown in figure.
Tighten nuts and bolt to specified torque.

Tightening Torque
(a): 80 N·m (8.0 kg-m, 58.0 lb-ft)

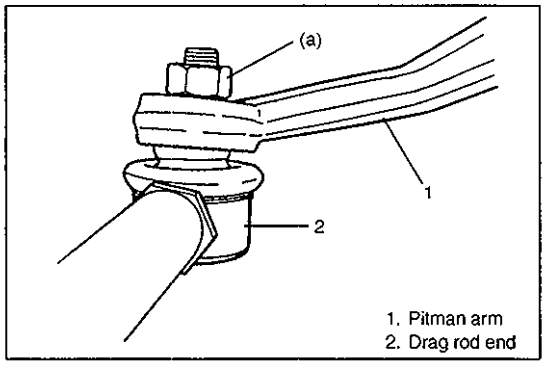

4) Install radiator support member.
5) Connect drag rod to pitman arm.
Tighten new drag rod end nut to specified torque.

NOTE:
To prevent ball stud from being rotated while tightening tie rod end nut, tighten Nut (M12×1.25) to about 20 N·m (2.0 kg-m, 14.5 lb-ft) and remove it.
Then tighten new nut to specified torque.

Tightening Torque
(a): 50 N·m (5.0 kg-m, 36.5 lb-ft)

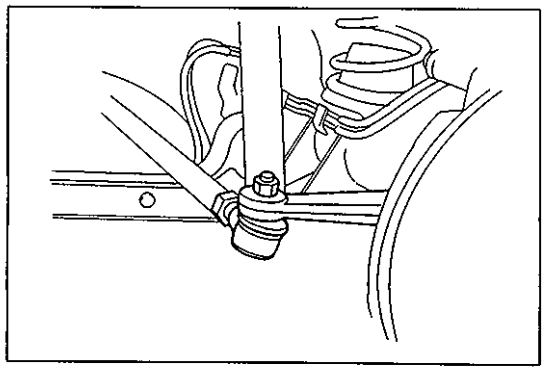

TIE ROD AND DRAG ROD

REMOVAL

1) Hoist vehicle and remove wheel (s).
2) Remove tie rod end nut from steering knuckle.

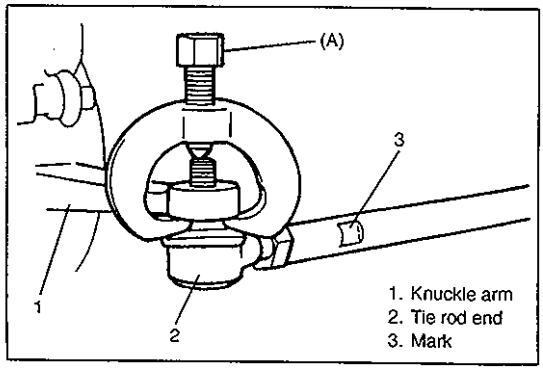

3) Mark one end of tie rod before removing the rod as shown in figure to distinguish the correct installing direction easy.
4) Disconnect tie rod end from knuckle, using special tool.

Special Tool
(A): 09913-65210

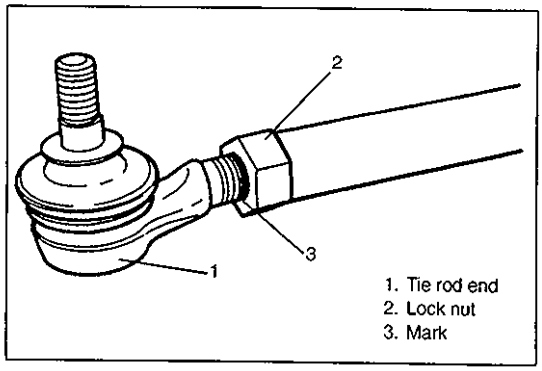

6) For ease of adjustment after installation, make marking of tie rod end lock nut position on tie rod thread. Then loosen lock nut and remove tie rod end from tie rod.

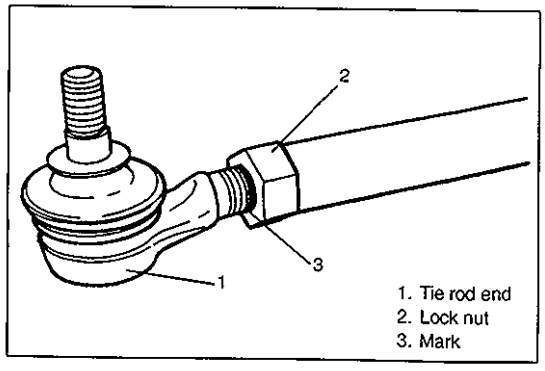

INSTALLATION

1) Install tie rod end lock nut and tie rod end to tie rod and/or drag rod. Align lock nut with mark on tie rod thread.

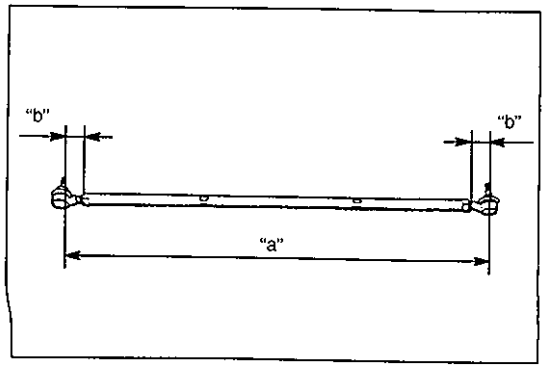

2) Adjust tie rod (and/or drag rod) length to the measurement shown in figure; then tighten tie rod end lock nuts temporarily by finger.

Length "a"
Tie rod : 1132 mm (44.6 in.)
Drag rod : 864.5 mm (34.0 in.)

NOTE:
Make the length "b" of right and left tie rod end the same.

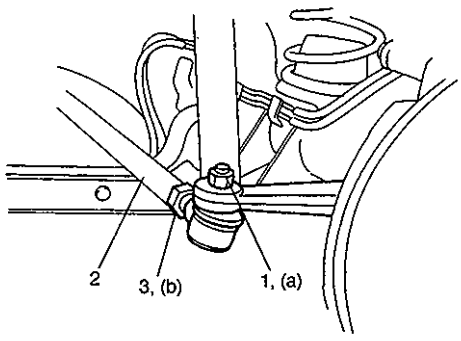

1. Nut
2. Tie rod
3. Tie rod end lock nut

3) Align lock nut with mark on tie rod thread and connect tie rod end to knuckle and/or pitman arm. Tighten new nut to specified torque.

NOTE:
To prevent ball stud from being rotated while tightening tie rod end nut, tighten Nut (M12×1.25) to about 20 N·m (2.0 kg-m, 14.5 lb-ft) and remove it.
Then tighten new nut to specified torque.

Tightening Torque
(a): 43 N·m (4.3 kg-m, 31.5 lb-ft)

4) Inspect for proper toe and steering angle (inside & outside). (Refer to FRONT END ALIGNMENT.)
Adjust tie rod and drag rod length as required, if necessary.
5) After confirming proper toe, tighten tie rod end lock nut to specified torque.

Tightening Torque
(b): 65 N·m (6.5 kg-m, 47.0 lb-ft)

6) Tighten wheel nuts to specified torque and lower hoist.

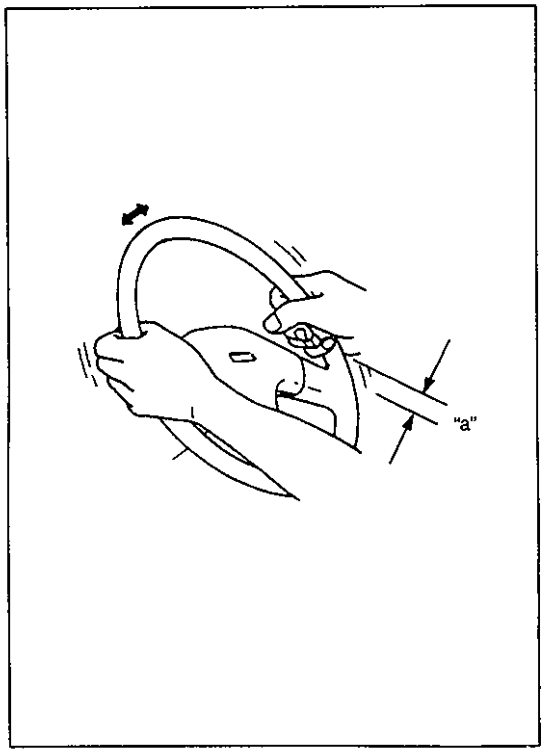

INSPECTION

STEERING WHEEL

Check steering wheel for play and rattle, holding vehicle in straight forward condition on ground.

Steering Wheel Play "a" : 10-30 mm (0.4-1.2 in.)

If play is not within specification, inspect for the following. If found defective, replace.

- Wear of tie rod end ball stud.
- Wear of king pin bearing
- Wear of steering shaft joint.
- Loosely install or joined parts.
- Wear of steering rack/sector gear.

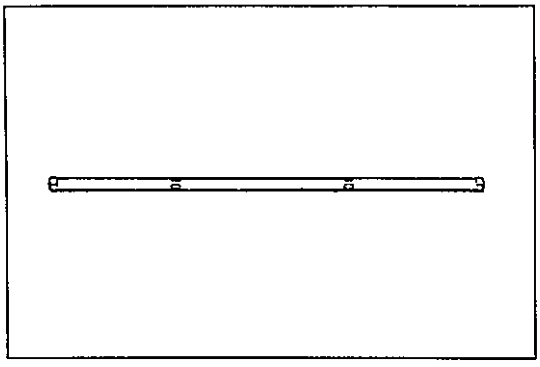

TIE ROD and DRAG ROD

Inspect deformation or damage. Replace any defective part.

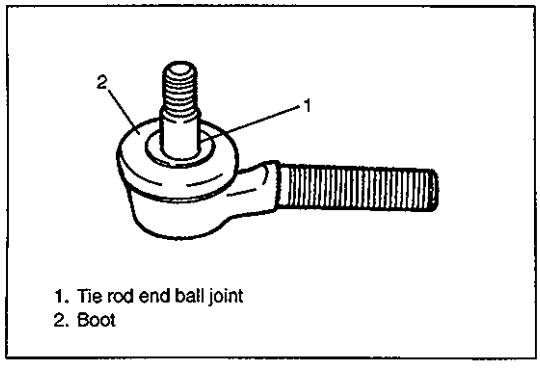

1. Tie rod end ball joint
2. Boot

TIE ROD and DRAG ROD END BALL JOINT

1) Inspect for play in tie rod end ball joint. If found defective, replace.
2) Inspect boot for tear. If even a small tear is noted, replace with new one.

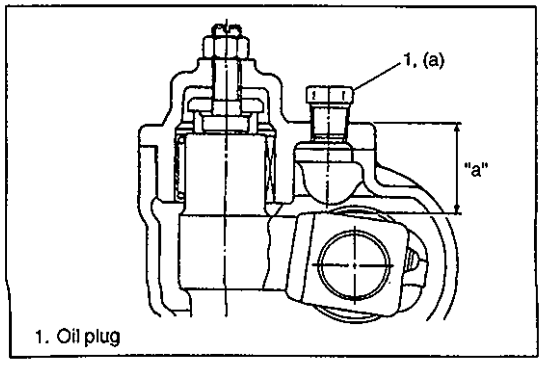

1. Oil plug

STEERING GEAR BOX

OIL LEVEL

Oil surface should be up to the level as shown in figure. If not, add prescribed gear oil, SAE 90.

Level "a" : 36 mm (1.42 in.)

Tightening Torque
(a) : 4 N·m (0.4 kg-m, 3.0 lb-ft)

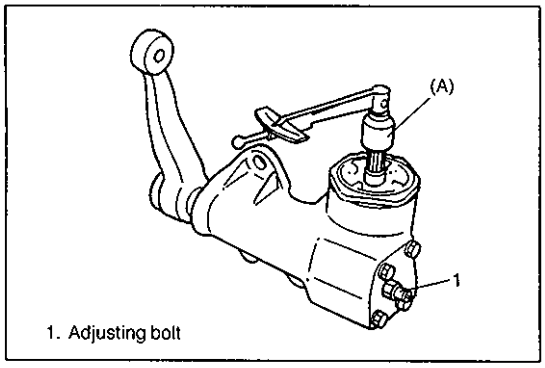

1. Adjusting bolt

ADJUSTMENT OF WORM SHAFT STARTING TORQUE

Steering gear box has adjusting bolt which gives preload to sector shaft.

Special Tool
(A): 09944-18211

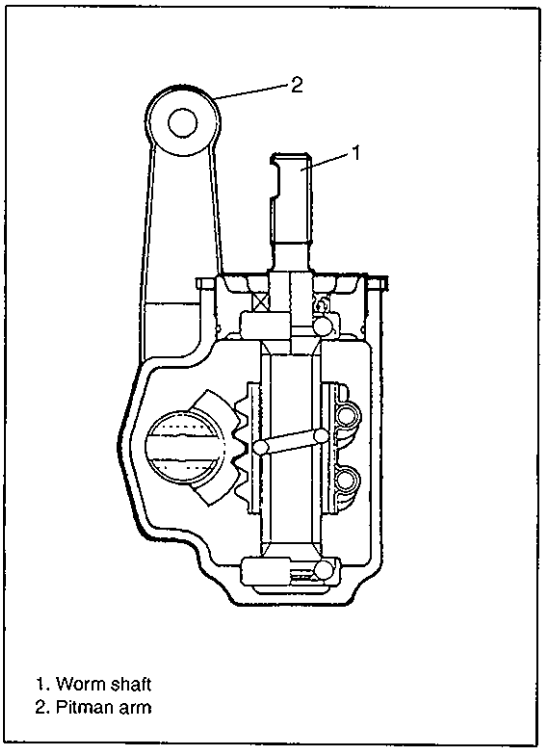

1. Worm shaft
2. Pitman arm

Make adjustment according to following procedure.

1) Check worm shaft to ensure that it is free from thrust play.
2) Position pitman arm in nearly parallel with worm shaft as shown. (With pitman arm in this position, front wheels are in straightforward state.)

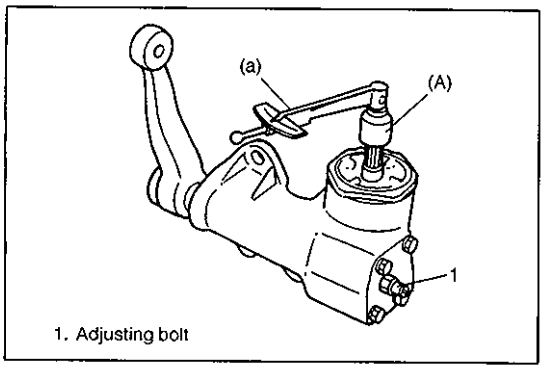

1. Adjusting bolt

3) Measure worm shaft starting torque from its position in straight forward state as described in 2).

Starting Torque for Worm shaft
(a): 50-100 N·cm (5.0-10.0 kg-cm, 0.4-0.7 lb-ft)

Special Tool
(A): 09944-18211

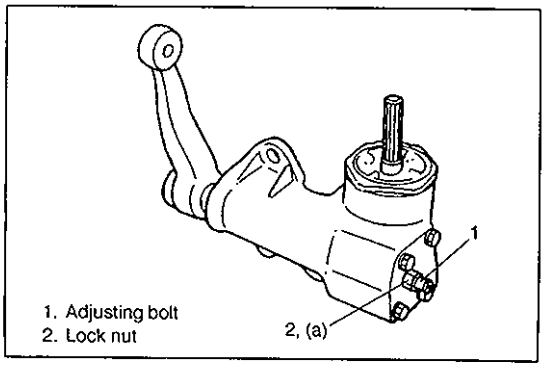

1. Adjusting bolt
2. Lock nut

If measured torque is not within specification, carry out adjustment with adjusting bolt to meet specification and check to confirm it again.

Tightening Torque
(a): 30 N·m (3.0 kg-m, 22.0 lb-ft)

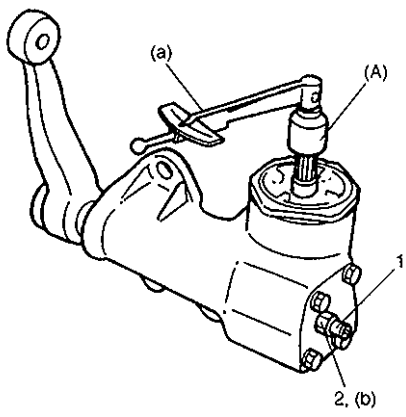

1. Adjusting bolt
2. Lock nut

4) If worm shaft starting torque is checked all right, another check should be carried out on worm shaft operating torque in its entire operating range (by turning worm shaft all the way to the right and left).

Worm Shaft (Including sector shaft) Operating Torque
(a) : Under 120 N·cm (12.0 kg-cm,10.9 lb-ft)

Special Tool
(A): 09944-18211

If measured torque does not conform to specification, readjust worm shaft starting torque in straightforward state by means of adjusting bolt, and then recheck worm shaft operating torque.

Tightening Torque
(b): 30 N·m (3.0 kg-m, 22.0 lb-ft)

If specified value is not attained even after readjustment, it is advisable to replace gear box with new gear box assembly.

TIGHTENING TORQUE SPECIFICATIONS

Fastening parts	Tightening torque		
	N·m	kg-m	lb-ft
Steering gear box oil plug	4	0.4	3.0
Steering gear box adjusting bolt lock nut	30	3.0	22.0
Pitman arm nut	135	13.5	98.0
Steering shaft joint bolt	25	2.5	18.0
Steering gear box nuts and bolt	80	8.0	58.0
Tie rod end (drag rod end) nut	43	4.3	31.5
Wheel nut	95	9.5	69.0
Tie rod end lock nut	65	6.5	47.0

SPECIAL TOOLS

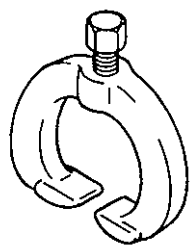

09913-65210
Tie-rod end remover

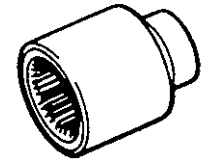

09944-18211
Pinion torque checking socket

SECTION 3B1

POWER STEERING (P/S) SYSTEM (If equipped)

WARNING:
For vehicles equipped with Supplemental Restraint (Air Bag) System:

- **Service on and around the air bag system components or wiring must be performed only by an authorized SUZUKI dealer. Refer to "Air Bag System Components and Wiring Location View" under "General Description" in air bag system section in order to confirm whether you are performing service on or near the air bag system components or wiring. Please observe all WARNINGS and "Service Precautions" under "On-Vehicle Service" in air bag system section before performing service on or around the air bag system components or wiring. Failure to follow WARNINGS could result in unintentional activation of the system or could render the system inoperative. Either of these two conditions may result in severe injury.**
- **Technical service work must be started at least 90 seconds after the ignition switch is turned to the "LOCK" position and negative cable is disconnected from the battery. Otherwise, the system may be activated by reserve energy in the Sensing and Diagnostic Module (SDM).**

NOTE:
All steering gear fasteners are important attaching parts in that they could affect the performance of vital parts and systems, and/or could result in major repair expense. They must be replaced with one of the same part number or with an equivalent part if replacement becomes necessary. Do not use a replacement part of lesser quality or substitute design. Torque values must be used as specified during reassembly to assure proper retention of these parts.

CONTENTS

GENERAL DESCRIPTION 3B1- 2
DIAGNOSIS 3B1- 3
Diagnosis Table 3B1- 3
ON-VEHICLE SERVICE 3B1- 5
Steering Wheel Inspection 3B1- 5
Steering Force Inspection 3B1- 5
Power Steering Belt Inspection 3B1- 5
Power Steering Fluid Level Inspection 3B1- 6
Idle-up System Inspection 3B1- 6
Power Steering Fluid Leakage Inspection 3B1- 6
Air Bleeding 3B1- 7
Hydraulic Pressure Inspection 3B1- 9
Power Steering (P/S) Pump 3B1-10
Power Steering Gear Box 3B1-15
TIGHTENING TORQUE SPECIFICATIONS 3B1-17
REQUIRED SERVICE MATERIAL 3B1-17
SPECIAL TOOLS 3B1-17

GENERAL DESCRIPTION

The power steering system in this vehicle reduces the driver's effort needed in turning the steering wheel by utilizing the hydraulic pressure generated by the power steering (P/S) pump which is driven by the engine. It is an integral type with the mechanical gear unit, hydraulic pressure cylinder unit and control valve unit all housed in the gear box.

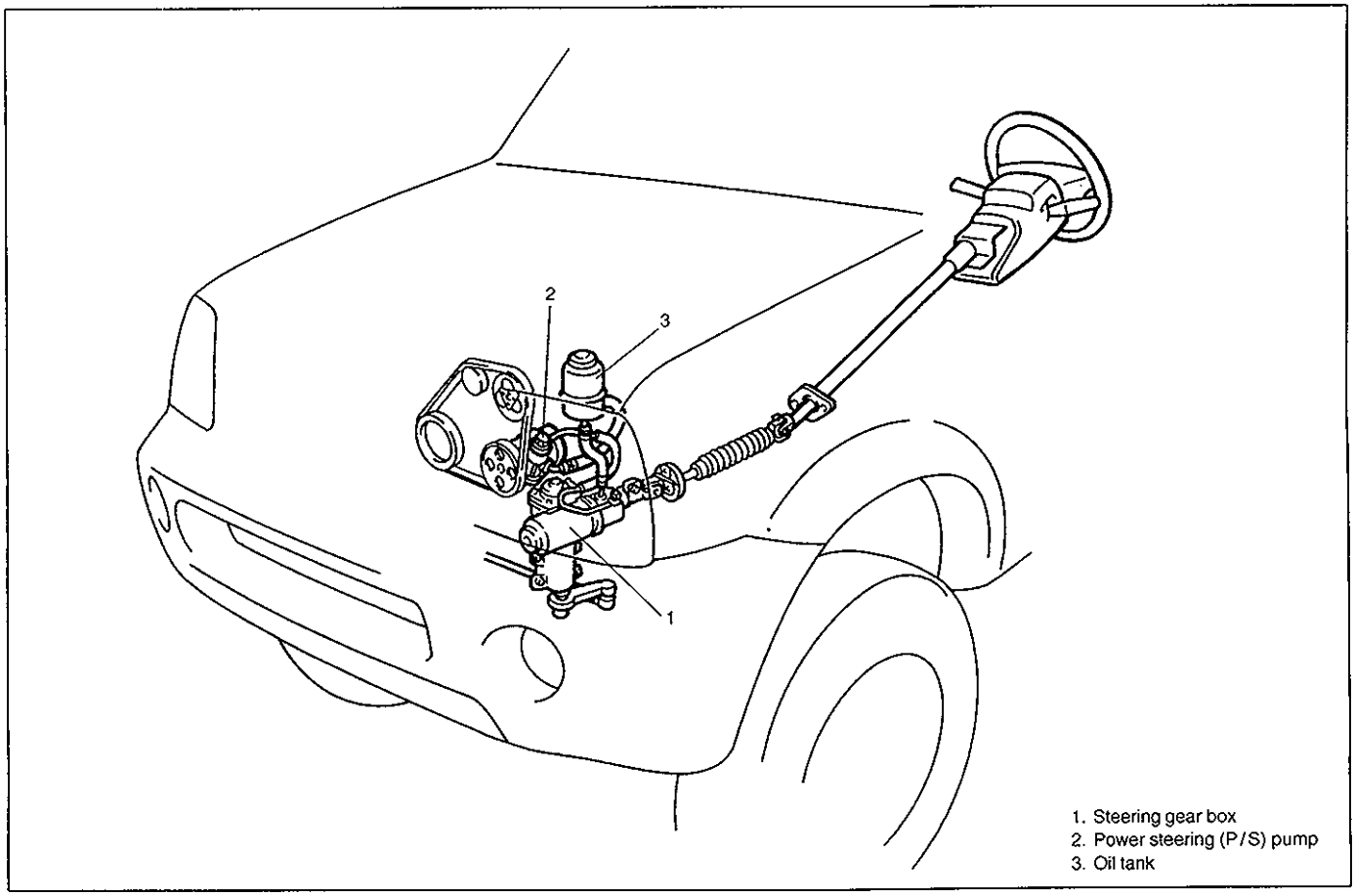

1. Steering gear box
2. Power steering (P/S) pump
3. Oil tank

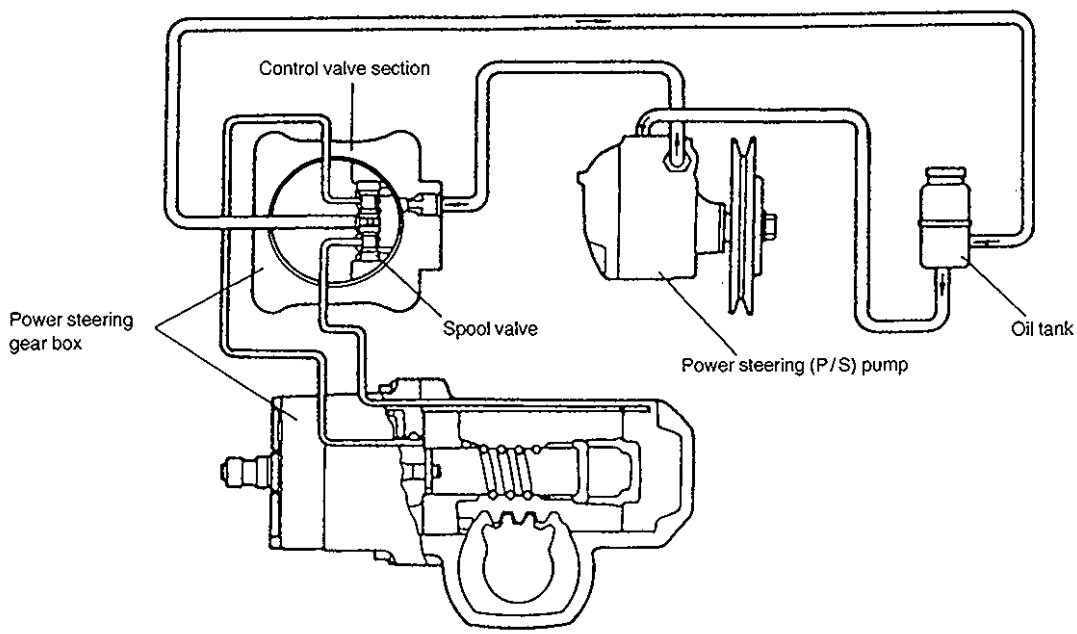

DIAGNOSIS

DIAGNOSIS TABLE

Condition	Possible Cause	Correction
Steering wheel feels heavy (at low speed)	1. Fluid pipes, hoses, belt	
	• Fluid deteriorated, low viscosity, different type of fluid mixed	• Change fluid.
	• Pipes or hoses deformed, air entering through joint	• Correct or replace.
	• Insufficient air bleeding from piping	• Bleed air.
	• Belt worn, lacking in tension	• Adjust belt tension or replace belt as necessary.
	2. Tire inflation pressure, wheel alignment, steering wheel	
	• Tire inflation pressure too low	• Inflate tire.
	• Wheel alignment out of adjustment	• Adjust front wheel alignment.
	• Steering wheel installed improperly (twisted)	• Install steering wheel correctly.
	3. P/S pump hydraulic pressure	
	• Hydraulic pressure failing to rise • Slow hydraulic pressure rise	• Replace P/S pump.
	NOTE: **Be sure to warm up engine fully before performing this check. Pump vanes are sometimes hard to come out where temperature is low.**	
Steering wheel feels heavy momentarily when turning it to the left or right.	1. Fluid, belt	
	• Air drawn in due to insufficient amount of fluid	• Add fluid and bleed air.
	• Slipping belt	• Adjust belt tension or replace belt as necessary.
No idle-up **NOTE:** **Acceptable if idling speed does not drop.**	• Defective pressure switch	• Replace pressure switch (terminal set).

Condition		Possible cause	Correction
Steering wheel returns slowly from turns. **NOTE:** **Turn steering wheel 90° at 35 km/h and let it free. If it returns more than 60° then, it is normal.**		• Dust or foreign object mixed in fluid • Deformed pipes or hoses • Steering column installed improperly • Wheel alignment maladjusted • Linkage or joints not operating smoothly	• Change fluid. • Correct or replace. • Install correctly. • Adjust. • Correct.
Vehicle pulls to one side during straight driving.		• Low or uneven tire inflation pressure • Wheel alignment maladjusted • Defective spool valve	• Inflate tire(s) as necessary. • Adjust. • Replace gear box assembly.
Steering wheel play is large and vehicle wanders.		• Loose steering shaft nut • Loose linkage or joint • Loose gear box fixing bolt • Front wheel bearing worn	• Retighten. • Retighten. • Retighten. • Replace.
Fluid leakage		• Loose joints of hydraulic pressure pipes and hoses • Deformed or damaged pipes or hoses • Gear box	• Retighten. • Correct or replace. • Replace gear box assembly.
Abnormal noise	Buzzing noise	• Air drawn in due to insufficient fluid • Air drawn in through pipe or hose joints	• Replenish fluid. • Retighten or replace.
	Chittering noise Squeaking noise	• Belt slipping (loose) • Worn belt	• Adjust. • Replace.
	Rattling noise Jerking noise	• Loose steering linkage • Loose gear box fixing bolt • Loose pitman arm • Pipes or hoses in contact with chassis	• Retighten. • Retighten. • Retighten. • Correct.
	Clattering noise Hissing noise Whistling noise	• Defective pump vane • Malfunction of flow control valve • Defective pump shaft bearing	• Replace pump assembly. • Replace gear box assembly. • Replace pump assembly.
	NOTE: Some hissing noise may be heard through steering column when turning steering wheel with vehicle halted. It is from operation of the valve in the gear box and indicates nothing abnormal.		

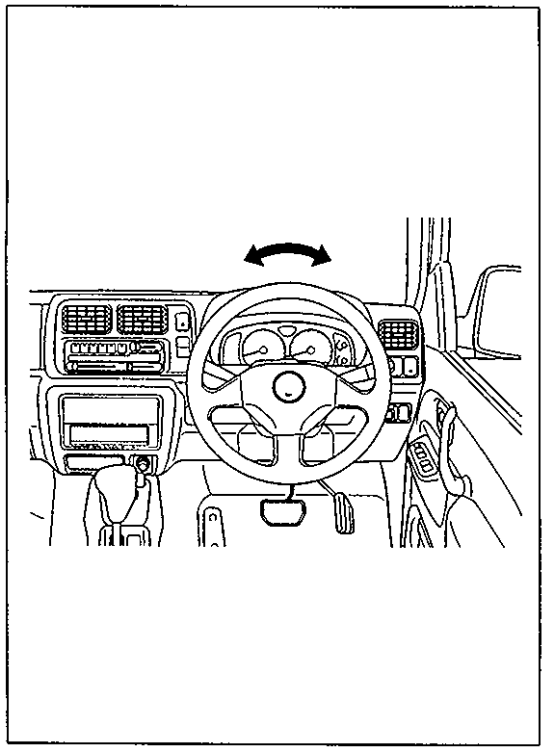

ON-VEHICLE SERVICE

STEERING WHEEL INSPECTION

- With engine ON, check steering wheel play as follows. Move steering wheel to the right and left from its straight position and measure along its circumference how much it must be turned before tires start to move. It should be as specified below.

  Steering wheel play "a": 30 mm (1.18 in.) or less

- Also, check steering wheel for looseness or rattle by trying to move it in its column direction and forward direction.

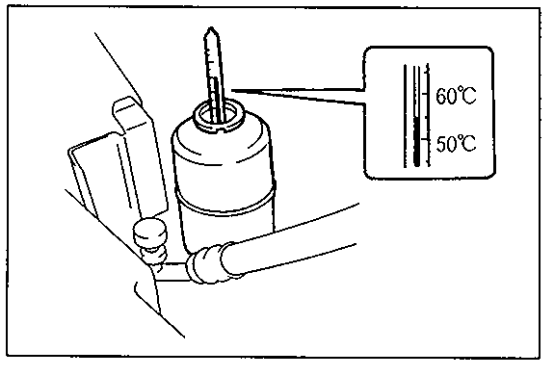

STEERING FORCE INSPECTION

1) Place vehicle on level concreted road and set steering wheel at straight position.
2) Check that tire inflation pressure is as specified (Refer to tire placard).
3) Start engine and keep it running till power steering fluid is warmed to 50 to 60° (122 – 140°F).

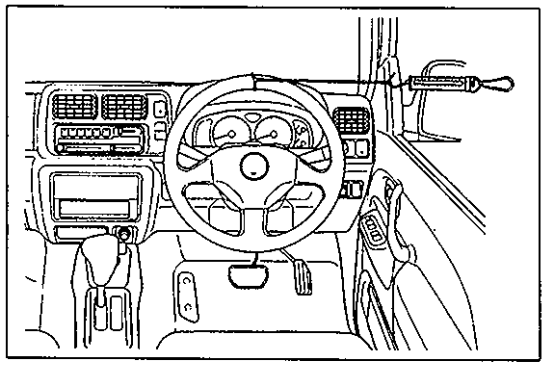

4) With engine running at idling speed, measure steering force by pulling spring balancer hooked on steering wheel in tangential direction.

   Steering force: Less than 6.0 kg (13.2 lb)

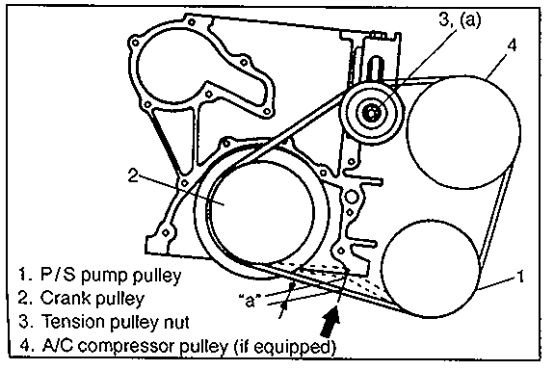

POWER STEERING BELT INSPECTION

- Check that belt is free from any damage and properly fitted in pulley groove.
- Check belt tension by measuring how much it deflects when pushed at mid-point between P/S pump pulley and crank pulley with about 10 kg (22 lb) force.

  Deflection of oil pump belt "a": 6 – 9 mm (0.25 – 0.35 in.)

  Tightening Torque
  (a): 50 N·m (5.0 kg-m, 36.5 lb-ft)

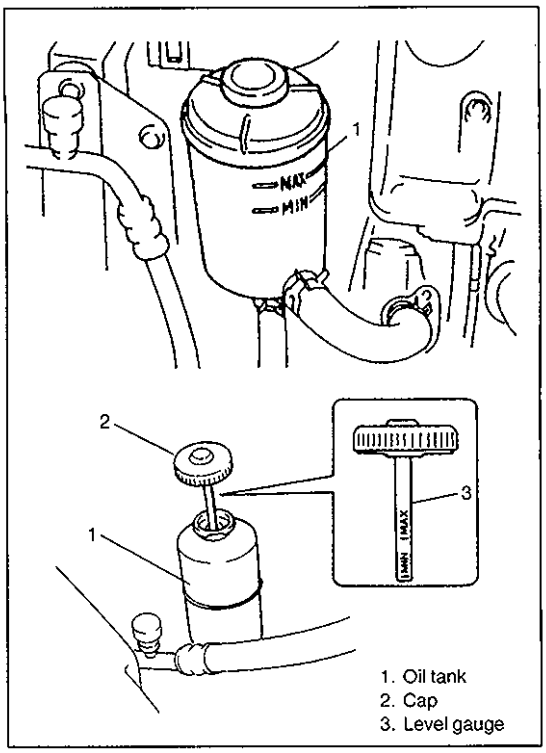

POWER STEERING FLUID LEVEL INSPECTION

With engine stopped check fluid level indicated on oil tank or level gauge, which should be between MAX and MIN marks. If it is lower than lower limit (MIN), replenish fluid up to upper limit (MAX) mark.

CAUTION:
- **Make sure to use an equivalent of DEXRON®-II, DEXRON®-IIE or DEXRON®-III for P/S fluid.**
- **Fluid level should be checked when fluid is cool before starting engine.**

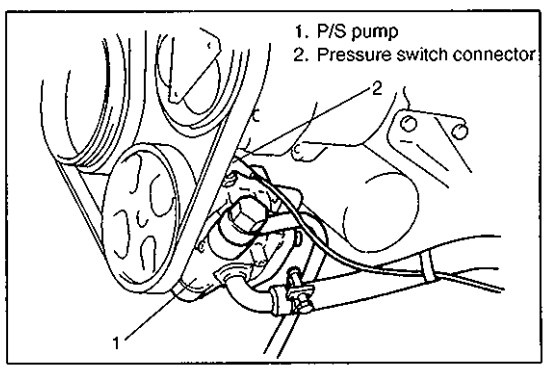

IDLE-UP SYSTEM INSPECTION

1) Warm up engine to normal operating temperature.
2) Turn A/C switch OFF, if equipped.
3) Turn steering wheel fully and check idle speed.
   Engine idle speed drops a little momentarily when steering wheel is turned fully but returns to its specified level immediately. If power steering pressure switch connector is connected, check the same with that connector disconnected. Momentary drop of engine idle speed should be less when it is connected than when disconnected.

POWER STEERING FLUID LEAKAGE INSPECTION

Start engine and turn steering wheel fully to the right and left so that maximum hydraulic pressure is applied to system. Then visually check gear box, P/S pump and oil tank respectively and each joint of hydraulic pressure piping for leakage. During this check, however, never keep steering wheel turned fully for longer than 10 seconds.

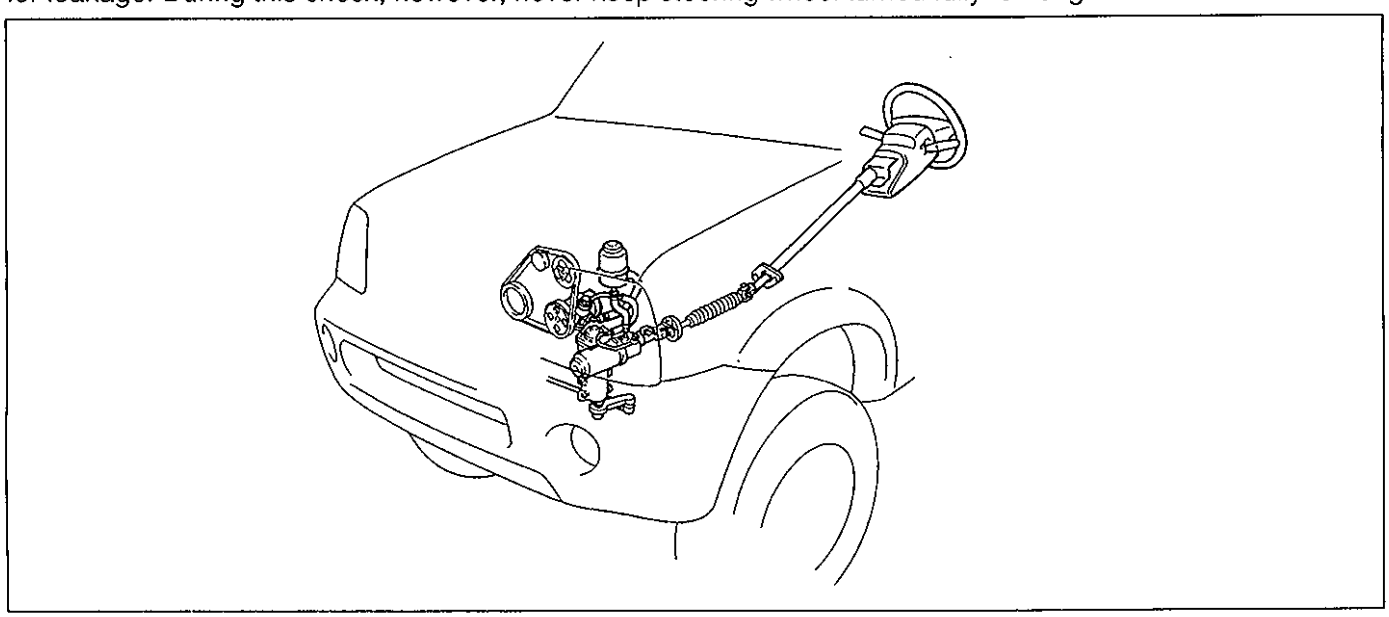

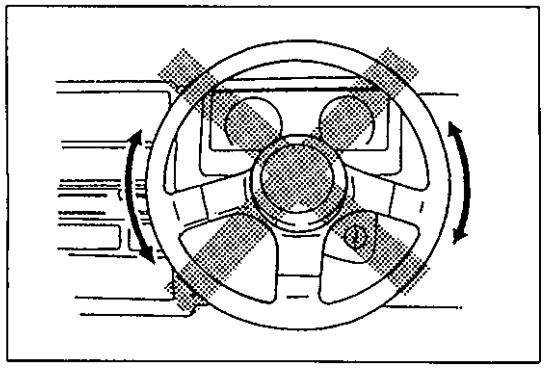

AIR BLEEDING

Air Bleeding from system

NOTE:
Bleed air from system when P/S system has been serviced in any way other than replacement of steering gear box (e.g., disconnection of piping, replacement of P/S pump). Never operate steering system while servicing. Or Air Bleeding from gear box must be performed.

1) Jack up the front end of vehicle and apply rigid rack.
2) Fill oil tank with fluid up to specified level.
3) With engine running at idling speed, add fluid up to specified level.
4) When fluid stops reducing, stop engine and leave P/S system as it is for about 10 minutes.
5) After running engine at idling speed for 1 minute, stop it.
6) As a final step, check to make sure that fluid is up to specified level.

> **CAUTION:**
> **When air bleeding is not complete, it is indicated by foaming fluid on level gauge or humming noise from P/S pump.**

7) Check steering condition and P/S system for fluid leakage.

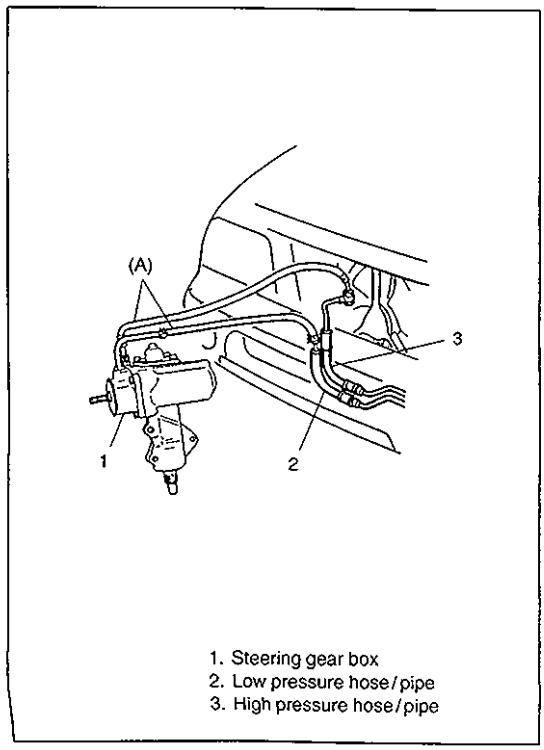

1. Steering gear box
2. Low pressure hose/pipe
3. High pressure hose/pipe

Air Bleeding from gear box

NOTE :
Bleed air from gear box:
- **When steering gear box has been replaced with a new one.**
- **When entry of air into hydraulic circuit of steering gear box is suspected.**

1) Remove steering gear box from vehicle referring to item P/S GEAR BOX REMOVAL in this SECTION.
2) Install special tool as shown.

   Special Tool
   (A): 09945-35010

3) After running engine at idling speed for 3 to 5 seconds, stop it and add fluid up to specified level. Repeat this step a few times.

   NOTE:
   Don't operate steering system for this step.

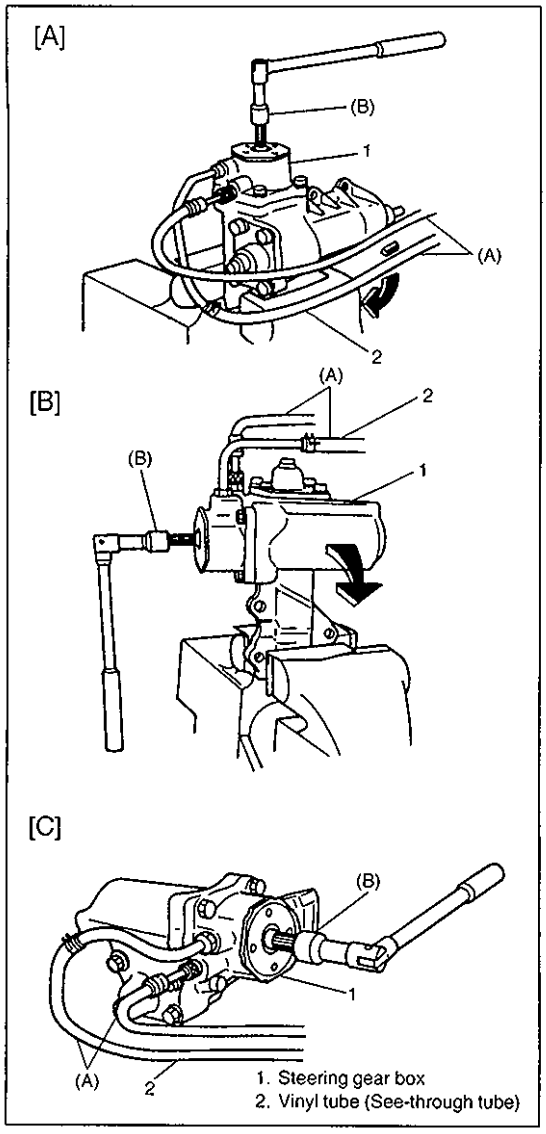

1. Steering gear box
2. Vinyl tube (See-through tube)

4) Set steering gear box to state [A] as shown.
5) With engine running at idling speed, turn input shaft by using special tool in both directions as far as it locks till all foams are gone.

NOTE:
- **Add fluid into oil tank whenever its level lowers while servicing.**
- **Turn input shaft till it locks, return it a little and turn it again in the same direction till it locks. Repeat this some times.**

Special Tool
(B): 09944-18211

6) Perform Step 5) but with steering gear box in state [B] this time and then in state [C].

NOTE:
To change of state of gear box from [A] to [B] and from [B] to [C], turn gear box in arrow direction in figures [A] and [B].

7) Set input shaft at neutral position (straight position).

NOTE:
As input shaft makes 4 full turns from lock to lock, neutral position is obtained by turning it till it locks and turning it back by 2 full turns.

8) Remove (special) tools and install steering gear box to vehicle and P/S pipe/hose to steering gear box referring to item P/S GEAR BOX INSTALLATION.

NOTE:
- **Don't install pitman arm and steering lower shaft to steering gear box.**
  Installation of these parts will cause input shaft and/or sector shaft to turn, allowing air to enter gear box.
- **Plug up opening after pipe or hose disconnection.**

9) Bleed air in P/S system. For details, refer to step 1) to 7) of AIR BLEEDING FROM SYSTEM.
10) Install pitman arm and steering lower shaft to steering gear box.

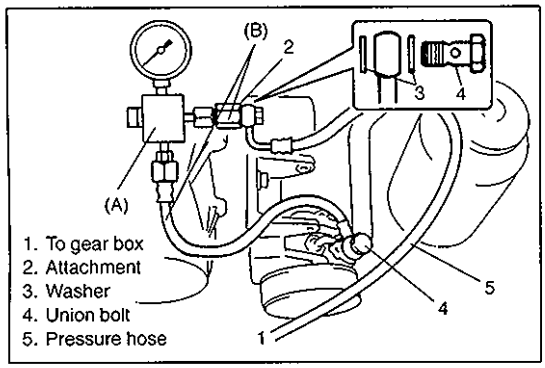

HYDRAULIC PRESSURE INSPECTION

1) Clean where pipe is connected thoroughly, then disconnect high pressure hose from high pressure pipe connector and connect oil pressure gauge (special tool) as shown.

Special Tool
(A): 09915-77410
(B): 09915-77420

2) Bleed air.

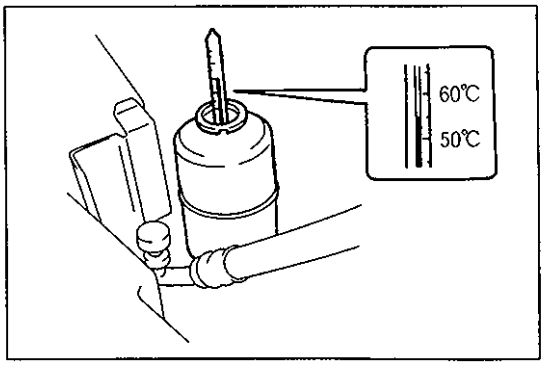

3) With engine running at idling speed, keep turning steering wheel to the right and left till fluid in oil tank is warmed to 50 to 60°C (122 – 140°F).

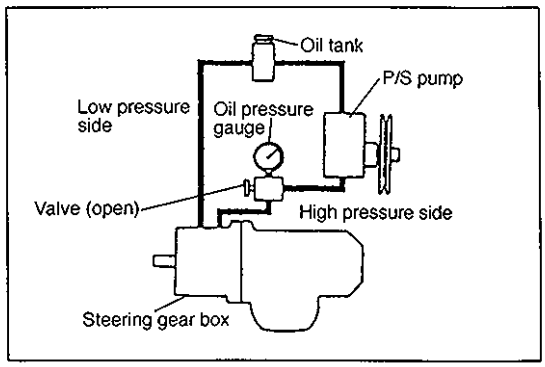

4) Back pressure check
With engine running at idling speed and hands off from steering wheel, check hydraulic pressure.

Back pressure: 980 kPa (10 kg/cm^2, 142 psi)

If back pressure exceeds 980 kPa (10 kg/cm^2, 142 psi), check control valve and pipes for obstruction.

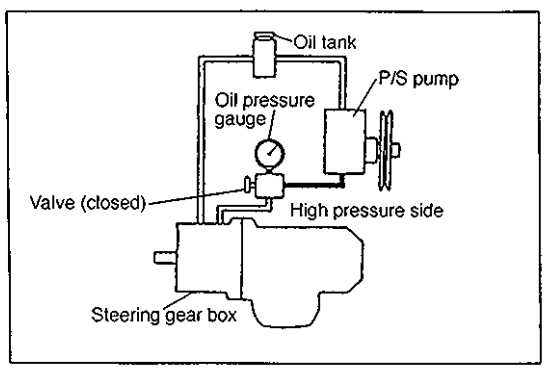

5) Relief pressure check
- Increase engine speed to about 1,500 to 1,600 rpm.
  Close valve gradually while watching pressure increase indicated on gauge and take reading of relief pressure (maximum hydraulic pressure).

  Relief pressure: 4,900 – 6,800 kPa
  (50 – 70 kg/cm^2, 710 – 990 psi)

- If higher than 6,800 kPa (70 kg/cm^2, 990 psi), malfunction of relief valve.
- If lower than 4,900 kPa (50 kg/cm^2, 710 psi), failure of P/S pump or settling of relief valve spring.

CAUTION:
Be sure not to keep gauge valve closed for longer than 10 seconds.

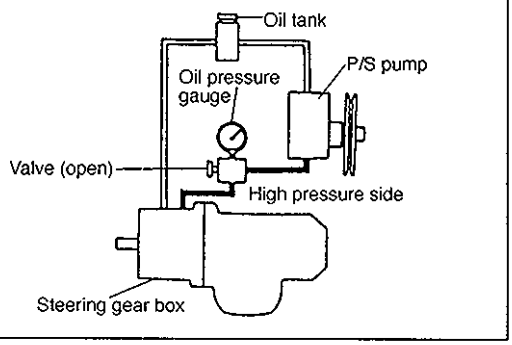

- Next, open gauge valve fully and increase engine speed to about 1,500 to 1,600 r/min. Then turn steering wheel to the left or right fully and take reading of relief pressure.
  Relief pressure: 4,900 – 6,800 kPa (50 – 70 kg/cm^2, 710 – 990 psi)
- If lower than 4,900 kPa (50 kg/cm^2, 990 psi), failure in steering gear.

CAUTION:
Never keep steering wheel turned fully for longer than 10 seconds.

POWER STEERING (P/S) PUMP

REMOVAL

1) Take out fluid in oil tank with syringe or such.
2) Remove P/S belt.
3) Disconnect high pressure hose and low pressure hose.
4) Disconnect pressure switch lead harness.
5) Remove P/S pump bracket with P/S pump (by removing 2 bolts).

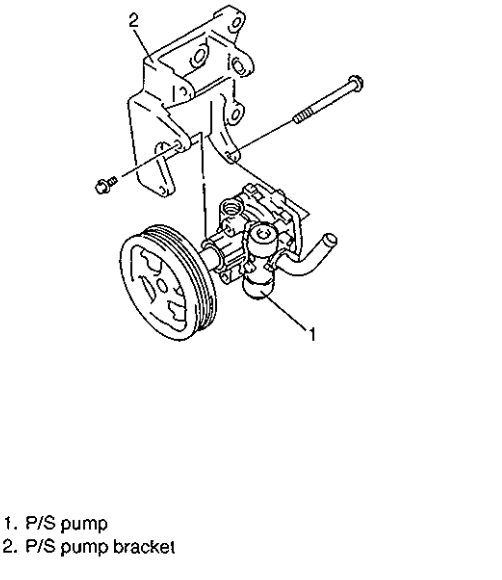

1. P/S pump
2. P/S pump bracket

CAUTION:
- **Clean couplers at intake and discharge ports completely before disconnection.**
- **Plug ports of removed pump to prevent dust and any foreign object from entering.**

DISASSEMBLY

1) Clean its exterior thoroughly.
2) With aluminum plates placed on vise first, grip pump case with it.
3) Remove suction connector and O-ring from pump body.
4) Remove power steering pressure switch from pump body.
5) Remove relief valve (flow control valve) and spring from pump body.
6) Remove pump cover, O-ring and cam ring from pump body.
7) Remove vanes from rotor.
8) Remove snap ring from pump shaft and pull out rotor and pulley (shaft).
9) Remove side plate and O-ring from pump body.
10) Remove oil seal from pump body.

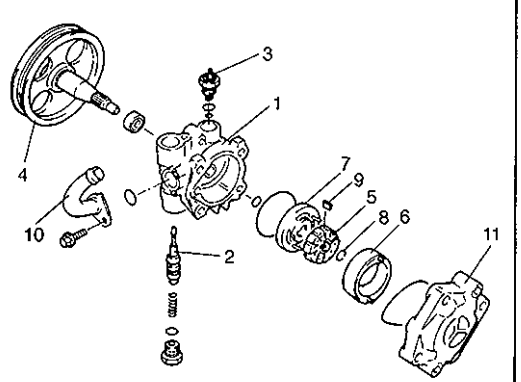

1. Pump body
2. Relief valve
3. Pressure switch
4. Pulley (pump shaft)
5. Rotor
6. Cam ring
7. Side plate
8. Snap ring
9. Vane
10. Suction connector
11. Pump cover

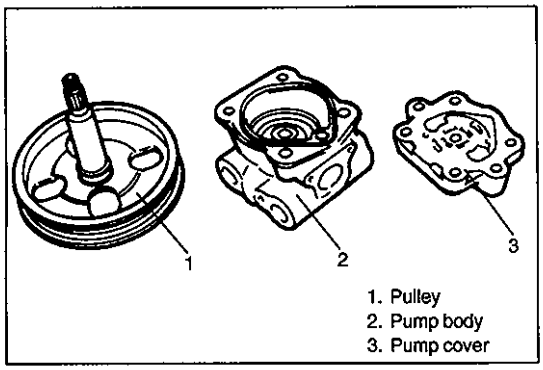

1. Pulley
2. Pump body
3. Pump cover

INSPECTION

Pump Body, Cover and Shaft

Check sliding surfaces of each part for wear and damage.
If any defect is found, replace pump assembly.

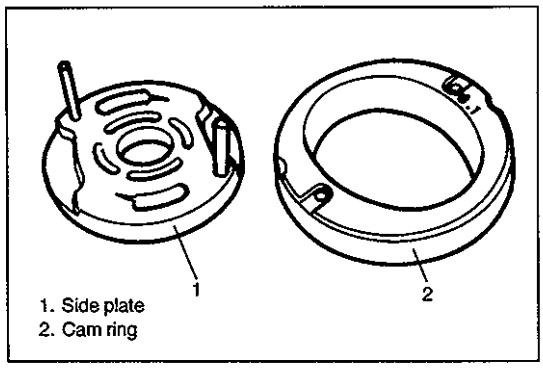

1. Side plate
2. Cam ring

Cam Ring and side plate

Check vane sliding surface of cam ring for wear and damage.
If any defect is found, replace pump assembly.

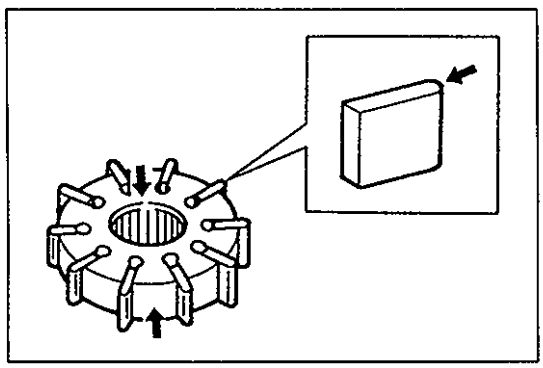

Rotor and Vane

- Check sliding surfaces of rotor and vane for wear and damage.

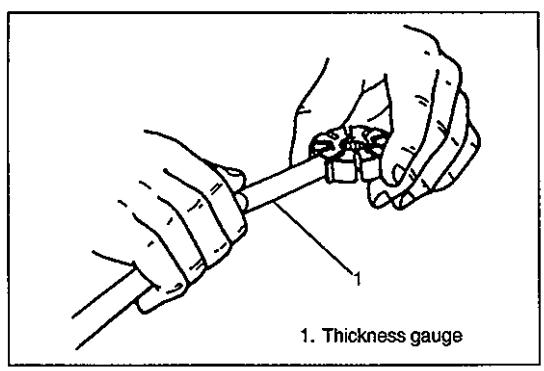

1. Thickness gauge

- Check clearance between rotor and vane.

Clearance: Standard 0.01 mm (0.0004 in.)
Limit 0.06 mm (0.0023 in.)

Replace pump assembly if any defect is found in above checks.

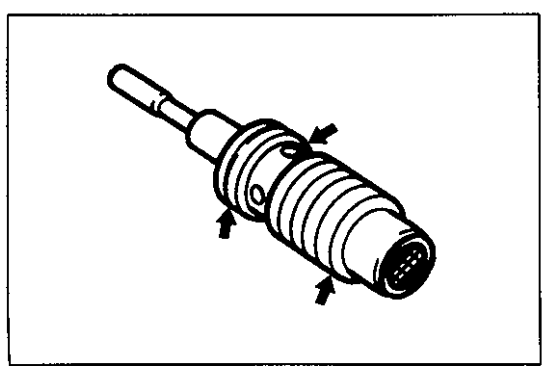

Relief valve (Flow Control Valve) and Its spring

- Check fluid passage of relief valve and orifice of connector for obstruction (clogged).
- Check sliding surface of relief valve for wear and damage.

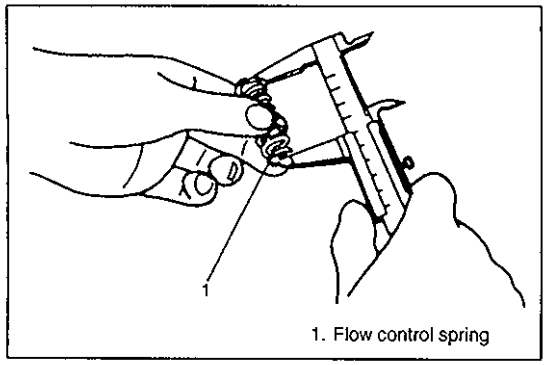

1. Flow control spring

- Check free length of relief valve spring.

Free length:	**Standard**	**36.5 mm (1.44 in.)**
	Limit	**33.5 mm (1.32 in.)**

Replace pump assembly if any defective is found.

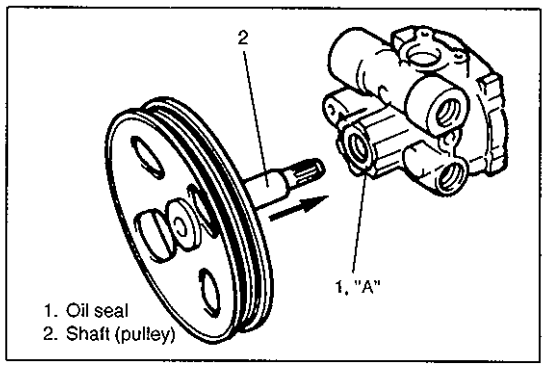

1. Oil seal
2. Shaft (pulley)

ASSEMBLY

Reverse disassembly procedure for assembly, noting the following.

1) Apply power steering fluid to shaft outer surface and grease to oil seal lip and insert it from oil seal side.

   "A": Grease 99000-25010

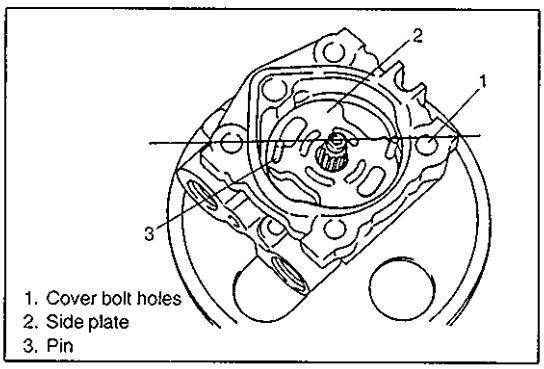

1. Cover bolt holes
2. Side plate
3. Pin

2) Apply power steering fluid to O-rings and fit them to pump body.
3) Install side plate to pump body.

   NOTE :
   Carefully align the dowel pins on the side plate at bolt hole as shown in figure.

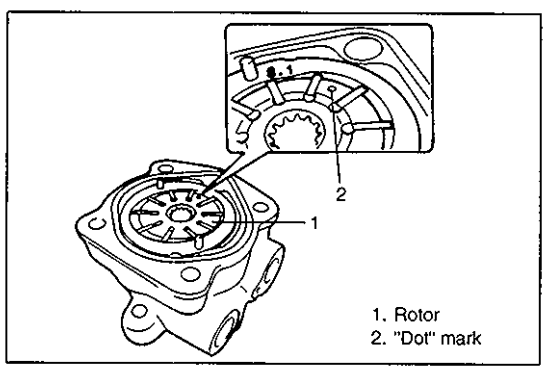

1. Rotor
2. "Dot" mark

4) Apply power steering fluid to sliding surface of rotor.
5) Install rotor to shaft, directing "dot" marked side of rotor toward pump cover (facing up).
6) Install new snap ring to shaft, then make sure to fit snap ring into shaft groove securely.

   NOTE :
   Never reuse the removed snap ring.

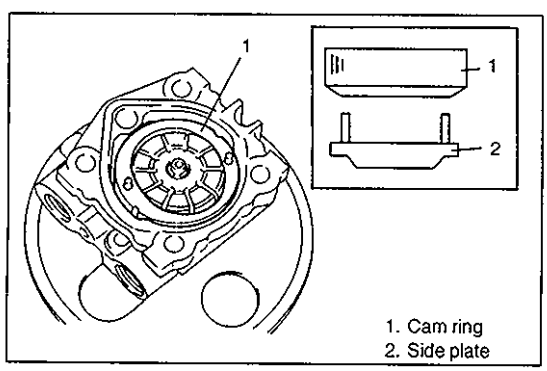

1. Cam ring
2. Side plate

7) Apply power steering fluid to sliding surface of cam ring.
8) Install cam ring to pump body. The tapered end of cam ring should face the side plate.

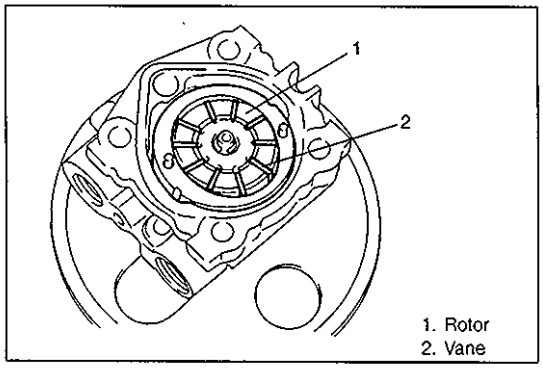

9) Apply power steering fluid to each vane.
10) Install vanes (10 pipes) to rotor.

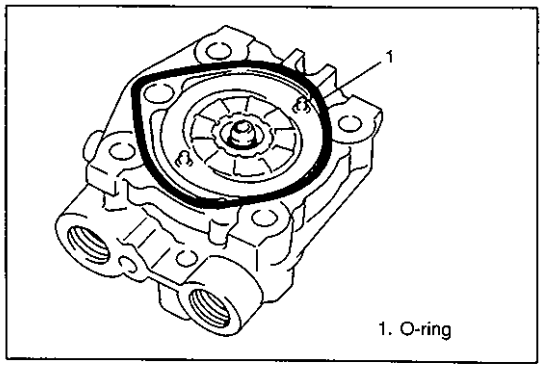

11) Apply power steering fluid to O-ring and fit it to pump body.
12) Install O-ring to pump body.

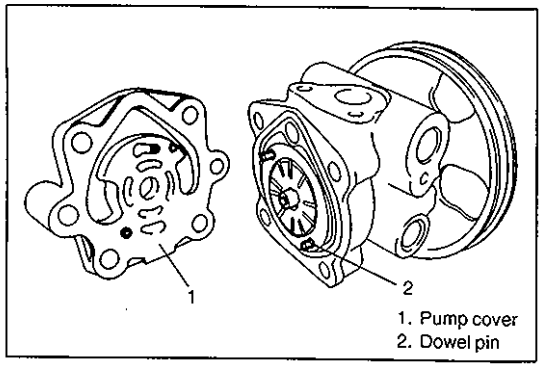

13) Apply power steering fluid to sliding surface of pump cover and rotor.
14) Match the dowel pins to the holes of the cover plate as shown and install pump cover to pump body.

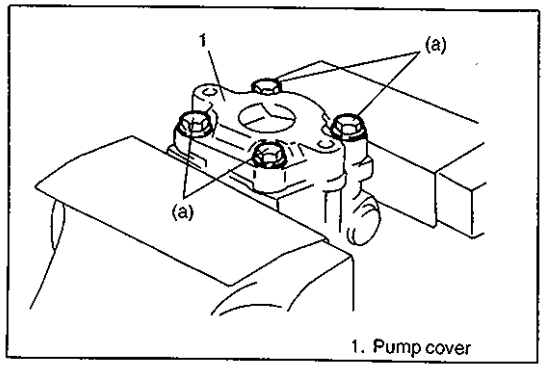

15) Tighten pump cover bolts to specified torque.
NOTE:
After installing pump cover, check to make sure that shaft can be turned by hand.
Tighten Torque
(a): 28 N·m (2.8 kg-m, 20.0 lb-ft)

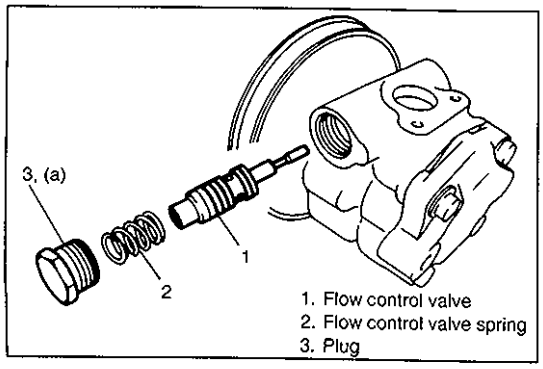

16) Apply power steering fluid to relief valve (flow control valve).
17) Install relief valve (flow control valve) to pump body.
NOTE:
Check that relief valve (flow control valve) slides smoothly.
18) Apply power steering fluid to O-ring of plug.
19) Install O-ring to plug.
20) Tighten plug to specified torque.
Tightening Torque
(a): 60 N·m (6.0 kg-m, 43.5 lb-ft)

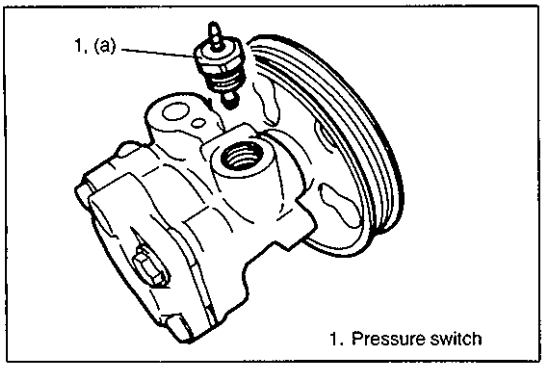

21) Apply power steering fluid to O-rings of pressure switch.
22) Install O-rings to pressure switch.
23) Install pressure switch to pump body.
Tightening Torque
(a): 28 N·m (2.8 kg-m, 20.0 lb-ft)

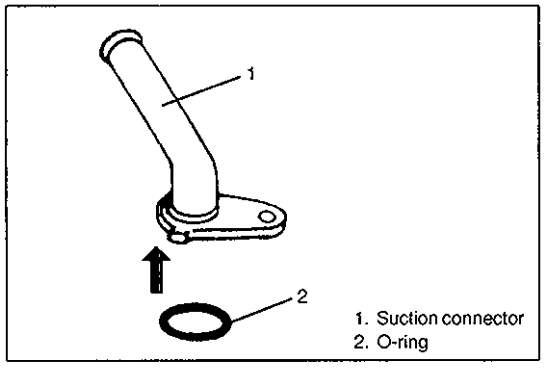

24) Apply power steering fluid to O-ring of suction connector.
25) Install O-ring to suction connector.

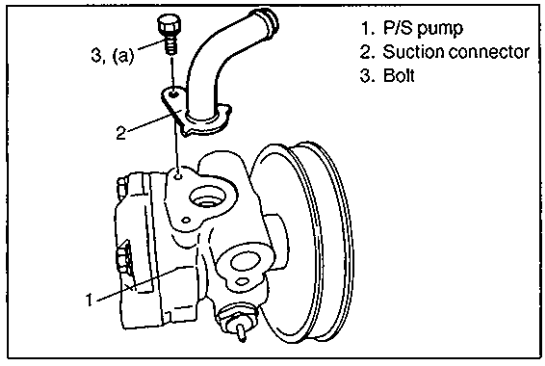

26) Install suction connector to pump body as shown in figure. Tighten suction connector bolts to specified torque.
Tightening Torque
(a): 12 N·m (1.2 kg-m, 8.5 lb-ft)

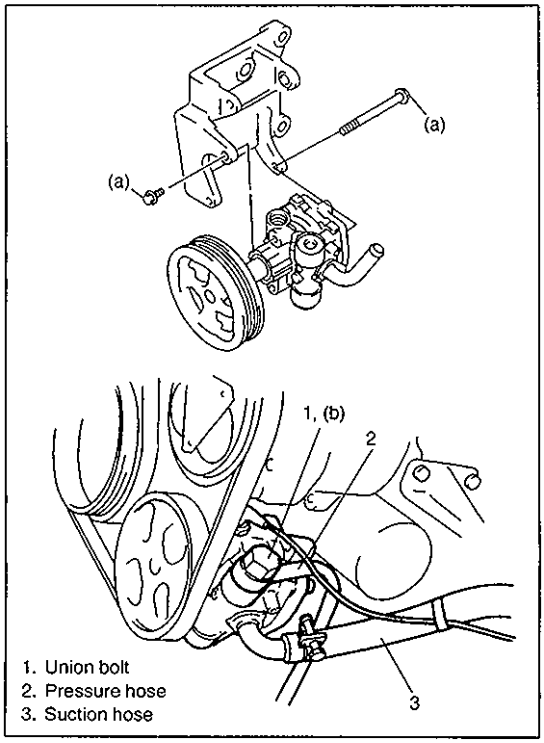

INSTALLATION

- Install components in reverse order of removal procedure.

CAUTION:
After installation, fill A/T fluid (an equivalent to DEXRON®-II, DEXRON®-IIE or DEXRON®-III) and be sure to bleed air. (Refer to item AIR BLEEDING.)

- Tighten each bolt as specified below.

Tightening Torque
(a): 25 N·m (2.5 kg-m, 18.5 lb-ft)
(b): 60 N·m (6.0 kg-m, 43.5 lb-ft)

- Adjust P/S belt, refer to POWER STEERING BELT INSPECTION in this section.
- Connect pressure switch terminal.

POWER STEERING (P/S) GEAR BOX

REMOVAL

1) Take out fluid in oil tank with syringe or such.
2) Turn steering wheel fully counterclockwise and loosen sector shaft nut of P/S gear box.
3) Return steering wheel to straightforward state and remove pitman arm from P/S gear box by using puller.

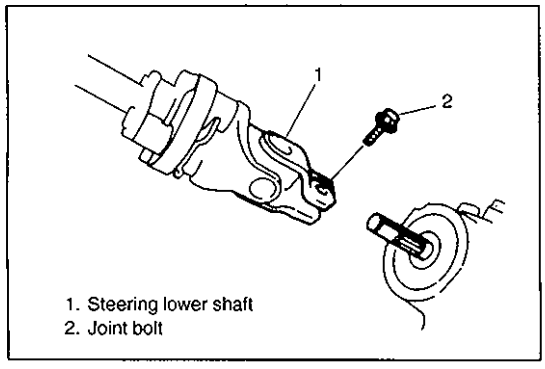

1. Steering lower shaft
2. Joint bolt

4) Remove radiator (for left-steering vehicle), refer to RADIATOR REMOVAL in Section 6B.
5) Remove radiator support member.
6) Disconnect suction hose and return hose from P/S oil tank, and remove P/S oil tank assy (for left-steering vehicle).
7) Remove steering lower shaft joint bolt.

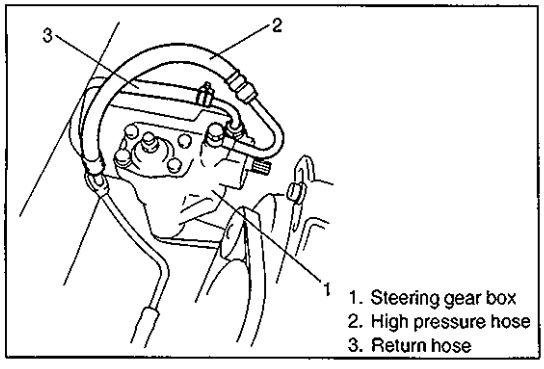

1. Steering gear box
2. High pressure hose
3. Return hose

8) Disconnect high pressure hose and return hose from gear box.

NOTE:
Plug up the section where hose disconnection.

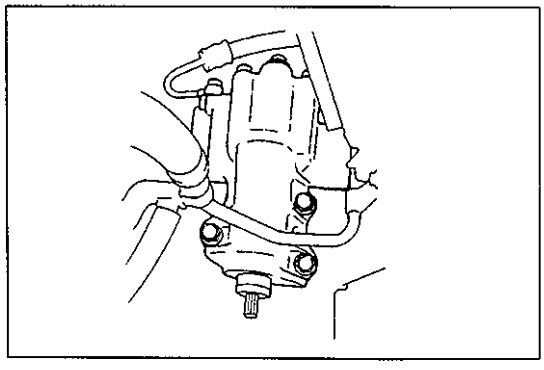

9) Remove gear box assy from vehicle.

CAUTION:
Never turn gear box input shaft. Otherwise, air goes into gear box, which needs air bleeding for gear box.

NOTE:
Don't disassemble P/S gear box.

For adjustment of worm shaft starting torque, refer to item "ADJUSTMENT OF WORM SHAFT STARTING TORQUE" of SECTION 3B.

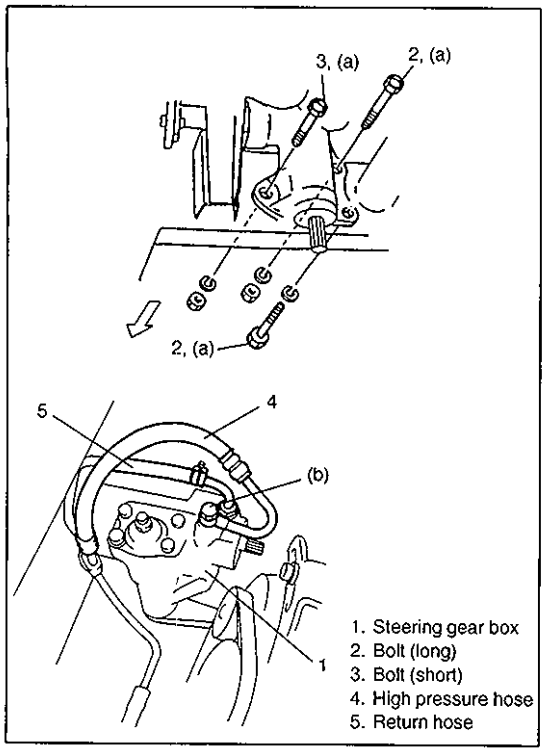

INSTALLATION

Reverse removal procedure to install P/S gear box noting following points.

- Tightening torque specification.

Tightening Torque
(a): 80 N·m (8.0 kg-m, 58.0 lb-ft)
(b): 35 N·m (3.5 kg-m, 25.5 lb-ft)

- Before servicing, set steering wheel and wheel/tire at straight position.

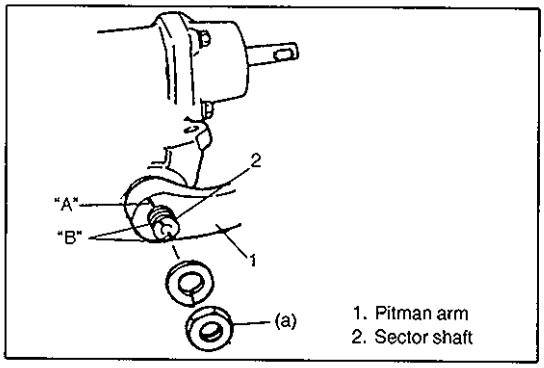

- Install pitman arm to sector shaft of P/S gear box with match marks "A" and "B" aligned as shown in figure and torque to specification.

Tightening Torque
(a): 135 N·m (13.5 kg-m, 98.0 lb-ft)

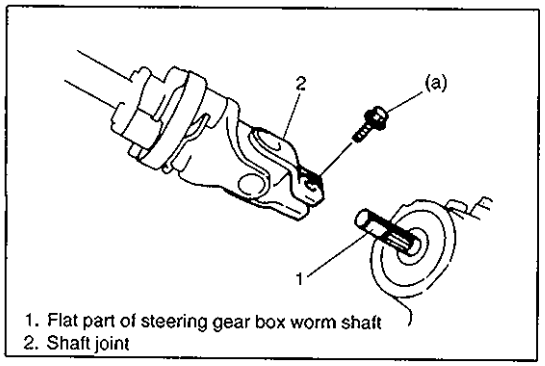

- Install lower shaft by the following steps.

1) Align flat part of steering gear box worm shaft with bolt hole in lower joint as shown. Then insert lower joint onto worm shaft.
2) Be sure that front wheels and steering wheel are in straightforward state and insert upper joint onto steering shaft.
3) Torque lower shaft joint bolt to specification.

Tightening Torque
(a): 25 N·m (2.5 kg-m, 18.0 lb-ft)

- Fill engine coolant to radiator.
- Bleed air in P/S circuit. For the procedure, refer to item "AIR BLEEDING".

TIGHTENING TORQUE SPECIFICATIONS

Fastening Parts	Tightening Torque		
	N·m	kg-m	lb-ft
Tension pulley bolt	50	5.0	36.5
Oil pump mount bolt	25	2.5	18.5
Oil pump high pressure union bolt	60	6.0	43.5
Oil pump cover bolts	28	2.8	20.0
Pressure switch	28	2.8	20.0
Suction connector bolt	12	1.2	8.5
Gear box mounting nuts and bolt	80	8.0	58.0
Gear box high pressure union bolt	35	3.5	25.5
Pitman arm nut	135	13.5	98.0
Steering shaft joint bolt	25	2.5	18.5

REQUIRED SERVICE MATERIAL

MATERIAL	RECOMMENDED SUZUKI PRODUCT	USE
Power steering fluid	An equivalent of DEXRON®-II, DEXRON®-IIE or DEXRON®-III.	• To fill oil tank • Parts lubrication when installing
Lithium grease	SUPER GREASE (A) (99000-25010)	• Oil seal lip of P/S pump pulley shaft

SPECIAL TOOLS

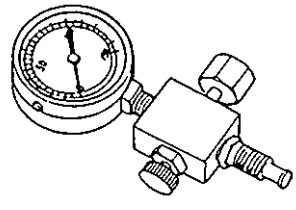

09915-77410
Oil pressure gauge

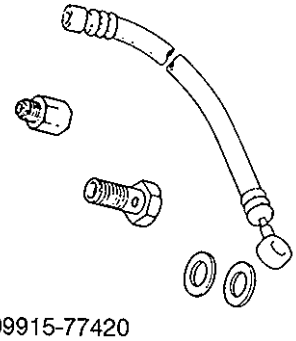

09915-77420
Oil pressure gauge attachment & hose set

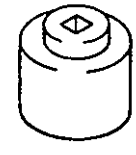

09944-18211
Torque check socket

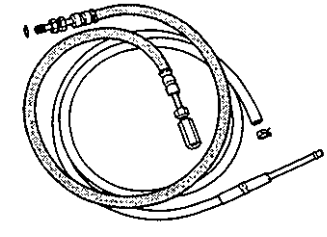

09945-35010
Air bleeding hose set

SECTION 3C

STEERING WHEEL AND COLUMN

WARNING:
For vehicles equipped with Supplemental Restraint (Air Bag) System:

- **Service on and around the air bag system components or wiring must be performed only by an authorized SUZUKI dealer. Please observe all WARNINGS and "Service Precautions" under "On-Vehicle Service" in air bag system section before performing service on or around the air bag system components or wiring. Failure to follow WARNINGS could result in unintentional activation of the system or could render the system inoperative. Either of these two conditions may result in severe injury.**
- **The procedures in this section must be followed in the order listed to temporarily disable the air bag system and prevent false diagnostic codes from setting. Failure to follow procedures could result in possible air bag system activation, personal injury or otherwise unneeded air bag system repairs.**

CAUTION:
When fasteners are removed, always reinstall them at the same location from which they were removed. If a fastener needs to be replaced, use the correct part number fastener for that application. If the correct part number fastener is not available, a fastener of equal size and strength (or stronger) may be used. Fasteners that are not reused, and those requiring thread-locking compound, will be called out. The correct torque value must be used when installing fasteners that require it. If the above procedures are not followed, parts or system damage could result.

CONTENTS

GENERAL DESCRIPTION 3C- 2
DIAGNOSIS 3C- 3
Inspection and Repair Required After Accident 3C- 3
ON-VEHICLE SERVICE 3C- 3
Service Precautions (For Vehicle with Air Bag System) 3C- 3
Servicing and Diagnosis 3C- 3
Disabling air bag system 3C- 3
Enabling air bag system 3C- 3
Handling and Storage 3C- 3
Disposal 3C- 3
Driver Air Bag (Inflator) Module (For Vehicle with Air Bag System) 3C- 4
Steering Wheel 3C- 5
Centering contact coil (for vehicle with air bag system) 3C- 8
Combination Switch (For Vehicle without Air Bag System)/Contact Coil and Combination Switch Assembly (For Vehicle with Air Bag System) 3C- 8
Steering Column Assembly 3C-11
Steering Lock Assembly (Ignition Switch) .. 3C-15
Steering Lower Shaft 3C-16
CHECKING STEERING COLUMN FOR ACCIDENT DAMAGE 3C-17
TIGHTENING TORQUE SPECIFICATIONS .. 3C-18
REQUIRED SERVICE MATERIAL 3C-18
SPECIAL TOOL 3C-19

GENERAL DESCRIPTION

This double tube type steering column has following three important features in addition to the steering function:

- The column is energy absorbing, designed to compress in a front-end collision.
- The ignition switch and lock are mounted conveniently on this column.
- With the column mounted lock, the ignition and steering operations can be locked to inhibit theft of the vehicle.

To insure the energy absorbing action, it is important that only the specified screws, bolts, and nuts be used as designated and that they are tightened to the specified torque.

When the column assembly is removed from the vehicle, special care must be taken in handling it. Use of a steering wheel puller other than the one recommended in this manual or a sharp blow on the end of the steering shaft, leaning on the assembly, or dropping the assembly could shear the plastic shear pins which maintain column length and position.

The driver air bag (inflator) module is one of the supplemental restraint (air bag) system components and is mounted to the center of the steering wheel. During certain frontal crashes, the air bag system supplements the restraint of the driver's and passenger's seat belts by deploying the air bags.
The air bag (inflator) module should be handled with care to prevent accidental deployment. When servicing, be sure to observe all WARNINGS and CAUTIONS in this section and "Service Precautions" under "On-Vehicle Service" in this SECTION 10B.

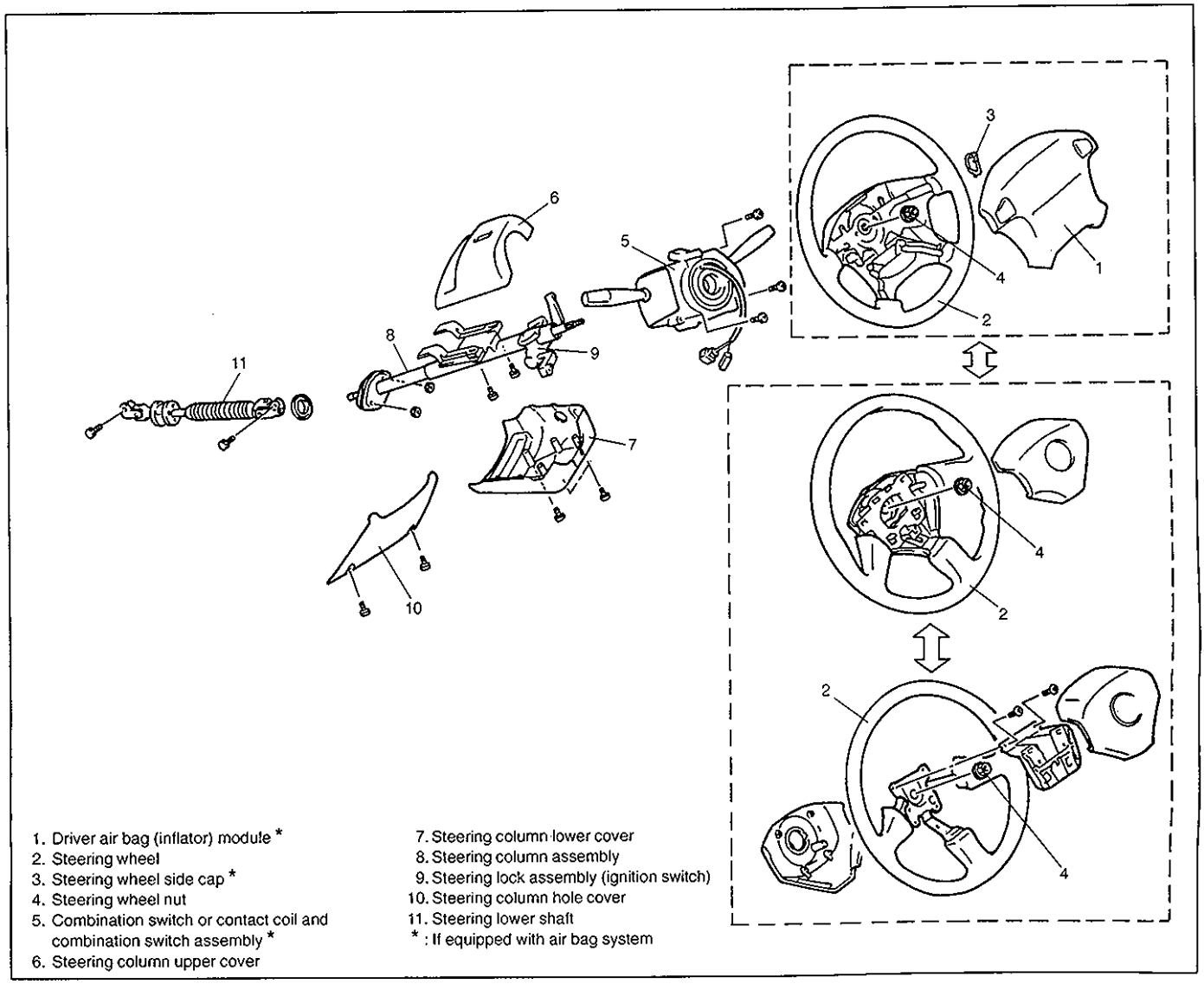

1. Driver air bag (inflator) module *
2. Steering wheel
3. Steering wheel side cap *
4. Steering wheel nut
5. Combination switch or contact coil and combination switch assembly *
6. Steering column upper cover
7. Steering column lower cover
8. Steering column assembly
9. Steering lock assembly (ignition switch)
10. Steering column hole cover
11. Steering lower shaft

* : If equipped with air bag system

DIAGNOSIS

For maintenance service of the steering wheel and column, refer to SECTION 0B.
For diagnosis of the steering wheel and column, refer to SECTION 3.
For diagnosis of the air bag system, refer to SECTION 10B.

INSPECTION AND REPAIR REQUIRED AFTER ACCIDENT

[For vehicle without air bag system]
After an accident, be sure to perform checks, inspections and repairs described under "Checking Steering Column for Accident Damage" in this section.
[For vehicle with air bag system]
After an accident, whether the air bag has been deployed or not, be sure to perform checks, inspections and repairs described under "Checking Steering Column for Accident Damage" in this section as well as "Repairs and Inspections Required after Accident" under "Diagnosis" in SECTION 10B.

ON-VEHICLE SERVICE

SERVICE PRECAUTIONS (FOR VEHICLE WITH AIR BAG SYSTEM)

For service precautions, refer to "Service Precautions" under "On-Vehicle Service" in SECTION 10B.

DIAGNOSIS AND SERVICING

For diagnosis and servicing, refer to "Diagnosis And Servicing" under "Service Precautions" in SECTION 10B.

DISABLING AIR BAG SYSTEM

For disabling air bag system, refer to "Disabling Air Bag System" under "Service Precautions" in SECTION 10B.

ENABLING AIR BAG SYSTEM

For enabling air bag system, refer to "Enabling Air Bag System" under "Service Precautions" in SECTION 10B.

HANDLING AND STORAGE

For handling and storage, refer to "Handling And Storage" under "Service Precautions" in SECTION 10B.

DISPOSAL

For disposal, refer to "Disposal" under "Service Precautions" in SECTION 10B.

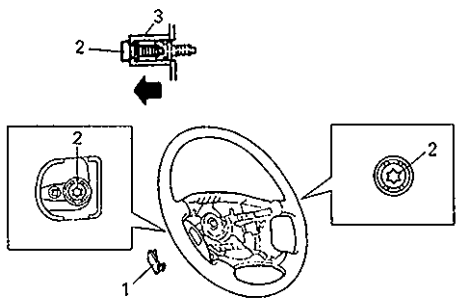

1. Steering wheel side cap
2. Mounting bolt
3. Bolt clamp

DRIVER AIR BAG (INFLATOR) MODULE (FOR VEHICLE WITH AIR BAG SYSTEM)

WARNING:
When handling an air bag (inflator) module, be sure to read "Service Precautions" given earlier in this section and observe each instruction. Failure to follow them could cause a damage to the air bag (inflator) module or result in personal injury.

REMOVAL

1) Disconnect negative battery cable at battery terminal.
2) Disable air bag system. Refer to "Disabling Air Bag System" under "Service Precautions" in SECTION 10B.
3) Remove steering wheel side cap of left side.
4) Loosen 2 bolts mounting driver air bag (inflator) module till it turns freely, pull them out and fix them to bolt clamps.

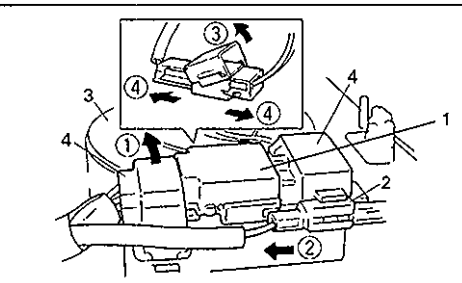

1. Driver air bag (inflator) module connector
2. Horn connector
3. Driver air bag (inflator) module
4. Connector clamp

5) Remove driver air bag (inflator) module from steering wheel.
6) Disconnect yellow connector of driver air bag (inflator) module and horn connector in order (① ~ ④) shown in the figure.

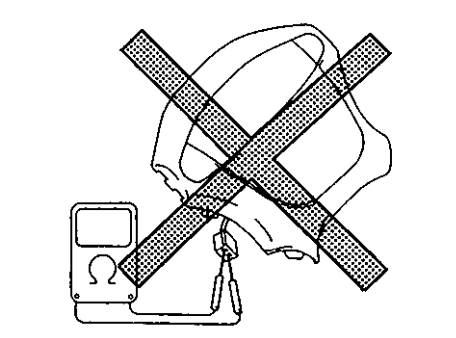

INSPECTION

WARNING:
Never disassemble driver air bag (inflator) module or measure its resistance. Otherwise, personal injury may result.

CAUTION:
If air bag (inflator) module was dropped from a height of 90 cm (3 ft) or more, it should be replaced.

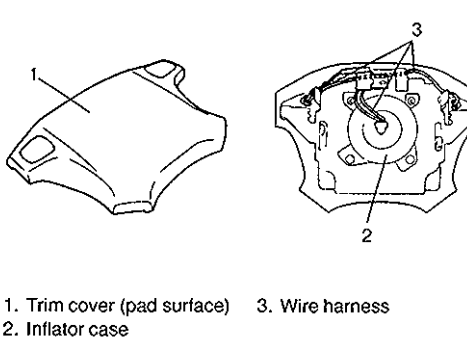

1. Trim cover (pad surface)
2. Inflator case
3. Wire harness

Check air bag (inflator) module visually and if any of the following is found, replace it with a new one.

- Air bag being deployed
- Trim cover (pad surface) being cracked
- Wire harness or connector being damaged
- Air bag (inflator) module being damaged or having been exposed to strong impact (dropped)

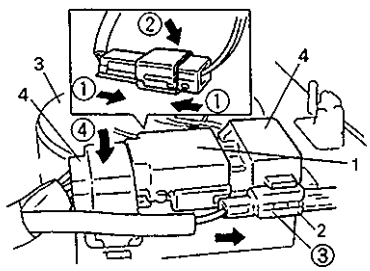

INSTALLATION

1) Check that horn wire is connected to horn terminal securely.
2) Connect yellow connector of driver air bag (inflator) module and horn connector in order (① ~ ④) shown in the figure securely.

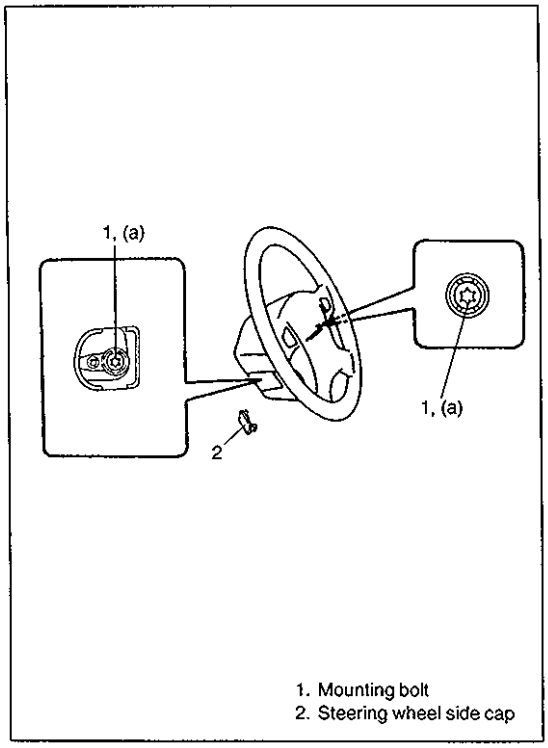

3) Install driver air bag (inflator) module to steering wheel, taking care so that no part of wire harness is caught between them.
4) Make sure that clearance between module and steering wheel is uniform all the way.
5) Tighten driver air bag (inflator) module mounting bolts to specified torque.

Tightening Torque
(a): 9 N·m (0.9 kg-m, 6.5 lb-ft)

6) Install steering wheel side cap.
7) Connect negative battery cable.
8) Enable air bag system. Refer to "Enabling Air Bag System" under "Service Precautions" in SECTION 10B.

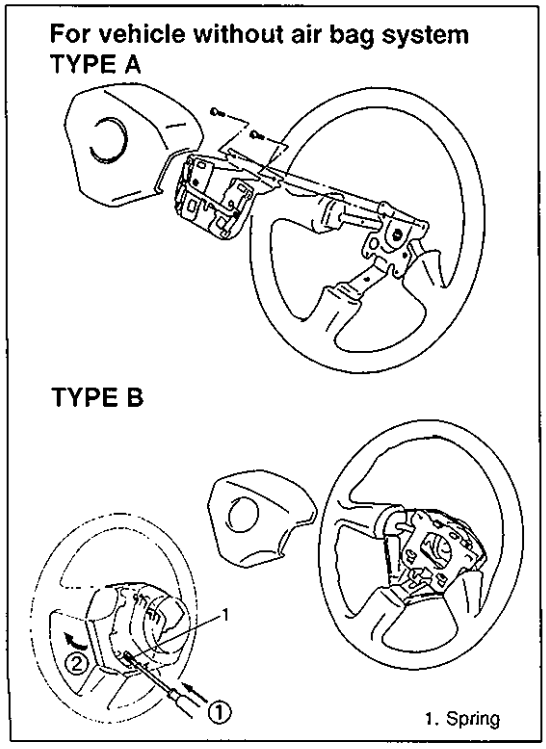

STEERING WHEEL

CAUTION:
For vehicle with air bag system
Removal of the steering wheel allows the contact coil to turn freely but do not turn the contact coil (on the combination switch) more than allowable number of turns (about two and a half turns from the center position clockwise or counterclockwise respectively), or coil will break.

REMOVAL

1) [For vehicle without air bag system]
   i) Disconnect negative battery cable at battery terminal.
   For TYPE A
   ii) Remove steering wheel pad.
   iii) Disconnect horn connector.
   For TYPE B
   ii) As shown in the figure, while pushing the set spring with a screwdriver or the like inserted in the hole of the steering wheel, pull the lower part of the pad forward and remove the steering wheel pad.

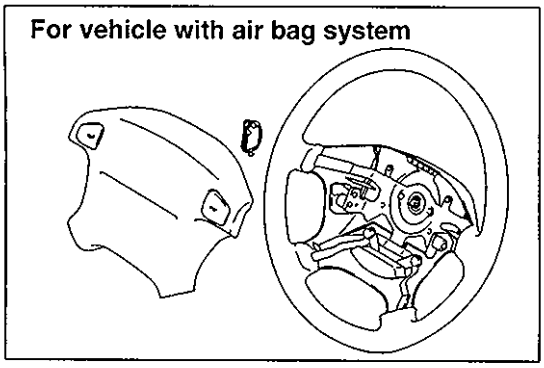

[For vehicle with air bag system]
Remove driver air bag (inflator) module from steering wheel referring to "Driver Air Bag (Inflator) Module" earlier in this section.

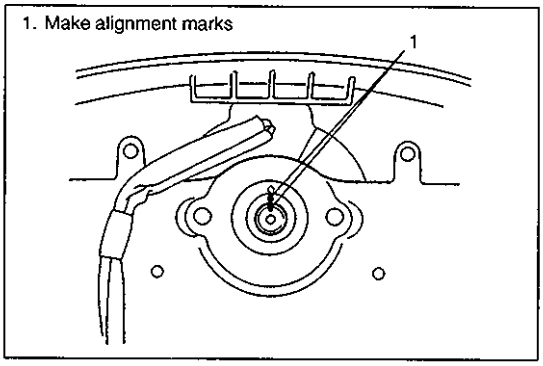

2) Remove steering shaft nut.
3) Make alignment marks on steering wheel and shaft for a guide during reinstallation.

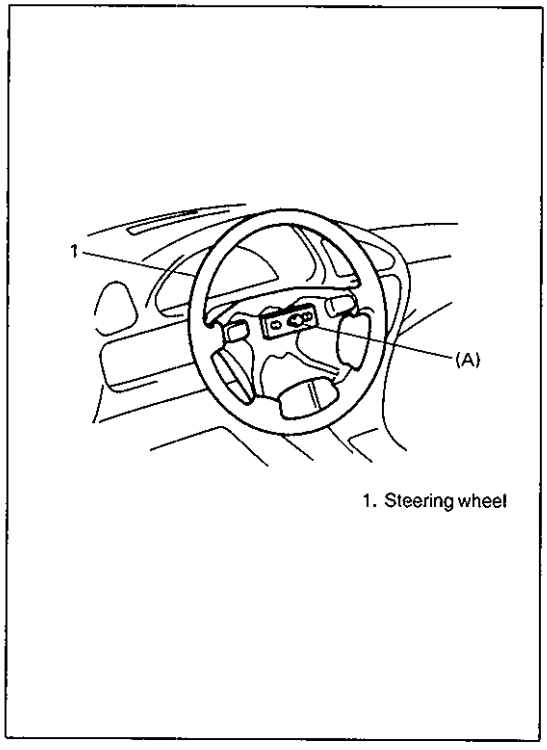

4) Remove steering wheel with special tool.

Special Tool
(A): 09944-36011

CAUTION:
Do not hammer the end of the shaft. Hammering it will loosen the plastic shear pins which maintain the column length and impair the collapsible design of the column.

For vehicle without air bag system

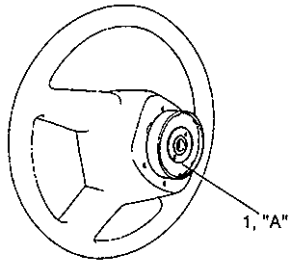

For vehicle with air bag system

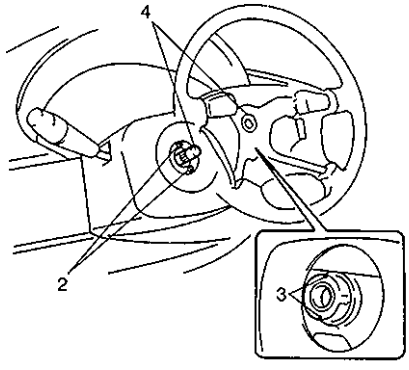

1. Contact plate
2. Lugs
3. Grooves
4. Alignment marks

For TYPE B without air bag system

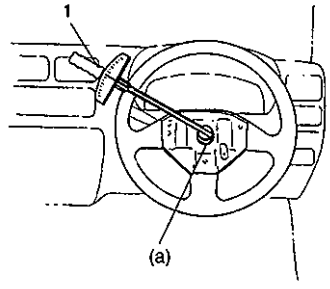

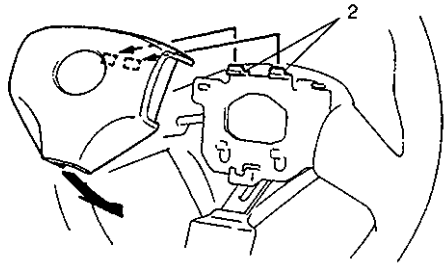

1. Torque wrench
2. Hook

INSTALLATION

1) Check that vehicle's front tires are at straight-ahead position and If equipped with air bag system, contact coil is centered. Refer to "Centering Contact Coil" later in this section.

> **CAUTION:**
> **For vehicle with air bag system**
> **These two conditions are prerequisite for installation of steering wheel. If steering wheel has been installed without these conditions, contact coil will break when steering wheel is turned.**

2) [For vehicle without air bag system]
   i) Apply grease to contact plate
      "A" : Grease 99000-25290
   ii) Install steering wheel onto shaft, aligning them by match marks.
   [For vehicle with air bag system]
   Install steering wheel to steering shaft with 2 lugs on contact coil fitted in two grooves in the back of steering wheel and also aligning marks on steering wheel and steering shaft.

3) Tighten steering shaft nut to specified torque.
   Tightening Torque
   (a): 33 N·m (3.3 kg-m, 23.5 lb-ft)

   NOTE:
   After installing the steering wheel, turn the steering wheel about 1 full rotation so that the cancel cam pin fits into the pin hole in the steering wheel and then check the turn signal lever for proper function.

4) [For vehicle without air bag system]
   For TYPE A
   Install steering wheel pad.
   For TYPE B
   To install the pad, hook the upper part of the pad to the pawl of the steering wheel and push in the lower part of the pad until it fits to the set spring securely.
   [For vehicle with air bag system]
   Install driver air bag (inflator) module to steering wheel. Refer to "Driver Air Bag (Inflator) Module" earlier in this section.

CENTERING CONTACT COIL (FOR VEHICLE WITH AIR BAG SYSTEM)

1) Check that vehicle's wheels (front tires) are set at straight-ahead position.
2) Check that ignition switch is at "LOCK" position.

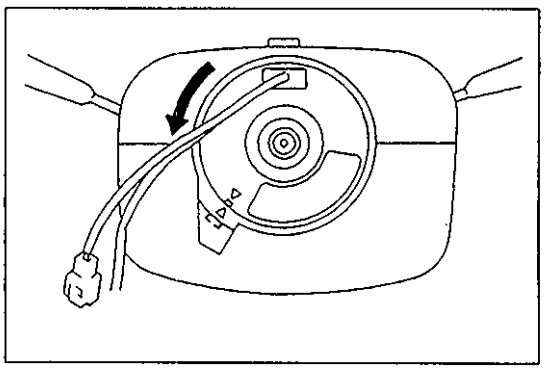

3) Turn contact coil counterclockwise slowly with a light force till contact coil will not turn any further.

NOTE:
Contact coil can turn about 5 turns at maximum, that is, if it is at the center position, can turn about two and a half turns both clockwise and counterclockwise.

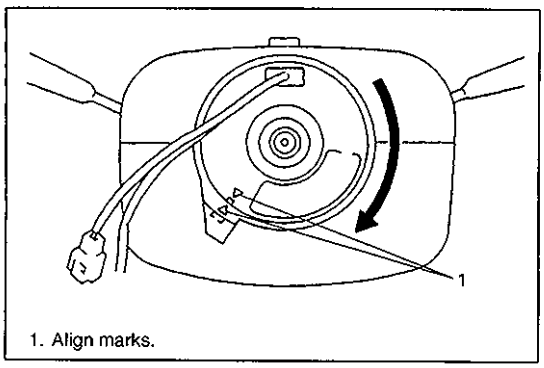

1. Align marks.

4) From the position where contact coil became unable to turn any further (it stopped), turn it back clockwise about two and a half rotations and align center mark with alignment mark.

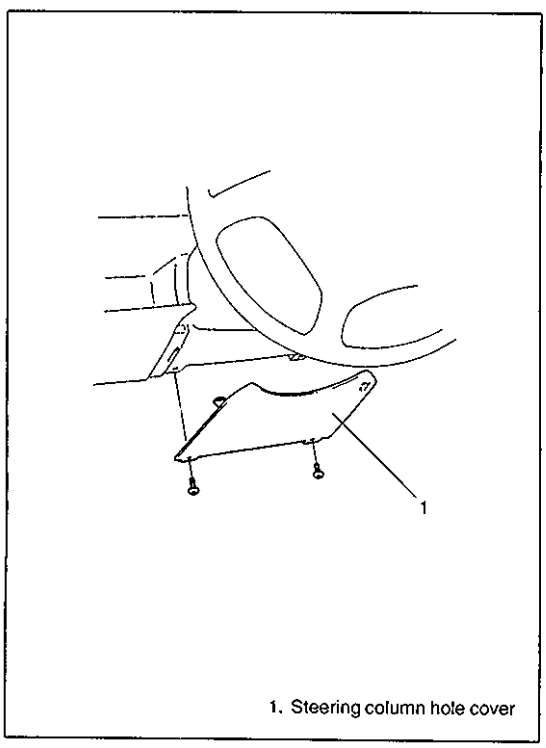

1. Steering column hole cover

COMBINATION SWITCH (FOR VEHICLE WITHOUT AIR BAG SYSTEM)/CONTACT COIL AND COMBINATION SWITCH ASSEMBLY (FOR VEHICLE WITH AIR BAG SYSTEM)

CAUTION:
For vehicle with air bag system
Do not turn contact coil (on combination switch) more than allowable number of turns (about two and a half turns from the center position clockwise or counterclockwise respectively), or coil will break.

REMOVAL

1) Remove steering wheel from steering column. Refer to "Steering Wheel" earlier in this section.
2) Remove steering column hole cover.

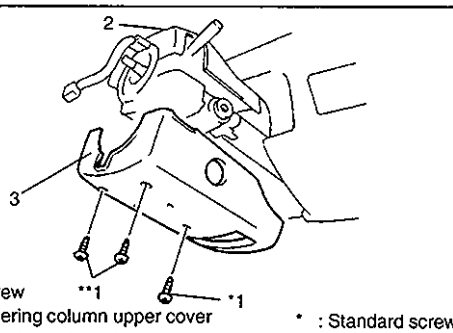

1. Screw
2. Steering column upper cover
3. Steering column lower cover

* : Standard screw
** : Tapping screw

3) Remove steering column cover screws (3 pcs).
4) Loosen steering column mounting bolts and nuts (Refer to "Steering Column" later in this section).
5 Separate upper cover and lower cover, then remove them.
6) Disconnect all connectors for combination switch/contact coil and combination switch assembly.

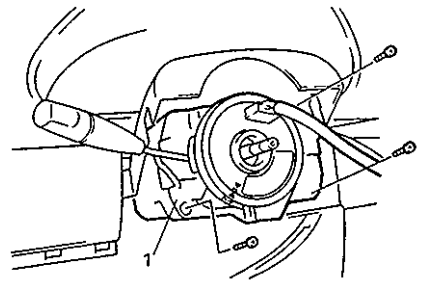

1. Contact coil and combination switch assembly

7) Remove combination switch/contact coil and combination switch assembly from steering column.

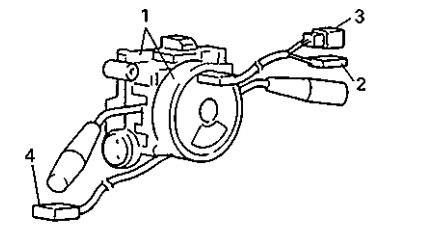

1. Contact coil and combination switch assembly
2. To horn
3. Connector to driver air bag (inflator) module
4. Connector to air bag wire harness

INSPECTION

[For vehicle with air bag system]
Check contact coil and combination switch wire harness for any signs of scorching, melting or other damage. If it is damaged, replace.

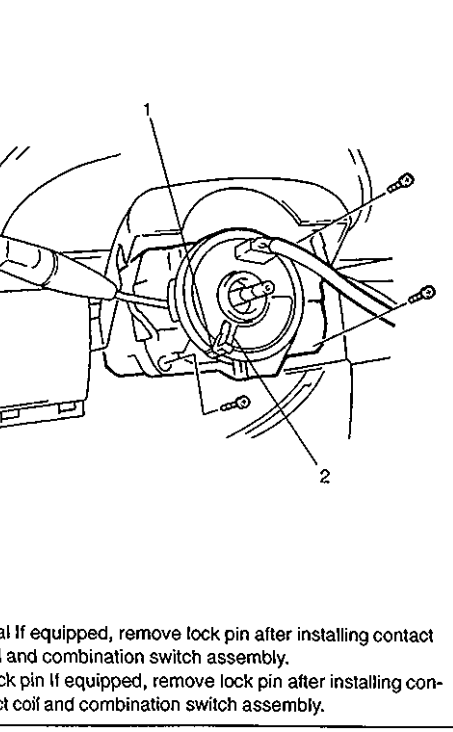

1. Seal If equipped, remove lock pin after installing contact coil and combination switch assembly.
2. Lock pin If equipped, remove lock pin after installing contact coil and combination switch assembly.

INSTALLATION

1) Check to make sure that vehicle's front tires are set at straight-ahead position and then ignition switch is at "LOCK" position.
2) Install combination switch/contact coil and combination switch assembly to steering column.

NOTE:
For vehicle with air bag system
New contact coil and combination switch assembly is supplied with contact coil set and held at its center position with a lock pin and seal. Remove this lock pin after installing contact coil and combination switch assembly to steering column.

3) Connect all connectors that have been removed in "Removal".

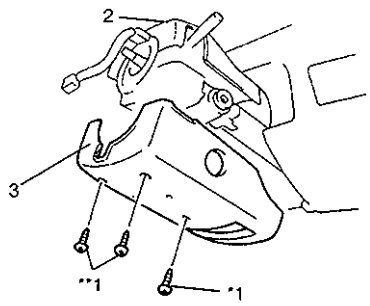

1. Screw
2. Steering column upper cover
3. Steering column lower cover

* : Standard screw
** : Tapping screw

4) Install steering column upper and lower cover, and then tighten steering column cover screws.

CAUTION:
When installing lower cover and upper cover, be careful so that combination switch/contact coil and combination switch lead wirer is not caught between covers.

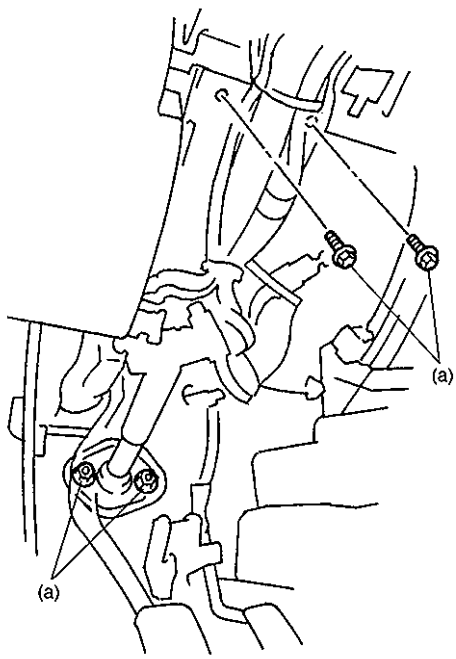

5) Tighten steering column mounting nuts and bolts by hand and then tighten mounting nuts first and then mounting bolts to specified torque.

Tightening Torque
(a): 14 N·m (1.4 kg-m, 10.5 lb-ft)

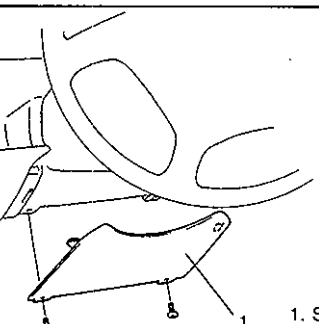

1. Steering column hole cover

6) Install steering column hole cover.
7) Install steering wheel to steering column. Refer to "Steering Wheel" earlier in this section.

STEERING COLUMN ASSEMBLY

CAUTION:
Once the steering column is removed from the vehicle, the column is extremely susceptible to damage.
- **Dropping the column assembly on its end could collapse the steering shaft or loosen the plastic shear pins which maintain column length.**
- **Leaning on the column assembly could cause it to bend or deform.**

Any of the above damage could impair the column's collapsible design.

NOTE:
When servicing steering column or any column-mounted component, remove steering wheel. But when removing steering column simply to gain access to instrument panel components, leave steering wheel installed on steering column.

REMOVAL

WARNING:
For vehicle with air bag system
Never rest a steering column assembly on the steering wheel with the air bag (inflator) module face down and column vertical. Otherwise, personal injury may result.

1) Disconnect negative battery cable at battery terminal.
   For vehicle with air bag system.
2) Disable air bag system. Refer to "Disabling Air Bag System" under "Service Precautions" earlier in SECTION 10B.
3) Remove steering wheel and combination switch assembly, if necessary. Refer to "Steering Wheel" and "Combination switch/ Contact Coil and Combination Switch Assembly" earlier in this section.
   Perform the following procedure if not removing steering wheel and/or combination switch assembly.
   i) Turn steering wheel so that vehicle's front tires are at straightahead position.
   ii) Turn ignition switch to "LOCK" position and remove key.

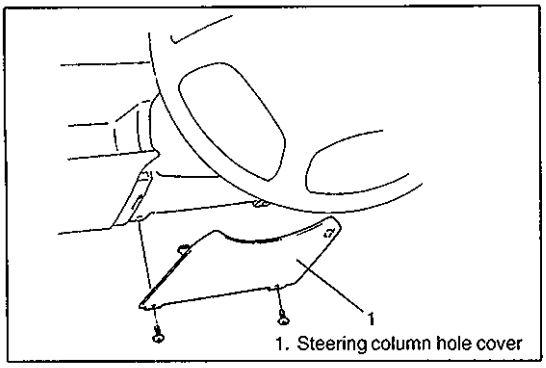

4) Remove steering column hole cover.
5) Disconnect all connectors of the following parts.
   - Combination switch/contact coil and combination switch assembly.
   - Ignition switch.
   - Immobilizer control system parts (if equipped).

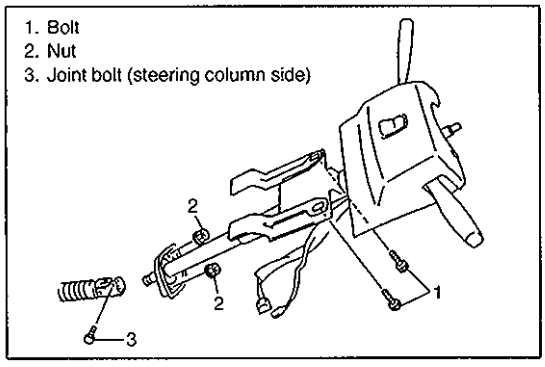

6) Remove joint bolt (steering column side) and loosen joint bolt (steering gear box side).
7) Remove steering column mounting nuts and bolts.

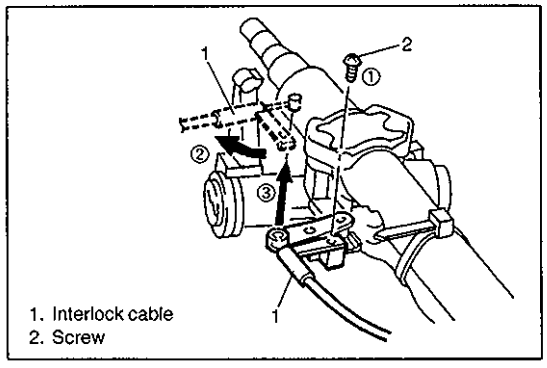

8) If equipped with shift (key) interlock cable, remove shift (key) interlock cable screw and then disconnect its cable from ignition switch in order (① ~ ②) shown in the figure.

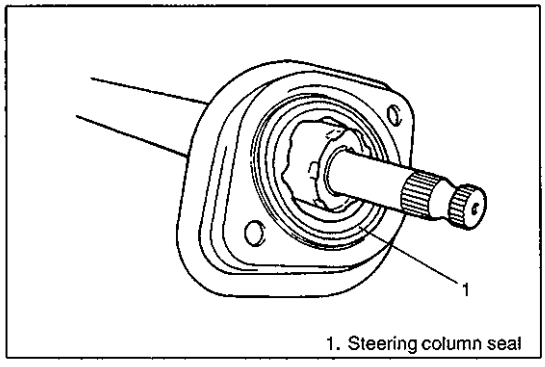

9) Remove steering column from vehicle.
10) Remove steering column seal from steering column lower bracket.

CAUTION:
Don't separate double tube type steering column assembly into steering column and shaft. If column or shaft is defective, replace as and assembly.

INSPECTION

NOTE:
Vehicles involved in accidents resulting in body damage, where steering column has been impacted (or air bag deployed), may have a damaged or misaligned steering column.

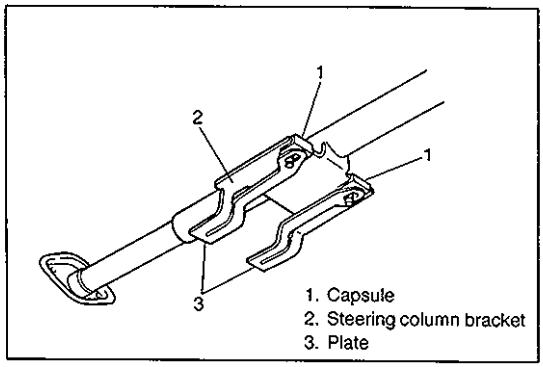

1. Capsule
2. Steering column bracket
3. Plate

CHECKING PROCEDURE

1) Check that two capsules are attached to steering column bracket securely. Check clearance between capsules and steering column bracket. Clearance should be 0.0 mm (0.0 in.) on both sides.
   If found loose or clearance, replace steering column assembly.
2) Check two plates for any damages such as crack or breakage.
   If anything is found faulty, replace as steering column assembly.

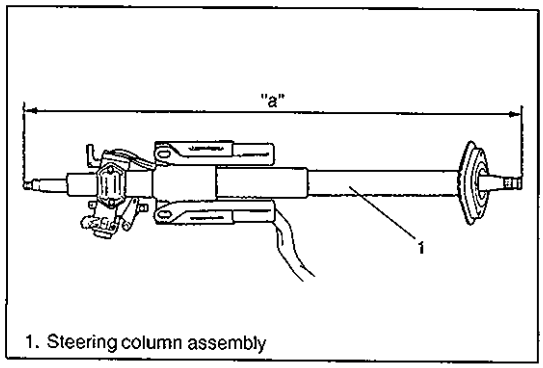

1. Steering column assembly

3) Take measurement "a" as shown.
   If it is shorter than specified length, replace column assembly with new one.

   Length "a": 733.2 – 734.8 mm (28.87 – 28.93 in.)

4) Check steering shaft joints and shaft for any damages such as crack, breakage, malfunction or excessive play.
   If anything is found faulty, replace as lower joint assembly or column assembly.
5) Check steering shaft for smooth rotation.
   If found defective, replace as column assembly.
6) Check steering shaft and column for bend, cracks or deformation.
   If found defective, replace.

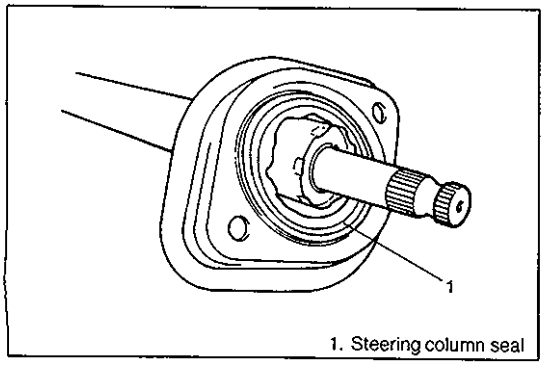

1. Steering column seal

7) Check steering column lower seal for breakage or deformation.
   If found defective, replace.

INSTALLATION

CAUTION:
After tightening steering column mounting bolts and nuts shaft joint bolts should be tightened.

1) Be sure that front wheels and steering wheel are in straight forward state.
2) If equipped, install shift (key) interlock cable to ignition switch.

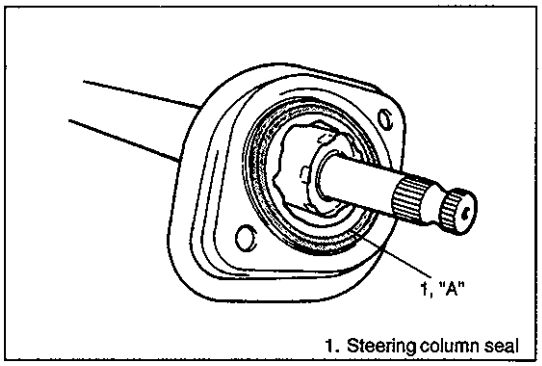

1. Steering column seal

3) Apply sealant to the steering column lower bracket (shaded section in the figure) and fit the steering column seal to the stepped part of the steering column lower bracket securely.

"A" : Sealant 99000-31090

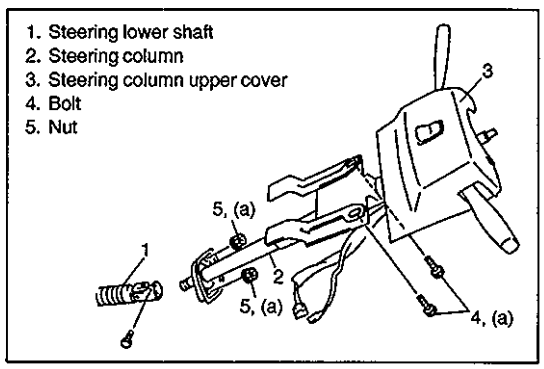

4) Insert steering lower shaft to steering shaft.
5) Put the steering column upper cover on top of the steering column, if necessary and then tighten steering column mounting nuts and bolts by hand.
6) Tighten mounting nuts first and then mounting bolts to specified torque.

Tightening Torque
(a): 14 N·m (1.4 kg-m, 10.5 lb-ft)

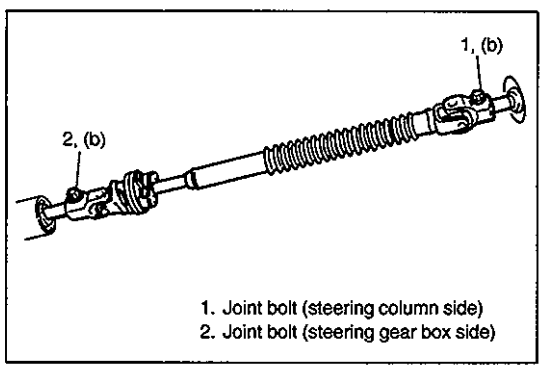

1. Joint bolt (steering column side)
2. Joint bolt (steering gear box side)

7) Tighten joint blot (steering column side) first and then joint bolt (steering gear box side) to specified torque.

Tightening Torque
(b): 25 N·m (2.5 kg-m, 18.0 lb-ft)

8) If combination switch is removed, install combination switch. Refer to "Combination Switch/Contact Coil and Combination Switch Assembly" earlier in this section.
9) Connect all connectors that have been removed in "Removal".

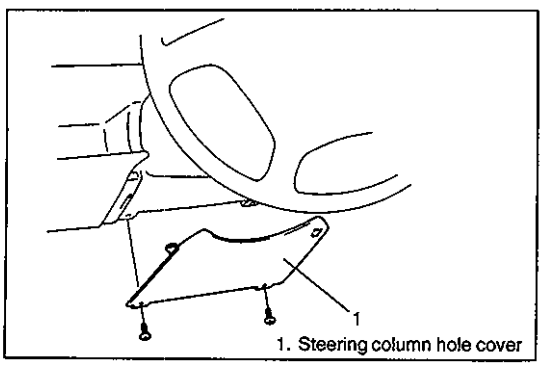

1. Steering column hole cover

10) Install steering column hole cover.
11) If steering wheel is removed, install steering wheel. Refer to "Steering Wheel" earlier in this section.
12) [For vehicle with air bag system]
Enable air bag system. Refer to"Enabling Air Bag System" under "Service Precautions" in SECTION 10B.
13) Connect negative battery cable.

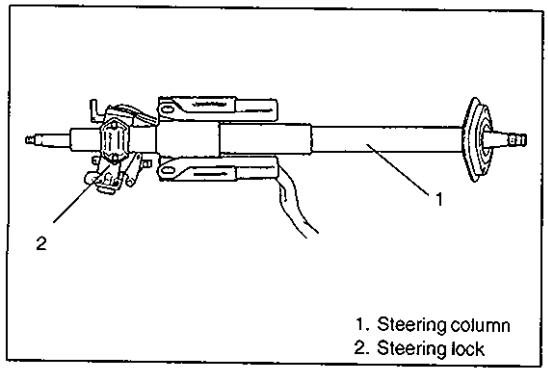

1. Steering column
2. Steering lock

STEERING LOCK ASSEMBLY (IGNITION SWITCH)

REMOVAL

1) Remove steering column. Refer to "Steering Column" earlier in this section.

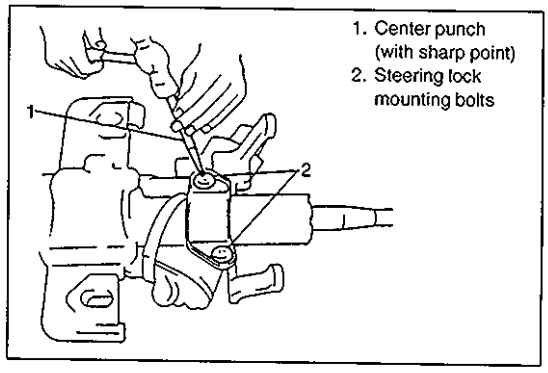

1. Center punch (with sharp point)
2. Steering lock mounting bolts

2) Using center punch as shown, loosen and remove steering lock mounting bolts.

NOTE:
Use care not to damage aluminum part of steering lock body with center punch.

3) Turn ignition key to "ACC" or "ON" position and remove steering lock assembly from steering column.

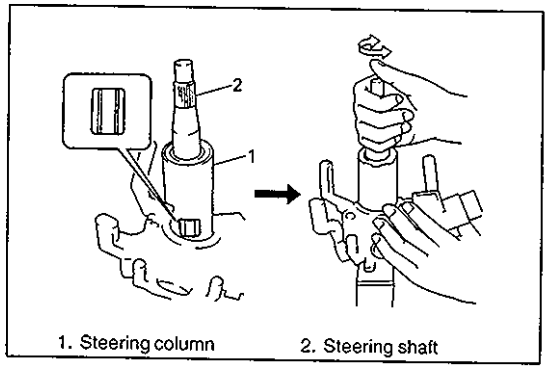

1. Steering column
2. Steering shaft

INSTALLATION

1) Position oblong hole of steering shaft in the center of hole in column.
2) Turn ignition key to "ACC" or "ON" position and install steering lock assembly onto column.
3) Now turn ignition key to "LOCK" position and pull it out.
4) Align hub on lock with oblong hole of steering shaft and rotate shaft to assure that steering shaft is locked.

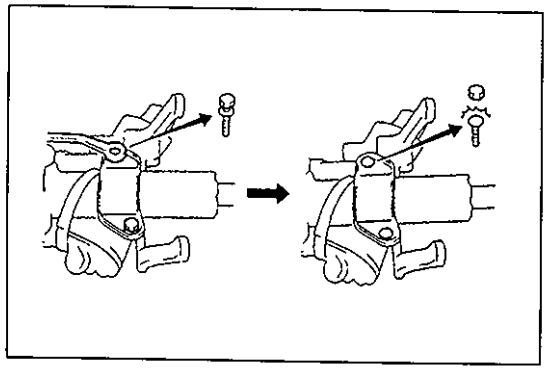

5) Tighten new bolts until head of each bolt is broken off.
6) Turn ignition key to "ACC" or "ON" position and check to be sure that steering shaft rotates smoothly. Also check for lock operation.

7) Install steering column. Refer to "Steering Column" earlier in this section.

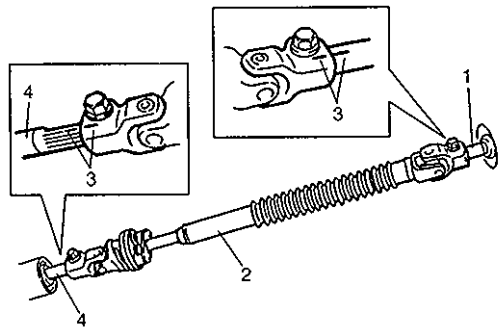

1. Steering column assembly
2. Steering lower shaft
3. Marks
4. Steering gear box shaft

STEERING LOWER SHAFT

CAUTION:
For vehicle with air bag system
Never turn steering wheel while steering shaft lower joint is removed.
Should it have been turned and contact coil (on combination switch) have got out of its centered position, it needs to be centered again. Also, turning steering wheel more than about two and a half turns will break contact coil.

REMOVAL

1) Turn steering wheel so that vehicle's front tires are at straight-ahead position.
2) Turn ignition switch to "LOCK" position and remove key.
3) Make alignment marks on lower shaft and shaft (column side) and lower shaft and gear box shaft (gear box side) for a guide during reinstallation.
4) Remove lower shaft joint bolts.
5) Remove steering lower shaft.

INSTALLATION

1) Be sure that front wheels and steering wheel are in straight forward state.
2) Align flat part "A" of steering gear box shaft with bolt hole "B" of lower shaft joint as shown. Then insert lower shaft joint into steering gear box shaft.
3) Tighten shaft joint bolt (column side) to specified torque first and then shaft joint bolt (gear box shaft side) to specified torque.

Tightening Torque
(a): 25 N·m (2.5 kg-m, 18.0 lb-ft)

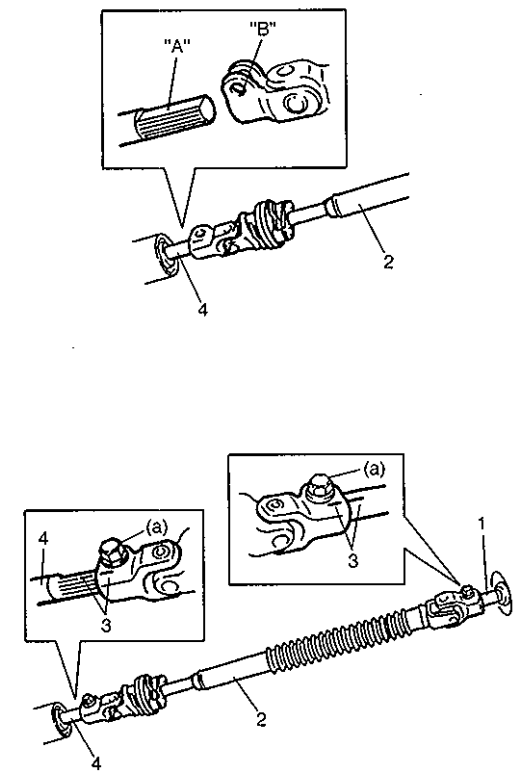

1. Steering column assembly
2. Steering lower shaft
3. Marks
4. Steering gear box shaft

CHECKING STEERING COLUMN FOR ACCIDENT DAMAGE

NOTE:
Vehicles involved in accidents resulting in body damage, where steering column has been impacted (or air bag deployed) may have a damaged or misaligned steering column.

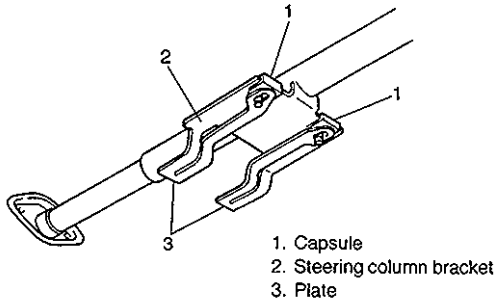

1. Capsule
2. Steering column bracket
3. Plate

CHECKING PROCEDURE

1) Check that two capsules are attached to steering column bracket securely. Check clearance between capsules and steering column bracket. Clearance should be 0.0 mm (0.0 in.) on both sides.
   If found loose or clearance, replace steering column assembly.
2) Check two plates for any damages such as crack or breakage.
   If anything is found faulty, replace as steering column assembly.

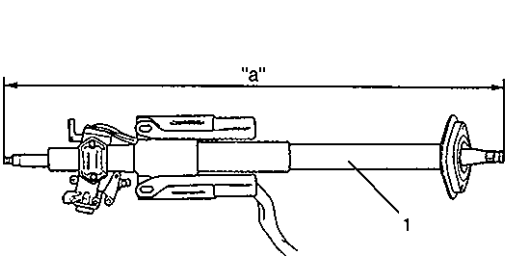

1. Steering column assembly

3) Take measurement "a" as shown.
   If it is shorter than specified length, replace column assembly with new one.

   Length "a": 733.2 – 734.8 mm (28.87 – 28.93 in.)

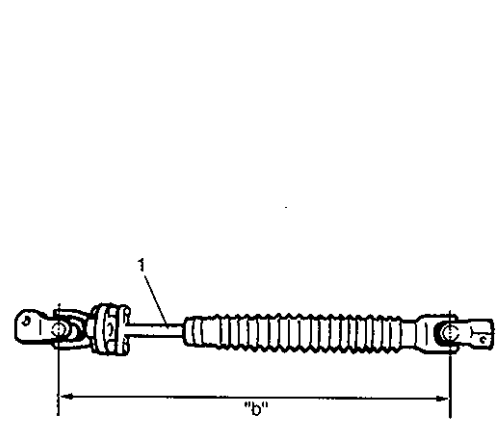

1. Steering lower shaft

4) Check if steering lower shaft is with in specified length.
   If it is out of specified length, replace it with new one.

   Length "b": 478.3 – 480.3 mm (18.83 – 18.91 in.)
   (For LH steering vehicle without P/S system)
   438.3 – 440.3 mm (17.26 – 17.33 in.)
   (For RH steering vehicle without P/S system)
   393.6 – 395.6 mm (15.50 – 15.57 in.)
   (For LH steering vehicle with P/S system)
   434.2 – 436.2 mm (17.09 – 17.17 in.)
   (For RH steering vehicle with P/S system)

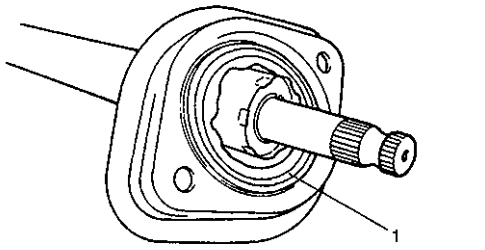

1. Steering column lower seal

5) Check steering column lower seal for breakage or deformation.
If found defective, replace.

6) Check steering shaft joints and shaft for any damages such as crack, breakage, malfunction or excessive play. If anything is found faulty, replace as lower joint assembly or column assembly.
7) Check steering shaft for smooth rotation.
If found defective, replace as column assembly.
8) Check steering shaft and column for bend, cracks or deformation.
If found defective, replace.

TIGHTENING TORQUE SPECIFICATIONS

Fastening parts	Tightening torque		
	N·m	kg-m	lb-ft
Driver air bag (inflator) module bolt	9	0.9	6.5
Steering shaft nut	33	3.3	23.5
Steering column mounting bolt and nut	14	1.4	10.5
Steering shaft joint bolt	25	2.5	18.0

REQUIRED SERVICE MATERIAL

MATERIAL	RECOMMENDED SUZUKI PRODUCT	USE
Water tight sealant	SEALING COMPOUND 366E (99000-31090)	To apply to steering column seal.

SPECIAL TOOL

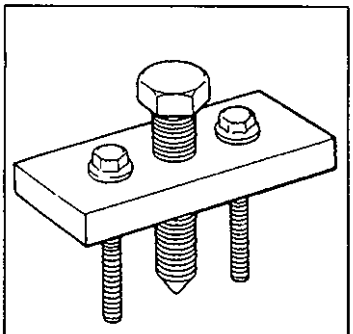

09944-36011
Steering wheel remover

SECTION 3D

FRONT SUSPENSION

WARNING:
When hoisting vehicle, be sure to select the lifting point suitable for the service work referring to SECTION 0A.

NOTE:

- **All front suspension fasteners are an important attaching part in that it could affect the performance of vital parts and systems, and/or could result in major repair expense. They must be replaced with one of the same part number or with an equivalent part if replacement becomes necessary. Do not use a replacement part of lesser quality or substitute design. Torque values must be used as specified during reassembly to assure proper retention of this part.**
- **Never attempt to heat, quench or straighten any front suspension part. Replace it with a new part or damage to the part may result.**

CONTENTS

GENERAL DESCRIPTION 3D- 2
4WD Control System 3D- 3
DIAGNOSIS 3D- 8
Diagnosis Table 3D- 8
4WD Controller And Its Circuit Check 3D-10
4WD Control System Check 3D-11
Stabilizer Bar/Bushing Check 3D-13
Shock Absorber And/Or Coil Spring Check . 3D-13
Leading Arm/Lateral Rod/Steering Knuckle Check 3D-14
Leading Arm Bushing/Lateral Rod Bushing Check 3D-14
Kingpin/Kingpin Bearing Check 3D-14
Barfield Joint Check 3D-14
Steering Knuckle Seal Check 3D-15
Wheel Disc, Nut & Bearing Check 3D-15
ON VEHICLE SERVICE 3D-16
Stabilizer Bar/Bushings 3D-16
Front Shock Absorber 3D-17
Coil Spring 3D-17
Bump Stopper And Spring Upper Seat 3D-19
Wheel Hub/Bearing/Oil Seal 3D-19
Steering Knuckle/Wheel Spindle 3D-24
Front Axle Shaft/Oil Seal/ Kingpin Bearing Outer Race 3D-29
Steering Knuckle Seal 3D-30
Lateral Rod 3D-31
Leading arm 3D-32
Front Axle Housing 3D-33
TIGHTENING TORQUE SPECIFICATIONS .. 3D-39
REQUIRED SERVICE MATERIALS 3D-40
SPECIAL TOOLS 3D-41

GENERAL DESCRIPTION

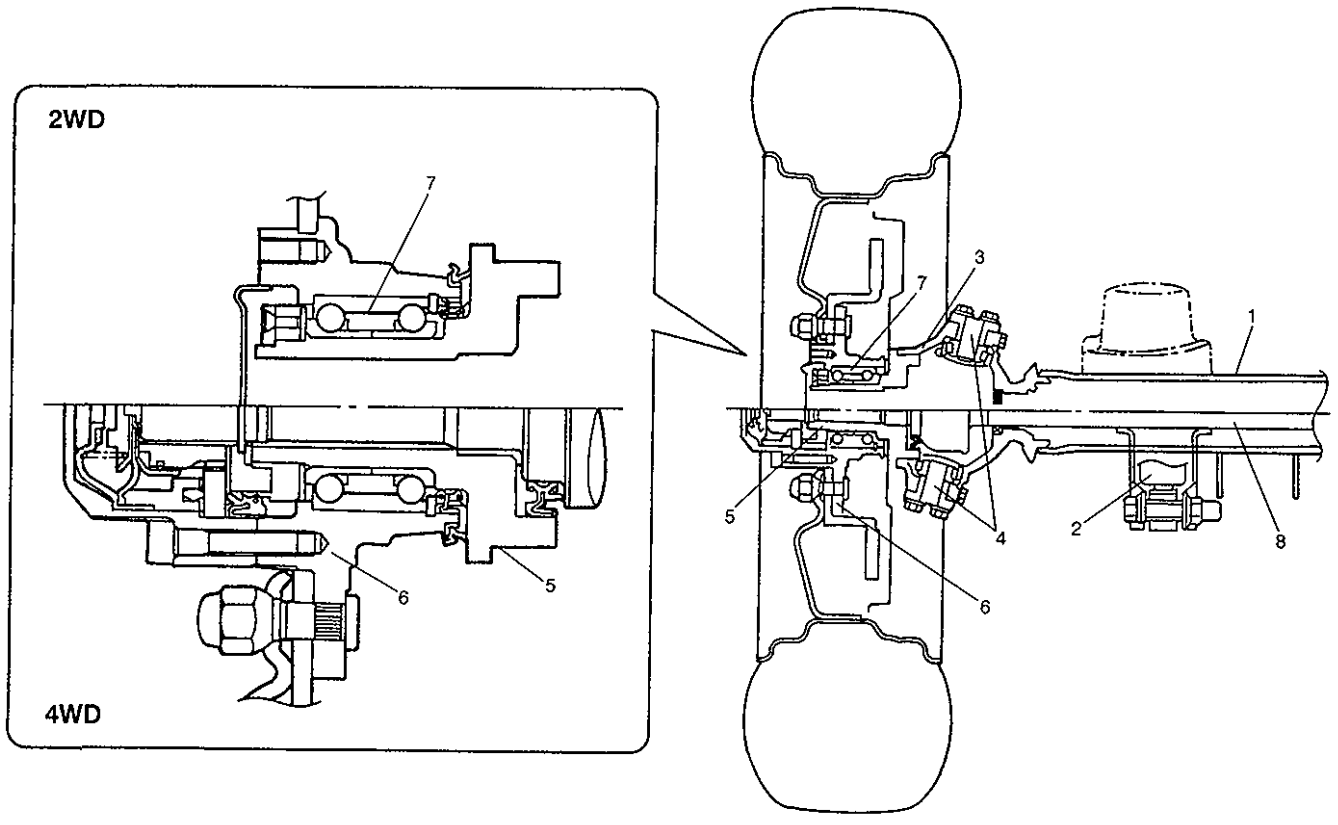

1. Front axle housing
2. Shock absorber
3. Steering knuckle
4. Kingpin
5. Wheel spindle
6. Wheel hub
7. Wheel bearing
8. Front axle shaft (4WD)

4WD CONTROL SYSTEM

The 4WD control system consists of a 4WD switch, a vacuum switch, a vacuum tank, two vacuum switching valves (VSV1 and VSV2) and air locking hub assemblies.

The 4WD controller controls locking or unlocking of the air locking hub according to operation of the transfer shift control lever.

Vacuum generated in the intake manifold passes through the check valve and stored in the vacuum tank.

According to signals from the 4WD switch, the 4WD controller activates VSV1 (for unlocking) or VSV2 (for locking) to apply vacuum from the vacuum tank so that the front axle and the wheel hub are disengaged or engaged.

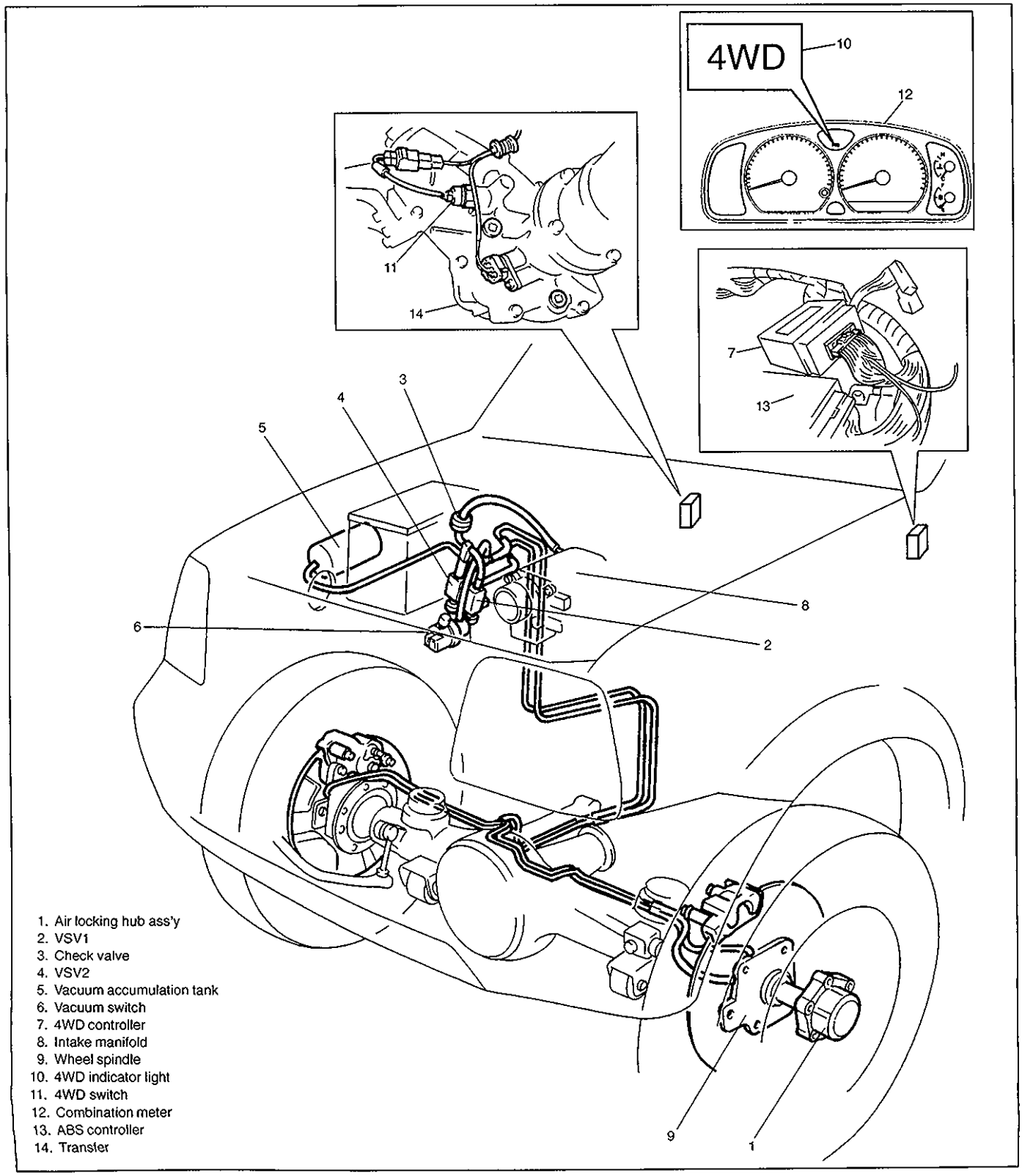

1. Air locking hub ass'y
2. VSV1
3. Check valve
4. VSV2
5. Vacuum accumulation tank
6. Vacuum switch
7. 4WD controller
8. Intake manifold
9. Wheel spindle
10. 4WD indicator light
11. 4WD switch
12. Combination meter
13. ABS controller
14. Transfer

SYSTEM CIRCUIT

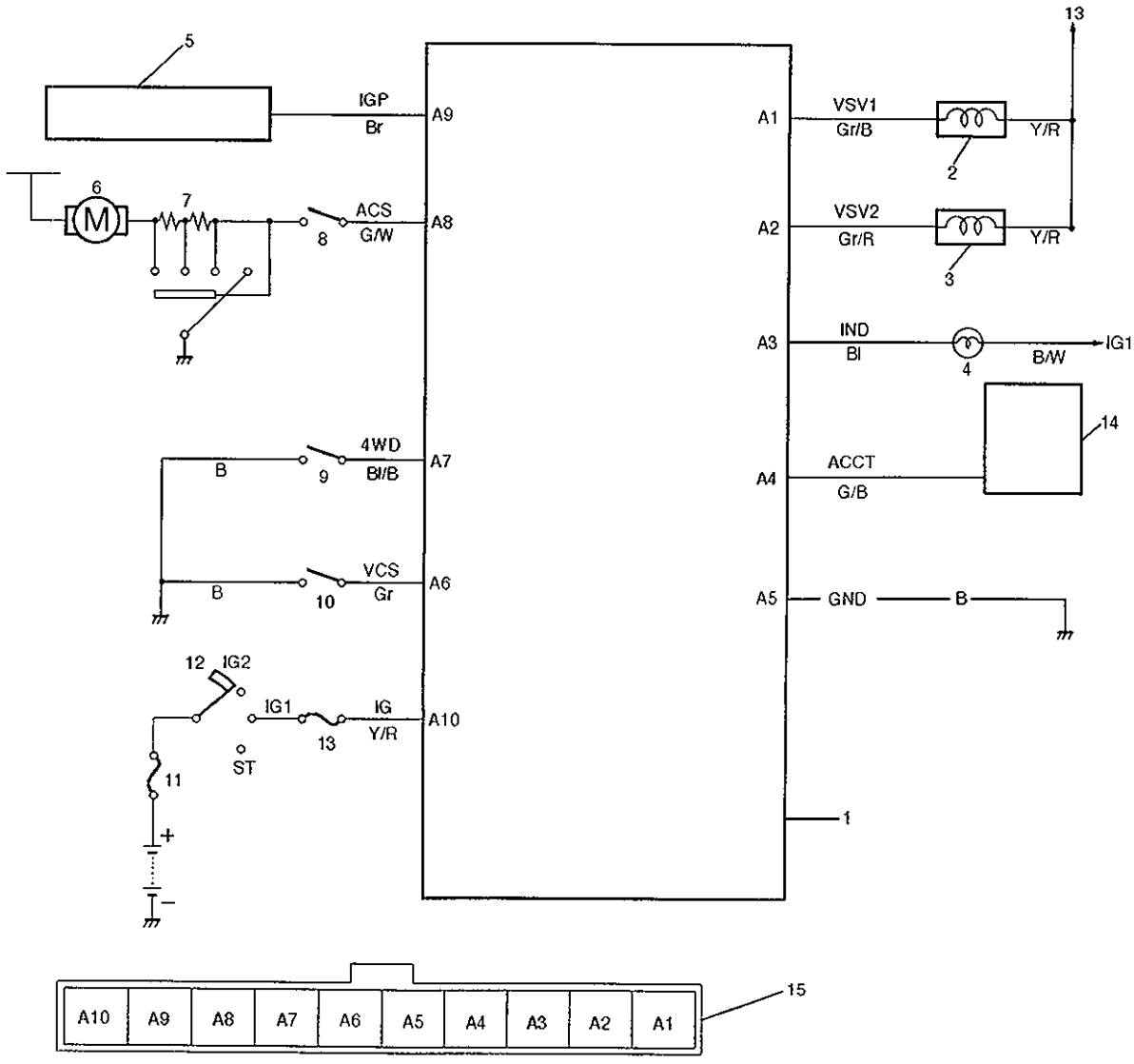

1. 4WD controller
2. VSV1
3. VSV2
4. 4WD indicator lamp
5. ECM
6. Blower fan motor
7. Blower fan switch
8. A/C switch (if equipped)
9. 4WD switch
10. Vacuum switch
11. Main fuse
12. IG switch
13. IG fuse
14. A/C controller (if equipped)
15. Coupler of 4WD controller

Operation

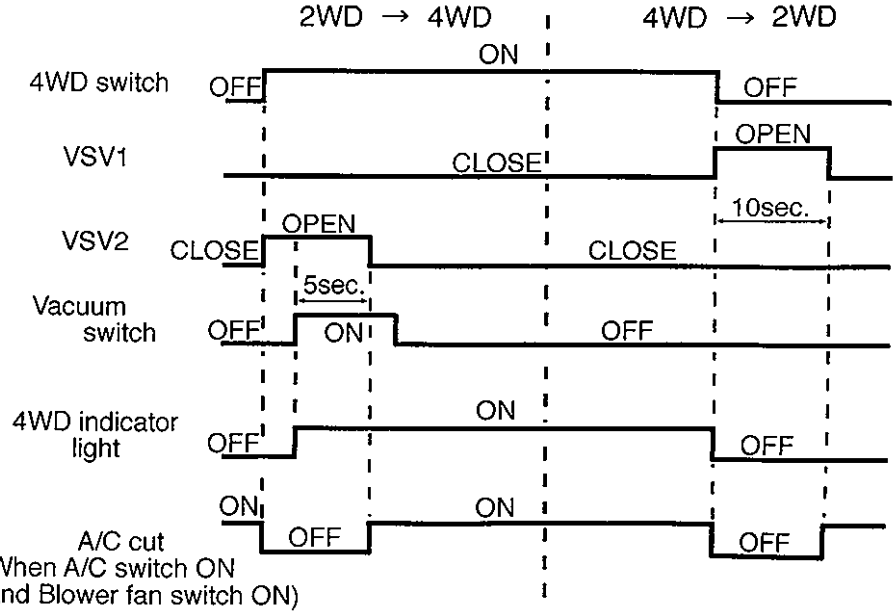

COMPONENTS AND FUNCTIONS

Component	Function
4WD switch	When the transfer shift lever is shifted to 4L or 4H position from 2H, this switch turns ON and cause the 4WD control system to turn ON.
4WD controller	When the 4WD switch turns on, the 4WD controller activates VSV2 to lock the air locking hubs and when it receives an "ON" signal from the vacuum switch, it makes VSV2 to complete operation within 5 seconds and causes the 4WD indicator light to light up. If vacuum in the vacuum circuit fails to reach the specified level due to a leakage in the vacuum circuit (when no "ON" signal is inputted from the vacuum switch), the 4WD controller stops operation of VSV2 in 15 seconds and makes the 4WD indicator light to flash to warn occurrence of a trouble. When the 4WD switch turns off, the 4WD controller activates VSV1 for 10 seconds to unlock the hubs and at the same time makes the 4WD indicator light turn off.
VSV1	VSV1 operates according to the signal from the 4WD controller. When it is activated, the port opens and vacuum in the intake manifold is applied through the vacuum circuit to unlock to the slide gear in the air locking hub. As a result, the air locking hubs are unlocked.
VSV2	VSV2 operates according to the signal from the 4WD controller. When it is activated, the port opens and vacuum in the intake manifold is applied through the vacuum circuit to lock to the slide gear in the air locking hub. As a result, the air locking hubs are locked.
Vacuum switch	When VSV2 receives the "ON" signal from 4WD switch, vacuum is applied through its circuit to the vacuum switch. The vacuum switch turns on when it detects vacuum exceeding 260 mmHg.
"4WD" indicator lamp	It lights up when 4WD control system is in the 4WD mode. It flashes to warn that locking hub operation has not completed (4WD control system fails to shift 4WD).

OPERATION

2WD → 4WD

When the transfer shift control lever is shifted from the 2WD (2H) position to the 4WD (4H or 4L) position, a 4WD "ON" signal is transmitted to the 4WD controller which then activates VSV2 to apply vacuum in the intake manifold to the chamber "B" in the hub housing.

When vacuum is applied, the slide gear is separated from the magnet, moves toward the center of the vehicle body and gets engaged with the outer gear. In this way, the front axle shaft and the front wheel hub rotate as one unit.

If vacuum in the circuit fails to reach 260 mmHg within 15 seconds after operation of VSV2 due to such trouble as a hole in the vacuum pipe, the slide gear does not operate and the 4WD indicator light flashes to warn that the hub is unlocked.

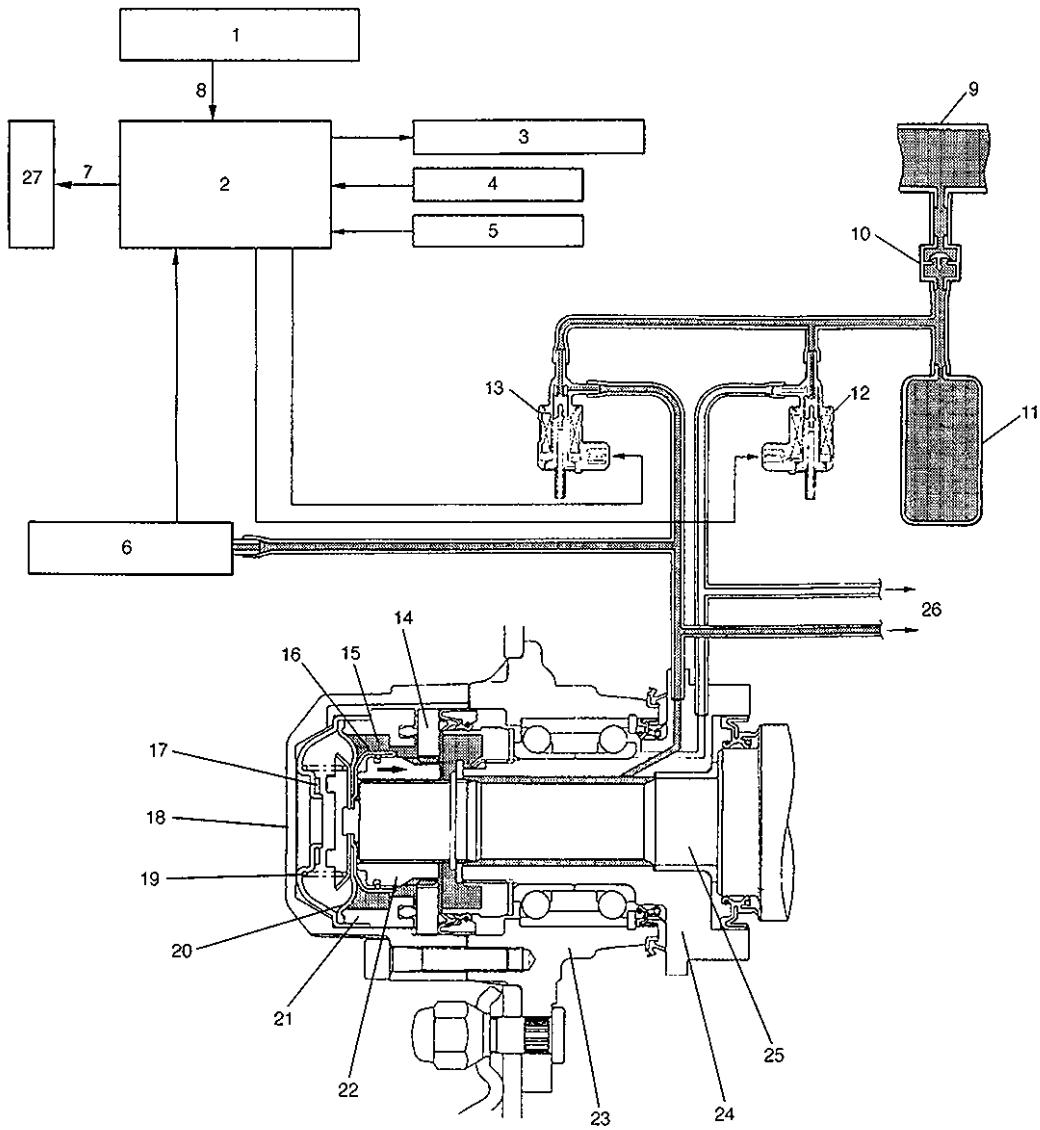

1. ECM
2. 4WD controller
3. 4WD indicator lamp
4. 4WD switch
5. A/C switch (if equipped)
6. Vacuum switch
7. A/C cut signal (if equipped)
8. Engine speed signal
9. Intake manifold
10. Check valve
11. Vacuum tank
12. VSV1
13. VSV2
14. Outer gear
15. Chamber B
16. Piston A
17. Magnet
18. Housing
19. Spring
20. Diaphragm
21. Sleeve
22. Slide gear
23. Wheel hub
24. Spindle
25. Front axle shaft
26. To opposite side
27. A/C controller

: Vacuum circuit

4WD → 2WD

When the transfer shift control lever is shifted from the 4WD (4H or 4L) to the 2WD (2H) position, the 4WD controller activates VSV1 and the intake manifold vacuum is applied to the chamber "A" in the hub housing. As the slide gear is shifted to the wheel side by the vacuum force and disengaged from the outer gear, rotation of the front wheel hub is not transmitted to the front axle shaft.

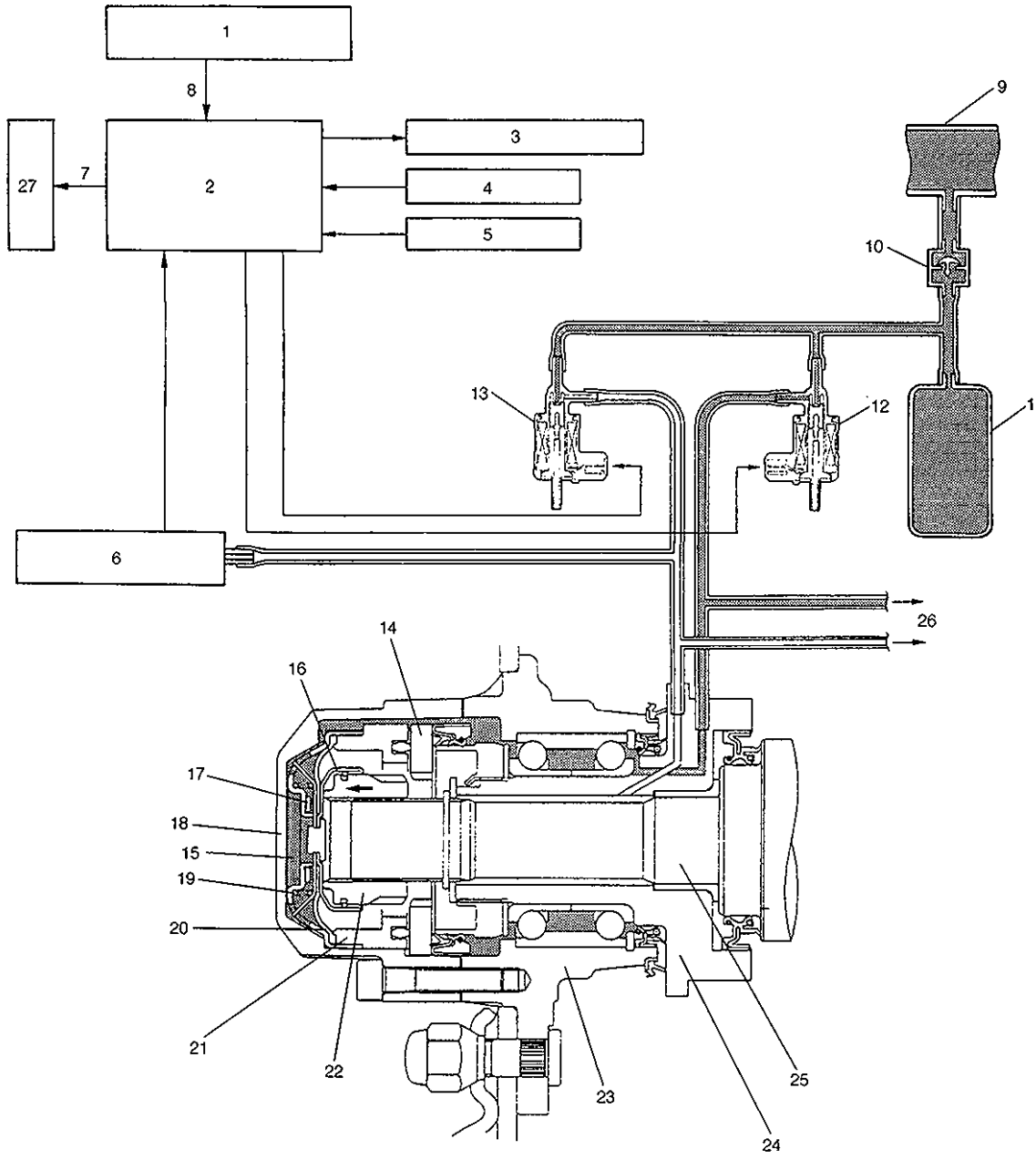

1. EPI & A/C controller
2. 4WD controller
3. 4WD indicator lamp
4. 4WD switch
5. A/C switch (if equipped)
6. Vacuum switch
7. A/C cut signal (if equipped)
8. Engine speed signal
9. Intake manifold
10. Check valve
11. Vacuum tank
12. VSV1
13. VSV2
14. Outer gear
15. Chamber A
16. Piston A
17. Magnet
18. Housing
19. Spring
20. Diaphragm
21. Sleeve
22. Slide gear
23. Wheel hub
24. Spindle
25. Front axle shaft
26. To opposite side
27. A/C controller

: Vacuum circuit

DIAGNOSIS

DIAGNOSIS TABLE

For description not found in the table below, refer to DIAGNOSIS TABLE in Section 3.

4WD CONTROL SYSTEM

Condition	Possible Cause	Correction
4WD indicator light flashing	• Hub locking procedure error	Shift transfer shift control lever 2WD → 4WD once again
	• Defective VSV2	Replace
	• Defective vacuum switch	Replace
	• Defective check valve or vacuum tank	Replace
	• Air leak from vacuum circuit	Check and repair
	• Clogged vacuum hose or pipe	Replace
	• Faulty 4WD controller	Check and replace
2WD/4WD switching error	• Defective air locking hub ass'y	Replace
	• Abnormality in 4WD control system	Inspect referring to "4WD CONTROL SYSTEM DIAGNOSTIC FLOW TABLE"
	• Air leakage from vacuum circuit	Check and replace
	• Clogged vacuum hose or pipe	Replace
	• Defective check valve or vacuum tank	Replace

4WD CONTROL SYSTEM DIAGNOSTIC FLOW TABLE

Before performing the trouble diagnosis, check that the air locking hub assemblies are in good condition and there is no air leakage from vacuum hoses and vacuum pipe. Refer to "ON-VEHICLE SERVICE" in this section for air leakage.

[NOTES ON SYSTEM CIRCUIT INSPECTION]

- Be sure to read "Precautions for Electrical Circuit Service" in Section 0A before circuit inspection and observe what is written there.
- For system circuit, refer to the figure of "GENERAL DESCRIPTION" in this section.

STEP	ACTION	YES	NO
1	Check ground circuit. 1) Disconnect coupler from 4WD controller with ignition switch OFF. 2) Check for proper connection to 4WD controller at all terminals. 3) If OK, check continuity between A5 terminal and body ground. Is there continuity between A5 terminal and body ground?	Go to Step 2.	"B" wire is open.
2	Check power circuit. 1) Disconnect coupler from 4WD controller. 2) Turn ignition switch ON. 3) Check voltage between A10 terminal and ground. Is it 10 – 14 V?	Go to Step 3.	"Y/R" circuit is open or short.
3	Check 4WD switch circuit. 1) Connect coupler to 4WD controller. 2) Turn ignition switch ON and check voltage between A7 terminal and ground. Transfer lever is in 2H: about 10 – 14 V Transfer lever is in 4L or 4H: about 0 V Is check result satisfactory?	Go to Step 4.	Check 4WD switch (refer to Section 7D), "Bl/B" and "B" circuits of 4WD switch. If OK, substitute a known-good 4WD controller and recheck.
4	Check VSV1 circuit. 1) Turn ignition switch ON. 2) Check voltage between A1 terminal and ground. Is it 10 – 14 V when transfer lever is in 4H or 4L range and about 0 V for 10 seconds after it is shifted to 2H range?	Go to Step 5.	Check VSV1 (refer to 4WD CONTROL SYSTEM CHECK in this section), "Y/R" and "Gr/B" circuits of VSV1. If OK, substitute a known-good 4WD controller and recheck.
5	Check VSV2 circuit. 1) Turn ignition switch ON. 2) Check voltage between A2 terminal and ground. Is it 10 – 14 V when transfer lever is in 2H range and about 0 V for 5 seconds after it is shifted to 4H or 4L range?	Go to Step 6.	Check VSV2 (refer to 4WD CONTROL SYSTEM CHECK in this section), "Y/R" and "Gr/R" circuits of VSV2. If OK, substitute a known-good 4WD controller and recheck.
6	Check vacuum switch circuit. 1) Turn ignition switch ON (stating engine). 2) Check voltage between A6 terminal and ground. Is it 10 – 14 V when transfer lever is in 2H range and about 0 V for 5 seconds after it is shifted to 4H or 4L range?	Go to Step 7.	Check vacuum switch (refer to 4WD CONTROL SYSTEM CHECK in this section), "Gr" and "B" circuits of vacuum switch. If OK, substitute a known-good 4WD controller and recheck.
7	Check 4WD indicator light circuit. 1) Turn ignition switch ON. 2) Check voltage between A3 terminal and ground. Is it 10 – 14 V when transfer lever is in 2H range and about 0 V within 15 seconds after it is shifted to 4H or 4L range?	Substitute a known-good 4WD controller and recheck.	Check "Bl" circuit (including indicator light and combination meter refer to Section 8). If OK, substitute a known-good 4WD controller and recheck.

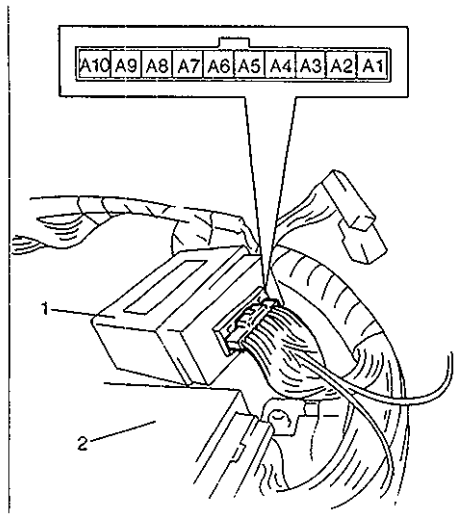

1. 4WD controller
2. ABS controller (if equipped)

4WD CONTROLLER AND ITS CIRCUIT CHECK

VOLTAGE CHECK

Check for input or output voltage of 4WD controller (voltage between each circuit and body ground) with 4WD controller connector connected and ignition switch turned START (engine run).

CAUTION:
- **Disable air bag system (if equipped with Air Bag), refer to Section 10B.**
- **This check must be carried out in a well-ventilated place.**

TERMINAL	CIRCUIT	WIRE COLOR	NORMAL VOLTAGE	CONDITION
A1	VSV1	Gr/B	about 0 V	10 seconds after transfer shift control lever : 4WD → 2WD
			10 – 14 V	Transfer shift control lever: 4WD
A2	VSV2	Gr/R	*about 0 V	5 seconds after transfer shift control lever : 2WD → 4WD
			10 – 14 V	Transfer shift control lever: 2WD
A3	4WD indicator lamp	Bl	*about 0 V	Transfer shift control lever: 4WD
			10 – 14 V	Transfer shift control lever: 2WD
A4	A/C controller	G/B	*10 – 12 V	5 – 10 seconds after engine starts or transfer shift control lever switches.
			about 0 V	A/C switch and blower fan switch ON.
A5	Ground	B	about 0 V	any time
A6	Vacuum switch	Gr	*about 0 V	5 seconds after transfer shift control lever : 2WD → 4WD
			10 – 14 V	Other than above
A7	4WD switch	Bl/B	about 0 V	Transfer shift control lever: 4WD
			10 – 14 V	Transfer shift control lever: 2WD
A8	A/C switch	G/W	about 0 V	A/C switch ON and blower fan switch ON
			10 – 14 V	Other than above
A9	Ignition coil	Br	0 – 1 V	IG: ON
			Voltage varies according to engine speed.	
A10	Ignition switch	Y/R	10 – 14 V	IG: ON

* : With engine running

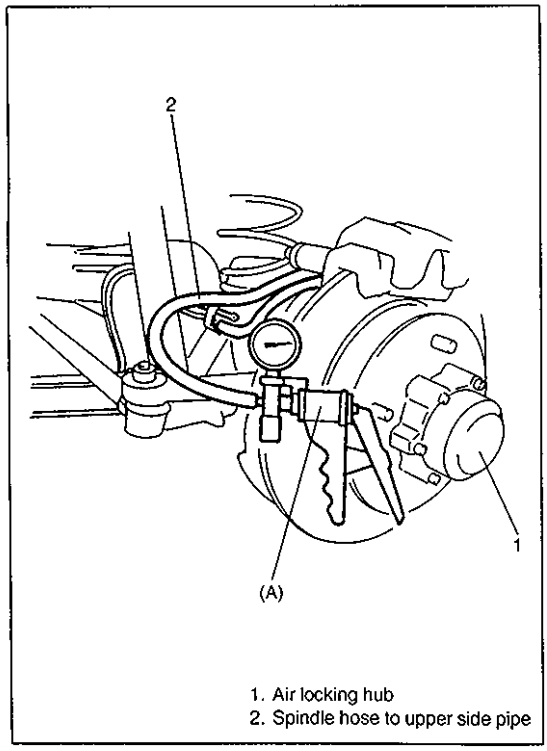

1. Air locking hub
2. Spindle hose to upper side pipe

4WD CONTROL SYSTEM CHECK

AIR LOCKING HUB

1) Start engine and shift transfer shift control lever to 2H position.
2) Connect vacuum pump gauge (special tool) to the spindle hose which is disconnected from upper side pipe as shown. Apply vacuum and check operating sound from air locking hub.
   If there is not operating sound, replace air locking hub assembly.

Vacuum specification:
More than 40 kPa (0.40 kg/cm^2, 5.70 Psi)

Special Tool
(A): 09917-47910

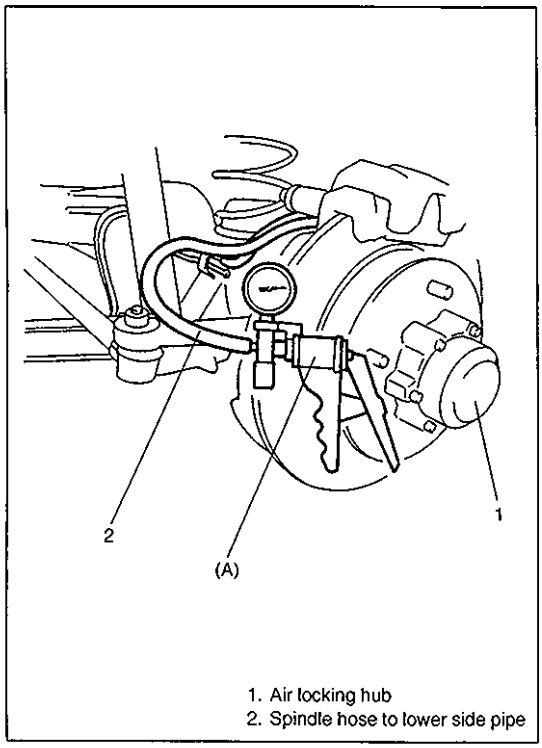

1. Air locking hub
2. Spindle hose to lower side pipe

3) Connect hose, then start engine and shift transfer shift control lever to 4H or 4L position.
4) Connect vacuum pump gauge to the spindle hose disconnected from lower side pipe.
   Apply vacuum and check operating sound.
   If there is no operating sound, replace air locking hub assembly.

Vacuum specification:
More than 40 kPa (0.40 kg/cm^2, 5.70 Psi)

Special Tool
(A): 09917-47910

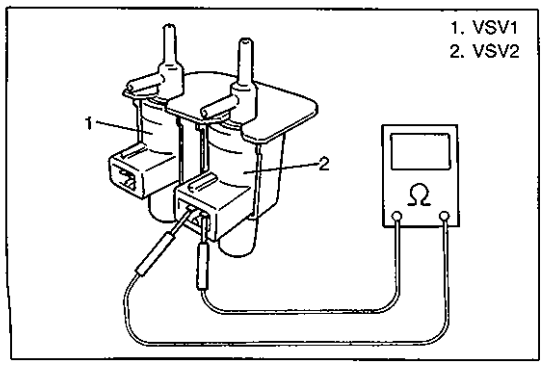

VSV1 AND VSV2

1) Disconnect coupler from VSV1 (VSV2) and check resistance between two terminals of VSV1 (VSV2).
   If resistance is out of specification, replace.

Resistance: 33 – 39 Ω

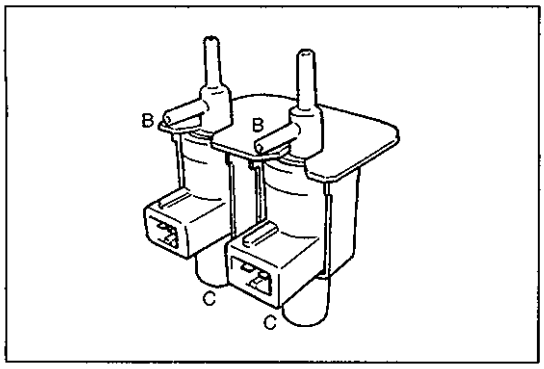

2) Blow air from B and check that air comes out of C.
If found faulty, replace.

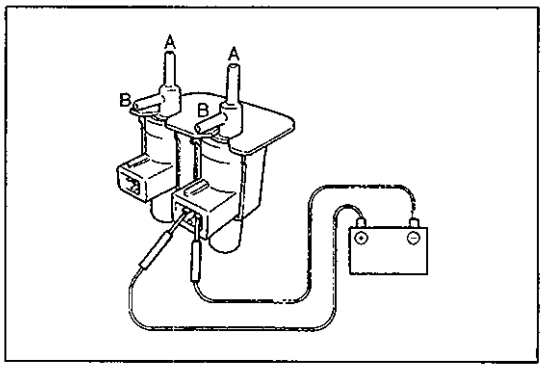

3) Connect 12 V-battery to VSV1 (VSV2) terminals and check continuity between A and B.
Blow air from B and check that air comes out of A.
If found faulty, replace.

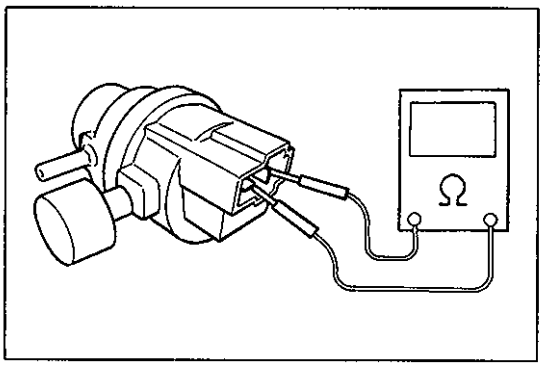

VACUUM SWITCH

1) Disconnect coupler from vacuum switch and check resistance between two terminals of vacuum switch.
If resistance is out of specification, replace.

Resistance: More than 1 MΩ

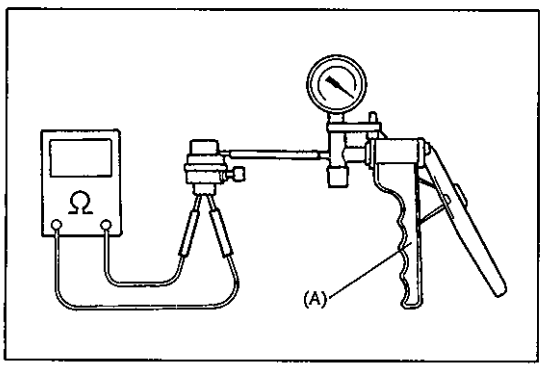

2) Connect vacuum pump gauge and apply vacuum more than 40kPa (0.40kg/cm^2, 5.70Psi), then check resistance between terminals of vacuum switch.
If resistance is out of specification, replace.

Resistance: Less than 0.8 Ω

Special Tool
(A): 09917-47910

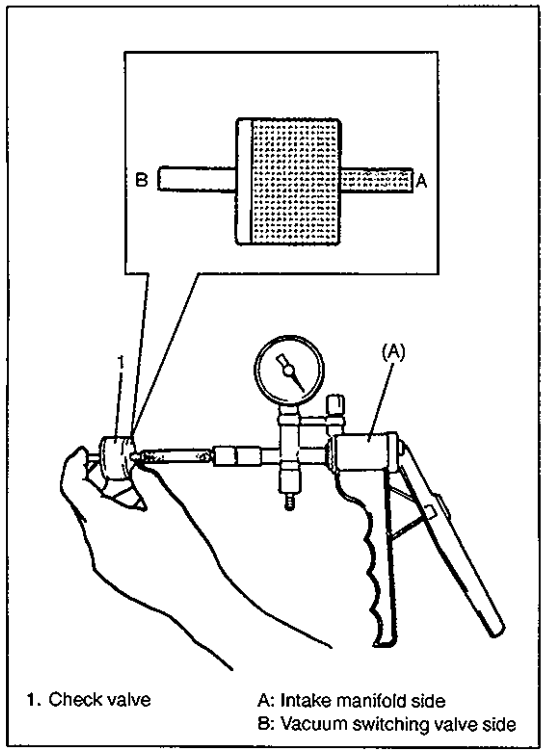

1. Check valve
A: Intake manifold side
B: Vacuum switching valve side

4WD SWITCH

Refer to Section 7D.

VACUUM HOSE/PIPE

Inspect vacuum hoses for leaks or cracks, vacuum pipes for cracks, dents or corrosion. If defective, replace.

CHECK VALVE

1) Remove check valve.
2) Close B side of check valve with finger as shown and apply -50 cmHg vacuum by means of vacuum pump. Then check that vacuum is applied. Apply vacuum to another side of check valve and check that vacuum is not applied.
   Replace if defective.

Special Tool
(A): 09917-47910

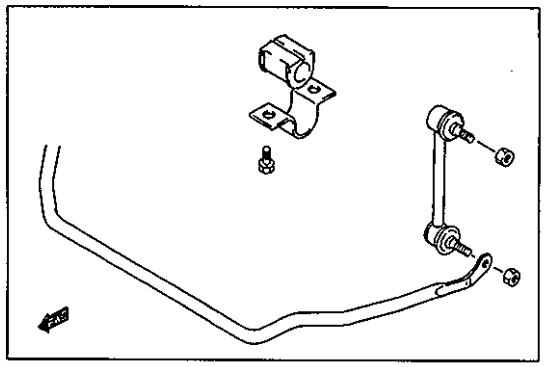

STABILIZER BAR/BUSHING CHECK

BAR

Inspect for damage or deformation. If defective, replace.

BUSHING

Inspect for damage, wear or deterioration. If defective, replace.

SHOCK ABSORBER AND/OR COIL SPRING CHECK

1) Inspect shock absorber for oil leakage. If shock absorber is found faulty, replace it as an assembly unit, because it can not be disassembled.
2) Shock absorber function check
   Check and adjust tire pressures as specified.
   Bounce body three or four times continuously by pushing front end on the side with shock absorber to be checked. Apply the same amount of force at each push and note shock absorber resistance both when pushed and rebounding.
   Also, note how many times vehicle body rebounds before coming to stop after hands are off. Do the same for shock absorber on the other side.
   Compare shock absorber resistance and number of rebound on the right with those on the left.
   And they must be equal in both. With proper shock absorber, body should come to stop the moment hands are off or after only one or two small rebounds. If shock absorbers are suspected, compare them with known good vehicle or shock absorber.

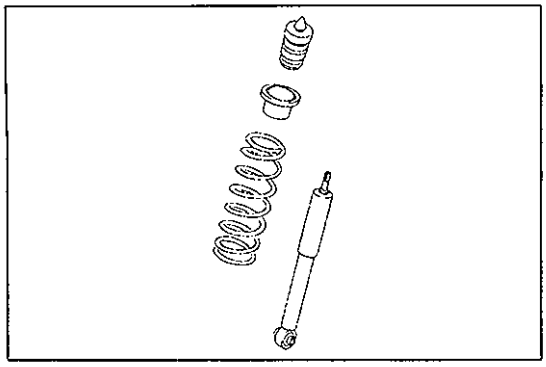

3) Inspect for damage or deformation.
4) Inspect for cracks or deformation in spring seat.
5) Inspect for deterioration of bump stopper.
6) Inspect shock absorber mount for wear, cracks or deformation.

Replace any parts found defective in steps 2) – 6).

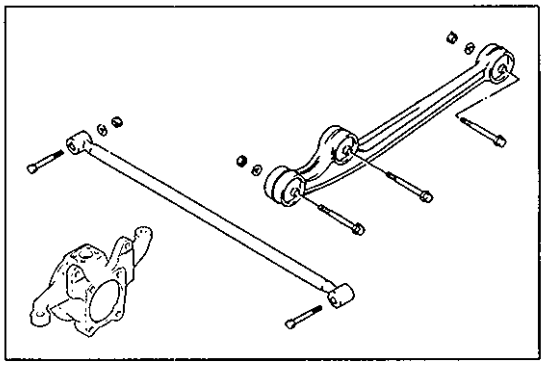

LEADING ARM/LATERAL ROD/STEERING KNUCKLE CHECK

Inspect for cracks, deformation or damage.

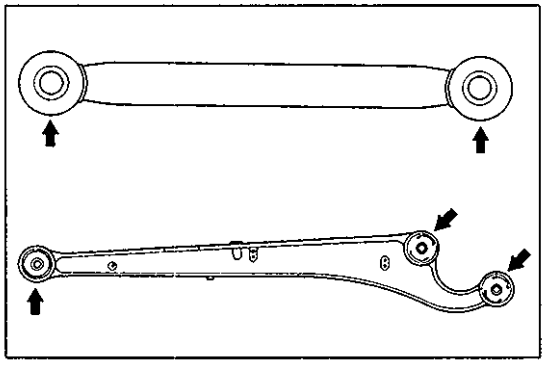

LEADING ARM BUSHING/LATERAL ROD BUSHING CHECK

Inspect for damage, wear or deterioration.

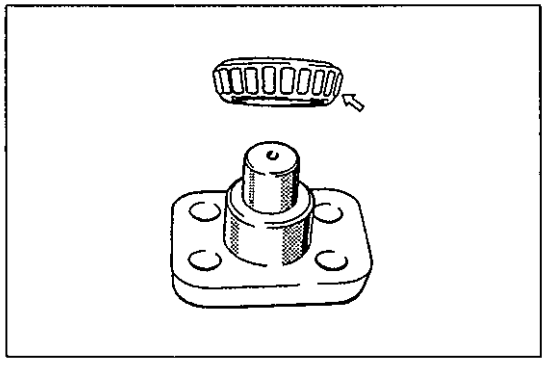

KINGPIN/KINGPIN BEARING CHECK

1) Inspect for wear or deterioration.
2) Inspect for crack, damage or deformation of kingpin.

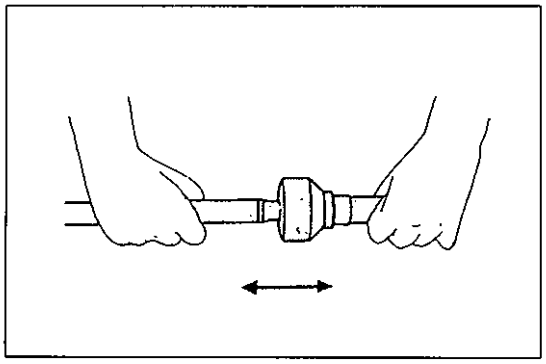

BARFIELD JOINT CHECK

To be checked on this joint is its axial play, which shows up when a push-and-pull motion is given to live axle shaft and wheel spindle held in both hands, as shown in figure. There should be no play at all but a play of up to 1.5 mm (0.06 in.) is permissible. If play exceeds service limit, replace it.

	Standard	Service Limit
Axial play in barfield joint	0 mm (no play)	1.5 mm (0.06 in.)

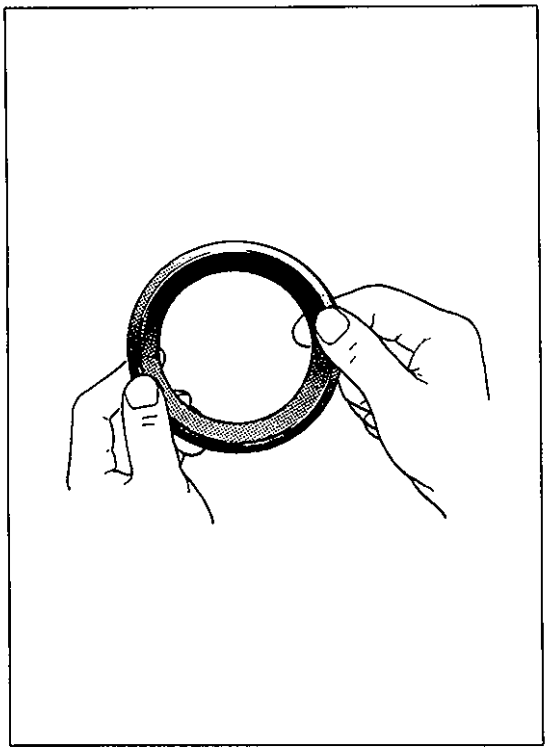

STEERING KNUCKLE SEAL CHECK

The knuckle seal used at the spherical sliding joint between the knuckle and the inner case accomplishes the additional purposes of keeping out road dust and of acting as the damper for the steering handwheel. As the wear of this seal advances, its damping effect decreases and thus make the front wheel develop a tendency to "shimmy" not only that road dust begins to creep into the sliding clearance to promote the wear of the spherical sliding surfaces. Check the knuckle seal for wear or damage. If defective, replace with new one.

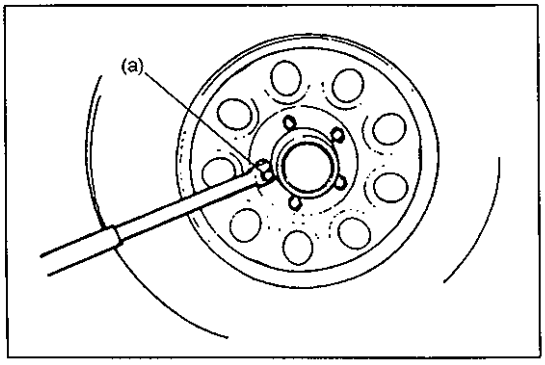

WHEEL DISC, NUT & BEARING CHECK

1) Inspect each wheel disc for dents, distortion and cracks. Disc in badly damaged condition must be replaced.
2) Check wheel nuts for tightness and as necessary, retighten them to specification.

Tightening Torque
(a): 95 N·m (9.5 kg-m, 69.0 lb-ft)

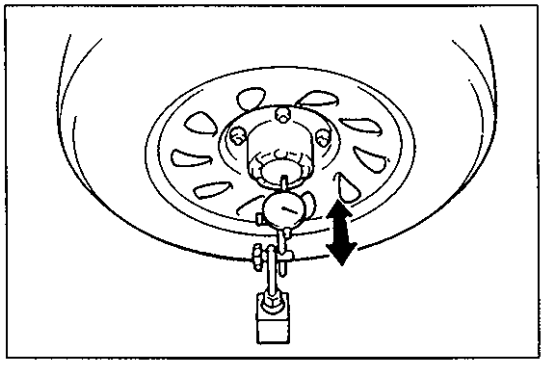

3) Check wheel bearing for wear. After retightening lock nut to specified torque, apply dial gauge to wheel hub center and measure thrust play.

Thrust play limit: 0.05 mm (0.002 in.)

When measurement exceeds limit, replace bearing.

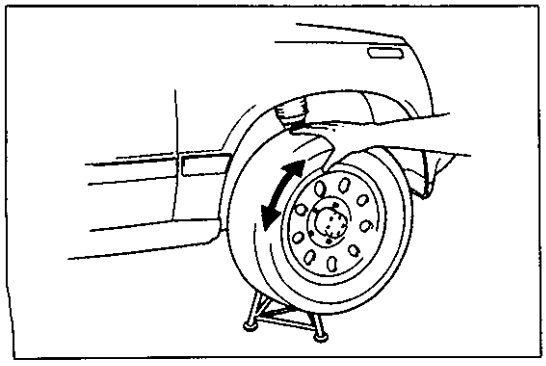

4) By rotating wheel actually, check wheel bearing for noise and smooth rotation. If defective, replace bearing.

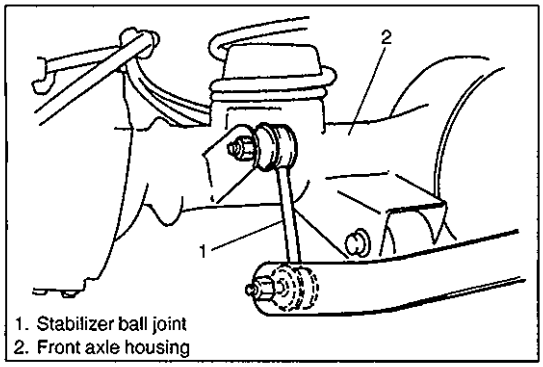

1. Stabilizer ball joint
2. Front axle housing

ON-VEHICLE SERVICE

STABILIZER BAR/BUSHINGS

REMOVAL

1) Hoist vehicle.
2) Remove front bumper, refer to FRONT BUMPER REMOVAL of section 9.
3) Disconnect stabilizer ball joints (right & left) from front axle housing.

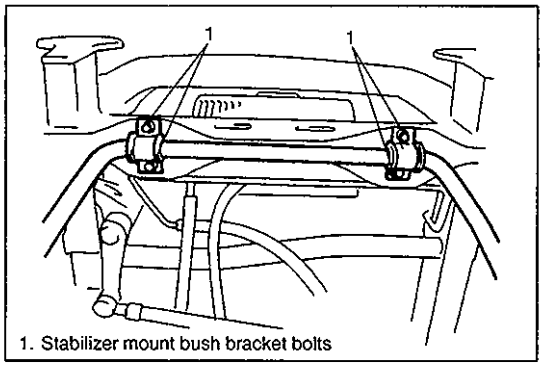

1. Stabilizer mount bush bracket bolts

4) Remove stabilizer bar mount bush bracket bolts.
5) Remove stabilizer bar with its ball joint.
6) Disconnect stabilizer ball joints (right & left) from its bar.

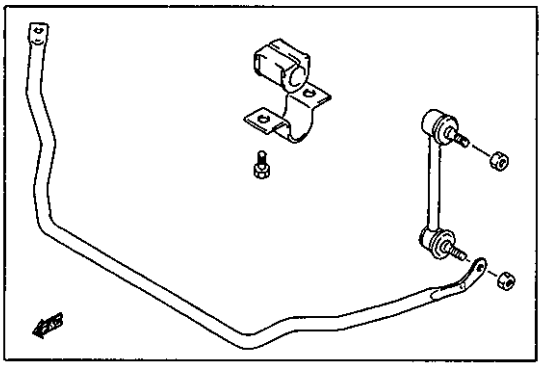

INSTALLATION

1) Connect stabilizer ball joints (right & left) to its bar.

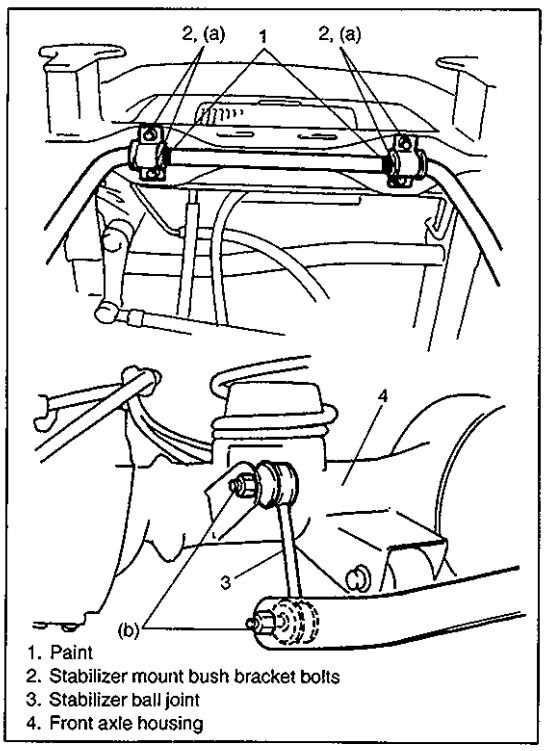

1. Paint
2. Stabilizer mount bush bracket bolts
3. Stabilizer ball joint
4. Front axle housing

NOTE:
For correct installation of stabilizer bar, side-to-side, be sure that color paint on stabilizer bar aligns with mount bush, both right and left, as shown.

2) When installing stabilizer, loosely assemble all components while insuring that stabilizer is centered, side-to-side.
3) Tighten stabilizer bracket bolts and stabilizer ball joint nuts to specified torque.

NOTE:
Tighten stabilizer mount bracket bolts with vehicle hoisted a little in non-load condition.

Tightening Torque
(a): 20 N·m (2.0 kg-m, 14.5 lb-ft)
(b): 50 N·m (5.0 kg-m, 36.5 lb-ft)

4) Install front bumper, refer to FRONT BUMPER INSTALLATION of section 9.
5) Lower hoist.

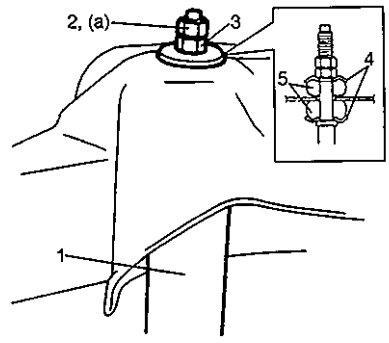

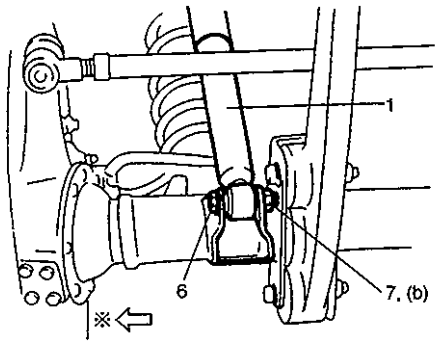

※ : Wheel side

1. Shock absorber
2. Lock nut
3. Absorber nut
4. Washer
5. Bush
6. Lower mounting bolt
7. Lower mounting nut

FRONT SHOCK ABSORBER

REMOVAL

1) Hoist vehicle.
2) Support front axle housing by using floor jack to prevent it from lowering, refer to Section 0A.
3) Remove shock absorber lower mounting bolt.
4) Remove shock absorber upper mounting lock nut and absorber nut. Then remove shock absorber.

INSTALLATION

Install removed parts in reverse order of removal proceeded, noting the followings.

- As shown in figure, install washer and bush first and after tightening absorber nut, tighten lock nut to specified torque.

  Tightening Torque
  (a): 29 N·m (2.9 kg-m, 21.0 lb-ft)

- Install absorber lower mounting bolt in proper direction as shown at the left and tighten it with no load applied to axle housing.

  Tightening Torque
  (b): 90 N·m (9.0 kg-m, 65.0 lb-ft)

- Confirm front end (wheel) alignment referring to Section 3A.

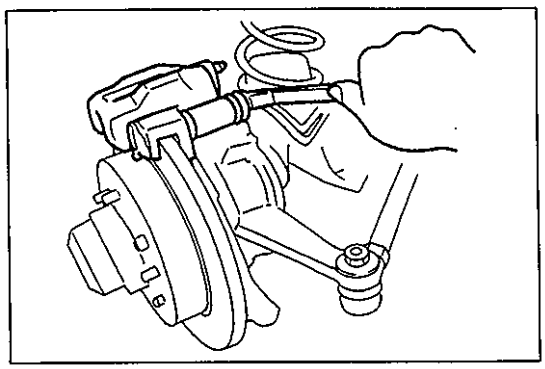

COIL SPRING

REMOVAL

1) Hoist vehicle and remove wheel.
2) Disconnect stabilizer ball joint from axle housing.
3) Remove brake caliper carrier bolts and suspend caliper.

CAUTION:
During removal, be careful not to damage brake flexible hose and wheel speed sensor harness (vehicle with ABS) and not to depress brake pedal.

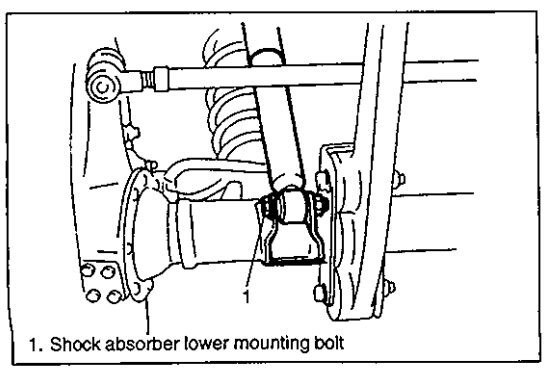

1. Shock absorber lower mounting bolt

4) Support front axle housing by using floor jack.

NOTE:
When supporting axle housing, it should be in non-load condition.

5) Remove shock absorber lower mounting bolt.

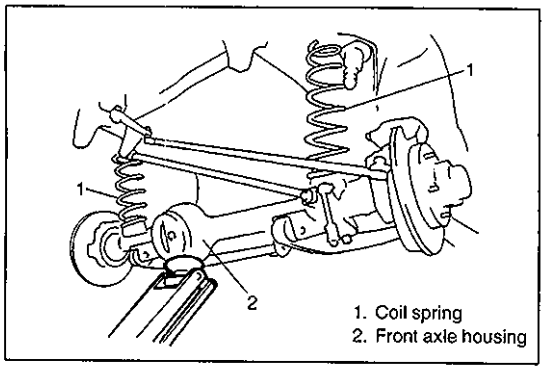

6) Lower front axle housing gradually as far down as where coil spring can be removed.
7) Remove coil spring.

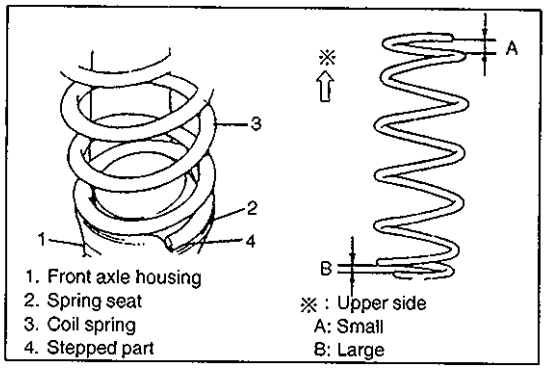

INSTALLATION

Install removed parts in reverse order of removal procedures, noting the followings.

1) Install coil spring.

NOTE:

- **Make sure that coil spring direction as shown.**
- **When seating coil spring, mate spring end with stepped part of lower spring seat.**

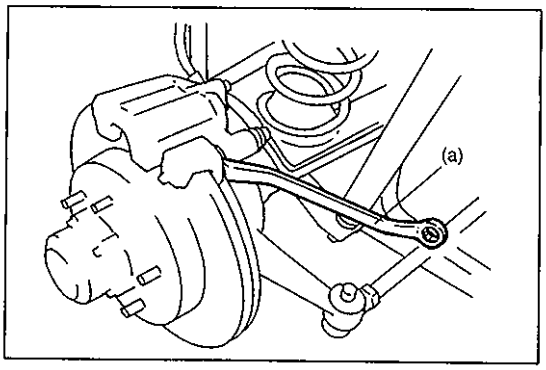

2) Install absorber lower mounting bolt, refer to FRONT SHOCK ABSORBER INSTALLATION in this section.
3) Install caliper assembly and tighten caliper bolts to specified torque.

Tightening Torque
(a): 85 N·m (8.5 kg-m, 61.5 lb-ft)

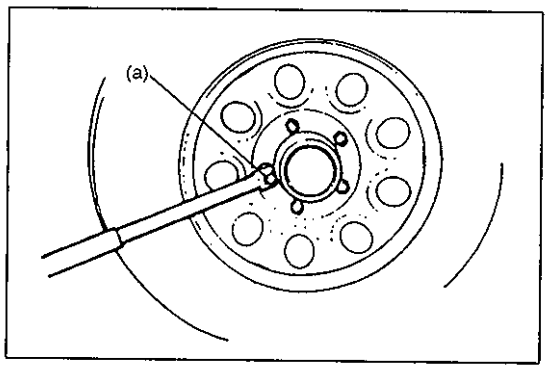

4) Connect stabilizer ball joint to axle housing and tighten nut referring to STABILIZER BAR INSTALLATION in this section for tightening torque specification.
5) Install wheel and tighten wheel nuts to specified torque.

Tightening Torque
(a): 95 N·m (9.5 kg-m, 69.0 lb-ft)

6) Lower hoist.
7) Confirm front end (wheel) alignment, referring to Section 3A.

BUMP STOPPER AND SPRING UPPER SEAT

REMOVAL

1) Remove coil spring, refer to steps 1) to 7) of COIL SPRING REMOVAL in this section.
2) Remove bump stopper and spring upper seat.

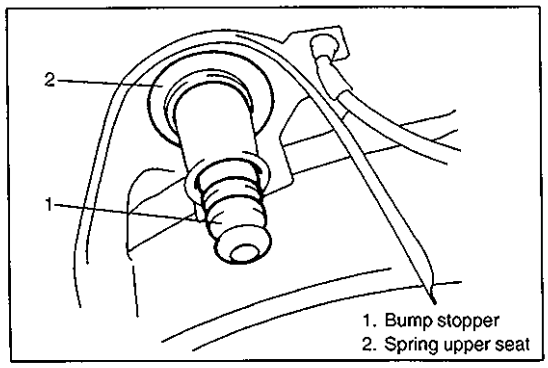

INSTALLATION

1) Install bump stopper and spring upper seat.

NOTE:
Before installing bump stopper, apply soap water on it.

2) Install coil spring, refer to steps 1) to 7) of COIL SPRING INSTALLATION in this section.

WHEEL HUB/BEARING/OIL SEAL

REMOVAL

1) Hoist vehicle and remove wheel.
2) Remove brake caliper carrier bolts and suspend caliper.

CAUTION:
During removal, be careful not to damage brake flexible hose and not to depress brake pedal.

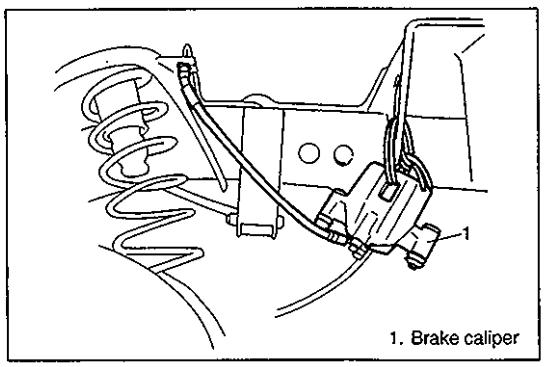

3) Remove ABS wheel sensor (if equipped with ABS).

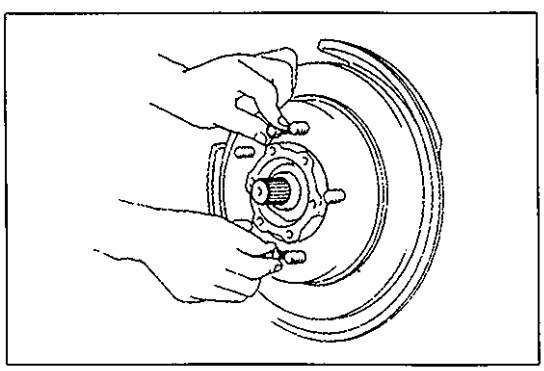

4) Remove brake disc.

NOTE:
If brake disc can not be removed by hand, using 8 mm bolts.

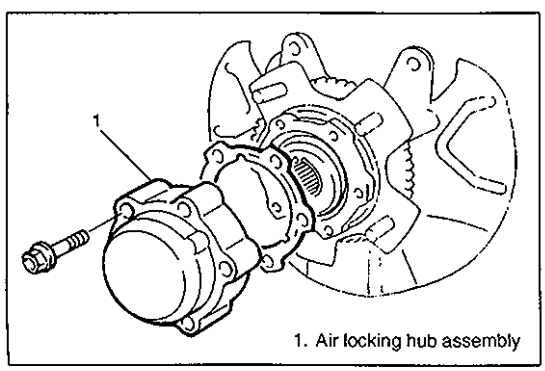

5) Remove air locking hub assembly (for 4WD).

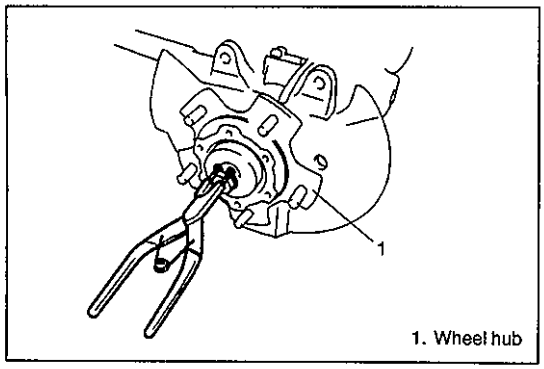

5') Remove hub cap (for 2WD).
6) Remove front axle shaft circlip and wheel spindle thrust washer (for 4WD).

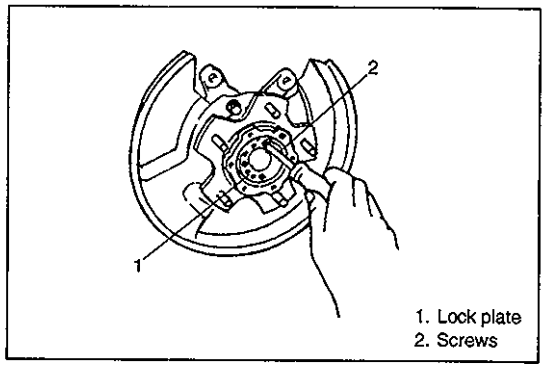

6') Remove front wheel bearing lock plate by loosening 4 screws (for 2WD).

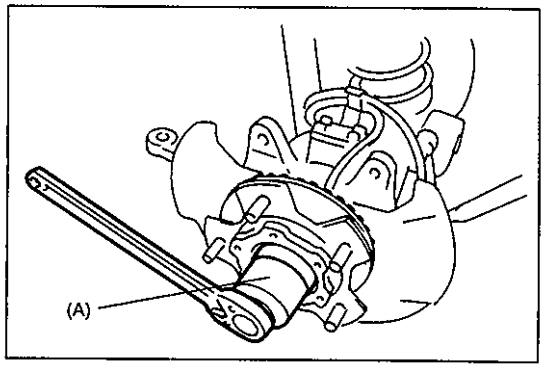

7) Uncaulk front wheel bearing lock nut (for 4WD).
Remove front wheel bearing lock nut by using special tool.

Special Tool
(A): 09944-77010 (For 4WD)
09951-16050 (For 2WD)

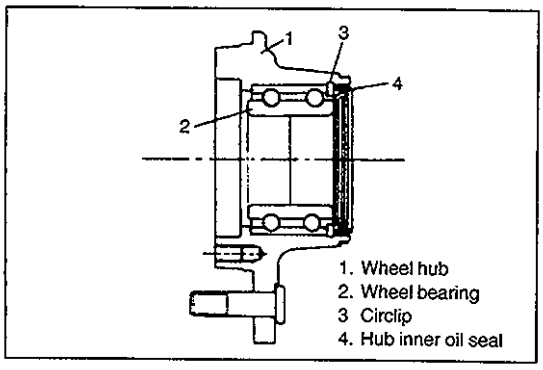

8) Remove front wheel bearing washer.
9) Remove wheel hub complete with bearings and oil seal.

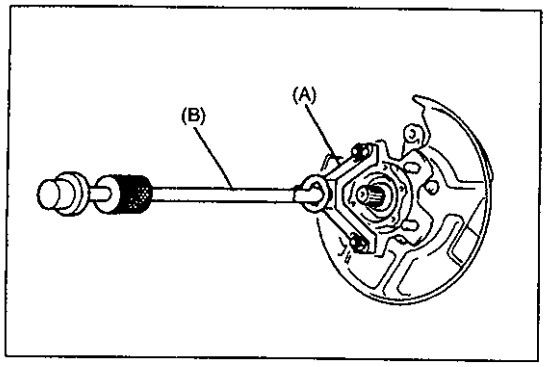

NOTE:
If wheel hub can not be removed by hand, use special tools as shown.

Special Tool
(A): 09943-35511
(B): 09942-15510

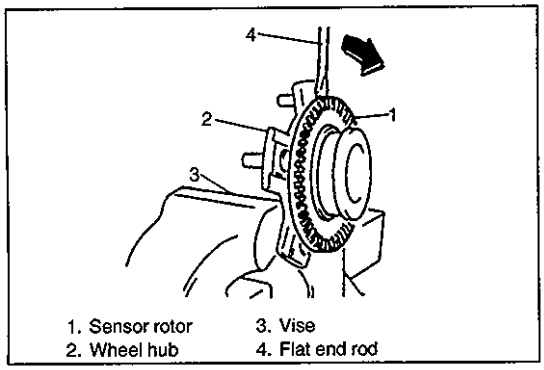

10) Remove sensor rotor from wheel hub as shown (if equipped with ABS).

CAUTION:
Pull out sensor rotor from wheel hub gradually and evenly.
Attempt to pull it out partially may cause it to be deformed.

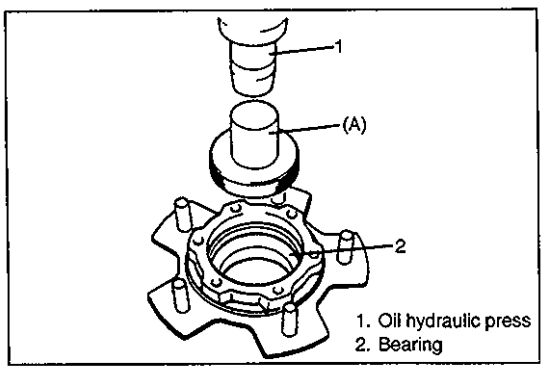

11) Remove wheel bearing oil seal and circlip.
12) Using hydraulic press and special tool remove wheel bearing.

Special Tool
(A): 09913-75520

13) Remove hub bolts from hub.

INSTALLATION

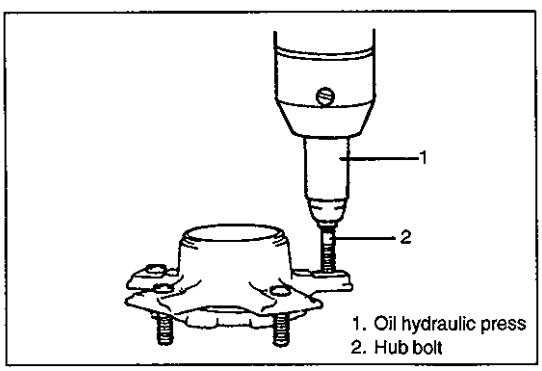

1) Insert new stud in hub hole. Rotate stud slowly to assure serrations are aligned with those made by original bolt.

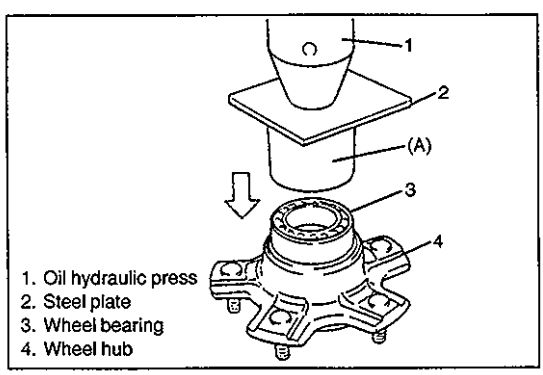

CAUTION:
Press-fit wheel housing vertically to hub.

2) Using special tool, press-fit wheel bearing until its end contacts stepped surface of wheel hub.

Special Tool
(A): 09944-78210

3) Install bearing circlip.

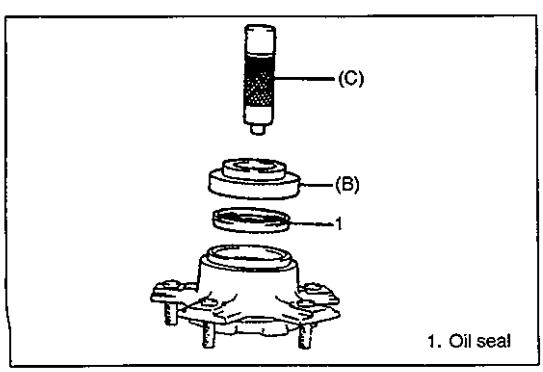

4) Drive in wheel bearing oil seal by using special tools.

Special Tool
(B): 09944-66010
(C): 09924-74510

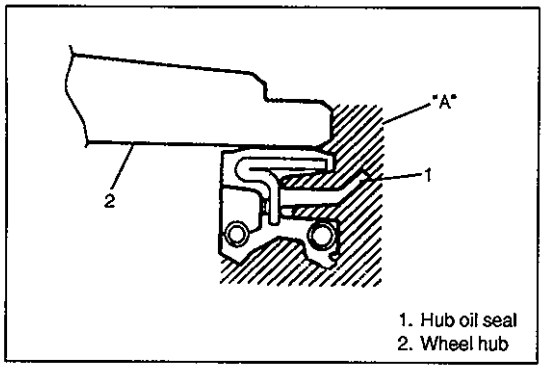

1. Hub oil seal
2. Wheel hub

5) Apply lithium grease to lip portion and hollow of oil seal.

NOTE:
Amount of grease applied to hollow in oil seal should be more than 60% of its vacant space.

"A" : Grease 99000-25010

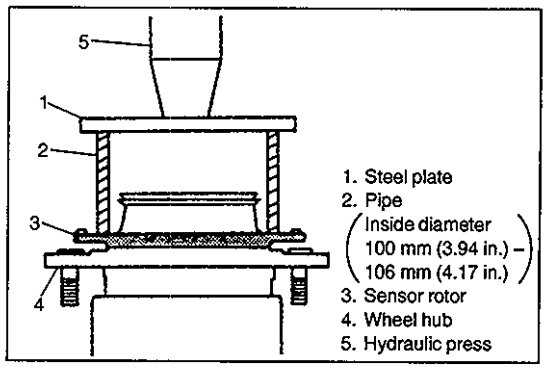

1. Steel plate
2. Pipe (Inside diameter 100 mm (3.94 in.) – 106 mm (4.17 in.))
3. Sensor rotor
4. Wheel hub
5. Hydraulic press

6) Install sensor rotor as shown (if equipped with ABS).

NOTE:
- **Pipe used here should have inner diameter of 100 mm (3.94 in.) – 106 mm (4.17 in.) and its outside should not contact teeth of sensor rotor.**
- **Use care not to insert wheel hub diagonally.**

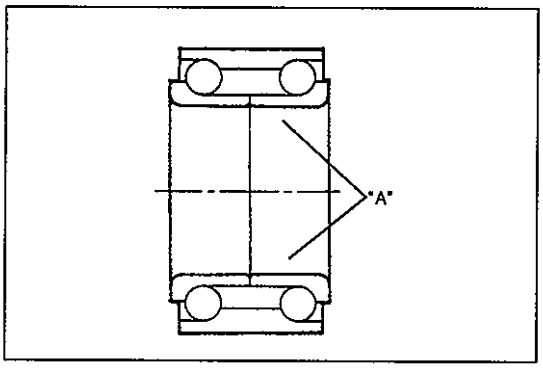

7) Apply lithium grease inside wheel bearing thin.

"A": Grease 99000-25010

8) Install wheel hub complete with bearings and oil seal onto front wheel spindle.
9) Install bearing washer.

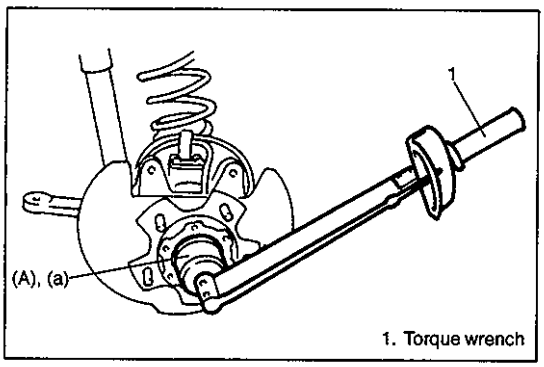

1. Torque wrench

10) Tighten wheel bearing lock nut to specified torque while turning wheel hub by hand.

Special Tool
(A): 09944-77010 (For 4WD)
09951-16050 (For 2WD)

Tightening Torque
(a): 220 N·m (22.0 kg-m, 160 lb-ft)

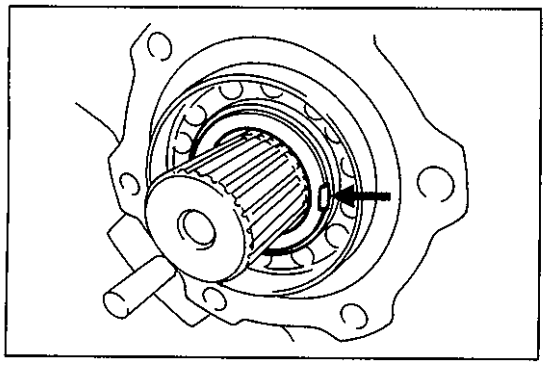

11) Calk front wheel bearing lock nut at groove of spindle (for 4WD).

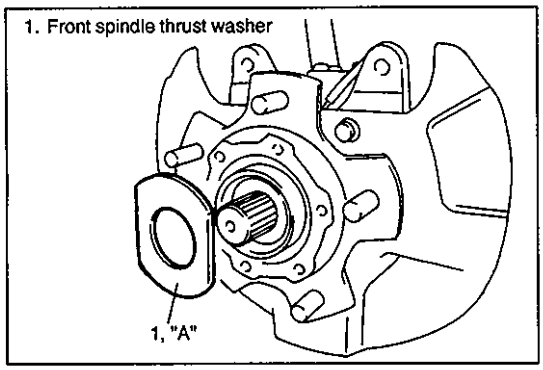

12) Apply lithium grease sufficiently to both surface, all around of front spindle thrust washer (for 4WD).

"A": Grease 99000-25010

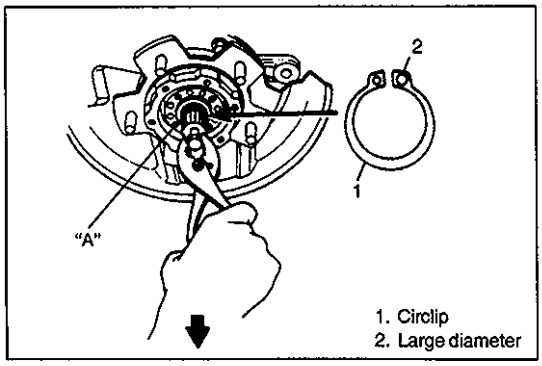

13) Install front axle shaft circlip and apply thin coat of grease to spline part of axle shaft (for 4WD).

NOTE:
When installing circlip to front axle shaft, utilize screw hole in axle shaft to pull it out and bring large diameter of circlip at right as shown.

"A": Grease 99000-25010

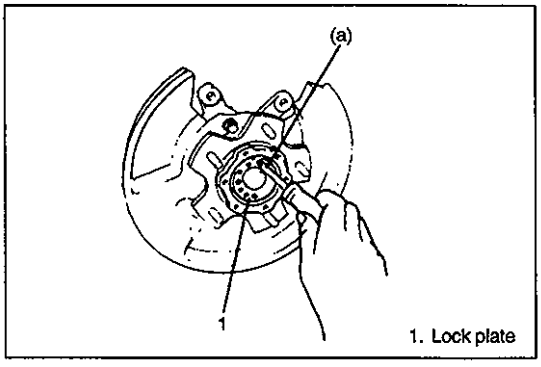

14) Using lock plate, lock bearing lock nut. If lock screw hole is not aligned with screw hole in lock nut, turn lock nut in tightening direction till they align (For 2WD).

Tightening Torque
(a): 1.5 N·m (0.15 kg-m, 1.0 lb-ft)

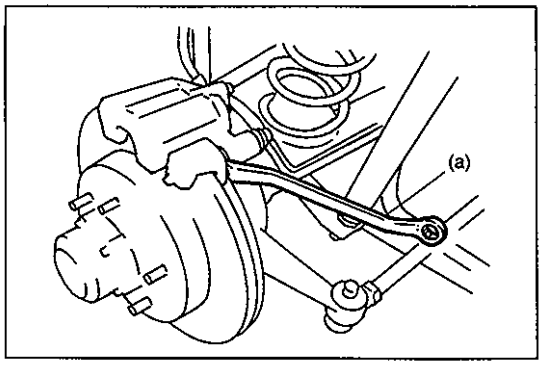

15) Install ABS wheel sensor (if equipped with ABS).
16) Install brake disc and caliper assembly.
Tighten carrier bolts to specified torque.

Tightening Torque
(a): 85 N·m (8.5 kg-m, 61.5 lb-ft)

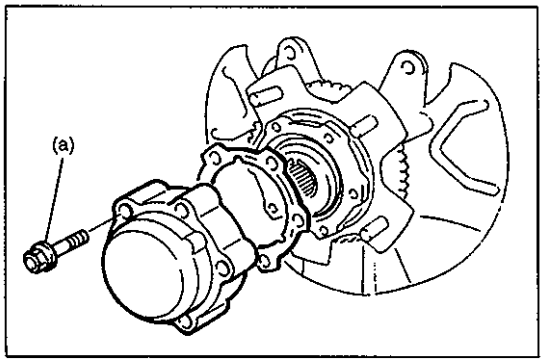

17) For 4WD vehicle
Clean mating surface of air locking hub and wheel hub.
Install air locking hub assembly to wheel hub and tighten bolts to specified torque.

Tightening Torque
(a): 48 N·m (4.8 kg-m, 35.0 lb-ft)

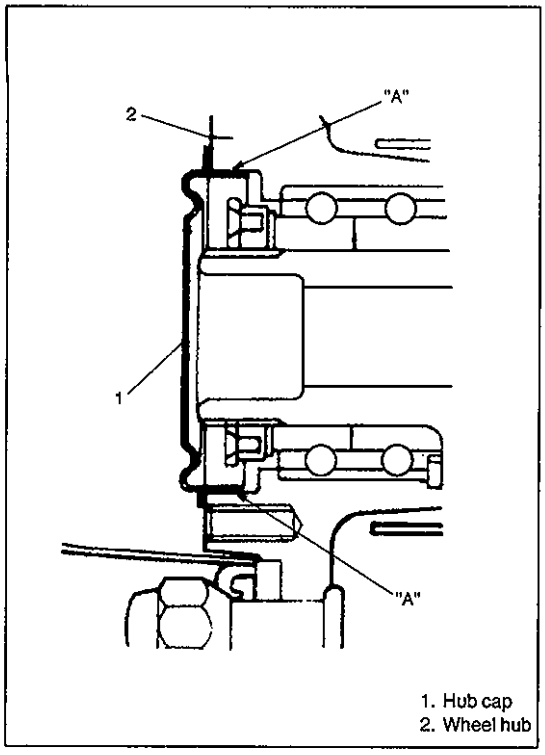

1. Hub cap
2. Wheel hub

18) For 2WD vehicle
Remove grease, old sealant and dusts from mating surfaces of hub cap and wheel hub to clean, apply water tight sealant to hub cap mating surface evenly, and install hub cap to wheel hub.

NOTE:
- **When installing hub cap, hammer lightly several locations on the collar of cap until collar comes closely into contact with wheel hub.**
- **If fitting part of cap is deformed or damaged or if it is fitted loosely, replace with new one.**

"A": Sealant 99000-31090

19) Install wheel and tighten wheel nuts to specified torque, refer to TIGHTENING TORQUE SPECIFICATIONS in this section.
20) Lower hoist.
21) Check air locking hub for air leakage, refer to 4WD SYSTEM CHECK (4WD Vehicle).

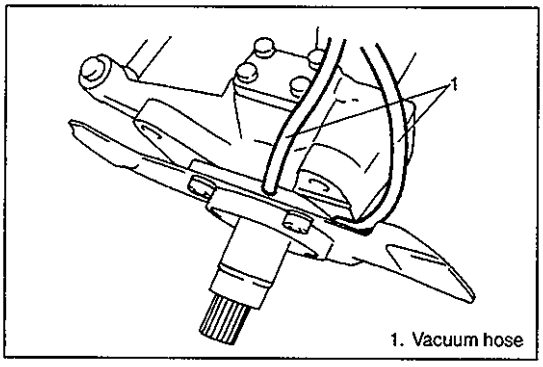

1. Vacuum hose

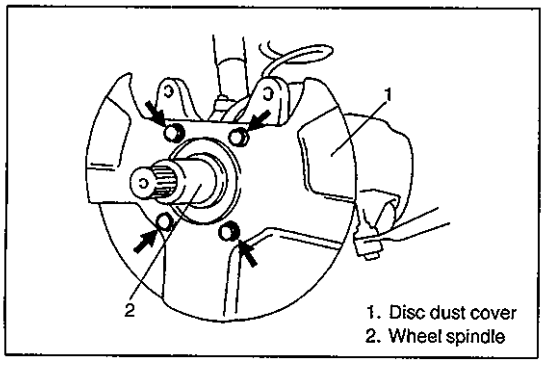

1. Disc dust cover
2. Wheel spindle

STEERING KNUCKLE/WHEEL SPINDLE

REMOVAL

1) Hoist vehicle and remove wheel.
2) Remove wheel hub assembly, refer to steps 2) to 9) of WHEEL HUB REMOVAL in this section.
3) Disconnect spindle vacuum hoses from wheel spindle (for 4WD).

> **CAUTION:**
> **Give match mark to each spindle vacuum hoses before removing hose.**

4) Remove disc dust cover and wheel spindle.

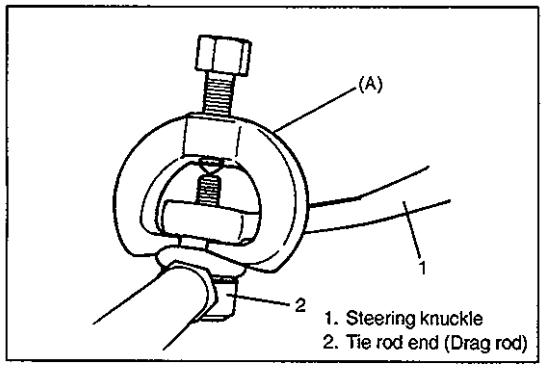

1. Steering knuckle
2. Tie rod end (Drag rod)

5) Remove tie rod end (and drag rod end) nut(s) and disconnect tie rod end (and drag rod end) from steering knuckle with special tool.

Special Tool
(A): 09913-65210

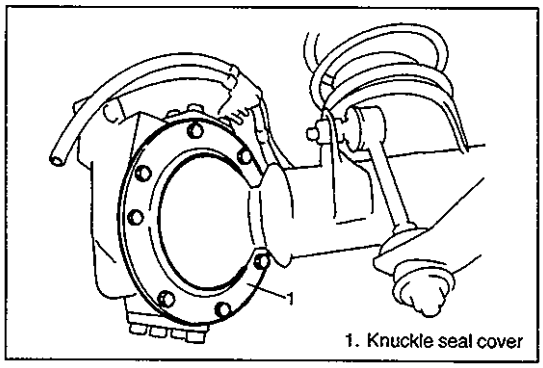

1. Knuckle seal cover

6) Remove knuckle seal cover bolts. Then remove knuckle seal cover, knuckle seal and knuckle seal retainer from knuckle.

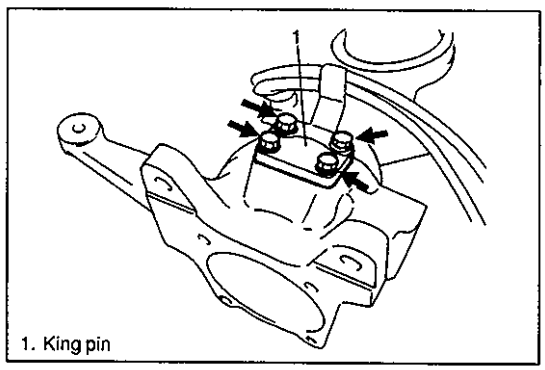

1. King pin

7) Remove lower and upper kingpins.

NOTE:
Upper and lower kingpins, when removed, must be marked off one from the other.

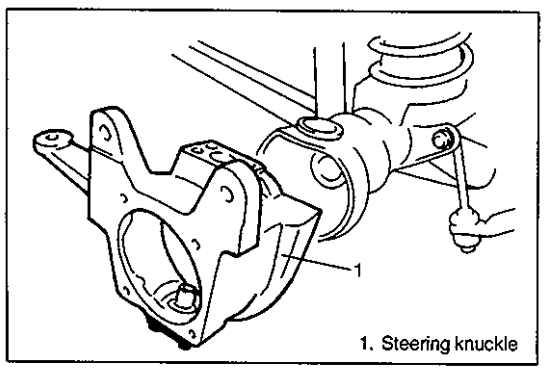

1. Steering knuckle

8) Remove steering knuckle.

NOTE:
- **When steering knuckle is pulled, lower kingpin bearing sometimes falls off. So remove bearing while pulling off the knuckle gradually.**
- **Upper and lower kingpin bearings must be also marked off one from the other.**

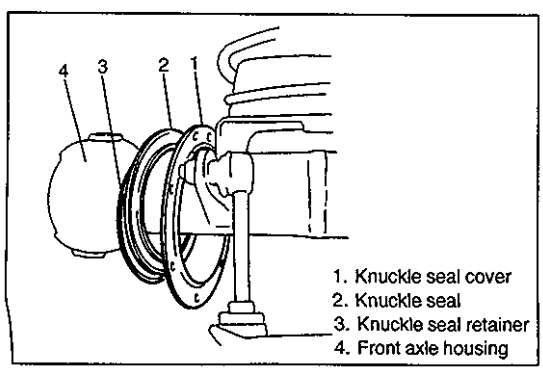

1. Knuckle seal cover
2. Knuckle seal
3. Knuckle seal retainer
4. Front axle housing

9) Remove knuckle seal cover, knuckle seal and knuckle seal retainer from front axle housing.

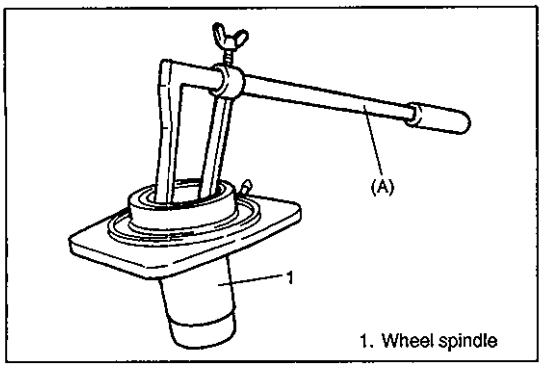

1. Wheel spindle

10) Remove spindle oil seal by using special tool.

Special Tool
(A): 09913-50121

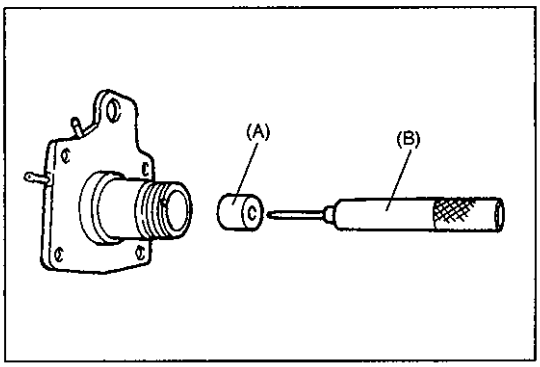

11) Remove spindle bushing by using special tools.

Special Tool
(A): 09917-88210
(B): 09916-58210

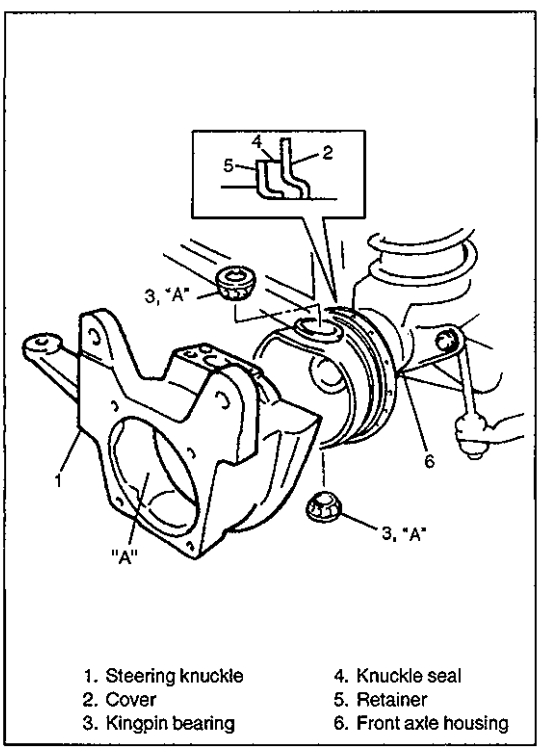

1. Steering knuckle
2. Cover
3. Kingpin bearing
4. Knuckle seal
5. Retainer
6. Front axle housing

INSTALLATION

1) Set knuckle seal cover, knuckle seal and knuckle seal retainer on front axle housing.
2) Apply grease within the knuckle. Amount of grease to be applied within the knuckle is approximately 150 g.

   "A": Grease 99000-25010

3) Apply grease to kingpin bearings and install them to front axle housing.

   NOTE:
   When reusing bearing, install bearing with sealing at the top.

   "A": Grease 99000-25010

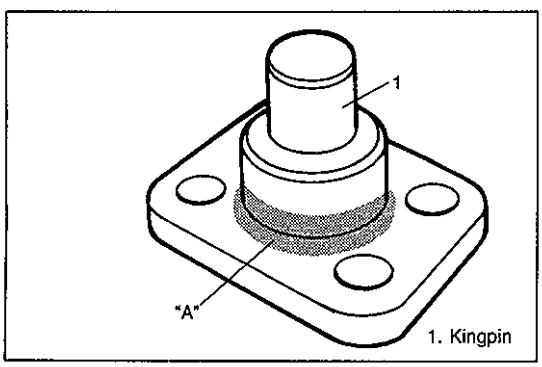

1. Kingpin

4) Apply sealant to indicated part of kingpin.

   "A": Sealant 99000-31090

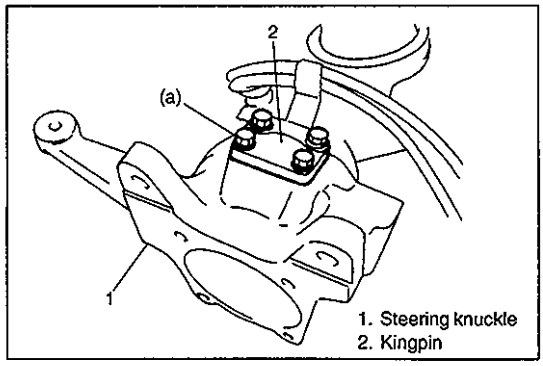

1. Steering knuckle
2. Kingpin

5) Install steering knuckle and king pins and tighten kingpin bolts to specified torque.

Tightening Torque
(a): 25 N·m (2.5 kg-m, 18.0 lb-ft)

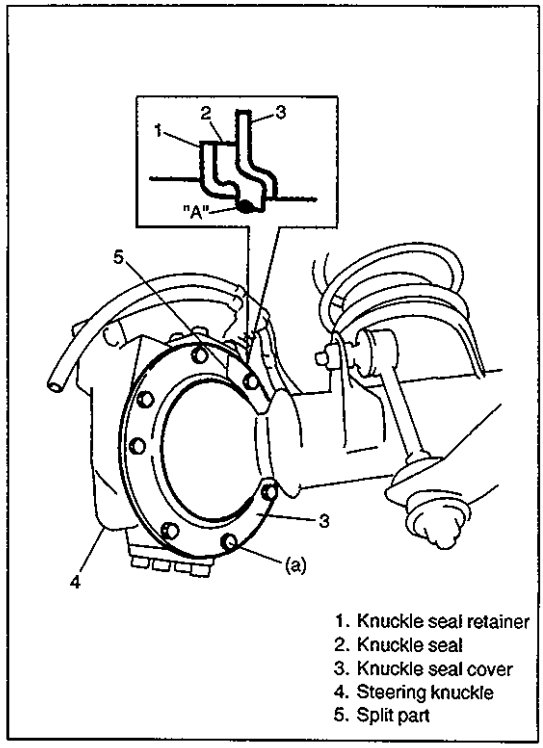

1. Knuckle seal retainer
2. Knuckle seal
3. Knuckle seal cover
4. Steering knuckle
5. Split part

6) Apply grease to all around of knuckle seal lip.

"A": Grease 99000-25010

7) Install knuckle seal retainer, knuckle seal and knuckle seal cover, tighten bolts to specified torque.

NOTE:
Install knuckle seal cover and knuckle seal retainer so that their split section comes at the top as shown in figure.

Tightening Torque
(a): 10 N·m (1.0 kg-m, 7.5 lb-ft)

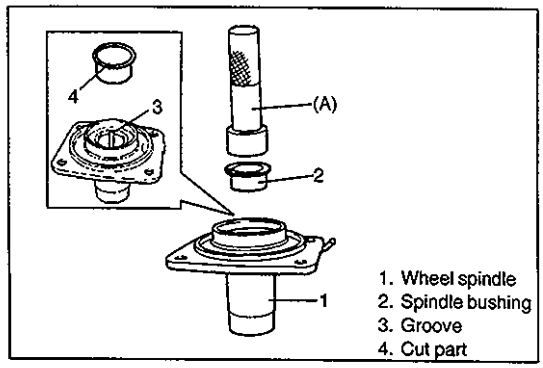

1. Wheel spindle
2. Spindle bushing
3. Groove
4. Cut part

8) Press-fit spindle bushing to wheel spindle by using special tool.
Set cut part of spindle bushing as shown in figure (opposite side of the groove of wheel spindle).

Special Tool
(A): 09922-55131

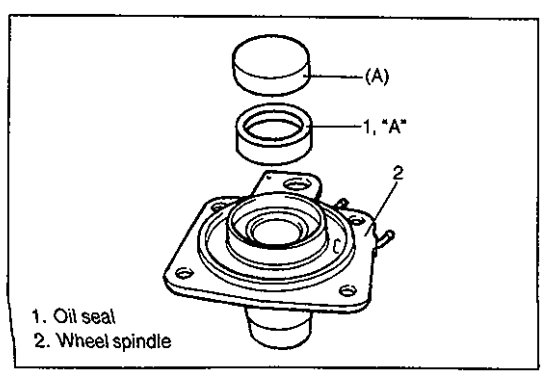

1. Oil seal
2. Wheel spindle

9) Press-fit spindle oil seal until it becomes flush with wheel spindle surface by using special tool, and then apply grease to its lip.

Special Tool
(A): 09944-66020

10) Apply grease to spindle oil seal lip.

"A": Grease 99000-25010

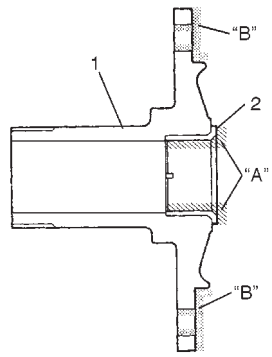

1. Wheel spindle
2. Spindle bushing

11) Apply grease to spindle bushing inside surface, flange and shaft (for 4WD) of wheel spindle.

"A": Grease 99000-25010

CAUTION:
As this hole is a part of the passage of the vacuum that activates the air locking hub, if it is clogged with grease, the air locking hub cannot be locked or unlocked.
Therefore, be careful not to apply too much grease to avoid clogging the vacuum passage.

12) Install wheel spindle to knuckle, coat their mating surface with sealant.

"B": Sealant 99000-31110 or 99000-31090

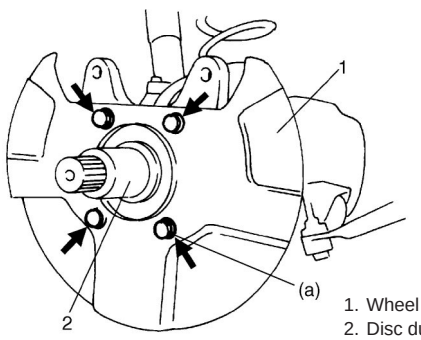

1. Wheel spindle
2. Disc dust cover

13) Install wheel spindle and disc dust cover to steering knuckle. Tighten wheel spindle bolts to specified torque.

Tightening Torque
(a): 50 N·m (5.0 kg-m, 36.5 lb-ft)

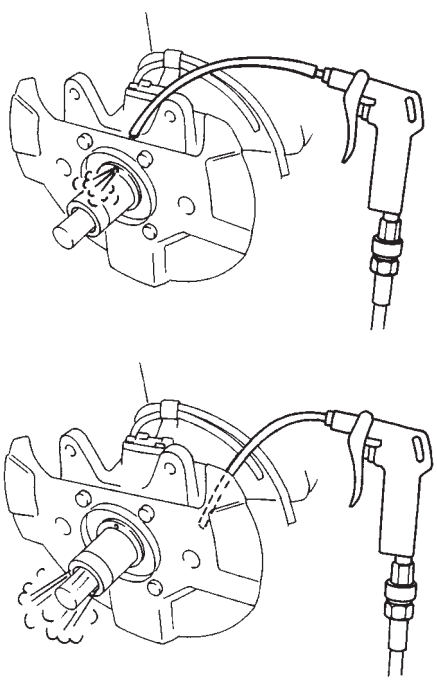

14) Blow air into pipes at the top and the front of wheel spindle and check that it comes out of the hole as shown in figure (for 4WD).

CAUTION:
As this hole is a part of the passage of the vacuum that activates the air locking hub, if it is clogged with grease, the air locking hub cannot be locked or unlocked.
Therefore, be careful not to apply too much grease to avoid clogging the vacuum passage.

15) Connect spindle vacuum hoses to wheel spindle (for 4WD).
16) Connect tie rod and drag rod to steering knuckle, refer to TIE ROD AND DRAG ROD INSTALLATION of Section 3B.
17) Install wheel hub assembly, refer to steps 5) to 16') of WHEEL HUB INSTALLATION in this section.
18) Install wheel and tighten wheel nuts to specified torque, refer to TIGHTENING TORQUE SPECIFICATIONS in this section.
19) Lower hoist.

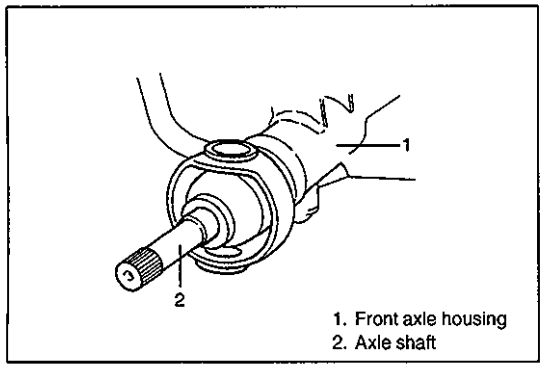

1. Front axle housing
2. Axle shaft

FRONT AXLE SHAFT/OIL SEAL/KINGPIN BEARING OUTER RACE

REMOVAL

1) Hoist vehicle.
2) Drain differential gear oil from front axle housing by loosing drain plug (for 4WD).
3) Remove steering knuckle. For details, refer to steps 2) to 8) of STEERING KNUCKLE/WHEEL SPINDLE REMOVAL in this section.
4) Draw out axle shaft.

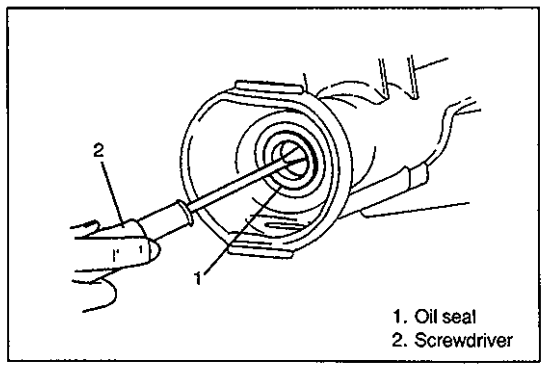

1. Oil seal
2. Screwdriver

5) Remove oil seal from axle housing by using screwdriver (for 4WD).

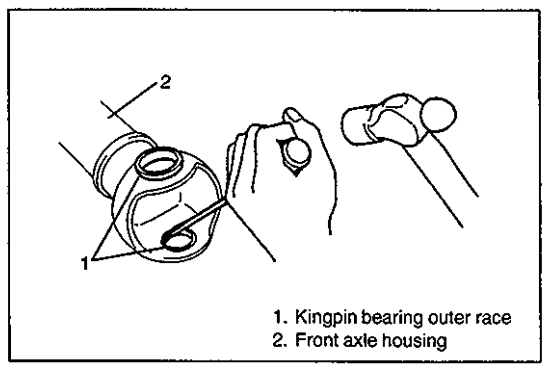

1. Kingpin bearing outer race
2. Front axle housing

6) Drain out kingpin bearing outer race from front axle housing by using screwdriver and hammer.

INSTALLATION

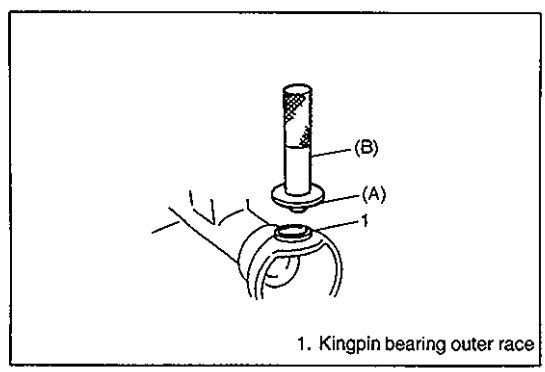

1. Kingpin bearing outer race

1) Install kingpin bearing outer race to front axle housing by using special tools.

Special Tool
(A): 09944-68510
(B): 09924-74510

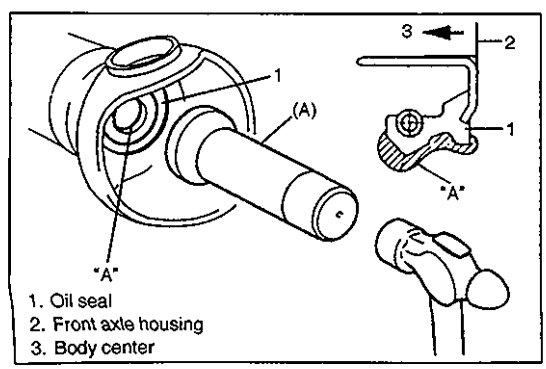

1. Oil seal
2. Front axle housing
3. Body center

2) Press-fit oil seal until it becomes flush with inner surface of front axle housing by using special tool.

Special Tool
(A): 09951-76010

3) Apply grease to oil seal lip.

"A": Grease 99000-25010

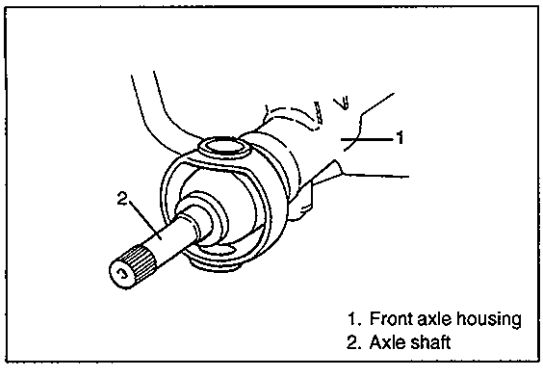

1. Front axle housing
2. Axle shaft

4) Install axle shaft to front axle housing (for 4WD).

5) Install knuckle to front axle housing. For details, refer to steps 1) to 7) and 10) to 18) of STEERING KNUCKLE/WHEEL SPINDLE INSTALLATION in this section.
6) Refill front axle (differential) housing with new specified gear oil (for 4WD). Refer to Section 7E for refill.
7) After servicing, check that no oil leakage exists.

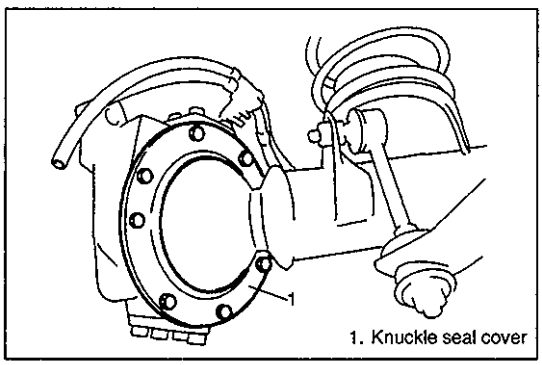

1. Knuckle seal cover

STEERING KNUCKLE SEAL

REMOVAL

1) Hoist vehicle.
2) Remove knuckle seal cover bolts.
3) Cut oil seal in place with scissors or knife, and take it off.

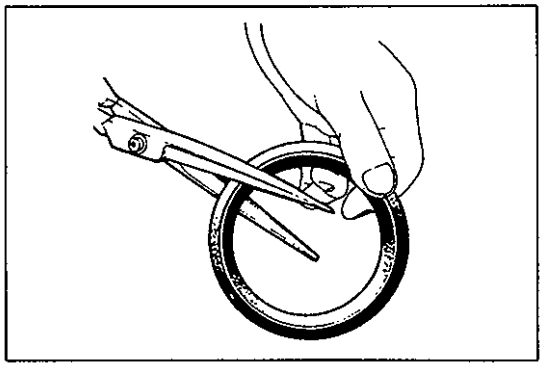

INSTALLATION

1) Cut replacement oil seal at one place with scissors or a knife.

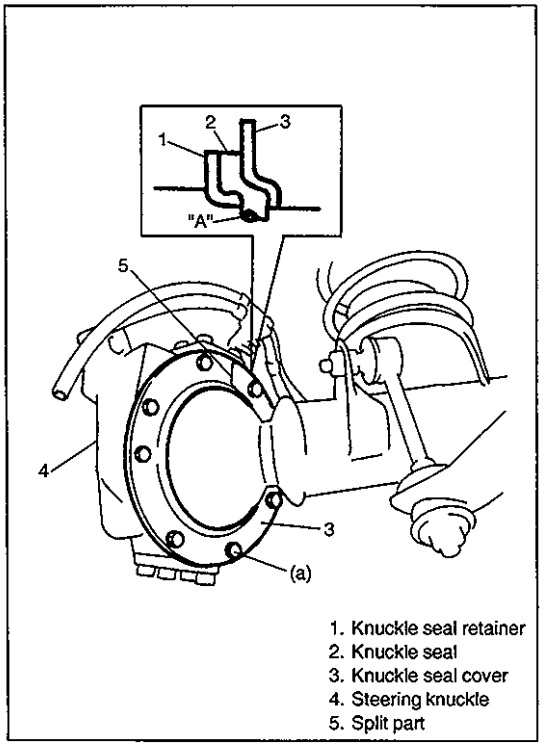

1. Knuckle seal retainer
2. Knuckle seal
3. Knuckle seal cover
4. Steering knuckle
5. Split part

2) Apply grease to oil seal lip.

"A": Grease 99000-25010

3) Install oil seal retainer, oil seal and oil seal cover to steering knuckle.
Tighten bolts to specified Torque

NOTE:
Install the seal in oil seal retainer, bringing the split part to top side and locating it about 30° off the matching face of oil seal retainer.

Tightening Torque
(a): 10 N·m (1.0 kg-m, 7.5 lb-ft)

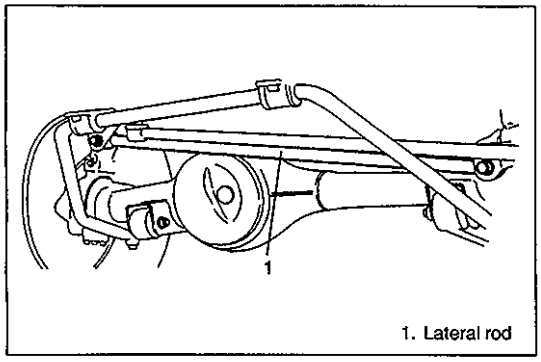

1. Lateral rod

LATERAL ROD

REMOVAL

1) Hoist vehicle.
2) Remove mounting bolts of lateral rod.
3) Remove lateral rod.

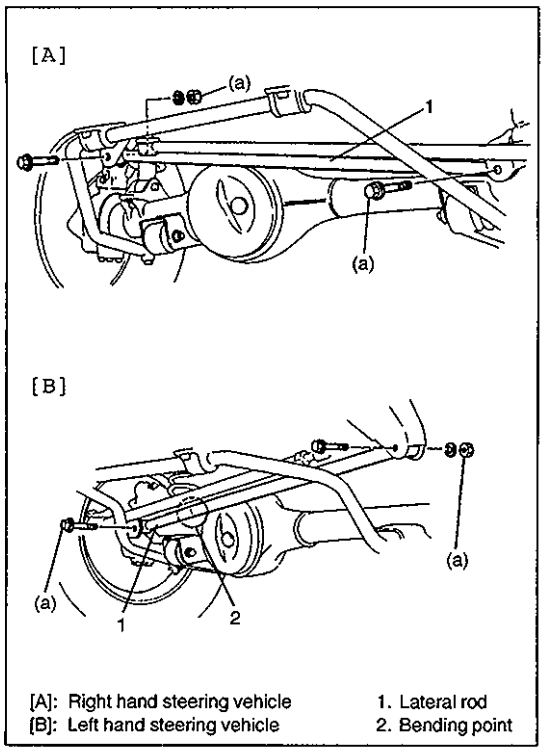

[A]: Right hand steering vehicle
[B]: Left hand steering vehicle
1. Lateral rod
2. Bending point

INSTALLATION

1) Install lateral rod to vehicle body and front axle housing, referring to figure for proper installing direction of bolts.
   Bolt and nut should not be tightened.

   NOTE:
   For left hand steering vehicle, install lateral rod with its bending point placed to right side of vehicle.

2) Lower hoist and with vehicle in non-loaded condition, tighten bolt and nut of lateral rod to specified torque.

   Tightening Torque
   (a): 90 N·m (9.0 kg-m, 65.0 lb-ft)

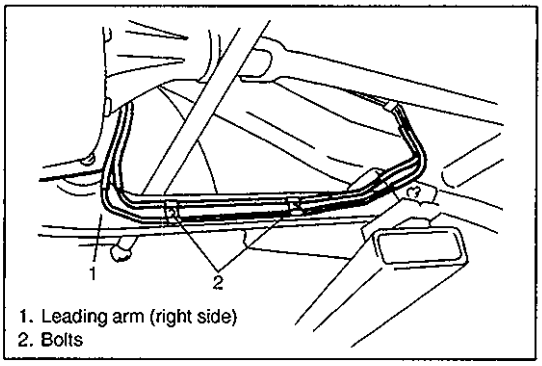

1. Leading arm (right side)
2. Bolts

LEADING ARM

REMOVAL

1) Hoist vehicle.
2) Remove air locking hub vacuum pipe clamp bolts (for 4WD).

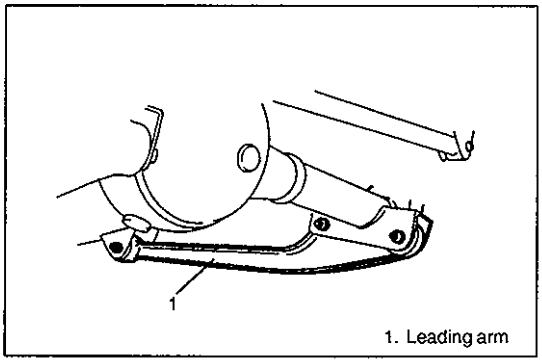

1. Leading arm

3) Support front axle housing by using floor jack.
4) Remove shock absorber lower mounting bolt, refer to FRONT SHOCK ABSORBER REMOVAL in this section.
5) Remove mounting bolts and leading arm.

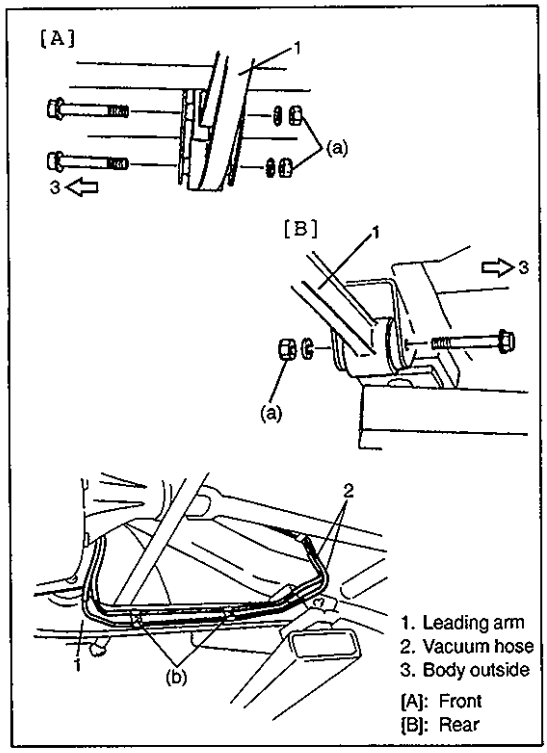

INSTALLATION

1) Install leading arm to vehicle body and axle housing, referring to figure for proper installing direction of bolts.
   Nuts should not be tightened.
2) Install shock absorber lower mounting bolt, refer to FRONT SHOCK ABSORBER INSTALLATION in this section.
3) Install air locking hub vacuum pipe clamp bolts and tighten them to specified torque (for 4WD).

   Tightening Torque
   (b): 5.5 N·m (0.55 kg-m, 4.0 lb-ft)

4) Lower hoist and with vehicle in non-loaded condition, tighten nuts of leading arm to specified torque.

   Tightening Torque
   (a): 90 N·m (9.0 kg-m, 65.0 lb-ft)

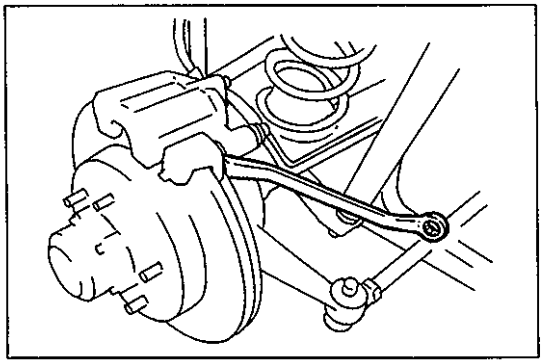

FRONT AXLE HOUSING

REMOVAL

1) Hoist vehicle.
2) Remove front wheels.
3) Drain front differential gear oil (for 4WD).
4) Remove caliper carrier bolts (R&L) and suspend caliper.

CAUTION:
During removal, be careful not to damage brake flexible hose and not to depress brake pedal.

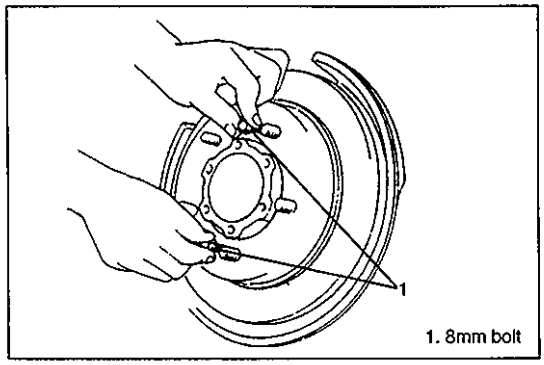

5) Remove right and left brake disc.

NOTE:
If brake disc can not be removed by hand, use 8mm bolts.

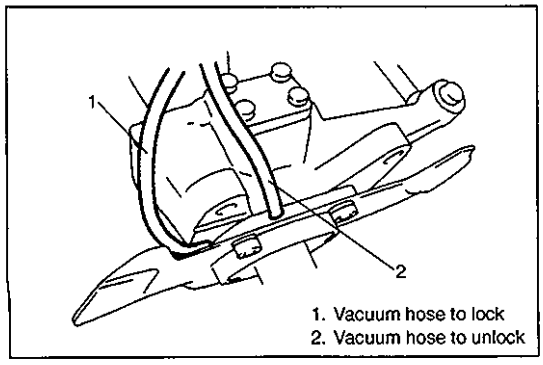

6) Remove wheel speed sensor (if equipped with ABS).
7) Disconnect spindle vacuum hoses from wheel spindle (for 4WD).

CAUTION:
Give match mark to spindle vacuum hose and wheel spindle before removal.

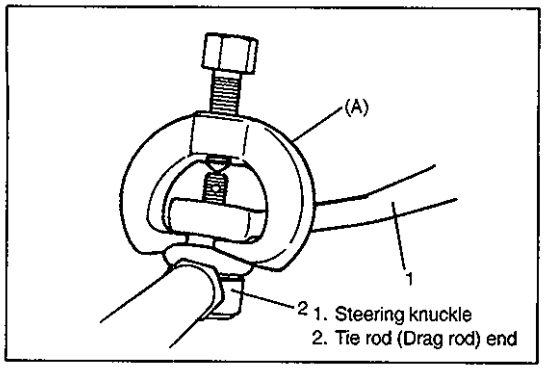

8) Remove tie rod (and drag rod) end nuts and disconnect tie rod (and drag rod) ends from knuckle arm (R&L) with special tool.

Special Tool
(A): 09913-65210

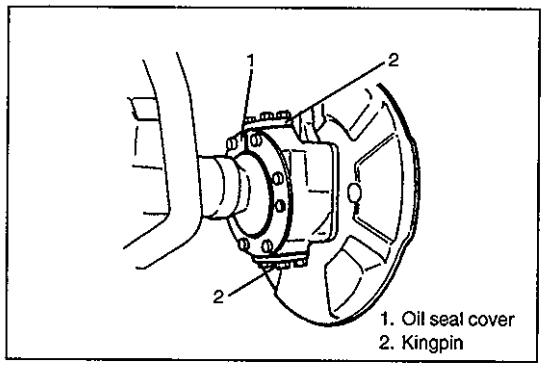

9) Remove knuckle seal cover bolts, take off knuckle seal cover, knuckle seal and knuckle seal retainer.
10) Remove upper and lower kingpins from steering knuckle.

NOTE:
The removed upper and lower kingpins must be kept separated so as to prevent an error when putting them back in their place in reassembly.

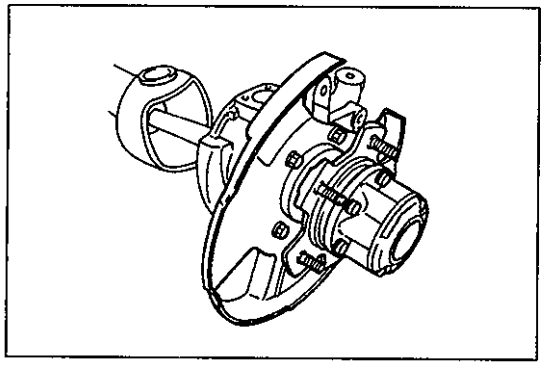

11) Draw out right and left axle shafts with knuckle and hub assembly (for 4WD).

NOTE:
At this time, lower kingpin bearing sometimes falls off. So remove bearing while pulling off knuckle gradually.

11') Remove knuckle with hub assembly from axle housing (for 2WD).

NOTE:
At this time, lower kingpin bearing sometimes falls off. So remove bearing while pulling off knuckle gradually.

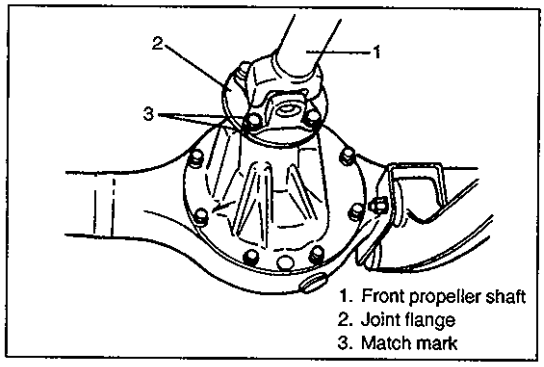

12) Before removing front propeller shaft, give match marks on joint flange and front propeller shaft as shown (for 4WD).
13) Remove front differential from front axle housing (for 4WD).

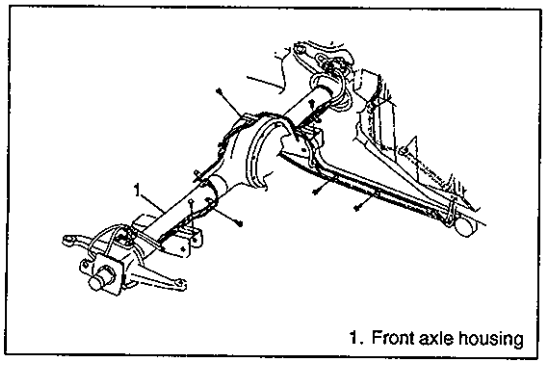

14) Remove air locking hub vacuum pipe from axle housing (for 4WD).

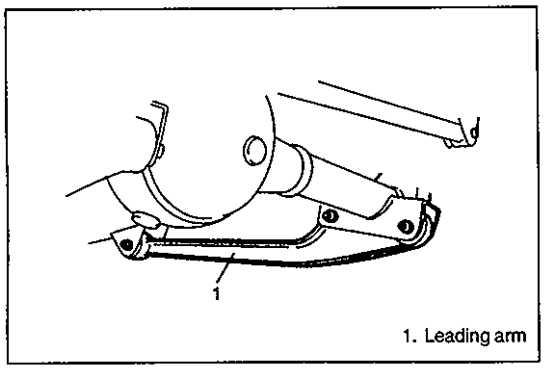

1. Leading arm

15) Support front axle housing by using floor jack.
16) Remove lateral rod, refer to LATERAL ROD REMOVAL in this section.
17) Remove stabilizer bar, refer to STABILIZER BAR REMOVAL in this section.
18) Loosen mounting nuts of leading arm but don't remove bolts.

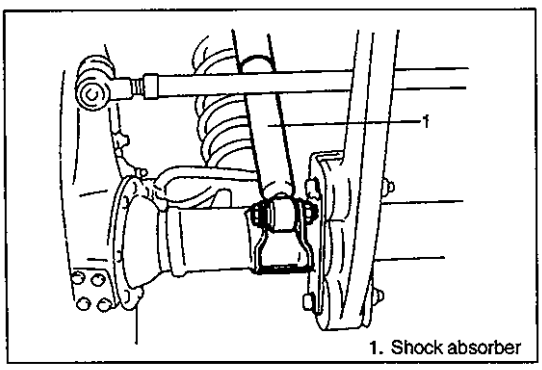

1. Shock absorber

19) Lower floor jack until tension of suspension coil spring becomes a little loose and remove lower mounting bolt of shock absorber.

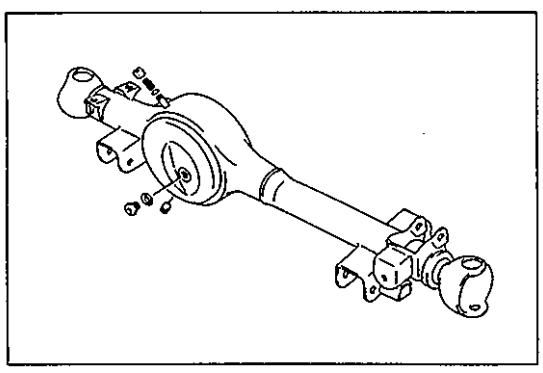

20) Remove front mounting bolts of leading arm.
21) Lower front axle housing gradually.
22) Remove axle housing.

INSTALLATION

1) Place rear axle housing on floor jack. Then install leading arm front mounting bolts (right & left) in proper direction as shown. At this time, mount nuts but don't tighten them.

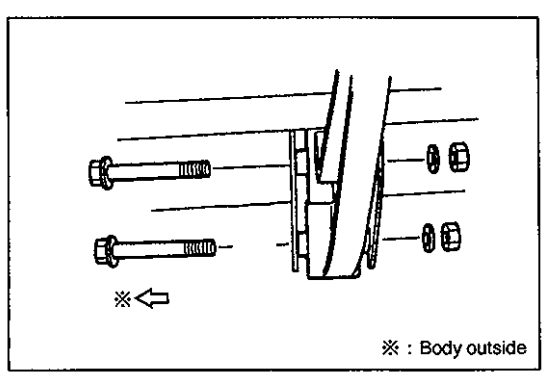

※ : Body outside

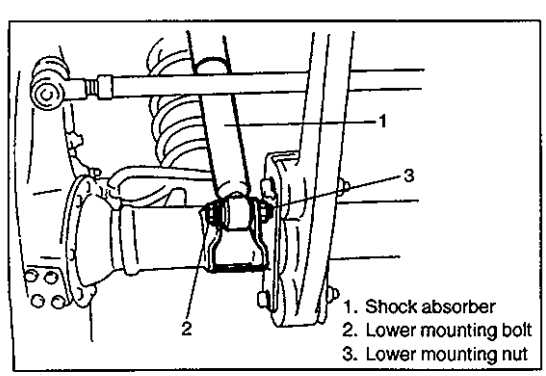

1. Shock absorber
2. Lower mounting bolt
3. Lower mounting nut

2) Install lower part of shock absorber to right and left sides of axle housing and install bolts in proper direction as shown in figure. At this time, mount nuts but don't tighten them.

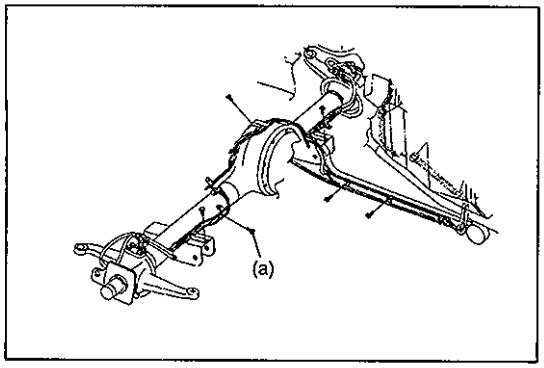

3) Install air locking hub vacuum pipe and tighten clamp bolts to specified torque (for 4WD).

Tightening Torque
(a): 5.5 N·m (0.55 kg-m, 4.0 lb-ft)

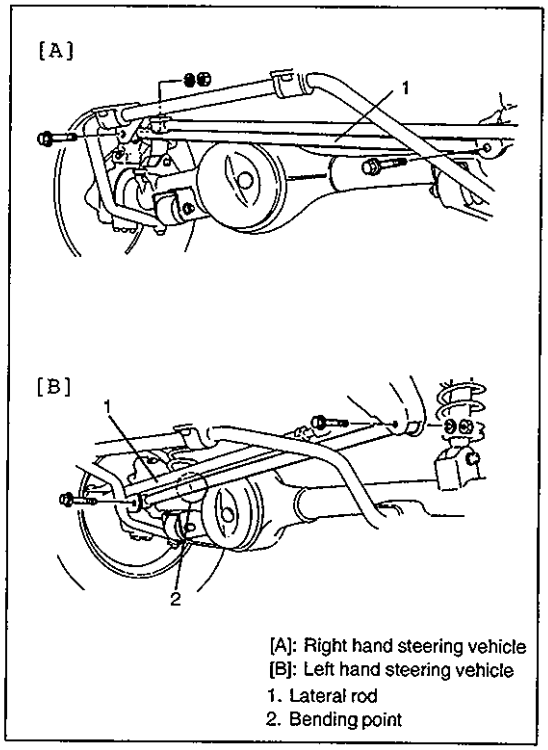

[A]: Right hand steering vehicle
[B]: Left hand steering vehicle
1. Lateral rod
2. Bending point

4) Install stabilizer bar, refer to STABILIZER BAR INSTALLATION in this section.
5) Install lateral rod to vehicle body and axle housing.
Install bolts in proper direction as shown in figure.
At this time, mount bolt and nut but don't tighten them.

NOTE:
For left hand steering vehicle, install lateral rod with its bending point placed to right side of vehicle.

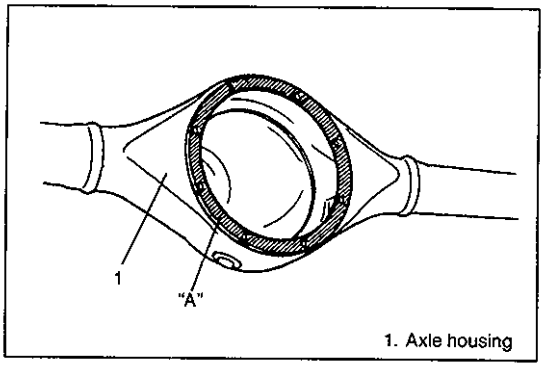

1. Axle housing

6) Clean mating surfaces of axle housing and differential carrier and apply sealant to housing side (for 4WD).

"A": Sealant 99000-31110

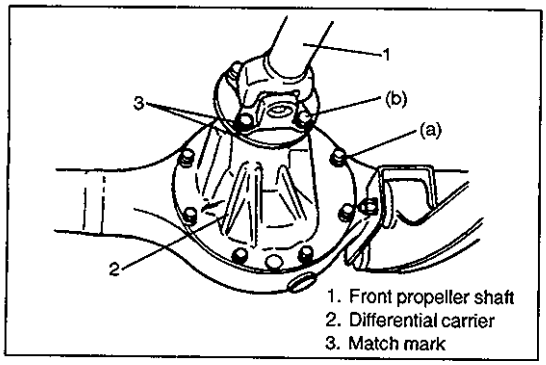

1. Front propeller shaft
2. Differential carrier
3. Match mark

7) Install differential carrier assembly to axle housing and tighten carrier bolts to specified torque (for 4WD).

Tightening Torque
(a): 23 N·m (2.3 kg-m, 17.0 lb-ft)

8) Install front propeller shaft to joint flange aligning match marks and torque flange bolts to specification (for 4WD).

Tightening Torque
(b): 50 N·m (5.0 kg-m, 36.5 lb-ft)

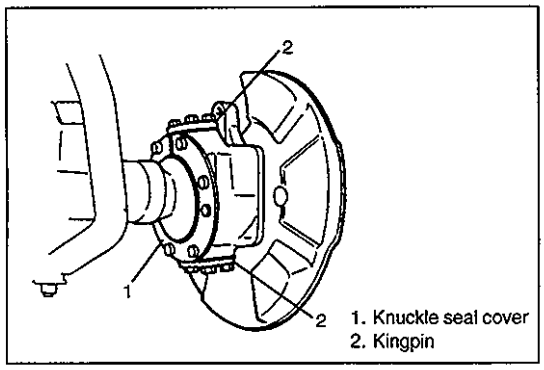

1. Knuckle seal cover
2. Kingpin

9) Install right and left axle shafts to axle housing (for 4WD). Install knuckle to axle housing (for 2WD).

NOTE:
Place knuckle seal and retainer in axle housing before installing axle shaft (knuckle), using care for installation direction of knuckle seal.

10) Install kingpins and knuckle seal cover to steering knuckle (R&L), refer to STEERING KNUCKLE/WHEEL SPINDLE INSTALLATION in this section.

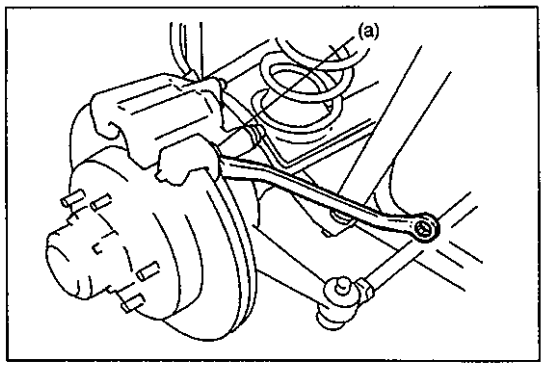

11) Install right and left brake disc and caliper assembly. Tighten carrier bolts to specified torque.

Tightening Torque
(a): 85 N·m (8.5 kg-m, 61.5 lb-ft)

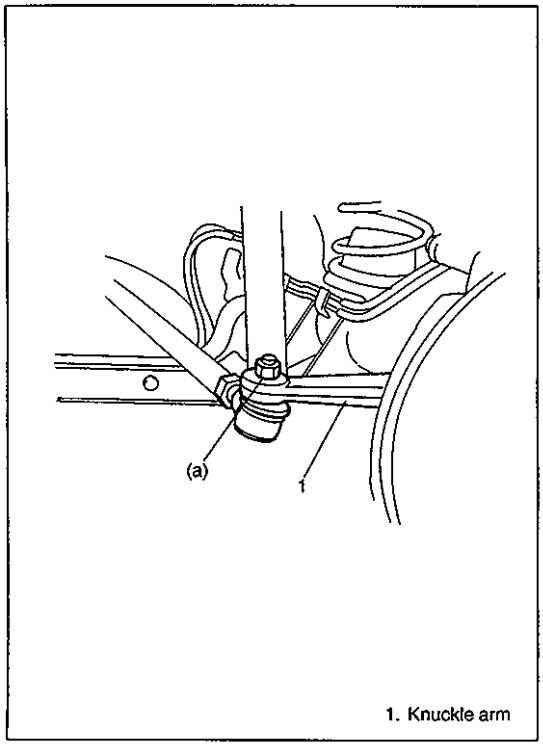

1. Knuckle arm

12) Connect spindle vacuum hoses to wheel spindle (for 4WD), while aligning the match mark.
13) Install ABS wheel sensor to steering knuckle (if equipped with ABS).
14) Install tie rod ends and drag rod end to knuckle arm (R&L). Tighten new nuts to specified torque.

NOTE:
To prevent ball stud from being rotated while tightening tie rod end nut, tighten Nut (M12×1.25) to about 20 N·m (2.0 kg-m, 14.5 lb-ft) and remove it. Then tighten new nut to specified torque.

Tightening Torque
(a): 40 N·m (4.0 kg-m, 29.0 lb-ft)

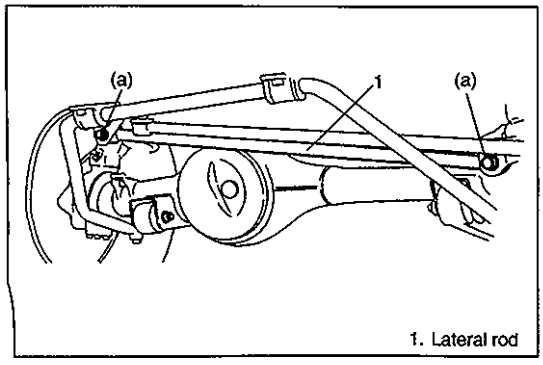

1. Lateral rod

15) Install wheels and tighten wheel nuts to specified torque, refer to TIGHTENING TORQUE SPECIFICATIONS in this section. Lower hoist.
16) Tighten lateral rod mounting bolt and nut to specified torque.

NOTE:
When tightening bolt and nut, be sure that vehicle is off hoist and in non loaded condition.

Tightening Torque
(a): 90 N·m (9.0 kg-m, 65.0 lb-ft)

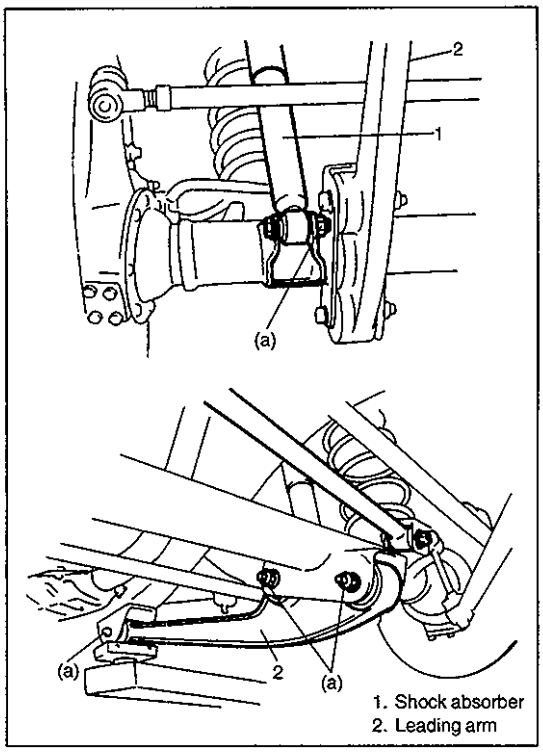

1. Shock absorber
2. Leading arm

17) Tighten right and left shock absorber lower mounting nuts and leading arm mounting nuts to specified torque.

NOTE:
When tightening these nuts, be sure that vehicle is off hoist and in non loaded condition.

Tightening Torque
(a): 90 N·m (9.0 kg-m, 65.0 lb-ft)

18) Refill front axle (differential) housing with new specified gear oil. Refer to Section 7E for refill.
19) Confirm front end (wheel) alignment referring to Section 3A.

TIGHTENING TORQUE SPECIFICATIONS

Fastening Parts	Tightening Torque		
	N·m	kg-m	lb-ft
Stabilizer mount bracket bolt	20	2.0	14.5
Stabilizer ball joint nut	50	5.0	36.5
Shock absorber lock nut	29	2.9	21.0
Shock absorber lower nut	90	9.0	65.0
Brake caliper carrier bolt	85	8.5	61.5
Wheel bearing lock nut	220	22.0	160.0
Wheel bearing lock washer screw	1.5	0.15	1.0
Air locking hub bolt	48	4.8	35.0
Wheel spindle bolt	50	5.0	36.5
Kingpin bolt	25	2.5	18.0
Knuckle seal cover bolt	10	1.0	7.5
Tie-rod end nut	43	4.3	31.5
Drag-rod end nut			
Lateral rod bolt and nut	90	9.0	65.0
Leading arm nut			
Front differential carrier bolt	23	2.3	17.0
Front propeller shaft flange bolt	50	5.0	36.5
Wheel nut	95	9.5	69.0
Vacuum pipe clamp bolt	5.5	0.55	4.0

REQUIRED SERVICE MATERIALS

MATERIALS	RECOMMENDED SUZUKI PRODUCT	USE
Lithium grease	SUZUKI SUPER GREASE (A) (99000-25010)	Knuckle seal/axle shaft oil seal Recess of wheel spindles Wheel hub oil seal Wheel bearing Spindle thrust washer Spindle bush (inside and flange part) Spindle oil seal Kingpin bearing Axle shaft bearing
Sealant	SUZUKI BOND NO. 1215 (99000-31110)	Mating surfaces of wheel spindle and knuckle Mating surface of differential carrier and axle housing
Sealing compound	SUZUKI SEALING COMPOUND 366E (99000-31090)	Mating surface of wheel spindle and knuckle Kingpin Mating surfaces of hub cap and wheel hub

SPECIAL TOOLS

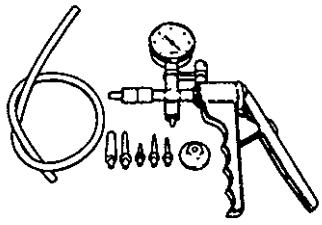 09917-47910 Vacuum pump gauge	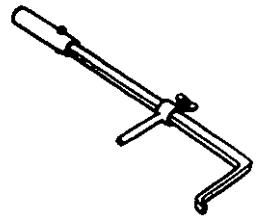 09913-50121 Oil seal remover	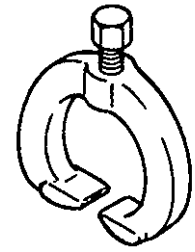 09913-65210 Tie rod end remover	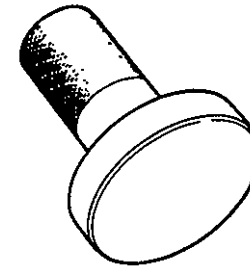 09913-75520 Bearing installer
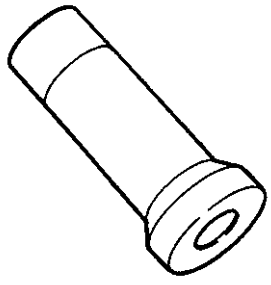 09951-76010 Bearing installer	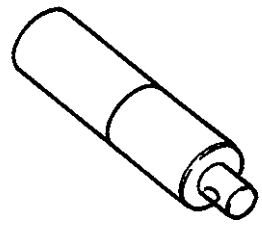 09924-74510 Bearing installer handle	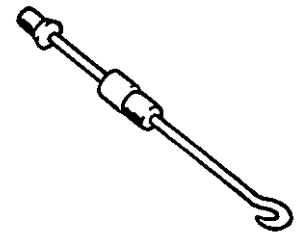 09942-15510 Sliding hammer	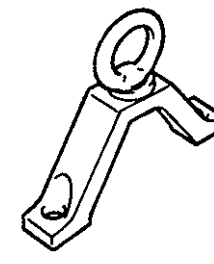 09943-35511 Brake drum remover
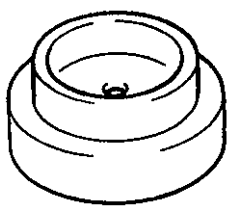 09944-66010 Wheel hub/knuckle oil seal installer	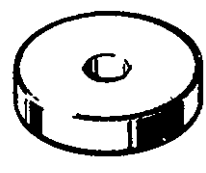 09944-68510 Bearing installer attachment	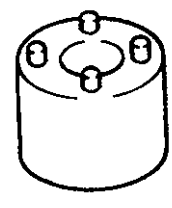 09951-16050 Wheel bearing tightening tool	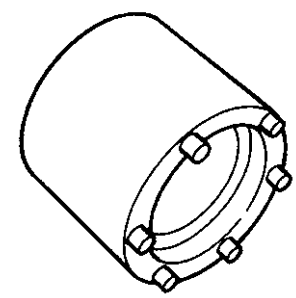 09944-77010 Ring nut wrench
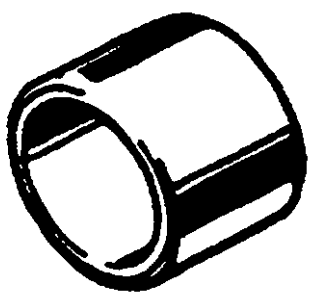 09944-78210 Bearing installer support	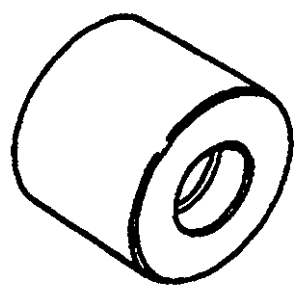 09917-88210 Valve guide installer attachment	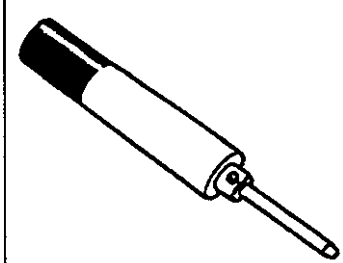 09916-58210 Valve guide installer handle	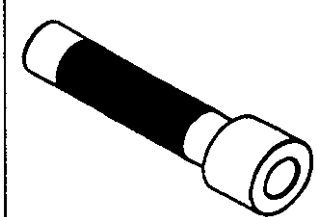 09922-55131 Bearing installer

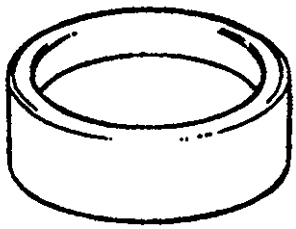

09944-66020
Bearing installer

SECTION 3E

REAR SUSPENSION

WARNING:
When hoisting vehicle, be sure to select the lifting point suitable for the service work referring to SECTION 0A.

NOTE:

- **All suspension fasteners are an important attaching part in that it could affect the performance of vital parts and systems, and/or could result in major repair expense. They must be replaced with one of the same part number or with an equivalent part if replacement becomes necessary. Do not use a replacement part of lesser quality or substitute design. Torque values must be used as specified during reassembly to assure proper retention of this part.**
- **Never attempt to heat, quench or straighten any suspension part. Replace it with a new part, or damage to the part may result.**

CONTENTS

GENERAL DESCRIPTION 3E- 2
DIAGNOSIS 3E- 3
Diagnosis Table 3E- 3
Rear Shock Absorber Check 3E- 3
Trailing Arm, Lateral Rod, Axle Housing And Coil Spring Check 3E- 3
Trailing Arm And Lateral Rod Bush Check .. 3E- 3
Rear Suspension Fasteners 3E- 3
Bearing Retainer And Axle Shaft Oil Seal Check 3E- 4
Bump Stopper And Spring Rubber Seat Check 3E- 4
Wheel Disc, Nut & Bearing Check 3E- 4
ON-VEHICLE SERVICE 3E- 5
Rear Shock Absorber 3E- 5
Coil Spring 3E- 6
Bump Stopper 3E- 8
Lateral Rod 3E- 8
Trailing Arm 3E- 9
Rear Axle Shaft and Wheel Bearing 3E-10
Rear Axle Shaft Inner Oil Seal 3E-14
Rear Axle Housing 3E-15
TIGHTENING TORQUE SPECIFICATIONS 3E-19
REQUIRED SERVICE MATERIALS 3E-19
SPECIAL TOOLS 3E-20

GENERAL DESCRIPTION

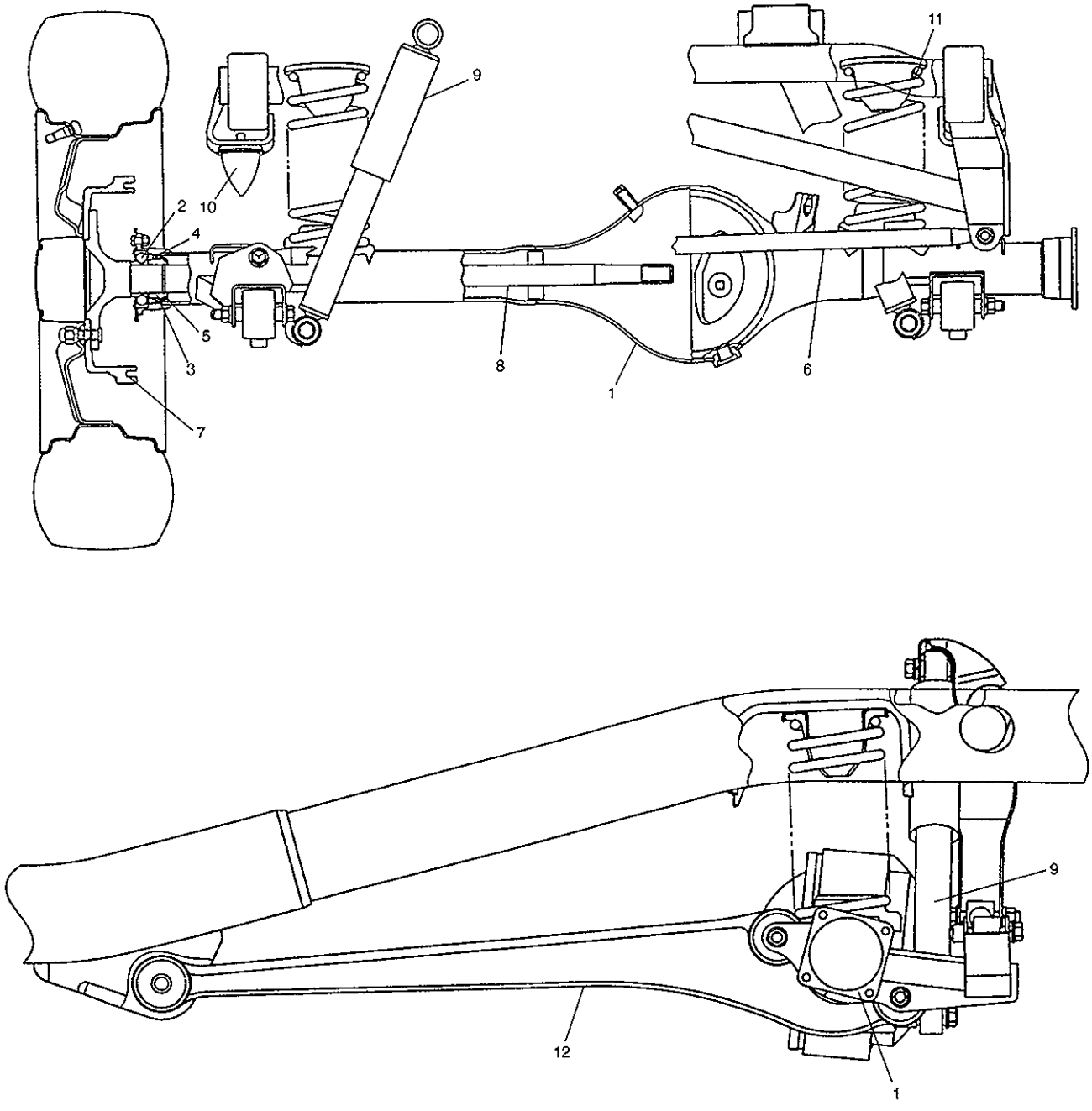

1. Rear axle housing
2. Rear wheel bearing
3. Bearing retainer ring
4. Bearing oil seal
5. Oil seal protector
6. Lateral rod
7. Brake drum
8. Rear axle shaft
9. Shock absorber
10. Bump stopper
11. Coil spring
12. Trailing arm

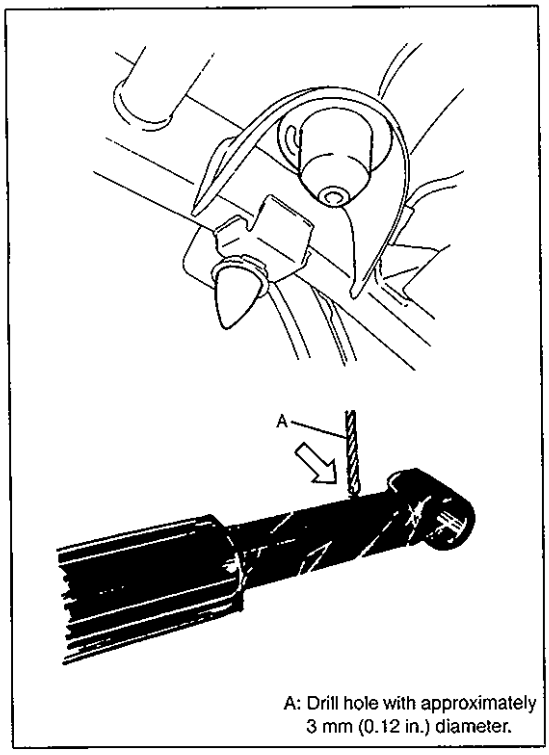

A: Drill hole with approximately 3 mm (0.12 in.) diameter.

DIAGNOSIS

DIAGNOSIS TABLE

Refer to Section 3.

REAR SHOCK ABSORBER CHECK

- Inspect for deformation or damage.
- Inspect bushings for wear or damage.
- Inspect for evidence of oil leakage.

Replace any defective part.

WARNING:
When handling rear shock absorber in which high-pressure gas is sealed, make sure to observe the following precautions.
- **Don't disassemble it.**
- **Don't put it into the fire.**
- **Don't store it where it gets hot.**
- **Before disposing it, be sure to drill a hole in it where shown by an arrow in the figure and let gas and oil out. Lay it down sideways for this work.**
- **The gas itself is harmless but it may issue out of the hole together with chips generated by the drill. Therefore, be sure to wear goggle.**

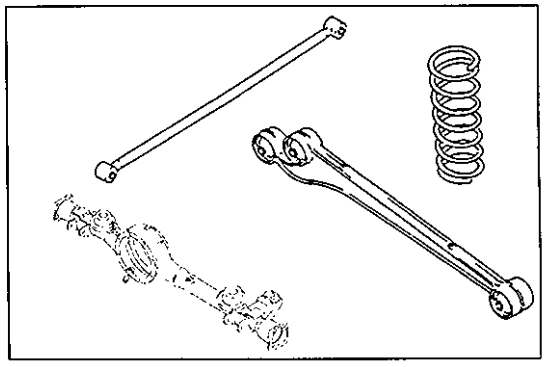

TRAILING ARM, LATERAL ROD, AXLE HOUSING AND COIL SPRING CHECK

Inspect for cracks, deformation or damage.

Replace any defective part.

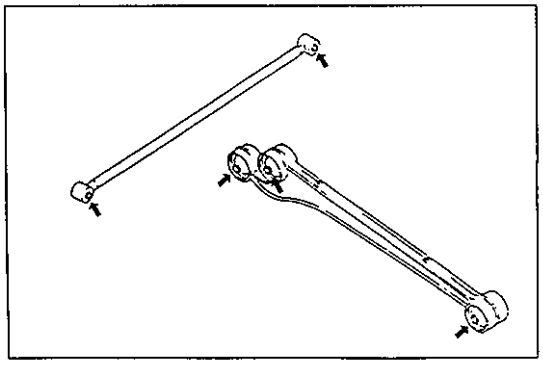

TRAILING ARM AND LATERAL ROD BUSH CHECK

Inspect for wear and breakage. If found defective, replace.

REAR SUSPENSION FASTENERS

Check each bolt and nut fastening suspension parts for tightness. Tighten loose one, if any, to specified torque, referring to TIGHTENING TORQUE SPECIFICATIONS of this section.

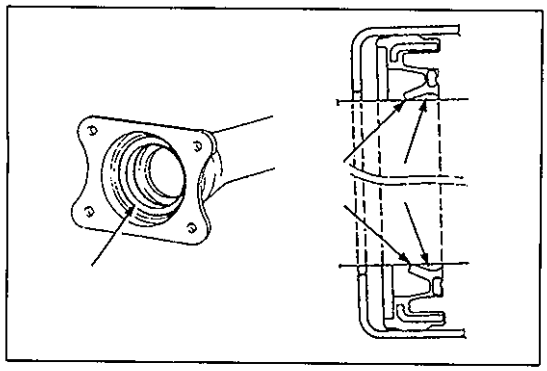

BEARING RETAINER AND AXLE SHAFT OIL SEAL CHECK

- When brake drum has been removed, check inside of brake drum for gear oil leakage.
- Also, check backside of brake back plate for oil leakage.
  If oil leakage is found, replace defective oil seal.
- Whenever it is possible to check oil seal during disassembly, check its lip for wear.
  If oil leakage or worn lip is found, replace defective oil seal.

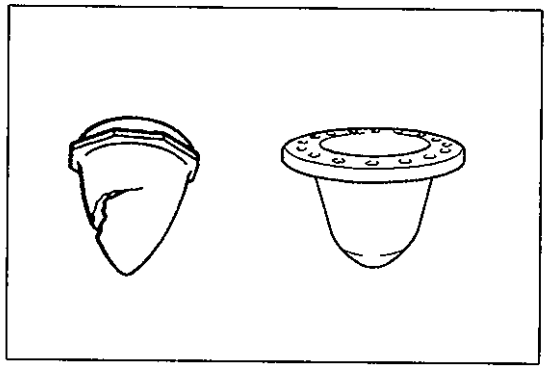

BUMP STOPPER AND SPRING RUBBER SEAT CHECK

Inspect for wear and breakage. If found defective, replace.

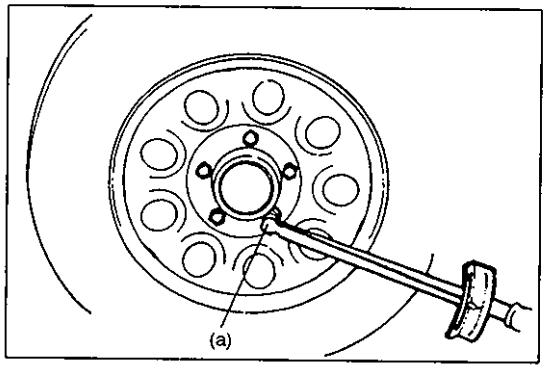

WHEEL DISC, NUT & BEARING CHECK

- Inspect each wheel disc for dents, distortion and cracks. A disc in badly damaged condition must be replaced.
- Check wheel hub nuts for tightness and, as necessary, retighten to specification.

Tightening Torque
(a): 95 N·m (9.5 kg-m, 69.0 lb-ft)

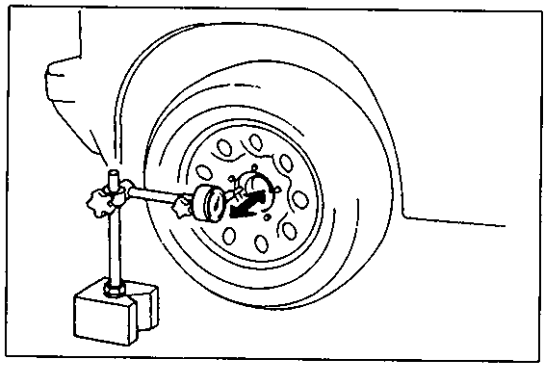

- Check wheel bearings for wear. When measuring thrust play, apply a dial gauge to axle shaft center after removing wheel center cap from wheel disc.

Thrust play limit	Rear	0.8 mm (0.03 in.)

When measurement exceeds limit, replace bearing.

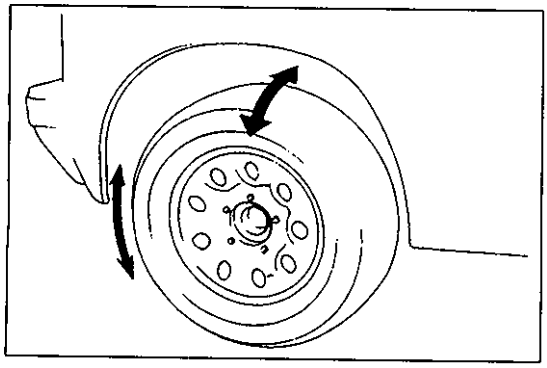

- By rotating wheel actually, check wheel bearing for noise and smooth rotation. If it is defective, replace bearing.

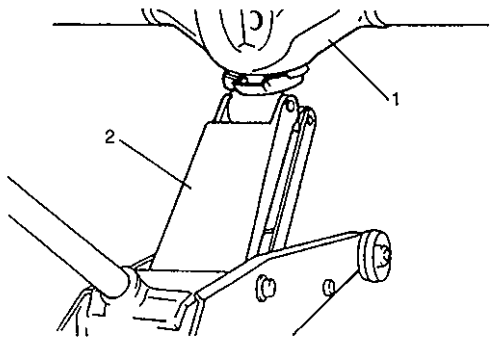

1. Rear axle housing
2. Floor jack

ON-VEHICLE SERVICE

REAR SHOCK ABSORBER

WARNING:
When discarding shock absorber, be sure to refer to instructions in "Diagnosis" section for proper procedure as it is gas sealed type.

The shock absorber is non-adjustable, non-refillable, and cannot be disassembled. The only service the shock absorber requires is replacement when it has lost its resistance, is damaged, or leaking fluid.

REMOVAL

1) Hoist vehicle.
2) Support rear axle housing by using floor jack to prevent it from lowering.

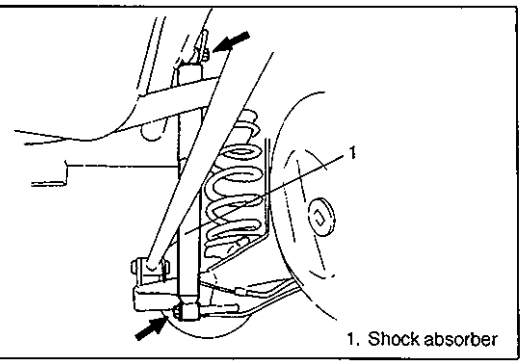

1. Shock absorber

3) Remove upper mounting bolt.
4) Remove lower mounting bolt.
5) Remove shock absorber.

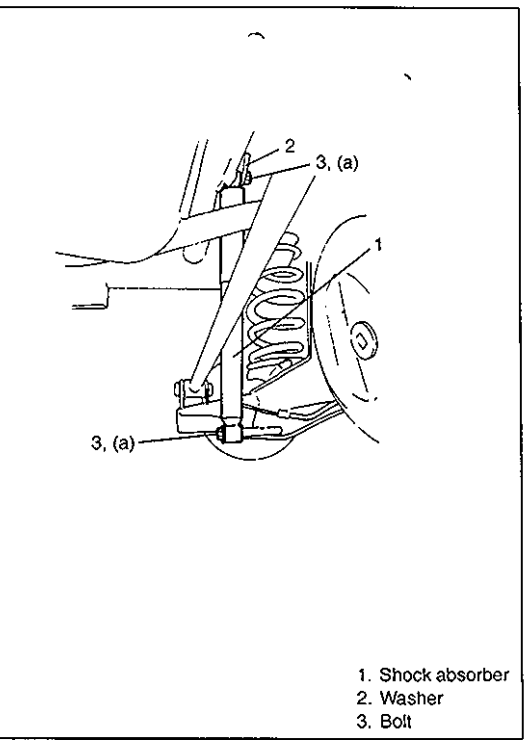

1. Shock absorber
2. Washer
3. Bolt

INSTALLATION

1) Install shock absorber, refer to figure for proper installing direction of washer and bush.
   Bolt and nut should not be tightened.
2) Remove floor jack.
3) Lower hoist.
4) Tighten shock absorber bolt and nut to specified torque.

NOTE:
Tighten lower bolt with vehicle off hoist and in non-loaded condition.

Tightening Torque
(a): 85 N·m (8.5 kg-m, 61.5 lb-ft)

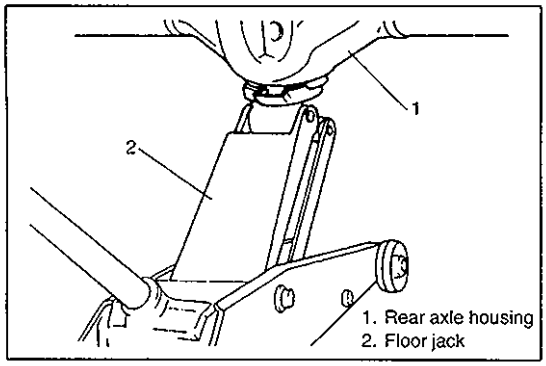

COIL SPRING

REMOVAL

1) Hoist vehicle and remove wheel.
2) Support rear axle housing by using floor jack.

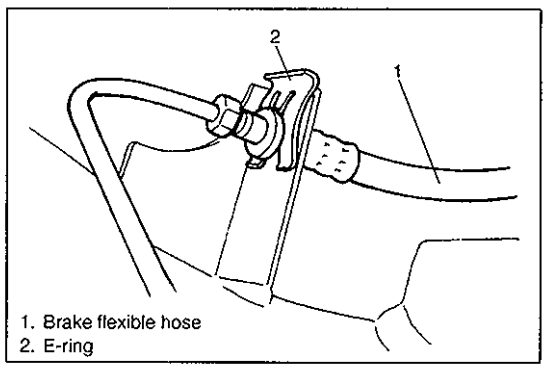

3) Remove brake flexible hose E-ring.

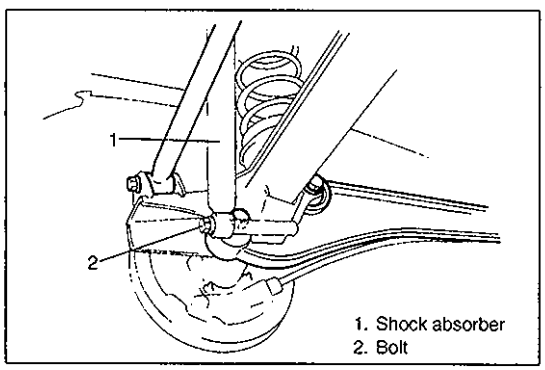

4) Remove shock absorber lower mounting bolt.

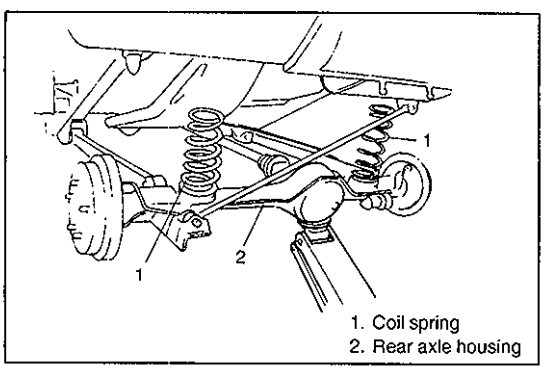

5) Lower rear axle housing gradually as far down as where coil spring can be removed.
6) Remove coil spring.

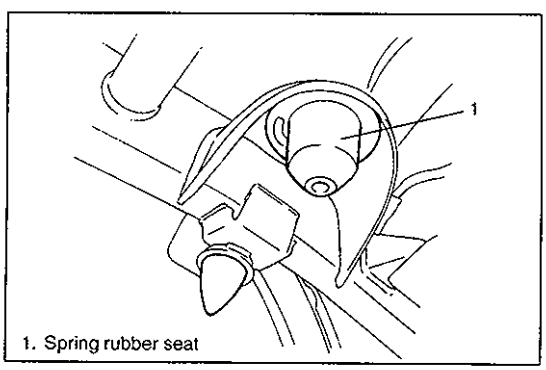

7) Remove spring rubber seat.

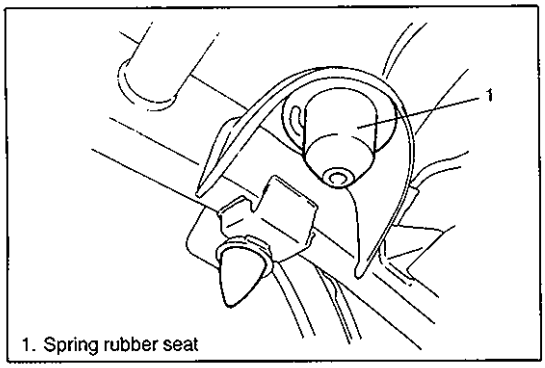

1. Spring rubber seat

INSTALLATION

1) Install spring rubber seat.

NOTE:
Before installing spring rubber seat, apply soap water on it.

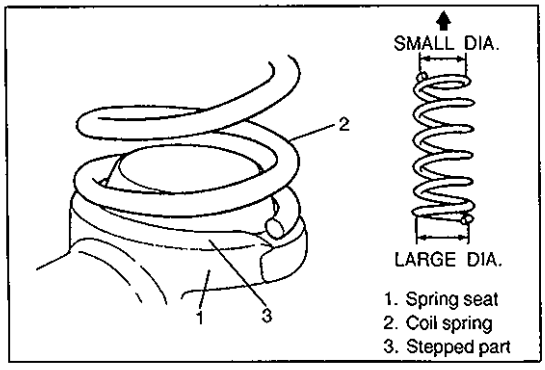

1. Spring seat
2. Coil spring
3. Stepped part

2) Install coil spring on spring seat of axle housing and then raise axle housing.

NOTE:
- **Upper and lower diameters of coil spring are different. Bring larger diameter end at bottom and set its open end in place on spring seat.**
- **When seating coil spring, mate spring end with stepped part of rear axle spring seat as shown.**

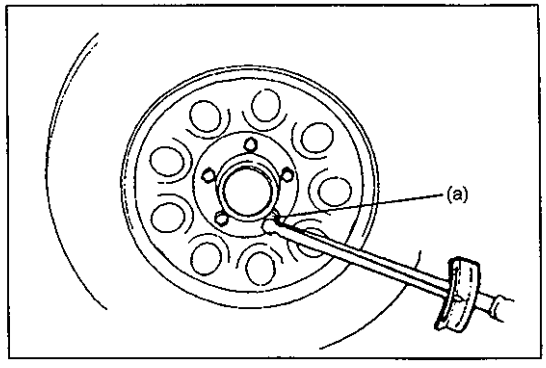

3) Install shock absorber lower mounting bolt.
Nut should not be tightened.
4) Install brake flexible hose E-ring.
5) Install wheel and tighten wheel nuts to specified torque.

Tightening Torque
(a): 95 N·m (9.5 kg-m, 69.0 lb-ft)

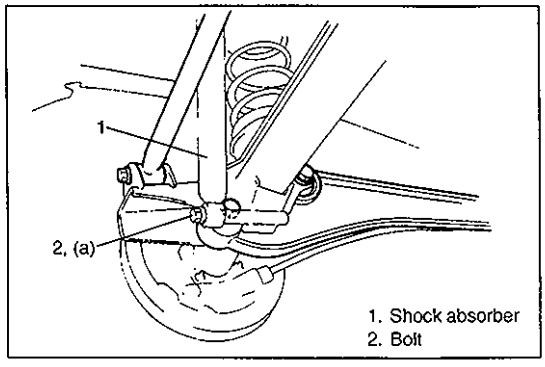

1. Shock absorber
2. Bolt

6) Lower hoist and tighten absorber lower bolt to specified torque.

Tightening Torque
(a): 85 N·m (8.5 kg-m, 61.5 lb-ft)

NOTE:
For tightening of lower bolt, refer to NOTE given under SHOCK ABSORBER INSTALLATION in this section.

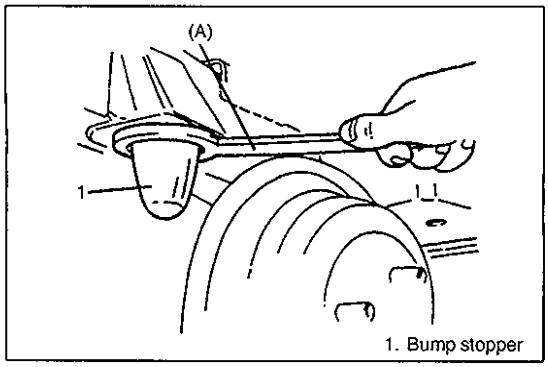

BUMP STOPPER

REMOVAL

1) Hoist vehicle.
2) Remove wheel.
3) Remove bump stopper by using special tool.

Special Tool
(A): 09941-66010

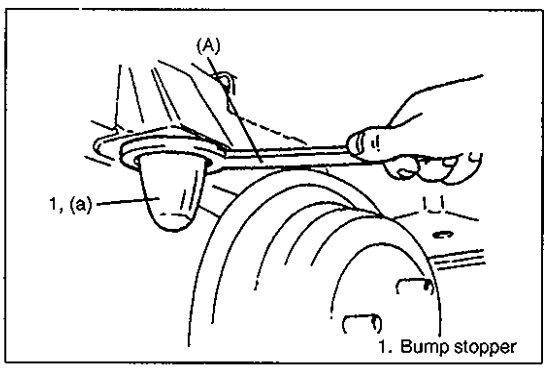

INSTALLATION

1) Tighten bump stopper to specified torque by using special tool.

Special Tool
(A): 09941-66010

Tightening Torque
(a): 50 N·m (5.0 kg-m, 36.5 lb-ft)

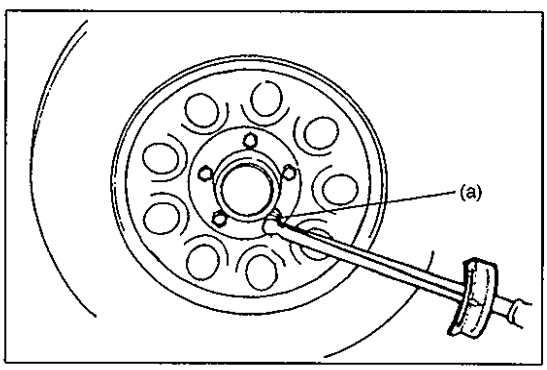

2) Install wheel and tighten wheel nuts to specified torque.

Tightening Torque
(a): 95 N·m (9.5 kg-m, 69.0 lb-ft)

3) Lower hoist.

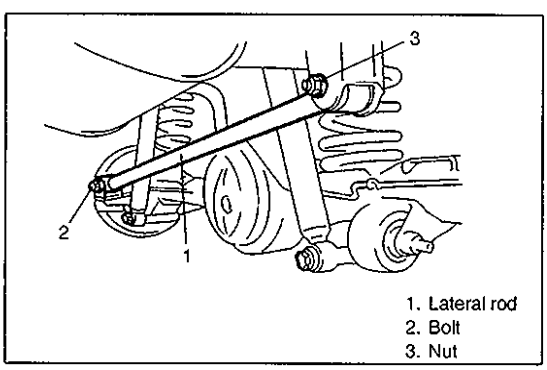

LATERAL ROD

REMOVAL

1) Hoist vehicle.
2) Remove lateral rod mounting bolts.
3) Remove lateral rod.

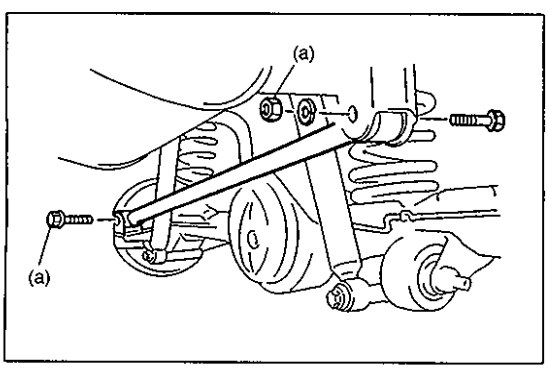

INSTALLATION

1) Install lateral rod to vehicle body and rear axle housing.
   Bolt and nut should not be tightened.
2) Lower hoist and with vehicle in non-loaded condition, tighten lateral rod bolt and nut to specified torque.

Tightening Torque
(a): 90 N•m (9.0 kg-m, 65.0 lb-ft)

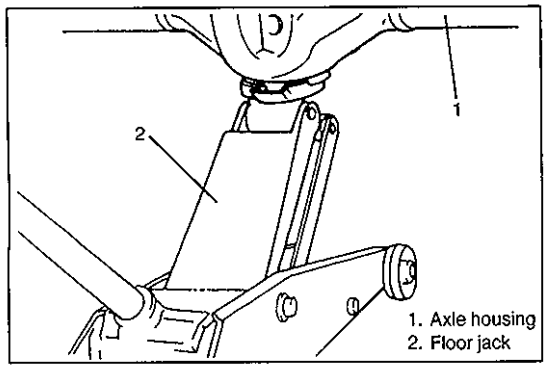

TRAILING ARM

REMOVAL

1) Hoist vehicle.
2) Support rear axle housing by using floor jack.

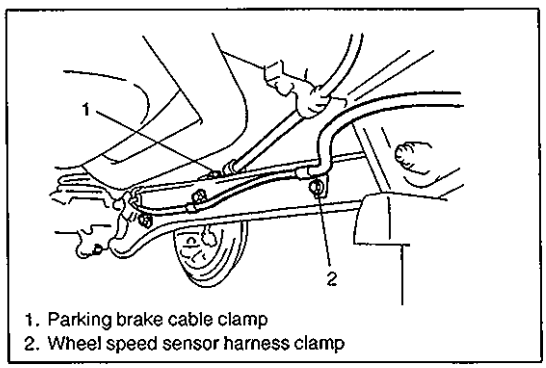

3) Disconnect parking brake cable clamp from trailing arm.
4) Disconnect wheel speed sensor harness clamps from trailing arm (if equipped with ABS).

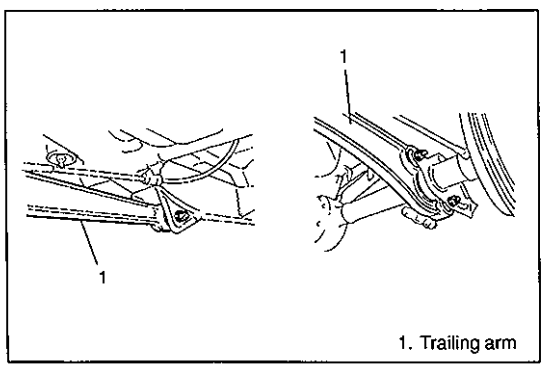

5) Remove trailing arm mounting bolts.
6) Remove trailing arm.

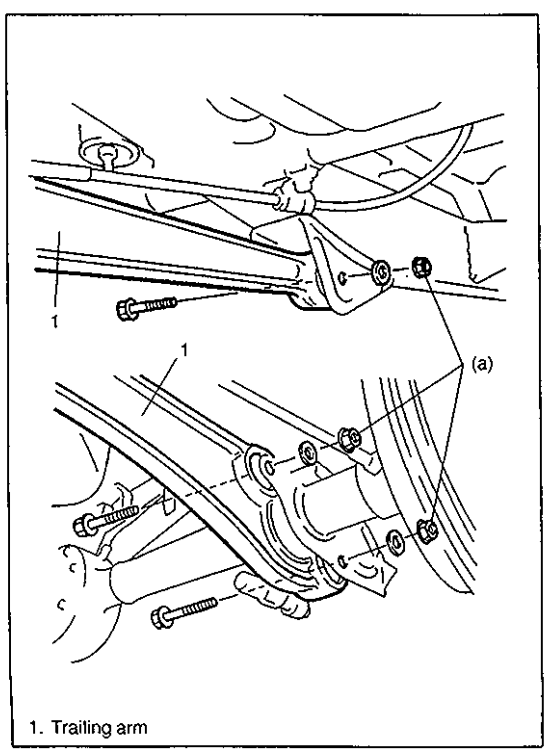

INSTALLATION

1) Install trailing arm to vehicle body and rear axle housing, referring to figure for proper installing direction of bolts.
   Nuts should not be tightened.
2) Remove floor jack.
3) Connect wheel speed sensor harness clamps to trailing arm (if equipped with ABS).
4) Connect parking brake cable clamp to trailing arm.
5) Lower hoist and with vehicle in non-loaded condition, tighten trailing arm nuts to specified torque.

Tightening Torque
(a): 90 N·m (9.0 kg-m, 65.0 lb-ft)

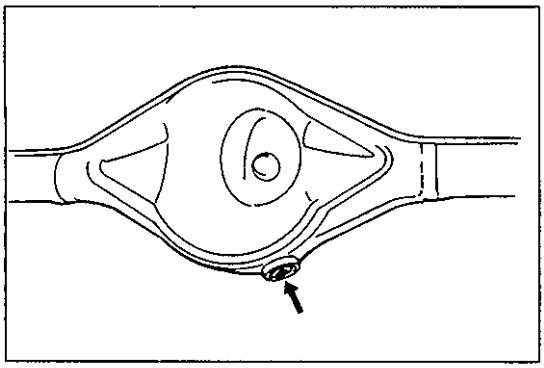

REAR AXLE SHAFT AND WHEEL BEARING

REMOVAL

1) Hoist vehicle and remove wheel.
2) Remove rear brake drum and disconnect parking brake cable from brake back plate. For details, refer to BRAKE BACK PLATE REMOVAL of Section 5.
3) Drain gear oil from rear axle housing by loosening drain plug.

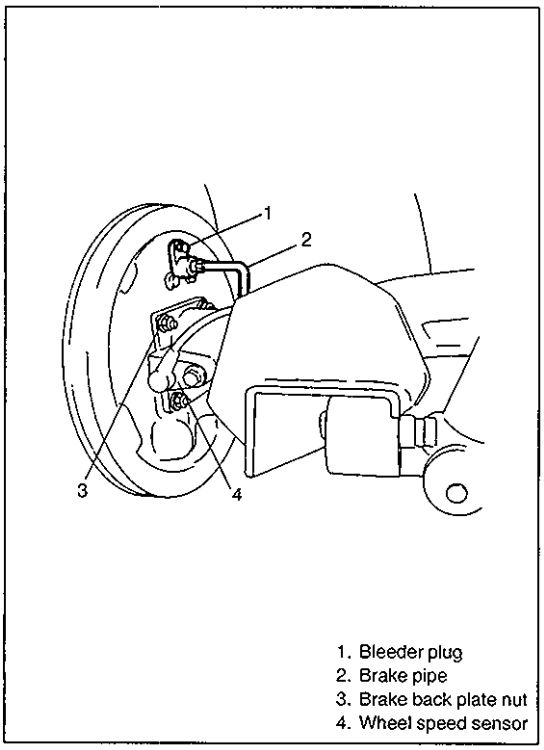

1. Bleeder plug
2. Brake pipe
3. Brake back plate nut
4. Wheel speed sensor

4) Remove wheel speed sensor from rear axle housing (if equipped with ABS).

CAUTION:
- **Do not pull wire harness or twist more than necessary when removing rear wheel speed sensor.**
- **Do not cause damage to surface of rear wheel speed sensor or pole piece and do not allow dust, etc. to enter its installation hole.**

5) Disconnect brake pipe(s) from wheel cylinder and put wheel cylinder bleeder plug cap onto pipe to prevent fluid from spilling.
6) Remove brake back plate nuts from axle housing.

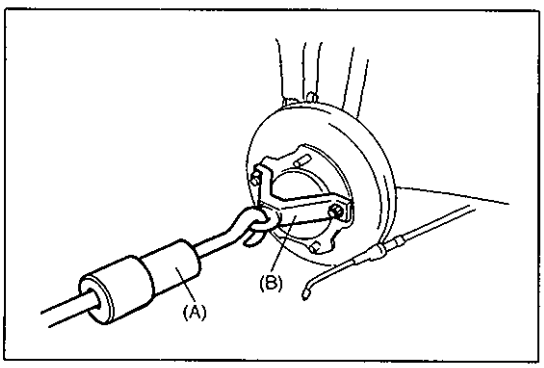

7) Using special tools indicated, draw out axle shaft with brake back plate.

Special Tool
(A): 09942-15510
(B): 09943-35511

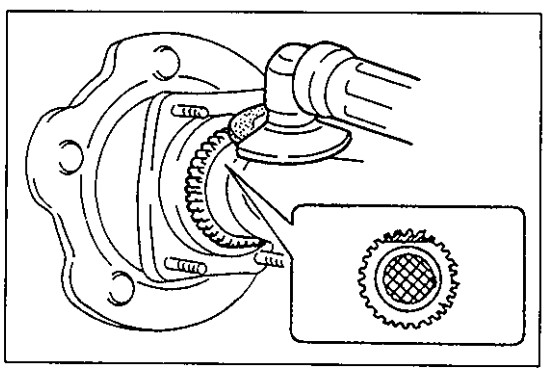

8) If equipped with ABS, in order to remove sensor rotor from retainer ring, grind with a grinder one part of the sensor rotor as illustrated till it becomes thin.

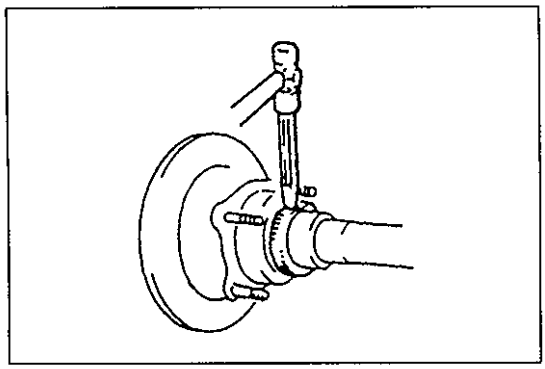

9) Break with a chisel the thin ground sensor rotor, and it can be removed (if equipped with ABS).

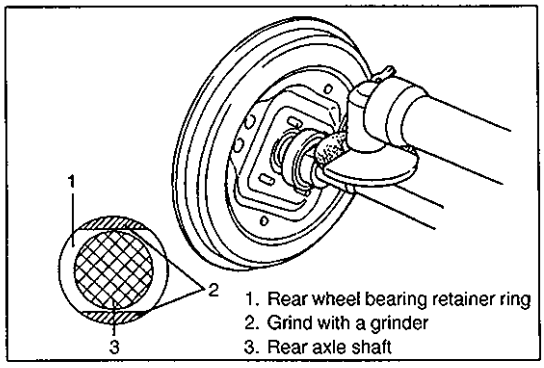

1. Rear wheel bearing retainer ring
2. Grind with a grinder
3. Rear axle shaft

10) In order to remove the retainer ring from the shaft, grind with a grinder two parts of the bearing retainer ring as illustrated till it becomes thin.

CAUTION:
Be careful not to go so far as to grind the shaft.

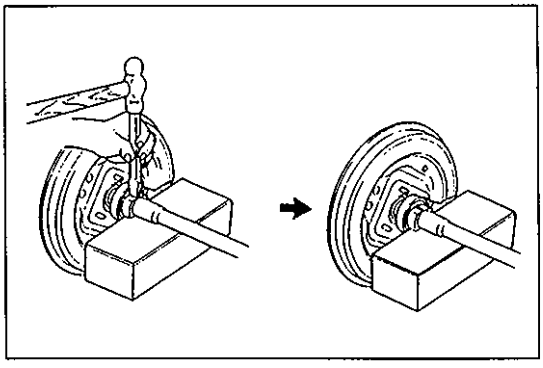

11) Break with a chisel the thin ground retainer ring, and it can be removed.

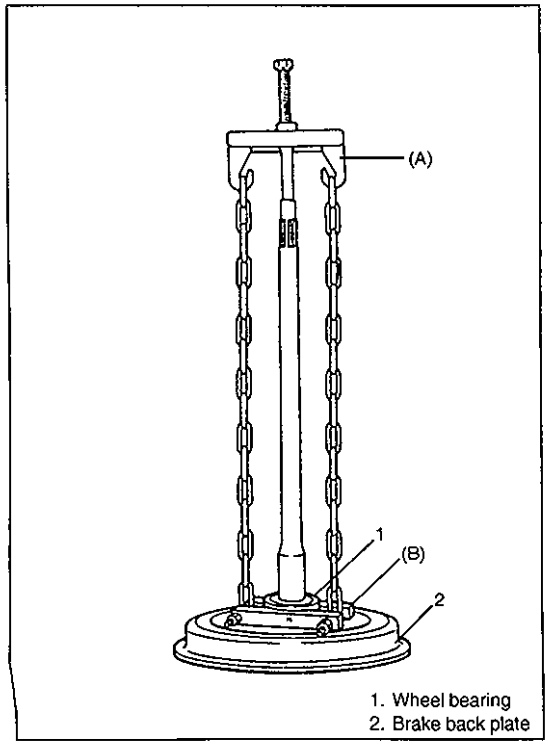

1. Wheel bearing
2. Brake back plate

12) Using special tools, remove bearing from shaft and then remove brake back plate.

Special Tool
(A): 09927-18411
(B): 09921-57810

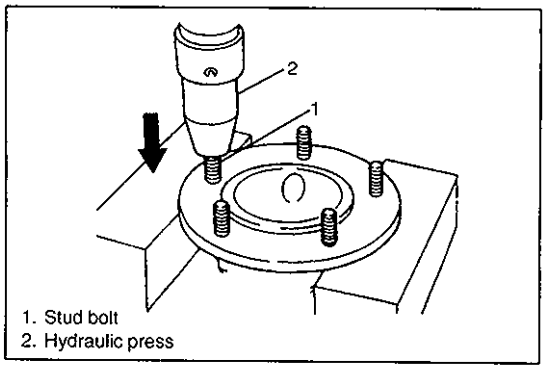

1. Stud bolt
2. Hydraulic press

13) Remove stud bolt(s) by using hydraulic press.

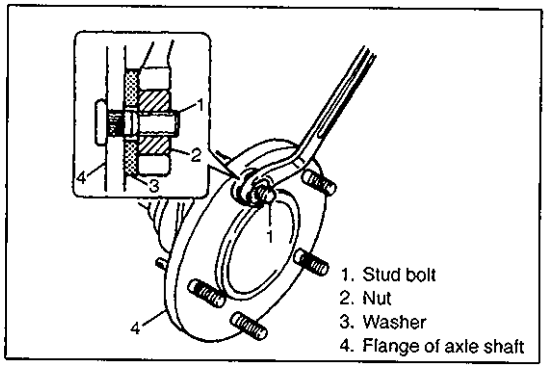

1. Stud bolt
2. Nut
3. Washer
4. Flange of axle shaft

INSTALLATION

Install removed parts in reverse order of removal procedure, noting the following.

1) Aligning serrations between new stud bolt(s) and flange, install new stud bolt(s) by tightening nut as shown.

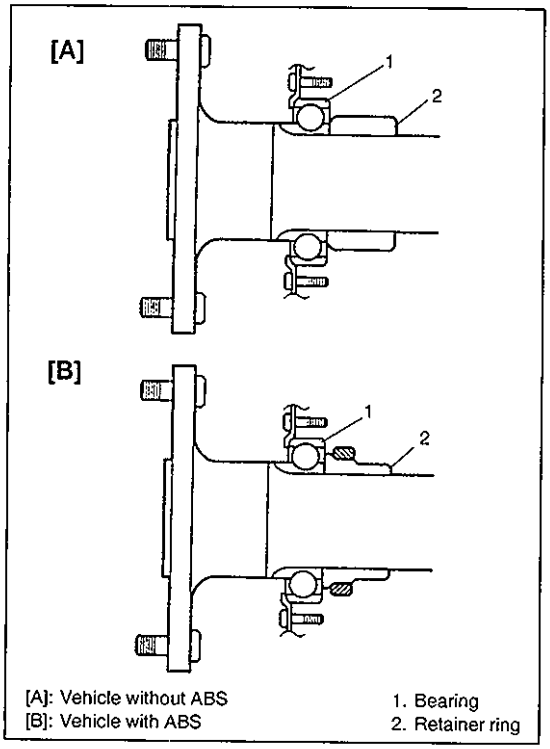

[A]: Vehicle without ABS
[B]: Vehicle with ABS

1. Bearing
2. Retainer ring

2) Press-fit wheel bearing and retainer ring as shown.

NOTE:

- **Use care not to cause any damage to outside of retainer ring.**
- **Refer to figure so that wheel bearing is installed in proper direction.**

3) For vehicle with ABS, press-fit new sensor rotor as shown.

NOTE:

Use care not to cause any damage to outside of retainer ring.

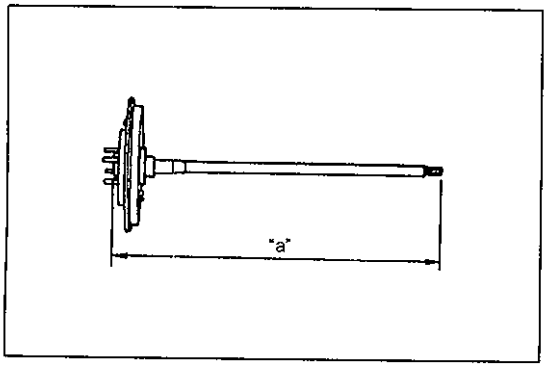

4) Inspect axle shaft length.

Shaft length "a"	
Left side	775.5 mm (30.5 in.)
Right side	559.5 mm (22.0 in.)

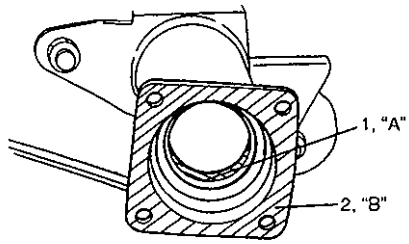

1. Oil seal
2. Axle housing

5) Apply grease to axle shaft oil seal lip as shown.

"A": Grease 99000-25010

6) Apply sealant to mating surface of axle housing with brake back plate.

NOTE:
Make sure to remove old sealant before applying it anew.

"B": Sealant 99000-31110

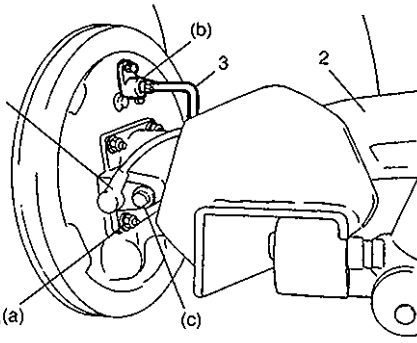

1. Wheel speed sensor
2. Axle housing
3. Brake pipe
4. Brake back plate nut

7) Install rear axle shaft to rear axle housing and tighten brake back plate nuts to specified torque.

NOTE:
When installing rear axle shaft, be careful not to cause damage to oil seal lip in axle housing.

Tightening Torque
(a): 23 N·m (2.3 kg-m, 17.0 lb-ft)

8) Connect brake pipe to wheel cylinder and tighten brake pipe flare nut to specified torque.

Tightening Torque
(b): 16 N·m (1.6 kg-m, 11.5 lb-ft)

9) Tighten wheel speed sensor bolt to specified torque (if equipped with ABS).

Tightening Torque
(c): 10 N·m (1.0 kg-m, 7.5 lb-ft)

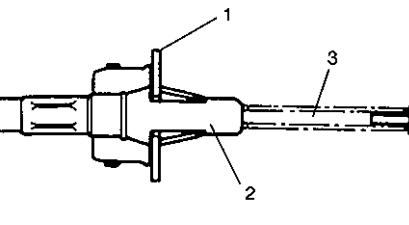

1. Brake back plate
2. Cable stopper ring
3. Parking brake cable

10) Install parking brake cable to brake back plate.

11) Install brake shoes, referring to steps 1) and 4) of BRAKE SHOE INSTALLATION of Section 5.
12) Install brake drum. Refer to steps 1) to 2) of REAR BRAKE DRUM INSTALLATION of Section 5.
13) Refill differential housing with new specified gear oil. Refer to "ON-VEHICLE SERVICE" in Section 7E for refill.
14) Fill reservoir with brake fluid and bleed brake system. (For bleeding operation, refer to BLEEDING BRAKES in Section 5.)

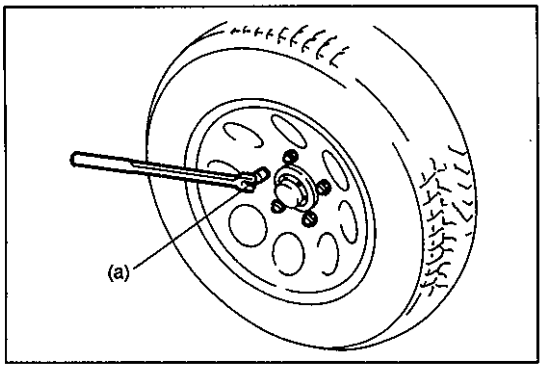

15) Install wheel and tighten wheel nuts to specified torque.

Tightening Torque
(a): 95 N·m (9.5 kg-m, 69.5 lb-ft)

16) Upon completion of all jobs, depress brake pedal with about 30 kg (66 lbs) load over ten times so as to obtain proper drum-to shoe clearance.
Adjust parking brake cable. (For adjustment, refer to PARKING BRAKE CHECK AND ADJUSTMENT in Section 5.)
17) Tighten parking brake lever cover screws.
18) Check to ensure that brake drum is free from dragging and proper braking is obtained. Then remove vehicle from hoist and perform brake test (foot brake and parking brake).
19) Check each installed part for oil leakage.

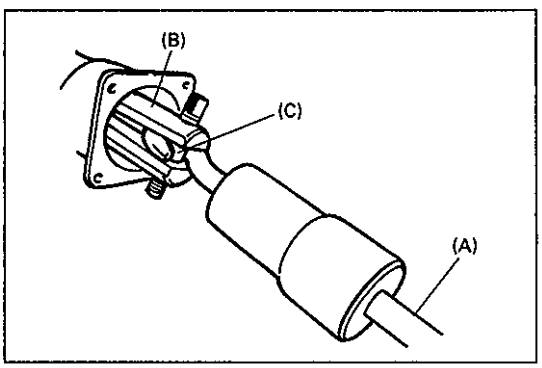

REAR AXLE SHAFT INNER OIL SEAL

REMOVAL

1) Remove rear axle shaft. For details, refer to steps 1) to 7) of REAR AXLE SHAFT AND WHEEL BEARING REMOVAL in this section.
2) Remove rear axle shaft inner oil seal by using special tools.

Special Tool
(A): 09942-15510
(B): 09944-96010 (remover)
(C): 09921-26010 (collar)

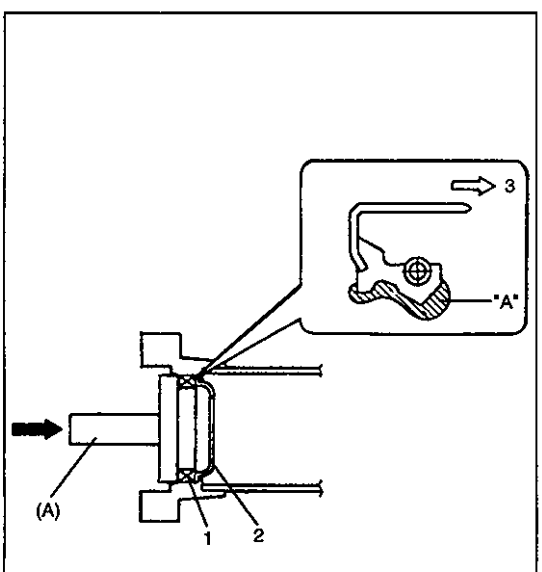

1. Inner oil seal
2. Oil seal protector
3. Differential side

INSTALLATION

1) Using special tools drive in oil seal until it contacts oil seal protector in axle housing.

NOTE:
- **Make sure that oil seal is free from inclination as it is installed.**
- **Refer to figure so that oil seal is installed in proper direction.**

Special Tool
(A): 09913-75520

"A": Grease 99000-25010

2) For procedure hereafter, refer to steps 6) to 17) of REAR AXLE SHAFT AND WHEEL BEARING INSTALLATION in this section.

REAR AXLE HOUSING

REMOVAL

1) Hoist vehicle and remove wheels.
2) Remove rear axle shaft, refer to steps 2) to 7) of REAR AXLE SHAFT AND WHEEL BEARING REMOVAL in this section.

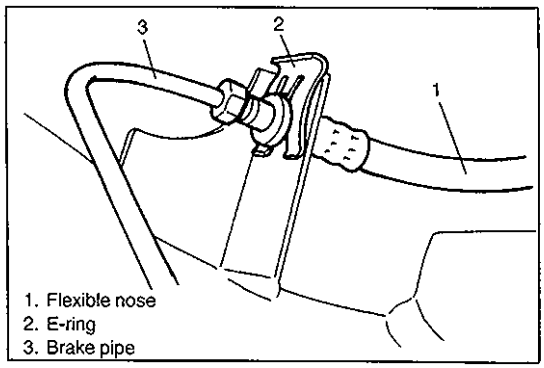

3) Disconnect brake pipe from flexible hose and remove E-ring.
4) Remove brake pipe clamps and pipes from axle housing.

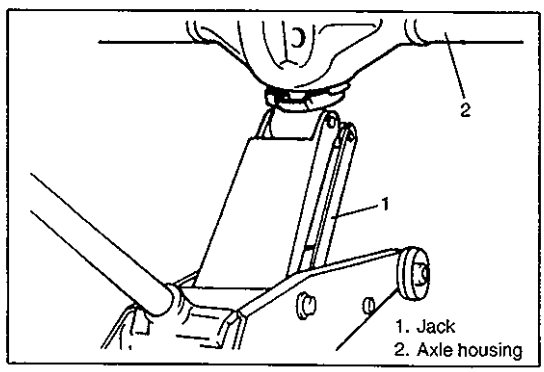

5) For jobs hereafter, support rear axle housing by using floor jack under axle housing.

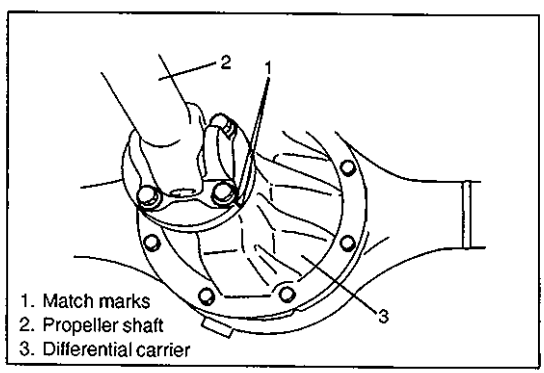

6) Remove LSPV stay from axle housing (if equipped with LSPV).
7) Before removing propeller shaft, give match marks on joint flange and propeller shaft as shown.
   Remove propeller shaft.
8) Remove differential carrier assembly.

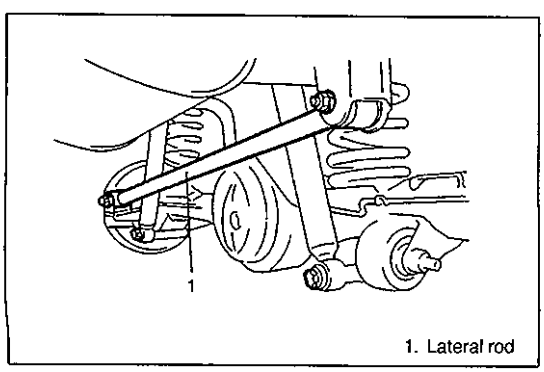

9) Remove lateral rod.

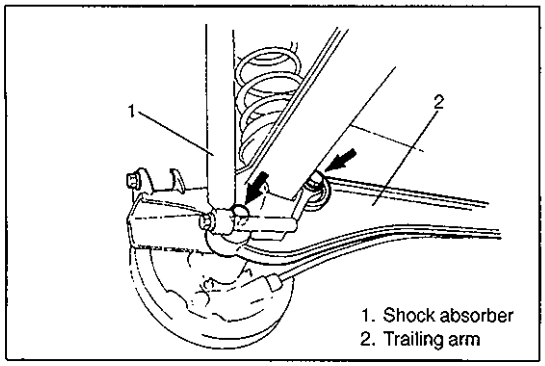

10) Loosen rear mounting nuts of trailing arm but don't remove bolt.
11) Remove shock absorber lower mounting bolt.

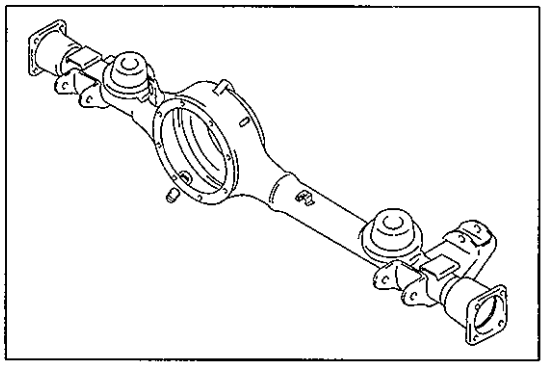

12) Lower floor jack until tension of suspension coil spring becomes a little loose and remove rear mount bolts of trailing arm.
13) Lower rear axle housing gradually.
14) Remove axle housing.

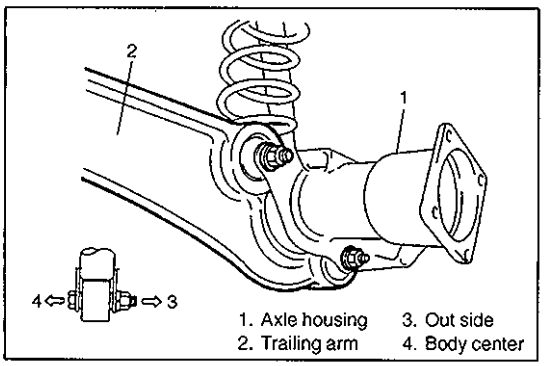

INSTALLATION

Install removed parts in reverse order of removal, noting the following.

1) Place rear axle housing on floor jack. Then install trailing arm rear mounting bolts (right & left) in proper direction as shown. At this time, mount nuts but don't tighten them.

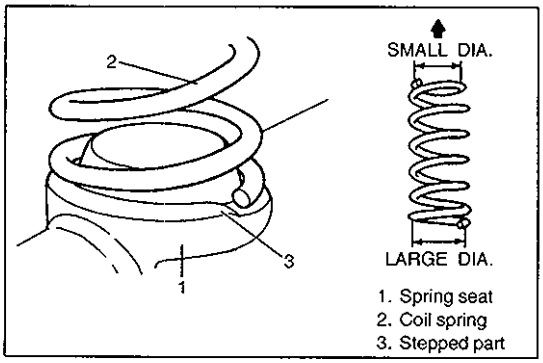

2) Install coil spring (right & left) on spring seat of axle housing and raise axle housing.

NOTE:

- **Upper and lower diameters of coil spring are different. Bring larger diameter end at bottom and set its open end in place on spring seat.**
- **When seating coil spring, mate spring end with stepped part of rear axle spring seat as shown.**

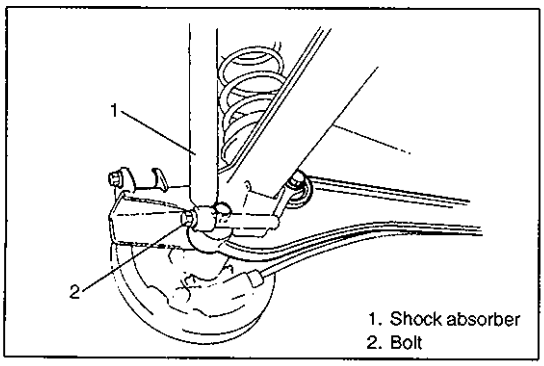

3) Install lower part of shock absorber to right and left sides of axle housing and install bolts. At this time, mount bolts but don't tighten them.

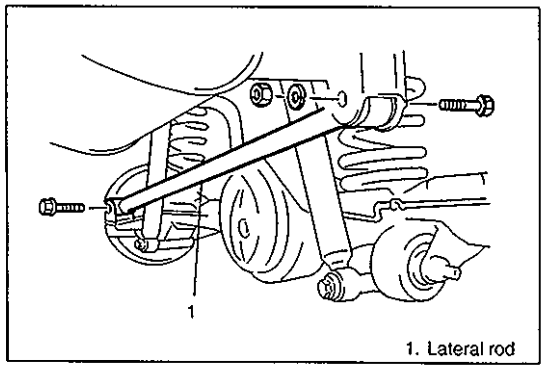

4) Install lateral rod and install bolts in proper direction as shown. At this time, mount bolt and nut but don't tighten them.

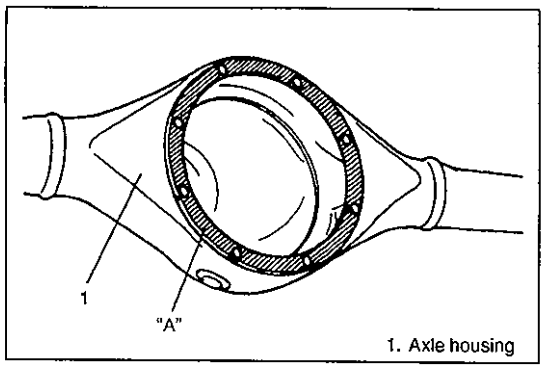

5) Clean mating surfaces of axle housing and differential carrier and apply sealant to housing side.

"A": Sealant 99000-31110

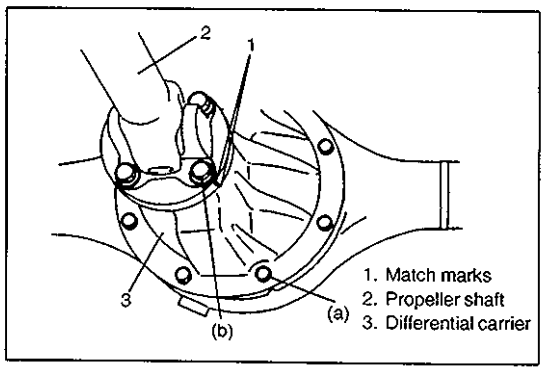

6) Install differential carrier assembly to axle housing and tighten carrier bolts to specified torque.

Tightening Torque
(a): 23 N·m (2.3 kg-m, 17.0 lb-ft)

7) Install propeller shaft to joint flange aligning match marks and tighten flange bolts to specified torque.

Tightening Torque
(b): 50 N·m (5.0 kg-m, 36.5 lb-ft)

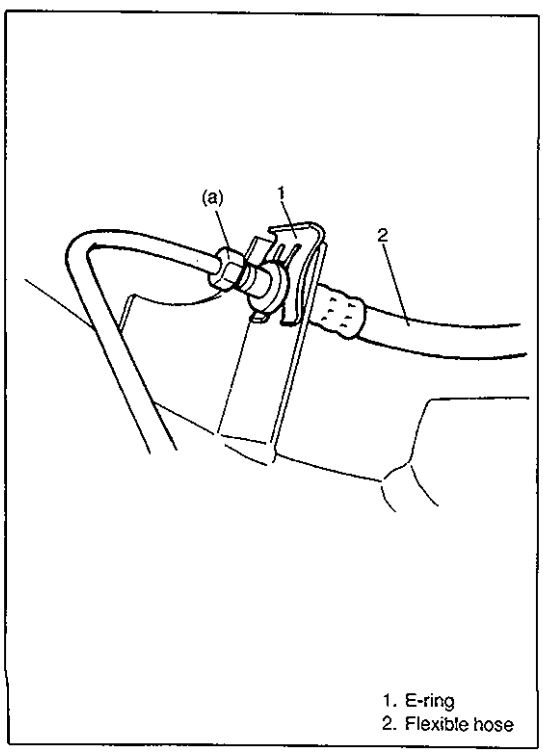

8) Install LSPV stay to axle housing and adjust LSPV stay position, referring to LSPV ASSEMBLY INSPECTION AND ADJUSTMENT of Section 5 (if equipped with LSPV).
9) Remove floor jack from axle housing.
10) Connect brake pipes and parking brake cable onto axle housing and clamp them securely.
For clamping positions, refer to Section 5 of this manual.
11) Connect brake flexible hose to bracket on axle housing and secure it with E-ring.
12) Connect brake pipe to brake flexible hose and tighten brake pipe flare nut to specified torque.

Tightening Torque
(a): 16 N·m (1.6 kg-m, 11.5 lb-ft)

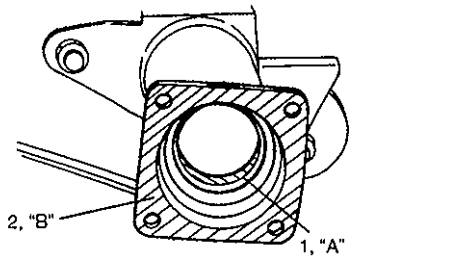

1. Oil seal
2. Axle housing

13) Clean mating surface of axle housing (right & left) with brake back plate and apply sealant as shown.

"B": Sealant 99000-31110

14) Apply grease to axle shaft oil seals lip (right & left) as shown.

"A": Grease 99000-25010

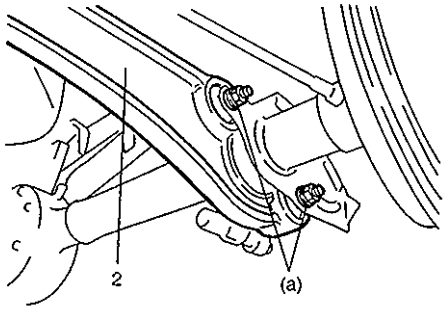

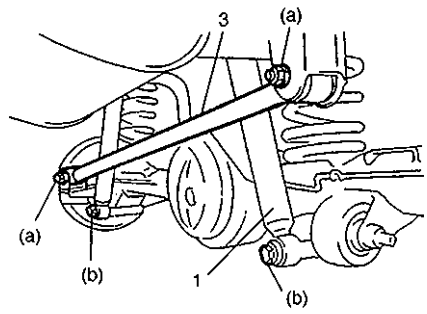

1. Shock absorber
2. Trailing arm
3. Lateral rod

15) Install rear axle shafts, brake shoes, brake drums and wheels. For details, refer to steps 7) to 17) of REAR AXLE SHAFT AND WHEEL BEARING INSTALLATION in this section.
16) Lower hoist.
17) Tighten right and left trailing arm nuts and shock absorber lower bolts to specified torque.
Tighten lateral rod bolt and nut to specified torque.

NOTE:
When tightening these bolts and nuts, be sure that vehicle is off hoist and in non loaded condition.

Tightening Torque
(a): 90 N·m (9.0 kg-m, 65.0 lb-ft)
(b): 85 N·m (8.5 kg-m, 61.5 lb-ft)

18) Check to ensure that brake drum is free from dragging and proper braking is obtained.
19) Perform brake test (foot brake and parking brake).
(For brake test, see Section 5.)
20) Check each installed part for oil leakage.

TIGHTENING TORQUE SPECIFICATIONS

Fastening Parts	Tightening Torque		
	N·m	kg-m	lb-ft
Shock absorber upper and lower bolt	85	8.5	61.5
Bump stopper	50	5.0	36.5
Lateral rod	90	9.0	65.0
Trailing arm nut (Front and Rear)			
Brake back plate nut	23	2.3	17.0
Brake pipe flare nut	16	1.6	11.5
Rear differential carrier bolt	23	2.3	17.0
Rear propeller shaft bolt	50	5.0	36.5
Wheel nut	95	9.5	69.0
Wheel speed sensor harness bolt	10	1.0	7.5

REQUIRED SERVICE MATERIALS

MATERIALS	RECOMMENDED SUZUKI PRODUCT	USE
Lithium grease	SUZUKI SUPER GREASE A (99000-25010)	Oil seal lip
Sealant	SUZUKI BOND NO. 1215 (99000-31110)	• Joint seam of axle housing and brake back plate • Joint seam of differential carrier and axle housing
Gear oil	For gear oil information, refer to SECTION 7E of this manual.	Differential gear (Rear axle housing)

SPECIAL TOOLS

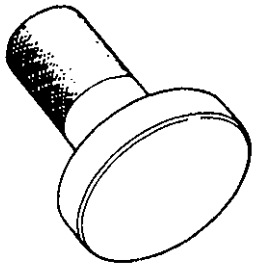 09913-75520 Bearing installer	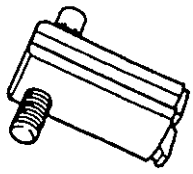 09944-96010 Bearing outer race remover 09921-26010 Bearing outer race remover collar	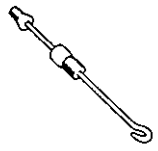 09942-15510 Sliding hammer	 09943-35511 Brake drum remover
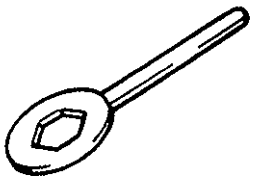 09941-66010 Bump stopper wrench	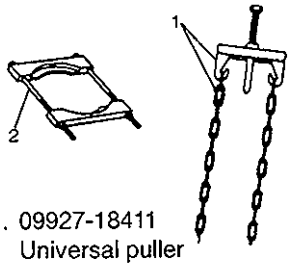 1. 09927-18411 Universal puller 2. 09921-57810 Bearing remover		

SECTION 3F

WHEELS AND TIRES

NOTE :
All wheel fasteners are important attaching parts in that they could affect the performance of vital parts and systems, and/or could result in major repair expense. They must be replaced with one of the same part number or with an equivalent part if replacement becomes necessary. Do not use a replacement part of lesser quality or substitute design. Torque values must be used as specified during reassembly to assure proper retention of all parts.
There is to be no welding as it may result in extensive damage and weakening of the metal.

CONTENTS

GENERAL DESCRIPTION 3F-1
Tires 3F-1
Wheels 3F-1
Replacement Tires 3F-1
Wheels Replacement 3F-2
Metric Lug Nuts and Wheel Studs 3F-2
DIAGNOSIS 3F-3
Diagnosis Table 3F-3
Barancing Wheels 3F-3
MAINTENANCE AND MINOR ADJUSTMENTS 3F-4
Wheel and Tire 3F-4
ON-VEHICLE SERVICE 3F-6
Wheel 3F-6
Tire 3F-7
TIGHTENING TORQUE SPECIFICATIONS 3F-7

GENERAL DESCRIPTION

TIRES

This vehicle is equipped with following tire, depending on vehicle specification.
205/70 R15 or 175/80 R15
The tires are of tubeless type. The tires are designed to operate satisfactorily with loads up to the full rated load capacity when inflated to the recommended inflation pressure.
Correct tire pressures and driving habits have an important influence on tire life Heavy cornering, excessively rapid acceleration, and unnecessary sharp braking increase tire wear.

WHEELS

Standard equipment wheels are following steel wheels.
15×5 1/2 JJ

REPLACEMENT TIRES

When replacement is necessary, the original equipment type tire should be used. Refer to the Tire Placard. Replacement tires should be of the same size, load range and construction as those originally on the vehicle. Use of any other size or type tire may affect ride, handling, speedometer/odometer calibration, vehicle ground clearance and tire or snow chain clearance to the body and chassis.

NOTE :
Do not mix different types of tires on the same vehicle such as radial, bias and bias–belted tires except in emergencies, because vehicle handling may be seriously affected and may result in loss of control.
It is recommended that new tires be installed in pairs on the same axle. If necessary to replace only one tire, it should be paired with the tire having the most tread, to equalize braking traction.

kPa	kgf/cm^2	psi
160	1.6	23
180	1.8	26
200	2.0	29
220	2.2	32
240	2.4	35
260	2.6	38
280	2.8	41
300	3.0	44
320	3.2	47
340	3.4	50
Conversion:	1 psi = 6.895 kPa 1 kgf/cm^2 = 98.066 kPa	

The metric term for tire inflation pressure is the kilopascal (kPa). Tire pressures will usually be printed in both kPa and psi on the Tire Placard. Metric tire gauges are available from tool suppliers. The chart, left table, converts commonly used inflation pressures from kPa to psi.

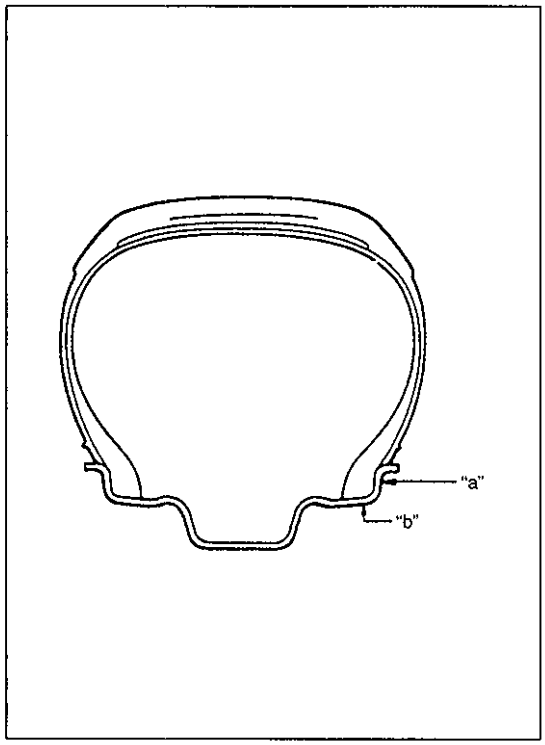

WHEELS REPLACEMENT

Wheels must be replaced if they are bent, dented, have excessive lateral or radial runout, leak air through welds, have elongated bolt holes, if lug nuts won't stay tight, or if they are heavily rusted. Wheels with greater runout than shown in left figure may cause objectional vibrations.

Wheels for replacement must be equivalent to the originally equipped wheels in load capacity, diameter, rim width, off-set and mounting configuration. A wheel of improper size or type may affect wheel and bearing life, brake cooling, speedometer/odometer calibration, ground clearance to the body and chassis.

To measure the wheel runout, it is necessary to use accurate dial indicator. The tire may be on or off the wheel. The wheel should be installed to the wheel balancer of the like for proper measurement. Take measurements of both lateral runout and radial runout at both inside and outside of the rim flange. With dial indicator set in place securely, turn the wheel one full revolution slowly and record every reading of the indicator.

When the measured runout exceeds the specification and correction by the balancer adjustment is impossible, replace the wheel. If the reading is affected by welding, paint or scratch, it should be ignored.

Lateral runout limit "a" : 1.20 mm (0.047 in.)

Radial runout limit "b" : 1.20 mm (0.047 in.)

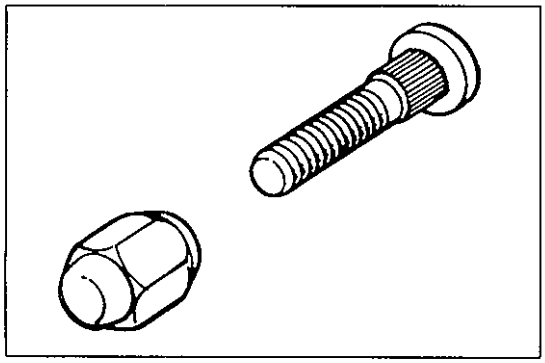

METRIC LUG NUTS AND WHEEL STUDS

All models use metric lug nuts and wheel studs (size M12 x 1.25).

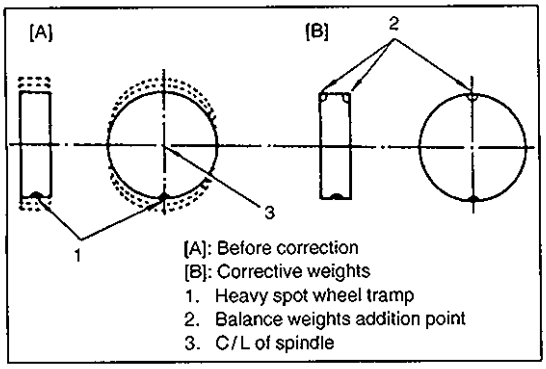

[A]: Before correction
[B]: Corrective weights
1. Heavy spot wheel tramp
2. Balance weights addition point
3. C/L of spindle

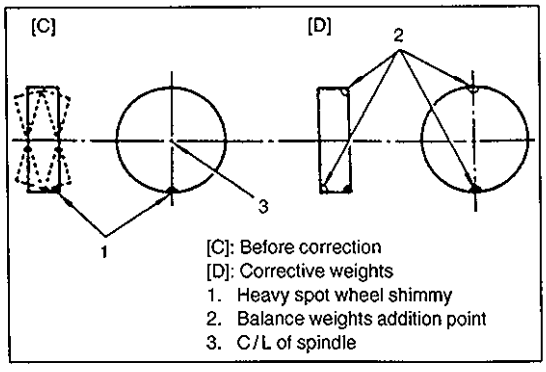

[C]: Before correction
[D]: Corrective weights
1. Heavy spot wheel shimmy
2. Balance weights addition point
3. C/L of spindle

DIAGNOSIS

DIAGNOSIS TABLE

Refer to SECTION 3.

BALANCING WHEELS

There are two types of wheel and tire balance: static and dynamic. Static balance, as shown in left figure, is equal distribution of weight around wheel. Wheels that are statically unbalanced cause bouncing action called tramp. This condition will eventually cause uneven tire wear.

Dynamic balance, as shown in left figure, is equal distribution of weight on each side of wheel centerline so that when the tire spins there is no tendency for the assembly to move from side to side. Wheels that are dynamically unbalanced may cause shimmy.

GENERAL BALANCE PROCEDURE

Deposits of mud, etc. must be cleaned from inside of rim.

WARNING:
Stones should be removed from tread in order to avoid operator injury during spin balancing and to obtain good balance.

Tire should be inspected for any damage, then balanced according to equipment manufacturer's recommendation.

OFF-VEHICLE BALANCING

Most electronic off-vehicle balancers are more accurate than on-vehicle spin balancers. They are easy to use and give a dynamic (two plane) balance. Although they do not correct for drum or disc unbalance as does on-vehicle spin balancing, this is overcome by their accuracy, usually to within 1/8 ounce.

ON-VEHICLE BALANCING

ON-vehicle balancing methods vary with equipment and tool manufacturers. Be sure to follow each manufacturer's instructions during balancing operation.

MAINTENANCE AND MINOR ADJUSTMENTS

WHEEL AND TIRE

Wheel repairs that use welding, heating, or peening are not approved. All damaged wheels should be replaced.

STUDS

If a broken stud is found, see Section 3E (rear) or Section 3D (front) for Note and Replacement procedure.

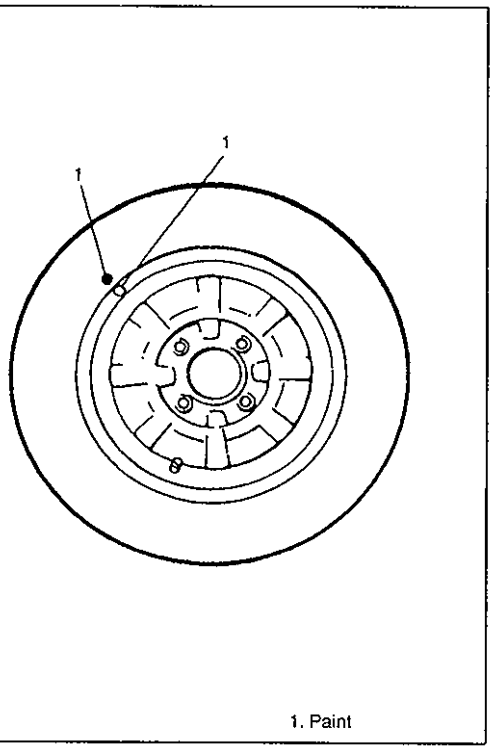

1. Paint

MATCHED TIRES AND WHEELS
(For vehicle equipped with steel wheels)

Tires and wheels are matchmounted at the assembly plant.
This means that the radially stiffest part of the tire, or "high spot", is matched to the smallest radius or "low spot" of the wheel.
This is done to provide the smothest possible ride.
The "high spot" of the tire is originally marked by paint dot on the outboard sidewall. This paint dot will eventually wash off the tire.
The "low spot" of the wheel is originally marked by paint dot on the wheel rim-flange. Properly assembled, the wheel rims' paint dot should be aligned with the tires' paint dot as shown in left figure.
Whenever a tire is dismounted from its wheel, it should be re-mounted so that the tire and wheel are matched. If the tire's paint dot cannot be located, a line should be scribed on the tire and wheel before dismounting to assure that it is remounted in the same position.

INFLATION OF TIRES

The pressure recommended for any model is carefully calculated to give a satisfactory ride, stability, steering, tread wear, tire life and resistance to bruises.
Tire pressure, with tires cold, (after vehicle has set for three hours or more, or driven less than one mile) should be checked monthly or before any extended trip. Set to the specifications on the tire placard located on the driver's side door lock pillar.
It is normal for tire pressure increase when the tires become hot during driving. Do not bleed or reduce tire pressure after driving. Bleeding reduces the "Cold Inflation Pressure."

Higher than Recommended Pressure Can Cause:

1. Hard ride
2. Tire bruising or carcass damage
3. Rapid tread wear at center of tire

Unequal Pressure on Same Axle Can Cause:

1. Uneven braking
2. Steering lead
3. Reduced handling
4. Swerve on acceleration

Valve caps should be kept on valves to keep dust and water out.

Lower than Recommended Pressure Can Cause:

1. Tire squeal on turns
2. Hard steering
3. Rapid and uneven wear on the edges of the tread
4. Tire rim bruises and rupture
5. Tire cord breakage
6. High tire temperatures
7. Reduced handling
8. High fuel consumption

TIRE PLACARD

The tire placard is located on the driver's side door lock pillar and should be referred to for tire information. The placard lists the maximum load, tire size and cold tire pressure where applicable.

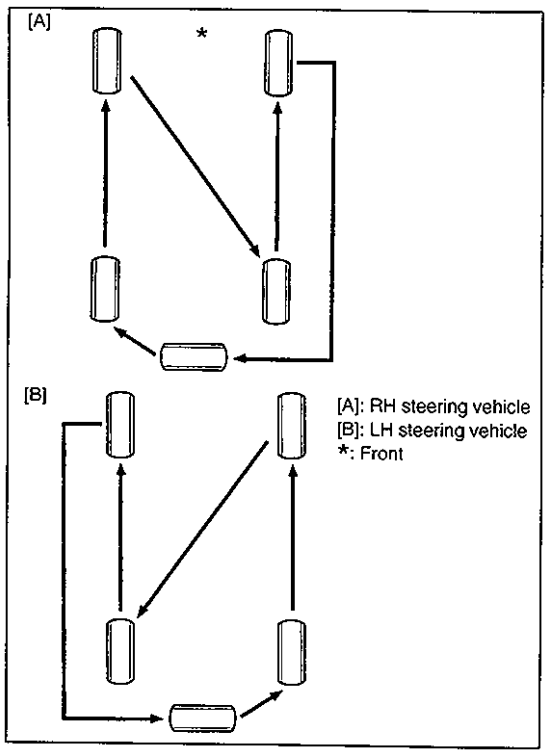

TIRE ROTATION

To equalize wear, rotate tires periodically as shown in figure.

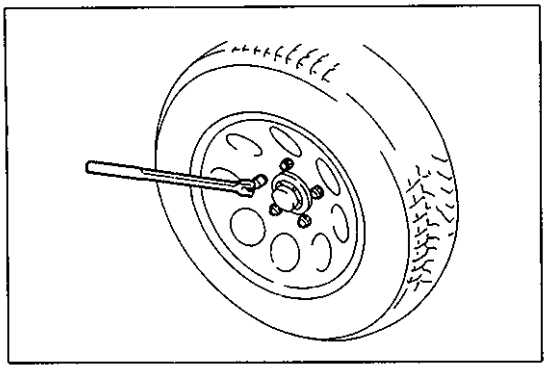

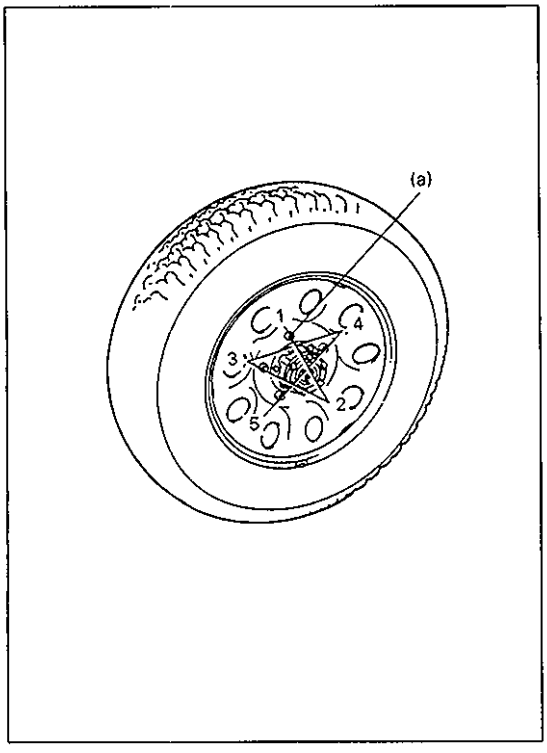

ON-VEHICLE SERVICE

WHEEL

REMOVAL

1) Loosen wheel nuts by approximately 180° (half a rotation).
2) Hoist vehicle.
3) Remove wheel.

NOTE:
Never use heat to loosen tight wheel because application of heat to wheel can shorten life of wheel and damage wheel bearings.

INSTALLATION

Wheel nuts must be tightened in sequence and to proper torque to avoid bending wheel or brake drum or disc as in figure.

NOTE:
Before installing wheels, remove any build-up of corrosion on wheel mounting surface and brake drum or disc mounting surface by scraping and wire brushing. Installing wheels without good metal-to-metal contact at mounting surfaces can cause wheel nuts to loosen, which can later allow wheel to come off while vehicle is moving.

Tightening Torque
(a): 95 N·m (9.5 kg-m, 69.0 lb-ft)

TIRE

MOUNTING AND DEMOUNTING

Use tire changing machine to mount or demount tires. Follow equipment manufacturer's instructions. Do not use hand tools or tire irons alone to change tires as they may damage tire beads or wheel rim.

Rim bead seats should be cleaned with wire brush or coarse steel wool to remove lubricants, old rubber and light rust. Before mounting or demounting tire, bead area should be well lubricated with approved tire lubricant.

After mounting, inflate to 240kPa (35 psi) so that beads are completely seated. Then adjust pressure to specified shown on tire placard.

WARNING:
Do not stand over tire when inflating. Bead may break when bead snaps over rim's safety hump and cause serious personal injury.
Do not exceed 240 kPa (35 psi) pressure when inflating. If 240 kPa (35 psi) pressure will not seat beads, deflate, re-lubricate and reinflate. Over inflation may cause bead to break and cause serious personal injury.

Install valve core and inflate to proper pressure.

TIRE REPAIR

There are many different materials and techniques on the market to repair tires. As not all of these work on all types of tires, tire manufacturers have published detailed instructions on how and when to repair tires. These instructions can be obtained from the tire manufacturer.

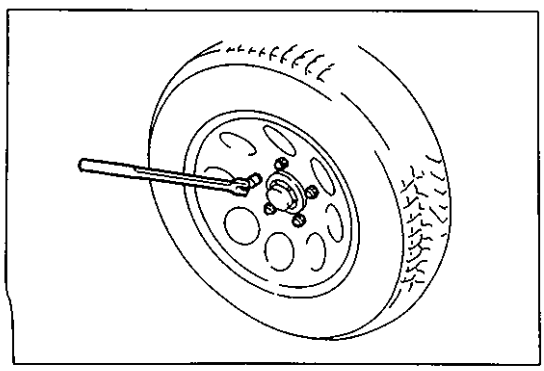

TIGHTENING TORQUE SPECIFICATIONS

Tightening Torque for wheel nut
(a): 95 N·m (9.5 kg-m, 69.0 lb-ft)

SECTION 4B

PROPELLER SHAFTS

NOTE:

- **All propeller shaft fasteners are an important attaching part in that it could affect the performance of vital parts and systems, and/or could result in major repair expense. They must be replaced with one of the same part number or with an equivalent part if replacement becomes necessary. Do not use a replacement part of lesser quality or substitute design. Torque values must be used as specified during reassembly to assure proper retention of this part.**
- **Never attempt to heat, quench or straighten any propeller shaft part. Replace it with a new part, or damage to the part may result.**

CONTENTS

GENERAL DESCRIPTION 4B-1

DIAGNOSIS 4B-2
- Diagnosis Table 4B-2
- Propeller Shaft Joint Check 4B-2

ON-VEHICLE SERVICE 4B-3
- Removal 4B-3
- Installation 4B-3
- Universal Joint 4B-4

TIGHTENING TORQUE SPECIFICATION 4B-6

REQUIRED SERVICE MATERIAL 4B-6

SPECIAL TOOL 4B-6

GENERAL DESCRIPTION

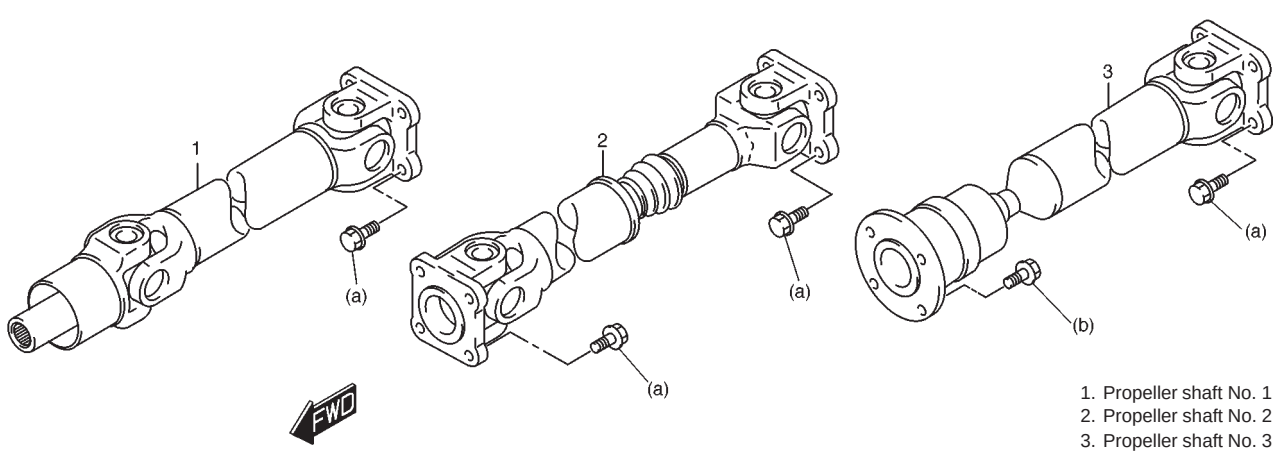

1. Propeller shaft No. 1
2. Propeller shaft No. 2
3. Propeller shaft No. 3

Tightening Torque
(a): 50 N·m (5.0kg-m, 36.5lb-ft)
(b): 33 N·m (3.3kg-m, 24lb-ft)

DIAGNOSIS

DIAGNOSIS TABLE

Condition	Possible Cause	Correction
Abnormal noise	• Loose universal joint bolt. • Spider bearing worn out or stuck. • Wear spider.	Tighten universal joint bolt. Replace. Replace propeller shaft.
Vibration	• Performed propeller shaft.	Replace.

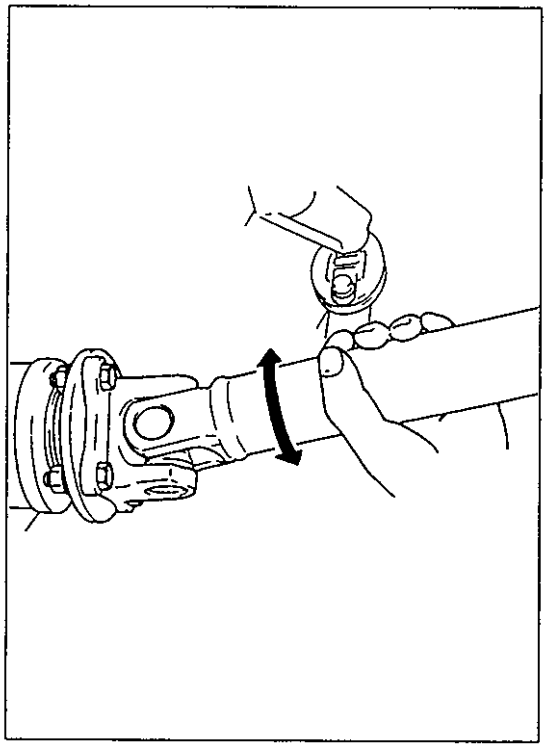

PROPELLER SHAFT JOINT CHECK

If universal joints are suspected of producing chattering or rattling noise, inspect them for wear. Check to see if cross spider rattles in yokes or if splines are worn down and replace defective propeller shaft with new one.

Noise coming from universal joint can be easily distinguished from other noises because rhythm of chattering or rattling is in step with cruising speed. Noise is pronounced particularly on standing start or in coasting condition (when braking effect of engine is showing in the drive line).

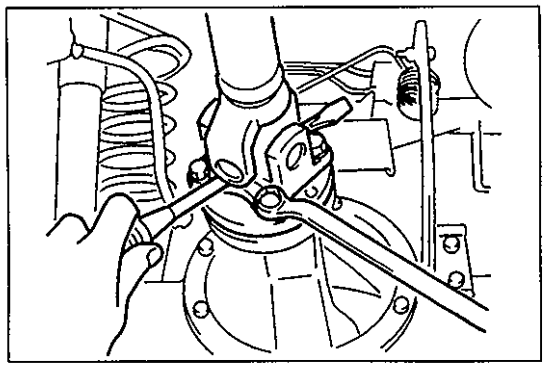

ON-VEHICLE SERVICE

REMOVAL

1) Hoist vehicle.
2) Drain transmission oil only when servicing propeller shaft No. 1.

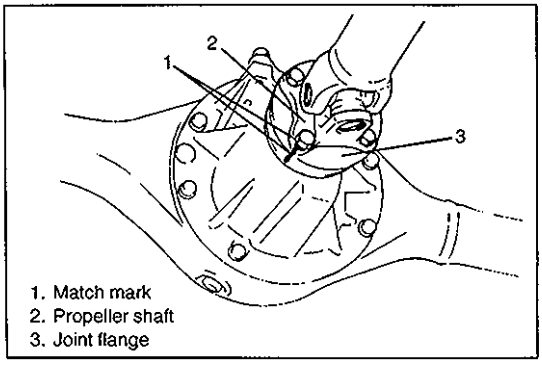

1. Match mark
2. Propeller shaft
3. Joint flange

3) Before removing propeller shaft, give match marks on each joint flange and propeller shaft as shown.
4) Remove propeller shaft(s).

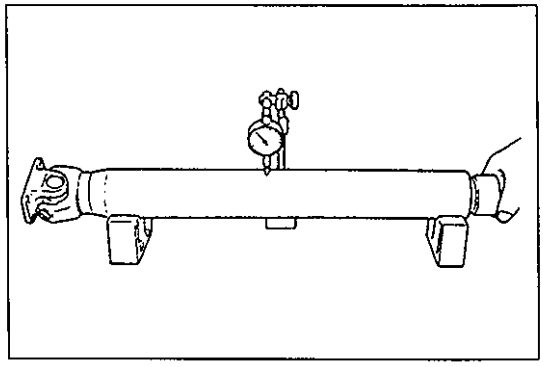

INSPECTION

Inspect propeller shaft and flange yoke for damage, and propeller shaft for runout.
If damage is found or shaft runout exceeds its limit, replace.

Runout limit: 0.8 mm (0.031 in.)

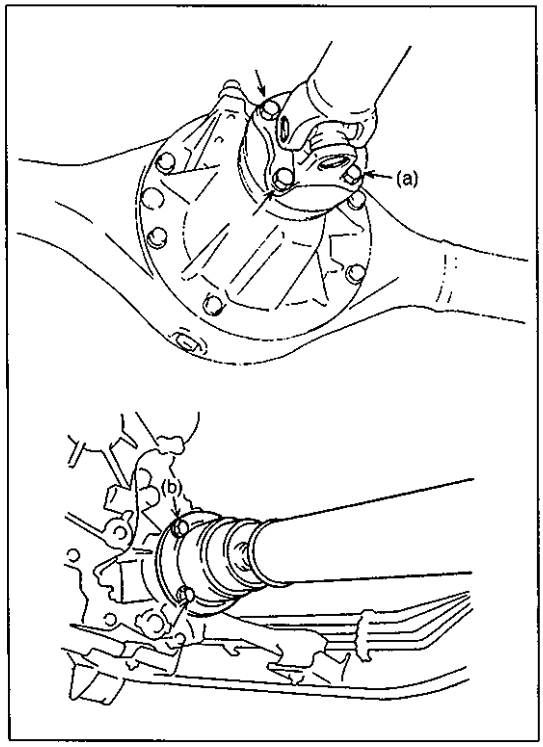

INSTALLATION

Install propeller shaft(s) reversing removal procedure noting following points :

- When installing propeller shaft, align the match marks. Otherwise, vibration may occur during driving.
- Use following specification to torque universal joint flange.

Tightening Torque
(a): 50 N·m (5.0 kg-m, 36.5 lb-ft)
(b): 33 N·m (3.3 kg-m, 24 lb-ft) only Propeller shaft No.3 transfer case side

NOTE:
If transmission oil was drained for front propeller shaft removal, pour specified gear oil into transmission case to specified level.

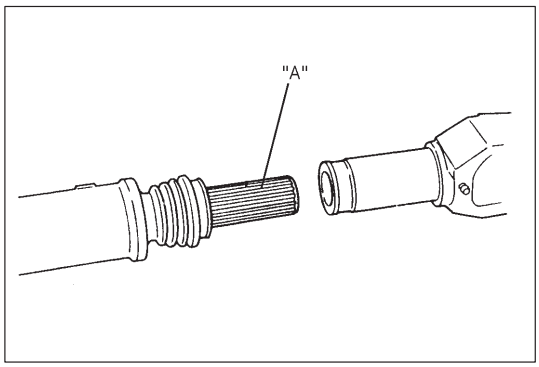

- Grease splines of propeller shaft No. 2 and No. 3.

  "A": Chassis Grease 99000-25030

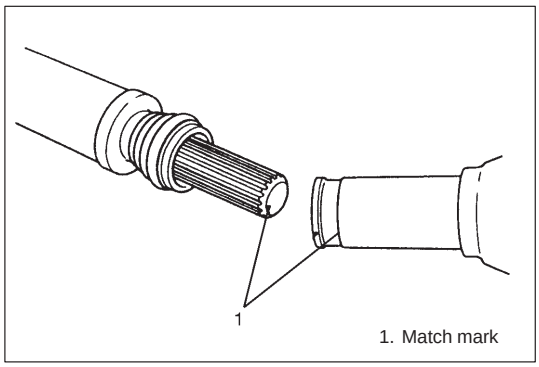

1. Match mark

- Match marks are provided on slip-on spline connections of propeller shaft No. 2 and No. 3. Inserting splined end into splined bore without regard to match marks can be a possible cause of noise or vibration of propeller shaft. Be sure to index marks.

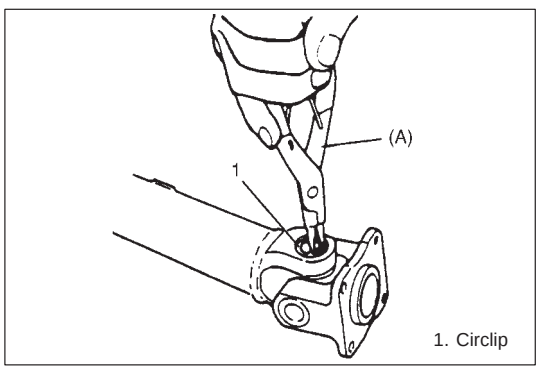

1. Circlip

UNIVERSAL JOINT

DISASSEMBLY

1) Using special tool, remove 4 circlips.

   Special tool
   (A): 09900-06108

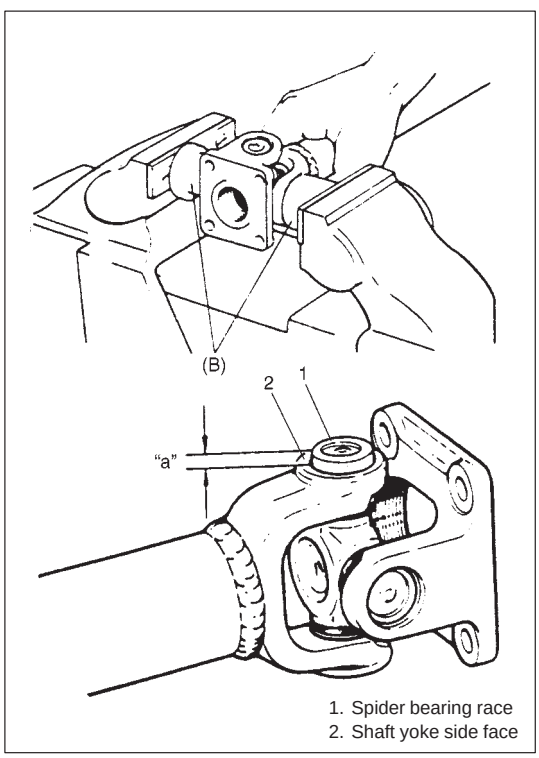

1. Spider bearing race
2. Shaft yoke side face

2) Apply penetrate lubricant between bearing race outer diameter and shaft yoke bore.
3) Using a set of special tool, push spider bearing race out 3 – 4 mm (0.12 – 0.16 in.) from shaft yoke side face.

   Special tool
   (B): 09926-48010

   Pushed out value of bearing race from shaft yoke side face
   "a": 3 – 4 mm (0.12 – 0.16 in.)

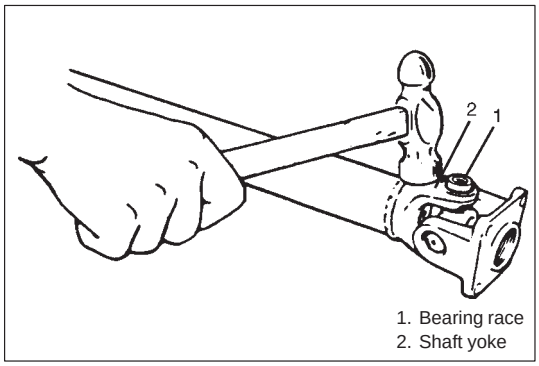

1. Bearing race
2. Shaft yoke

4) Tapping shaft yoke with a hammer, remove bearing race from shaft yoke completely.
5) Take out bearing race on the opposite side of shaft yoke in the same way as shown above.

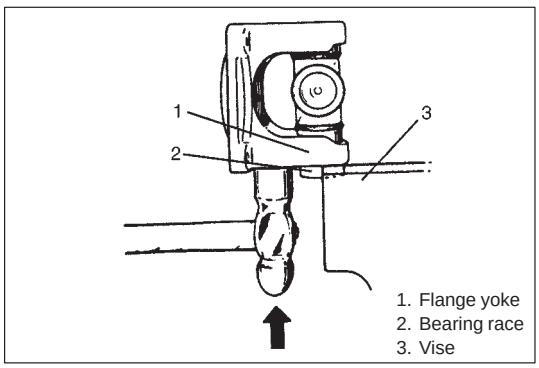

1. Flange yoke
2. Bearing race
3. Vise

6) Push out bearing race on flange yoke in the same way as Step 2).
7) Holding bearing race by a vise, tap flange yoke and take out race.
8) Take out bearing race on the opposite side of flange yoke in the same way as Step 5) to Step 6).

REASSEMBLY

CAUTION:
Do not reuse spider, bearings and circlips. Otherwise it may damage propeller shaft or cause abnormal vibration or noise.

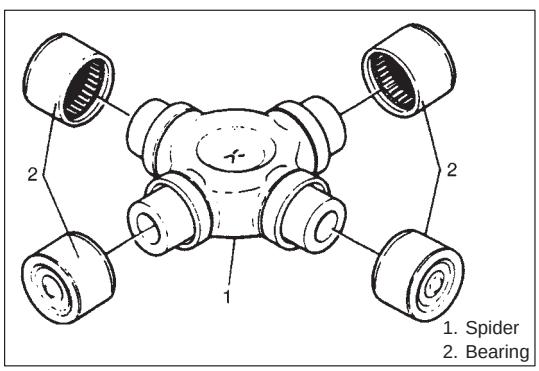

1. Spider
2. Bearing

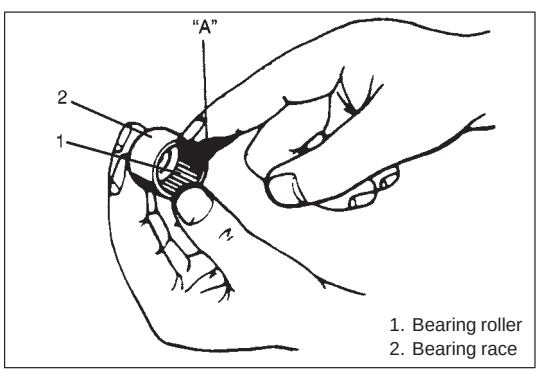

1. Bearing roller
2. Bearing race

1) Apply grease to rollers in bearing races.

"A": Grease 99000-25030

NOTE:
Make sure that rollers in bearing race are all in place.

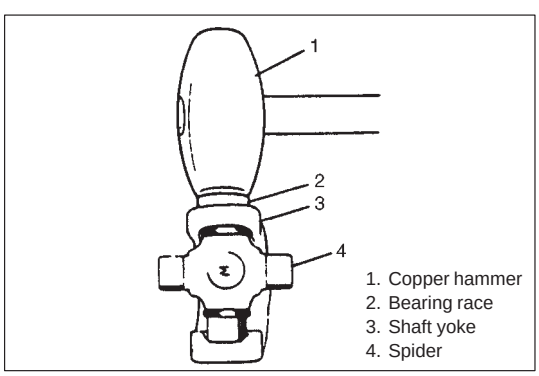

1. Copper hammer
2. Bearing race
3. Shaft yoke
4. Spider

2) With spider inserted into bearing race to prevent rollers in race from coming out, insert bearing race into shaft yoke until it is flush with side face of shaft yoke, tapping it by a copper hammer.

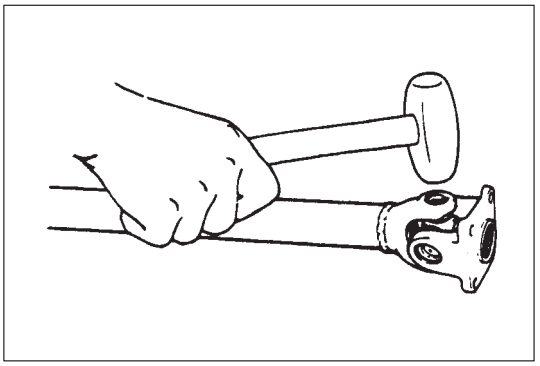

3) Insert bearing race into opposite side of shaft yoke until it is flush with side face of shaft yoke, tapping it by a copper hammer.
4) In the same way as Step 2) to Step 3), insert bearing races into flange yoke.

5) Using round bar of 22 – 24 mm (0.87 in. – 0.94 in.) in diameter and hammer, tap bearing races into shaft or flange yoke until circlips can be installed in its groove on yoke bores.
6) Install 4 circlips in each groove on shaft and flange yoke bores.

NOTE:
- **After reassembly, ensure that both shaft yoke and flange yoke move smoothly.**
- **Make sure that each circlip is fitted in groove securely.**

TIGHTENING TORQUE SPECIFICATION

Fastener	Tightening torque		
	N·m	kg-m	lb-ft
Propeller shaft bolt (propeller shaft No.1 No.2 and No.3 rear differential side)	50	5.0	36.5
Propeller shaft bolt (propeller shaft No.3 transfer case side)	33	3.3	24

REQUIRED SERVICE MATERIAL

MATERIAL	RECOMMENDED SUZUKI PRODUCT	USE
Lithium grease	SUPER GREASE C (99000-25030)	To apply to spider bearing race.

SPECIAL TOOL

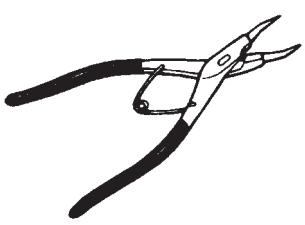 09900-06108 Snap ring pliers (Closing type)	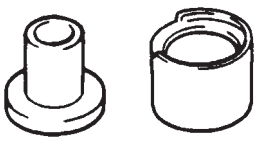 09926-48010 Universal joint disassembling tool set

SECTION 5

BRAKES

WARNING:
For lifting point of vehicle, refer to SECTION 0A.

WARNING:
For vehicles equipped with Supplement Restraint (Air Bag) System:

- **Service on and around the air bag system components or wiring must be performed only by an authorized SUZUKI dealer. Refer to "Air Bag System Components and Wiring Location View" under "General Description" in air bag system section in order to confirm whether you are performing service on or near the air bag system components or wiring. Please observe all WARNINGS and "Service Precautions" under "On-Vehicle Service" in air bag system section before performing service on or around the air bag system components or wiring. Failure to follow WARNINGS could result in unintentional activation of the system or could render the system inoperative. Either of these two conditions may result in severe injury.**
- **Technical service work must be started at least 90 seconds after the ignition switch is turned to the "LOCK" position and the negative cable is disconnected from the battery. Otherwise, the system may be activated by reserve energy in the Sensing and Diagnostic Module (SDM).**

NOTE:

- **When inspecting and servicing vehicle equipped with ABS, be sure to refer to section 5E first.**
- **All brake fasteners are important attaching parts in that they could affect the performance of vital parts and systems, and/or could result in major repair expense. They must be replaced with one of same part number or with an equivalent part if replacement becomes necessary. Do not use a replacement part of lesser quality or substitute design. Torque values must be used as specified during reassembly to assure proper retention of all parts. There is to be no welding as it may result in extensive damage and weakening of the metal.**

CONTENTS

GENERAL DESCRIPTION 5- 3
Front Disc Brake Caliper Assembly 5- 4
Rear Drum Brake Assembly 5- 5
Master Cylinder Assembly 5- 6
Booster Assembly 5- 6
LSPV Assembly 5- 7
P & Differential Valve 5- 7
DIAGNOSIS 5- 8
Road Testing Brakes 5- 8
Brake Fluid Leaks 5- 8
Substandard or Contaminated Brake Fluid 5- 8
Diagnosis Table 5- 9
ON-VEHICLE SERVICE 5-12
Brake Pedal Free Height Adjustment 5-12
Stop Light Switch Adjustment 5-12
Excessive Pedal Travel Check 5-12
Front Brake Disc Inspection 5-13
Front Brake Pad Lining Inspection 5-13
Rear Brake Shoe Inspection 5-13
Brake Pedal Play Inspection 5-14
Master Cylinder Inspection 5-14
Rear Drum Brake Shoe Adjustment 5-14
Parking Brake Inspection and Adjustment 5-14
Flushing Brake Hydraulic System 5-15
Bleeding Brakes 5-16
Brake Hose and Pipe Inspection 5-17
Brake Fluid Level Inspection 5-18

BRAKE HOSE/PIPE R & I 5-19
Remove and Install Front Brake Hose/Pipe 5-19
Remove and Install Rear Brake Hose/Pipe 5-20
PARKING BRAKE LEVER/CABLE R & I 5-21
Remove and Install Parking Brake Lever .. 5-21
Remove and Install Parking Brake Cable . 5-22
FRONT DISC BRAKE R & I 5-23
Remove and Install Pad 5-23
Remove and Install Caliper Assembly 5-24
Remove and Install Seal, Piston, Dust Boot and Bleeder Plug 5-25
Remove and Install Disc 5-27
FRONT DISC BRAKE INSPECTION 5-28
Inspect Brake Pad Lining 5-28
Inspect Brake Caliper Inner Parts 5-28
Inspect Brake Disc 5-29
DRUM AND COMPONENTS R & I 5-30
Remove and Install Brake Drum 5-30
Remove and Install Brake Shoe 5-31
Remove and Install Wheel Cylinder 5-32
Remove and Install Brake Back Plate 5-33
BRAKE DRUM AND COMPONENTS INSPECTION 5-34
Inspect Brake Drum 5-34
Inspect Brake Shoe & Lining 5-35
Inspect Wheel Cylinder 5-35
Inspect Parking Shoe Lever 5-35
Inspect Springs and Rod Assembly 5-35
Inspect Springs 5-35
MASTER CYLINDER REPAIR 5-36
Remove and Install Master Cylinder Reservoir 5-36
Remove and Install Master Cylinder Assembly 5-38
Disassemble and Assemble Master Cylinder 5-39
MASTER CYLINDER INSPECTION 5-41
Inspect Master Cylinder 5-41
Fill Reservoir 5-41
LSPV (Load Sencing Proportioning Valve) R & I 5-42
Remove and Install LSPV 5-42
After-Installation Inspection & Adjustment 5-43
Fluid Pressure Test 5-44
P (Proportioning) & Differential Valve R & I .. 5-46
Remove and Install P & Differential Valve . 5-46
Inspect Differential Switch 5-46
BRAKE BOOSTER REPAIR 5-47
Remove and Install Booster 5-47
BRAKE BOOSTER INSPECTION AND ADJUSTMENT 5-49
Booster Pash Rod Clevis Adjustment 5-49
Inspect/Adjust Clearance Between Booster Piston Rod and Master Cylinder Piston 5-49
Inspect Booster Operation 5-50
TIGHTENING TORQUE SPECIFICATIONS ... 5-52
REQUIRED SERVICE MATERIALS 5-52
SPECIAL TOOLS 5-53

GENERAL DESCRIPTION

When the foot brake pedal is depressed, hydraulic pressure is developed in the master cylinder to actuate pistons (two in front and four in rear).
The master cylinder is a tandem master cylinder. Three (or two) brake pipes are connected to the master cylinder and they make two independent circuits. One connects front brakes (right and left) and the other connects rear brakes (right and left).
The load sensing proportioning valve (LSPV), the proportioning and bypass (P & B) valve or proportioning (P) & Differential valve is included in these circuits between the master cylinder and the rear brake.
In this brake system, the disc brake type is used for the front wheel brake and a drum brake type (leading/trailing shoes) for the rear wheel brake.
The parking brake system is mechanical. It applies brake force to only rear wheels by means of the cable and mechanical linkage system. The same brake shoes are used for both parking and foot brakes.

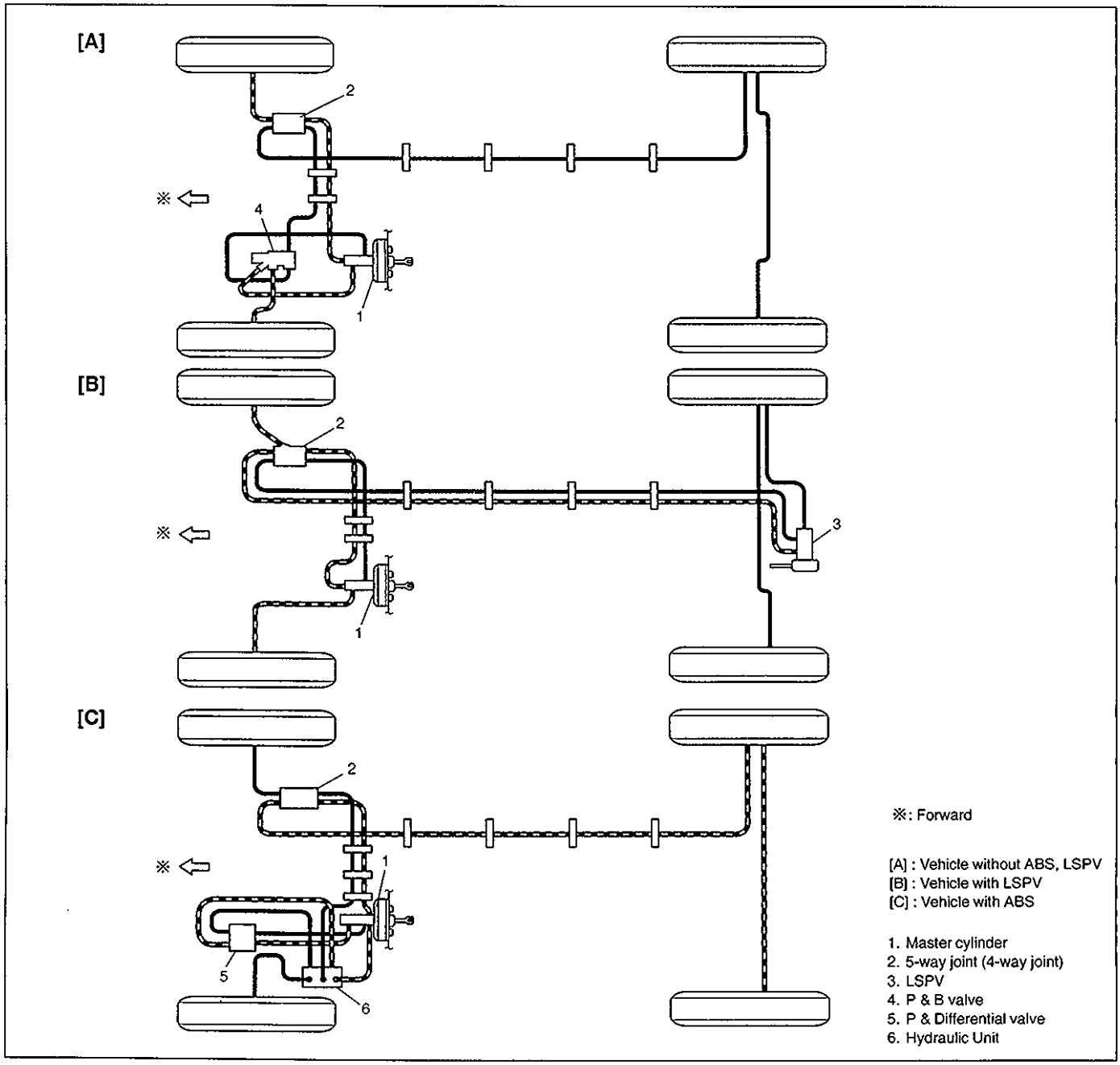

FRONT DISC BRAKE CALIPER ASSEMBLY

GENERAL DESCRIPTION

This caliper has a single 51.1 mm (2.012 in.) bore and is mounted to the brake caliper carrier with two caliper pin bolts. Hydraulic force, created by applying force to the brake pedal, is converted by the caliper to friction. The hydraulic force acts equally against the piston and the bottom of the caliper bore to move the piston outward and to move (slide) the caliper inward, resulting in a clamping action on the disc. This clamping action forces the pads (linings) against the disc, creating friction to stop the vehicle.

NOTE:

Lubricate parts as specified. Do not use lubricated shop air on brake parts as damage to rubber components may result. If any component is removed or line disconnected, bleed the brake system.
Replace pads in axle sets only. The torque values specified are for dry, unlubricated fasteners.

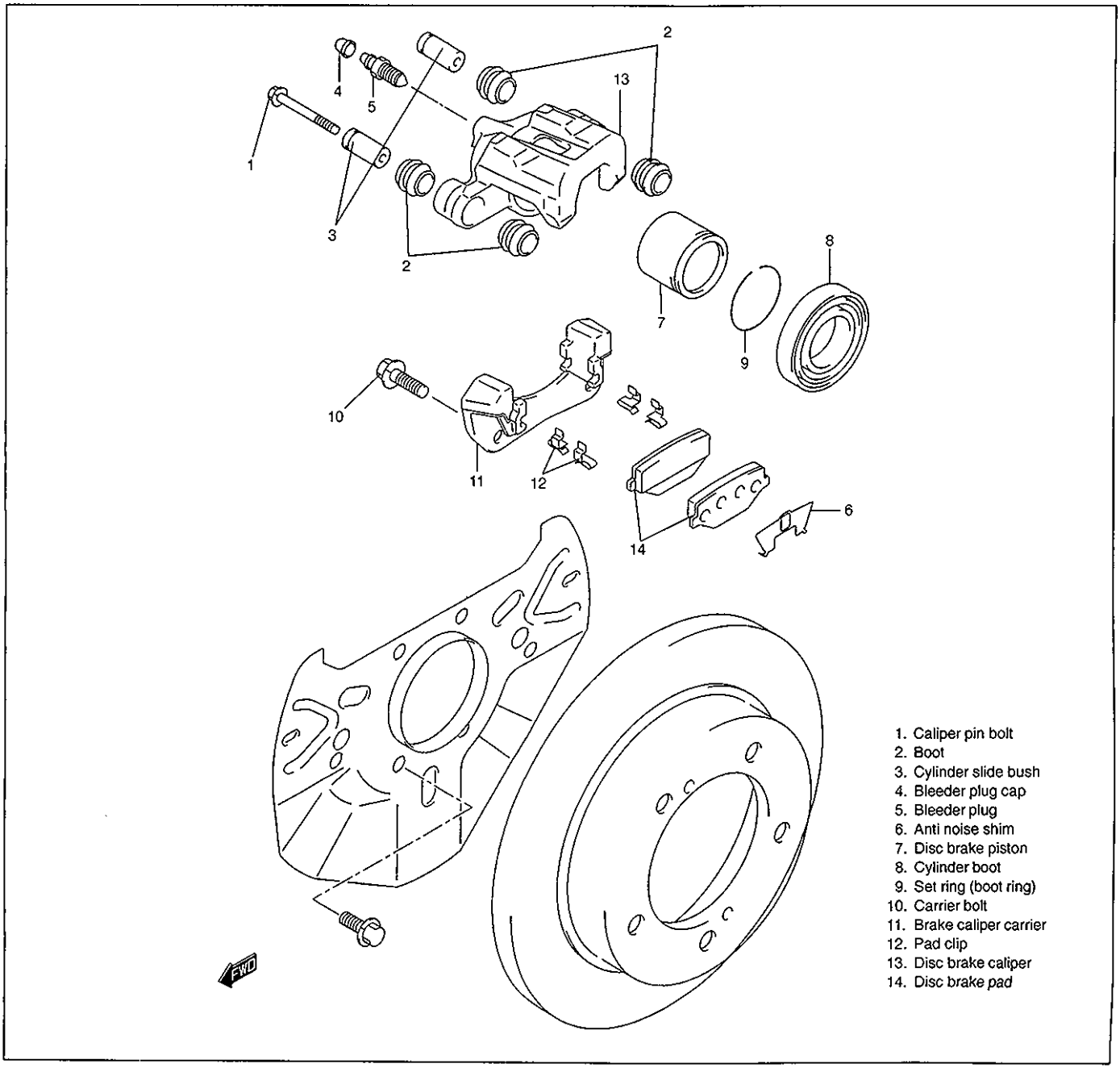

1. Caliper pin bolt
2. Boot
3. Cylinder slide bush
4. Bleeder plug cap
5. Bleeder plug
6. Anti noise shim
7. Disc brake piston
8. Cylinder boot
9. Set ring (boot ring)
10. Carrier bolt
11. Brake caliper carrier
12. Pad clip
13. Disc brake caliper
14. Disc brake pad

REAR DRUM BRAKE ASSEMBLY

GENERAL DESCRIPTION

The drum brake assembly has a self shoe clearance adjusting system so that drum-to-shoe clearance is maintained appropriate at all times.

NOTE:

Replace all components included in repair kits to service this drum brake. Lubricate parts as specified.

WARNING:

If any hydraulic component is removed or brake line disconnected, bleed the brake system. The torque values specified are for dry, unlubricated fasteners.

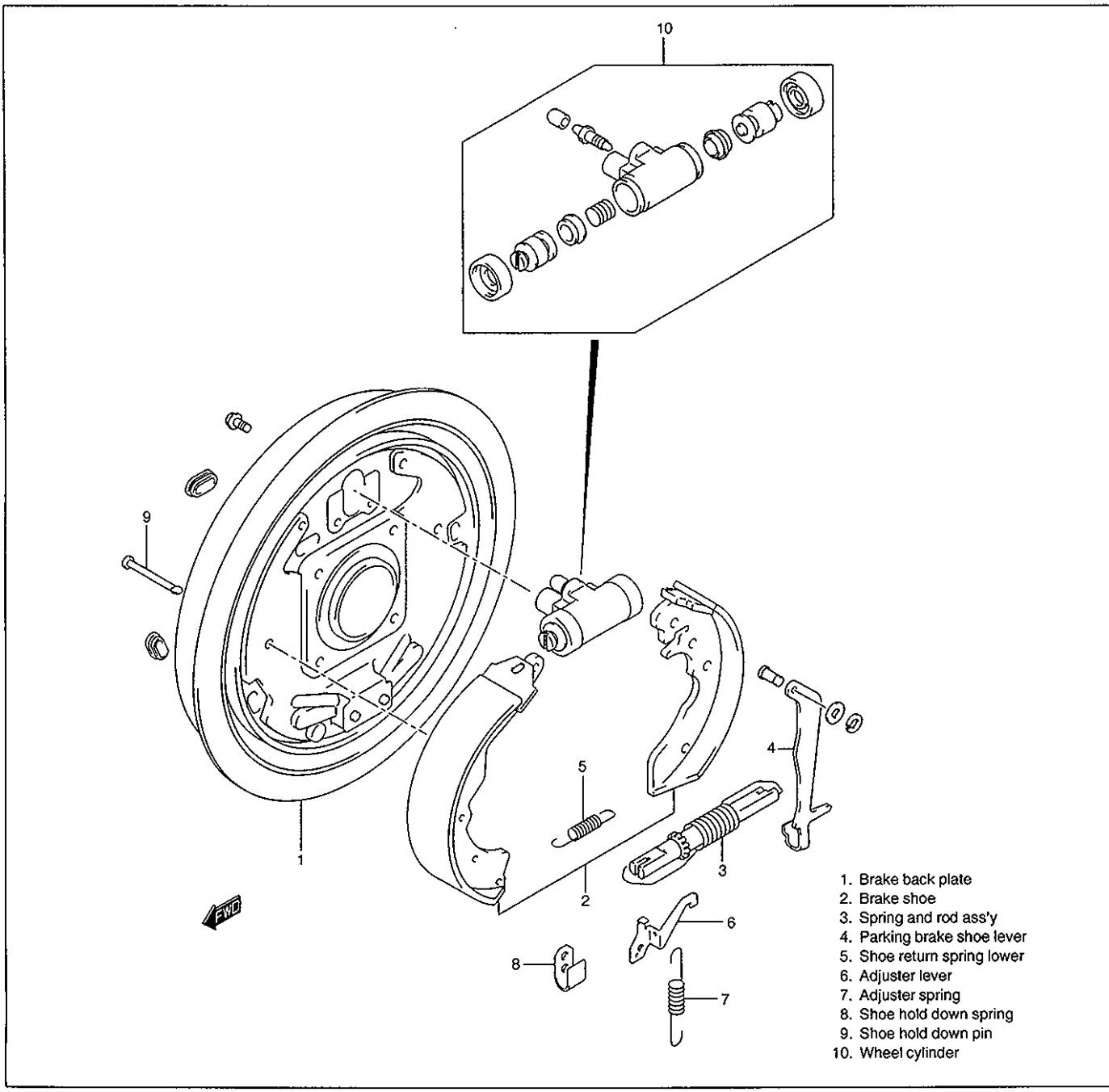

1. Brake back plate
2. Brake shoe
3. Spring and rod ass'y
4. Parking brake shoe lever
5. Shoe return spring lower
6. Adjuster lever
7. Adjuster spring
8. Shoe hold down spring
9. Shoe hold down pin
10. Wheel cylinder

MASTER CYLINDER ASSEMBLY

GENERAL DESCRIPTION

The master cylinder has two pistons and three piston cups. Its hydraulic pressure is produced in the primary ("a" in the below figure) and secondary ("b") chambers. The hydraulic pressure produced in the primary chamber ("a") acts on the rear wheel brakes (front wheel brakes, for vehicle with ABS) .
Also, the hydraulic pressure produced in the secondary chamber ("b") acts on the front wheel brakes (rear wheel brakes for vehicle with ABS).

NOTE:
Replace all components included in repair kits to service this master cylinder. Lubricate rubber parts with clean, fresh brake fluid to ease assembly. Do not use lubricated shop air on brake parts as damage to rubber components may result. If any hydraulic component is removed or brake line disconnected, bleed the brake system. The torque values specified are for dry, unlubricated fasteners.

[A]

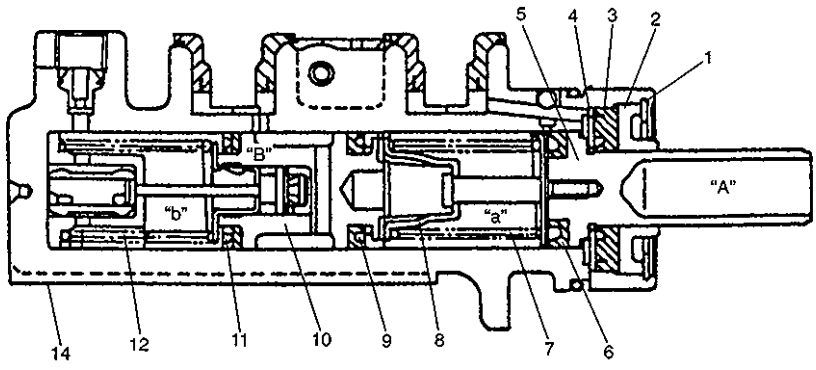

[B]

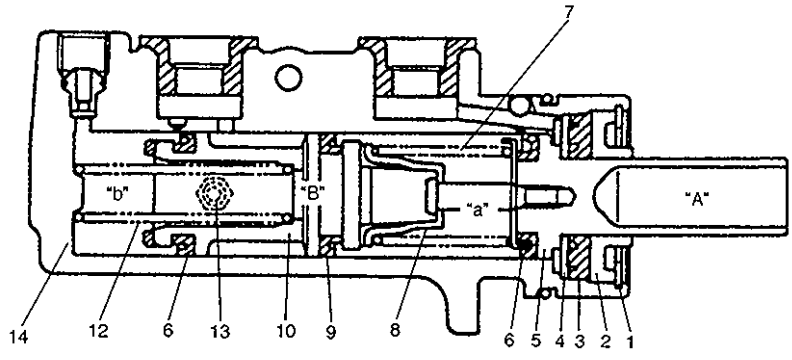

[A] : with ABS
[B] : without ABS

1. Piston stopper circlip
2. Piston stopper
3. Cylinder cup
4. Plate
5. Primary piston
6. Piston cup
7. Primary piston return spring
8. Primary spring retainer
9. Secondary piston pressure cup
10. Secondary piston
11. Return spring secondary seat
12. Secondary piston return spring
13. Secondary piston stopper bolt
14. Master cylinder body

"A": Primary piston
"B": Secondary piston

BOOSTER ASSEMBLY

GENERAL DESCRIPTION

The booster is located between the master cylinder and the brake pedal. It is so designed that the force created when the brake pedal is depressed is mechanically increased combined with the engine vacuum. The booster has a diaphragm of ϕ) 8 in (203 mm) effective diameter.

CAUTION:
When and after removing booster, never drop, deform or disassemble it.

LSPV (Load Sensing Proportioning Valve) ASSEMBLY

GENERAL DESCRIPTION

As shown in figure below, LSPV is included within the brake circuit which connects the master cylinder and the rear wheel brake. It controls the hydraulic pressure applied to the rear wheel brake according to the loaded state of the vehicle (or weight of the load), whereby preventing the rear wheels from getting locked prematurely.
Also, it releases the above described control over the hydraulic pressure applied to the rear wheel brake, should any failure occur in the hydraulic circuit of the front wheel brake so that the hydraulic pressure produced in the master cylinder is applied to the rear wheel brake directly to operate it.

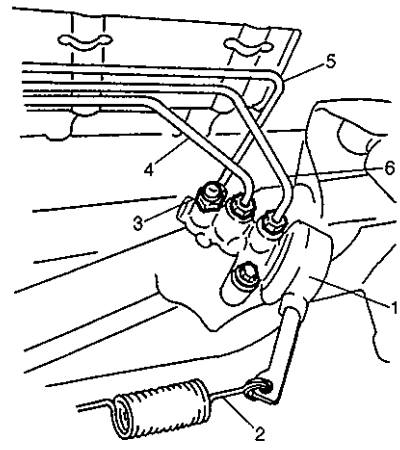

1. LSPV assembly
2. Spring
3. Bleeder plug
4. To rear wheel cylinder
5. From master cylinder secondary chamber
6. From master cylinder primary chamber

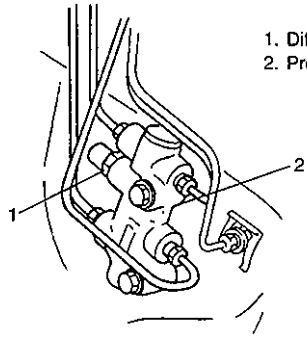

1. Differential switch
2. Proportioning valve

P (Proportioning) & DIFFERENTIAL VALVE

STRUCTURE OF P & DIFFERENTIAL VALVE

The P & Differential valve consists of a proportioning valve and differential switch.
When the front brake line fails (when bleeding fluid from the brake line), the bypass line is opened to stop the proportioning valve so as to increase effect of the rear brake.

DIAGNOSIS

ROAD TESTING BRAKES

Brakes should be tested on dry, clean, smooth and reasonably level roadway which is not crowned. Road test brakes by making brake applications with both light and heavy pedal forces at various speeds to determine if the vehicle stops evenly and effectively.
Also drive vehicle to see if it leads to one side or the other without brake application. If it does, check the tire pressure, front end alignment and front suspension attachments for looseness. See diagnosis table for other causes.

BRAKE FLUID LEAKS

Check the master cylinder fluid levels. While a slight drop in reservoir level does result from normal lining wear, an abnormally low level indicates a leak in the system. In such a case,check the entire brake system for leakage. If even a slight evidence of leakage is noted, the cause should be corrected or defective parts should be replaced.
If fluid level is lower than the minimum level of reservoir, refilling is necessary. Fill reservoir with specified brake fluid.

Brake fluid: Refer to reservoir tank cap.

CAUTION:
Since brake system of this vehicle is factory-filled with brake fluid indicated on reservoir tank cap, do not use or mix different type of fluid when refilling; otherwise serious damage will occur.
Do not use old or used brake fluid, or any fluid from a unsealed container.

SUBSTANDARD OR CONTAMINATED BRAKE FLUID

Improper brake fluid, mineral oil or water in the fluid may cause the brake fluid to boil or the rubber components in the hydraulic system to deteriorate.

If primary piston cups are swollen, then rubber parts have deteriorated. This deterioration may also be evidenced by swollen wheel cylinder piston cups on the drum brake wheels.

If deterioration of rubber is evident, disassemble all hydraulic parts and wash with alcohol. Dry these parts with compressed air before assembly to keep alcohol out of the system. Replace all rubber parts in the system, including hoses. Also, when working on the brake mechanisms, check for fluid on the linings. If excessive fluid is found, replace the linings.

If master cylinder piston seals are satisfactory, check for leakage or excessive heat conditions. If condition is not found, drain fluid, flush with brake fluid, refill and bleed the system.

The system must be flushed if there is any doubt as to the grade of fluid in the system or if fluid has been used which contained parts that have been subjected to contaminated fluid.

DIAGNOSIS TABLE

Condition	Possible Cause	Correction
Not enough braking force	• Brake oil leakage from brake lines.	Locate leaking point and repair.
	• Brake disc or pads stained with oil.	Clean or replace.
	• Overheated brakes.	Determine cause and repair.
	• Poor contact of shoes on brake drum.	Repair for proper contact.
	• Brake shoes linings stained with oil or wet with water.	Replace
	• Badly worn brake shoe linings.	Replace.
	• Defective wheel cylinders.	Repair or replace.
	• Malfunctioning caliper assembly.	Repair or replace.
	• Air in system.	Bleed system.
	• Maladjusted sensor spring length of LSPV.	Check or adjust.
	• Broken sensor spring of LSPV.	Replace.
	• Defective collar of LSPV.	Replace.
	• Malfunctioning ABS (Antilock brake system), if equipped.	Check system and replace as necessary.
Brake pull (Brakes not working in unison)	• Pad or shoe linings are wet with water or stained with oil in some brakes.	Replace.
	• Drum-to-shoe clearance out of adjustment in some brakes. (Malfunctioning auto adjusting mechanism).	Check for inoperative auto adjusting mechanism.
	• Drum is out of round in some brakes.	Replace.
	• Wheel tires are inflated unequally.	Inflate equally.
	• Malfunctioning wheel cylinders.	Repair or replace.
	• Disturbed front end alignment.	Adjust as prescribed.
	• Unmatched tires on same axle.	Tires with approximately the same amount of tread should be used on the same axle.
	• Restricted brake tubes or hoses.	Check for soft hoses and damaged lines. Replace with new hoses and new double-walled steel brake tubing.
	• Malfunctioning caliper assembly.	Check for stuck or sluggish pistons and proper lubrication of caliper slide bush.
	• Loose suspension parts.	Caliper should slide. Check all suspension mountings.
	• Loose calipers.	Check and torque bolts to specifications.
Noise (high pitched squeak without brake applied)	• Front lining worn out.	Replace linings.
Rear brake locked prematurely	• Maladjusted sensor spring length of LSPV.	Check or adjust.
	• Malfunctioning LSPV assembly.	Replace assembly.
Brake locked (For vehicles equipped with ABS)	• Malfunctioning ABS, if equipped	Check system and replace as necessary.

Condition	Possible Cause	Correction
Excessive pedal travel (Pedal stroke too large)	• Partial brake system failure.	Check brake systems and repair as necessary.
	• Insufficient fluid in master cylinder reservoirs.	Fill reservoirs with approved brake fluid. Check for leaks and air in brake systems. Check warning light. Bleed system if required.
	• Air in system. (pedal soft/spongy).	Bleed system.
	• Rear brake system not adjusted (malfunctioning auto adjusting mechanism).	Repair auto adjusting mechanism. Adjust rear brakes.
	• Bent brake shoes.	Replace brake shoes.
	• Worn rear brake shoes.	Replace brake shoes.
Dragging brakes (A very light drag is present in all disc brakes immediately after pedal is released)	• Master cylinder pistons not returning correctly.	Repair master cylinder.
	• Restricted brake tubes or hoses.	Check for soft hoses or damaged tubes and replace with new hoses and/or new brake tubes.
	• Incorrect parking brake adjustment on rear brakes.	Check and adjust to correct specifications.
	• Weakened or broken return springs in the brake.	Replace.
	• Sluggish parking-brake cables or linkage.	Repair or replace.
	• Wheel cylinder or caliper piston sticking.	Repair as necessary.
	• Malfunctioning ABS, if equipped with ABS.	Check system and replace as necessary.
Pedal pulsation (Pedal pulsates when depressed for braking.)	• Damaged or loose wheel bearings.	Replace wheel bearings.
	• Distorted steering knuckle or rear axle shafts.	Replace knuckle or rear axle shaft.
	• Excessive disc lateral runout.	Check per instructions. If not within specifications, replace or machine the disc.
	• Parallelism not within specifications.	Check per instructions. If not with specifications, replace or machine the disc.
	• Rear drums out of round.	Check runout. Repair or replace drum as necessary.
Braking noise	• Glazed shoe linings, or foreign matters stuck to linings.	Repair or replace shoe lining.
	• Worn or distorted shoe linings.	Replace shoe lining (or pad).
	• Loose front wheel bearings.	Replace wheel bearing.
	• Distorted backing plates or loose mounting bolts.	Replace or retighten securing bolts.

Condition	Possible Cause	Correction
Brake warning light turns on after engine start	• Parking brake applied.	Release parking brake and check that brake warning light turns off.
	• Insufficient amount of brake fluid.	Add brake fluid.
	• Brake fluid leaking from brake line.	Investigate leaky point, correct it and add brake fluid.
	• Brake warning light circuit faulty.	Refer to "DIAGNOSIS" of ABS section.
	• Malfunctioning ABS, if equipped with ABS.	Check system referring to "DIAGNOSIS" OF ABS section.
Brake warning light turns on when brake is applied	• Brake fluid leaking from brake line.	Investigate leaky point, correct it and add brake fluid.
	• Insufficient amount of brake fluid.	Add brake fluid.
	• Faulty P & Differential valve (Differential switch).	Replace.
Brake warning light fails to turn on even when parking brake is applied	• Bulb burnt out.	Replace bulb.
	• Brake warning light circuit open.	Repair circuit.
ABS warning light does not turn on for 2 sec. after ignition switch has turned ON.	• Bulb burnt out.	Replace bulb.
	• ABS warning light circuit open, if equipped with ABS. (including check relay)	Check system referring to "DIAGNOSIS" of ABS section.
ABS warning light remains on after ignition switch has turned on for 2 sec.	• Malfunctioning ABS, if equipped with ABS.	Check system referring to "DIAGNOSIS" of ABS section.

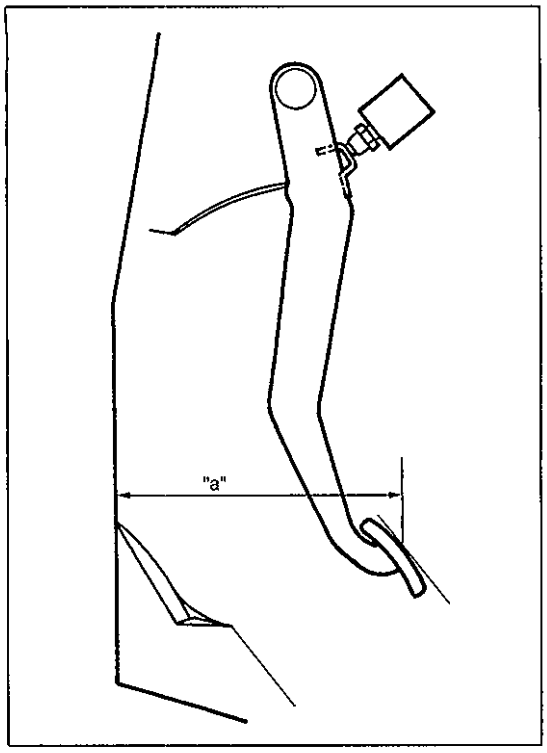

ON-VEHICLE SERVICE

BRAKE PEDAL FREE HEIGHT ADJUSTMENT

Check brake pedal free height.
If it is not within specification, check and adjust following item 1) and 2).

Brake pedal free height "a"
from wall : 221 – 227 mm (8.70 – 8.94 in.) LH steering vehicle
: 217 – 223 mm (8.54 – 8.78 in.) RH steering vehicle

1) Check measurement between booster mounting surface and center of clevis pin hole. When booster push rod clevis has been reinstalled, it is important that the measurement is adjusted. (Refer to BOOSTER PUSH ROD CLEVIS ADJUSTMENT.)
2) Check stop light switch position. Adjust it if it is out of specification.

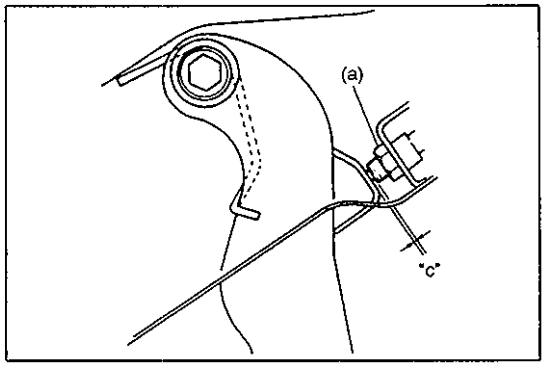

STOP LIGHT SWITCH ADJUSTMENT

Adjustment should be made as follows when installing switch. Pull up brake pedal toward you and while holding it there, adjust switch position so that clearance between end of thread and brake pedal is specified. Then tighten lock nut to specified torque.

Clearance "c": 1.5 – 2.0 mm (0.06 – 0.08 in.)

Tightening Torque
(a): 7.5 N·m (0.75 kg-m, 5.5 lb-ft)

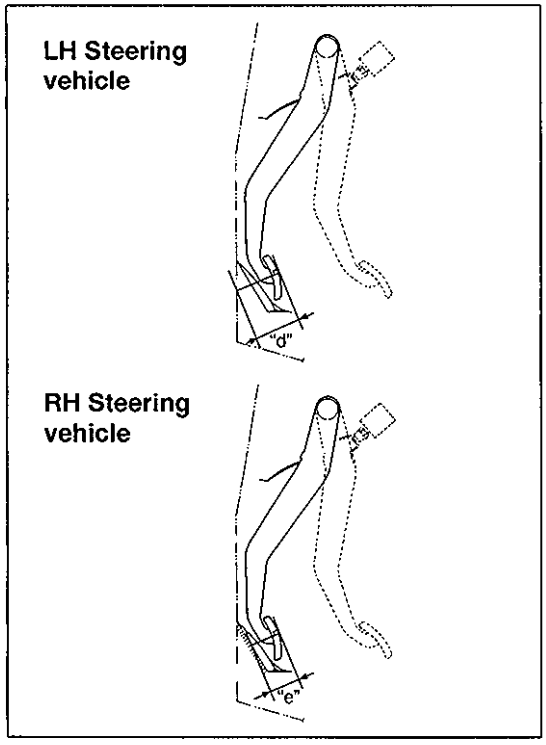

EXCESSIVE PEDAL TRAVEL CHECK

1) Start engine.
2) Depress brake pedal a few times.
3) With brake pedal depressed with approximately 30 kg (66 lbs) load, measure brake pedal to wall clearance "d".

Clearance "d": Over 55 mm (2.17 in.) (LH steering vehicle)
"e": Over 76 mm (2.99 in.) (RH steering vehicle)

4) If clearance "d" is less than specification, the most possible cause is either rear brake shoes are worn out beyond limit or air is in lines.
Should clearance "d" remain less than specification even after replacement of brake shoes and bleeding of system, other possible but infrequent cause is malfunction of rear brake shoe adjusters or booster push rod length out of adjustment.

- **See page 5-16 for bleeding brake system.**
- **Remove brake drums for adjuster inspection. If defective, correct or replace.**

FRONT BRAKE DISC INSPECTION

Refer to item "FRONT DISC BRAKE INSPECTION" of this section for inspection point and procedure.

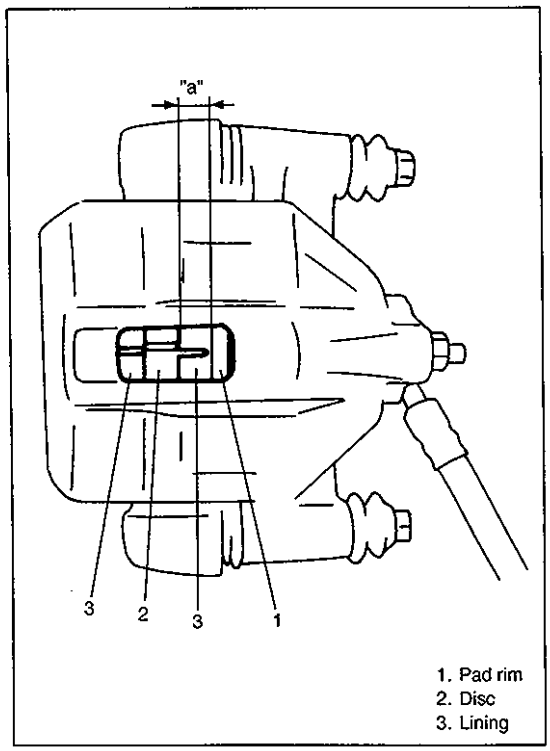

1. Pad rim
2. Disc
3. Lining

FRONT BRAKE PAD LINING INSPECTION

Inspect pad linings periodically according to maintenance schedule whenever wheels are removed (for tire rotation or other reason). Take a look through each end (or hole) of caliper and check lining thickness of outside and inside pads. If lining is worn and its thickness ("a" in figure) is less than limit, all pads must be replaced at the same time.

Thickness "a"
Service limit: 2 mm (0.08 in.)

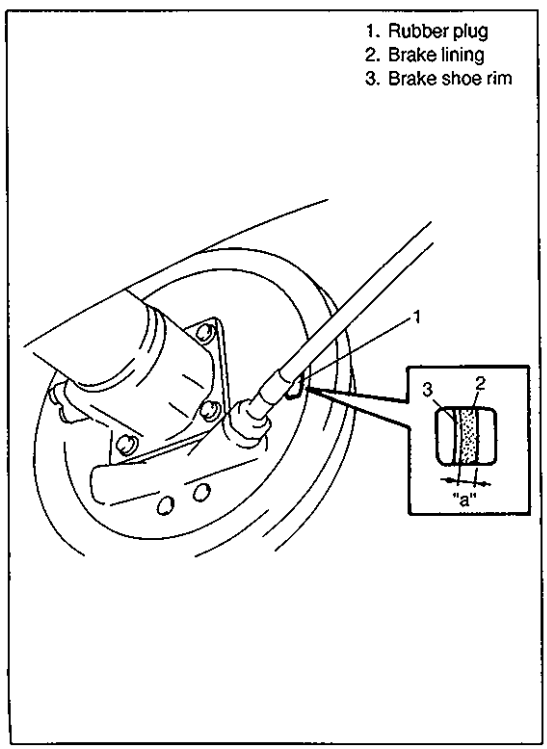

REAR BRAKE SHOE INSPECTION

Inspection should be carried out on following points after brake pedal travel (pedal to wall clearance) check, even when pedal travel is normal.

Amount of brake shoe wear can be checked as follows.

1) Hoist vehicle.
2) Remove rubber plug from brake back plate.
3) Through hole of back plate, visually check for thickness of brake shoe lining. If lining thickness "a" is found less than limit, replace all shoes with new ones at the same time.

Thickness "a"
Service Limit: 1.0 mm (0.04 in.)

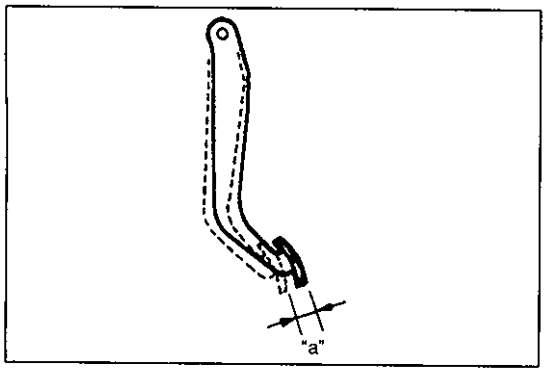

BRAKE PEDAL PLAY INSPECTION

Pedal play should be within specification below.
If out of specification, check stop light switch for proper installation position and adjust if necessary.
Also check pedal shaft bolt and master cylinder pin installation for looseness and replace if defective.

Pedal play "a": 1 – 8 mm (0.04 – 0.31 in.)

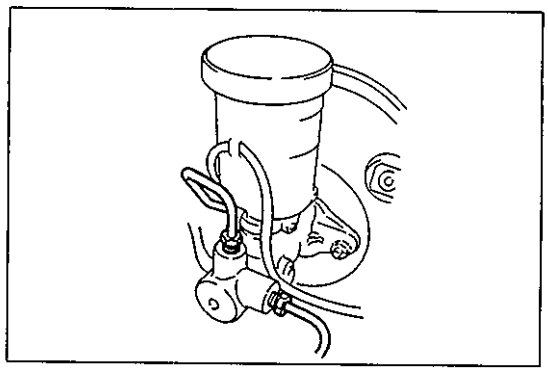

MASTER CYLINDER INSPECTION

Check for a cracked master cylinder casting or brake fluid around the master cylinder. Leaks are indicated only if there is at least a drop of fluid. A damp condition is not normal.

REAR DRUM BRAKE SHOE ADJUSTMENT

Rear brake has self-adjusting mechanism but it does require adjustment for proper drum to shoe clearance when brake shoe has been replaced or brake drum has been removed for some other service.
Adjustment is automatically accomplished by depressing brake pedal about 30 times with approximately 30 kg (66 lbs) load after all parts are installed.
Then check brake drum for dragging and brake system for proper performance. After lowering vehicle from hoist, brake test should be performed.

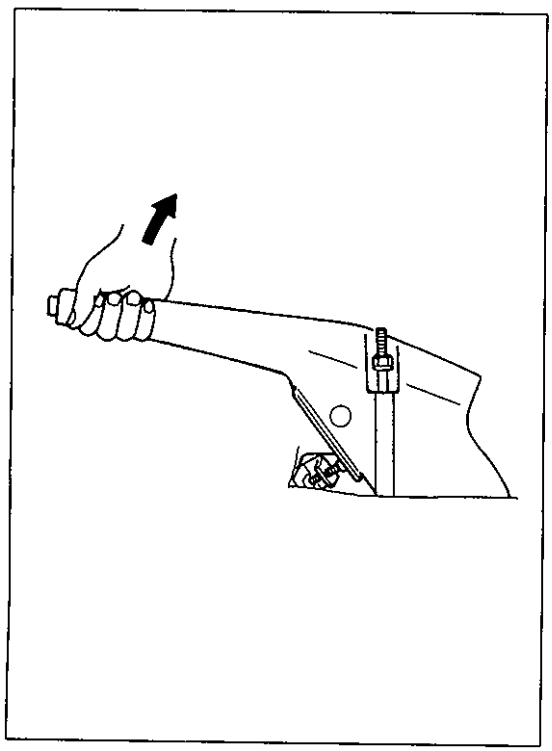

PARKING BRAKE INSPECTION AND ADJUSTMENT

Inspection

Hold center of parking brake lever grip and pull it up with 20 kg (44 lbs) force.
With parking brake lever pulled up as above, count ratchet notches. There should be 6 to 8 notches.
Also, check if both right and left rear wheels are locked firmly. To count number of notches easily, listen to click sounds that ratchet makes while pulling parking brake lever without pressing its button. One click sound corresponds to one notch.

If number of notches is out of specification, adjust cable by referring to adjustment procedure described on the following so as to obtain specified parking brake stroke.

NOTE:
Check tooth tip of each notch for damage or wear. If any damage or wear is found, replace parking brake lever.

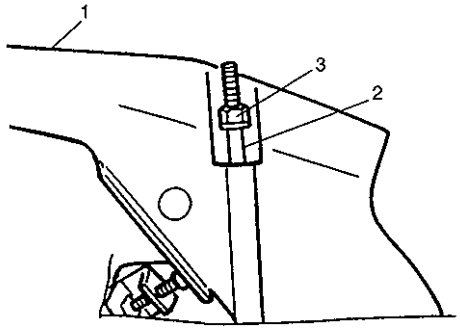

1. Parking brake lever
2. Brake cable
3. Cable adjusting nut

Adjustment

NOTE:
Make sure for following conditions before cable adjustment.
- **No air is trapped in brake system.**
- **Brake pedal travel is proper.**
- **Brake pedal has been depressed a few times with about 30 kg (66 lbs) load.**
- **Parking brake lever has been pulled up a few times with about 20 kg force.**
- **Rear brake shoes are not worn beyond limit, and self adjusting mechanism operates properly.**

After confirming that above 5 conditions are all satisfied, adjust parking brake lever stroke by loosening or tightening adjusting nut indicated in figure.

NOTE:
Check brake drum for dragging after adjustment.

Parking brake stroke: when lever is pulled up at 20 kg (44 lbs)	Within 6 – 8 notches

FLUSHING BRAKE HYDRAULIC SYSTEM

It is recommended that entire hydraulic system be thoroughly flushed with clean brake fluid whenever new parts are installed in hydraulic system.
Periodical change of brake fluid is also recommended.

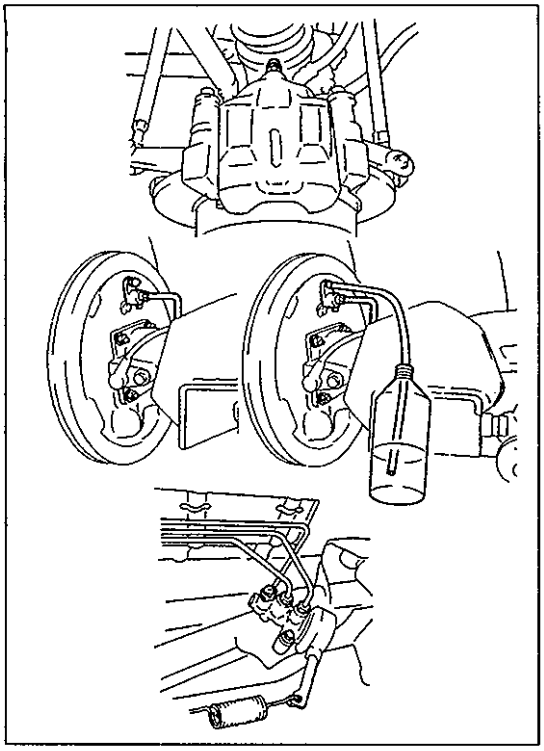

BLEEDING BRAKES

CAUTION:
Brake fluid is extremely damaging paint. If fluid should accidentally touch painted surface, immediately wipe fluid from paint and clean painted surface.

Bleeding operation is necessary to remove air whenever it entered hydraulic brake system.
Hydraulic lines of brake system consists of two separate lines, one for front wheel brakes and the other for rear wheel brakes. Air bleeding is necessary at right and left front wheel brakes, left rear wheel brake and LSPV (if equipped), i.e. 3 (4 for vehicle with LSPV) places in all.
Be sure to bleed air of brake system according to following procedure when its oil hydraulic circuit has been disconnected.

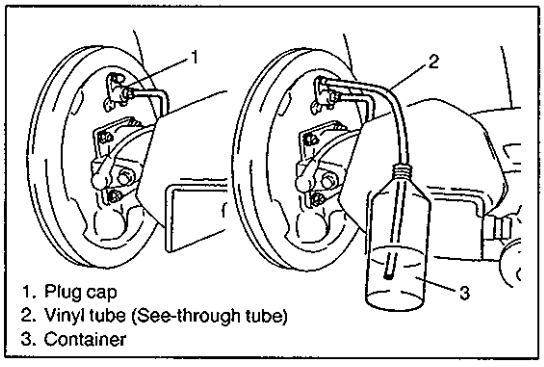

1. Plug cap
2. Vinyl tube (See-through tube)
3. Container

1) Fill master cylinder reservoir with brake fluid and keep at least one-half full of fluid during bleeding operation.
2) Remove bleeder plug cap.
   Attach a vinyl tube to bleeder plug, and insert the other end into container.

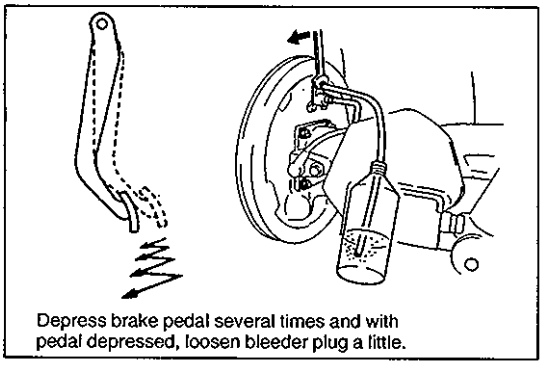

Depress brake pedal several times and with pedal depressed, loosen bleeder plug a little.

3) Depress brake pedal several times, and then while holding it depressed, loosen bleeder plug about one-third to one-half turn.

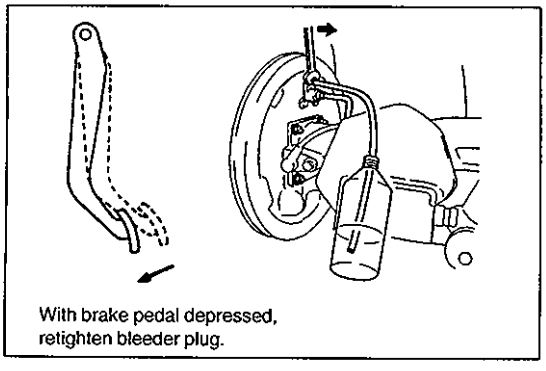

With brake pedal depressed, retighten bleeder plug.

4) When fluid pressure in the cylinder is almost depleted, retighten bleeder plug.
5) Repeat this operation until there are no more air bubbles in hydraulic line.

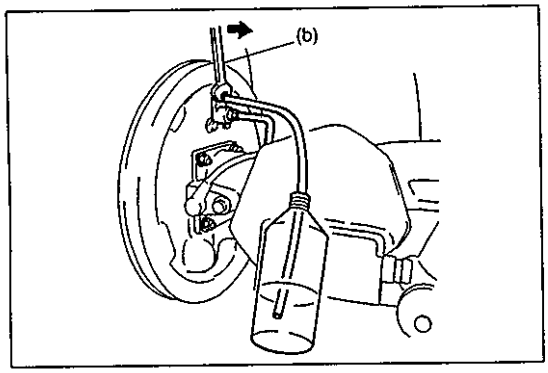

6) When bubbles stop, depress and hold brake pedal and tighten bleeder plug.
Tightening Torque
(b): 11 N·m (1.1 kg-m, 8.0 lb-ft) .... For front brake caliper
8 N·m (0.8 kg-m, 6.0 lb-ft) ..... For rear wheel cylinder and LSPV
7) Then attach bleeder plug cap.
8) After completing bleeding operation, apply fluid pressure to pipe line and check for leakage.

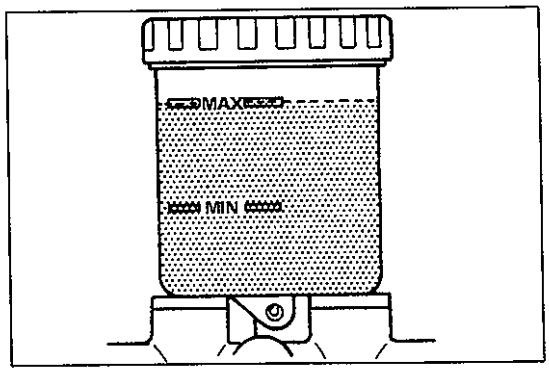

9) Replenish fluid into reservoir up to specified level.
10) Check brake pedal for "sponginess". If found spongy, repeat entire procedure of bleeding.

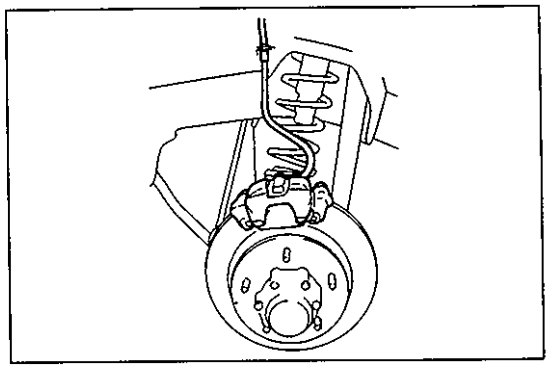

BRAKE HOSE AND PIPE INSPECTION

HOSE

The brake hose assembly should be checked for road hazard damage, for cracks and chafing of the outer cover, for leaks and blisters. A light and mirror may be needed for an adequate inspection. If any of the above conditions are observed on the brake hose, it is necessary to replace it.

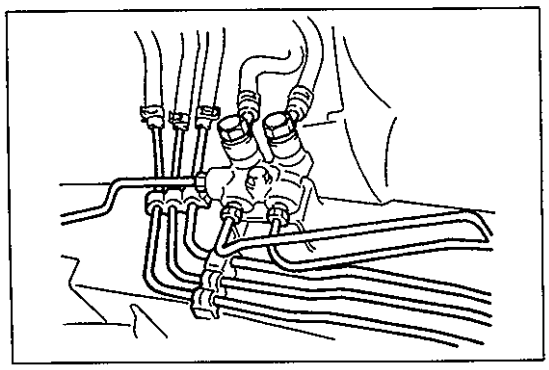

PIPE

Inspect the tube for damage, cracks, dents and corrosion. If any defect is found, replace it.

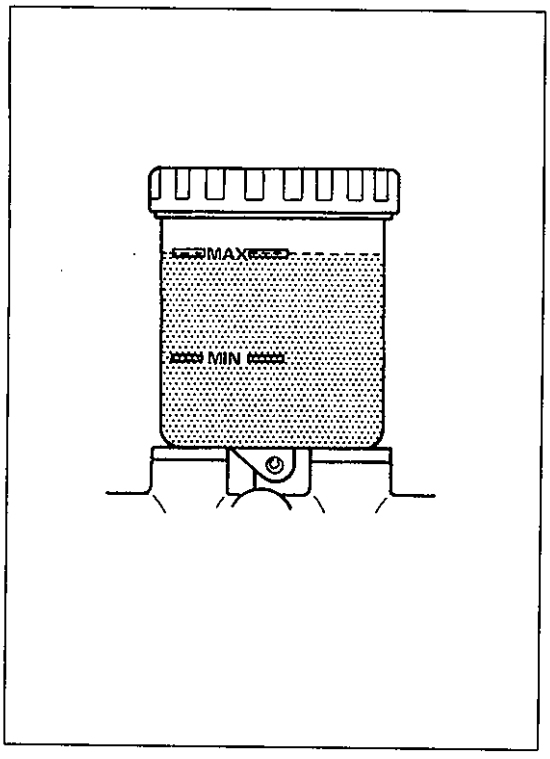

BRAKE FLUID LEVEL INSPECTION

Be sure to use particular brake fluid either as indicated on reservoir cap of that vehicle or recommended in owner's manual which comes along with that vehicle.
Use of any other fluid is strictly prohibited.
Fluid level should be between MIN and MAX lines marked on reservoir.
When warning light lights sometimes during driving, replenish fluid to MAX line.
When fluid decreases quickly, inspect brake system for leakage. Correct leaky points and then refill to specified level.

CAUTION:
Do not use shock absorber fluid or any other fluid which contains mineral oil. Do not use a container which has been used for mineral oil or a container which is wet from water. Mineral oil will cause swelling and distortion of rubber parts in hydraulic brake system and water mixed into brake fluid will lower fluid boiling point. Keep all fluid containers capped to prevent contamination.

BRAKE HOSE/PIPE R & I

REMOVE AND INSTALL FRONT BRAKE HOSE/PIPE

REMOVAL

1) Raise, suitably support vehicle. Remove wheel if necessary.
2) Clean dirt and foreign material from both hose end or pipe end fittings. Remove brake hose and pipe.

INSTALLATION

1) Install brake hose and pipe by reversing removal procedure, noting the following points.
   For installation, make sure that steering wheel is in straightforward position and hose has no twist or kink. Check to make sure that hose doesn't contact any part of suspension, both in extreme right and extreme left turn conditions. If it does at any point, remove and correct. Fill and maintain brake fluid level in reservoir. Bleed brake system.
2) Perform brake test and check installed part for fluid leakage.

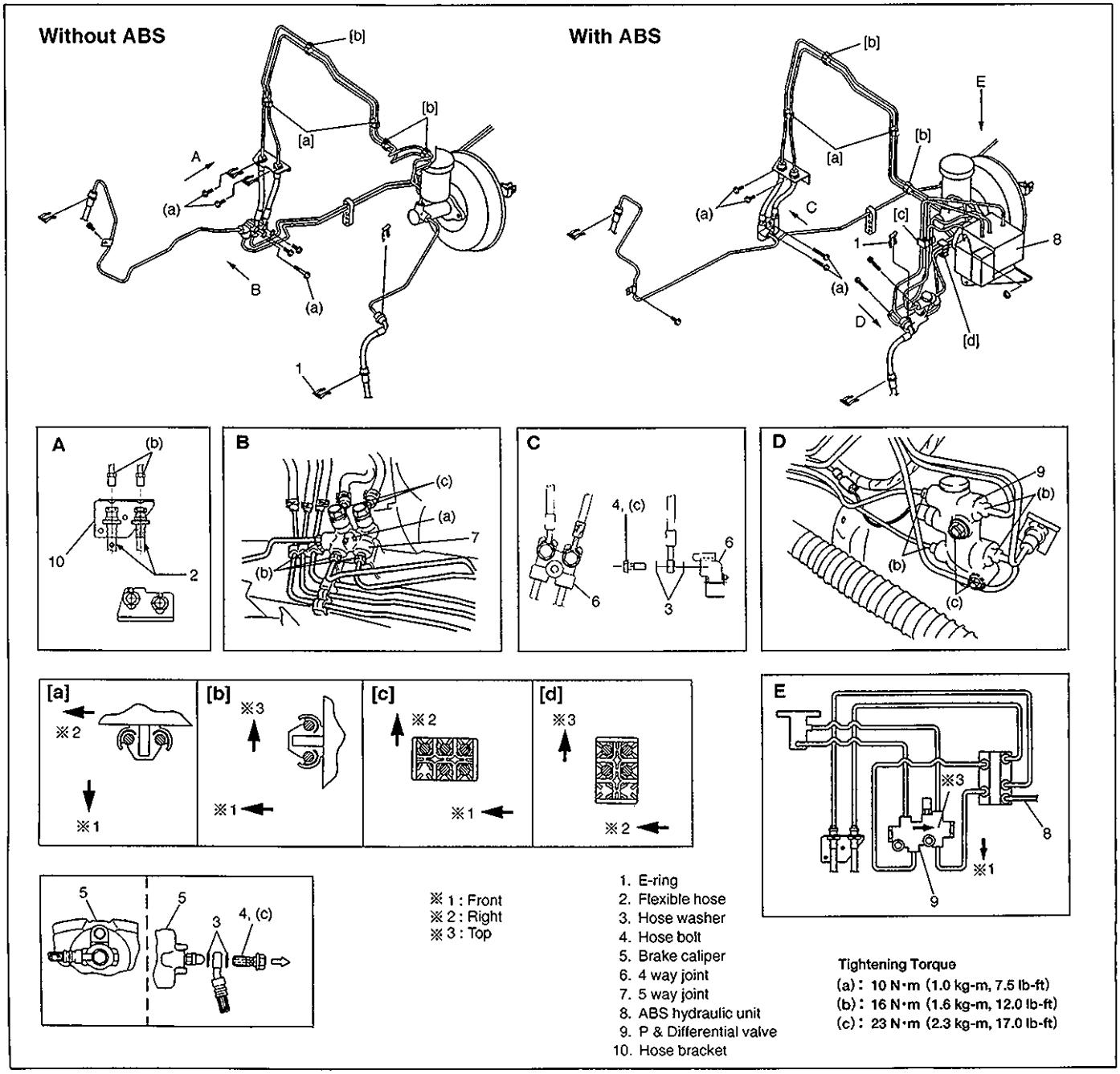

REMOVE AND INSTALL REAR BRAKE HOSE/PIPE

REMOVAL

1) Raise, suitably support vehicle. Remove wheel if necessary.
2) Clean dirt and foreign material from both hose end or pipe end fittings. Remove brake hose and pipe.

INSTALLATION

1) Install brake hose and pipe by reversing removal procedure, noting the following points.
   Fill and maintain brake fluid level in reservoir. Bleed brake system.
2) Perform brake test and check each installed part for fluid leakage.

CAUTION:

- **Position clamps to white marks on two brake pipes.**
- **Be sure to obtain more than 3 mm (0.118 in.) clearance between axle housing and brake pipe.**
- **Install clamps properly referring to figure below and tighten bolts.**
- **When installing hose, make sure that it has no twist or kink.**

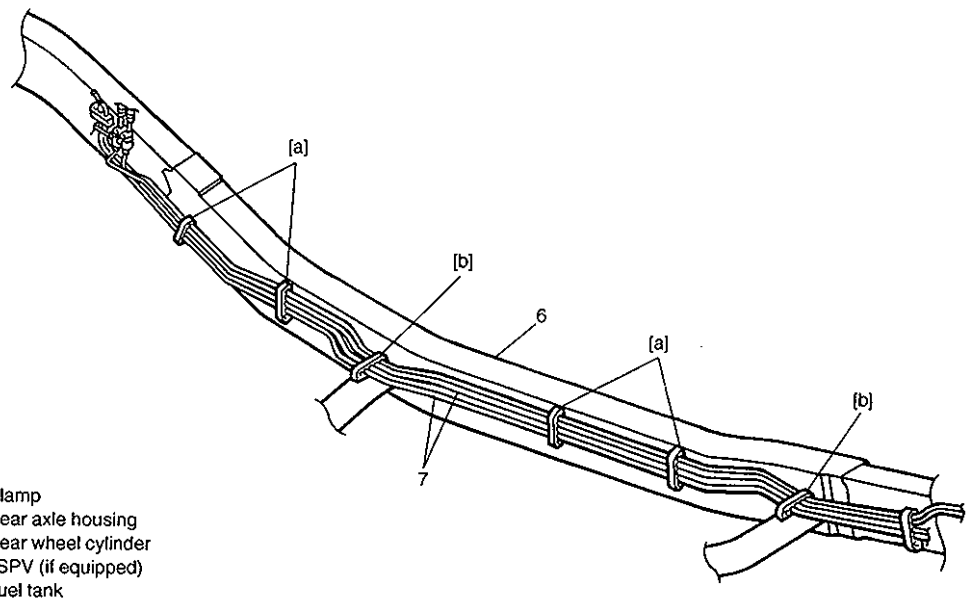

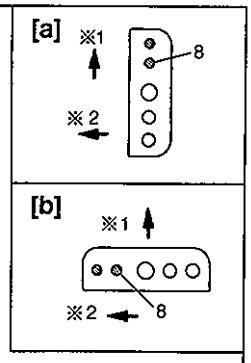

※1 : Top
※2 : Right

1. Clamp
2. Rear axle housing
3. Rear wheel cylinder
4. LSPV (if equipped)
5. Fuel tank
6. Chassis frame
7. Fuel pipe
8. Brake pipe (vehicle with LSPV)

Tightening Torque
(a) : 23 N·m (2.3 kg-m, 17.0 lb-ft)
(b) : 16 N·m (1.6 kg-m, 12.0 lb-ft)
(c) : 8 N·m (0.8 kg-m, 6.0 lb-ft)

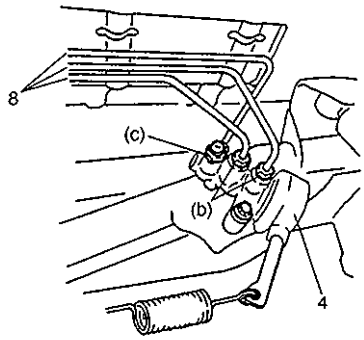

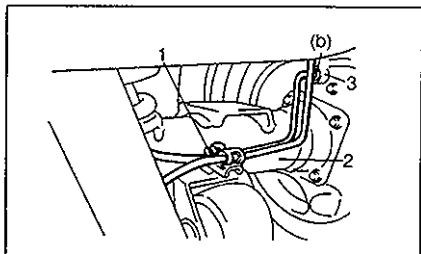

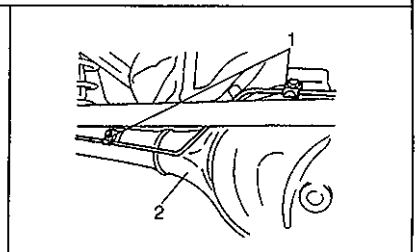

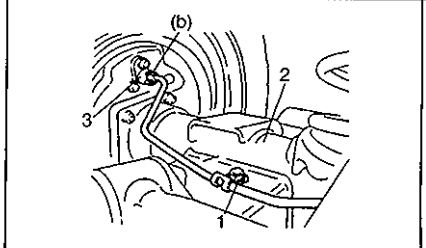

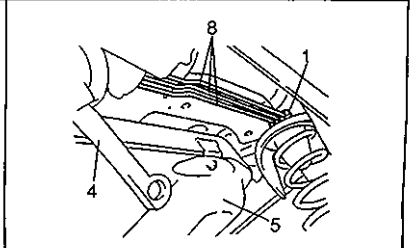

PARKING BRAKE LEVER/CABLE R & I

REMOVE AND INSTALL PARKING BRAKE LEVER

REMOVAL

1) Hoist vehicle and release parking brake lever.
2) Disconnect negative cable at battery.
3) Remove parking brake lever cover.
4) Disconnect lead wire of parking brake switch at coupler.

NOTE:
Don't disassemble parking brake lever switch. It must be removed and installed as a complete switch assembly.

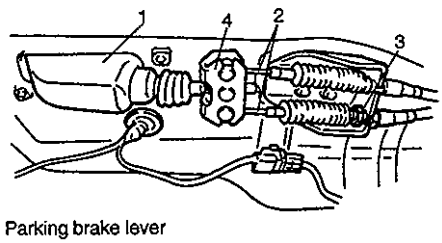

1. Parking brake lever
2. Parking brake cable
3. Bracket nut
4. Equalizer

5) Remove adjusting nut.
6) Loosen bracket nut and disconnect parking brake cables from equalizer.
7) Remove parking brake lever bolts and then remove parking brake lever assembly.

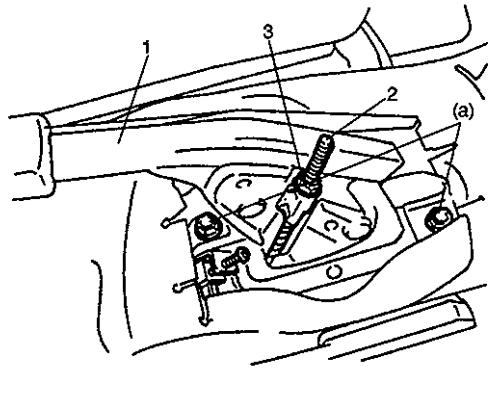

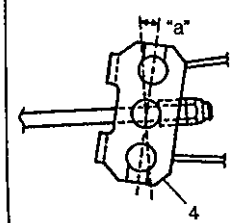

1. Parking brake lever
2. Parking brake cable
3. Adjusting nut
4. Equalizer

INSTALLATION

1) Install in reverse order of REMOVAL procedure.

Angle "a" : within 15 degrees

Tightening Torque
(a): 23 N·m (2.3 kg-m, 17.0 lb-ft)

2) After all parts are installed, parking brake lever needs to be adjusted. Refer to PARKING BRAKE INSPECTION AND ADJUSTMENT in this section.
3) Check brake drum for dragging and brake system for proper performance.

REMOVE AND INSTALL PARKING BRAKE CABLE

REMOVAL

1) Raise, suitably support vehicle and remove wheel if necessary.
2) Remove parking brake cable.

INSTALLATION

1) Install it by reversing removal procedure, noting the following points.
   - Install clamps properly referring to figure below.
   - Tighten bolts and nuts to specified torque.
2) Upon completion of installation, adjust cable. (Refer to PARKING BRAKE INSPECTION AND ADJUSTMENT of this section.) Then check brake drum for dragging and brake system for proper performance. After removing vehicle from hoist, brake test should be performed.

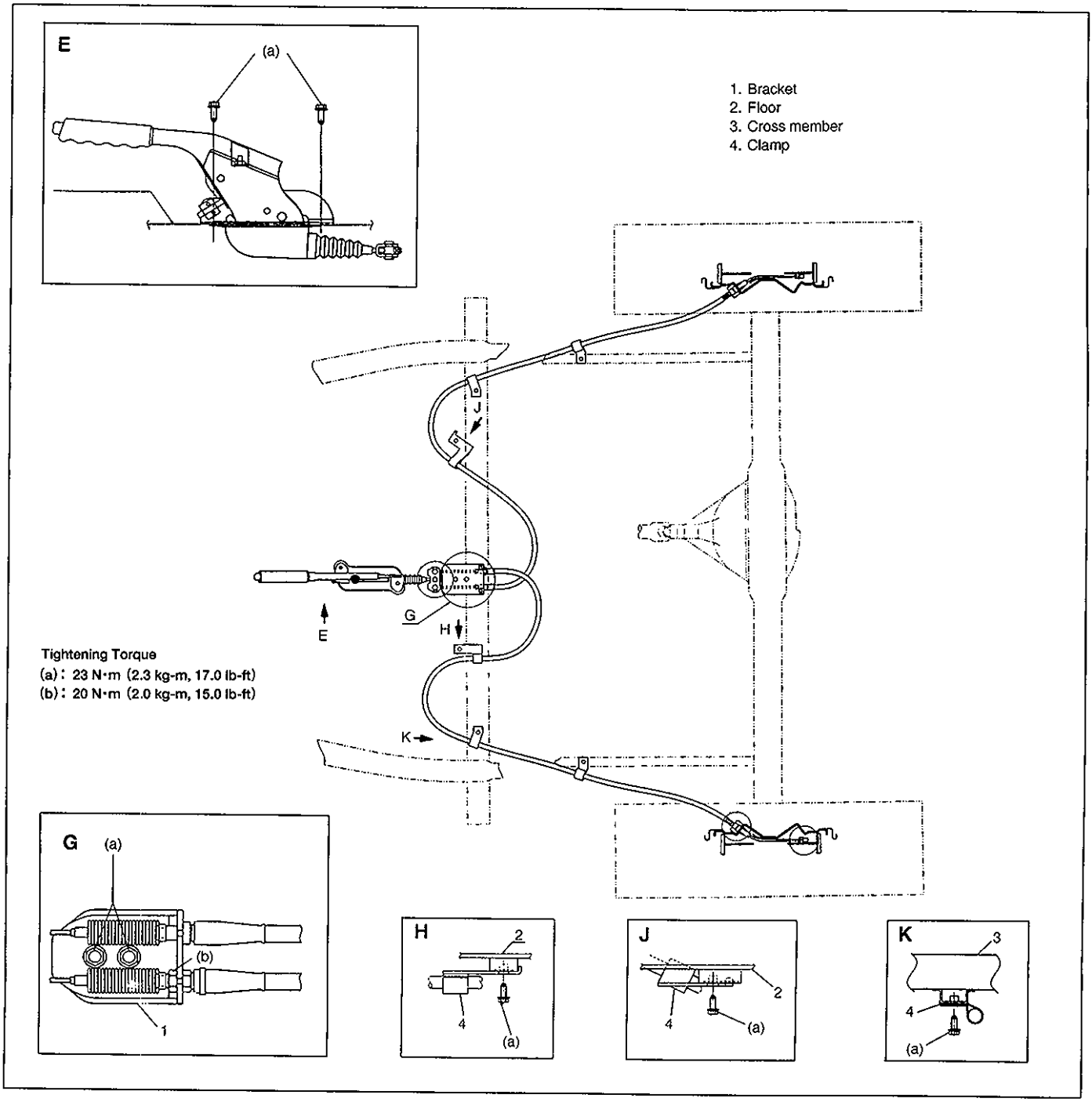

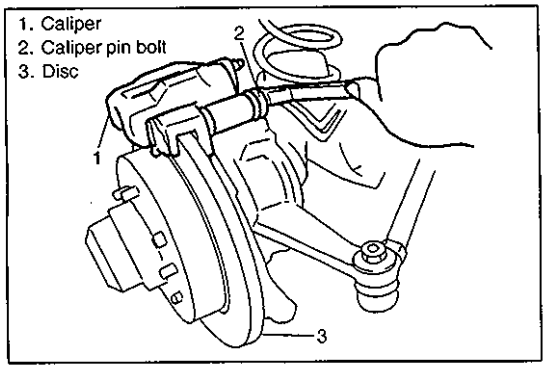

FRONT DISC BRAKE R & I

REMOVE AND INSTALL PAD

REMOVAL

1) Hoist vehicle and remove wheel.
2) Remove caliper pin bolts.

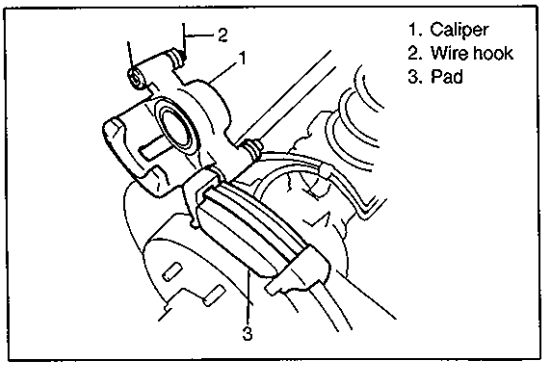

3) Remove caliper from caliper carrier.

NOTE:
Hang removed caliper with a wire hook or the like so as to prevent brake hose from bending and twisting excessively or being pulled.
Don't operate brake pedal with pads removed.

4) Remove pads.

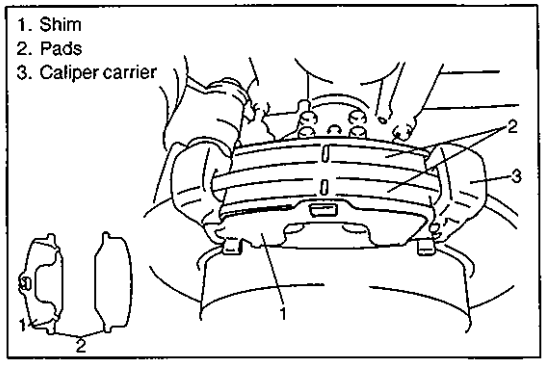

INSTALLATION

NOTE:
See NOTE at the beginning of this section.

1) Install pad shim (to outside pad) and pads to caliper carrier.

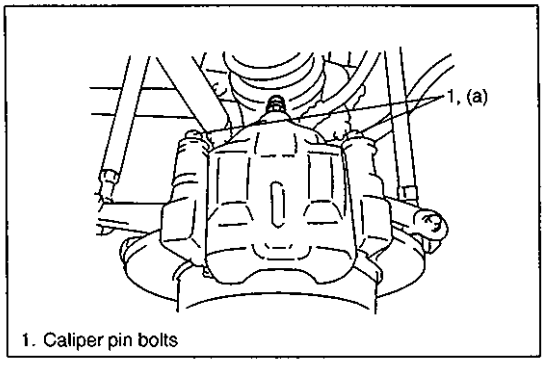

2) Install caliper and torque caliper pin bolts to specification.

NOTE:
Make sure that boots are fit into groove securely.

Tightening Torque
(a): 22 N·m (2.2 kg-m, 16.0 lb-ft)

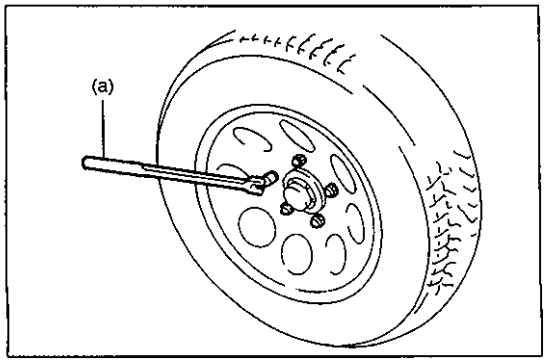

3) Install wheel and torque front wheel nuts to specification.

Tightening Torque
(a): 95 N·m (9.5 kg-m, 69.0 lb-ft)

4) Upon completion of installation, perform brake test.

REMOVE AND INSTALL CALIPER ASSEMBLY

REMOVAL

1) Hoist vehicle and remove wheel.
2) Remove brake flexible hose mounting bolt from caliper. As this will allow fluid to flow out of hose, have a container ready beforehand.

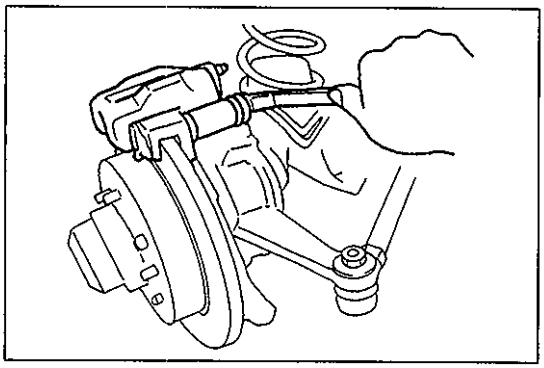

3) Remove caliper pin bolts.
4) Remove caliper from carrier.

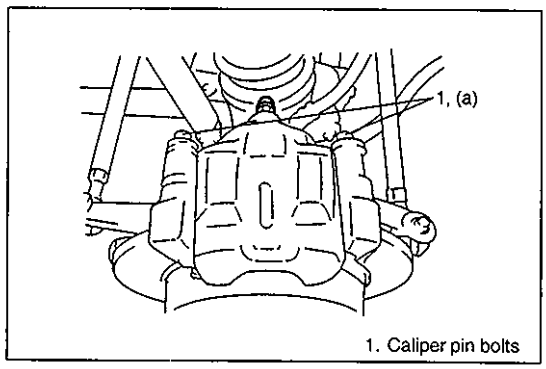

INSTALLATION

1) Install caliper to caliper carrier.
2) Torque caliper pin bolts to specification.

NOTE:
Make sure that boots are fit into groove securely.

Tightening Torque
(a): 22 N·m (2.2 kg-m, 16.0 lb-ft)

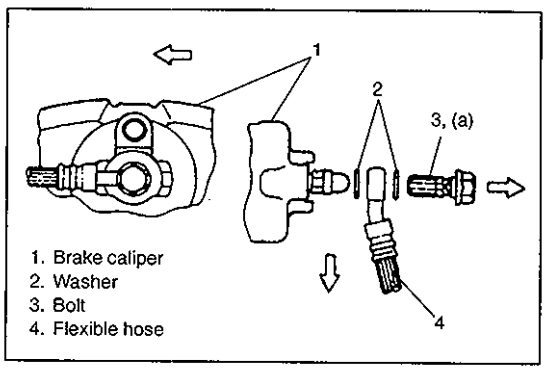

3) Install brake flexible hose as shown and torque hose mounting bolt to specification.

Tightening Torque
(a): 23 N·m (2.3 kg-m, 17.0 lb-ft)

4) Install wheel and torque wheel nuts to specification.
5) After completing installation, fill reservoir with brake fluid and bleed brake system. Perform brake test and check each installed part for oil leakage.

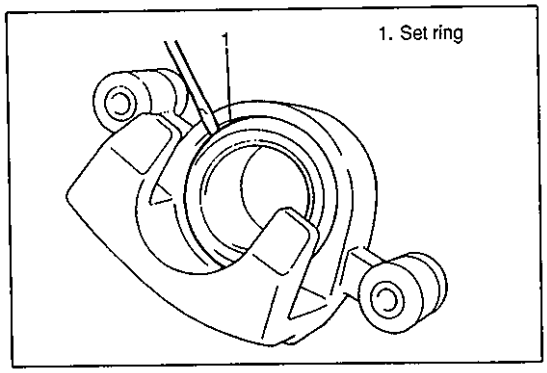

REMOVE AND INSTALL SEAL, PISTON, DUST BOOT AND BLEEDER PLUG

REMOVAL

1) Before disassembly, clean all around caliper with brake fluid.
2) Remove piston set ring and boot from caliper; pry off with a flat-bladed tool. Be careful not to damage boot.

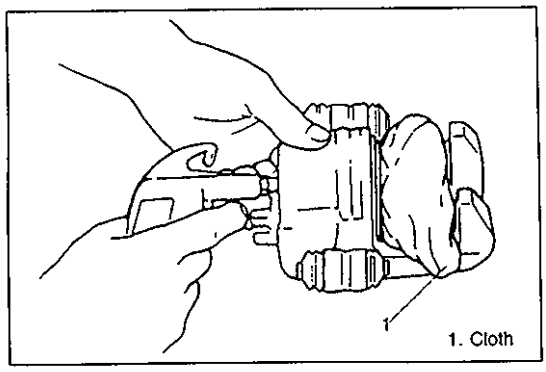

3) Blow compressed air into cylinder through bolt hole where flexible hose was fitted. With this air pressure, piston can be pushed out of cylinder.

WARNING:
Do not apply too highly compressed air which will cause piston to jump out of cylinder. It should be taken out gradually with moderately compressed air. Do not place your fingers in front of piston when using compressed air.

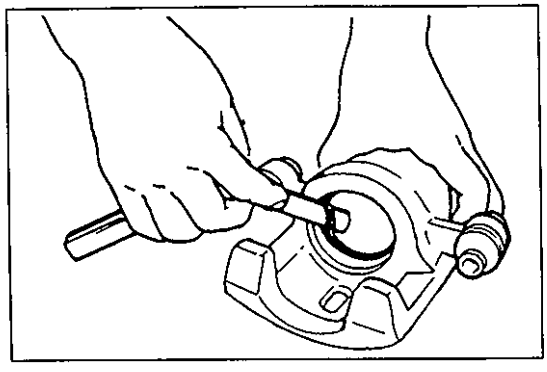

4) Remove piston seal using a thin blade like a thickness gauge, etc.

NOTE:
Be careful not to damage inside (bore side) of cylinder.

5) Remove bleeder plug and cap from caliper.

INSTALLATION

CAUTION:
- **Wash each part cleanly before installation in the same fluid as the one used in master cylinder reservoir.**
- **Never use other fluid or thinner.**
- **Before installing piston and piston seal to cylinder, apply fluid to them.**
- **After reassembling brake lines, bleed air from them.**

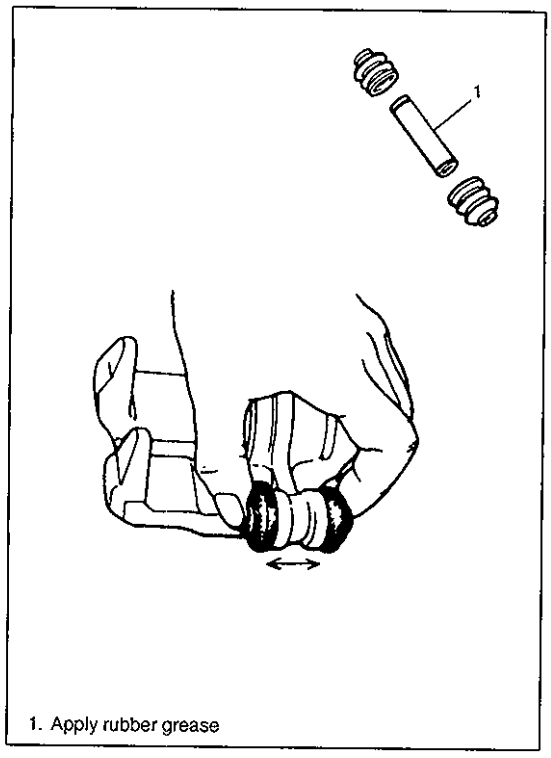

1. Apply rubber grease

Slide Bush, Boot and Bleeder Plug

1) Check that slide bushes and boots for wear, corrosion, damage, movement or deterioration. If it is found faulty, correct or replace. Apply rubber grease to bush outer surface. And then make sure that each bush slides easily through each caliper bolt hole.

NOTE:
Where temperature gets as low as –30°C (–22°F) in cold weather, use rubber grease whose viscosity varies very little even at –40°C (–40°F).

2) Tighten bleeder plug to specified torque (refer to TIGHTENING TORQUE SPECIFICATIONS) and install cap.

Piston Seal

3) Piston seal is used to seal piston and cylinder and to adjust clearance between pad and disc. Replace with a new one at every overhaul. Fit piston seal into groove in cylinder taking care not to twist it.

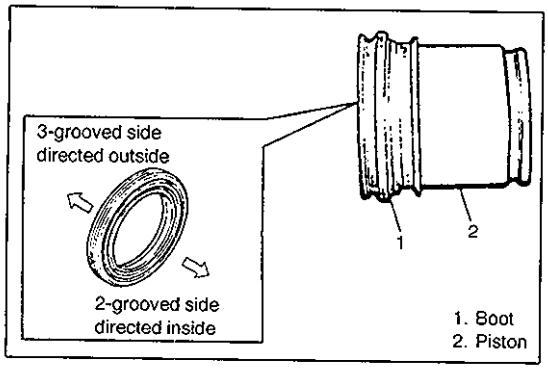

1. Boot
2. Piston

Piston and Boot

4) Before inserting piston into cylinder, install new boot onto piston as shown.

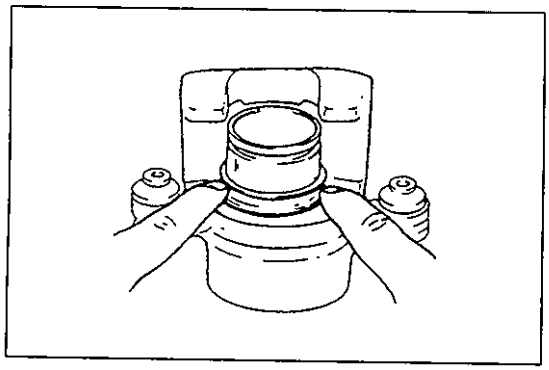

5) Fit boot as it is in figure into boot groove in cylinder with fingers.

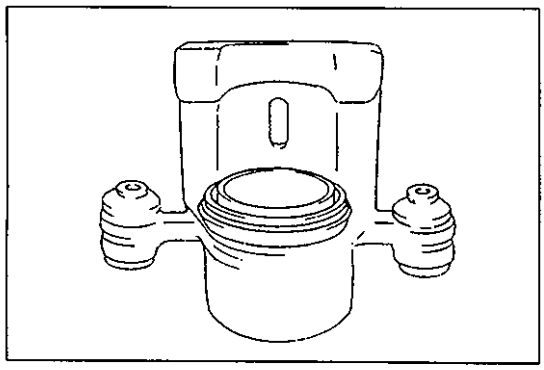

6) Insert piston into cylinder by hand and fit boot in boot groove in piston.

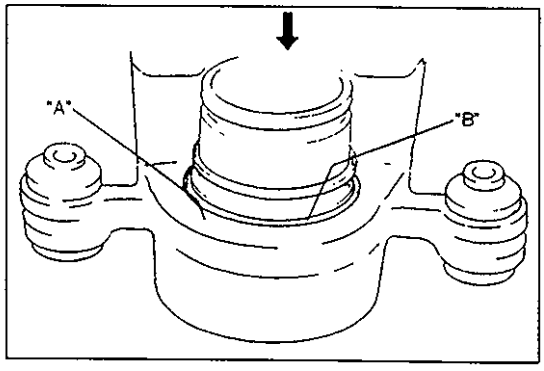

7) To confirm that boot is fitted in its groove in cylinder properly, pull piston out of cylinder a little but do not take it all out.

NOTE:
Boot's face "B" should be at the same level from cylinder's face "A" all around.

8) Insert piston into cylinder by hand.
9) Install piston set ring.

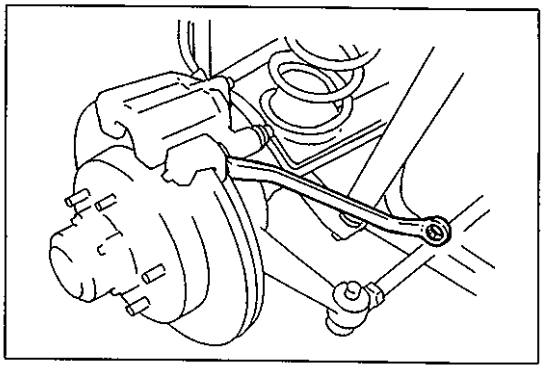

REMOVE AND INSTALL DISC

REMOVAL

1) Hoist vehicle and remove wheel.
2) Remove caliper assembly by loosening carrier bolts (2 pcs).

CAUTION:
During removal, be careful not to damage brake flexible hose and not to depress brake pedal.

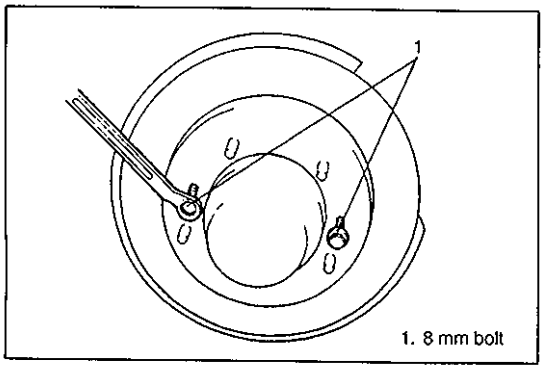

3) Pull brake disc off by using 8 mm bolts (2 pcs).

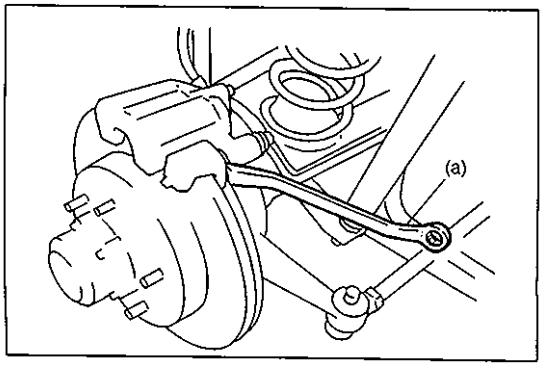

INSTALLATION

NOTE:
See NOTE at the beginning of this section.

1) Install disc to wheel hub.
2) Install caliper assembly to steering knuckle.
3) Torque caliper carrier bolts to specification.

Tightening Torque
(a): 85 N·m (8.5 kg-m, 61.5 lb-ft)

4) Install wheel and torque front wheel nuts to specification.
5) Upon completion of installation, perform brake test.

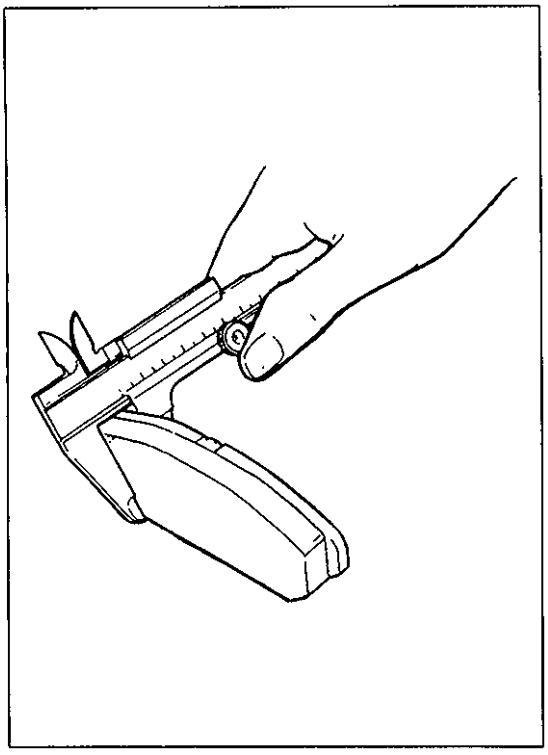

FRONT DISC BRAKE INSPECTION

INSPECT BRAKE PAD LINING

Check pad lining for wear. When wear exceeds limit, replace with new one.

CAUTION:
Never polish pad lining with sandpaper. If lining is polished with sandpaper, hard particles of sandpaper will be deposited in lining and may damage disc. When pad lining requires correction, replace it with a new one.

Pad thickness (lining + pad rim)
Standard : 15 mm (0.59 in.)
Limit : 7 mm (0.28 in.)

NOTE:
When pads are removed, visually inspect caliper for brake fluid leak. Correct leaky point, if any.

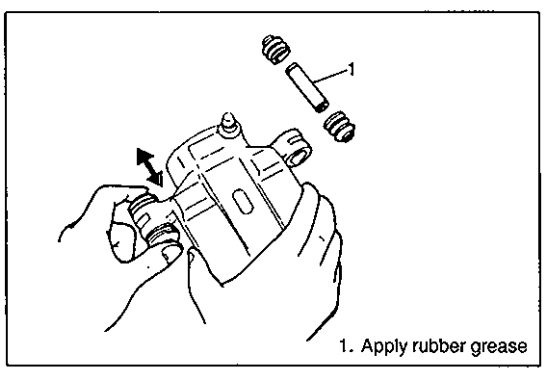

1. Apply rubber grease

INSPECT BRAKE CALIPER INNER PARTS

Cylinder Slide Bush

Check slide bush for smooth movement as shown.
If it is found faulty, correct or replace. Apply rubber grease to bush outer surface. Rubber grease should be the one whose viscosity is less affected by such low temperature as –40°C (–40°F).

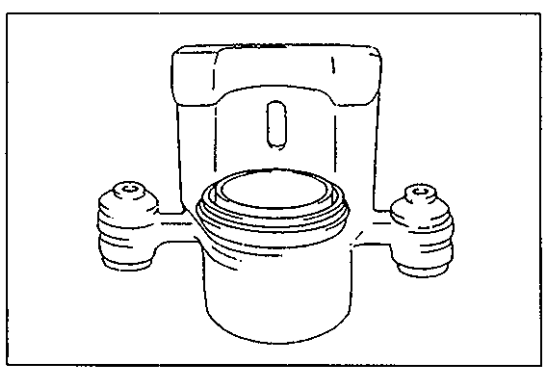

Bush Dust Boot and Cylinder Boot

Check boots for breakage, crack and damage. If defective, replace.

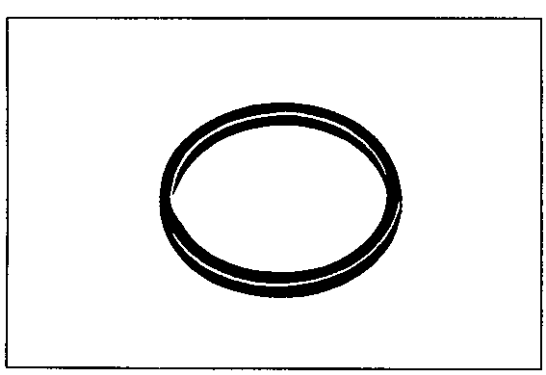

Piston Seal

Excessive or uneven wear of pad lining may indicate unsmooth return of the piston. In such a case, replace rubber seal.

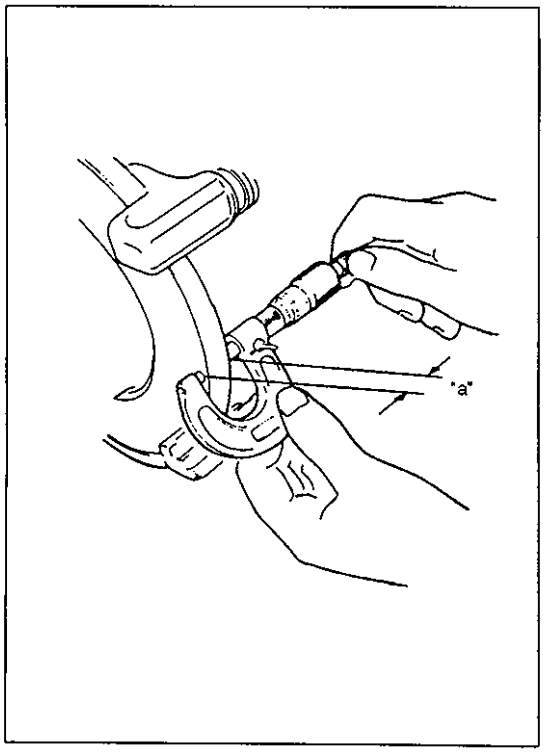

INSPECT BRAKE DISC

Before this inspection, brake pads must be removed (according to steps 1) to 4) of PAD REMOVAL.

Check disc surface for scratches in wearing parts. Scratches on disc surface noticed at the time of specified inspection or replacement are normal and disc is not defective unless they are serious. But when there are deep scratches or scratches all over disc surface, replace it. When only one side is scratched, polish and correct that side.

Disc thickness "a"

Standard: 10 mm (0.394 in.)
Limit: 8.0 mm (0.315 in.)

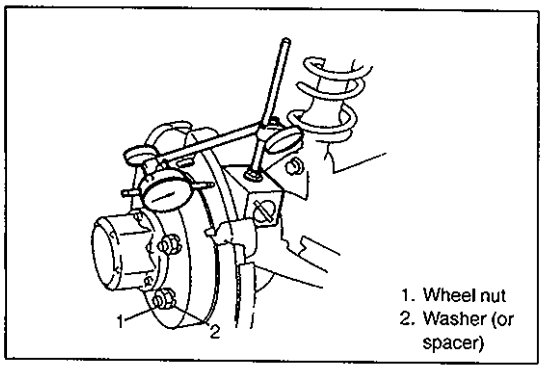

1. Wheel nut
2. Washer (or spacer)

Use wheel nuts and suitable plain washers to hold the disc securely against the hub, then mount a dial indicator as shown and measure the runout at 10 mm (0.39 in.) from the outer edge of the disc.

Limit on disc deflection: 0.15 mm (0.006 in.)

NOTE:
Check front wheel bearing for looseness before measurement.

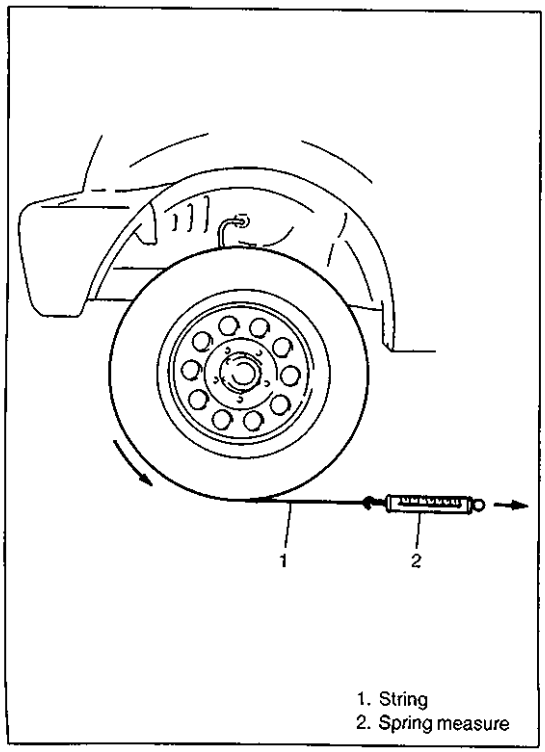

1. String
2. Spring measure

Inspection for Front Brake After Installing

Mount tires and make certain that they rotate smoothly, with a force of less than 3.0 kg (6.6 lb).

NOTE:
For above check the following must be observed.

1) **Jack up front wheels, both right and left, off the ground.**
2) **Shift transfer shift lever to 2H (rear wheel) position (if equipped) and start engine for a few seconds then stop.**
3) **Side figure shows outer periphery of tire.**
4) **Be careful not to depress brake pedal when checking tire for rotation.**

If tire rotation is heavy, check the following:

- Wheel bearings for breakage.
- Disc for flatness (Improper flatness brings disc into contact with lining during rotation and makes rotation heavy).

To check this, measure disc deflection.

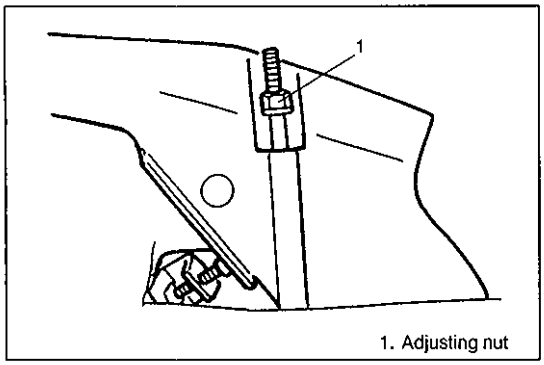

1. Adjusting nut

DRUM AND COMPONENTS R & I

REMOVE AND INSTALL BRAKE DRUM

REMOVAL

1) Hoist vehicle and pull up parking brake lever.
2) Remove wheel.
3) Release parking brake lever.
4) Loosen parking brake cable adjusting nut.

5) To increase clearance between brake shoe and brake drum, remove rubber plug from brake back plate and turn adjuster downward with flat-head screw driver.

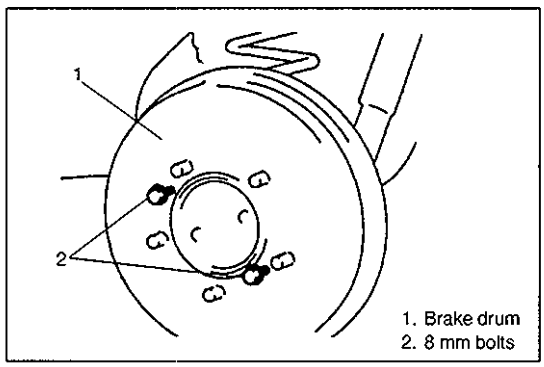

1. Brake drum
2. 8 mm bolts

6) Remove brake drum off by using 8 mm bolts.

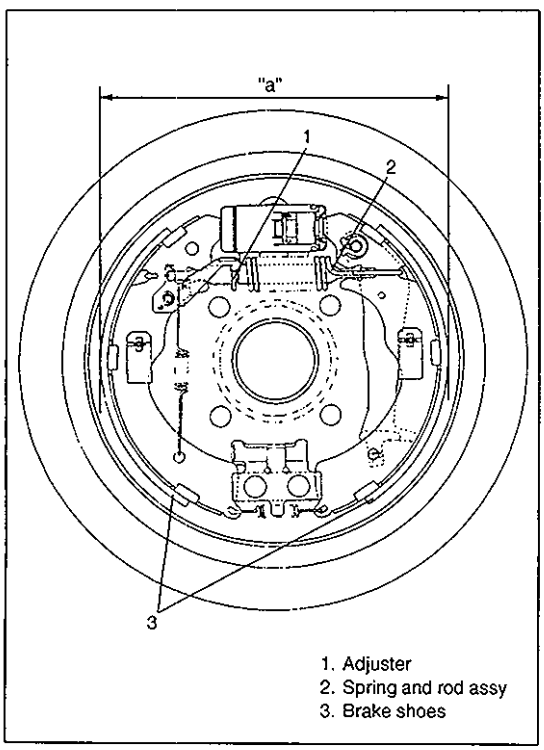

1. Adjuster
2. Spring and rod assy
3. Brake shoes

INSTALLATION

NOTE:
See NOTE at the beginning of this section.

1) Before installing brake drum, check outer diameter of brake shoes. If it is not within value as specified below, adjust it to specification by turning adjuster.

Outer diameter of brake shoes
"a" : 219.4 – 219.7 mm (8.638 – 8.650 in.)

2) Install brake drum after making sure that inside of brake drum and brake shoes are free from dirt and oil.
3) Upon completion of all jobs, depress brake pedal with about 30 kg (66 lbs) load about 30 times so as to obtain proper drum-to-shoe clearance.
   Adjust parking brake cable.

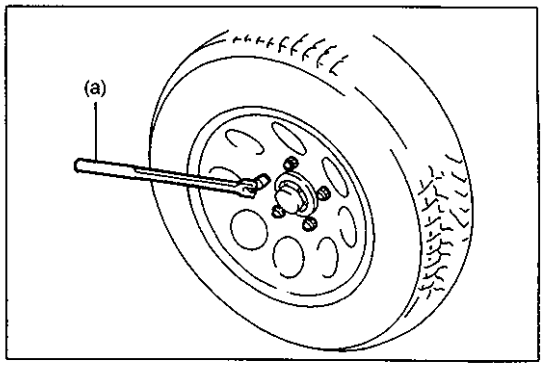

4) Install wheel and tighten wheel nuts to specified torque.

Tightening Torque
(a): 95 N·m (9.5 kg-m, 69.0 lb-ft)

5) Check to ensure that brake drum is free from dragging and proper braking is obtained. Then remove vehicle from hoist and perform brake test (foot brake and parking brake).

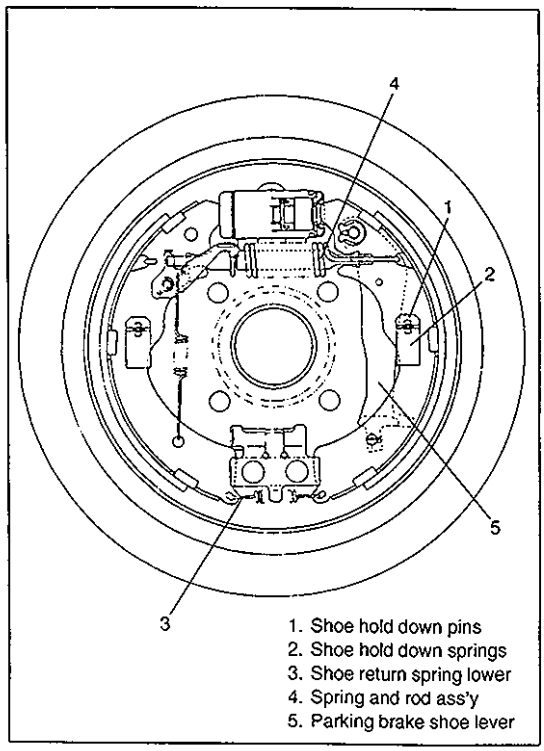

1. Shoe hold down pins
2. Shoe hold down springs
3. Shoe return spring lower
4. Spring and rod ass'y
5. Parking brake shoe lever

REMOVE AND INSTALL BRAKE SHOE

REMOVAL

1) Perform steps 1) to 6) of BRAKE DRUM REMOVAL.
2) Remove shoe return spring lower, spring and rod ass'y and shoe hold down springs by turning shoe hold down pins.

> **WARNING:**
> **Use special care when installing brake shoe return spring. Failure in its proper installation may allow it to spring back and cause personal injury.**

3) Remove parking brake shoe lever from brake back plate.

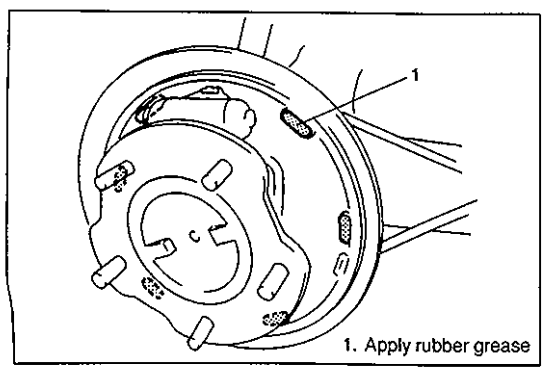

1. Apply rubber grease

INSTALLATION

Assemble parts as shown in reverse order of removal.

1) Apply rubber grease to brake back plate and parking brake shoe lever as shown in figure.

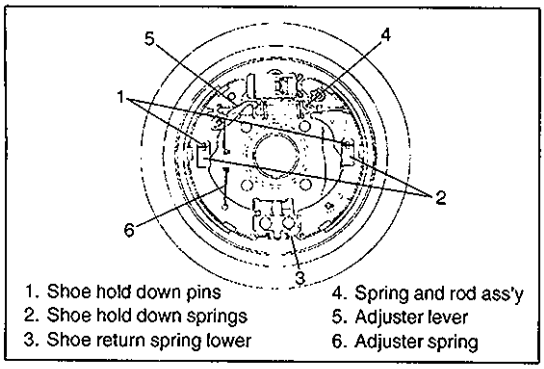

1. Shoe hold down pins
2. Shoe hold down springs
3. Shoe return spring lower
4. Spring and rod ass'y
5. Adjuster lever
6. Adjuster spring

2) Install shoe hold down springs by pushing them down in place and turning hold down pins.
3) Install shoe return spring and parking brake shoe lever spring.
4) For procedure hereafter, refer to steps 1) to 5) of BRAKE DRUM INSTALLATION.

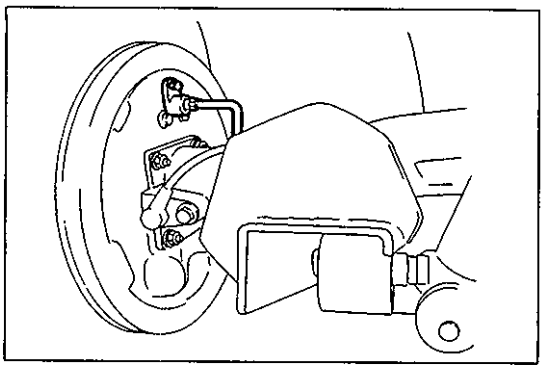

REMOVE AND INSTALL WHEEL CYLINDER

REMOVAL

1) Perform steps 1) to 6) of BRAKE DRUM REMOVAL.
2) Perform steps 2) and 3) of BRAKE SHOE REMOVAL.
3) Loosen brake pipe flare nut (or nuts) but only within the extent that fluid does not leak.

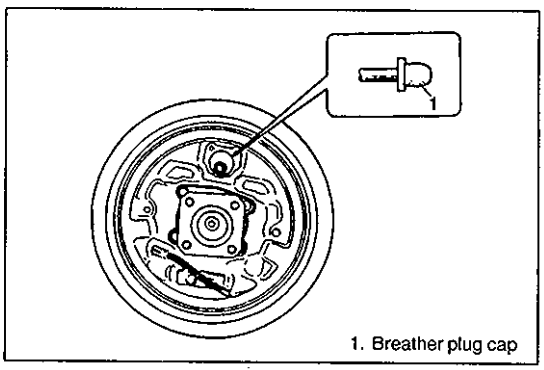

1. Breather plug cap

4) Remove wheel cylinder mounting bolts. Disconnect brake pipe (or pipes) from wheel cylinder and put wheel cylinder breather plug cap onto pipe to prevent fluid from spilling.

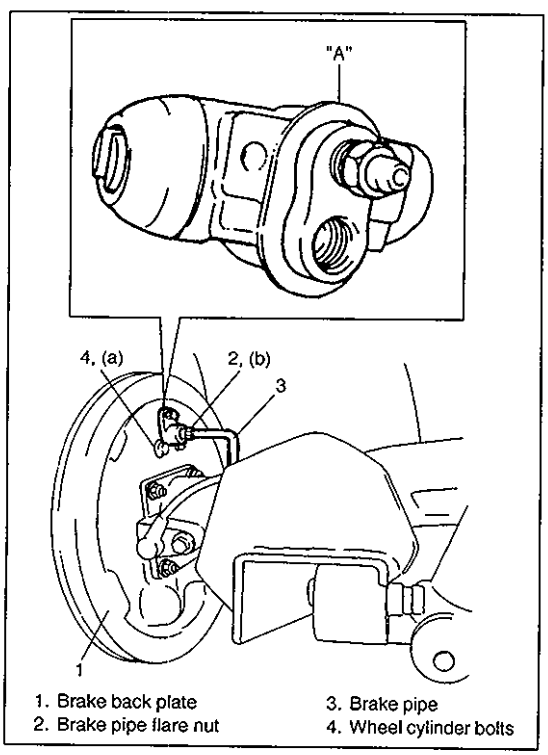

1. Brake back plate
2. Brake pipe flare nut
3. Brake pipe
4. Wheel cylinder bolts

INSTALLATION

1) Apply sealant to wheel cylinder. Then take off bleeder plug cap from brake pipe and connect pipe (for pipes) to wheel cylinder just enough to prevent fluid from leaking.

   "A": Sealant 99000-31090

2) Tighten wheel cylinder to brake back plate to specified torque.
3) Torque flare nut (or nuts) of brake pipe which was connected in step 1) to specification.

   Tightening Torque
   (a): 9 N·m (0.9 kg-m, 6.5 lb-ft)
   (b): 16 N·m (1.6 kg-m, 11.5 lb-ft)

4) Install breather plug cap taken off from pipe back to breather plug.
5) For procedure hereafter, refer to steps 1) to 4) of BRAKE SHOE INSTALLATION.

   NOTE:
   Be sure to bleed brake system.

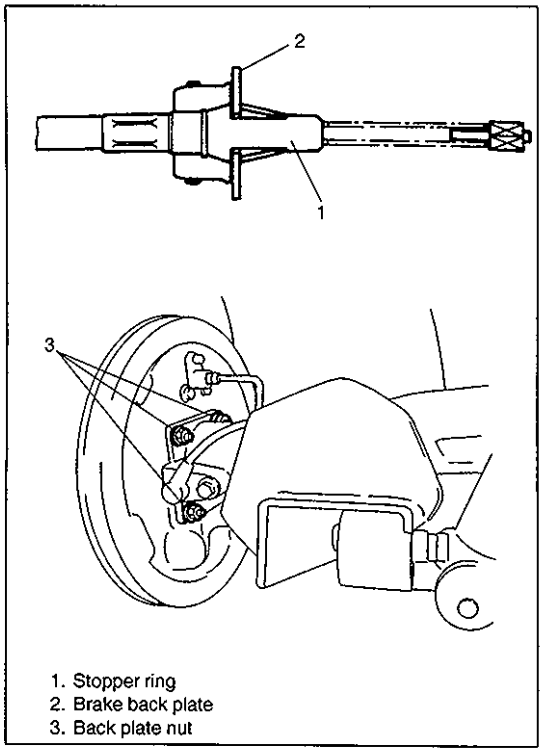

1. Stopper ring
2. Brake back plate
3. Back plate nut

REMOVE AND INSTALL BRAKE BACK PLATE

REMOVAL

1) Perform steps 1) to 6) of BRAKE DRUM REMOVAL.
2) Perform steps 2) and 3) of BRAKE SHOE REMOVAL.
3) Perform steps 3) and 4) of WHEEL CYLINDER REMOVAL.
4) Drain rear differential gear oil.
5) Remove cable from brake back plate by squeezing parking brake cable stopper ring.
6) Remove brake back plate nuts from rear axle housing.

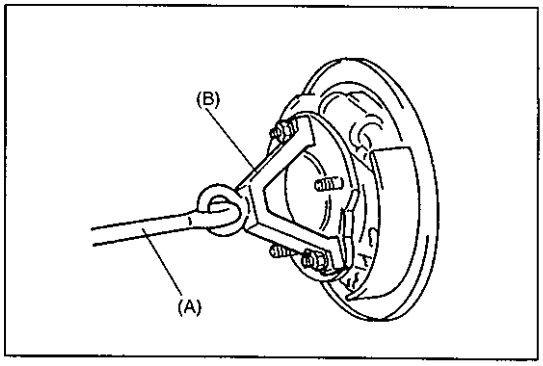

7) Using special tools, draw out rear axle shaft with brake back plate.

Special Tool
(A): 09943-35511
(B): 09942-15510

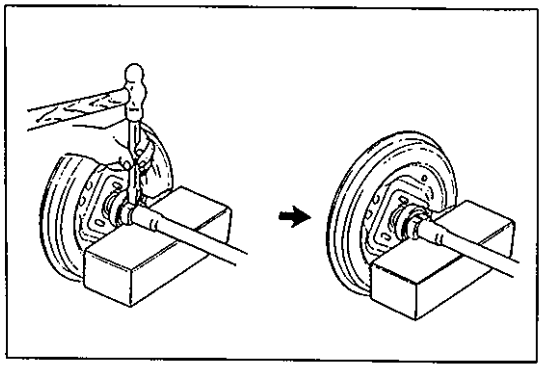

8) Remove wheel bearing retainer and wheel sensor ring (if equipped with ABS), refer to REAR AXLE SHAFT AND WHEEL BEARING REMOVAL in SECTION 3E.
9) Remove brake back plate from axle shaft.

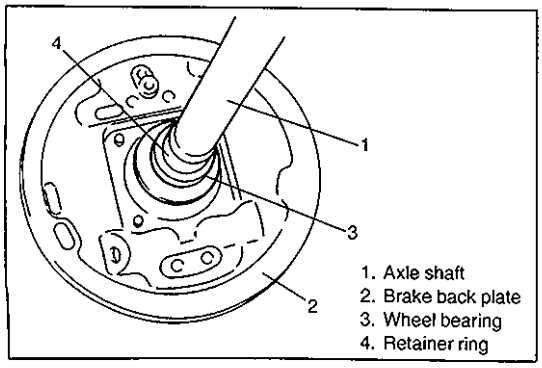

1. Axle shaft
2. Brake back plate
3. Wheel bearing
4. Retainer ring

INSTALLATION

1) Install wheel cylinder, and tighten wheel cylinder bolts to specified torque refer to WHEEL CYLINDER INSTALLATION.
2) Install brake back plate to axle shaft.
3) For installation procedure here after perform steps 2) – 20) of REAR AXLE SHAFT AND WHEEL BEARING INSTALLATION of Section 3E.

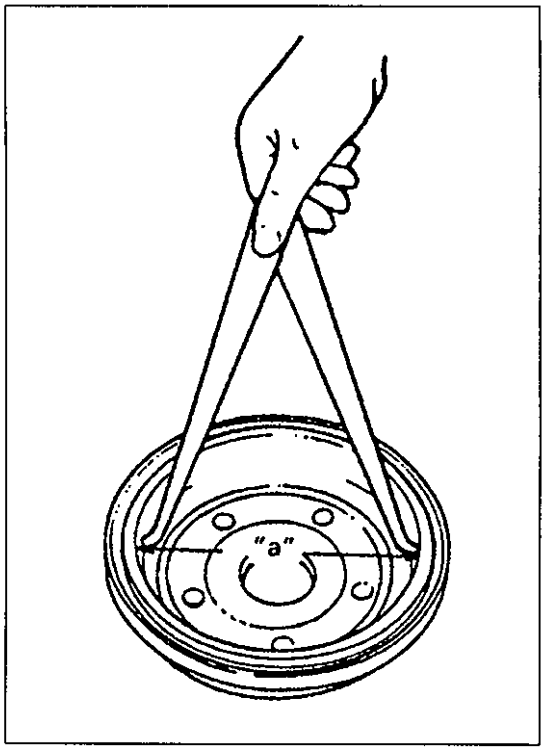

BRAKE DRUM AND COMPONENTS INSPECTION

INSPECT BRAKE DRUM

Inspect drum for cleanliness. Check wear of its braking surface by measuring its inside diameter.

Inside diameter "a"
Standard: 220 mm (8.66 in.)
Service Limit: 222 mm (8.74 in.)

Whenever brake drums are removed, they should be thoroughly cleaned and inspected for cracks, scores, deep grooves.

Cracked, Scored, or Grooved Drum
A cracked, drum is unsafe for further service and must be replaced. Do not attempt to weld a cracked drum.
Smooth up any slight scores. Heavy or extensive scoring will cause excessive brake lining wear and it will probably be necessary to re-surface drum braking surface.
If brake linings are slightly worn and drum is grooved, drum should be polished with fine emery cloth but should not be turned.

NOTE:
When drum is removed, visually inspect wheel cylinder for brake fluid leakage. Correct leaky point, if any.

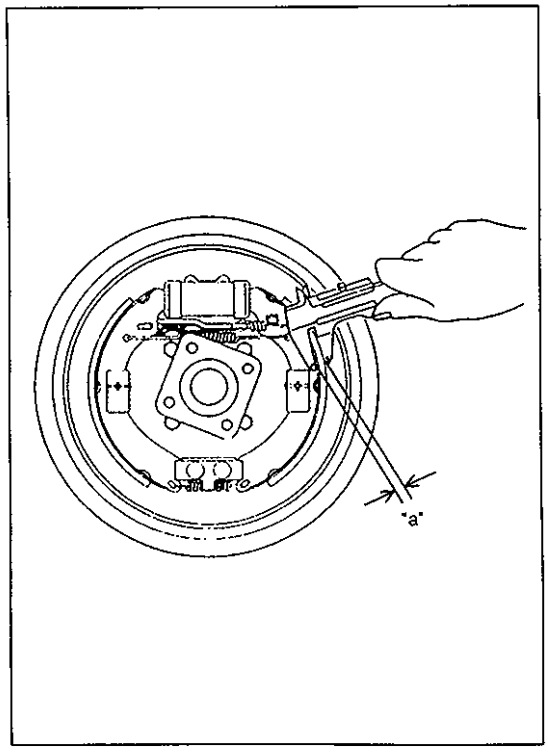

INSPECT BRAKE SHOE & LINING

Where lining is worn out beyond service limit, replace shoe.

Thickness "a"
Standard: 6.5 mm (0.26 in.)
Service limit: 3.0 mm (0.12 in.)

If one of brake linings is to service limit, all linings must be replaced at the same time.

NOTE:
Never polish lining with sandpaper. If lining is polished with sandpaper, hard particles of sandpaper will be deposited in lining and may damage drum. When it is required to correct lining, replace it with a new one.

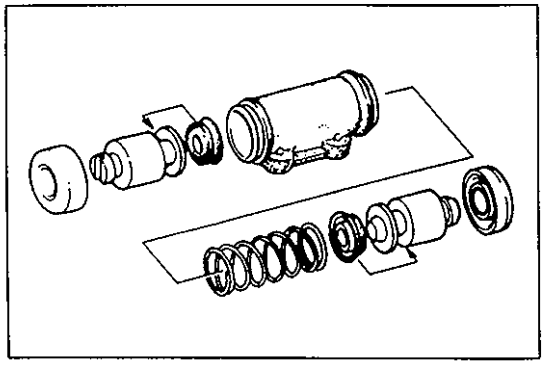

INSPECT WHEEL CYLINDER

Inspect wheel cylinder disassembled parts for wear, cracks, corrosion or damage.

NOTE:
Clean wheel cylinder components with brake fluid.

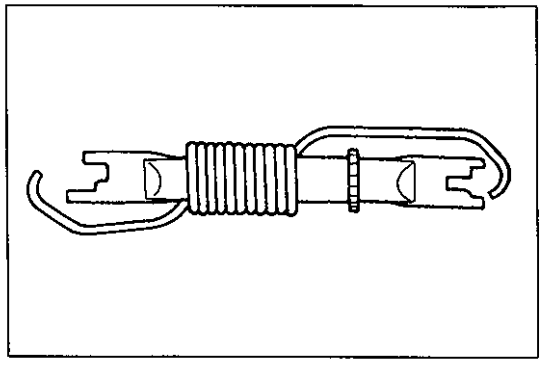

INSPECT PARKING SHOE LEVER

Inspect lever for free movement against brake shoe web. If defective, correct or replace.

INSPECT SPRING AND ROD ASSEMBLY

Inspect ratchet or thread rod part for wear, sticking and corrosion.

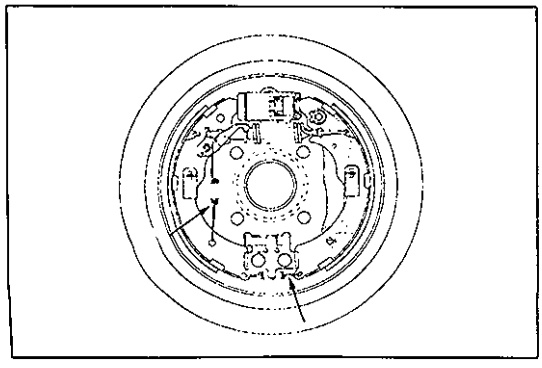

INSPECT SPRINGS

Inspect for damage or weakening.
Inspect each part with arrow for rust. If found defective, replace.

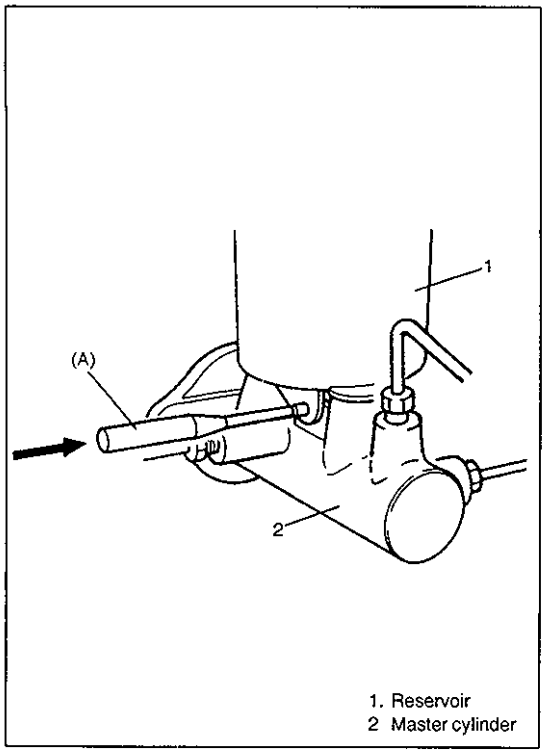

1. Reservoir
2 Master cylinder

MASTER CYLINDER REPAIR

REMOVE AND INSTALL MASTER CYLINDER RESERVOIR

REMOVAL

1) Disconnect reservoir lead wire at coupler.
2) Clean outside of reservoir.
3) Take out fluid with syringe or such.
4) Remove reservoir connector pin by using special tool.

Special Tool
(A): 09922-85811

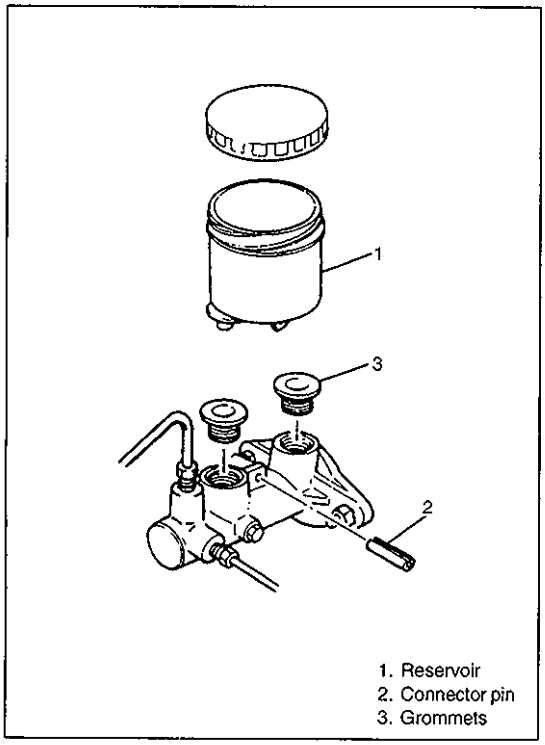

1. Reservoir
2. Connector pin
3. Grommets

5) Remove reservoir.

CAUTION:
Brake fluid is extremely damaging to paint.
Do not allow brake fluid to get on painted surfaces.

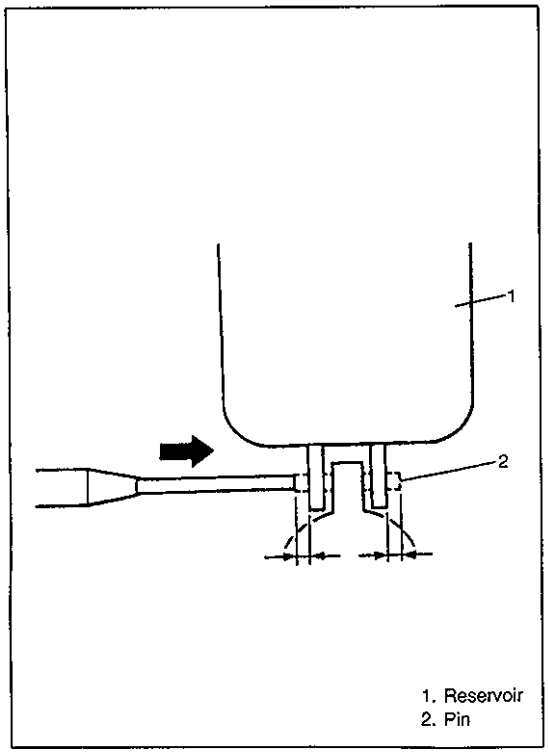

1. Reservoir
2. Pin

INSTALLATION

NOTE:
See NOTE at the beginning of this section.

1) When using new grommets, lubricate them with the same fluid as the one to fill reservoir with. Then press-fit grommets to master cylinder. Grommets must be seated in place.
2) Install reservoir and drive in reservoir pin.

NOTE:
Drive in reservoir pin till both of its ends at the right and left of reservoir become the same length.

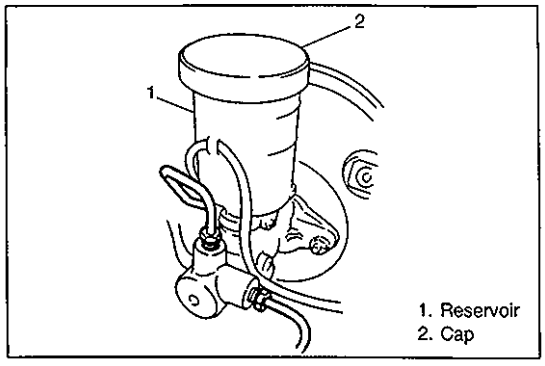

1. Reservoir
2. Cap

3) Connect reservoir lead wire.
4) Fill reservoir with specified fluid.
5) Upon completion of installation, check for fluid leakage.

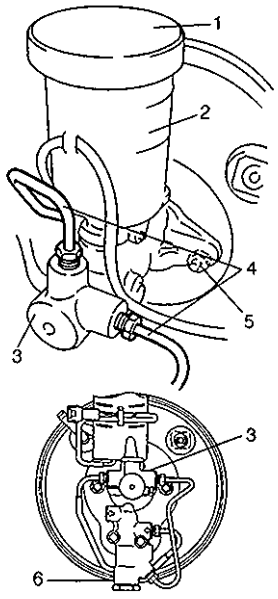

1. Reservoir cap
2. Reservoir
3. Master cylinder
4. Brake pipes
5. Attaching nuts
6. P & B valve (if equipped)

REMOVE AND INSTALL MASTER CYLINDER ASSEMBLY

REMOVAL

1) Disconnect reservoir lead wire at coupler.
2) Clean around reservoir cap and take out fluid with syringe or such.
3) Disconnect brake pipes from master cylinder.

> **CAUTION:**
> **Brake fluid is extremely damaging to paint.**
> **Do not allow brake fluid to get on painted surfaces.**

4) Remove master cylinder attaching nuts.
5) Remove master cylinder.
   For vehicle equipped with P & B valve, remove master cylinder with P & B valve and its bracket, then separate P & B valve from master cylinder.

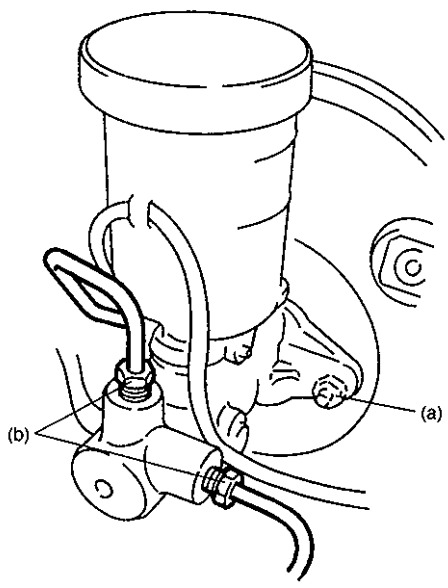

INSTALLATION

NOTE:
- **See NOTE at the beginning of this section.**
- **Check clearance between booster piston rod and primary**

1) Install master cylinder as shown and torque attaching nuts to specification.

   Tightening Torque
   (a): 13 N·m (1.3 kg-m, 9.5 lb-ft)

2) Attach hydraulic lines and torque flare nuts to specification.

   Tightening Torque
   (b): 16 N·m (1.6 kg-m, 11.5 lb-ft)

3) Connect reservoir lead wire.
4) Fill reservoir with specified brake fluid.
5) After installing, bleed air from system (refer to BLEEDING BRAKES) and check brake pedal height and play.
6) Perform brake test and check each installed part for fluid leakage.

DISASSEMBLY AND ASSEMBLY MASTER CYLINDER

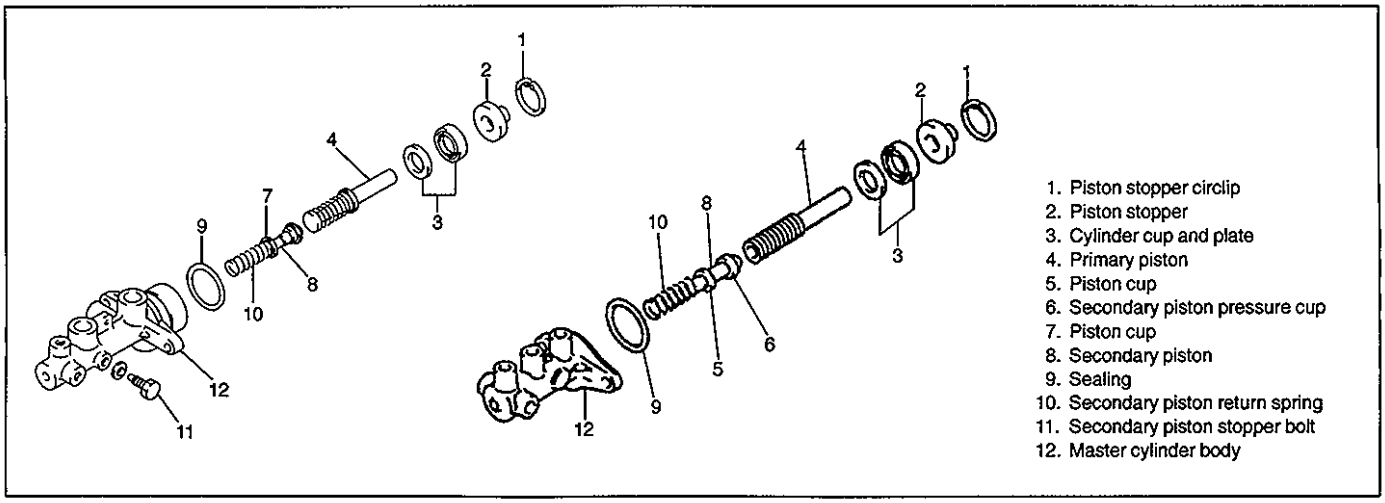

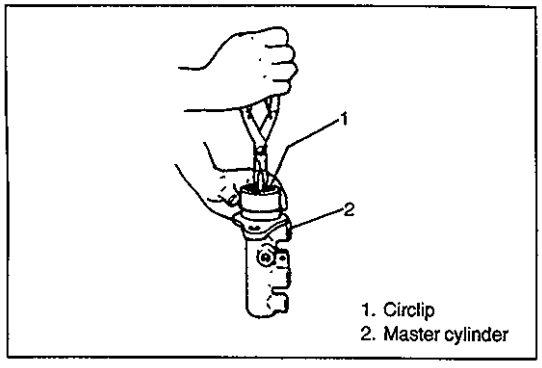

DISASSEMBLY

1) Remove circlip.
2) Remove primary piston.

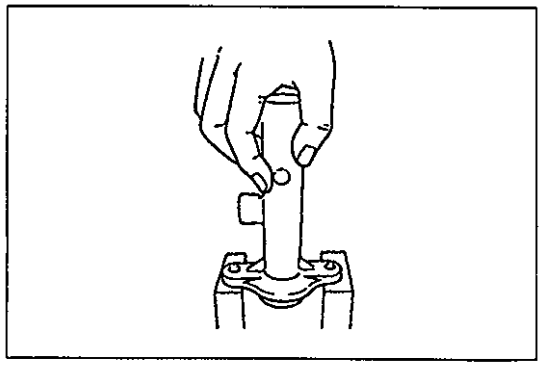

3) For vehicle with ABS
   Pull out primary piston assembly straight so as not to cause any damage to inside o cylinder wall.
   Pull out secondary piston assembly straight so as not to cause any damage to inside of cylinder wall and by tapping flange with a piece of wood or something soft.

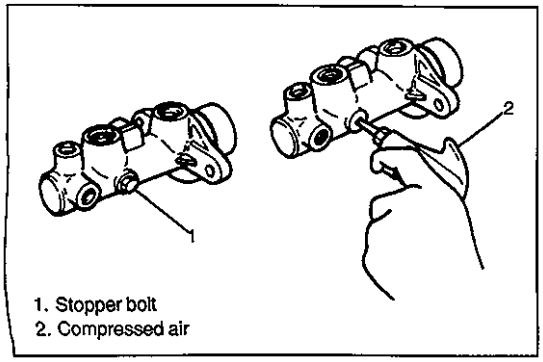

4) For vehicle without ABS
   Remove piston stopper bolt. Then remove secondary piston by blowing compressed air into hole from which piston stopper bolt was removed.
   Be cautions during removal as secondary piston jumps out.

ASSEMBLY

NOTE:
- **See NOTE at the beginning of this section.**
- **Before assembling, wash each part in fluid recommended to use for that vehicle.**

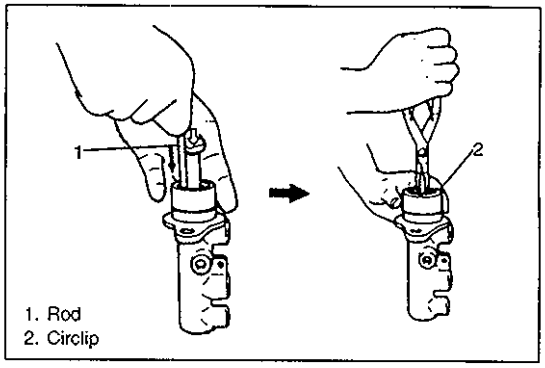

1. Rod
2. Circlip

1) Install secondary piston assembly into cylinder.
2) Install primary piston in cylinder.
3) Depress, and install circlip.

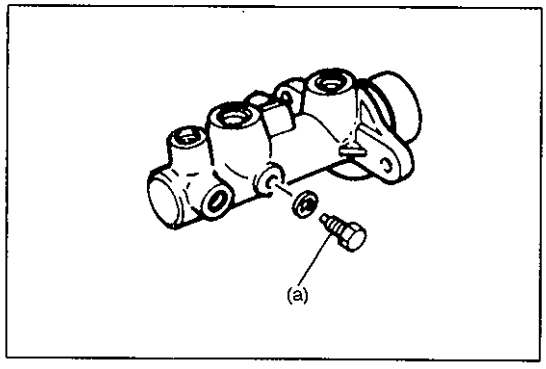

5) Install piston stopper bolt with pistons pushed in all the way and tighten it to specified torque (For vehicle without ABS).

Tightening Torque
(a): 10 N·m (1.0 kg-m, 7.5 lb-ft)

6) For installation on vehicle, refer to MASTER CYLINDER ASSEMBLY INSTALLATION.

Vehicle equipped with ABS

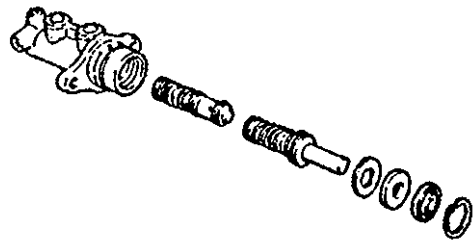

Vehicle not equipped with ABS

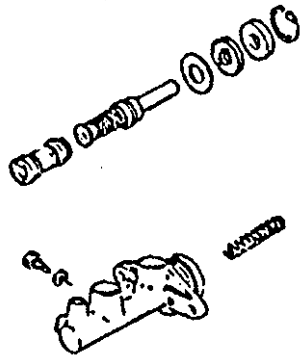

MASTER CYLINDER INSPECTION

INSPECT MASTER CYLINDER

Inspect all disassembled parts for wear or damage, and replace parts if necessary.

NOTE:

- **Wash disassembled parts with brake fluid.**
- **Do not reuse piston cups.**

Inspect master cylinder bore for scoring or corrosion. It is best to replace corroded cylinder.
Corrosion can be identified as pits or excessive roughness.

NOTE:

Polishing bore of master cylinder with cast aluminum body with anything abrasive is prohibited, as damage to cylinder bore may occur.

Rinse cylinder in clean brake fluid. Shake excess rinsing fluid from cylinder. Do not use a cloth to dry cylinder, as lint from cloth cannot be kept from cylinder bore surfaces.

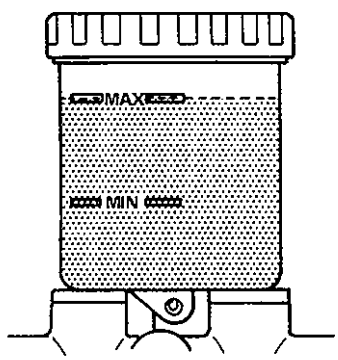

FILL RESERVOIR

CAUTION:

Do not use shock absorber fluid or any other fluid which contains mineral oil. Do not use container which has been used for mineral oil or which is wet from water. Mineral oil will cause swelling and distortion of rubber parts in hydraulic brake system and water will mix with brake fluid, lowering fluid boiling point. Keep all fluid containers capped to prevent contamination.

Fluid to fill reservoir with is indicated on reservoir cap of that vehicle with embossed letters or in owner's manual supplied with it.
Add fluid up to MAX line.

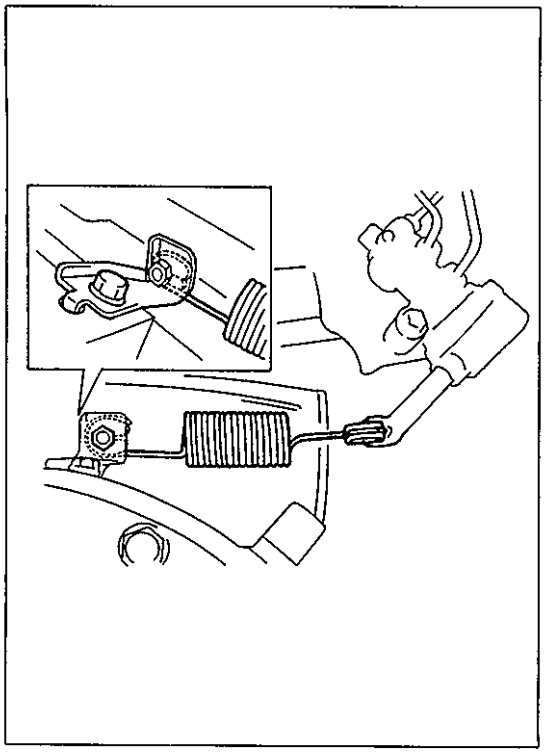

LSPV (Load Sensing Proportioning Valve) R & I

CAUTION:
Brake fluid is extremely damaging to paint.
Do not allow brake fluid to get on painted surface.

REMOVE AND INSTALL LSPV

REMOVAL

1) Clean around reservoir cap and take out fluid with syringe or such.
2) Hoist vehicle.
3) Disconnect brake pipes from LSPV.
4) Remove LSPV assembly from vehicle.

NOTE:
As shown in figure, LSPV assembly should be removed together with its spring and stay installed as they are.

5) Remove spring and stay from LSPV.

CAUTION:
LSPV assembly must not be disassembled.
Replace with new one if defective.

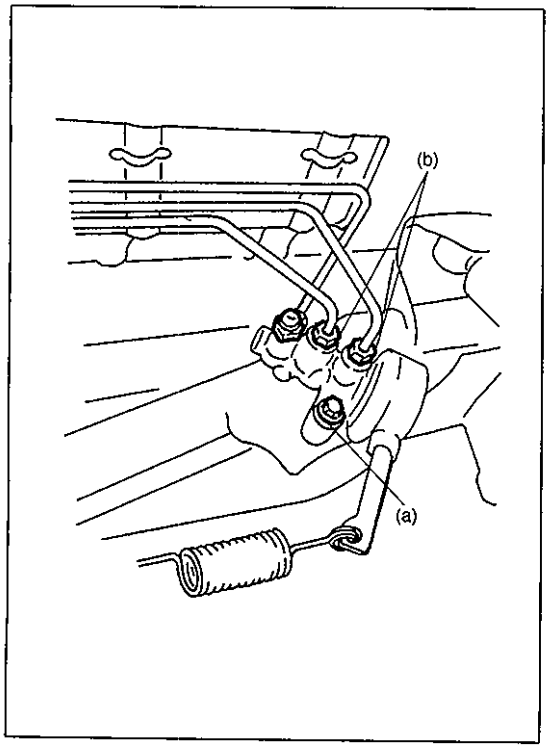

INSTALLATION

CAUTION:
Refer to above CAUTION.

Install by reversing removal procedure, noting the following.

1) Torque each bolt and nut to specification as indicated respectively.

Tightening Torque
(a): 23 N·m (2.3 kg-m, 17.0 lb-ft)
(b): 16 N·m (1.6 kg-m, 11.5 lb-ft)

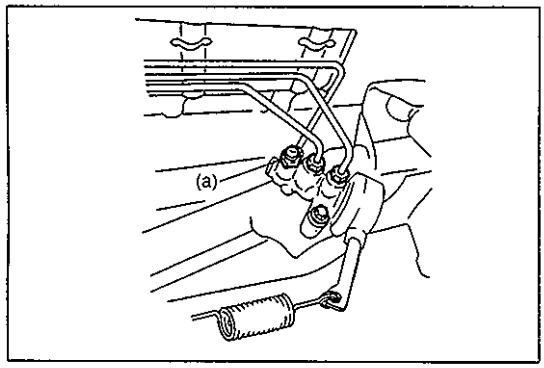

2) Upon completion of installation, fill reservoir tank with specified fluid and bleed air from brake system.

NOTE:
Make sure to bleed air from LSPV bleeder without fail.

Tightening Torque
(a): 8 N·m (8.0 kg-m, 6.0 lb-ft)

3) After bleeding air, check that LSPV is installed properly, referring to following INSPECTION & ADJUSTMENT.

AFTER-INSTALLATION INSPECTION & ADJUSTMENT

Confirm the following before inspection and adjustment.
- Fuel tank is filled with fuel fully.
- Vehicle is equipped with spare tire, tools, jack and jack handle.
- Vehicle is free from any other load.

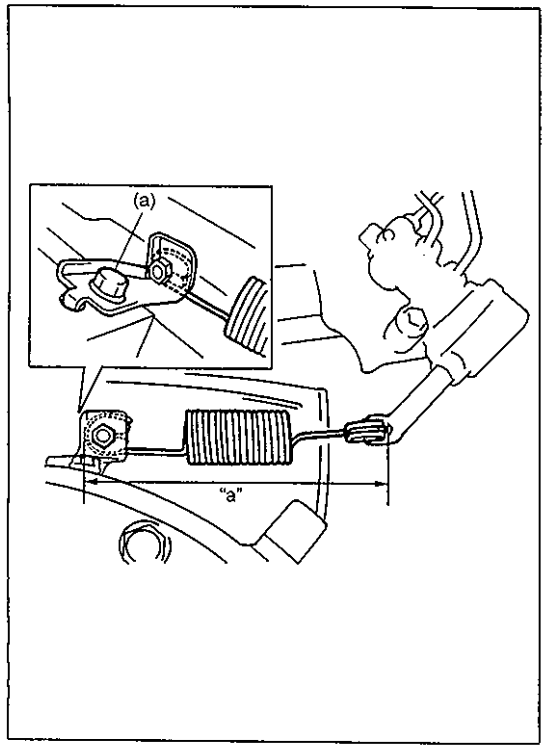

With vehicle in above conditions;
1) Place it on level floor.
2) Push up LSPV lever with finger till it stops and measure length of coil spring ("a" in figure).
3) Spring length "a" should be as specified.

Length "a": 147 mm (5.79 in.)

4) If it isn't, adjust it to specification by changing stay position as shown in figure. After adjustment, tighten bolt to specified torque.

Tightening Torque
(a): 23 N·m (2.3 kg-m, 17.0 lb-ft)

NOTE:
Check to make sure that LSPV body and brake pipe joints are free from fluid leakage. Replace defective parts, if any.

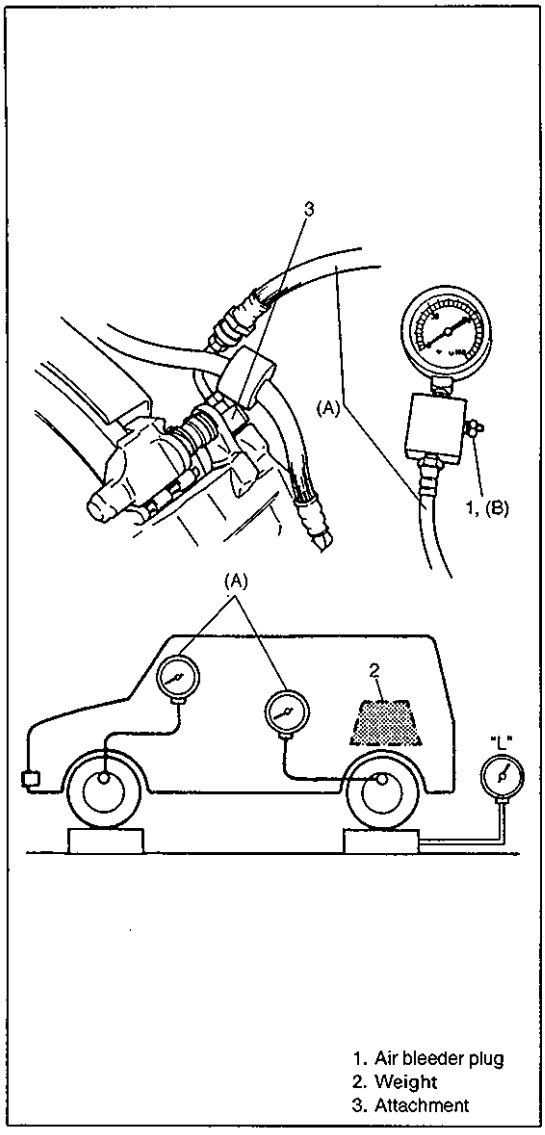

1. Air bleeder plug
2. Weight
3. Attachment

FLUID PRESSURE TEST (if equipped with LSPV)

Test procedure for LSPV assembly is as follows.
Before testing, confirm the following.

- Fuel tank is filled with fuel fully.
- Vehicle is equipped with spare tire, tools, jack and jack handle.

1) Stop vehicle on level floor and place approximately about 140 kg (309lbs) weight on rear housing so that rear axle weights 600 kg (1323 lb).

   Rear axle weight "L": 600 kg (1323 lb)

2) Install special tool to front and rear brake.

   NOTE:
   Special tool should be connected to bleeder plug hole of front (driver's side brake) and rear brakes.

   Special Tool
   Front brake
   (A) : 09956-02310
   (B) : 55473-82030 (Use the air bleeder plug supplied as a spare part)

   Rear brake
   (A) : 09956-02310
   (B) : 55473-82030 (Use the air bleeder plug supplied as a spare part)

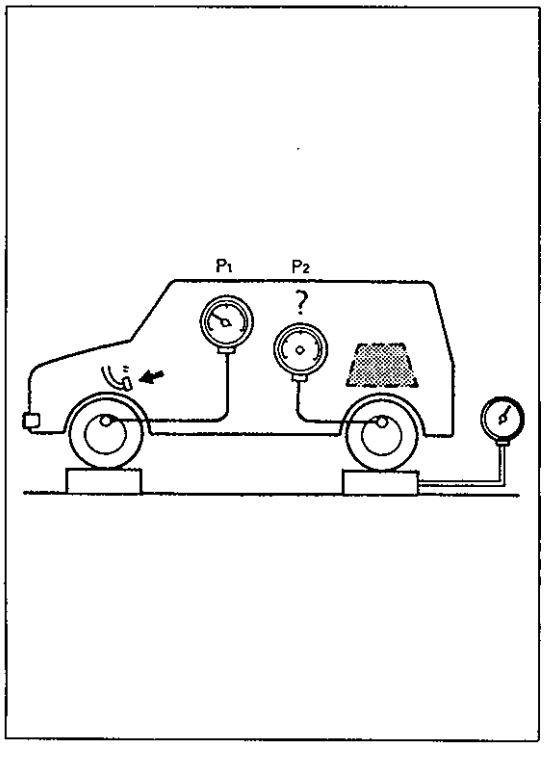

3) Depress brake pedal gradually till fluid pressure of front brake becomes as specified below and check corresponding pressure of rear brake. It should be within specification given below.

Front brake	Rear brake
5000 kPa 50 kg/cm^2 711 psi	3800 – 5100 kPa 38 – 51 kg/cm^2 540 – 725 psi

As done above, apply 100 kg/cm^2 pressure to front brake and check that rear brake pressure is within specification as given below.

Front brake	Rear brake
10000 kPa 100 kg/cm^2 1422 psi	5100 – 6500 kPa 51 – 65 kg/cm^2 725 – 924 psi

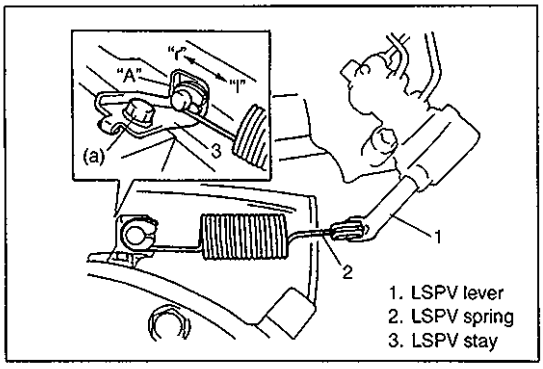

1. LSPV lever
2. LSPV spring
3. LSPV stay

4) If rear brake pressure is not within specification, adjust it by changing stay position as follows.
- If rear brake pressure is higher than specification, move stay "A" to direction "l" and if it is lower, to direction "r".
- Repeat steps 3) and 4) until rear brake pressure is within specification.
- After adjustment, be sure to torque bolt to specification.

Tightening Torque
(a) : 23 N·m (2.3 kg-m, 17 lb-ft)

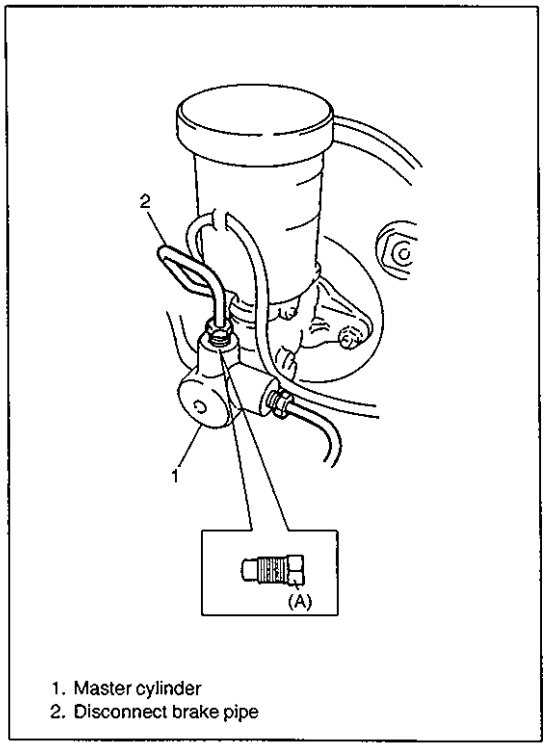

1. Master cylinder
2. Disconnect brake pipe

5) Disconnect brake pipe (connecting between master cylinder secondary side and 4-way joint) from master cylinder.
Tighten plug (special tool) to master cylinder.
Depress brake pedal. If rear brake pressure is 95 – 100 kg/cm^2 when front brake pressure is 100 kg/cm^2, it means that front fail-safe system functions properly.

Front brake	Rear brake
10000 kPa 100 kg/cm^2 1422 psi	9500 – 10000 kPa 95 – 100 kg/cm^2 1350 – 1422 psi

Special Tool
(A) : 09956-02210

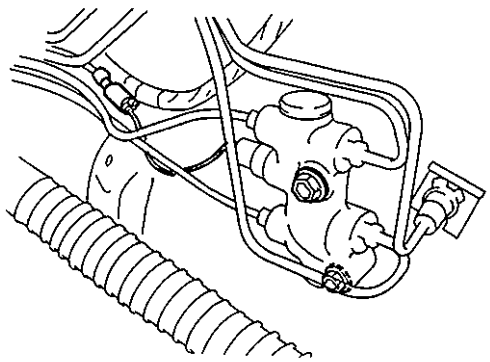

P (Proportioning) & DIFFERENTIAL VALVE R & I

REMOVE AND INSTALL P & DIFFERENTIAL VALVE

REMOVAL

CAUTION:
Do not allow brake fluid to get on painted surfaces.

1) Clean around reservoir cap and take out fluid with syringe or such.
2) Disconnect P & Differential lead wire at coupler.
3) Disconnect brake pipes from P & Differential valve.
4) Remove P & Differential valve.

WARNING:
Never disassemble P & Differential valve assembly.
If it is found faulty, replace it with new assembly.

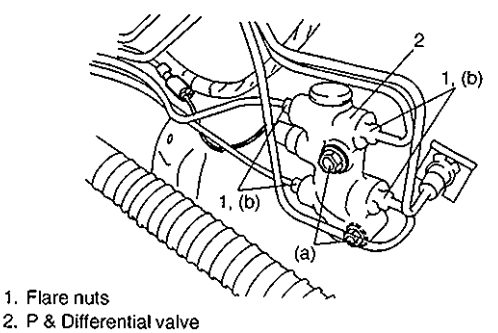

1. Flare nuts
2. P & Differential valve

INSTALLATION

1) Install P & Differential valve.
   Tightening Torque
   (a): 23 N·m (2.3 kg-m, 17.0 lb-ft)
2) Tighten flare nuts to specified torque.
   Tightening Torque
   (b): 16 N·m (1.6 kg-m, 12.0 lb-ft)
3) Fill reservoir with specified brake fluid.
4) Connect P & Differential lead wire at coupler.
5) Bleed air from system.

INSPECT DIFFERENTIAL SWITCH

NOTE:
See NOTE at the beginning of this section.

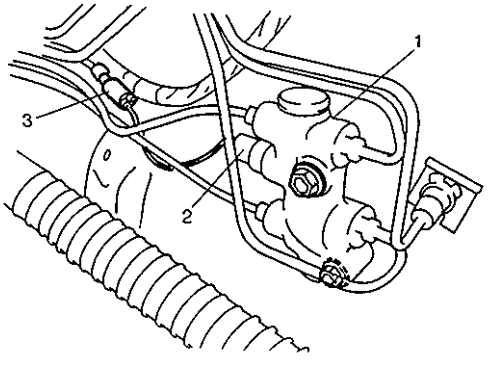

1. P & Differential valve.
2. Differential switch
3. Coupler

1) Make sure to turn ignition switch OFF and check for leakage in brake system.
2) Disconnect switch coupler.
3) With brake pedal depress, check that there is no continuity between terminal and valve body. If ohmmeter indicate continuity, check brake circuits for fluid leakage or replace P & Differential valve.

BRAKE BOOSTER REPAIR

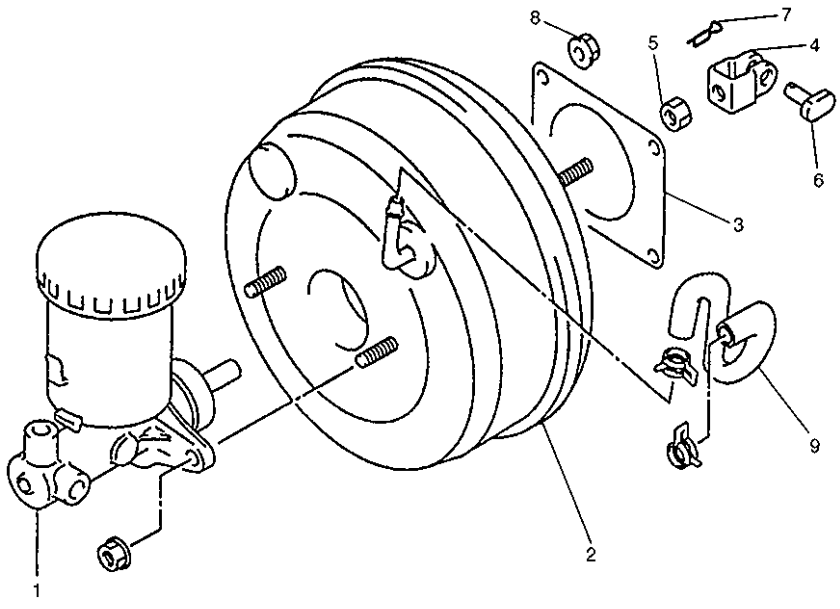

1. Brake master cylinder ass'y
2. Brake booster ass'y
3. Gasket
4. Push rod clevis
5. Nut
6. Clevis pin
7. Clip
8. Nut
9. Brake vacuum hose

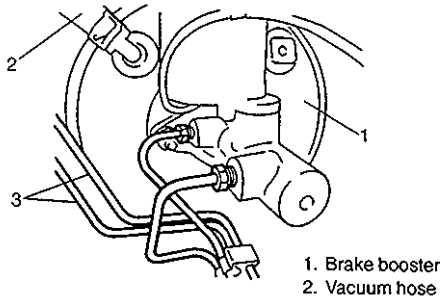

1. Brake booster
2. Vacuum hose
3. Brake pipe

REMOVE AND INSTALL BOOSTER

REMOVAL

1) Remove master cylinder assembly, referring to steps 1) to 5) of its REMOVAL.
2) Disconnect brake vacuum hose from booster.
3) Remove brake pipes.

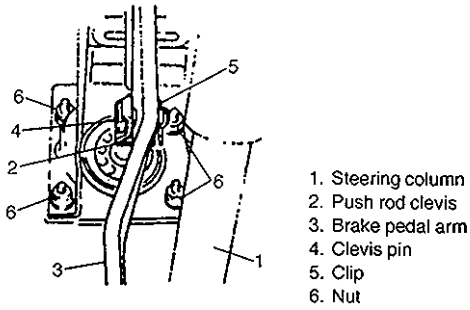

1. Steering column
2. Push rod clevis
3. Brake pedal arm
4. Clevis pin
5. Clip
6. Nut

4) Disconnect push rod clevis pin from brake pedal arm.
5) Remove attaching nuts and then booster as shown.

CAUTION:
Never disassemble brake booster. Disassembly will spoil its original function. If found faulty, replace it with new one.

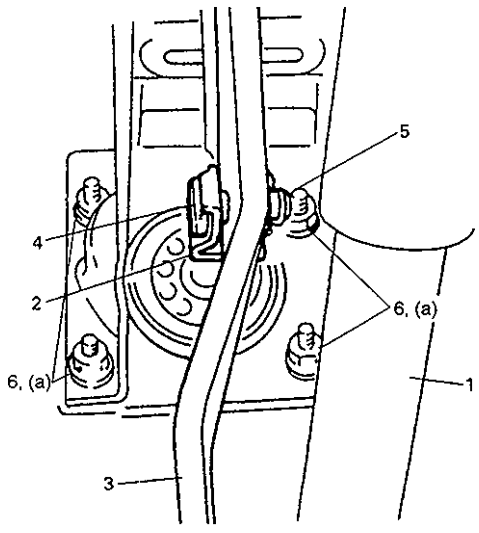

1. Steering column
2. Push rod clevis
3. Brake pedal arm
4. Clevis pin
5. Clip
6. Nut

INSTALLATION

NOTE:

- **See NOTE at the beginning of this section.**
- **Check length of push rod clevis. (Refer to item BOOSTER PUSH ROD CLEVIS ADJUSTMENT)**
- **Before installing master cylinder, adjust booster piston rod. (Refer to item INSPECT/ADJUST CLEARANCE BETWEEN BOOSTER PISTON ROD AND MASTER CYLINDER PISTON of this section).**
- **Apply silicone grease to master cylinder piston.**

1) Install booster to dash panel as shown, Then connect booster push rod clevis to pedal arm with clevis pin and clip.
2) Tighter booster attaching nuts to the specified torque.

Tightening Torque
(a) : 13 N·m (1.3 kg-m, 9.5 lb-ft)

3) Connect brake vacuum hose to brake booster.
4) Perform steps 1) to 6) of MASTER CYLINDER INSTALLATION of this section.

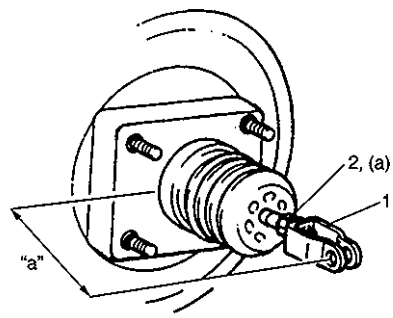

1. Clevis
2. Nut

BRAKE BOOSTER INSPECTION AND ADJUSTMENT

BOOSTER PUSH ROD CLEVIS ADJUSTMENT

Install push rod clevis so that measurement "a" is obtained and torque nut to specification.

Tightening Torque
(a) : 25 N·m (2.5 kg-m, 18.0 lb-ft)

Length
"a" : 126.1 – 127.1 mm (4.96 – 5.00 in.)

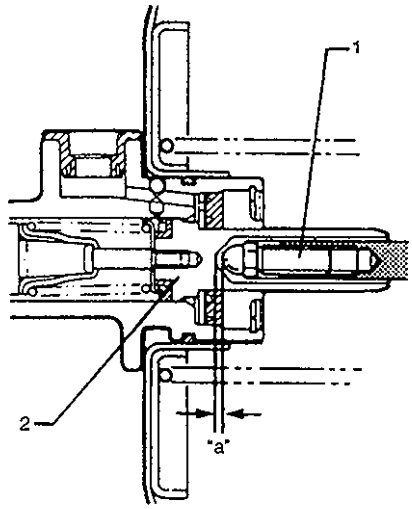

1. Booster piston rod
2. Master cylinder piston

INSPECT/ADJUST CLEARANCE BETWEEN BOOSTER PISTON ROD AND MASTER CYLINDER PISTON

The length of booster piston rod is adjusted to provide specified clearance "a" between piston rod end and master cylinder piston.

- Before measuring clearance, push piston rod several times so as to make sure reaction disc is in place.
- Keep inside of booster at atmospheric pressure for measurement.
- Remove piston (push) rod seal from booster, if equipped.

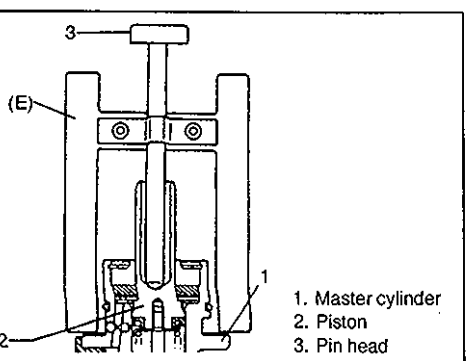

1. Master cylinder
2. Piston
3. Pin head

1) Set special tool (E) on master cylinder and push pin until contacts piston.

Special Tool
(E): 09950-96010

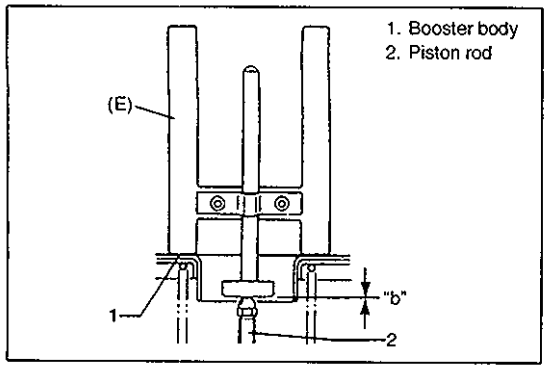

2) Turn special tool upside down and place it on booster. Adjust booster piston rod length until rod end contacts pin head.

Special Tool
(E): 09950-96010

Clearance "b": 0 mm (0 in.)

NOTE:
Take measurement with booster set vertically or piston rod supported with screw driver or such so as to set rod at the center.

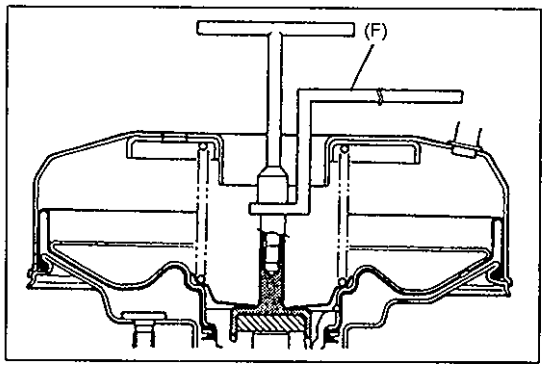

3) Adjust clearance by turning adjusting screw of piston rod.

Special Tool
(F): 09952-16010

INSPECT BOOSTER OPERATION

There are two ways to perform this inspection, with and without a tester. Ordinarily, it is possible to roughly determine its condition without using a tester.

NOTE:
For this check, make sure that no air is in hydraulic line.

INSPECTION WITHOUT TESTER

Check Air Tightness

1) Start engine.
2) Stop engine after running for 1 to 2 minutes.

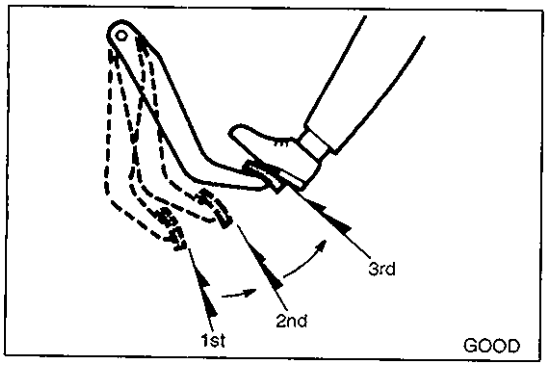

3) Depress brake pedal several times with the same load as in ordinary braking and observe pedal travel. If pedal goes down deep the first time but its travel decreases as it is depressed the second and more times, air tightness is obtained.

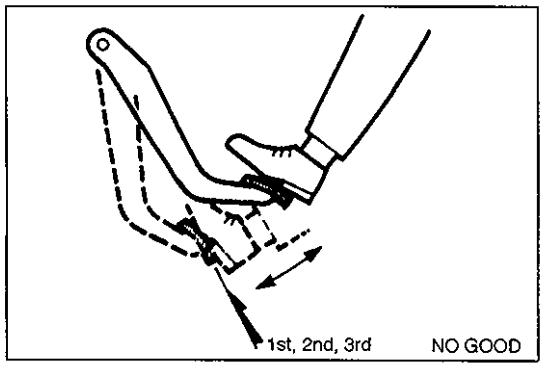

4) If pedal travel doesn't change, air tightness isn't obtained.

NOTE:
If defective, inspect vacuum lines and sealing parts, and replace any faulty part.
When this has been done, repeat the entire test.

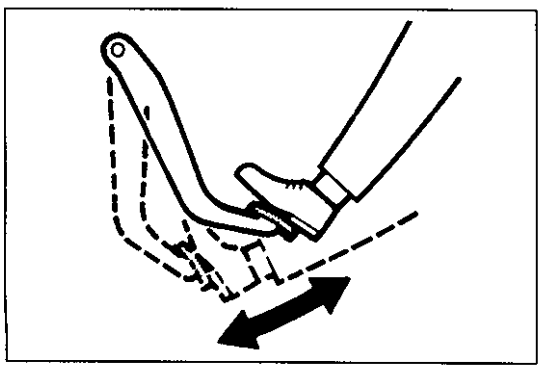

Check Operation

1) With engine stopped, depress brake pedal several times with the same load and make sure that pedal travel doesn't change.

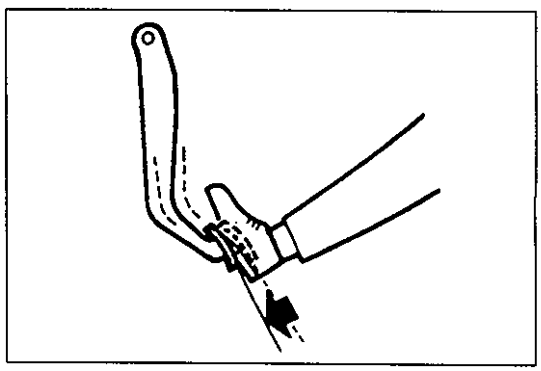

2) Start engine while depressing brake pedal. If pedal travel increases a little, operation is satisfactory. But no change in pedal travel indicates malfunction.

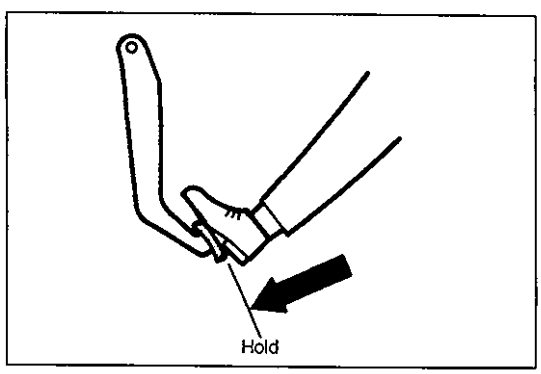

Check Air Tightness Under Load

1) With engine running, depress brake pedal. Then stop engine while holding brake pedal depressed.

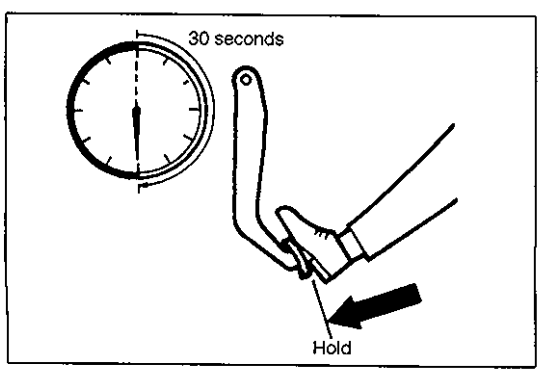

2) Hold brake pedal depressed for 30 seconds. If pedal height does not change, condition is good. But it isn't if pedal rises.

TIGHTENING TORQUE SPECIFICATIONS

Fastening Parts		Tightening Torque		
		N·m	kg-m	lb-ft
Brake caliper carrier bolt		85	8.5	61.5
Brake caliper pin bolt		22	2.2	16.0
Front brake flexible hose bolt		23	2.3	17.0
Brake back plate nut		23	2.3	17.0
Master cylinder nut		13	1.3	9.5
Booster nut		13	1.3	9.5
Brake pipe 5-way 4-way joint bolt		10	1.0	7.5
Brake pipe flare nut		16	1.6	12.0
LSPV bolt/P & Differential valve bolt		23	2.3	17.0
Brake bleeder plug	Front caliper	11	1.1	8.0
	Rear wheel cylinder, LSPV	8	0.8	6.0
Wheel nut		95	9.5	69.0
P & B valve bolt		6	0.6	4.5
Hose bracket bolt		10	1.0	7.5
Booster clevis nut		25	2.5	18.0

REQUIRED SERVICE MATERIALS

MATERIALS	RECOMMENDED SUZUKI PRODUCTS	USE
Brake fluid	Indicated on reservoir tank cap or described in owner's manual of vehicle	• To fill master cylinder reservoir. • To clean and apply to inner parts of master cylinder caliper and wheel cylinder when they are disassembled.
Water tight sealant	SEALING COMPOUND 366E 99000-31090	• To apply to mating surfaces of brake back plate and rear wheel cylinder.
Sealant	SUZUKI BOND NO. 1215 99000-31110	• To apply to mating surfaces of brake back plate and rear axle housing. • To apply to mating surfaces of brake back plate and rear wheel bearing retainer.

SPECIAL TOOLS

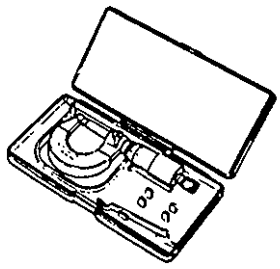 09900-20205 Micrometer (0 – 25 mm)	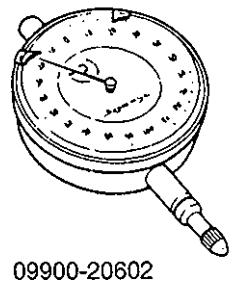 09900-20602 Dial gauge (1/1000 mm)	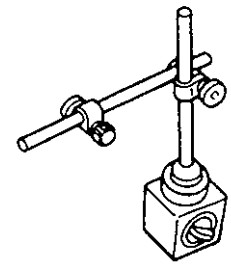 09900-20701 Magnetic stand	 09956-02210 Brake circuit plug
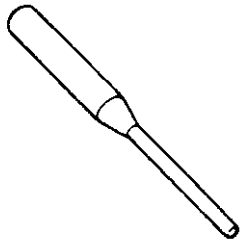 09922-85811 Connector pin remover	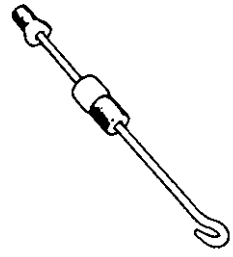 09942-15510 Sliding hammer	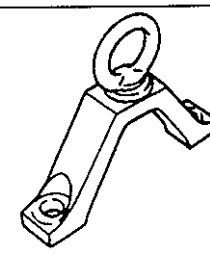 09943-35511 Brake drum remover (Front wheel hub remover)	 09950-78220 Flare nut wrench (10 mm)
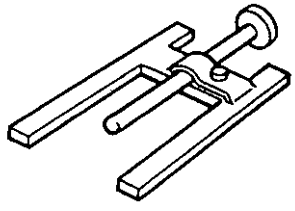 09950-96010 Booster piston rod gauge	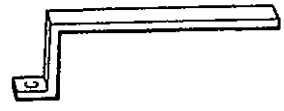 09952-16010 Booster piston rod adjuster	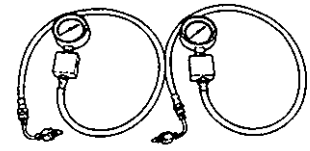 09956-02310 Fluid pressure gauge	

SECTION 5E

ANTILOCK BRAKE SYSTEM (ABS)

NOTE:
All brake fasteners are important attaching parts in that they could affect the performance of vital parts and systems, and/or could result in major repair expense. They must be replaced with one of same part number or with an equivalent part if replacement part of lesser quality or substitute design. Torque values must be used as specified during reassembly to assure proper retention of all parts. There is to be no welding as it may result in extensive damage and weakening of the metal.

CONTENTS

GENERAL DESCRIPTION 5E- 2
ABS Control Module 5E- 5
Differential Switch 5E- 6
DIAGNOSIS 5E- 7
Precaution in Diagnosing Troubles 5E- 7
ABS Diagnostic Flow Table 5E- 8
"ABS" Warning Lamp Check 5E-11
Diagnostic Trouble Code (DTC) Check ... 5E-11
Diagnostic Trouble Code (DTC) Clearance 5E-12
Diagnostic Trouble Code (DTC) Table ... 5E-13
System Circuit 5E-14
Table–A Lamp does not come "ON" 5E-16
Table–B Lamp comes "ON" steady 5E-18
Table–C Lamp flashes 5E-19
DTC15 G Sensor Circuit 5E-20
DTC 16 Stop Lamp Circuit 5E-22
DTC 21, 22, 25, 26, 31, 32, 35, 36 Wheel Speed Sensor Circuit 5E-24
DTC 41, 42, 45, 46, 55, 56 Hold and Release Solenoid Circuit 5E-26
DTC 57 Power Source Circuit 5E-28
DTC 61 ABS Pump Motor Circuit 5E-30
DTC 63 ABS Solenoid Valve Relay Circuit 5E-32
DTC 71 ABS Control Module 5E-34
Standard Voltage at ABS Control Module Connector Terminals 5E-35
ON-VEHICLE SERVICE 5E-37
Precaution 5E-37
ABS Hydraulic Unit Operation Check 5E-37
ABS Hydraulic Unit 5E-38
ABS Control Module 5E-41
Front Wheel Speed Sensor 5E-41
Front Wheel Speed Sensor Ring 5E-44
Rear Wheel Speed Sensor 5E-46
Rear Wheel Sensor Ring 5E-48
ABS Solenoid Valve Relay/ABS Pump Motor Relay 5E-49
Differential Switch 5E-49
G Sensor 5E-50
TIGHTENING TORQUE SPECIFICATIONS 5E-51
SPECIAL TOOLS 5E-51

GENERAL DESCRIPTION

The ABS (Antilock Brake System) is a system to prevent each wheel to lock during hard braking or braking on a slippery road by controlling the fluid pressure from master cylinder to each brake (either brake caliper or wheel cylinder).
The ABS of this vehicle monitors all four wheels (four sensors) and controls all four wheels when the system is active.
The component parts of this ABS includes following parts in addition to those of the conventional brake system.

- Wheel speed sensor senses revolution speed of each wheel and sends outputs to ABS control module.
- ABS control module sends operation signal to ABS hydraulic unit to control fluid pressure applied to each wheel cylinder based on signal from each wheel speed sensor so as to prevent wheel from locking.
- ABS hydraulic unit operates according to signal from ABS control module and controls fluid pressure applied to wheel cylinder of each of 4 wheels.
- Solenoid valve relay which supplies power to solenoid valve in ABS hydraulic unit.
- Pump motor relay supplies power to pump motor in ABS hydraulic unit.
- "ABS" warning lamp lights to inform abnormality when system fails to operate properly.
- G sensor which detects body deceleration speed.

For LH Steering Vehicle

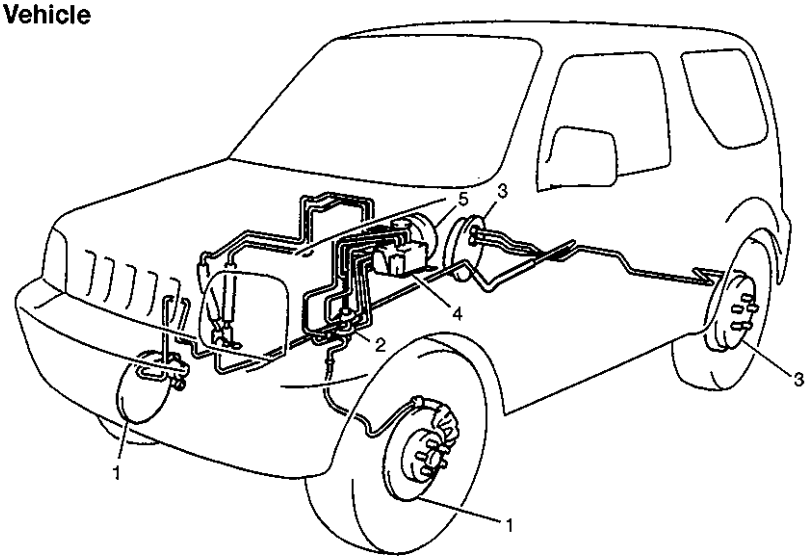

For RH Steering Vehicle

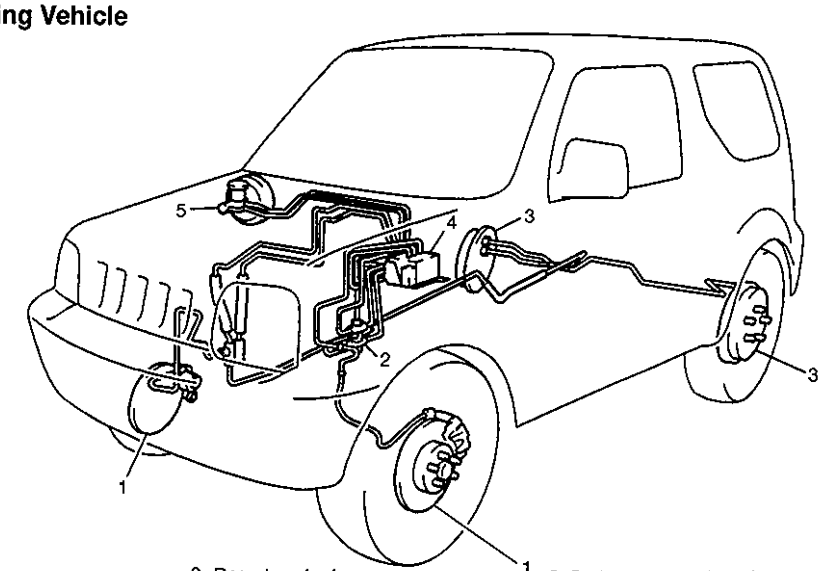

1. Front disc brake
2. Proportioning & differential valve
3. Rear drum brake
4. ABS hydraulic unit
5. Brake master cylinder/booster

SYSTEM SCHEMATIC

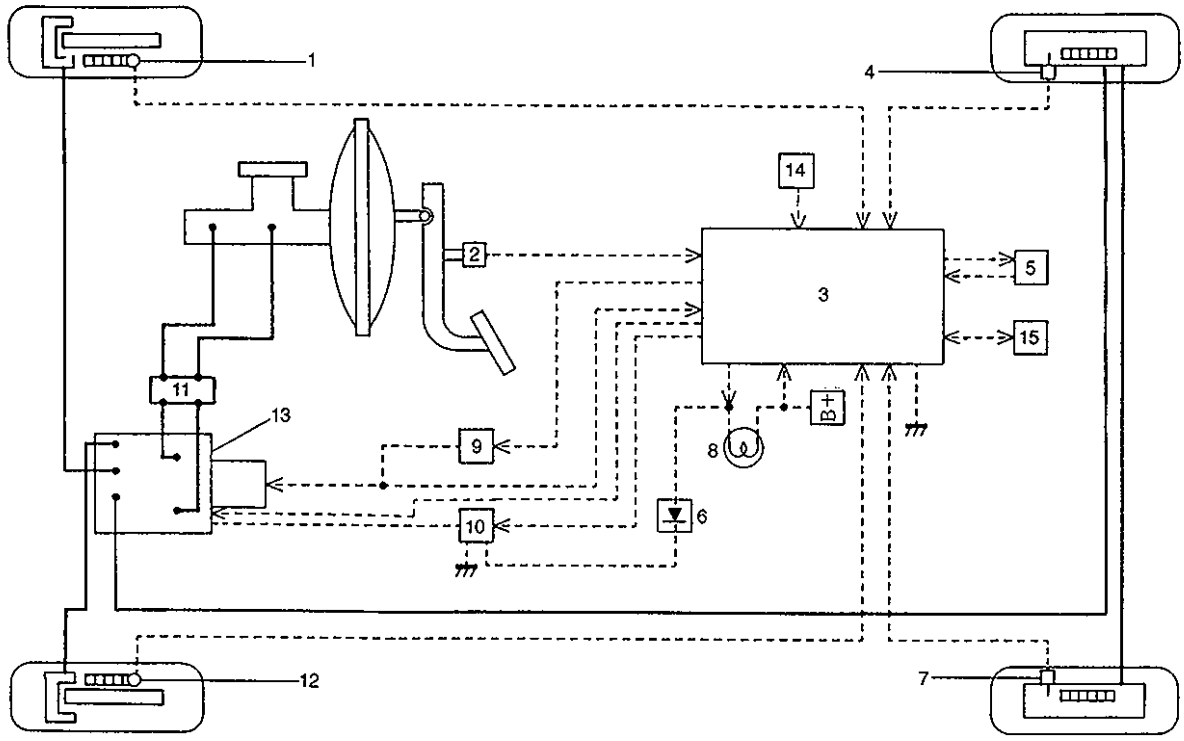

1. Wheel speed sensor (Right-front)
2. Stop lamp switch
3. ABS control module
4. Wheel speed sensor (Right-rear)
5. Monitor coupler
6. Diode
7. Wheel speed sensor (Left-rear)
8. "ABS" warning lamp
9. ABS pump motor relay
10. ABS solenoid valve relay
11. Proportioning and differential valve
12. Wheel speed sensor (Left-front)
13. ABS hydraulic unit
14. G sensor
15. Data link connector

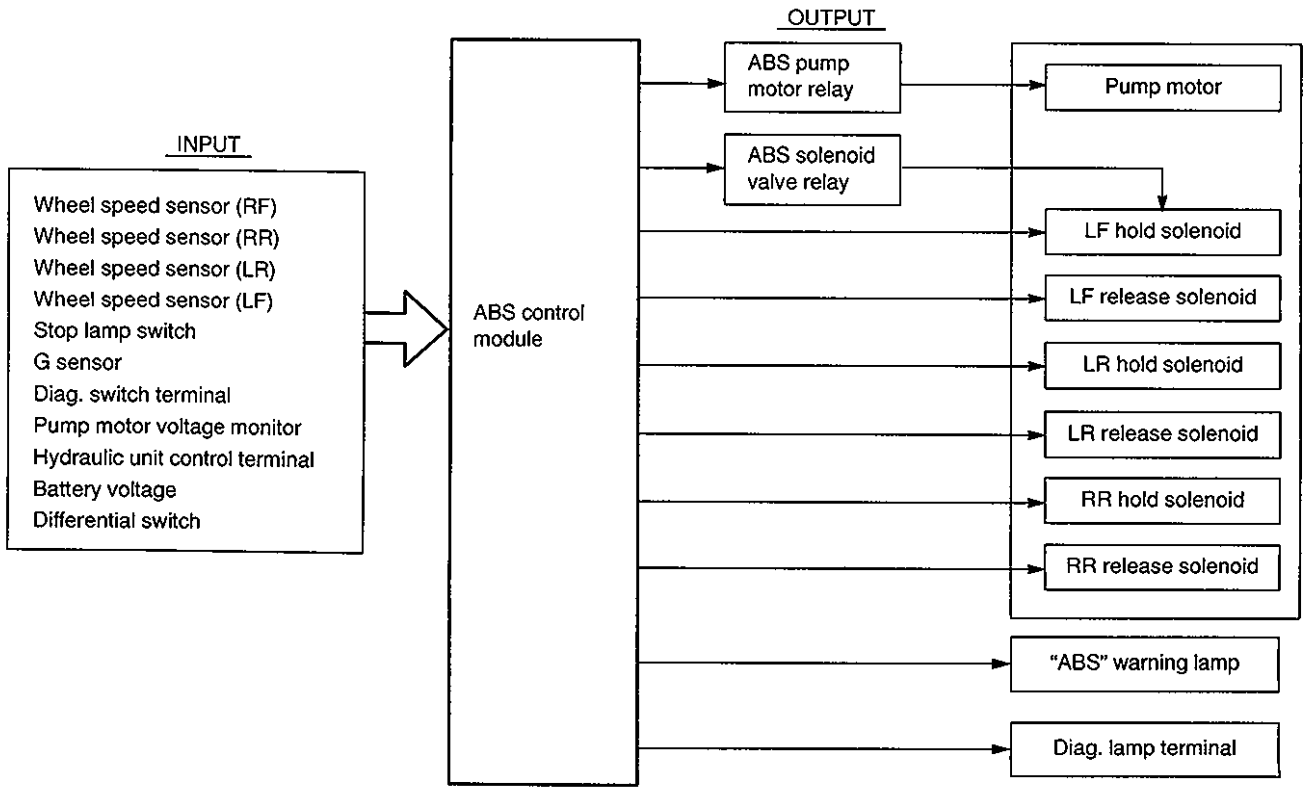

ABS COMPONENT PARTS LOCATION

For LH Steering Vehicle

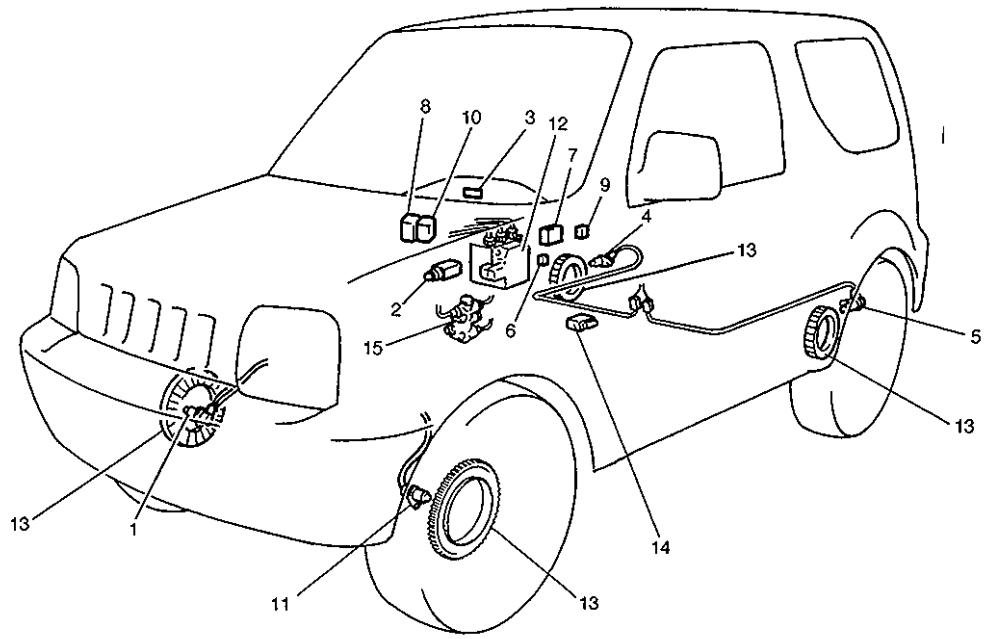

For RH Steering Vehicle

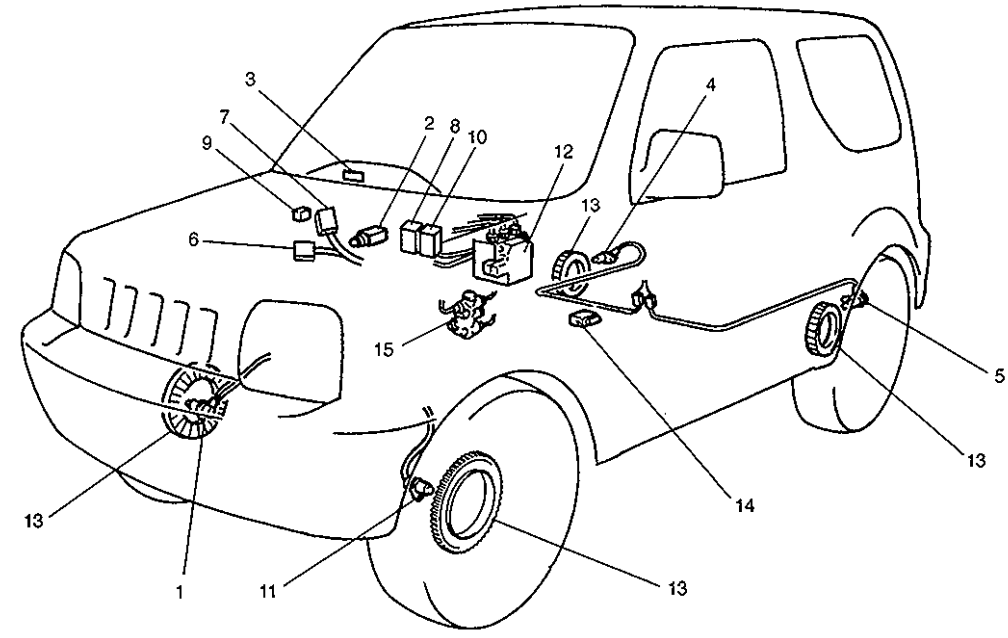

1. Wheel speed sensor (Right-front)
2. Stop lamp switch
3. "ABS" warning lamp (in combination meter)
4. Wheel speed sensor (Right-rear)
5. Wheel speed sensor (Left-rear)
6. Diode
7. ABS control module
8. ABS solenoid valve relay
9. Monitor coupler
10. ABS pump motor relay
11. Wheel speed sensor (Left-front)
12. ABS hydraulic unit
13. Wheel speed sensor rotor (ring)
14. G sensor
15. P&Differential valve

ABS CONTROL MODULE

Self-Diagnosis Function

ABS control module diagnoses conditions of the system component parts (whether or not there is any abnormality) all the time and indicates the results (warning of abnormality occurrence and DTC) through the "ABS" warning lamp as described below.

1) When ignition switch is turned ON, "ABS" warning lights for 2 seconds to check its bulb and circuit.
2) When no abnormality has been detected (the system is in good condition), "ABS" warning lamp turns OFF after 2 seconds.

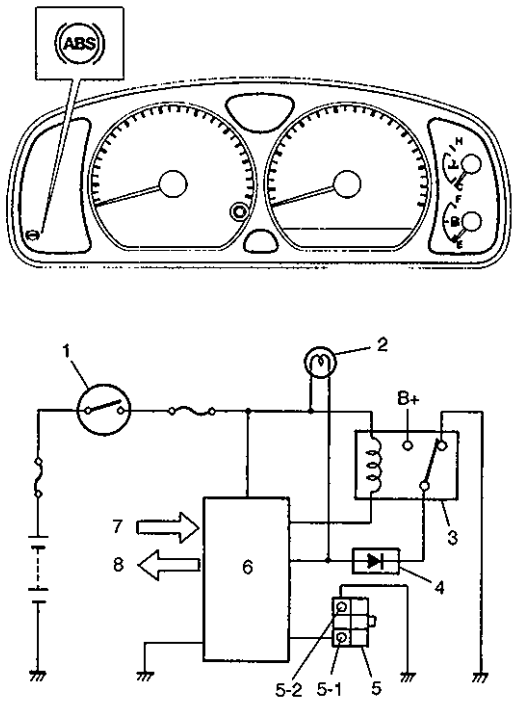

1. Ignition switch
2. "ABS" warning lamp
3. Solenoid valve relay
4. Diode
5. Monitor coupler
5-1. Diag. switch terminal
5-2. Ground terminal
6. ABS control module
7. Sensed information
8. Output

3) When an abnormality in the system is detected, "ABS" warning lamp lights and the area where that abnormality lies is stored in the memory in ABS control module.
4) When Diag. switch terminal of monitor coupler is grounded, and ABS diode removed, the abnormal area is output as DTC.

SYSTEM CONDITION		DIAGNOSIS SWITCH TERMINAL	"ABS" WARNING LAMP
In good condition at present	No trouble in the past	Open	OFF
		Grounded	DTC 12
	Trouble occurred in the past	Open	OFF
		Grounded	History DTC
Abnormality exists at present	No trouble in the past	Open	ON
		Grounded	Current DTC
	Trouble occurred in the past	Open	ON
		Grounded	Current and history DTC

NOTE:
The current code and the history code are displayed without any classification.
For procedure to clear all DTC's, refer to the item "HOW TO CLEAR DIAGNOSTIC TROUBLE CODE (DTC)" in this section.

Fail-Safe Function

When an abnormality occurs (an abnormal DTC is detected), ABS control module turns OFF the solenoid valve relay which supplies power to ABS hydraulic unit. Thus, with ABS not operating, brakes function just like the brake system of the vehicle without ABS.

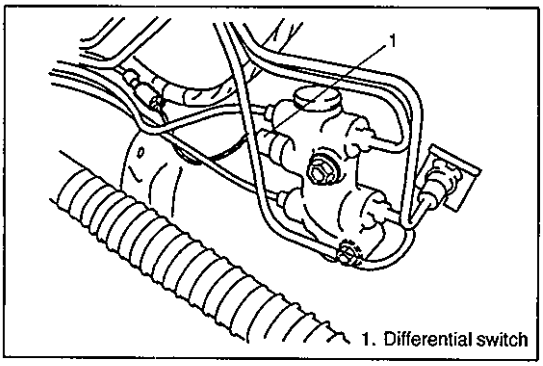

1. Differential switch

DIFFERENTIAL SWITCH

For general description and operation of this switch, refer to SECTION 5 of this manual.

DIAGNOSIS

To ensure that the trouble diagnosis is done accurately and smoothly, observe "Precautions in Diagnosing Troubles" and follow "ABS Diagnostic Flow Table".

PRECAUTION IN DIAGNOSING TROUBLES

- If the vehicles was operated in any of the following ways, "ABS" warning lamp may light momentarily but this does not indicate anything abnormal in ABS.
  –The vehicle was driven with parking brake pulled.
  –The vehicle was driven with brake dragging.
  –The vehicle was stuck in mud, sand, etc.
  –Wheel spin occurred while driving.
  –Wheel(s) was rotated while the vehicle was jacked up.
- Be sure to read "Precautions for Electronic Circuit Service" in Section 0A before inspection and observe what is written there.
- Be sure to use the trouble diagnosis procedure as described in the flow table. Failure to follow the flow table may result in incorrect diagnosis. (Some other diag. trouble code may be stored by mistake in the memory of ABS control module during inspection.)

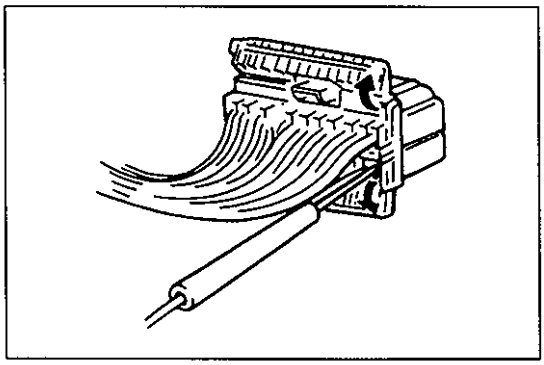

- When connecting a probe of ohmmeter or voltmeter to each terminal of ABS control module connector, be sure to connect it from wire harness side of connector.

ABS DIAGNOSTIC FLOW TABLE

Refer to the following pages for the details of each step.

STEP	ACTION	YES	NO
1	Perform customer complaint analysis, problem symptom confirmation and diagnostic trouble code check record and clearance. Is there any trouble code?	Go to Step 2.	Go to Step 5.
2	Perform driving test. Is trouble symptom identified?	Go to Step 3.	Go to Step 6.
3	Check diagnostic trouble code. Is it malfunction code?	Go to Step 4.	Go to Step 5.
4	Inspect and repair referring to applicable diagnostic trouble code table in this section. Then perform final confirmation test after clearing diagnostic trouble code. Is trouble recur?	Go to Step 7.	END.
5	Inspect and repair referring to DIAGNOSIS in Section 5. Then perform final confirmation test after clearing diagnostic trouble code. Is trouble recur?	Go to Step 7.	END.
6	Check for intermittent problems referring to INTERMITTENT AND POOR CONNECTION in Section 0A and related circuit of trouble code recorded in Step 3. Then perform final confirmation test after clearing diagnostic trouble code. Is trouble recur?	Go to Step 7.	END.
7	Perform diagnostic trouble code check record and clearance. Is there any trouble code?	Go to Step 4.	Go to Step 5.

1. CUSTOMER COMPLAINT ANALYSIS

Record details of the problem (failure, complaint) and how it occurred as described by the customer.
For this purpose, use of such a questionnaire form as shown below will facilitate collecting information to the point required for proper analysis and diagnosis.

CUSTOMER QUESTIONNAIRE (EXAMPLE)

Customer's name:	Model:	VIN:	
Date of issue:	Date Reg.	Date of problem:	Mileage:

Problem Symptoms	• "ABS" warning light abnormal: fails to turn on/fails to go off/ flashes • Abnormal noise while vehicle is running: from motor, from valve, other_____ • Wheel locks at braking: • Pump motor does not stop (running): • Braking does not work: • Other_____
Frequency of Occurrence	• Continuous/Intermittent (times a day, a month)/ other_____
Conditions for Occurrence of Problem	• Vehicle at stop & ignition switch ON: • When starting: at initial start only/ at every start/Other_____ • Vehicle speed: while: while accelerating/while decelerating/at stop/ while turning/while running at constant speed/ other_____ • Road surface condition: Paved road/rough road/snow-covered road/other_____ • Chain equipment:
Environmental Condition	• Weather: fair/cloudy/rain/snow/other_____ • Temperature: °F (°C)
Diagnostic Trouble Code	• First check: Normal code/malfunction code ( ) • Second check after test drive: Normal code/malfunction code ( )

2. PROBLEM SYMPTOM CONFIRMATION

Check if what the customer claimed in Step 1 is actually found in the vehicle and if the symptom is found, determine whether it is identified as a failure. (This step should be shared with the customer if possible.) When "ABS" warning lamp is not operating correctly, proceed to "Diagnostic Flow Table-A, B or C" in this section.

3. DIAGNOSTIC TROUBLE CODE (DTC) CHECK, RECORD AND CLEARANCE

Perform "Diagnostic Trouble Code Check" in p. 5E-11 or 5E-12, record it and then clear it referring to p. 5E-12.
If the malfunction DTC which was once displayed and then cleared cannot be detected (indicated) again when the ignition switch is turned ON, attempt to diagnose the trouble based on the DTC recorded in this step may mislead the diagnosis or make diagnosing difficult. Proceed to Step 4 to check ABS control module for proper self-diagnosis function.
If the malfunction DTC which was once displayed and then cleared can be detected (indicated) again when ignition switch is turned ON, proceed to Step 5.

4. DRIVING TEST

Test drive the vehicle at 40 km/h for more than a minute and check if any trouble symptom (such as abnormal lighting of "ABS" warning lamp) exists.
If the malfunction DTC is confirmed again at ignition switch ON, driving test as described in above is not necessary. Proceed to Step 5.

5. DIAGNOSTIC TROUBLE CODE CHECK

Recheck diagnostic trouble code referring to p. 5E-11 or p. 5E-12.

6. DIAGNOSTIC TROUBLE CODE FLOW TABLE

According to Diagnostic Flow Table for the diagnostic trouble code confirmed in Step 5, locate the cause of the trouble, namely in a sensor, switch, wire harness, connector, actuator, ABS control module or other part and repair or replace faulty parts.

7. "DIAGNOSIS" IN SECTION 5

Check the parts or system suspected as a possible cause referring to "Diagnosis" in Section 5 and based on symptoms appearing on the vehicle (symptoms obtained through Step 1, 2 and 4) and repair or replace faulty parts, if any.

8. CHECK FOR INTERMITTENT PROBLEM

Check parts where an intermittent trouble is easy to occur (e.g., wire harness, connector, etc.), referring to INTERMITTENT TROUBLE in Section 0A and related circuit of trouble code recorded in Step 3.

9. FINAL CONFIRMATION TEST

Confirm that the problem symptom has gone and the ABS is free from any abnormal conditions. If what has been repaired is related to the malfunction DTC, clear the DTC once and perform test driving and confirm that a normal code is indicated.

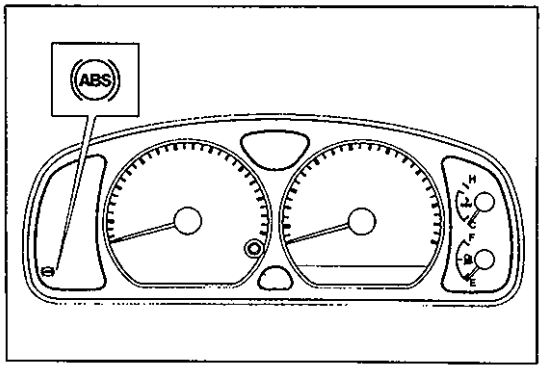

"ABS" WARNING LAMP CHECK

Turn ignition switch ON and check that "ABS" warning lamp comes ON for about 2 seconds and then goes OFF. If any faulty condition is found, advance to Diagnostic Flow Table-A, B or C.

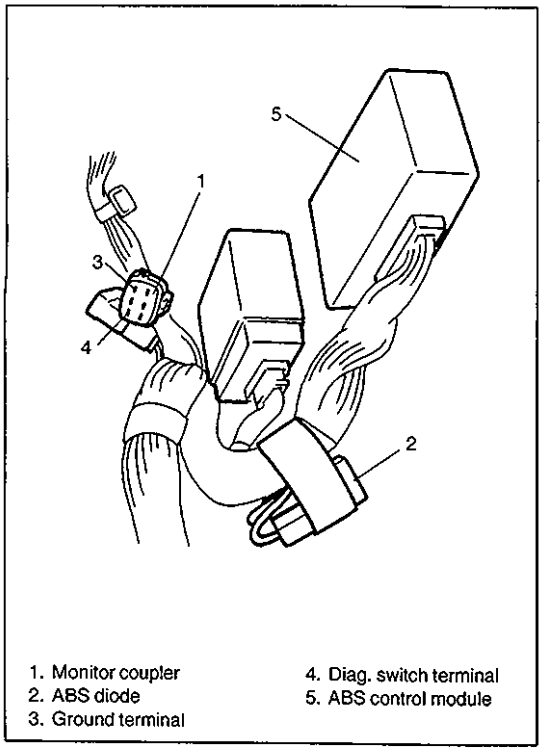

1. Monitor coupler
2. ABS diode
3. Ground terminal
4. Diag. switch terminal
5. ABS control module

DIAGNOSTIC TROUBLE CODE (DTC) CHECK

1) Test drive vehicle at 40 km/h for more than a minute.
2) Stop vehicle and while IG switch ON, ground diagnosis switch terminal of monitor coupler with service wire. Then remove ABS diode.
3) Read the flashing "ABS" warning lamp which represents DTC as shown in example below and write it down. When more than 2 DTCs are stored in memory, flashing for each DTC is repeated three times starting with the smallest DTC number in increasing order.
   For details of DTC, refer to "DTC Table".

Example : When right-front wheel speed sensor circuit opens (DTC 21)

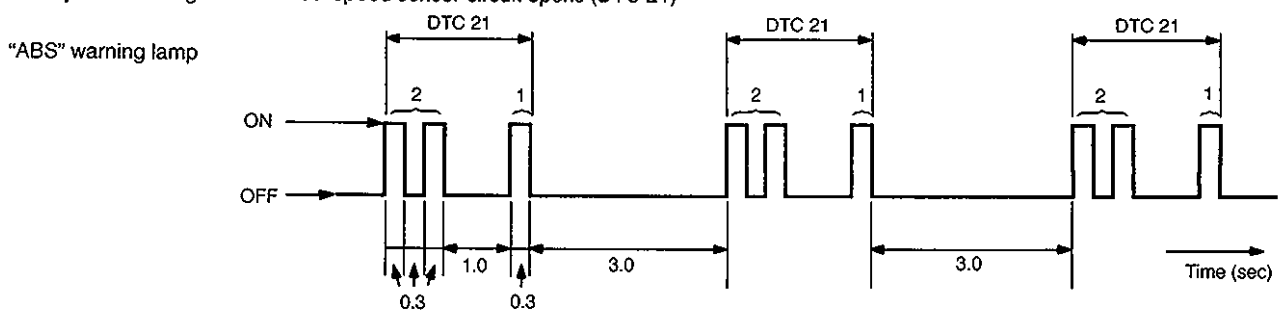

NOTE:
"ABS" warning lamp indicates only following DTCs, DTC 12 which means that no malfunction DTC is stored and history DTC which indicates history trouble area. When there is current trouble, "ABS" warning lamp remains ON and therefore DTC is not indicated.

4) After completing the check, turn ignition switch off, disconnect service wire from monitor coupler, and install ABS diode.

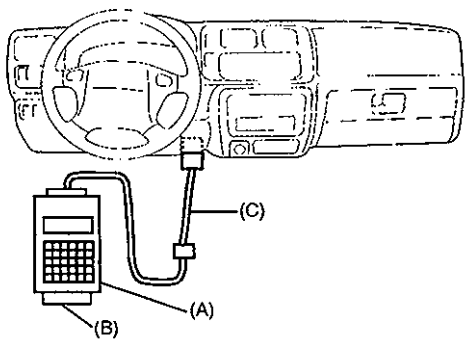

DTC CHECK (USING SUZUKI SCAN TOOL)

1) Connect SUZUKI scan tool to data link connector after setting cartridge for ABS to it.

Special Tool
(A): 09931-76011 (SUZUKI scan tool)
(B): Mass strage cartridge
(C): 09931-76030 (16/14 pin DLC cable)

2) Turn ignition switch ON.
3) Read DTC according to instructions displayed on SUZUKI scan tool and print it or write it down. Refer to SUZUKI scan tool operator's manual for further details.
4) After completing the check, turn ignition switch off and disconnect SUZUKI scan tool from DLC.

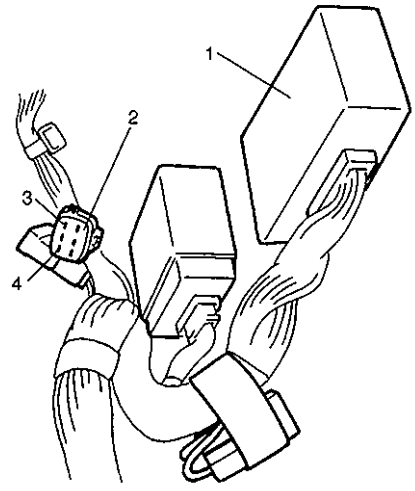

1. ABS control module
2. Monitor coupler
3. Ground terminal
4. Diag. switch terminal

DIAGNOSTIC TROUBLE CODE (DTC) CLEARANCE

WARNING:
When preforming a driving test, select a safe place where there is neither any traffic nor any traffic accident possibility and be very careful during testing to avoid occurrence of an accident.

After repair or replace malfunction part(s), clear all DTC's by preforming the following procedure.

1) Turn ignition switch OFF.
2) Using service wire, connect diag. switch terminal of diag. connector to diag. ground terminal.
3) With connection described in above step 2) maintained, turn ignition switch ON.
4) Repeat ON/OFF operation of service wire at diag. ground terminal at least 5 times within 10 seconds.

NOTE:
Service wire ON time must be for 0.1 second and more.

5) Turn ignition switch OFF and disconnect service wire from diag. connector.
6) Perform DRIVING TEST and DTC CHECK and confirm that normal DTC (DTC 12) is displayed; not malfunction DTC.

DIAGNOSTIC TROUBLE CODE (DTC) TABLE

DTC	ABS warning light flashing pattern	DIAGNOSTIC ITEMS	
12	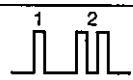	Normal	
15	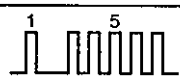	G sensor circuit	
16	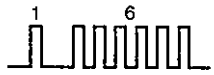	Stop lamp switch circuit	
21	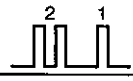	RF	Wheel speed sensor circuit and/or sensor ring
25		LF	
31	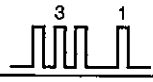	RR	
35		LR	
22	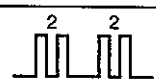	RF	
26	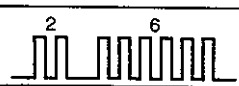	LF	
32	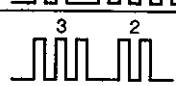	RR	
36		LR	
41	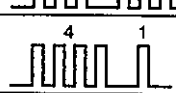	RF	ABS solenoid valve circuit
42	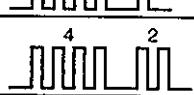		
45		LF	
46			
55		R	
56			
57	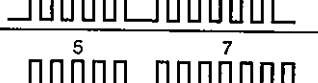	Power source	
61		ABS pump motor and/or motor relay circuit	
63	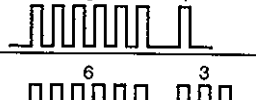	ABS solenoid valve circuit	
71	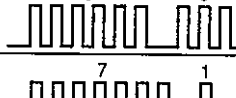	ABS control module	

SYSTEM CIRCUIT

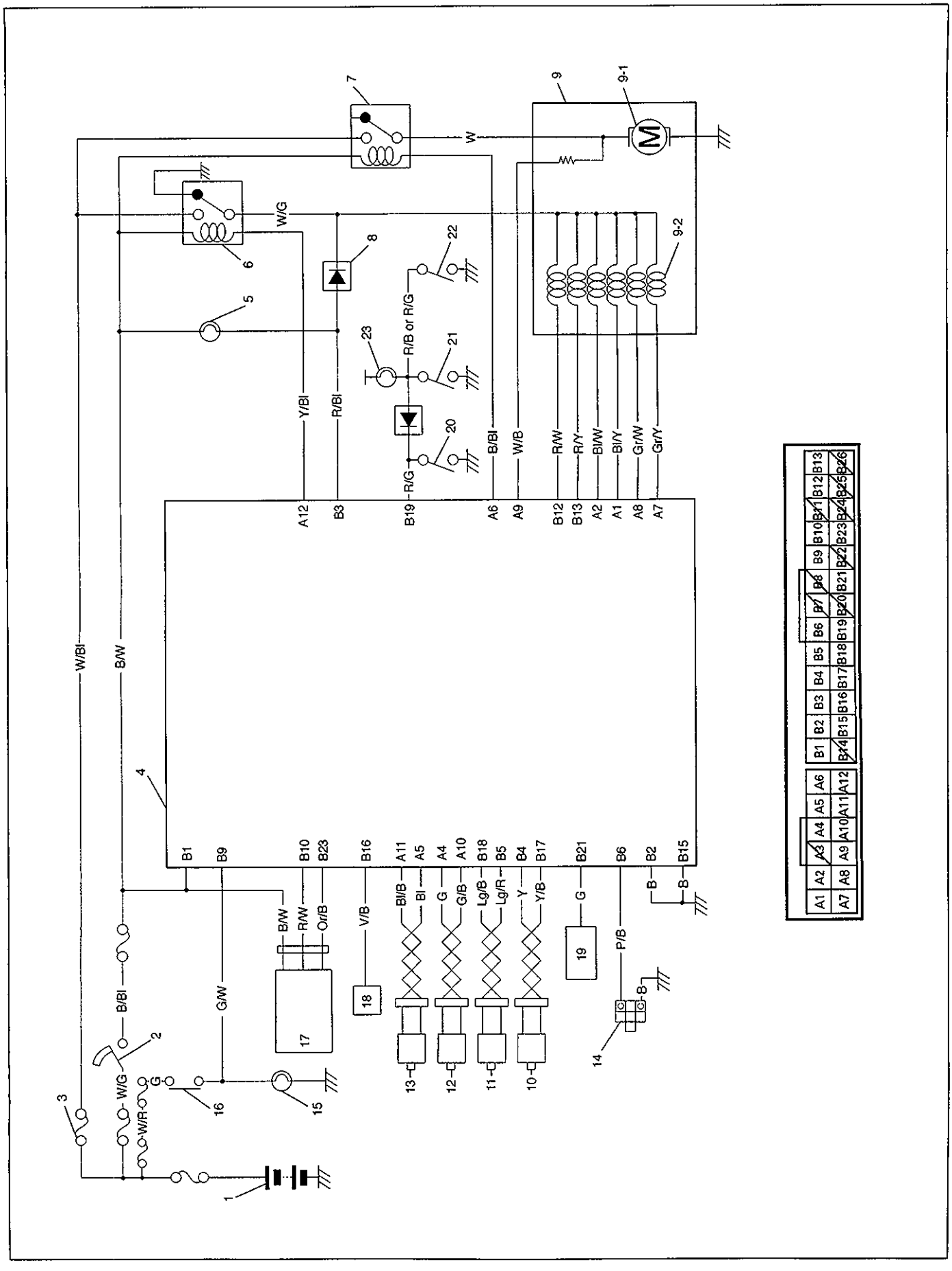

1. Battery
2. Ignition switch
3. Fuse
4. ABS control module
5. "ABS" warning lamp
6. ABS solenoid valve relay
7. ABS pump motor relay
8. Diode
9. ABS hydraulic unit
   9-1. Pump motor
   9-2. Solenoid valves
10. Right-rear wheel speed sensor
11. Left-rear wheel speed sensor
12. Right-front wheel speed sensor
13. Left-front wheel speed sensor
14. Monitor coupler
15. Stop lamp
16. Stop lamp switch
17. G sensor
18. Data link connector
19. ECM
20. Differential switch
21. Parking brake switch
22. Brake fluid level switch
23. Brake warning (parking) lamp

Wire color

B : Black
B/Bl : Black/Blue
B/W : Black/White
Bl : Blue
Bl/B : Blue/Black
Bl/W : Blue/White
Bl/Y : Blue/Yellow
G : Green
G/B : Green/Black
G/W : Green/White
Gr/W: Gray/White
Gr/W: Gray/Yellow
Lg/B : Light green/Black
Lg/R : Light green/Red
Or/B : Orange/Black
P/B : Pink/Black
R/B : Red/Black
R/Bl : Red/Blue
R/G : Red/Green
R/Y : Red/Yellow
R/W : Red/White
V/B : Violet/Black
W : White
W/Bl : White/Blue
W/G : White/Green
W/R : White/Red
Y : Yellow
Y/B : Yellow/Black
Y/Bl : Yellow/Blue
Y/W : Yellow/White

TERMINAL	CIRCUIT
A1	Release solenoid valve (left-front)
A2	Hold solenoid valve (left-front)
A3	—
A4	Wheel speed sensor (+) (right-front)
A5	Wheel speed sensor (–) (left-front)
A6	ABS pump motor relay
A7	Release solenoid valve (rear)
A8	Hold solenoid valve (rear)
A9	Pump motor voltage monitor
A10	Wheel speed sensor (–) (right-front)
A11	Wheel speed sensor (+) (left-front)
A12	Solenoid valve relay

TERMINAL	CIRCUIT
B1	Ignition switch
B2	Ground 1
B3	"ABS" warning lamp
B4	Wheel speed sensor (+) (right-rear)
B5	Wheel speed sensor (–) (left-rear)
B6	Diagnosis switch
B7	—
B8	—
B9	Stop lamp switch
B10	G sensor signal
B11	—
B12	Hold solenoid valve (right-front)
B13	Release solenoid valve (right-front)
B14	—
B15	Ground 2
B16	Scan tool
B17	Wheel speed sensor (–) (right-rear)
B18	Wheel speed sensor (+) (left-rear)
B19	Differential switch
B20	—
B21	Idle up signal
B22	—
B23	G sensor ground
B24	—
B25	—
B26	—

TABLE–A "ABS" WARNING LAMP CIRCUIT CHECK (LAMP DOES NOT COME "ON" AT IGNITION SWITCH ON)

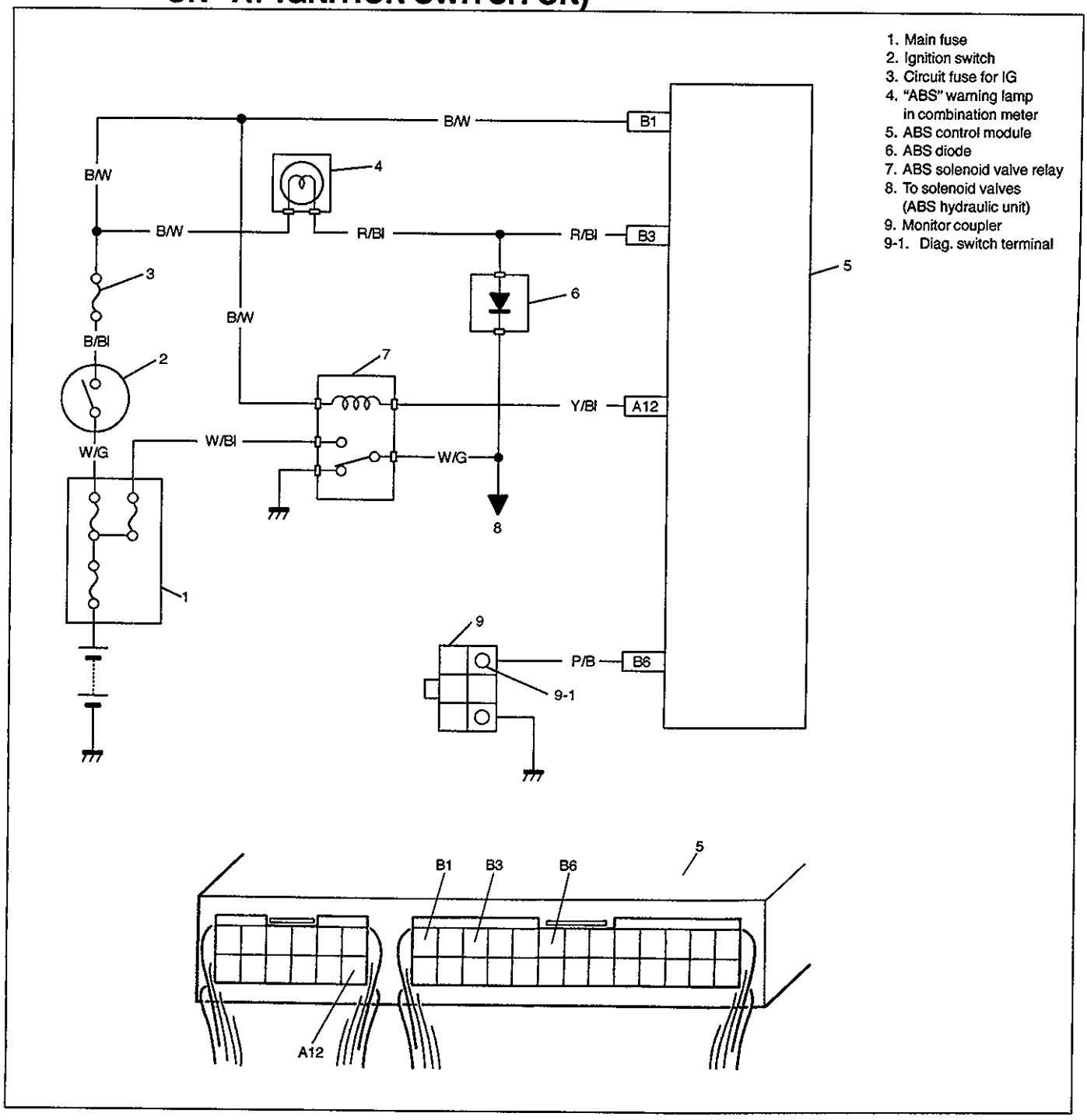

CIRCUIT DESCRIPTION

Operation (ON/OFF) of the "ABS" warning lamp is controlled by the ABS control module and the ABS solenoid valve relay. When the ignition switch is turned ON, the ABS control module switches the contact point of the ABS solenoid valve relay from the lamp circuit side (relay OFF) to the hydraulic unit circuit side (relay ON).

If the Antilock Brake System is in good condition, the ABS control module turns the "ABS" warning lamp ON at the ignition switch ON, keeps it ON for 2 seconds only (It operates "initial check" in this 2 seconds) and then turns it OFF. If an abnormality in the system is detected, the lamp is turned ON by both ABS control module and ABS solenoid valve relay. Also, it is turned ON by the ABS solenoid valve relay when the connector of the ABS control module was disconnected.

INSPECTION

STEP	ACTION	YES	NO
1	Check connection of ABS diode and ABS control module harness couplers. Are they connected correctly?	Go to Step 2.	Connect them securely.
2	1) Turn IG switch ON 2) Do other warning lamps come ON?	Go to Step 3.	Go to Step 4.
3	1) Remove combination meter. 2) Is light bulb of ABS warning lamp in good condition?	"R/Bl" circuit open or poor connection to combination meter at terminal "R/Bl".	Replace light bulb.
4	Is IG fuse in good condition?	Open in "B/W" wire to combination meter or poor connection.	Repair and replace.

TABLE–B "ABS" WARNING LAMP CIRCUIT CHECK (LAMP COMES "ON" STEADY)

Refer to TABLE–A for System Circuit Diagram and Circuit Description.

INSPECTION

STEP	ACTION	YES	NO
1	Perform Diagnostic Trouble Code check. Is there any DTC?	Go to Step 2 of ABS Diagnostic Flow Table in this section.	Go to Step 2.
2	1) Turn IG switch OFF. 2) Disconnect ABS control module connectors, then disconnect 13pin connector from combination meter. 3) Measure resistance from module connector terminal "B3" to body ground. Is it infinity?	Substitute a known-good ABS control module and recheck.	R/Bl wire shorted to ground.

TABLE–C "ABS" WARNING LAMP CIRCUIT CHECK (THE LAMP FLASHES CONTINUOUSLY WHILE IGNITION SWITCH IS ON)

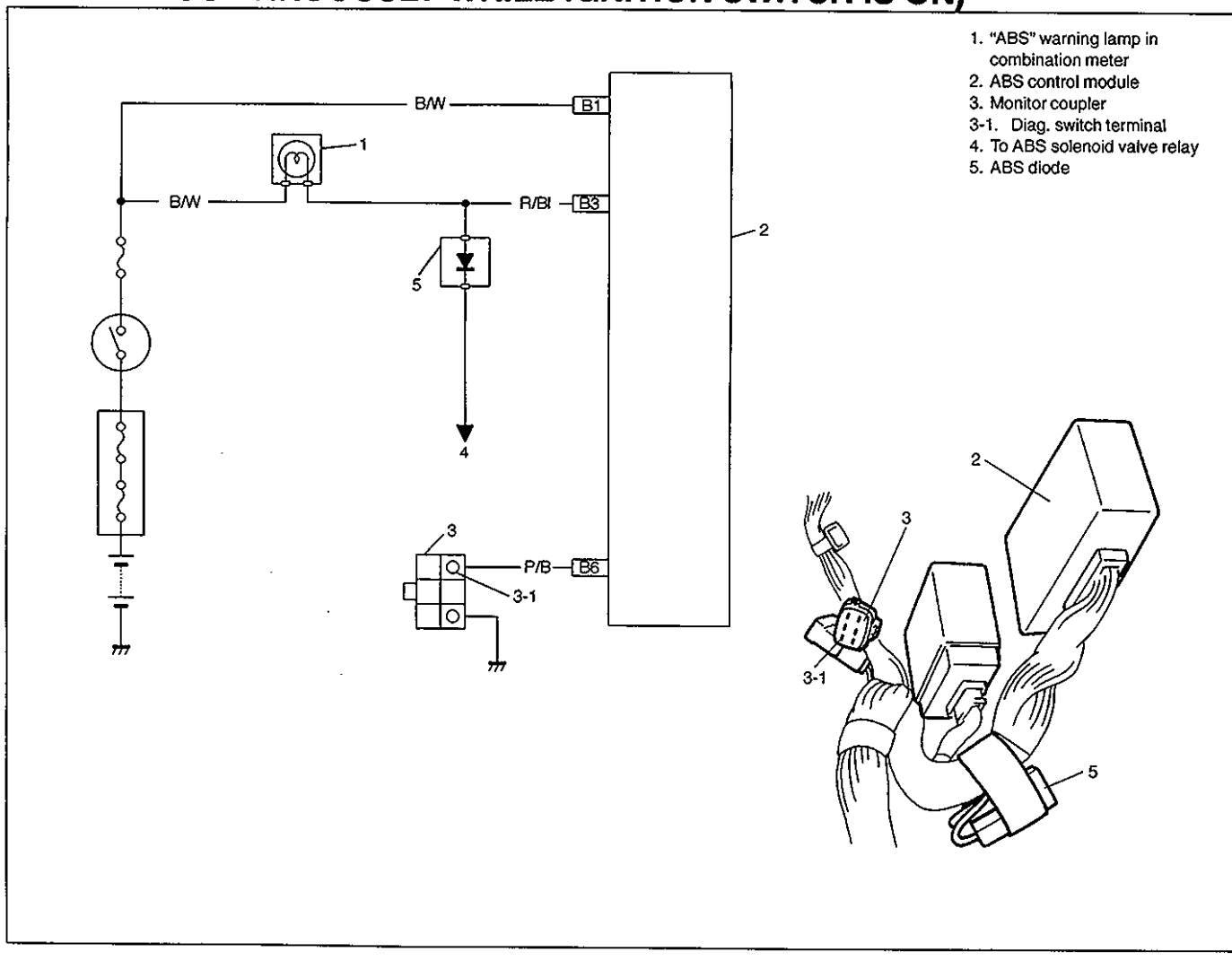

CIRCUIT DESCRIPTION

When the diag. switch terminal is shorted or connected to the ground with the ignition switch ON and ABS diode removed, the diagnostic trouble code (DTC) is indicated by flashing of the "ABS" warning lamp only in following cases.

- Normal DTC (12) is indicated if no malfunction DTC is detected in the ABS.
- A history and/or current malfunction DTC is indicated by flashing of the lamp.

INSPECTION

STEP	ACTION	YES	NO
1	Is diagnostic switch terminal connected to ground via service wire and ABS diode removed?	Go to Step 2.	Substitute a known-good ABS control module and re-check.
2	1) Turn IG switch ON. 2) Does flashing of ABS warning lamp indicates DTC?	Go to Step 2 of ABS Diagnostic Flow Table in this section.	Substitute a known-good ABS control module and re-check.

DTC 15 – G SENSOR CIRCUIT

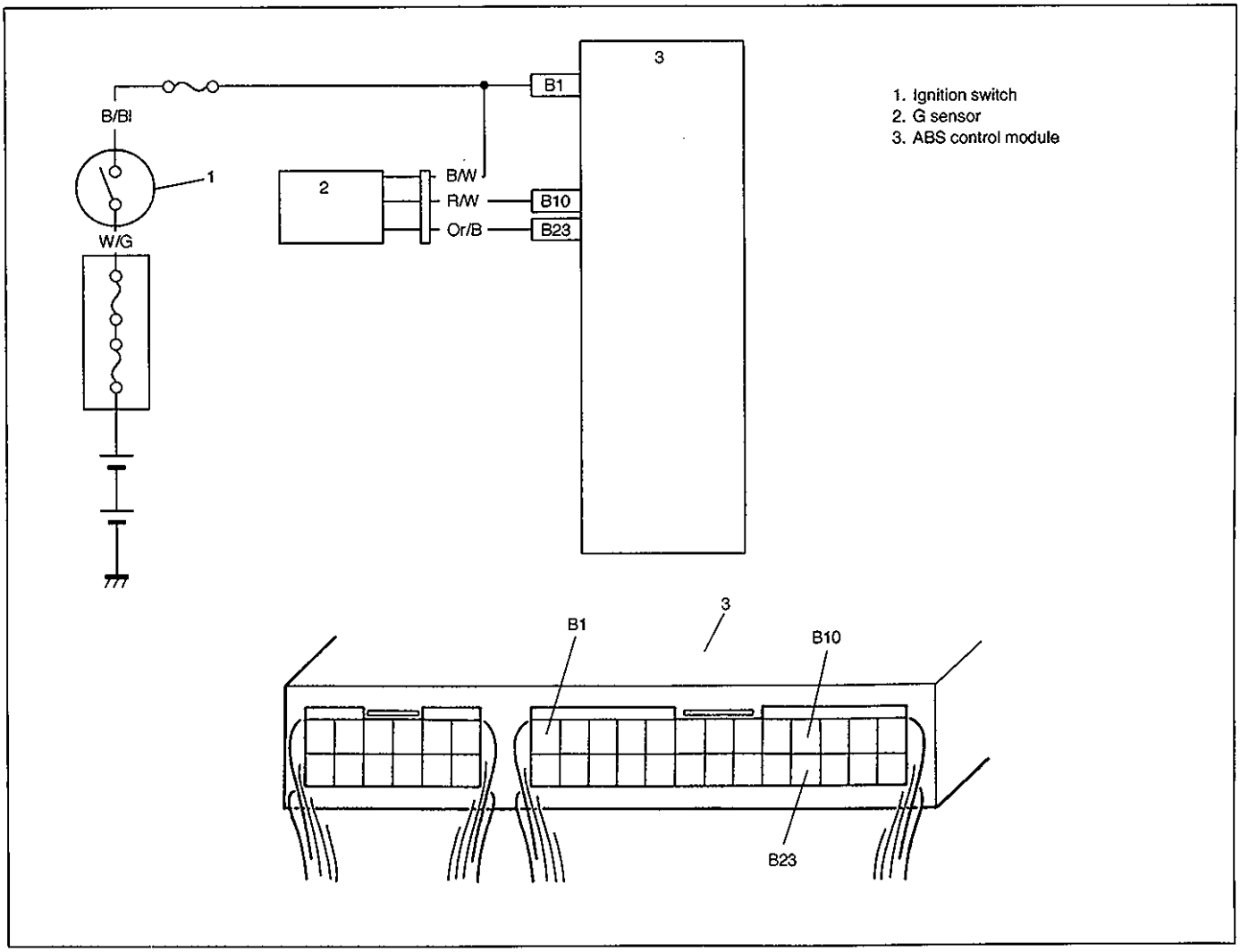

DESCRIPTION

While a vehicle is at stop or running, if the potential difference between the sensor signal terminal "B10" and the sensor ground terminal "B23" is not within the specified voltage value, or if the signal voltage while at a stop dose not vary from that while running ,this DTC is set.

Therefore, this DTC may be set when a vehicle is lifted up and its wheel(s) is turned. In such case,clear the DTC and check again.

INSPECTION

STEP	ACTION	YES	NO
1	1) Is G sensor installed to floor securely?	Go to Step 2.	Tighten sensor screws securely. If not, use new screws.
2	1) Ignition switch "OFF". 2) Remove G sensor. 3) Check G sensor referring to item "INSPECTION of G SENSOR". Is it in good condition?	Go to Step 3.	Replace G sensor.
3	1) Disconnect connectors from ABS control module and G sensor. 2) Check for proper connection to ABS control module at terminals "B10" and "B23". 3) If OK then turn ignition switch ON and measure voltage between "B/W" terminal of sensor connector and body ground. Is it 10-14 V?	Go to Step 4.	" B/W" circuit open.
4	1) Measure voltage between "R/W" terminal of sensor connector and body ground. Is it 0V?	Go to Step 5.	"R/W" circuit shorted to power circuit.
5	1) Ignition switch "OFF". 2) Check that "R/W" circuit is free from open or short to ground and "Or/B" circuit. Is it in good condition?	"Or/B" circuit open. If circuit is OK, substitute a known-good ABS control module.	"R/W" circuit open or shorted to ground or "Or/B" circuit.

DTC 16 – STOP LAMP CIRCUIT

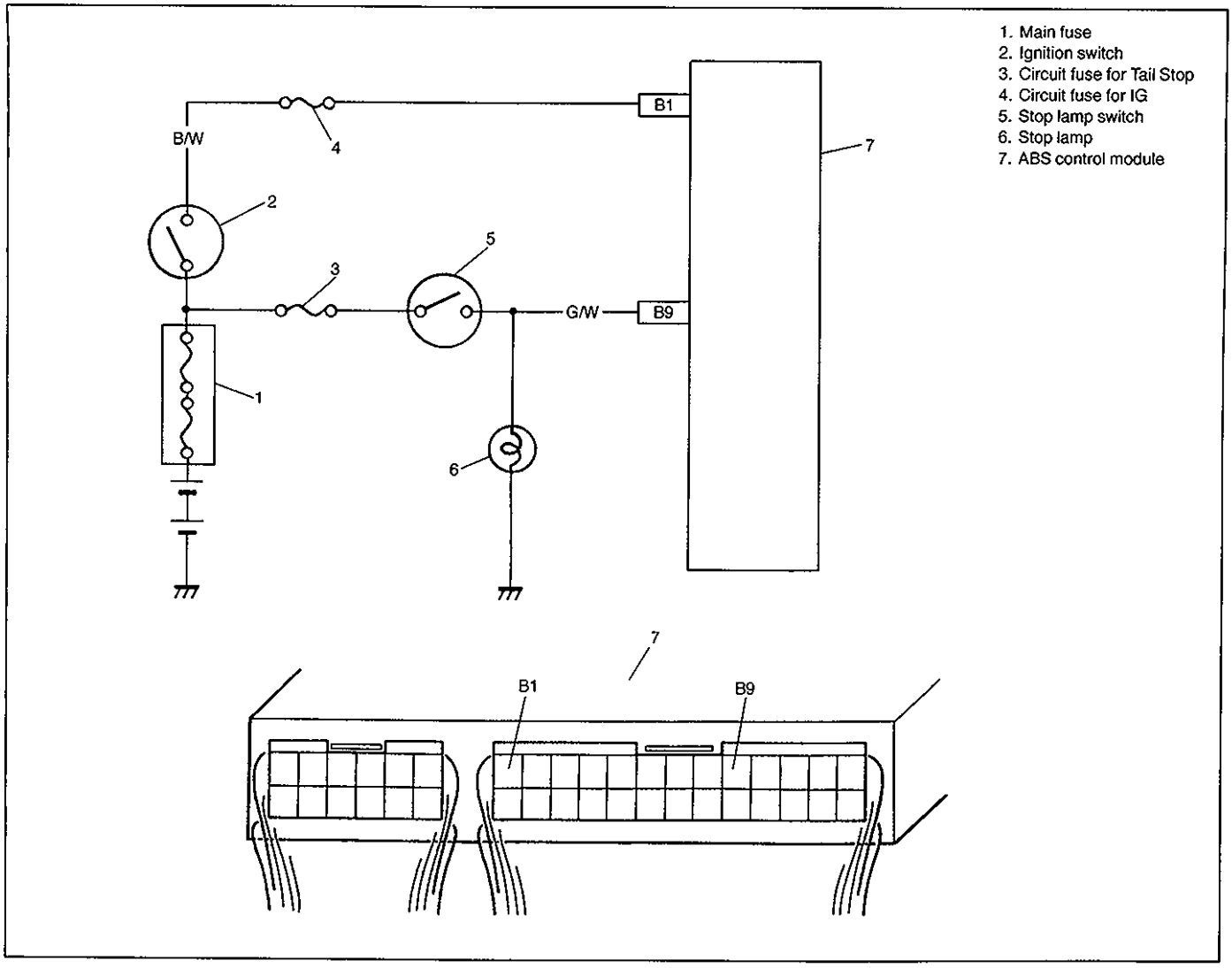

DESCRIPTION

The ABS control module monitors the voltage at the stop lamp while the ignition switch is ON. When the voltage is without the specified range at terminal "B9", a DTC will be set.

INSPECTION

STEP	ACTION	YES	NO
1	1) Turn IG switch OFF. 2) Depress the brake pedal. 3) Measure the voltage between the stop lamp terminal "B9" and body ground. Is it 3.3 – 9.4 V?	"G/W" circuit open.	Check for proper connection to ABS control module at terminal "B9". If OK, substitute a known-good ABS control module and recheck.

BLANK

DTC 21, 22 – RIGHT-FRONT WHEEL SPEED SENSOR CIRCUIT OR SENSOR RING

25, 26 – LEFT-FRONT WHEEL SPEED SENSOR CIRCUIT OR SENSOR RING

31, 32 – RIGHT-REAR WHEEL SPEED SENSOR CIRCUIT OR SENSOR RING

35, 36 – LEFT-REAR WHEEL SPEED SENSOR CIRCUIT OR SENSOR RING

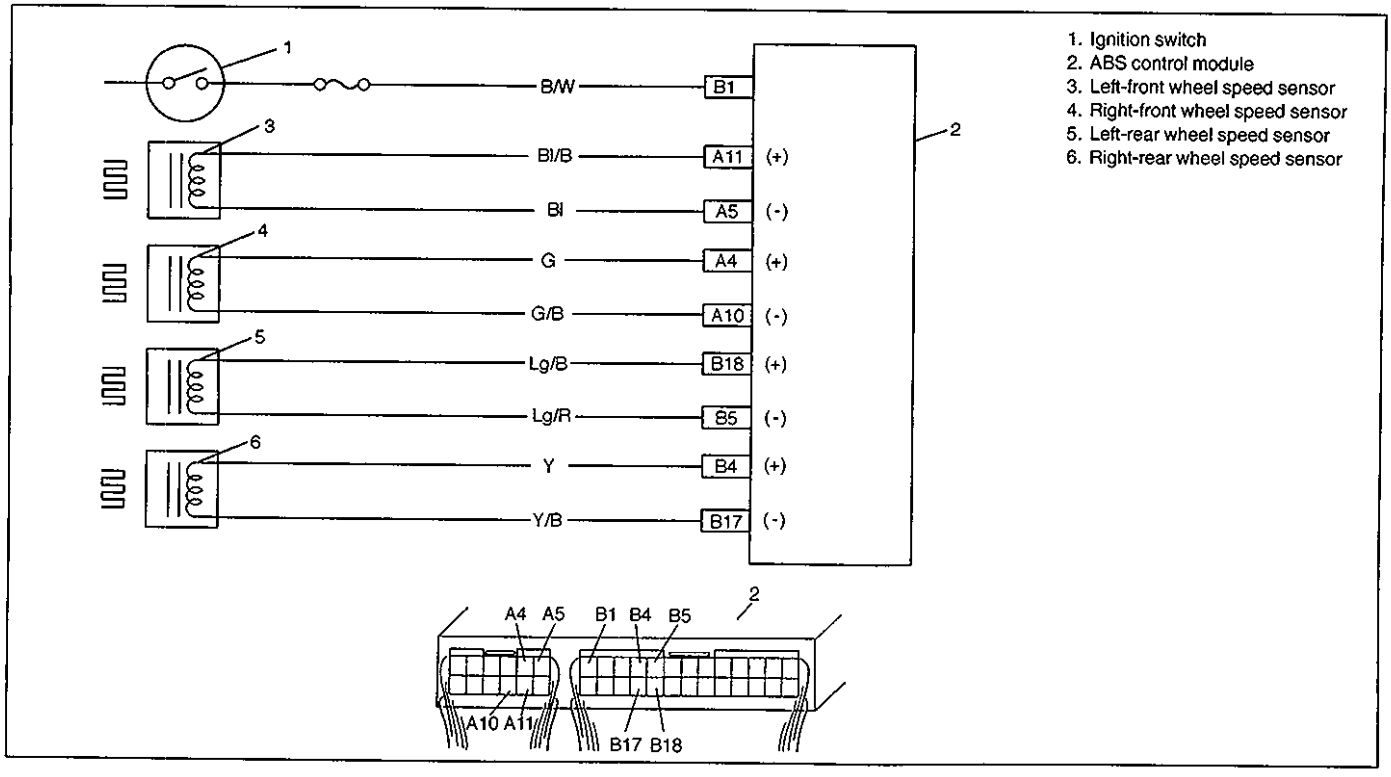

DESCRIPTION

The ABS control module monitors the voltage at the positive (+) terminal of each sensor while the ignition switch is ON. When the voltage is not within the specified range, an applicable DTC will be set. Also, when no sensor signal is inputted at starting or while running, an applicable DTC will be set.

NOTE:

When the vehicle was operated in any of the following ways, one of these DTCs may be set even when the sensor is in good condition. If such possibility is suspected, repair the trouble (dragging of brake, etc.) of the vehicle, clear DTC once and then after performing the driving test as described in Step 2 of "ABS DIAG. FLOW TABLE", check whether or not any abnormality exists.

–The vehicle was driven with parking brake pulled.

–The vehicle was driven with brake dragging.

–Wheel spin occurred while driving.

–Wheel(s) was turned while the vehicle was jacked up.

–The vehicle was stuck.

INSPECTION

STEP	ACTION	YES	NO
1	1) Disconnect applicable ABS wheel speed sensor coupler with IG switch OFF. 2) Measure the resistance between terminals of the ABS wheel speed sensor side coupler. Is it 1.4-1.8kΩ (at 20°C, 68°F)?	Go to Step 2.	Replace ABS wheel speed sensor assembly.
2	1) Turn IG switch OFF. 2) Disconnect ABS control module connector. 3) Check for proper connection to ABS control module at each sensor terminal. 4) If OK, then turn IG switch ON and measure voltage between sensor positive terminal of module connector and body ground. Is it 0V?	Go to Step 3.	ABS wheel speed sensor positive circuit shorted to power.
3	1) Turn IG switch OFF. 2) Connect ABS wheel sensor coupler. 3) Measure resistance between ABS wheel speed sensor positive terminal and negative terminal of module connector, between positive terminal and body ground. Are measured resistance values within each specified range described in above step 1?	Go to Step 4.	Circuit open or shorted to ground.
4	1) Remove applicable ABS wheel speed sensor. 2) Check sensor for damage or foreign material attached. Is it in good condition?	Go to Step 5.	Clean, repair or replace.
5	Check visually through ABS wheel speed sensor installation hole (for front wheels) or remove rear drum (for rear wheels) and check for the following: • Rotor serration (teeth) neither missing nor damaged. • No foreign material being attached. • Rotor not being eccentric. • Wheel bearing free from excessive play. Are they in good condition?	Go to Step 6.	Clean, repair or replace.
6	1) Install ABS wheel sensor to knuckle. 2) Tighten sensor bolt to specified torque and check that there is no clearance between sensor and knuckle. Is it OK?	Go to Step 7.	Replace ABS wheel speed sensor.
7	Referring to FRONT WHEEL SPEED SENSOR REFERENCE or REAR WHEEL SPEED SENSOR REFERENCE in this section, check output voltage or waveform obtained?	Substitute a known-good ABS control module and recheck.	Replace sensor and recheck.

DTC 41 – RIGHT-FRONT HOLD SOLENOID CIRCUIT
45 – LEFT-FRONT HOLD SOLENOID CIRCUIT
55 – REAR HOLD SOLENOID CIRCUIT
42 – RIGHT-FRONT RELEASE SOLENOID CIRCUIT
46 – LEFT-FRONT RELEASE SOLENOID CIRCUIT
56 – REAR RELEASE SOLENOID CIRCUIT

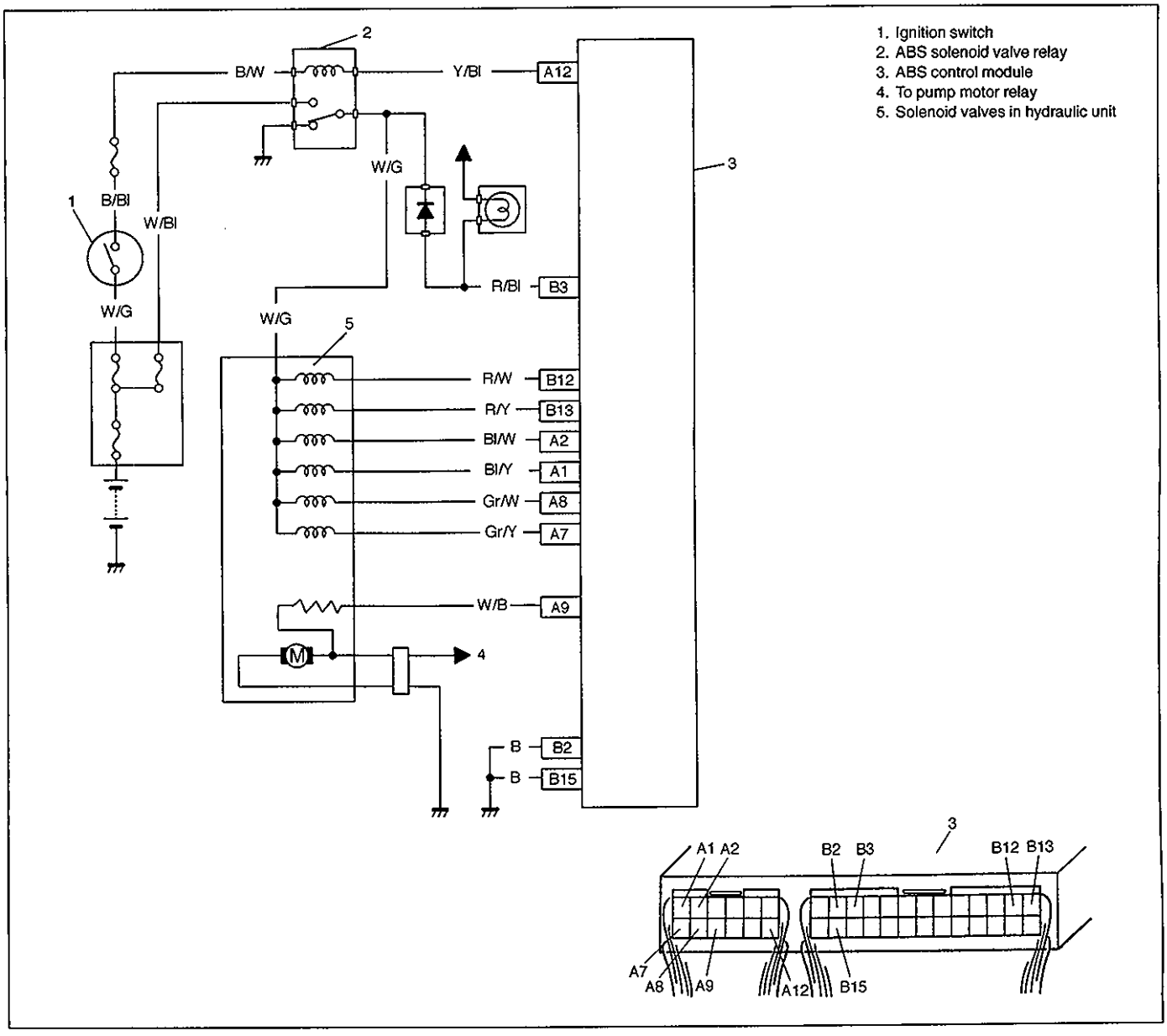

DESCRIPTION

This DTC is set when the voltage at solenoid valve output terminal is extremely low even through ABS control module sends "Solenoid valve OFF" signal, or the voltage at solenoid valve output terminal is extremely high even though ABS control module sends "Solenoid valve ON" signal.

INSPECTION

STEP	ACTION	YES	NO
1	1) Turn IG switch OFF and disconnect couplers from ABS hydraulic unit. 2) Check for proper connection to ABS hydraulic unit solenoid terminals. 3) If OK, then check the applicable solenoid for resistance and short to ground referring to HYDRAULIC UNIT, SOLENOID VALVE INSPECTION in this section. Is it in good condition?	Go to Step 2.	Replace ABS hydraulic unit.
2	1) Turn IG switch OFF. 2) Measure resistance between solenoid coupler terminal "W/G" of harness side and body ground. Is there continuity?	Go to Step 3.	"W/G" circuit open.
3	1) Disconnect connectors from ABS control module. 2) Check for proper connection to ABS control module at solenoid circuit terminal "A1", "A2", "A7", "A8", "B12", or "B13". 3) If OK, then measure voltage between terminal "A1", "A2", "A7", "A8", "B12", or "B13" of module connector and body ground with IG switch ON. Is it 0V?	Go to step 4.	"R/W", "R/Y", "Bl/W", "Bl/Y", "Gr/W" or "Gr/Y" circuit shorted to power circuit.
4	1) Turn IG switch OFF 2) Connect coupler to ABS hydraulic unit. 3) Measure resistance between terminal "A1", "A2", "A7", "A8", "B12", or "B13" of module connector and body ground. Is there continuity ?	Substitute a known-good ABS control module and recheck.	"R/W", "R/Y", "Bl/W", "Bl/Y", "Gr/W" or "Gr/Y" circuit open, poor connection or shorted to ground.

Solenoid Valve	Terminal Number	Lead Wire Color	Solenoid Valve	Terminal Number	Lead Wire Color
RF hold	B12	R	RF release	B13	R/W
LF hold	A2	Bl	LF release	A1	Bl/W
R hold	A8	Y	R release	A7	Y/W

DTC 57 – POWER SOURCE CIRCUIT

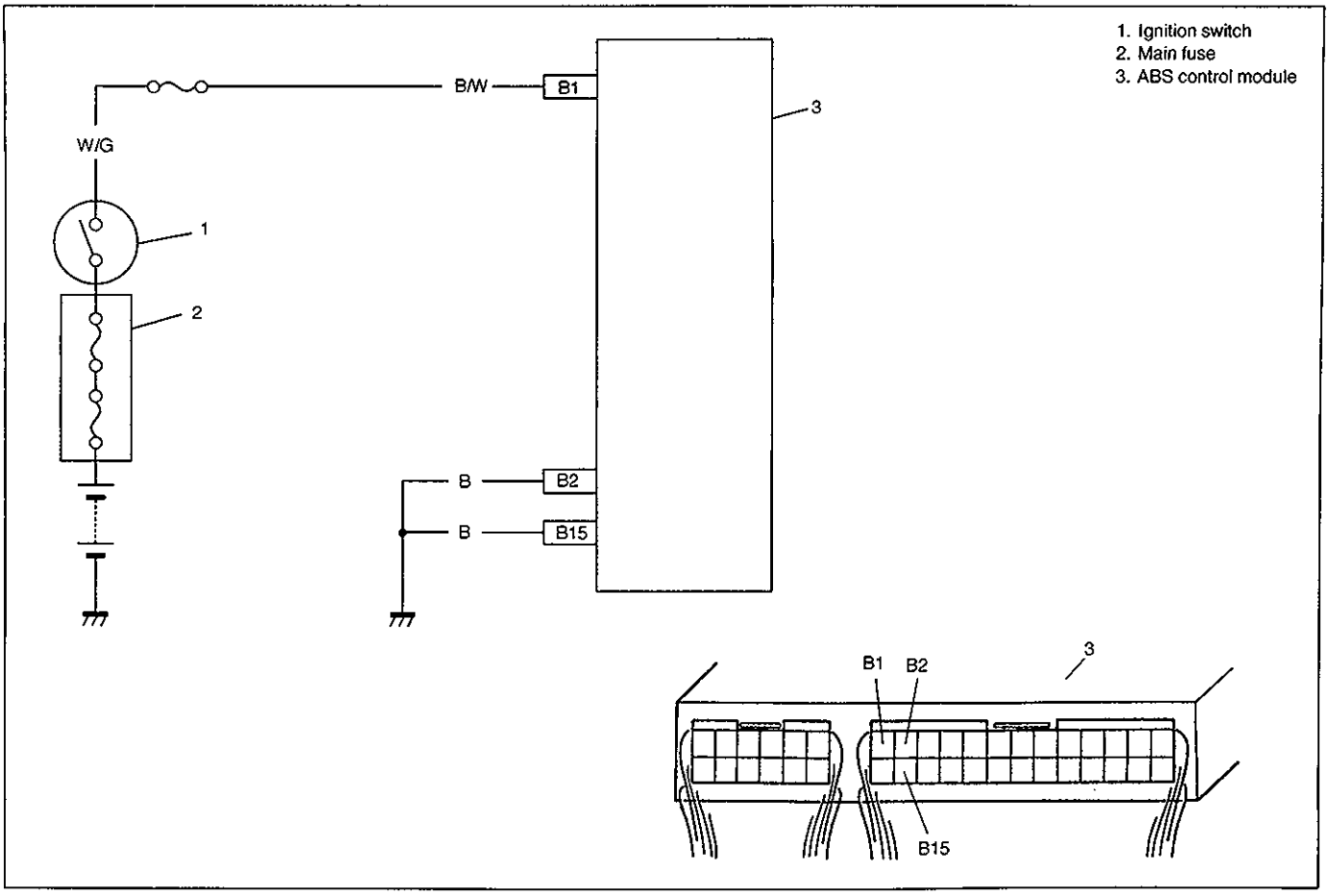

DESCRIPTION

The ABS control module monitors the power source voltage at terminal "B1". When the power source voltage becomes extremely high or low, this DTC will be set. As soon as the voltage rises or lowers to the specified level, the set DTC will be cleared.

INSPECTION

STEP	ACTION	YES	NO
1	1) Connect a voltmeter between battery positive (+) terminal and body ground. 2) Start the engine and measure the maximum voltage when racing the engine. Is it over 16V?	Check charging system referring to SECTION 6H.	Go to Step 2.
2	Keep the engine idling, measure the voltage between terminal "B1" of the ABS control module and body ground (all couplers connected). Is it always under 9V?	• Check charging system referring to SECTION 6H. • Increased resistance of wire "B/W". • Wire "B/W" half short to ground.	• Poor connection of terminal "B1", "B2" or "B15" of the ABS control module. • Increased resistance of wire "B". If all the above are in good condition, substitute a known-good ABS control module and recheck.

BLANK

DTC 61 – ABS PUMP MOTOR CIRCUIT

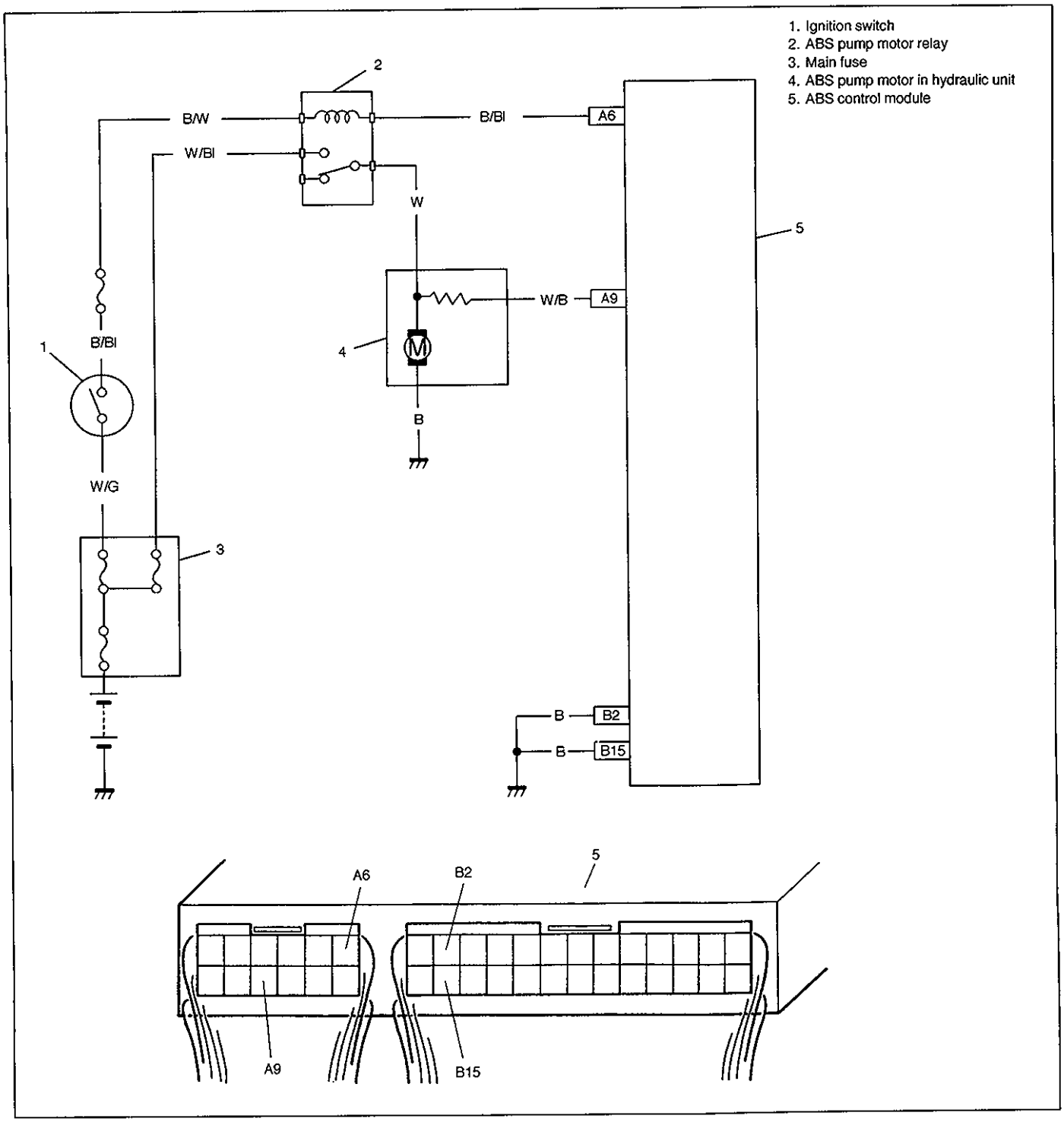

DESCRIPTION

This DTC is set when the voltage at terminal "A9" is extremely low even though the ABS control module sends the "Motor ON" signal to ABS pump motor or when the voltage at terminal "A9" is extremely high even though the ABS control module sends the "Motor OFF" signal to ABS pump motor. Also this DTC is set when the electromotive force (voltage) by pump motor's inertia movement is not input to terminal "A9" right after the ABS control module has sent the "Motor OFF" signal to ABS pump motor.

INSPECTION

STEP	ACTION	YES	NO
1	1) Turn IG switch OFF, then disconnect ABS control module connectors and ABS pump motor coupler. 2) Connect terminals "A6" of ABS control module harness side coupler to ground. 3) Turn IG switch ON, measure voltage between terminal "A9" of ABS motor harness side coupler and ground. Is it about 10-14V?	Go to Step 2.	Go to Step 4.
2	Check ABS pump motor relay referring to "ABS Pump Motor Relay Inspection" in this section. Is it in good condition?	Go to Step 3.	Replace ABS pump motor relay.
3	1) Turn IG switch OFF and disconnect terminal "A6" to ground. 2) Install ABS pump motor relay. 3) Disconnect ABS control module 12 p connector and turn IG switch ON. Does ABS pump motor run then?	"W" circuit shorted to power circuit.	Check for proper connection of ABS pump motor ground. If OK, substitute a known-good ABS control module and recheck.
4	1) Turn IG switch OFF. 2) Check for proper connection to ABS pump motor relay. 3) If OK then check ABS pump motor relay referring to "ABS Pump Motor Relay Inspection" in this section. Is it in good condition?	Go to Step 5.	Replace ABS pump motor relay.
5	1) Check for proper connection to ABS pump motor. 2) If OK then check ABS pump motor referring to "ABS Pump Motor Inspection" in this section. Is it OK?	Go to Step 6.	Replace ABS pump motor.
6	1) Disconnect ABS control module connectors, ABS pump relay and ABS pump motor. 2) Check for proper connection to module at terminal "A6" & "A9". 3) If OK, then check "B/Bl", "W" and "W/B" circuit for open and short to ground. Is it in good condition?	Go to step 7.	"B/Bl", "W" or "W/B" circuit open or shorted to ground.
7	Check "B/W" and "W/Bl" circuit for open. Is it in good condition?	Go to step 8.	"B/W" or "W/Bl" circuit open.
8	1) Connect ABS pump motor coupler. 2) Measure resistance between terminal "A9" of module connector and body ground. Is there continuity?	Substitute a known-good ABS control module and recheck.	Motor "B" circuit open.

DTC 63 – ABS SOLENOID VALVE RELAY CIRCUIT

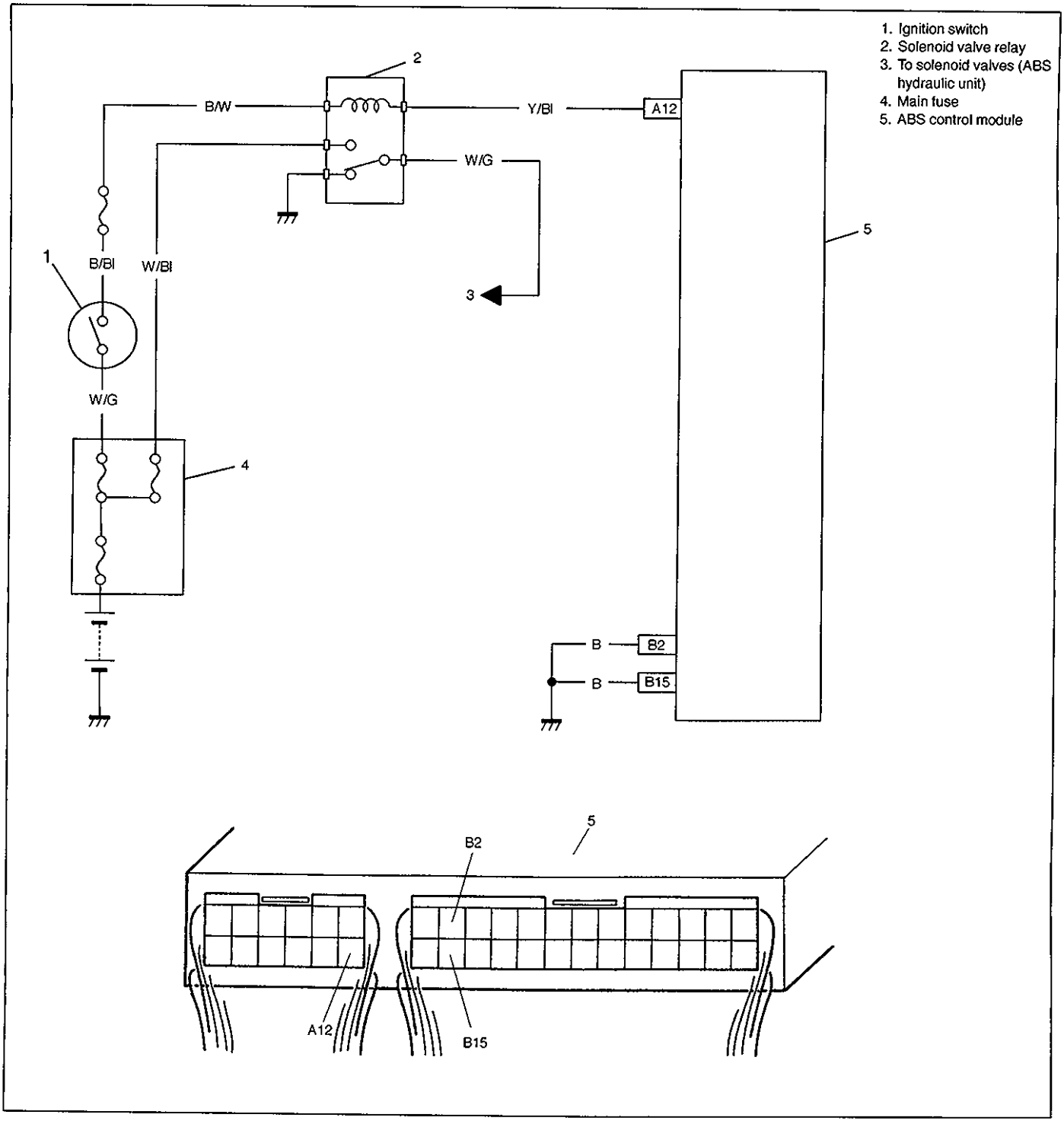

DESCRIPTION

This DTC is set when no electric current flows to the solenoid valve even though "solenoid valve relay ON" signal is fed from the ABS control module or when electric current flows to the solenoid valve even through "solenoid valve relay OFF" signal is fed from the ABS control module.

INSPECTION

STEP	ACTION	YES	NO
1	1) Turn IG switch OFF. 2) Remove ABS solenoid valve relay. 3) Check for proper connection to solenoid valve relay. 4) If OK, then check ABS solenoid valve relay referring to "ABS Solenoid Valve Relay Inspection" in this section. Is it in good condition?	Go to Step 2.	Replace ABS solenoid valve relay.
2	Measure "Y/Bl" circuit for resistance. Is there continuity?	Go to Step 3.	"Y/Bl" circuit open.
3	1) Install solenoid valve relay. 2) Disconnect ABS control module connectors. 3) Check for proper connection to ABS control module at terminals "A1", "A2", "A7", "A8", "A9", "A12", "B12" and "B13". 4) If OK then measure voltage between module connector terminal "A12" and body ground with IG switch ON. Is it 10-14V?	Substitute a known-good ABS control module and recheck.	"B/Bl" circuit open or shorted to ground.

DTC 71 – ABS CONTROL MODULE

DESCRIPTION

This DTC will be set when an internal malfunction is detected in the ABS control module.

INSPECTION

STEP	ACTION	YES	NO
1	Erase all DTCs. Turn ignition SW ON and check for any DTC. Is it DTC71?	Replace ABS control module.	Could be a temporary malfunction of the ABS control module.

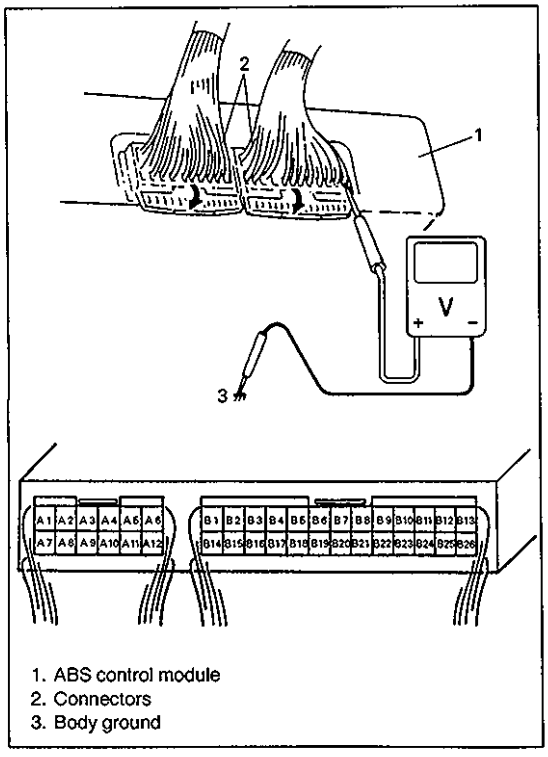

1. ABS control module
2. Connectors
3. Body ground

STANDARD VOLTAGE AT ABS CONTROL MODULE CONNECTOR TERMINALS

Voltage between each terminal of module connector and body ground is as follows.

CAUTION:
Never connect voltmeter or ohmmeter to ABS control module with connector disconnected from it. Attempt to do it may cause damage to ABS control module.

NOTE:
As each terminal voltage is affected by the battery voltage, confirm that it is 11V or more when ignition switch is ON.

TERMINAL	WIRE COLOR	CIRCUIT	STANDARD VOLTAGE	CONDITION
A1	Bl/Y	Release solenoid valve (left-front)	10-14V	When ignition switch ON and hydraulic unit not operating
A2	Bl/W	Hold solenoid valve (left-front)	10-14V	When ignition switch ON and hydraulic unit not operating
A4	G	Wheel speed sensor + (right-front)	below 1V	When ignition switch ON and vehicle stopped
A5	Bl	Wheel speed sensor – (left-front)	below 1V	
A6	B/Bl	ABS pump motor relay	10-14V	When ignition switch ON and hydraulic unit not operating
A7	Gr/Y	Release solenoid valve (rear)	10-14V	When ignition switch ON and hydraulic unit not operating
A8	Gr/W	Hold solenoid valve (rear)	10-14V	When ignition switch ON and hydraulic unit not operating
A9	W/B	Pump motor voltage monitor	below 1V	When ignition switch ON and hydraulic unit not operating
A10	G/B	Wheel speed sensor – (right-front)	below 1V	
A11	Bl/B	Wheel speed sensor + (left-front)	below 1V	When ignition switch ON and vehicle stopped
A12	Y/Bl	Solenoid valve relay	below 2V	When ignition switch ON and hydraulic unit not operating
B1	B/W	Ignition switch	10-14V	
B2	B	Ground 1	below 1V	

TERMINAL	WIRE COLOR	CIRCUIT	STANDARD VOLTAGE	CONDITION
B3	R/Bl	"ABS" warning lamp	below 2V	When ignition switch ON and ABS warning light ON
			10-14V	When ignition switch ON and ABS warning light OFF
B4	Y	Wheel speed sensor + (right-rear)	below 1V	When ignition switch ON and vehicle stopped
B5	Lg/R	Wheel speed sensor – (left-rear)	below 1V	
B6	P/B	Diagnosis switch	9-14V	When ignition switch ON and Diagnosis switch OFF
B9	G/W	Stop lamp switch	10-14V	When brake pedal depressed
			below 1V	When brake pedal released
B10	R/W	G sensor signal	About 2.5V	When ignition switch ON and vehicle stopped
B12	R/W	Hold solenoid valve (right-front)	10-14V	When ignition switch ON and hydraulic unit not operating
B13	R/Y	Release solenoid valve (right-front)	10-14V	When ignition switch ON and hydraulic unit not operating
B15	B	Ground 2	below 1V	
B17	Y/B	Wheel speed sensor – (right-rear)	below 1V	
B18	Lg/B	Wheel speed sensor + (left-rear)	below 1V	When ignition switch ON and vehicle stopped
B19	R/G	Differential switch	7-14V	When ignition switch ON
B21	G	Idle up signal	below 1V	When engine idle up
B23	Or/B	G sensor ground	below 1V	

ON-VEHICLE SERVICE

PRECAUTION

When connectors are connected to ABS control module, do not disconnect connectors of hydraulic unit, sensors, relay, fuse etc. and turn ignition switch ON. Then DTC will be set in ABS control module.

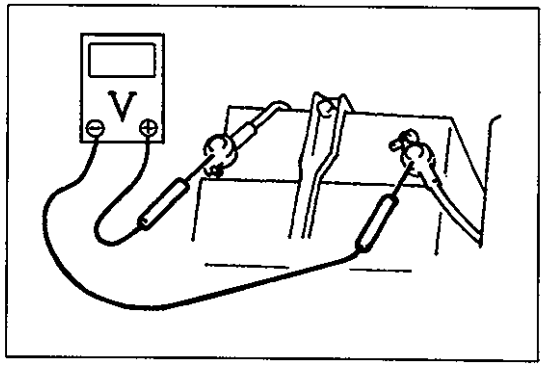

ABS HYDRAULIC UNIT OPERATION CHECK

1) Check that basic brake system other than ABS is in good condition.
2) Check that battery voltage is 11V or higher.
3) With "ABS" warning lamp, check that no abnormality is detected in ABS. Refer to item DIAGNOSTIC TROUBLE CODE(DTC) CHECK.
4) Lift up vehicle.
5) Set transmission to neutral and release parking brake.

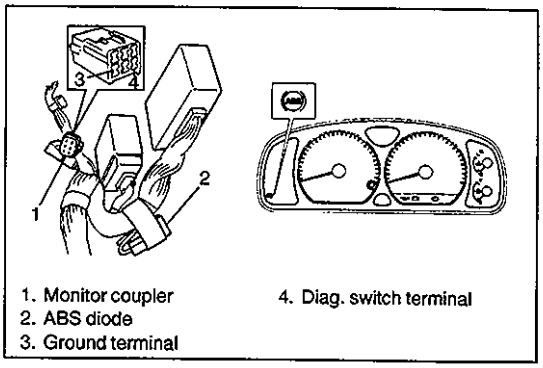

1. Monitor coupler
2. ABS diode
3. Ground terminal
4. Diag. switch terminal

6) Turn each wheel gradually by hand to check if brake dragging occurs. If it does, correct.
7) With diag. switch terminal of monitor coupler connected to ground by using service wire and ABS diode removed, turn ignition switch ON and check if "ABS" warning lamp indicates DTC 12.
   When other DTC's appear on display, refer to "ABS DIAGNOSTIC FLOW TABLE" in this section.
8) Turn ignition switch "OFF".

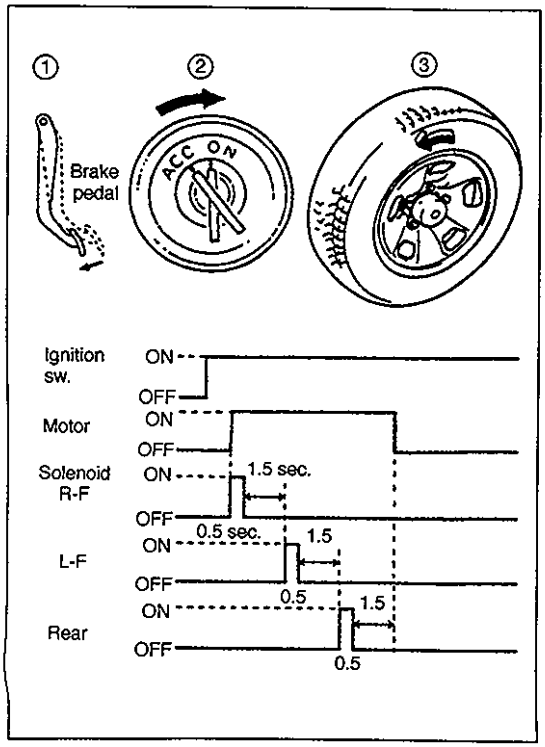

9) Perform following checks with help of another person.
   Brake pedal should be depressed and then ignition switch turned ON by one person and wheel should be turned by another person's hand. At this time, check that:
   - Operation sound of solenoid is heard and wheel turns only about 0.5 sec (Brake force is depressurized).
   - Operation sound of pump motor is heard and pulsation is felt at brake pedal.
10) If all 4-wheels cannot be checked during one ignition cycle (OFF → ON), repeat Step 8) and 9) till all 4 wheels are checked.
    If a faulty condition is found in Steps 9) and 10), replace hydraulic unit.
11) Turn ignition switch "OFF",
12) Remove service wire from monitor coupler and install ABS diode.

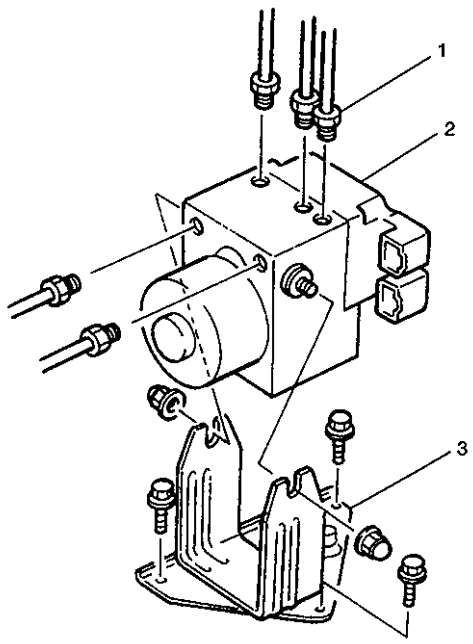

1. Brake pipe
2. ABS hydraulic unit
3. Bracket

ABS HYDRAULIC UNIT

CAUTION:
Never disassemble ABS hydraulic unit, loosen blind plug or remove motor. Performing any of these prohibited services will affect original performance of ABS hydraulic unit.

HYDRAULIC UNIT INSPECTION

Check hydraulic unit for fluid leakage.
If any, repair or replace.

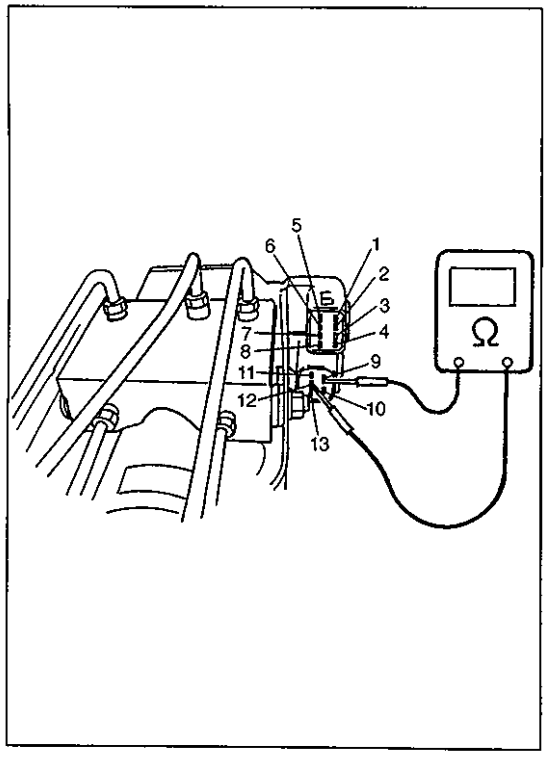

SOLENOID VALVE INSPECTION

1) Turn ignition switch "OFF".
2) Disconnect solenoid connector.
3) Check resistance between terminals and check whether or not short-circuit between each terminal and hydraulic unit body exists.

Between terminals:

1 and 12
3 and 12 — **8.3 – 9.3 Ω at 25°C (77°F)**
4 and 12

5 and 12
7 and 12 — **4.0 – 4.6 Ω at 25°C (77°F)**
8 and 12

9 and 13 — **26 – 40 Ω at 25°C (77°F)**

Between each terminal and unit body: ∞ (infinity)

If faulty condition was found, replace hydraulic unit.

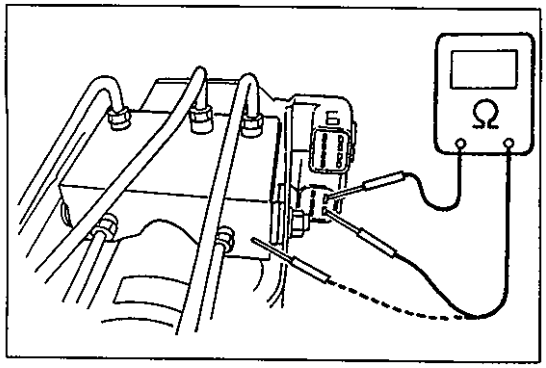

PUMP MOTOR INSPECTION

1) Turn ignition switch "OFF".
2) Disconnect motor connector.
3) Check motor for resistance.

Between motor terminals: Less than 10 Ω at 20°C (68°F)

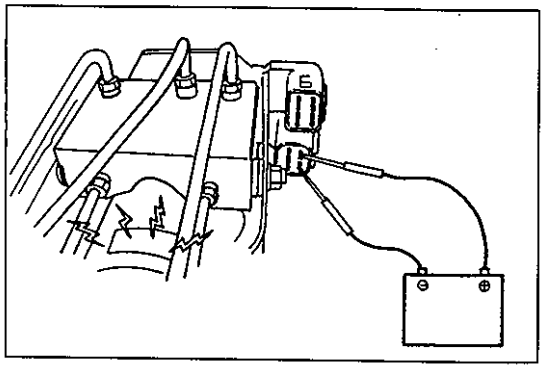

4) Connect 12V battery positive terminal to motor connector terminal "9" and negative terminal to "10".
Then check if operation sound is heard from motor.
If faulty condition was found in Step 3) or 4), replace hydraulic unit.

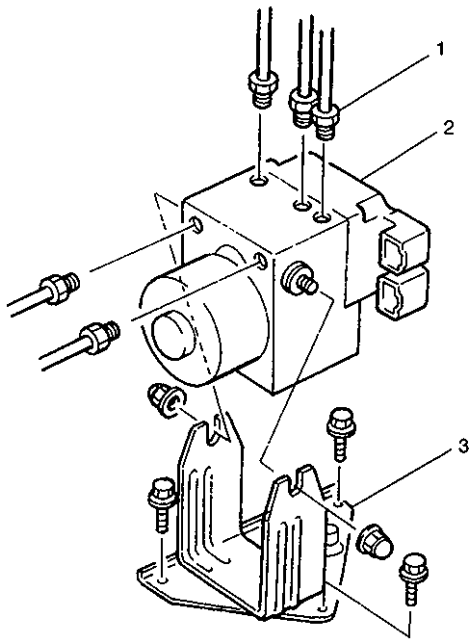

1. Brake pipe
2. ABS hydraulic unit
3. ABS hydraulic unit bracket

REMOVAL

1) Disconnect negative cable from battery.
2) Using special tool, disconnect brake pipes from ABS hydraulic unit.

   Special Tool:
   09950-78210

   NOTE:
   Put bleeder plug cap onto pipe to prevent fluid from spilling. Do not allow brake fluid to get on painted surfaces.
3) Disconnect ABS hydraulic unit connectors.
4) Remove ABS hydraulic unit from bracket.

CAUTION:
- **Do not give an impact to hydraulic unit.**
- **Use care not to allow dust to enter hydraulic unit.**
- **Do not place hydraulic unit on its side or upside down. Handling it in inappropriate way will affect its original performance.**

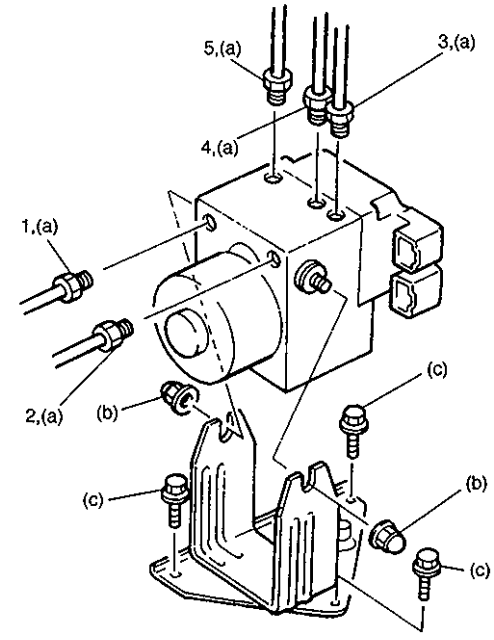

1. From master cylinder
2. From master cylinder
3. To left-front
4. To right-front
5. To rear

INSTALLATION

1) Install hydraulic unit by reversing removal procedure.

   Tightening Torque
   (a): 16 N·m (1.6 kg-m, 11.6 lb-ft)
   (b): 6 N·m (0.6 kg-m, 4.3 lb-ft)
   (c): 10 N·m (1.0 kg-m, 7.2 lb-ft)
2) Bleed air from brake system referring to Section 5.
3) Check each installed part for fluid leakage and perform hydraulic unit operation check.

ABS CONTROL MODULE

CAUTION:
As ABS control module consists of precision parts, be careful not to expose it to excessive shock.

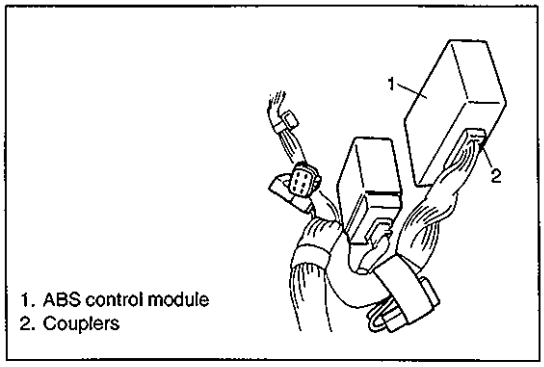

1. ABS control module
2. Couplers

REMOVAL

1) Disconnect negative cable from battery.
2) Disconnect ABS control module couplers.
3) Remove ABS control module.

INSTALLATION

Install it by reversing removal procedure.

FRONT WHEEL SPEED SENSOR

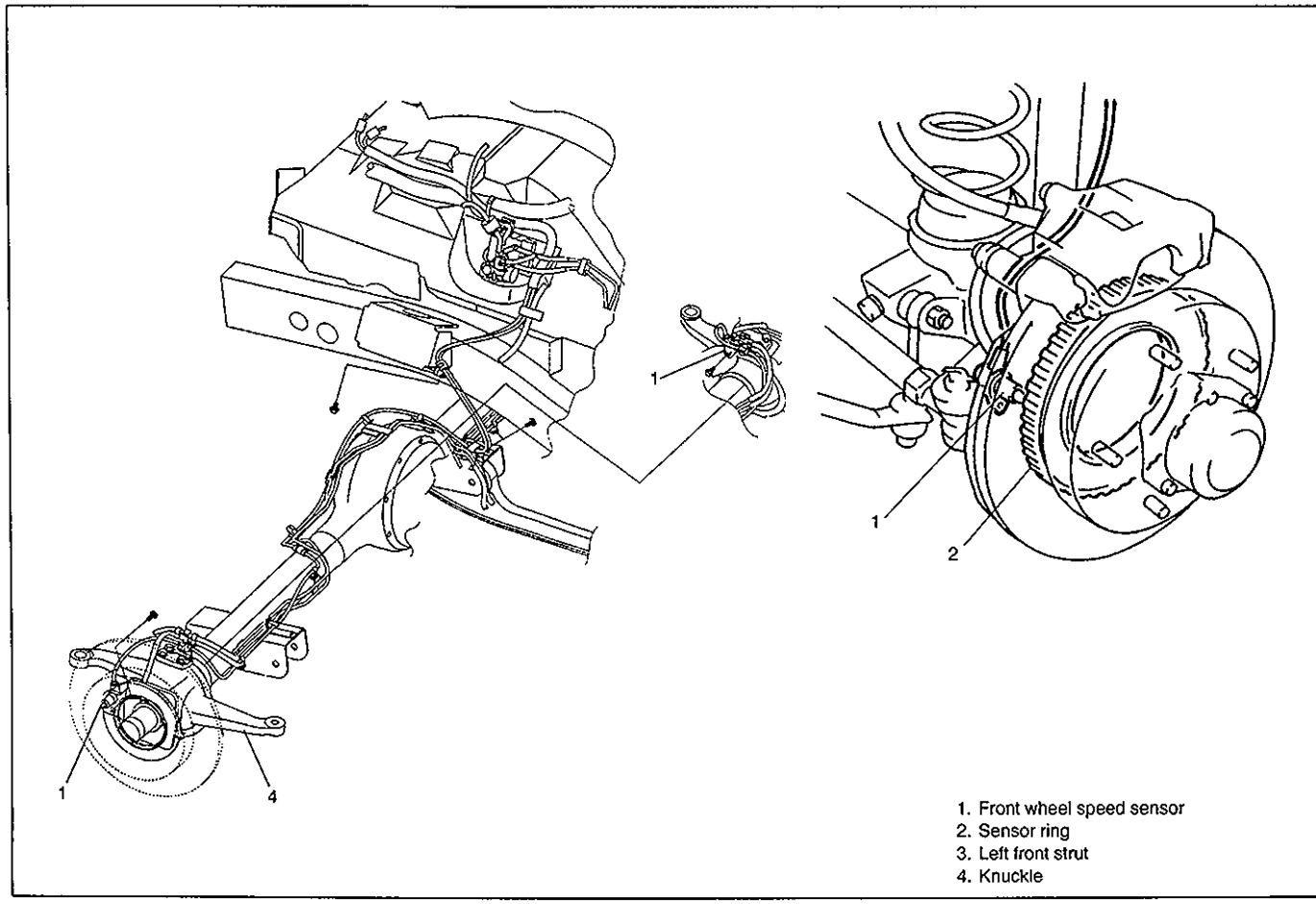

1. Front wheel speed sensor
2. Sensor ring
3. Left front strut
4. Knuckle

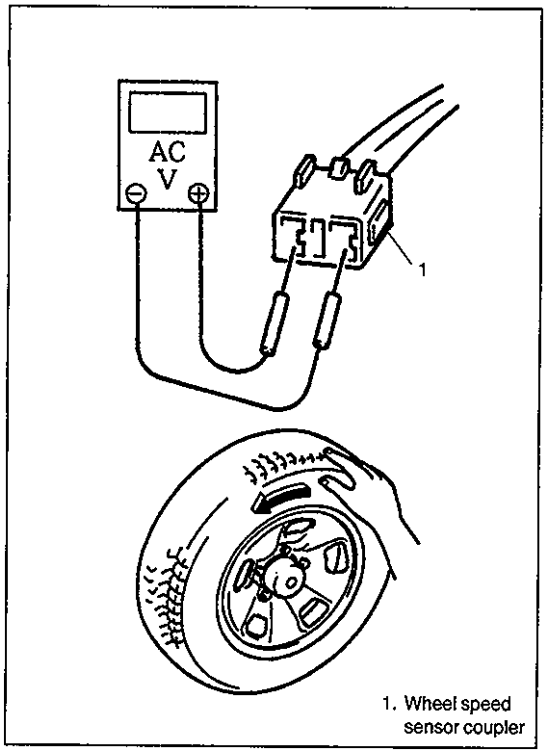

1. Wheel speed sensor coupler

OUTPUT VOLTAGE INSPECTION

1) Turn ignition switch "OFF".
2) Hoist vehicle a little.
3) Disconnect connector of wheel speed sensor.
4) Connect voltmeter between connector terminals.
5) While turning wheel at a speed of approximately 1 full rotation to 1 1/3 rotation per second, check AC voltage of sensor.

Output AC voltage at 1 to 1 1/3 rotation per second (42 – 54 Hz): 120 mV or more

If measured voltage is not as specified, check sensor, rotor and their installation conditions.

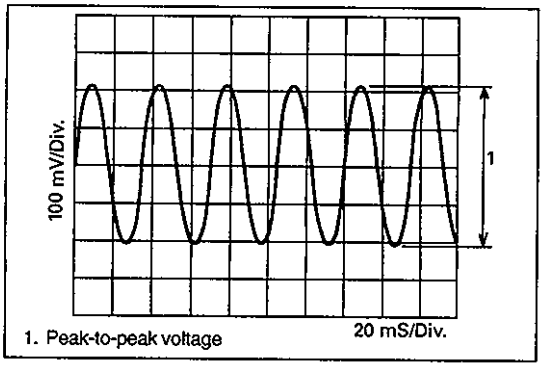

1. Peak-to-peak voltage

Reference

When using oscilloscope for this check, check if peak-to-peak voltage meets specification and waveform is complete.

Peak-to-peak voltage at 1 to 1 1/3 rotation per second (42 – 54 Hz): 340 mV or more

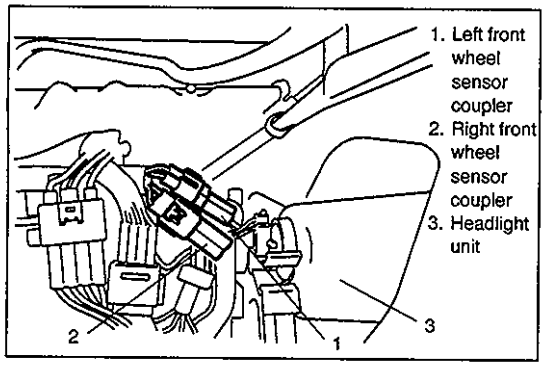

REMOVAL

1) Disconnect negative cable from battery.
2) Disconnect front wheel speed sensor coupler.
3) Hoist vehicle and remove wheel.

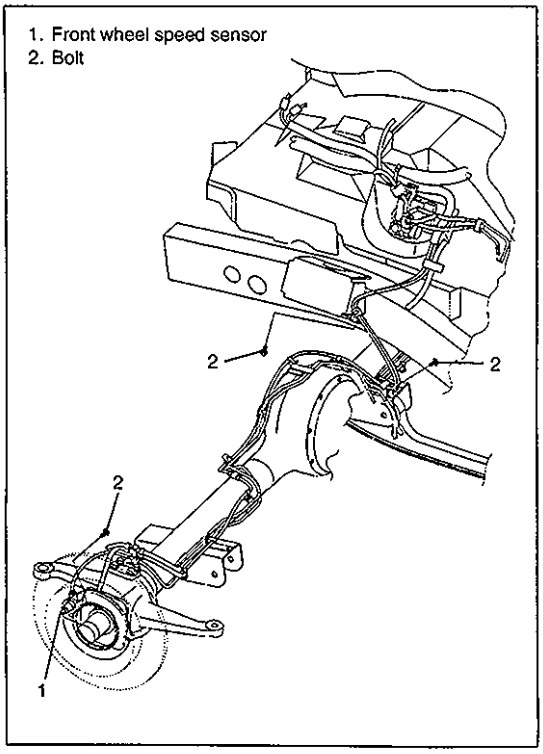

4) Remove harness clamp bolts and front wheel speed sensor from knuckle.

CAUTION:
- **Do not pull wire harness when removing front wheel speed sensor.**
- **Do not cause damage to surface of front wheel speed sensor and do not allow dust, etc. to enter its installation hole.**

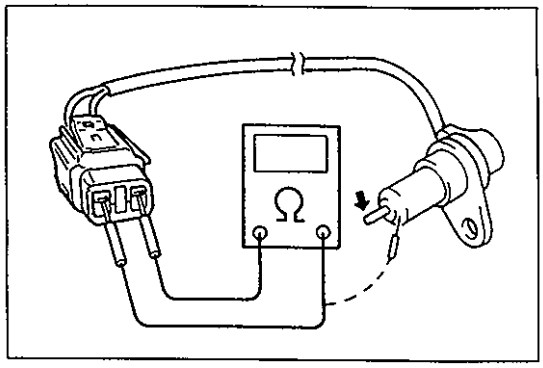

SENSOR INSPECTION
- Check sensor for damage.
- Check sensor for resistance.

Resistance between terminals: 1.2 – 1.6 kΩ at 20°C (68°F)
Resistance between terminal and sensor body: 1 MΩ or more

If any malfunction is found, replace.

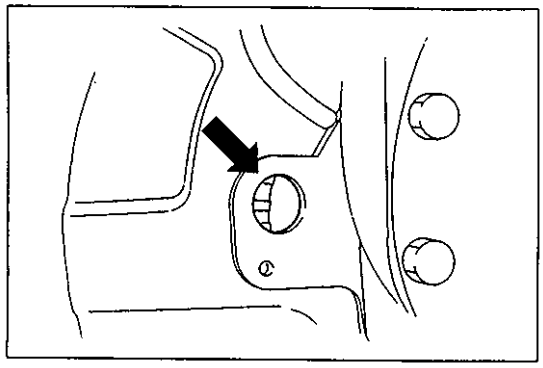

SENSOR ROTOR INSPECTION
- Check rotor serration (teeth) for being missing, damaged or deformed.
- Turn drive shaft and check if rotor rotation is free from eccentricity and looseness.
- Check that no foreign material is attached.
  If any faulty is found,repair or replace.

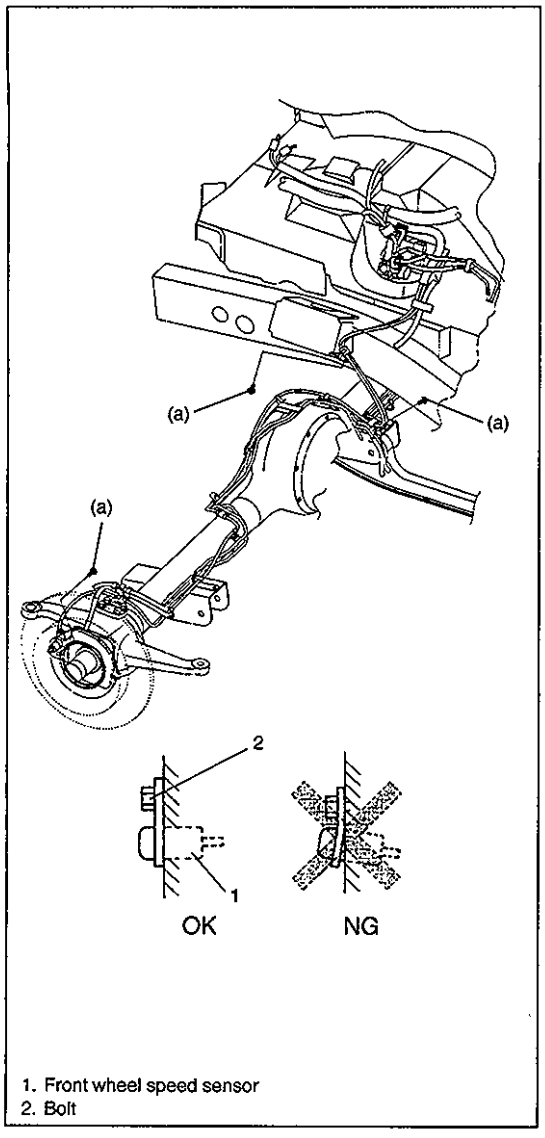

1. Front wheel speed sensor
2. Bolt

INSTALLATION

1) Check that no foreign material is attached to sensor and rotor.
2) Install it by reversing removal procedure.

Tightening Torque
(a): 10 N·m (1.0 kg-m, 7.2 lb-ft)

CAUTION:
Do not pull wire harness or twist more than necessary when installing front wheel speed sensor.

3) Check that there is no clearance between sensor and knuckle.

FRONT WHEEL SENSOR RING

REMOVAL

1) Remove wheel hub with sensor rotor. Refer to SECTION 3D FRONT SUSPENSION of this manual.

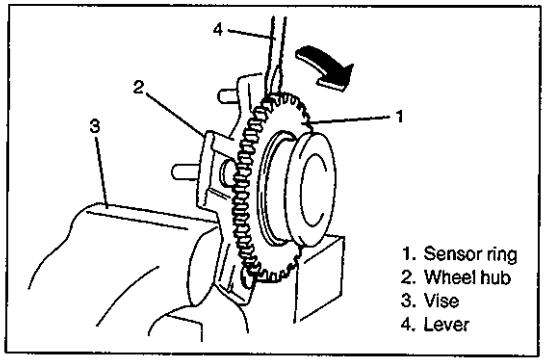

1. Sensor ring
2. Wheel hub
3. Vise
4. Lever

2) Remove sensor ring from wheel hub as shown.

CAUTION:
Pull out sensor ring from wheel hub gradually and evenly. Attempt to pull it out partially may cause it to be deformed.

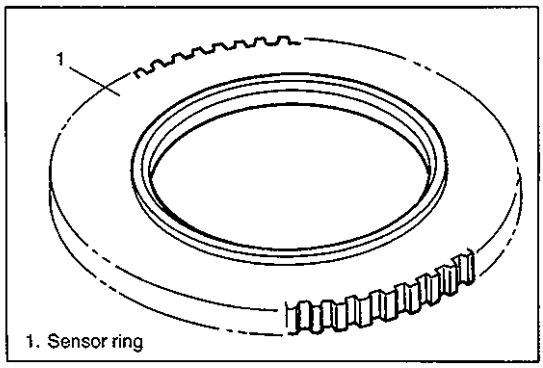

INSPECTION

- Check ring serration (teeth) for being missing, damaged or deformed.
- Check sensor ring for being deformed (warped).
- Check that no foreign material is attached.
  If any malcondition is found, repair or replace.

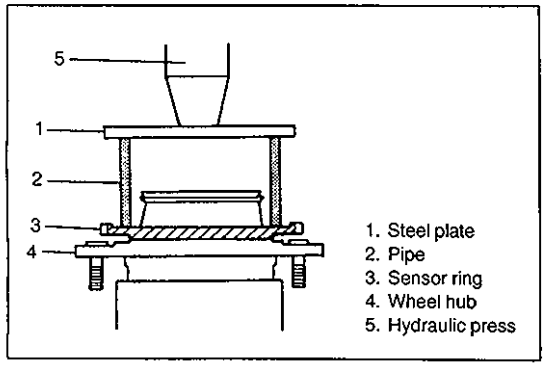

INSTALLATION

1) Install sensor ring as shown.

NOTE:

- **Pipe used hear should have inner diameter of 90 mm (3.55 in) – 96 mm (3.77 in) and its outside should not contact teeth of sensor ring.**
- **Use care not to insert wheel hub diagonally.**

2) Install wheel hub,brake disc, brake caliper, locking hub and wheel.
   Refer to SECTION 3D FRONT SUSPENSION of this manual.

REAR WHEEL SPEED SENSOR

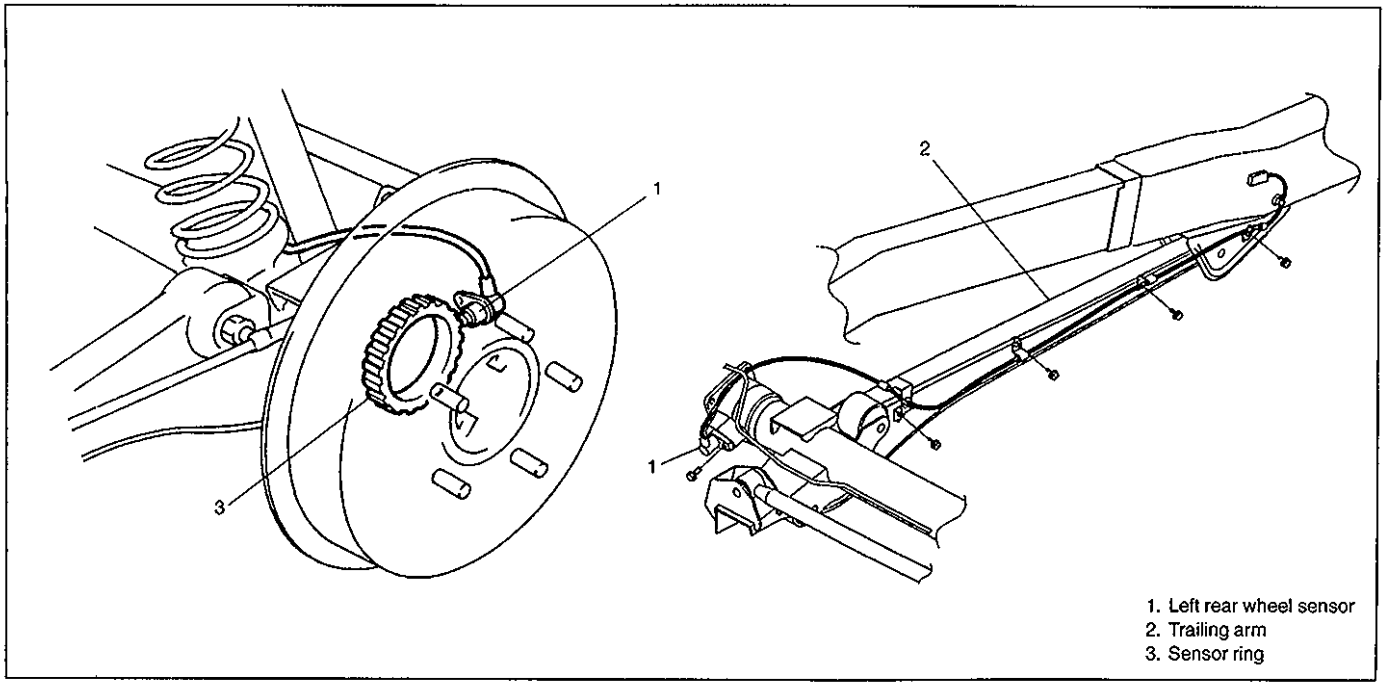

1. Left rear wheel sensor
2. Trailing arm
3. Sensor ring

OUTPUT VOLTAGE INSPECTION

Check in the same procedure as that used of front wheel speed sensor check.

Output AC voltage at 1 to
1 1/3 rotation per second (38 – 49Hz): 100 mV or more
Reference
When using oscilloscope,
peak-to-peak voltage at 1 to
1 1/3 rotation per second (38 – 49 Hz): 280 mV or more

REMOVAL

1) Disconnect negative cable from battery.
2) Hoist vehicle.
3) Disconnect rear wheel speed sensor coupler.
4) Detach ABS wheel sensor wire harness from suspension frame.

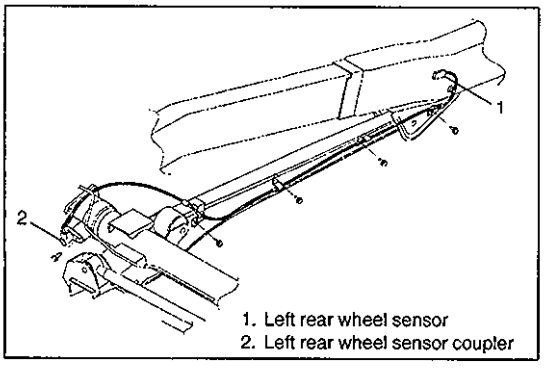

1. Left rear wheel sensor
2. Left rear wheel sensor coupler

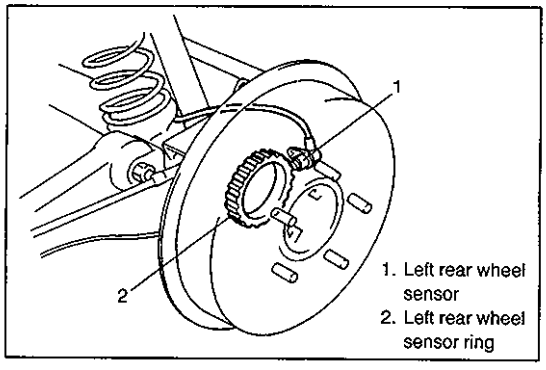

1. Left rear wheel sensor
2. Left rear wheel sensor ring

5) Remove rear wheel speed sensor from rear axle housing.

CAUTION:
- **Do not pull wire harness when removing rear wheel speed sensor.**
- **Do not cause damage to surface of rear wheel speed sensor and do not allow dust, etc. to enter its installation hole.**

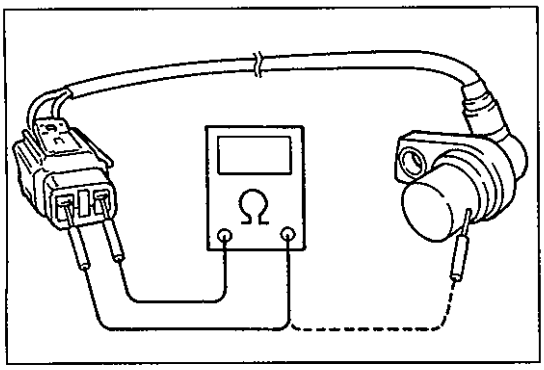

SENSOR INSPECTION

- Check sensor for damage.
- Check sensor for resistance.

Resistance between terminals : 1.4 – 1.8 kΩ at 20°C

Resistance between terminal and sensor body : 1 MΩ or more

If any malcondition is found, replace.

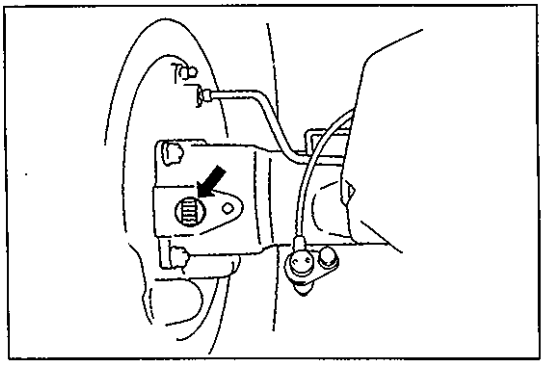

SENSOR ROTOR INSPECTION

- Check rotor serration (teeth) for being missing, damaged or deformed.
- Turn wheel and check if rotor rotation is free from eccentricity and looseness.
- Check that no foreign material is attached.

If any faulty is found, repair or replace.

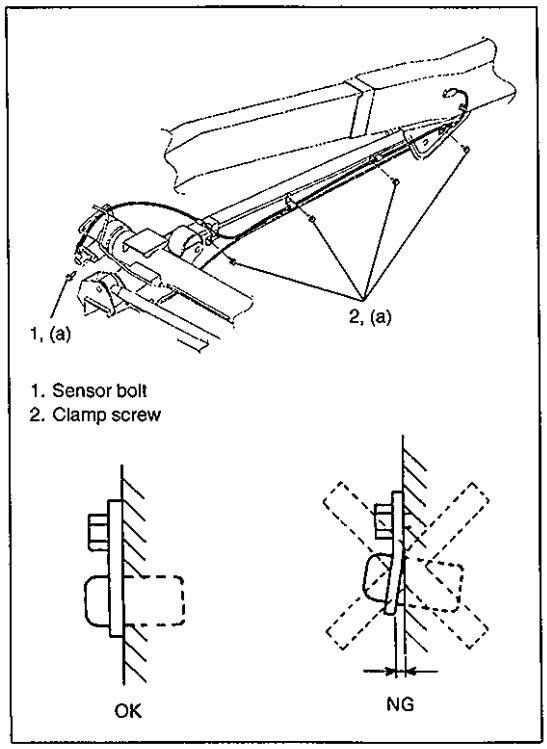

INSTALLATION

1) Check that no foreign material is attached to sensor and ring.
2) Install it by reversing removal procedure.

Tightening Torque
(a): 10 N·m (1.0 kg-m, 7.2 lb-ft)

CAUTION:
Do not pull wire harness or twist more than necessary when installing rear wheel speed sensor.

3) Check that there is no clearance between sensor and rear axle housing.

REAR WHEEL SENSOR RING

REMOVAL

1) Remove rear axle shaft. Refer to SECTION 3E REAR SUSPENSION of this manual.

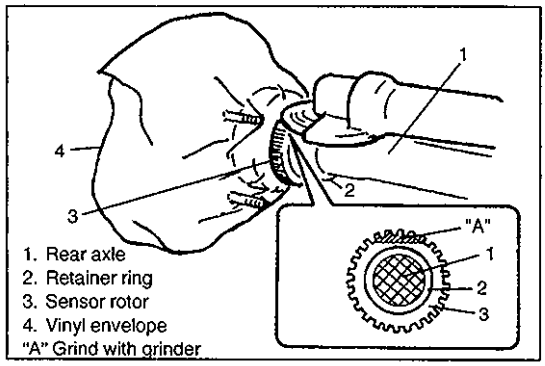

2) In order to remove sensor ring from retainer ring, grind with a grinder one part of the sensor ring as illustrated till it becomes thin.

CAUTION:
- **Cover vinyl sheet or the like over wheel bearing so that fine grains from grinding will not enter there.**
- **Be careful not to go so far as to grind the retainer ring.**

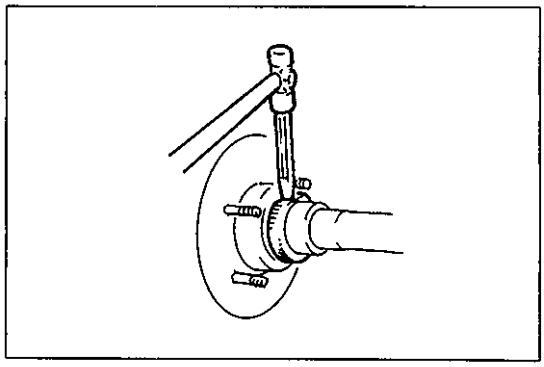

3) Break with a chisel the thin ground sensor ring, and it can be removed.

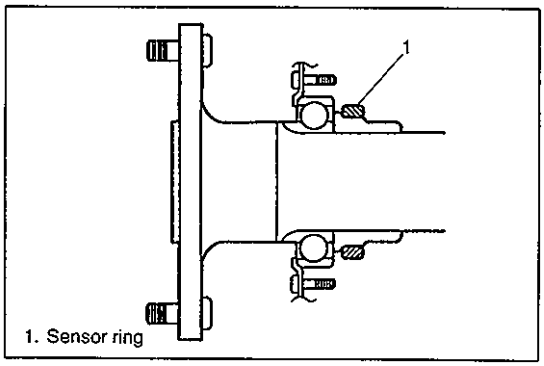

INSTALLATION

1) Press-fit sensor ring as shown.

NOTE:
Use care not to cause any damage to outside of retainer ring.

2) Install rear axle shaft referring to SECTION 3E REAR SUSPENSION of this manual.
3) Install brake drum and wheel.
Refer to SECTION 5 BRAKES of this manual.

ABS SOLENOID VALVE RELAY/ABS PUMP MOTOR RELAY

INSPECTION

1) Disconnect negative cable from battery.
2) Remove solenoid valve relay or pump motor relay from bracket.

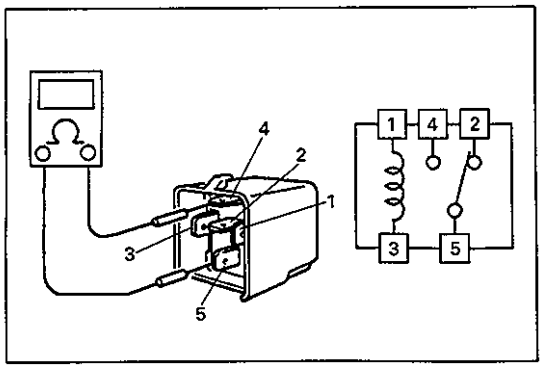

3) Check resistance between each two terminals.

Between "1" and "3" : 70 – 90 Ω at 20°C (68°F)
Between "2" and "5" : Continuity
Between "4" and "5" : No continuity

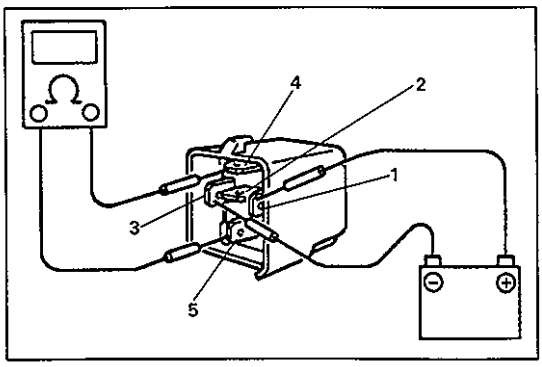

4) Connect battery to terminals "1" and "3" then check continuity from following terminals.

Between "2" and "5" : No continuity
Between "4" and "5" : Continuity

5) If inspection in step 3) and/or 4) fails, replace relay.

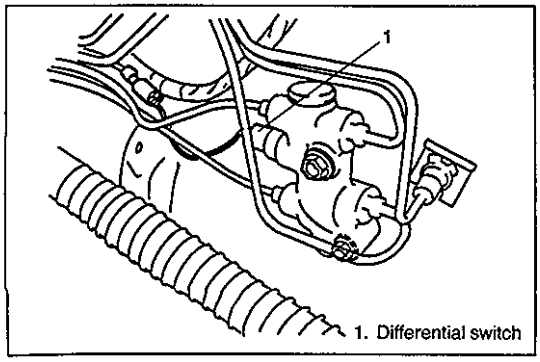

DIFFERENTIAL SWITCH

(included in P/Differential valve ass'y)

For removal, inspection and installation of this switch, refer to SECTION 5 of this manual.

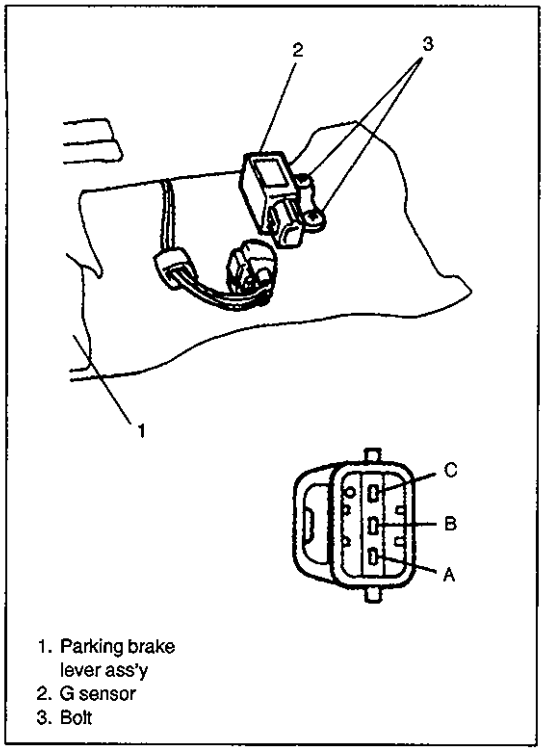

1. Parking brake lever ass'y
2. G sensor
3. Bolt

G SENSOR

REMOVAL

1) Turn ignition switch "OFF" and disconnect battery negative cable.
2) Remove rear center console box.
3) Disconnect connector from sensor.
4) Remove G sensor from floor.

CAUTION:
Sensor must not be dropped or shocked. It will affect its original performance.

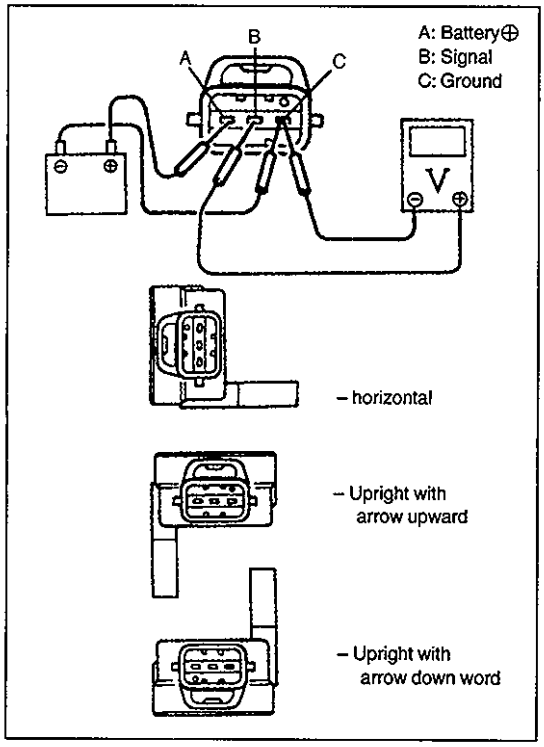

INSPECTION

Connect positive cable of 12 volt battery to "A" terminal of sensor and ground cable to "C" terminal. Then using voltmeter, check voltage between "B" terminal and "C" terminal.

When placed horizontally: 2 – 3V
When placed upright with arrow upward: 3 – 4V
when placed upright with arrow downward: 1 – 2V

If measured voltage is not as specified, replace sensor with bracket.

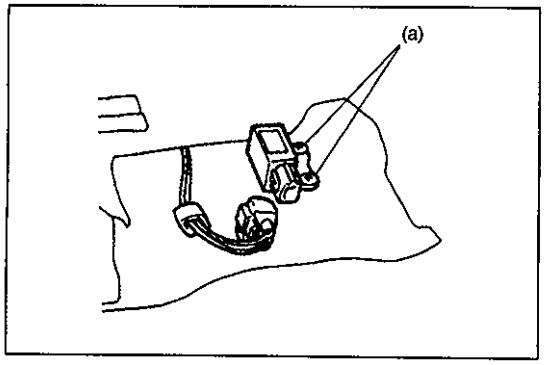

INSTALLATION

1) Connect connector to sensor securely.
2) Install sensor onto floor so that arrow mark directs vehicle forward.

   Tightening Torque
   (a): 23 N·m (2.3 Kg-m, 17.0 lb-ft)

3) Install rear console box.

TIGHTENING TORQUE SPECIFICATIONS

Fastening parts	Tightening Torque		
	N·m	kg-m	lb-ft
Brake pipe flare nut (a)	16	1.6	11.6
ABS hydraulic unit bracket bolt (b)	10	1.0	7.2
ABS hydraulic unit nut (c)	6	0.6	4.3
Front wheel speed sensor bolt (d)	10	1.0	7.2
Front wheel speed sensor harness clamp bolt (e)	10	1.0	7.2
Rear wheel speed sensor bolt (f)	10	1.0	7.2
Rear wheel speed sensor harness clamp bolt (g)	10	1.0	7.2

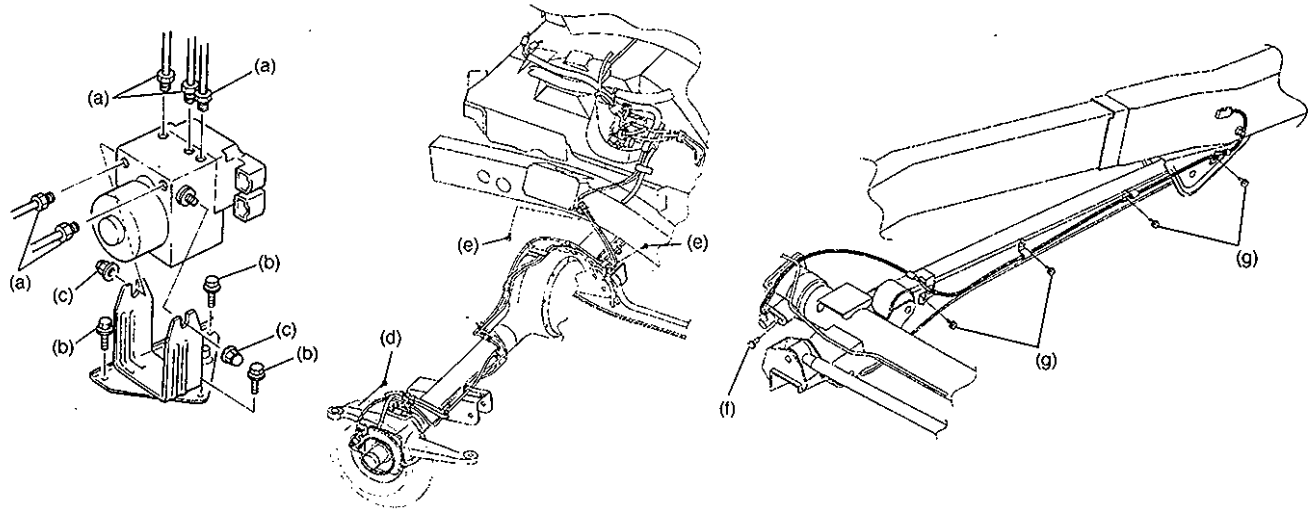

SPECIAL TOOLS

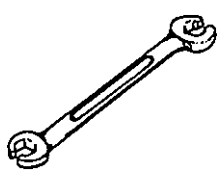

09950-78210
Flare nut wrench
(10 mm)

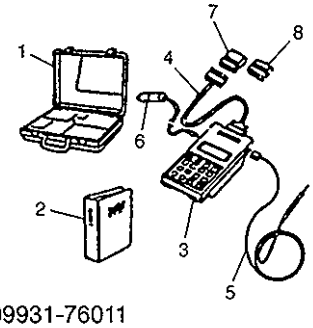

09931-76011
Tech 1A kit

1. Storage case
2. Operator's manual
3. Tech 1A
4. DLC cable
5. Test lead/probe
6. Power source cable
7. DLC cable adaptor
8. Self-test adaptor

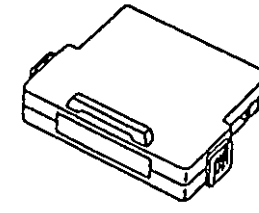

Mass strage cartridge

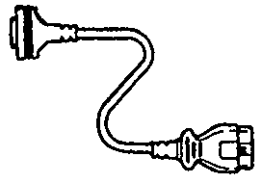

09931-76030
16/14 pin DLC cable

SECTION 6

ENGINE

WARNING:
For vehicles equipped with Supplement Restraint (Air Bag) System

- **Service on and around the air bag system components or wiring must be performed only by an authorized SUZUKI dealer. Refer to "Air Bag System Components and Wiring Location View" under "General Description" in air bag system section in order to confirm whether you are performing service on or near the air bag system components or wiring. Please observe all WARNINGS and "Service Precautions" under "On-Vehicle Service" in air bag system section before performing service on or around the air bag system components or wiring. Failure to follow WARNINGS could result in unintentional activation of the system or could render the system inoperative. Either of these two conditions may result in severe injury.**
- **Technical service work must be started at least 90 seconds after the ignition switch is turned to the "LOCK" position and the negative cable is disconnected from the battery. Otherwise, the system may be activated by reserve energy in the Sensing and Diagnostic Module (SDM).**

6

CONTENTS

GENERAL INFORMATION 6- 1
ENGINE DIAGNOSIS 6- 5
On-Board Diagnostic System 6- 5
Precaution in Diagnosing Troubles 6- 5
Engine Diagnostic Flow Table 6- 6
Engine Diagnosis Table 6-10

GENERAL INFORMATION

STATEMENT ON CLEANLINESS AND CARE

An automobile engine is a combination of many machined, honed, polished and lapped surfaces with tolerances that are measured in the thousands of an millimeter (ten thousands of inch). Accordingly, when any internal engine parts are serviced, care and cleanliness are important. Throughout this section, it should be understood that proper cleaning and protection of machined surfaces and friction areas is part of the repair procedure. This is considered standard shop practice even if not specifically stated.

- A liberal coating of engine oil should be applied to friction areas during assembly to protect and lubricate the surfaces on initial operation.
- Whenever valve train components, pistons, piston rings, connecting rods, rod bearings, and crankshaft journal bearings are removed for service, they should be retained in order. At the time of installation, they should be installed in the same locations and with the same mating surfaces as when removed.
- Battery cables should be disconnected before any major work is performed on the engine. Failure to disconnect cables may result in damage to wire harness or other electrical parts.

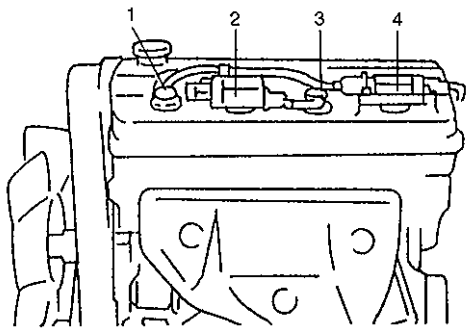

1. No.1 cylinder
2. No.2 cylinder
3. No.3 cylinder
4. No.4 cylinder

- Throughout this manual, the four cylinders of the engine are identified by numbers: No.1, No.2, No.3 and No.4 as counted from crankshaft pulley side to flywheel side.

GENERAL INFORMATION ON ENGINE SERVICE

THE FOLLOWING INFORMATION ON ENGINE SERVICE SHOULD BE NOTED CAREFULLY, AS IT IS IMPORTANT IN PREVENTING DAMAGE, AND IN CONTRIBUTING TO RELIABLE ENGINE PERFORMANCE.

- When raising or supporting engine for any reason, do not use a jack under oil pan. Due to small clearance between oil pan and oil pump strainer, jacking against oil pan may cause it to be bent against strainer resulting in damaged oil pick-up unit.
- It should be kept in mind, while working on engine, that 12-volt electrical system is capable of violent and damaging short circuits.

  When performing any work where electrical terminals could possibly be grounded, ground cable of the battery should be disconnected at battery.
- Any time the air cleaner, air intake hose, throttle body or intake manifold is removed, the intake opening should be covered. This will protect against accidental entrance of foreign material which could follow intake passage into cylinder and cause extensive damage when engine is started.
- When disconnecting couplers, don't pull wire harness but make sure to hold coupler itself. With lock type coupler, be sure to unlock before disconnection. Attempt to disconnect coupler without unlocking may result in damage to coupler. When connecting lock type coupler, insert it till clicking sound is heard and connect it securely.

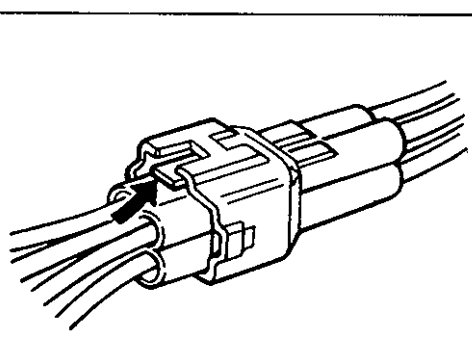

With short pipe, fit hose as far as it reaches pipe joint as shown.

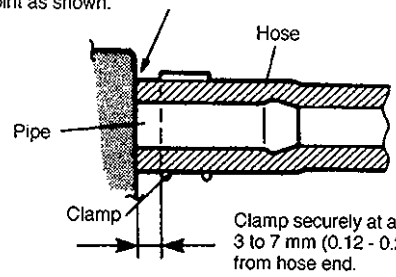

With following type pipe, fit hose as far as its peripheral projection as shown.

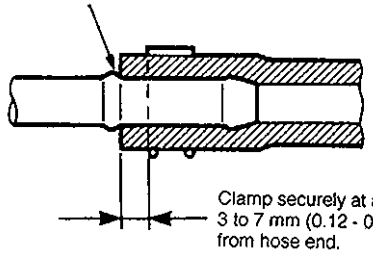

With bent pipe, fit hose as far as its bent part as shown or till pipe is about 20 to 30 mm (0.79 - 1.18 in.) into the hose.

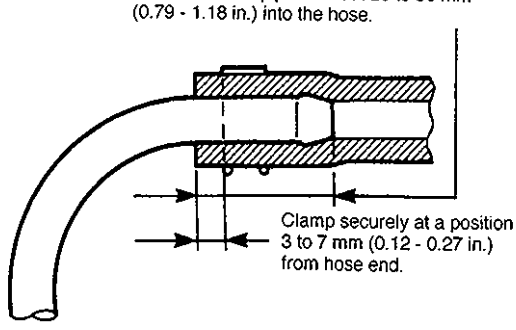

With straight pipe, fit hose till pipe is about 20 to 30 mm (0.79 - 1.18 in.) into the hose.

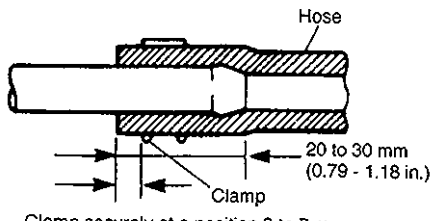

Clamp securely at a position 3 to 7 mm (0.12 - 0.27 in.) from hose end.

PRECAUTION ON FUEL SYSTEM SERVICE

- Work must be done with no smoking, in a well-ventilated area and away from any open flames.
- As fuel feed line (between fuel pump and fuel pressure regulator) is still under high fuel pressure even after engine was stopped, loosening or disconnecting fuel feed line directly may cause dangerous spout of fuel to occur where loosened or disconnected.
  Before loosening or disconnecting fuel feed line, make sure to release fuel pressure according to "FUEL PRESSURE RELIEF PROCEDURE".
  A small amount of fuel may be released after the fuel line is disconnected.
  In order to reduce the chance of personal injury, cover the fitting to be disconnected with a shop cloth. Put that cloth in an approved container when disconnection is completed.
- Never run engine with fuel pump relay disconnected when engine and exhaust system are hot.
- Fuel or fuel vapor hose connection varies with each type of pipe. When reconnecting fuel or fuel vapor hose, be sure to connect and clamp each hose correctly referring to left figure.
  After connecting, make sure that the hose has no twist or kink.
- When installing fuel union bolt gasket, always use new gasket and tighten union bolt to specified torque. See Section 6C for specified torque.
- When installing injector, fuel feed pipe or fuel pressure regulator, lubricate its O-ring with gasoline.
- When connecting fuel pipe flare nut, first tighten flare nut by hand and then tighten it to specified torque.

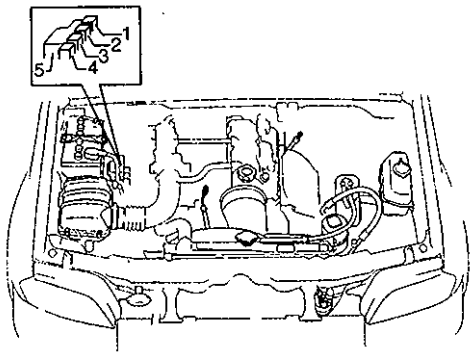

1. Fuel pump relay
2. Main relay
3. A/C condensor fan motor relay
4. A/C compressor relay
5. Main fuse

FUEL PRESSURE RELIEF PROCEDURE

CAUTION:
This work must not be done when engine is hot. If done so, it may cause adverse effect to catalyst.

After making sure that engine is cold, relief fuel pressure as follows.

1) Place transmission gear shift lever in "Neutral" (shift selector lever to "P" range for A/T vehicle), set parking brake, and block drive wheels.
2) Remove fuel pump relay from relay box.
3) Remove fuel filler cap to release fuel vapor pressure in fuel tank and then reinstall it.
4) Start engine and run it till it stops for lack of fuel. Repeat cranking engine 2 – 3 times of about 3 seconds each time to dissipate fuel pressure in lines. Fuel connections are now safe for servicing.
5) Upon completion of servicing, install fuel pump relay to relay box.

FUEL LEAKAGE CHECK PROCEDURE

After performing any service on fuel system, check to make sure that there are no fuel leakages as follows.

1) Turn the ignition switch ON position for 3 seconds (to operate fuel pump) and then turn it OFF position.
   Repeat this (ON and OFF) 3 or 4 times and apply fuel pressure to fuel line (till fuel pressure is felt by hand placed on fuel return hose).

2) In this state, check to see that there are no fuel leakages from any part of fuel system.

ENGINE DIAGNOSIS

This vehicle is equipped with an engine and emission control system, which controls the A/F mixture, ignition timing, emission, etc. suitably to engine conditions by ECM. ECM has an On-Board Diagnostic system which detects a malfunction in this system.
When diagnosing a trouble in the engine including this system, be sure to have understanding of the outline of "On-Board Diagnostic system" and each item in "Precaution in Diagnosing Trouble" and follow "ENGINE DIAGNOSTIC FLOW TABLE" given below to obtain correct result smoothly.

ON-BOARD DIAGNOSTIC SYSTEM

Refer to "On-Board Diagnostic System" in Section 6E.

PRECAUTION IN DIAGNOSING TROUBLES

Be sure to read "Precaution in Diagnosing Troubles" in Section 6E and observe what is written there.

ENGINE DIAGNOSTIC FLOW TABLE

Refer to the following pages for the details of each step.

STEP	ACTION	YES	NO
1	Customer Complaint Analysis 1) Perform customer complaint analysis. Was customer complaint analysis performed?	Go to Step 2.	Perform customer complaint analysis.
2	Diagnostic Trouble Code (DTC) Check, Record and Clearance 1) Check for DTC referring to "DTC Check" in Section 6E. Is there any malfunction DTC(s)?	1) Print DTC or write it down and clear it by referring to "DTC Clearance" in section 6E. 2) Go to Step 3.	Go to Step 4.
3	Visual Inspection 1) Perform visual inspection referring to the "Visual Inspection" in this section. Is there any faulty condition?	1) Repair or replace malfunction part. 2) Go to Step 11.	Go to Step 5.
4	Visual Inspection 1) Perform visual inspection referring to the "Visual Inspection" in this section. Is there any faulty condition?		Go to Step 8.
5	Trouble Symptom Confirmation 1) Confirm trouble symptom referring to the "Trouble-Symptom Confirmation" in this section. Is trouble symptom identified?	Go to Step 6.	Go to Step 7.
6	Rechecking and Record of DTC 1) Recheck for DTC referring to "DTC Check" in Section 6E. Is there any DTC(s)?	Go to Step 9.	Go to Step 8.
7	Rechecking and Record of DTC 1) Recheck for DTC referring to "DTC Check" in Section 6E. Is there any malfunction DTC(s)?		Go to Step 10.
8	Engine Basic Inspection and Engine Diagnosis Table 1) Check and repair according to "Engine Basic Check" and "Engine Diagnosis Table" in this section. Are check and repair complete?	Go to Step 11.	1) Check and repair malfunction part(s). 2) Go to Step 11.
9	Trouble shooting for DTC 1) Check and repair according to applicable DTC diag. flow table in Section 6E. Are check and repair complete?		
10	Check for Intermittent Problems 1) Check for intermittent problems referring to "Check for Intermittent Problem" in this section. Is there any faulty condition?	1) Repair or replace malfunction part(s). 2) Go to Step 11.	Go to Step 11.
11	Final Confirmation Test 1) Clear DTC if any. 2) Perform final confirmation test referring to "Final Confirmation Test" in this section. Is there any problem symptom, malfunction DTC or abnormal condition?	Go to Step 6.	End.

1. CUSTOMER COMPLAINT ANALYSIS

Record details of the problem (failure, complaint) and how it occurred as described by the customer. For this purpose, use of such an inspection form will facilitate collecting information to the point required for proper analysis and diagnosis.

CUSTOMER PROBLEM INSPECTION FORM (EXAMPLE)

User name:	Model:	VIN:	
Date of issue:	Date of Reg.:	Date of problem:	Mileage:

PROBLEM SYMPTOMS	
☐ **Difficult Starting** ☐ No cranking ☐ No initial combustion ☐ No combustion ☐ Poor starting at (☐ cold ☐ warm ☐ always) ☐ Other_____	☐ **Poor Driveability** ☐ Hesitation on acceleration ☐ Back fire/☐ After fire ☐ Lack of power ☐ Surging ☐ Abnormal knocking ☐ Other
☐ **Poor idling** ☐ Poor fast idle ☐ Abnormal idling speed (☐ High ☐ Low) (r/min.) ☐ Unstable ☐ Hunting (r/min. to r/min.) ☐ Other_____	☐ **Engine Stall when** ☐ Immediately after start ☐ Accel. pedal is depressed ☐ Accel. pedal is released ☐ Load is applied ☐ A/C ☐ Electric load ☐ P/S ☐ Other_____ ☐ Other_____
☐ OTHERS:	

VEHICLE/ENVIRONMENTAL CONDITION WHEN PROBLEM OCCURS	
Environmental Condition	
Weather Temperature Frequency Road	☐ Fair ☐ Cloudy ☐ Rain ☐ Snow ☐ Always ☐ Other_____ ☐ Hot ☐ Warm ☐ Cool ☐ Cold (°F/ °C) ☐ Always ☐ Always ☐ Sometimes (times/ day, month) ☐ Only once ☐ Under certain condition ☐ Urban ☐ Suburb ☐ Highway ☐ Mountainous (☐ Uphill ☐ Downhill) ☐ Tarmacadam ☐ Gravel ☐ Other_____
Vehicle Condition	
Engine Condition	☐ Cold ☐ Warming up phase ☐ Warmed up ☐ Always ☐ Other at starting ☐ Immediately after start ☐ Racing without load ☐ Engine speed (r/min)
Vehicle condition	☐ During driving: ☐ Constant speed ☐ Accelerating ☐ Decelerating ☐ Right hand corner ☐ left hand corner ☐ When shifting (Lever position) ☐ At stop ☐ Vehicle speed when problem occurs (km/h, Mile/h) ☐ Other_____

Malfunction indicator lamp condition	☐ Always ON ☐ Sometimes ON ☐ Always OFF ☐ Good condition	
Diagnostic trouble code	First check:	☐ No code ☐ Normal code ☐ Malfunction code ( )
	Second check:	☐ No code ☐ Normal code ☐ Malfunction code ( )

NOTE:

The above form is a standard sample. It should be modified according to conditions characteristic of each market.

2. DIAGNOSTIC TROUBLE CODE (DTC) CHECK, RECORD AND CLEARANCE

First, check DTC referring to "DTC Check" in Section 6E. If DTC is indicated, print it or write it down and then clear it by referring to "DTC Clearance" in Section 6E. DTC indicates malfunction that occurred in the system but does not indicate whether it exists now or it occurred in the past and the normal condition has been restored now. To check which case applies, check the symptom in question according to Step 5 and recheck DTC according to Step 6 or 7.

Attempt to diagnose a trouble based on DTC in this step only or failure to clear the DTC in this step will lead to incorrect diagnosis, trouble diagnosis of a normal circuit or difficulty in troubleshooting.

3. and 4. VISUAL INSPECTION

Be sure to perform visual check of the following items that support proper function of the engine.

INSPECTION ITEM	REFERRING SECTION
• Engine oil – – – – – level, leakage	Section 0B
• Engine coolant – – – – – level, leakage	Section 0B
• Fuel – – – – – level, leakage	Section 0B
• A/T fluid – – – – – level, leakage	Section 0B
• Air cleaner element – – – – – dirt, clogging	Section 0B
• Battery – – – – – fluid level, corrosion of terminal	
• Water pump belt and/or cooling fan belt – – – – – tension, damage	Section 0B
• Throttle cable – – – – – play, installation	Section 6E
• A/T throttle cable – – – – – play, installation	
• Vacuum hoses of air intake system – – – – – disconnection, looseness, deterioration, bend	
• Connectors of electric wire harness – – – – – disconnection, friction	
• Fuses – – – – – burning	Section 8
• Parts – – – – – installation, bolt – – – – – looseness	
• Parts – – – – – deformation	
• Other parts that can be checked visually	
Also check following items at engine start, if possible	
• Malfunction indicator lamp ("CHECK ENGINE" lamp)	Section 6E
• Charge warning lamp	Section 6H
• Engine oil pressure warning lamp — Operation	Section 8
• Engine coolant temp. meter	Section 8
• Fuel lever meter	Section 8
• Abnormal air being inhaled from air intake system	
• Exhaust system – – – – – leakage of exhaust gas, noise	
• Other parts that can be checked visually	

5. TROUBLE SYMPTOM CONFIRMATION

Based on information obtained in Step 1 customer complaint analysis and Step 2 DTC check, confirm trouble symptoms. Also, reconfirm DTC according to "DTC Confirmation Procedure" in Section 6E.

6. and 7. RECHECKING AND RECORD OF DTC

Refer to "DTC Check" in section 6E for checking procedure.

8. ENGINE BASIC INSPECTION AND ENGINE DIAGNOSIS TABLE

Perform basic engine check according to the "Engine Basic Inspection Flow Table" first. When the end of the flow table has been reached, check the parts of the system suspected as a possible cause referring to ENGINE DIAGNOSIS TABLE and based on symptoms appearing on the vehicle (symptoms obtained through steps of customer complaint analysis, trouble symptom confirmation and/or basic engine check) and repair or replace faulty parts, if any.

ENGINE BASIC INSPECTION FLOW TABLE

STEP	ACTION	YES	NO
1	Was "ENGINE DIAG. FLOW TABLE" performed?	Go to Step 2.	Go to "ENGINE DIAG. FLOW TABLE".
2	Check battery voltage. Is it 11 V or more?	Go to Step 3.	Charge or replace battery.
3	Is engine cranked?	Go to Step 4.	Go to "DIAGNOSIS" in section 6G.
4	Does engine start?	Go to Step 5.	Go to Step 7.
5	Check engine idle speed/IAC duty referring to "Idle Speed/IAC Duty Inspection" in section 6E. Is check result as specified?	Go to Step 6.	Go to "ENGINE DIAGNOSIS TABLE" in this section.
6	Check ignition timing referring to "Ignition Timing Inspection" in section 6F. Is check result as specified?	Go to "ENGINE DIAGNOSIS TABLE" in this section.	Adjust ignition timing.
7	Check fuel supply as follows: 1) Check to make sure that enough fuel is filled in fuel tank. 2) Turn the ignition switch ON position for 3 seconds and then turn it OFF position. Repeat this a few times. Is fuel return pressure (returning sounds) felt from fuel return hose when the ignition switch is turned ON position?	Go to Step 9.	Go to Step 8.
8	Check fuel pump for operating. 1) Was fuel pump operating sound heard from fuel filler for about 3 seconds after turning the ignition switch ON position and stop?	Go to "Diag. Flow Table B-3" in section 6E.	Go to "Diag. Flow Table B-1" in section 6E.
9	Check ignition spark referring to "Ignition Spark Test" in section 6F. Is it in good condition?	Go to Step 10.	Go to "DIAGNOSIS" in section 6F.
10	Check fuel injector referring to "Fuel Injector Inspection" in section 6E. Is it in good condition?	Go to "ENGINE DIAGNOSIS TABLE" in this section.	Go to "Diag. Flow Table B-2 in section 6E.

9. TROUBLESHOOTING FOR DTC

Based on the DTC indicated in Step 6 or 7 and referring to the applicable DTC diag. flow table in Section 6E, locate the cause of the trouble, namely in a sensor, switch, wire harness, connector, actuator, ECM or other part and repair or replace faulty parts.

10. CHECK FOR INTERMITTENT PROBLEM

Check parts where an intermittent trouble is easy to occur (e.g., wire harness, connector, etc.), referring to "INTERMITTENT AND POOR CONNECTION" in Section 0A and related circuit of DTC recorded in step 2.

11. FINAL CONFIRMATION TEST

Confirm that the problem symptom has gone and the engine is free from any abnormal conditions. If what has been repaired is related to the DTC, clear the DTC once, perform DTC confirmation procedure and confirm that no malfunction DTC (a normal code) is indicated.

ENGINE DIAGNOSIS TABLE

Condition	Possible Cause	Reference Item
Hard starting (Engine cranks OK)	**Engine and emission control system out of order.**	
	• Faulty CMP sensing rotor	CMP sensing rotor inspection in section 6E.
	• Faulty idle air control system	Diag. Flow Table B-4 in Section 6E.
	• Faulty ECT sensor or MAP sensor	ECT sensor or MAP sensor in Section 6E.
	• Faulty ECM	Inspection of ECM and its circuit in Section 6E.
	Low compression.	Compression check in Section 6A.
	• Compression leak from valve seat	Valves inspection in Section 6A.
	• Sticky valve stem	Valves inspection in Section 6A.
	• Weak or damaged valve springs	Valves spring inspection in Section 6A.
	• Compression leak at cylinder head gasket	Cylinder head inspection in Section 6A.
	• Sticking or damaged piston ring	Piston ring inspection in Section 6A.
	• Worn piston, ring or cylinder	Cylinders, pistons and piston rings inspection in Section 6A.
	Others	
	• Malfunctioning PCV valve	PCV system inspection in Section 6E.

Condition	Possible Cause	Reference Item
Engine has no power	**Engine overheating.**	Refer to "Overheating" Section.
	Ignition system out of order.	
	• Defective spark plug	Spark plugs in Section 6F.
	• Faulty ignition coil with ignitor	Ignition coil in Section 6F.
	Fuel system out of order.	
	• Fuel pressure out of specification	Diag. Flow Table B-3 in Section 6E.
	– Dirty fuel filter	
	– Dirty or clogged fuel hose or pipe	
	– Malfunctioning fuel pressure regulator	
	– Malfunctioning fuel pump	
	Engine and emission control system out of order.	
	• Faulty EGR system (if equipped)	Diag. Flow Table B-6 in Section 6E.
	• Faulty injector	Fuel injector in Section 6E.
	• Faulty TP sensor, ECT sensor or MAP sensor	TP sensor, ECT sensor or MAP sensor in Section 6E.
	• Faulty ECM	Inspection of ECM and its circuit in Section 6E.
	Low compression.	Previously outlined.
	Others	
	• Dragging brakes	Diagnosis in Section 5.
	• Slipping clutch	Diagnosis in Section 7C.
Improper engine idling or engine fails to idle	**Ignition system out of order.**	
	• Faulty spark plug	Spark plugs in Section 6F.
	• Faulty ignition coil with ignitor	Ignition coil in Section 6F.
	Fuel system out of order.	
	• Fuel pressure out of specification	Diag. Flow Table B-3 in Section 6E.
	– Malfunctioning fuel pressure regulator	
	Engine overheating.	Refer to "Overheating" Section.
	Engine and emission control system out of order.	
	• Faulty idle air control system	Diag. Flow Table B-4 in Section 6E.
	• Faulty evaporative emission control system	Diag. Flow Table B-5 in Section 6E.
	• Faulty EGR system (if equipped)	Diag. Flow Table B-6 in Section 6E.
	• Faulty injector	Fuel injector in Section 6E.
	• Faulty ECT sensor, TP sensor or MAP sensor	ECT sensor, TP sensor or MAP sensor in Section 6E.
	• Faulty ECM	Inspection of ECM and its circuit in Section 6E.
	Low compression	Previously outlined.
	Others	
	• Malfunctioning PCV valve	PCV system inspection in Section 6E.

Condition	Possible Cause	Reference Item
Engine hesitates (Momentary lack of response as the accelerator is depressed. Can occur at all vehicle speeds. Usually most severe when first trying to make the vehicle move, as from a stop sign.)	**Ignition system out of order.**	
	• Spark plug faulty or plug gap as out of adjustment	Spark plugs in Section 6F.
	Fuel system out of order.	
	• Fuel pressure out of specification	Diag. Flow Table B-3 in Section 6E.
	– Clogged fuel filter	
	– Faulty fuel pressure regulator	
	• Clogged fuel filter, hose or pipe	Fuel pressure check in Section 6E.
	Engine overheating	Refer to "Overheating" Section.
	Engine and emission control system out of order.	
	• Faulty EGR system (if equipped)	Diag. Flow Table B-6 in Section 6E.
	• Faulty injector	Fuel injector in Section 6E.
	• Faulty TP sensor, ECT sensor or MAP sensor	TP sensor, ECT sensor or MAP sensor in Section 6E.
	• Faulty ECM .	Inspection of ECM and its circuit in Section 6E.
	Low compression	Previously outlined.
Surges (Engine power variation under steady throttle or cruise. Feels like the vehicle speeds up and down with no change in the accelerator pedal.)	**Ignition system out of order.**	
	• Defective spark plug (excess carbon deposits, improper gap, and burned electrodes, etc.)	Spark plugs in Section 6F.
	Fuel system out of order.	
	• Variable fuel pressure	Diag. Flow Table B-3 in Section 6E.
	– Clogged fuel filter	
	– Kinky or damaged fuel hose and line	
	– Faulty fuel pressure regulator	
	Engine and emission control system out of order.	
	• Faulty EGR system (if equipped)	Diag. Flow Table B-6 in Section 6E.
	• Faulty MAP sensor	MAP sensor in Section 6E.
	• Faulty injector	Fuel injector in Section 6E.
	• Faulty ECM	Inspection of ECM and its circuit in Section 6E.

Condition	Possible Cause	Reference Item
Excessive detonation (The engine makes sharp metallic knocks that change with throttle opening. Sounds like pop corn popping.)	**Engine overheating**	Refer to "Overheating" Section.
	Ignition system out of order.	
	• Faulty spark plug	Spark plugs in Section 6F.
	• Improper ignition timing	Ignition timing in Section 6F.
	Fuel system out of order.	
	• Clogged fuel filter and fuel lines	Fuel pressure check in Section 6E.
	Engine and emission control system out of order.	
	• Faulty EGR system (if equipped)	Diag. Flow Table B-6 in Section 6E.
	• Faulty ECT sensor or MAP sensor	ECT sensor or MAP sensor in Section 6E.
	• Faulty injector	Fuel injector in Section 6E.
	• Faulty ECM	Inspection of ECM and its circuit in Section 6E.
	Others	
	• Excessive combustion chamber deposits	Piston and cylinder head cleaning in Section 6A.
Overheating	• Inoperative thermostat	Thermostat in Section 6B.
	• Poor water pump performance	Water pump in Section 6B.
	• Clogged or leaky radiator	Radiator in Section 6B.
	• Improper engine oil grade	Engine oil and oil filter change in Section 0B.
	• Clogged oil filter or oil strainer	Oil pressure check in Section 6A.
	• Poor oil pump performance	Oil pressure check in Section 6A.
	• Dragging brakes	Diagnosis in Section 5.
	• Slipping clutch	Diagnosis in Section 7C.
	• Blown cylinder head gasket	Cylinder head inspection in Section 6A.
Poor gasoline mileage	**Ignition system out of order.**	
	• Faulty spark plug (improper gap, heavy deposits, and burned electrodes, etc..)	Spark plugs in Section 6F.
	Engine and emission control system out of order.	
	• Fuel pressure out of specification	Diag. Flow Table B-3 in Section 6E.
	• Faulty TP sensor, ECT sensor or MAP sensor	TP sensor, ECT sensor or MAP sensor in Section 6E.
	• Faulty EGR system (if equipped)	Diag. Flow Table B-6 in Section 6E.
	• Faulty injector	Fuel injector in Section 6E.
	• Faulty ECM	Inspection of ECM and its circuit in Section 6E.
	Low compression	Previously outlined.
	Others	
	• Poor valve seating	Valves inspection in Section 6A.
	• Dragging brakes	Diagnosis in Section 5.
	• Slipping clutch	Diagnosis in Section 7C.
	• Thermostat out of order	Thermostat in Section 6B.
	• Improper tire pressure	

Condition	Possible Cause	Reference Item
Excessive engine oil consumption	**Oil entering combustion chamber**	
	• Sticky piston ring	Piston cleaning in Section 6A.
	• Worn piston and cylinder	Cylinders, pistons and piston rings inspection in Section 6A.
	• Worn piston ring groove and ring	Pistons and piston rings inspection in Section 6A.
	• Improper location of piston ring gap	Pistons installation in Section 6A.
	• Worn or damaged valve stem seal	Valves and cylinder head in Section 6A.
	• Worn valve stem	Valves inspection in Section 6A.
Low oil pressure	• Improper oil viscosity	Engine oil and oil filter change in Section 0B.
	• Malfunctioning oil pressure switch	Oil pressure switch inspection in Section 8.
	• Clogged oil strainer	Oil pan and oil pump strainer cleaning in Section 6A.
	• Functional deterioration of oil pump	Oil pump in Section 6A.
	• Worn oil pump relief valve	Oil pump in Section 6A.
	• Excessive clearance in various sliding parts	
Engine noise Note: Before checking the mechanical noise, make sure that: • Ignition timing is properly adjusted. • Specified spark plug is used. • Specified fuel is used.	**Valve noise**	
	• Improper valve lash	Valve lash in Section 6A.
	• Worn valve stem and guide	Valves inspection in Section 6A.
	• Weak or broken valve spring	Valve springs inspection in Section 6A.
	• Warped or bent valve	Valves inspection in Section 6A.
	• Loose camshaft housing bolts	Camshafts in Section 6A.
	Piston, ring and cylinder noise	
	• Worn piston, ring and cylinder bore	Pistons and cylinders inspection in Section 6A.
	Connecting rod noise	
	• Worn crankpin bearing	Crankpin and connecting rod bearing inspection in Section 6A.
	• Worn crankpin	Crankpin and connecting rod bearing inspection in Section 6A.
	• Loose connecting rod nuts	Connecting rod installation in Section 6A.
	• Low oil pressure	Previously outlined.
	Crankshaft noise	
	• Low oil pressure	Previously outlined.
	• Worn crankshaft journal bearing	Crankshaft and bearing inspection in Section 6A.
	• Worn crankshaft journal	Crankshaft and bearing inspection in Section 6A.
	• Loose lower crankcase (bearing cap) bolts	Crankshaft installation in Section 6A.
	• Excessive crankshaft thrust play	Crankshaft inspection in Section 6A.

Condition	Possible Cause	Referring Item
Excessive hydrocarbon (HC) emission or Excessive carbon monoxide (CO) emission	**Ignition system out of order** • Defective spark plug	
	Fuel system out of order • Fuel pressure out of specification	Fuel pressure check in Section 6E.
	Engine and Emission control system out of order. • Lead contamination of three way catalytic converter (if equipped)	Check for absence of filler neck restrictor.
	• Malfunctioning PCV valve	PCV valve in Section 6E.
	• Faulty EVAP control system	EVAP control system check in Section 6E.
	• Closed loop system (A/F feed back compensation) fails (vehicle with HO2S) – Faulty TP sensor – Faulty ECT sensor or MAP sensor – Faulty HO2S	Check oxygen sensor output voltage referring to DTC No.13 Diag. Flow Table in Section 6E.
	• Maladjusted CO adjusting resistor (vehicle without HO2S)	Idle mixture adjustment in Section 6E.
	• Faulty injector	Fuel injector in Section 6E.
	• Faulty ECM	Inspection of ECM and its circuit in Section 6E.
	Low compression	Previously outlined.
Excessive nitrogen oxides (NOx) emission	**Fuel system out of order** • Fuel pressure out of specification	Fuel pressure check in Section 6E.
	Engine and emission control system • Lead contamination of three way catalytic converter (if equipped)	Check for absence of filler neck restrictor.
	• Faulty EGR system (if equipped)	Diag. Flow Table B-6 in Section 6E.
	• Closed loop system (A/F feed back compensation) fails (vehicle with HO2S) – Faulty TP sensor – Faulty ECT sensor or MAP sensor – Faulty HO2S	Check oxygen sensor output voltage referring to DTC No.13 Diag. Flow Table in Section 6E.
	• Faulty injector	Fuel injector Section 6E.
	• Faulty ECM	Inspection of ECM and its circuit in Section 6E.

SECTION 6A

ENGINE MECHANICAL

WARNING:
For vehicles equipped with Supplemental Restraint (Air Bag) System:

- **Service on and around the air bag system components or wiring must be performed only by an authorized SUZUKI dealer. Refer to "Air Bag System Components and Wiring Location View" under "General Description" in air bag system section in order to confirm whether you are performing service on or near the air bag system components or wiring. Please observe all WARNINGS and "Service Precautions" under "On-Vehicle Service" in air bag system section before performing service on or around the air bag system components or wiring. Failure to follow WARNINGS could result in unintentional activation of the system or could render the system inoperative. Either of these two conditions may result in severe injury.**
- **Technical service work must be started at least 90 seconds after the ignition switch is turned to the "LOCK" position and the negative cable is disconnected from the battery. Otherwise, the system may be activated by reserve energy in the Sensing and Diagnostic Module (SDM).**

CONTENTS

GENERAL DESCRIPTION 6A- 2

ON-VEHICLE SERVICE 6A- 4
- Compression Check 6A- 4
- Engine Vacuum Check 6A- 5
- Oil Pressure Check 6A- 6
- Valve Lash (Clearance) 6A- 8
- Air Cleaner Element 6A- 9
- Cylinder Head Cover 6A-10
- Throttle Body and Intake Manifold 6A-11
- Exhaust Manifold 6A-13
- Timing Belt and Belt Tensioner 6A-14
- Oil Pan and Oil Pump Strainer 6A-19
- Oil Pump 6A-22
- Rocker Arms, Rocker Arm Shaft and Camshaft 6A-26
- Valves and Cylinder Head 6A-34
- Piston, Piston Rings, Connecting Rods and Cylinders 6A-47

UNIT REPAIR OVERHAUL 6A-57
- Engine Assembly 6A-57
- Main Bearings, Crankshaft and Cylinder Block 6A-62

TIGHTENING TORQUE SPECIFICATIONS 6A-74

SPECIAL TOOLS 6A-75

REQUIRED SERVICE MATERIALS 6A-76

NOTE:
For what each abbreviation stands for (i.e., full term), refer to SECTION 0A.

GENERAL DESCRIPTION

ENGINE

The engine is a water-cooled, in line 4 cylinders, 4 stroke cycle gasoline unit equipped with its S.O.H.C. (Single Overhead Camshaft) valve mechanism arranged for "V"-type valve configuration and 16 valves (IN 2 and EX 2/one cylinder).

The single overhead camshaft is mounted over the cylinder head: it is driven from crankshaft through timing belt and opens and closes its valves via the rocker arms.

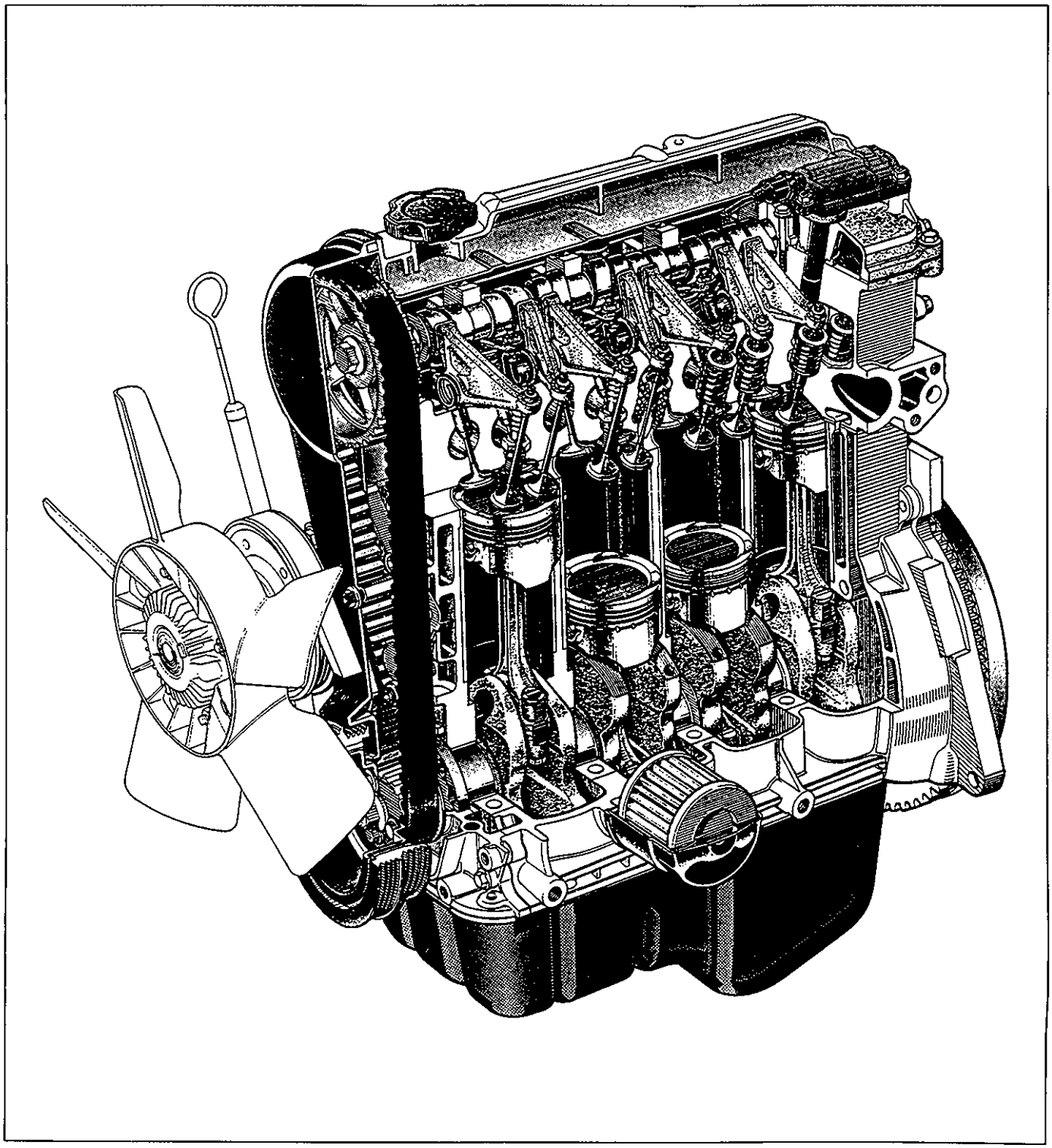

ENGINE LUBRICATION

The oil pump is of a trochoid type, and mounted on crankshaft at crankshaft pulley side.
Oil is drawn up through oil pump strainer and passed through pump to oil filter.
The filtered oil flows into two paths in cylinder block.
In one path, oil reaches crankshaft journal bearings.
Oil from crankshaft journal bearings is supplied to connecting rod bearings by means of intersecting passages drilled in crankshaft, and then injected from a small hole provided on big end of connecting rod to lubricate piston, rings, and cylinder wall.

In another path, oil goes up to cylinder head and lubricates camshaft journals, rocker arms, camshaft, etc., passing through oil gallery in rocker arm shaft.

An oil relief valve is provided on oil pump. This valve starts relieving oil pressure when the pressure comes over about 400 kPa (4.0 kg/cm^2, 56.9 psi). Relieved oil drains back to oil pan.

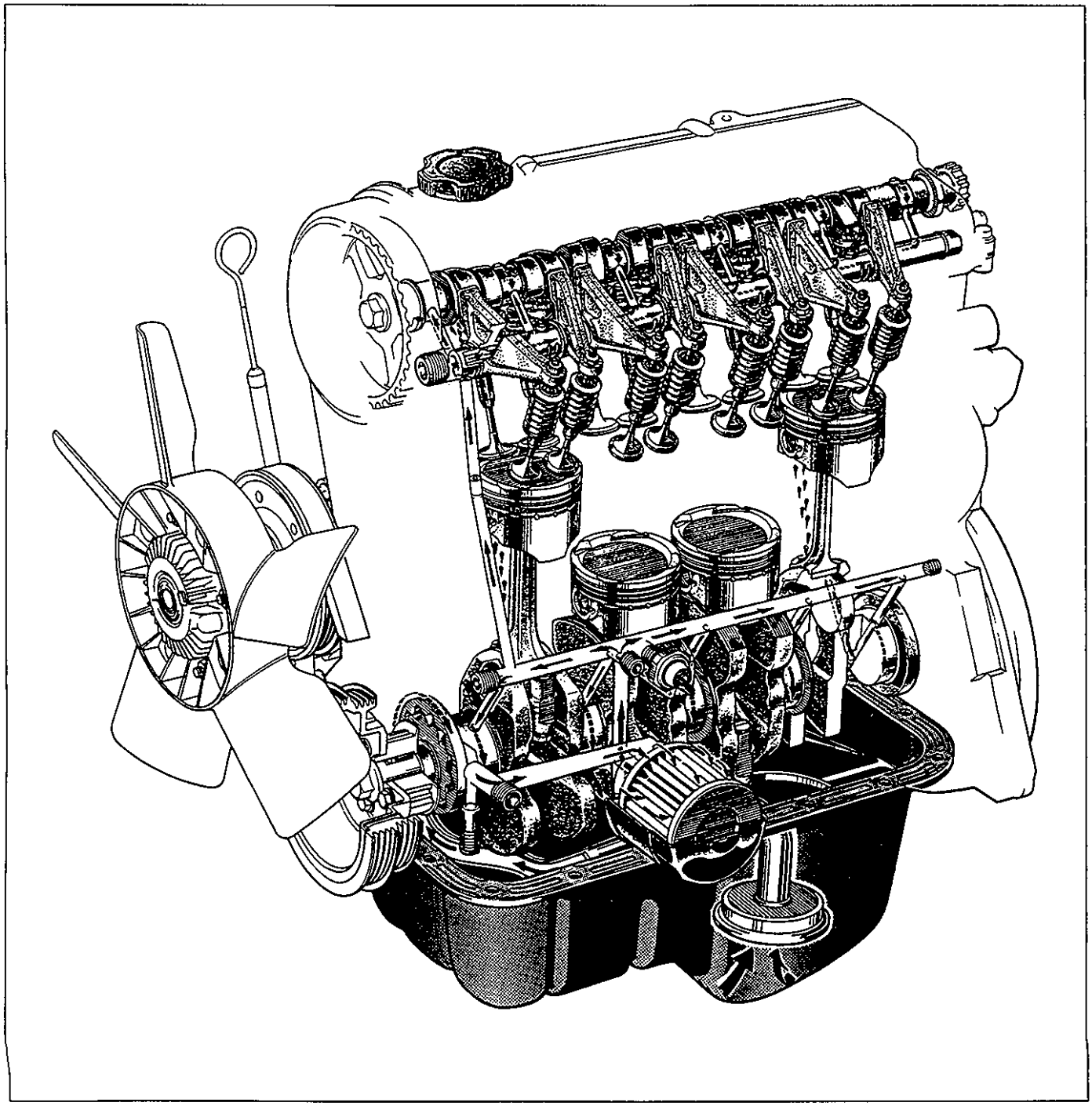

ON-VEHICLE SERVICE

COMPRESSION CHECK

Check compression pressure on all four cylinders as follows:

1) Warm up engine.
2) Stop engine after warming up.

NOTE:
After warming up engine, place transmission gear shift lever in "Neutral" (shift selector lever to "P" range for A/T model), and set parking brake and block drive wheels.

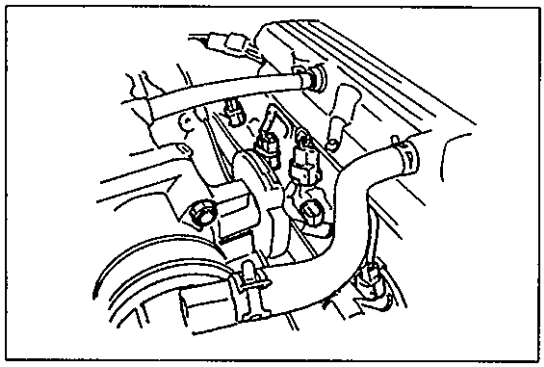

3) Disconnect fuel injector wire harness connector.

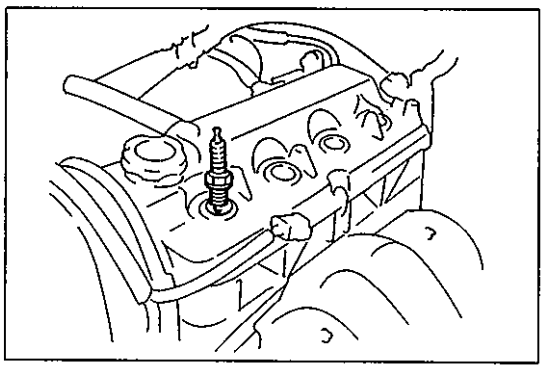

4) Remove ignition coil assemblies and all spark plugs referring to section 6F.

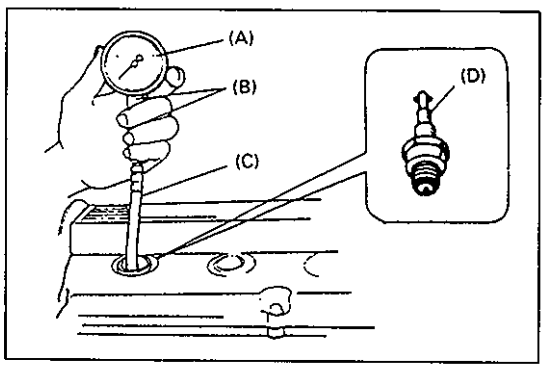

5) Install special tool (Compression gauge) into spark plug hole.

Special Tool
(A): 09915-64510-001
(B): 09915-64510-002
(C): 09915-64530
(D): 09915-67010

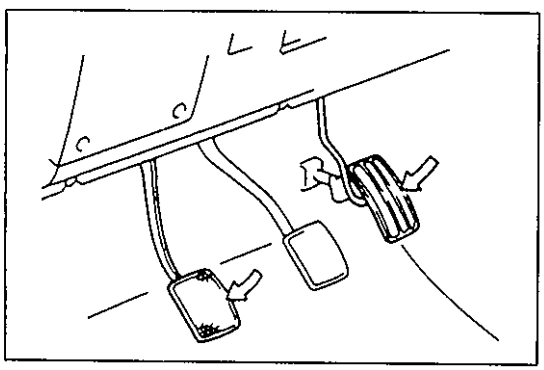

6) Disengage clutch (to lighten starting load on engine) for M/T model, and depress accelerator pedal all the way to make throttle valve full-open.

7) Crank engine with fully charged battery, and read the highest pressure on compression gauge.

NOTE:
For measuring compression pressure, crank engine at least 250 r/min. by using fully charged battery.

	Compression pressure
Standard	1400 kPa (14.0 kg/cm^2, 199.0 psi)
Limit	1200 kPa (12.0 kg/cm^2, 170.0 psi)
Max. difference between any two cylinders	100 kPa (1.0 kg/cm^2, 14.2 psi)

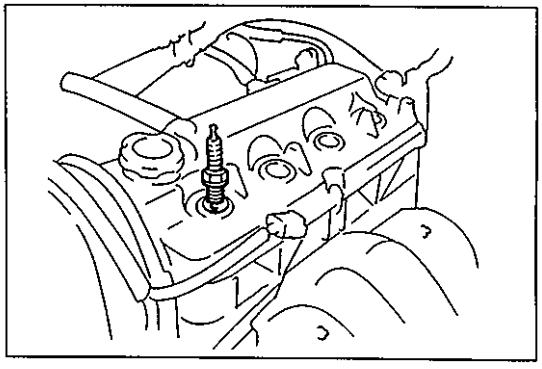

8) Carry out steps 5) through 7) on each cylinder to obtain four readings.
9) After checking, install spark plugs and ignition coil assemblies and connect injector wire harness connector securely.

ENGINE VACUUM CHECK

The engine vacuum that develops in the intake line is a good indicator of the condition of the engine. The vacuum checking procedure is as follows:

1) Warm up engine to normal operating temperature.

NOTE:
After warming up engine, place transmission gear shift lever in "Neutral" (shift selector lever to "P" range for A/T model), and set parking brake and block drive wheels.

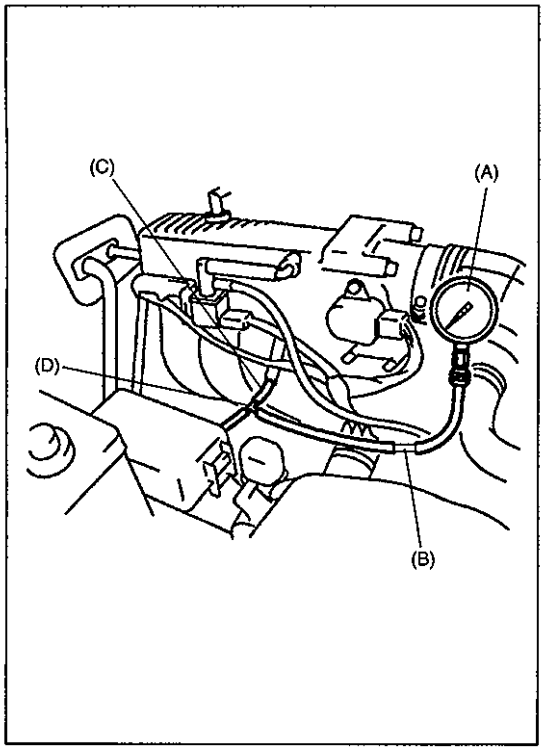

2) With engine stopped, disconnect fuel pressure regulator vacuum hose from intake manifold and connect 3-way joint, hoses and special tool (vacuum gauge and joint) between intake manifold and vacuum hose disconnected.

Special Tool
(A): 09915-67310
(B): 09918-08210

SUZUKI GENUINE PARTS
(C): Hose 09343-03087
(D): 3-way joint 09367-04002

3) Run engine at specified idle speed, and read vacuum gauge. Vacuum should be within following specification.

Vacuum specification (at sea level):
58.7 – 74.7 kPa (44 – 56 cmHg, 17.3 – 22.0 in.Hg) at specified idling speed

4) After checking, connect vacuum hose to intake manifold.

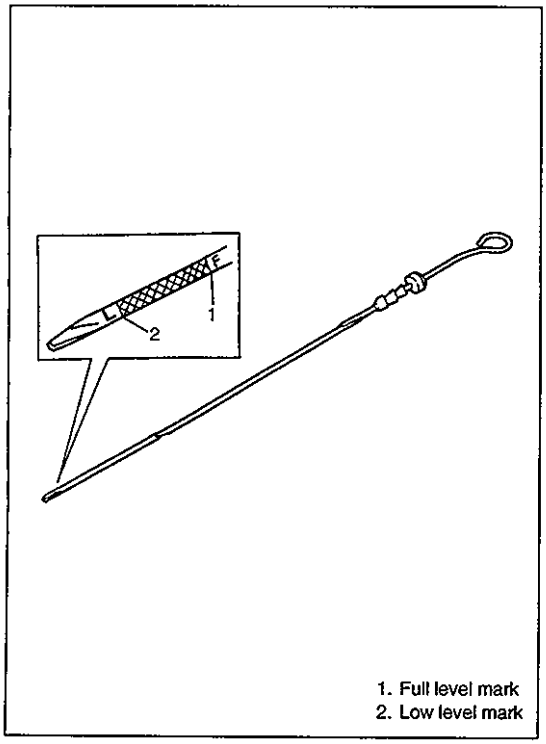

1. Full level mark
2. Low level mark

OIL PRESSURE CHECK

NOTE:
Prior to checking oil pressure, check following items.

- **Oil level in oil pan.**
  If oil level is low, add oil up to Full level mark on oil level gauge.
- **Oil quality.**
  If oil is discolored, or deteriorated, change it.
  For particular oil to be used, refer to the table in "MAINTENANCE SERVICE" section.
- **Oil leaks.**
  If leak is found, repair it.

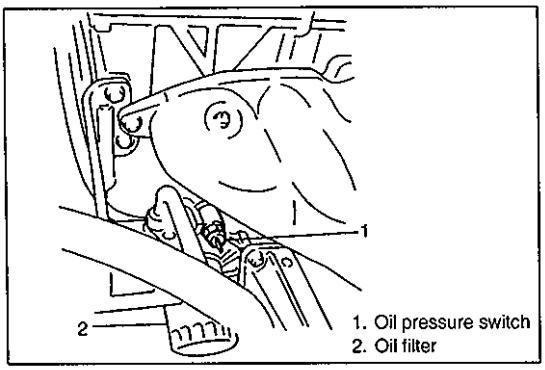

1) Remove oil pressure switch from cylinder block.

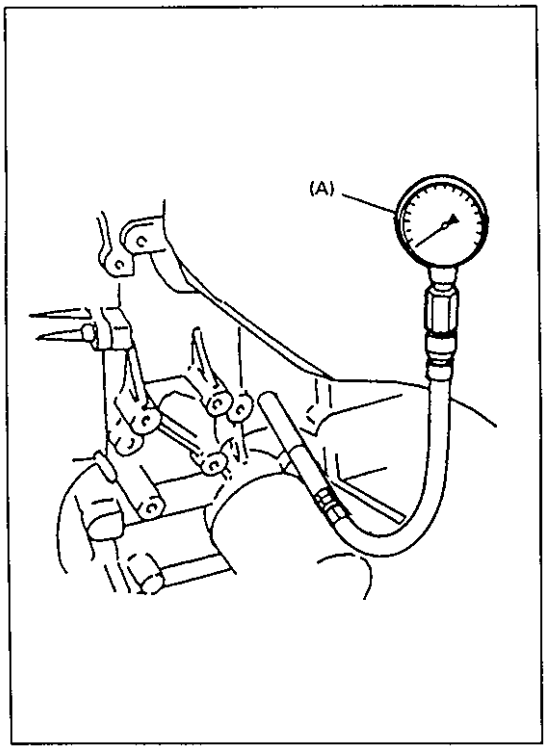

2) Install special tool (Oil pressure gauge) to vacated threaded hole.

Special Tool
(A): 09915-77310

3) Start engine and warm it up to normal operating temperature.

NOTE:
Be sure to place transmission gear shift lever in "Neutral" (shift selector lever to "P" range for A/T model), and set parking brake and block drive wheels.

4) After warming up, raise engine speed to 4,000 r/min and measure oil pressure.

Oil pressure specification:
330 – 430 kPa (3.3 – 4.3 kg/cm², 46.9 – 61.1 psi) at 4,000 r/min (rpm)

5) Stop engine and remove oil pressure gauge.

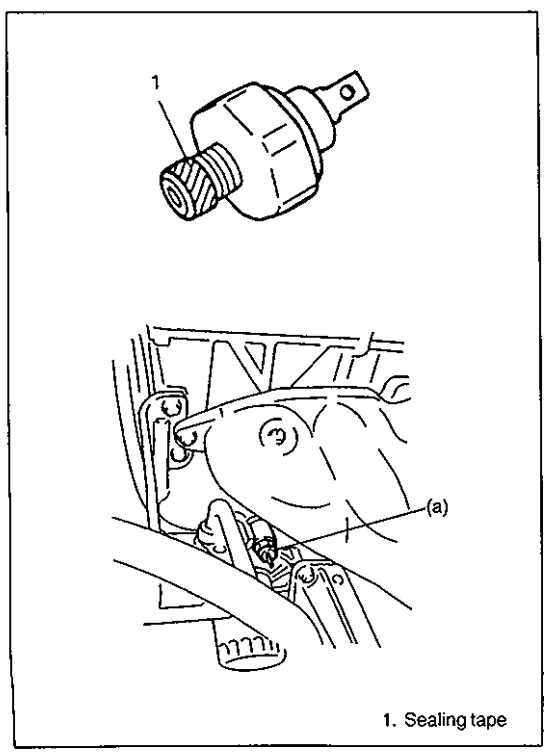

6) Before reinstalling oil pressure switch, be sure to wrap its screw threads with sealing tape and tighten switch to specified torque.

NOTE:
If sealing tape edge is bulged out from screw threads of switch, cut it off.

Tightening Torque
(a): 14 N·m (1.4 kg-m, 10.5 lb-ft)

7) Start engine and check oil pressure switch for oil leakage.
8) Stop engine and connect terminal to pressure switch terminal and cover pressure switch by boot with certainty.

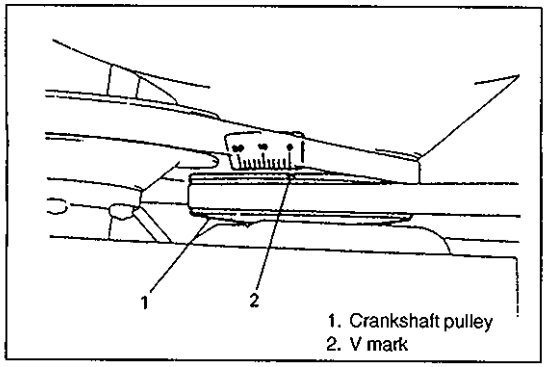

1. Crankshaft pulley
2. V mark

VALVE LASH (CLEARANCE)

1) Remove negative cable at battery.
2) Remove cylinder head cover referring to item "Cylinder Head cover".
3) Using 17 mm socket, turn crankshaft pulley clockwise until "V" mark (in white paint) on pulley aligns with "O" (zero) calibrated on timing belt cover.

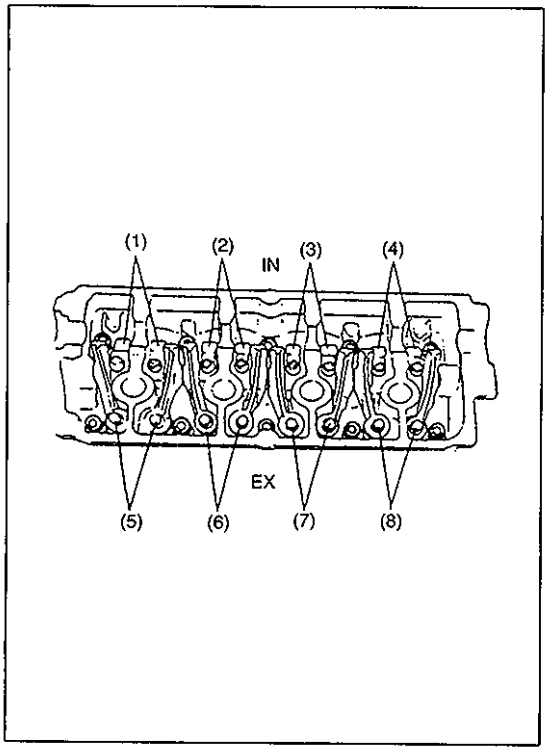

4) Check if the rocker arms of No.1 cylinder are off the respective cam lobes (of camshaft); if so, valves (1), (2), (5) and (7) in left figure are ready for clearance checking and adjustment.
Check valve lashes at valves (1), (2), (5) and (7).
If the rocker arms of No.4 cylinder are off the respective cam lobes, check valve lashes at valves (3), (4), (6) and (8).

NOTE:
When checking valve clearance, insert thickness gauge between camshaft and cam-riding face of rocker arm.

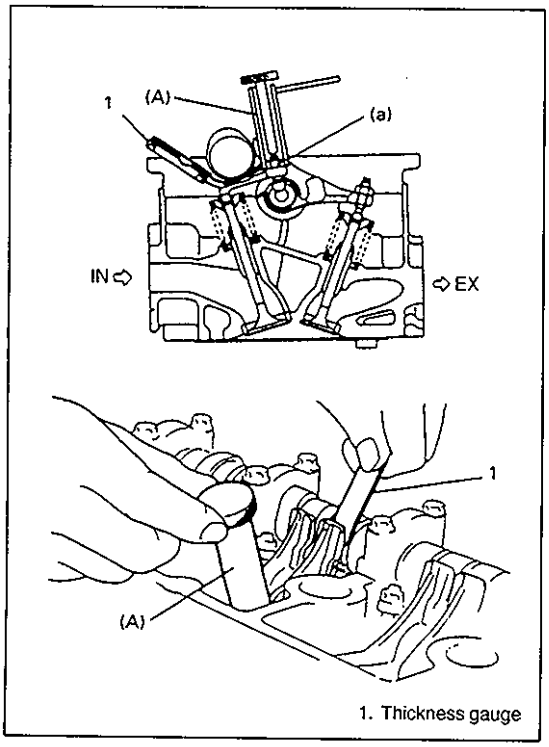

1. Thickness gauge

5) If valve lash is out of specification, adjust it to specification by turning adjusting screw after loosening lock nut.
After adjustment, tighten lock nut to specified torque while holding adjusting screw stationary, and then make sure again that valve lash is within specification.

		When cold (Coolant temperature is 15 – 25°C or 59 – 77°F)	When hot (Coolant temperature is 60 – 68°C or 140 – 154°F)
Valve clearance specification	Intake	0.13 – 0.17 mm (0.005 – 0.007 in.)	0.17 – 0.21 mm (0.007 – 0.008 in.)
	Exhaust	0.23 – 0.27 mm (0.009 – 0.011 in.)	0.27 – 0.31 mm (0.011 – 0.012 in.)

Special Tool
(A): 09917-18210

Tightening Torque
(a): 12 N·m (1.2 kg-m, 9.0 lb-ft)

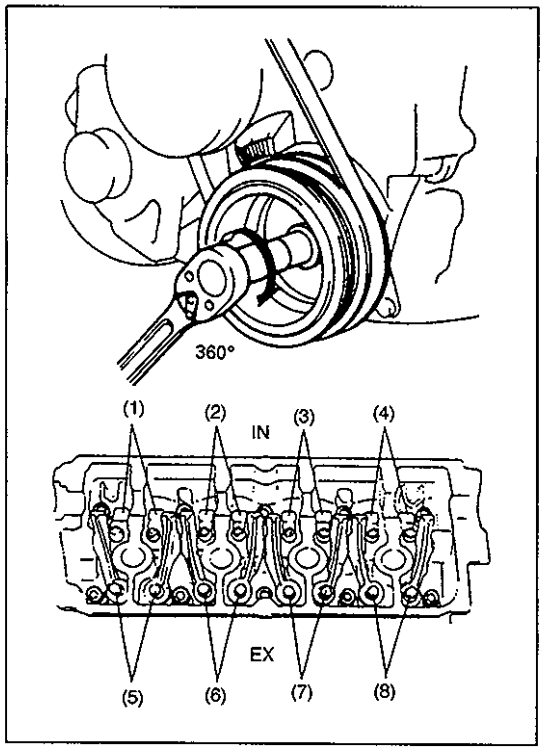

6) After checking and adjusting valve lashes at valves (1), (2), (5) and (7), (or (3), (4), (6) and (8)) rotate crankshaft exactly one full turn (360°) and check the same at valves (3), (4), (6) and (8) (or (1), (2), (5) and (7)). Adjust them as necessary.
7) After checking and adjusting all valves, reverse removal procedure for installation.

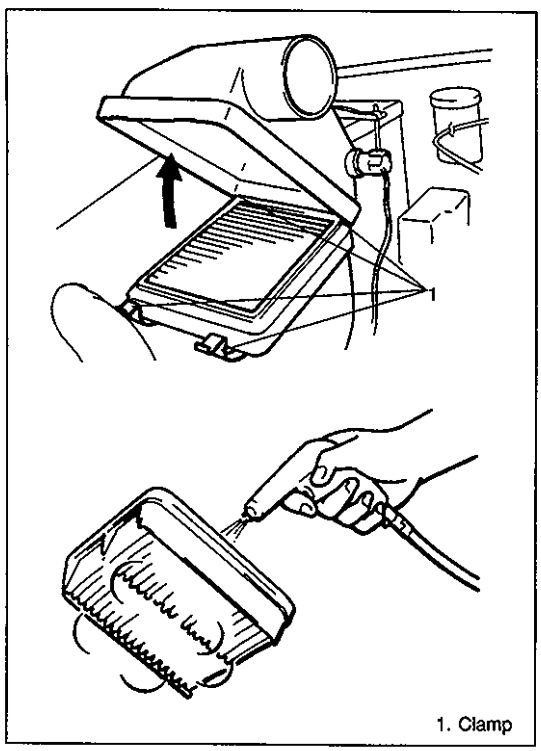

AIR CLEANER ELEMENT

REMOVAL AND INSTALLATION

1) Remove air cleaner case clamps.
2) Remove air cleaner element from case.
3) Check air cleaner element for dirt.
4) If necessary, blow off dust by compressed air from air outlet side of element.
   If excessively dirty, replace element.
5) Reverse removal procedure for installation.

CYLINDER HEAD COVER

REMOVAL

1) Disconnect negative cable at battery.
2) Remove ignition coil assemblies with high-tension cord.
3) Disconnect PCV valve and breather hose from head cover.

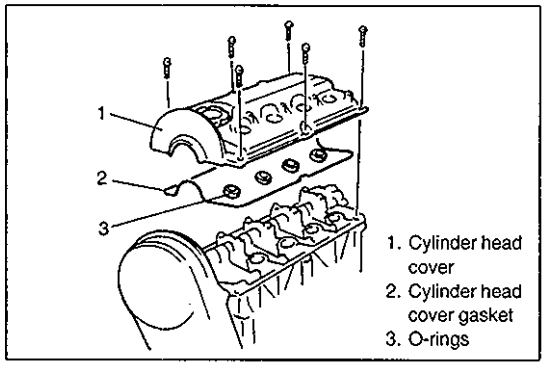

4) Remove cylinder head cover with cylinder head cover gasket and O-rings.

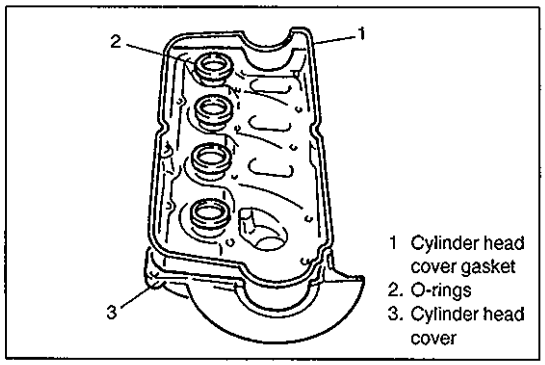

INSTALLATION

1) Install O-rings and cylinder head cover gasket to cylinder head cover.

NOTE:
Be sure to check each of these parts for deterioration or any damage before installation and replace if found defective.

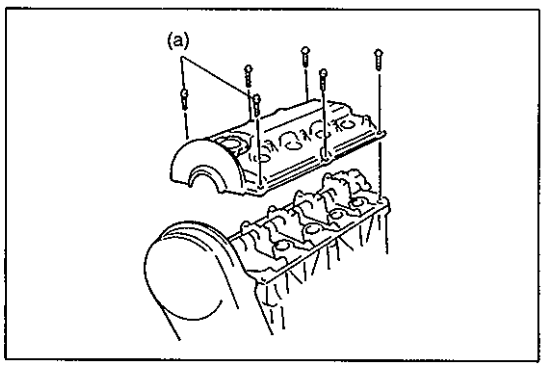

2) Install cylinder head cover to cylinder head and tighten cover bolts to specified torque.

Tightening Torque
(a): 10 N·m (1.0 kg-m, 7.5 lb-ft)

NOTE:
When installing cylinder head cover, use care so that cylinder head cover gasket or O-rings will not get out of place or fall off.

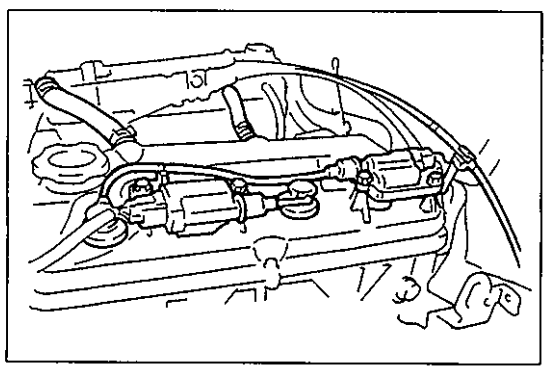

3) Install ignition coil assemblies with high-tension cord.
4) Connect PCV valve and breather hose to head cover.
5) Connect negative cable at battery.

THROTTLE BODY AND INTAKE MANIFOLD

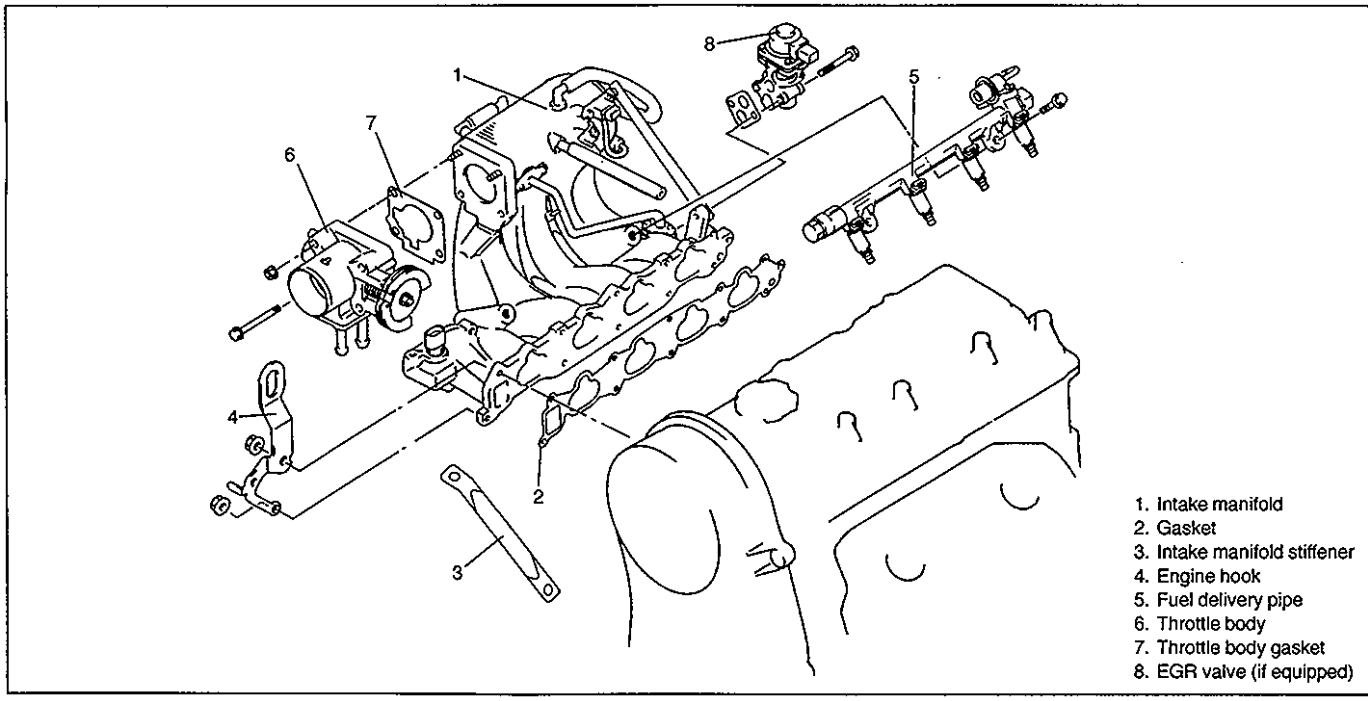

REMOVAL

1) Relieve fuel pressure according to fuel pressure relief procedure described in section 6.
2) Disconnect negative cable at battery.

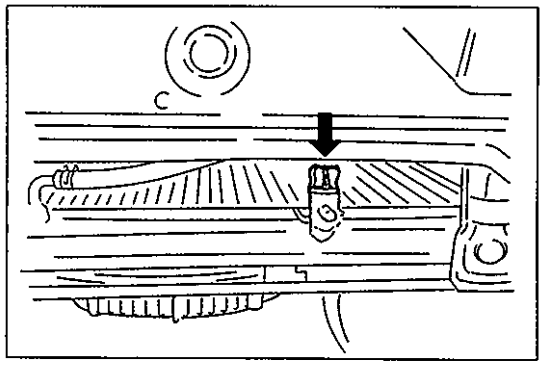

3) Drain cooling system.

WARNING:
To help avoid danger of being burned, do not remove drain plug and radiator cap while engine and radiator are still hot. Scalding fluid and steam can be blown out under pressure if plug and cap are taken off too soon.

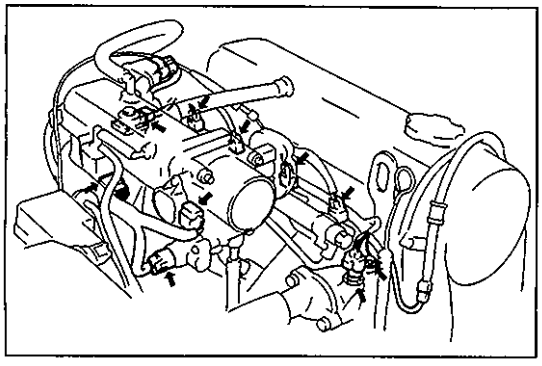

4) Remove air intake hose.
5) Disconnect following electric lead wires:
   - EGR valve (if equipped)
   - Ground wires from intake manifold
   - Engine coolant temperature sensor
   - Injectors lead wires at the coupler
   - EVAP canister purge valve
   - Throttle position sensorIdle air control valve

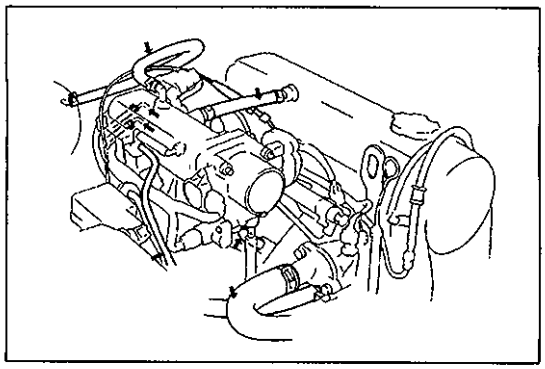

6) Disconnect accelerator cable from throttle body.
7) Disconnect following hoses:
   - Brake booster hose from intake manifold
   - Canister purge hose from EVAP canister purge valve
   - Engine cooling water (coolant) hose (outlet side) from throttle body
   - Radiator inlet hose from thermostat cap
   - PCV hoses from intake manifold and throttle body
   - Fuel feed hose and return hose from each pipe

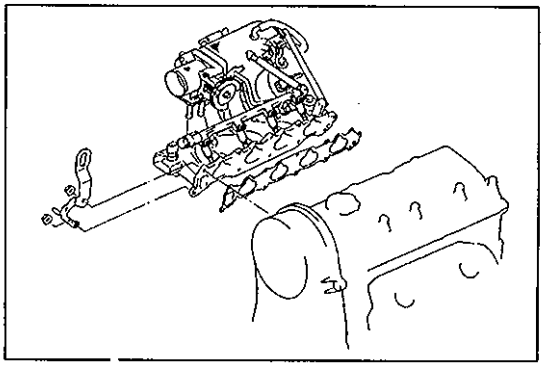

8) Remove intake manifold with throttle body from cylinder head, and then its gasket.

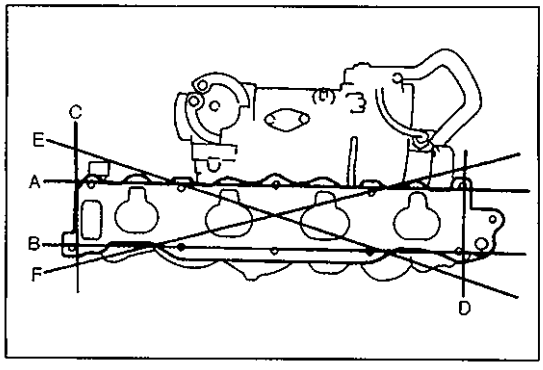

INSPECTION

- Using a straight edge and thickness gauge, check surface at a total of 6 locations. If distortion limit, given below, is exceeded, correct gasketed surface or replace intake manifold.

  Limit of distortion: 0.07 mm (0.003 in.)

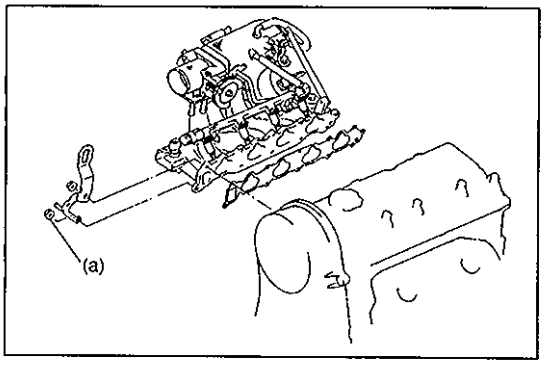

INSTALLATION

Reverse removal procedure for installation noting the followings.

- Use new intake manifold gasket.
- Tighten nuts to specified torque.

  Tightening Torque
  (a): 23 N·m (2.3 kg-m, 17.0 lb-ft)

- Adjust accelerator cable play, referring to section 6E.
- Check to ensure that all removed parts are back in place. Reinstall any necessary parts which have not been reinstalled.
- Refill cooling system, referring to "ENGINE COOLING" section.
- Adjust water pump drive belt tension, referring to "ENGINE COOLING" section.
- Upon completion of installation, turn ignition switch ON but engine OFF and check for fuel leaks.
- Finally, start engine and check for engine coolant leaks.

EXHAUST MANIFOLD

WARNING:
To avoid danger of being burned, do not service exhaust system while it is still hot. Service should be performed after system cools down.

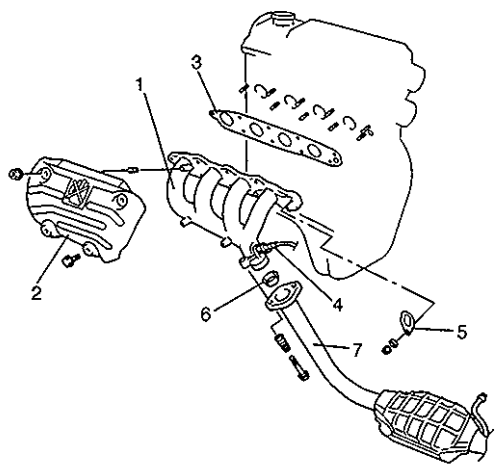

1. Exhaust manifold
2. Exhaust manifold cover
3. Gasket
4. Heated oxygen sensor (if equipped)
5. Engine hook
6. Pipe gasket
7. Exhaust pipe

REMOVAL

1) Disconnect negative cable at battery.
2) Disconnect heated oxygen sensor coupler (if equipped).
3) Remove exhaust manifold cover of exhaust manifold.
4) Remove or disconnect exhaust pipe from exhaust manifold.
5) Remove exhaust manifold and its gasket from cylinder head.

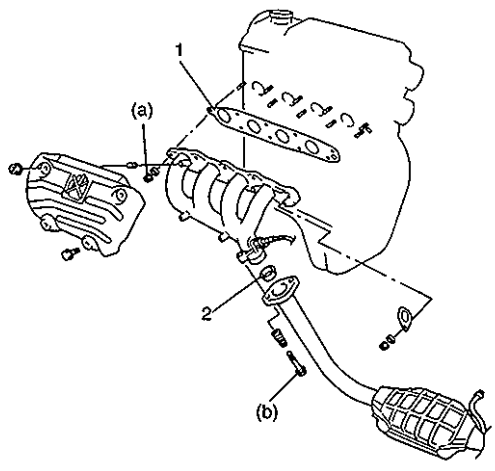

1. Gasket
2. Pipe gasket

INSTALLATION

1) Install new gasket to cylinder head.
2) Install exhaust manifold.
   Tighten bolts and nuts to specified torque.

   Tightening Torque
   (a): 23 N·m (2.3 kg-m, 17.0 lb-ft)

3) Install pipe gasket and install exhaust pipe to exhaust manifold.
   Before installing pipe gasket, check it for deterioration or damage, and replace as necessary.
   Tighten pipe fasteners to specified torque.

   Tightening Torque
   (b): 50 N·m (5.0 kg-m, 36.5 lb-ft)

4) Install upper cover to exhaust manifold.
5) Connect heated oxygen sensor connector and fit connector to bracket. (if equipped)
6) Connect negative cable at battery.
7) Check exhaust system for exhaust gas leakage.

TIMING BELT AND BELT TENSIONER

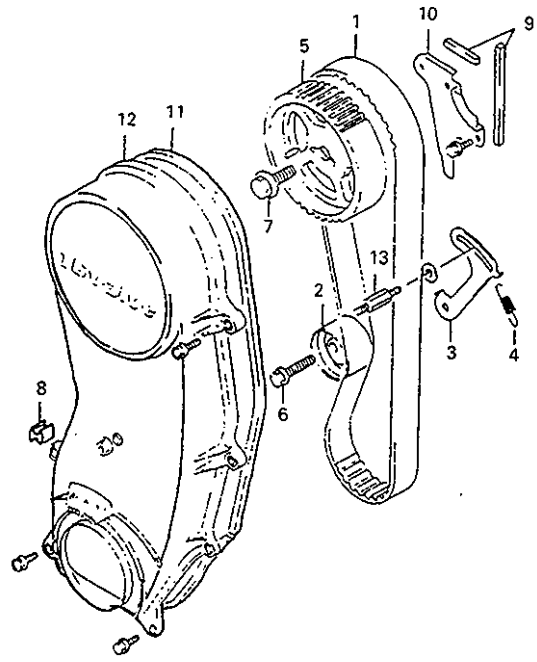

1. Timing belt
2. Tensioner
3. Tensioner plate
4. Tensioner spring
5. Camshaft timing pulley
6. Tensioner bolt
7. Pulley bolt
8. Seal
9. Inside cover seal
10. Inside cover
11. Outside cover seal
12. Outside cover
13. Tensioner stud

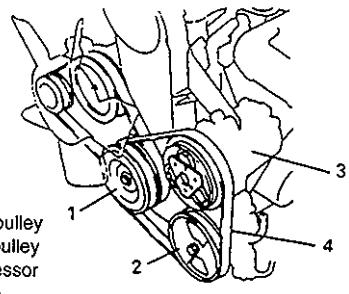

1. Crankshaft pulley
2. P/S pump pulley
3. A/C compressor (if equipped)
4. P/S belt

REMOVAL

1) Disconnect negative cable at battery.
2) Drain engine coolant and disconnect inlet hose from radiator.
3) Remove power steering pump belt or A/C compressor belt, if equipped.
4) Remove radiator cooling fan, water pump pulley, water pump drive belt and fan shroud.

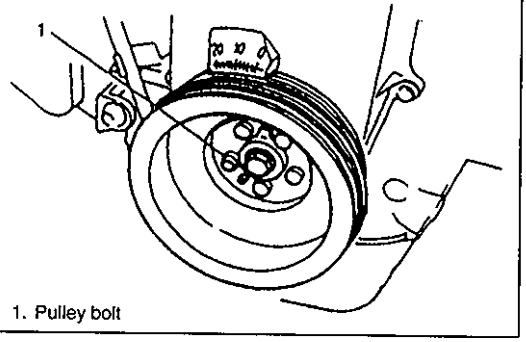

1. Pulley bolt

5) Remove crankshaft pulley by removing 5 pulley bolts.

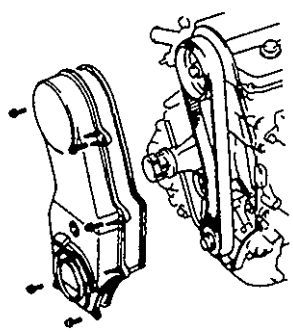

6) Remove timing belt outside cover.

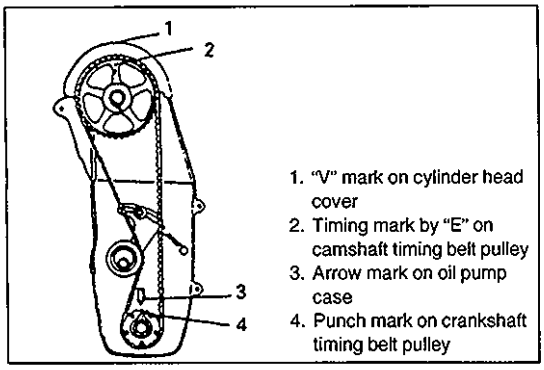

1. "V" mark on cylinder head cover
2. Timing mark by "E" on camshaft timing belt pulley
3. Arrow mark on oil pump case
4. Punch mark on crankshaft timing belt pulley

7) For installation of timing belt, align 4 timing marks as shown in figure by turning crankshaft.

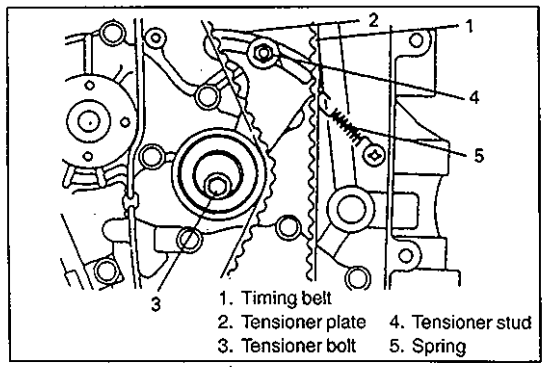

1. Timing belt
2. Tensioner plate
3. Tensioner bolt
4. Tensioner stud
5. Spring

8) Remove timing belt tensioner, tensioner plate, tensioner spring and timing belt.

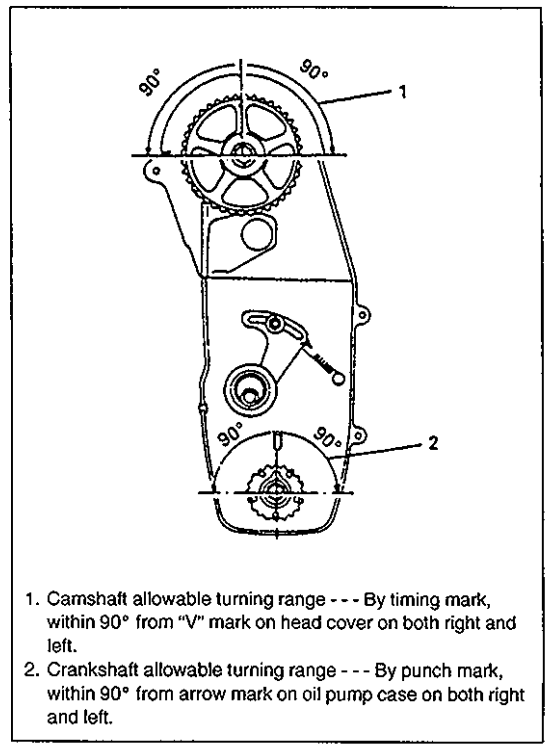

1. Camshaft allowable turning range - - - By timing mark, within 90° from "V" mark on head cover on both right and left.
2. Crankshaft allowable turning range - - - By punch mark, within 90° from arrow mark on oil pump case on both right and left.

CAUTION:

- **After timing belt is removed, never turn camshaft and crankshaft independently more than such an extent as shown in figure. If turned, interference may occur among piston and valves, and parts related to piston and valves may be damaged.**
- **Never bend timing belt.**

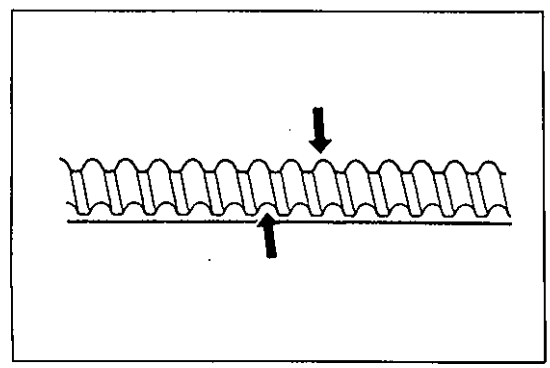

INSPECTION

- Inspect timing belt for wear or crack.
  Replace it as necessary.

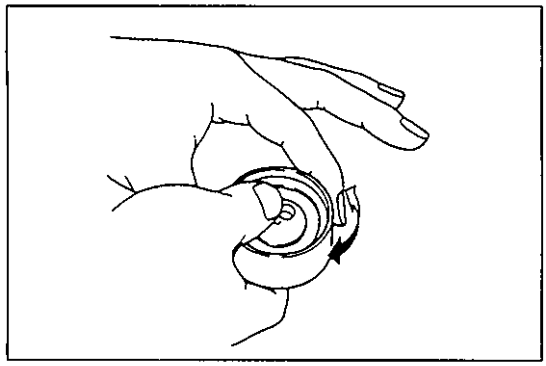

- Inspect tensioner for smooth rotation.

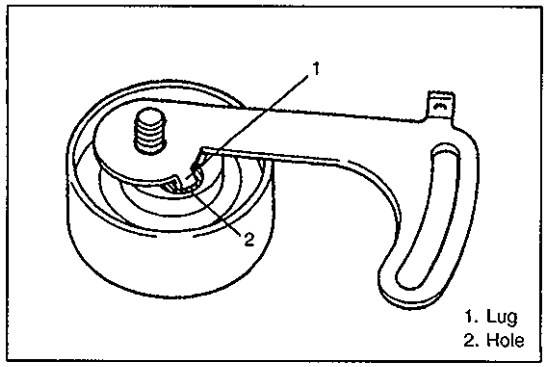

1. Lug
2. Hole

INSTALLATION

1) Install tensioner plate to tensioner.
   Insert lug of tensioner plate into hole in tensioner.

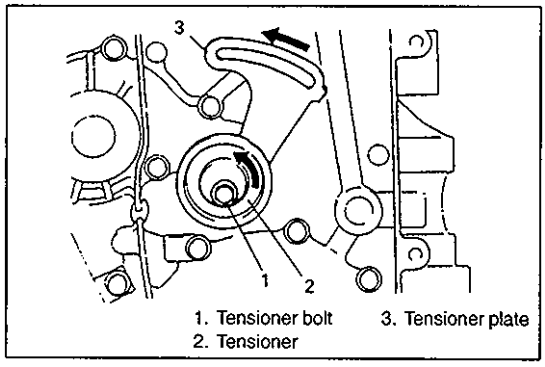

1. Tensioner bolt
2. Tensioner
3. Tensioner plate

2) Install tensioner and tensioner plate:
   Do not tighten tensioner bolt with wrench yet. Hand tighten only at this time.
   Check to ensure that plate movement in arrow direction as shown in figure causes tensioner to move in the same direction. If no associated movement between plate and tensioner occurs, remove tensioner and plate again and reinsert plate lug into tensioner hole.

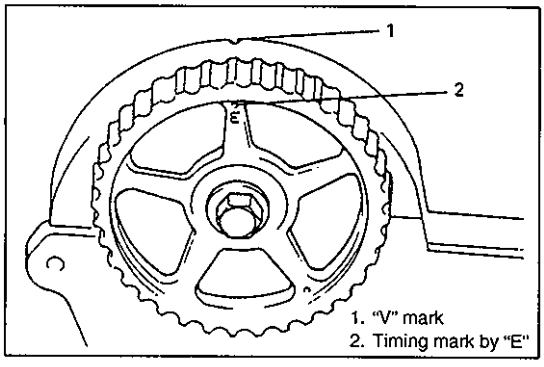

1. "V" mark
2. Timing mark by "E"

3) Check that timing mark on camshaft timing belt pulley is aligned with "V" mark on cylinder head cover. If not, align two marks by turning camshaft but be careful not to turn it more than its allowable turning range which is described on page 6A-17.

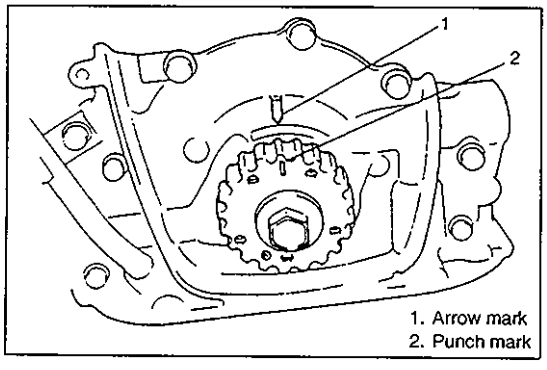

1. Arrow mark
2. Punch mark

4) Check that punch mark on crankshaft timing belt pulley is aligned with arrow mark on oil pump case. If not, align two marks by turning crankshaft but be careful not to turn it more than its allowable turning range which is described on page 6A-17.

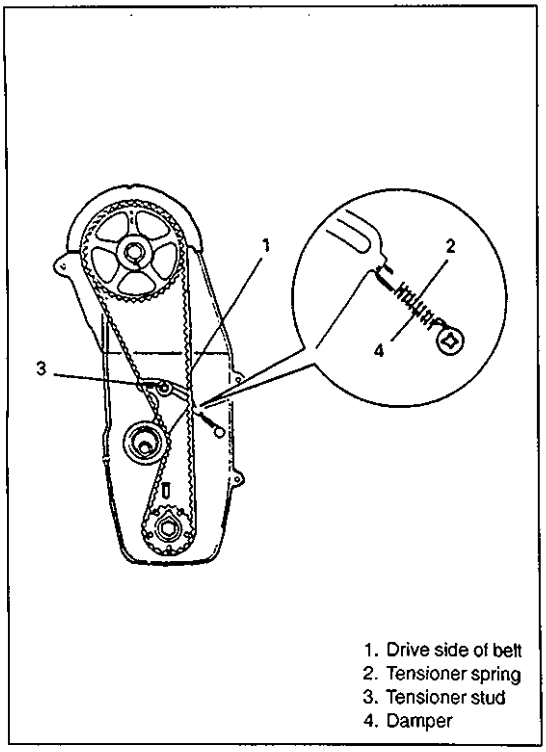

1. Drive side of belt
2. Tensioner spring
3. Tensioner stud
4. Damper

5) Install timing belt and tensioner spring.
With two sets of marks aligned and tensioner plate pushed up, install timing belt on two pulleys in such a way that drive side of belt is free from any slack.
And then install tensioner spring as shown in figure, and hand-tighten tensioner stud.

NOTE:

- **When installing timing belt, match arrow mark (⇨) on timing belt with rotating direction of crankshaft.**
- **In this state, No. 4 piston is at top dead center of compression stroke.**

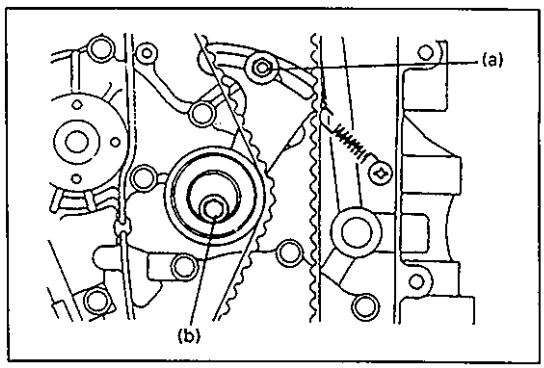

6) To take up slack of timing belt, turn crankshaft two rotations clockwise after installing it. After making sure that belt is free from slack, tighten tensioner stud first and then tensioner bolt to each specified torque.
Then confirm again that two sets of marks are aligned respectively.

Tightening Torque
(a): 10 N·m (1.0 kg-m, 7.5 lb-ft)
(b): 27 N·m (2.7 kg-m, 19.5 lb-ft)

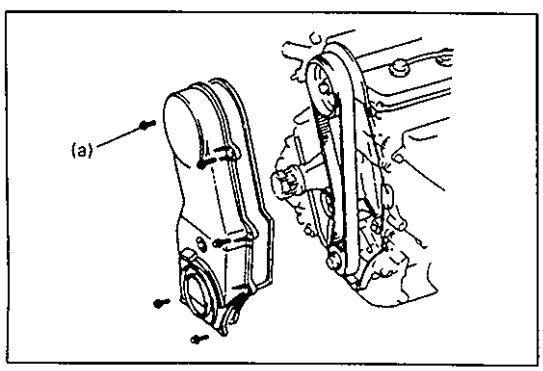

7) Install timing belt outside cover.
Before installing, make sure that seal is between water pump and oil pump case.

Tightening Torque
(a): 10 N·m (1.0 kg-m, 7.5 lb-ft)

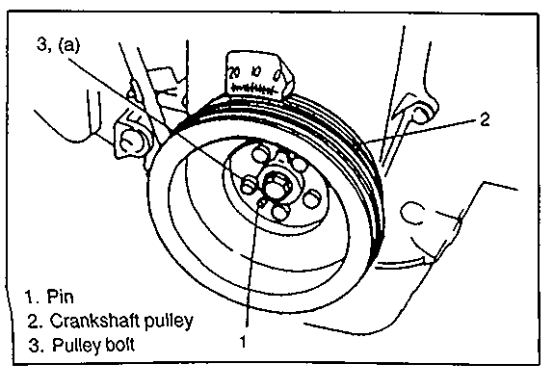

1. Pin
2. Crankshaft pulley
3. Pulley bolt

8) Install crankshaft pulley.
Fit hole of pulley to pin on crankshaft timing belt pulley, and tighten pulley bolts to specified torque.

Tightening Torque
(a): 16 N·m (1.6 kg-m, 11.5 lb-ft)

9) Install radiator fan shroud, water pump pulley, cooling fan and water pump drive belt.
   Adjust water pump drive belt tension, referring to "ENGINE COOLING" section.
10) Install power steering pump belt or A/C compressor belt, if equipped.
   Adjust its belt tension, referring to section 0B.
11) Connect radiator inlet hose to radiator.
12) Refill cooling system, referring to "ENGINE COOLING" section.
13) Connect negative cable to battery.
14) Verify that there is no coolant leakage at hose connection.

OIL PAN AND OIL PUMP STRAINER

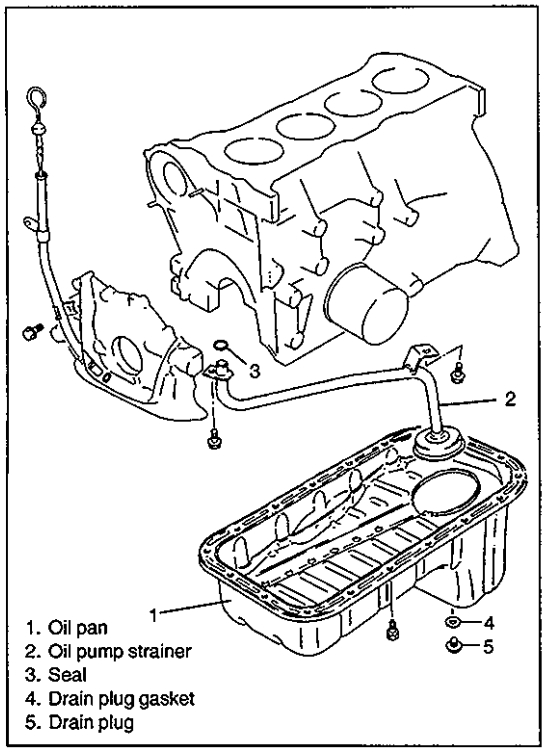

1) Drain engine oil by removing drain plug.

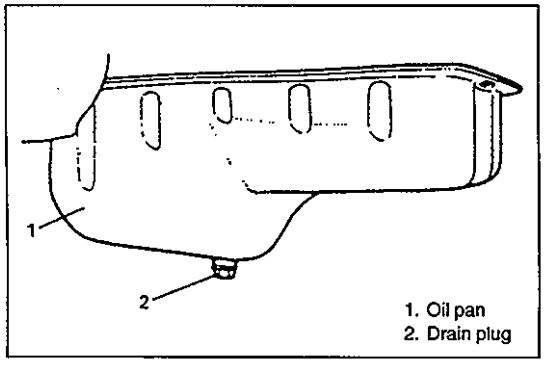

2) Remove clutch housing (torque converter housing for A/T) lower plate.

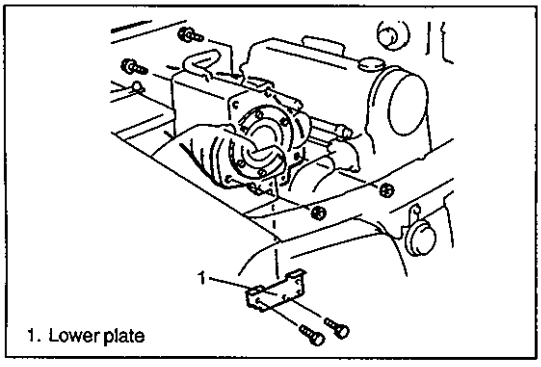

3) Remove oil pan and then oil pump strainer.

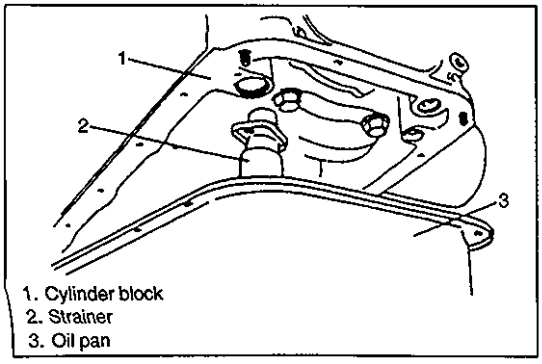

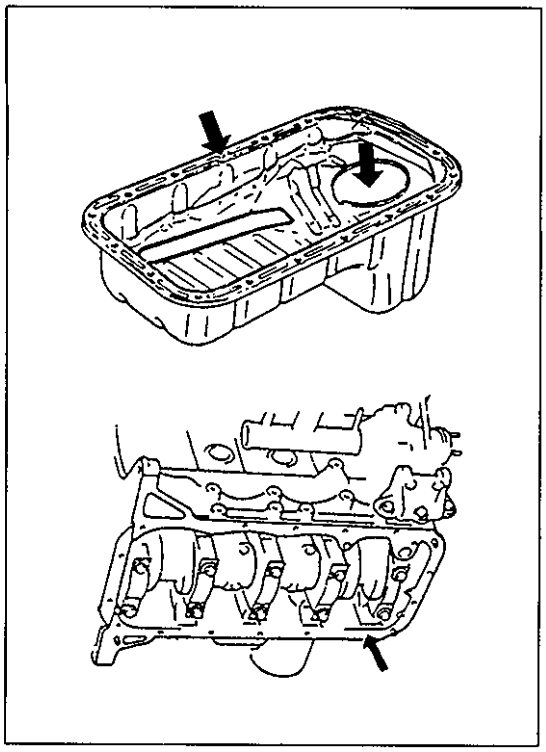

CLEANING

- Clean mating surfaces of oil pan and cylinder block. Remove oil, old sealant, and dusts from mating surfaces and oil pan inside.

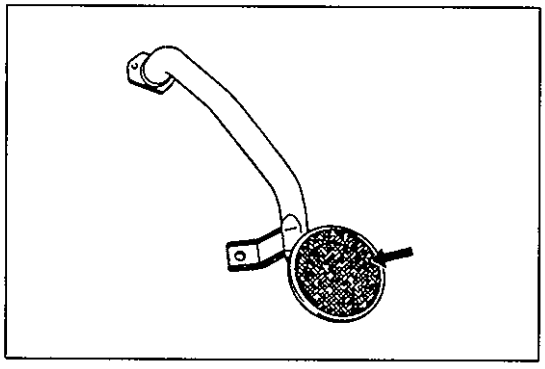

- Clean oil pump strainer screen.

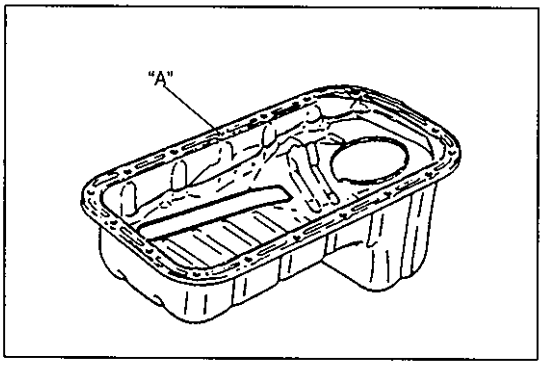

INSTALLATION

1) Apply sealant to oil pan mating surface continuously as shown in figure.

   "A" Sealant: 99000-31150

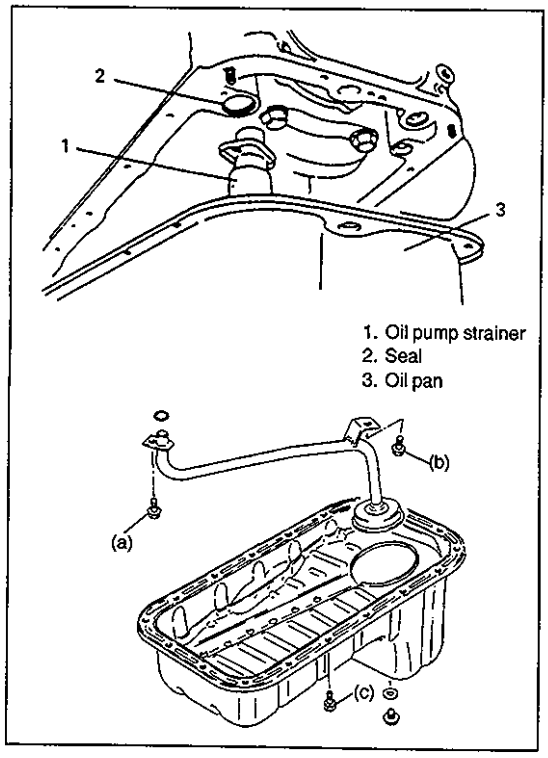

1. Oil pump strainer
2. Seal
3. Oil pan

2) Install oil pump strainer and oil pan.
Install seal in the position as shown in figure.
Tighten strainer bolt first and then bracket bolt to specified torque.

Tightening Torque
(a): 10 N·m (1.0 kg-m, 7.5 lb-ft)
(b): 10 N·m (1.0 kg-m, 7.5 lb-ft)

After fitting oil pan to cylinder block, run in securing bolts and start tightening at the center: move wrench outward, tightening one bolt at a time.
Tighten bolts to specified torque.

Tightening Torque
(c): 10 N·m (1.0 kg-m, 7.5 lb-ft)

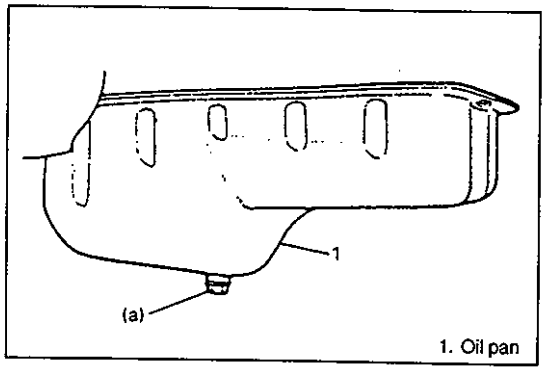

1. Oil pan

3) Install gasket and drain plug to oil pan.
Tighten drain plug to specified torque.

Tightening Torque
(a): 35 N·m (3.5 kg-m, 25.5 lb-ft)

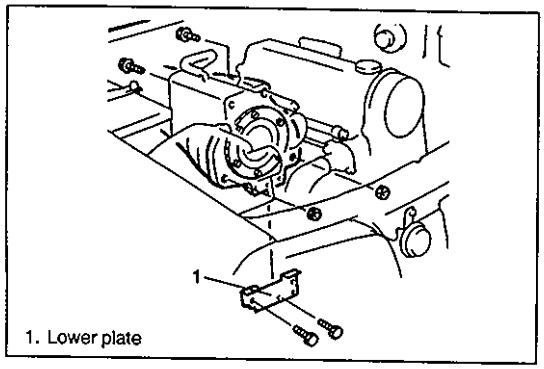

1. Lower plate

4) Install clutch (torque converter) housing lower plate.

5) Refill engine with engine oil, referring to item "ENGINE OIL CHANGE" in section 0B.
6) Verify that there is no engine oil leakage and differential oil leakage at each connection.

OIL PUMP

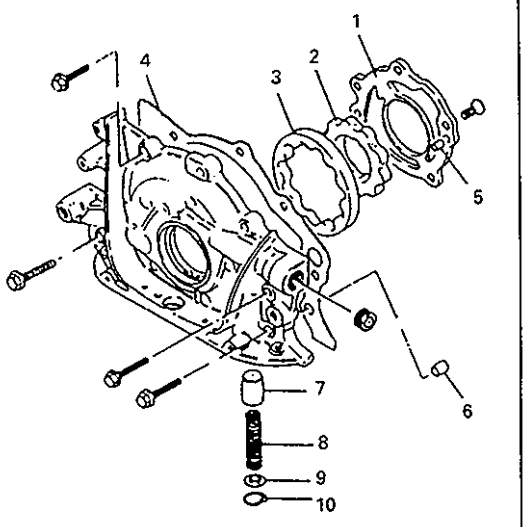

1. Rotor plate
2. Inner rotor
3. Outer rotor
4. Gasket
5. Pin
6. Pin
7. Relief valve
8. Spring
9. Retainer
10. Retainer ring

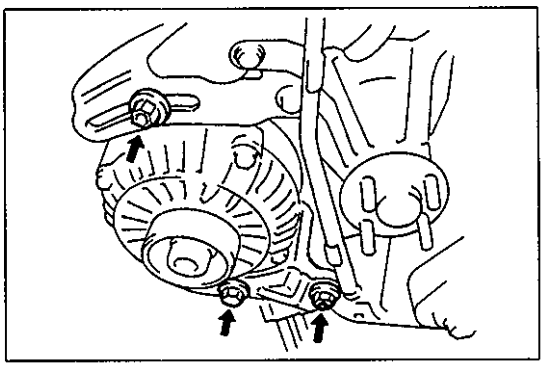

REMOVAL

1) Disconnect negative cable at battery.
2) Remove timing belt as previously outlined.
3) Remove generator and its bracket.

NOTE:
When installing bracket, fasten nut first.

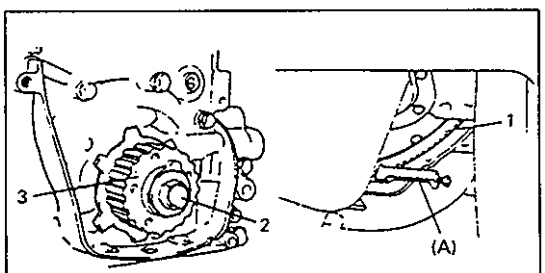

1. Flywheel (Drive plate for A/T)
2. Pulley bolt
3. Crank timing belt pulley

4) Remove crankshaft timing belt pulley.
To lock crankshaft, engage special tool (gear stopper) with flywheel ring gear (drive plate ring gear for A/T).
With crankshaft locked, remove crankshaft timing belt pulley bolt.

Special Tool
(A): 09927-56010

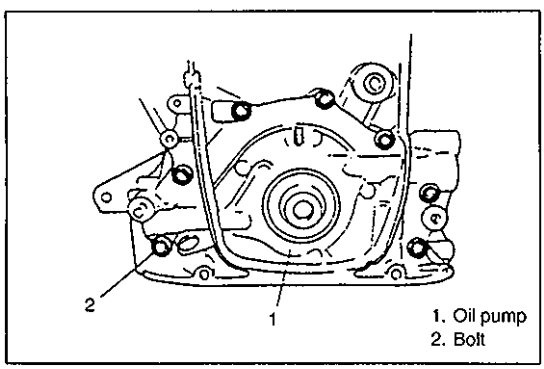

1. Oil pump
2. Bolt

5) Remove oil pan and oil pump strainer as previously outlined.
6) Remove oil pump assembly after removing bolts.

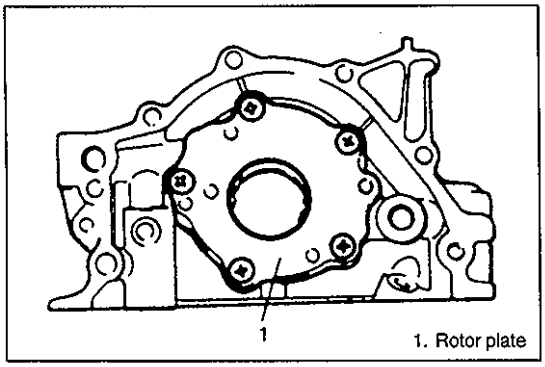

DISASSEMBLY

1) Remove oil level gauge guide bolt and pull out guide from oil pump.
2) Remove rotor plate.

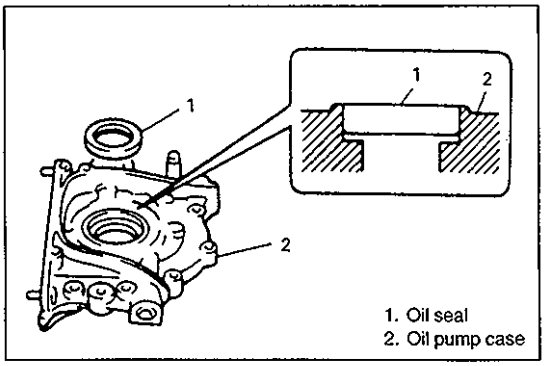

INSPECTION

- Check oil seal lip for fault or other damage. Replace as necessary.

NOTE:
When installing oil seal, press-fit it till its end face is flush with oil pump case end face.

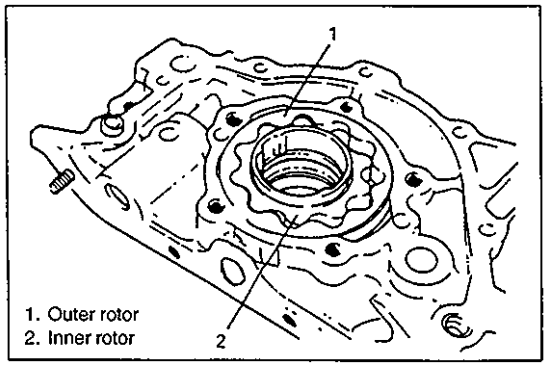

- Check outer and inner rotors, rotor plate, and oil pump case for excessive wear or damage.

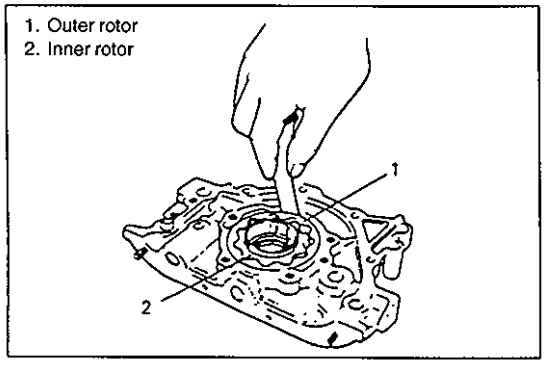

MEASUREMENT

- **Radial clearance**

Check radial clearance between outer rotor and case, using thickness gauge.
If clearance exceeds its limit, replace outer rotor or case.

Limit on radial clearance between outer rotor and case: 0.310 mm (0.0122 in.)

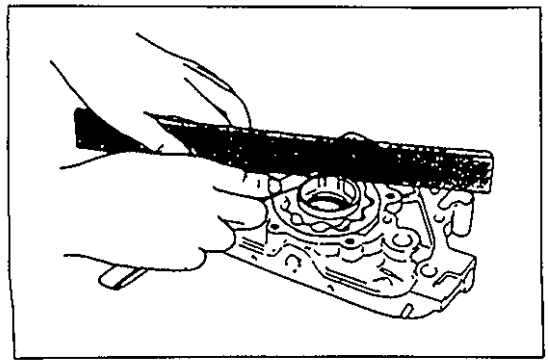

- **Side clearance**

Using straight edge and thickness gauge, measure side clearance.

Limit on side clearance: 0.15 mm (0.0059 in.)

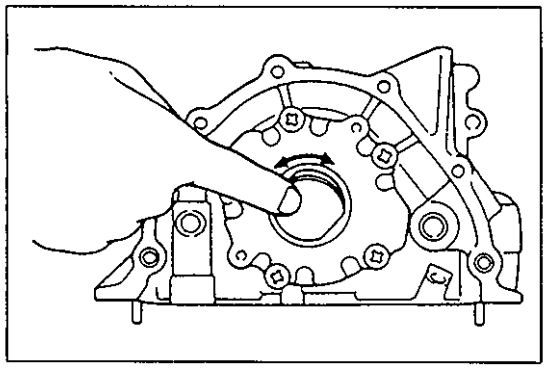

ASSEMBLY

1) Wash, clean and then dry all disassembled parts.
2) Apply thin coat of engine oil to inner and outer rotors, oil seal lip portion, and inside surfaces of oil pump case and plate.
3) Install outer and inner rotors to pump case.
4) Install rotor plate. Tighten 5 screw securely.
   After installing plate, check to be sure that gears turn smoothly by hand.

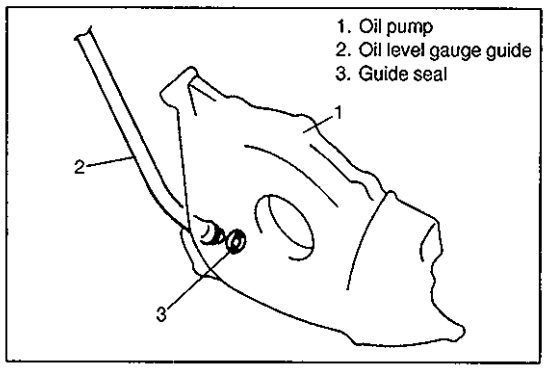

5) Apply engine oil to guide seal and install guide seal and guide.

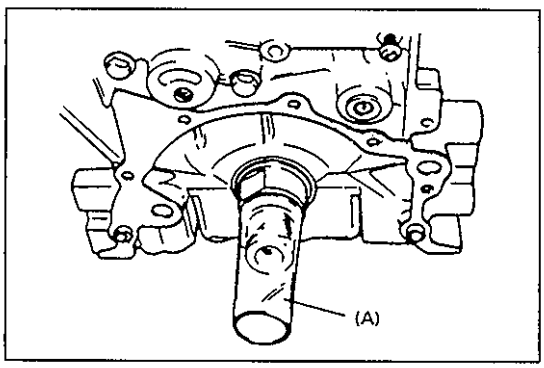

INSTALLATION

1) Install two oil pump pins and oil pump gasket to cylinder block. Use a new gasket.
2) To prevent oil seal lip from being damaged or upturned when installing oil pump to crankshaft, fit special tool (Oil seal guide) to crankshaft, and apply engine oil to special tool.

   Special Tool
   (A): 09926-18210

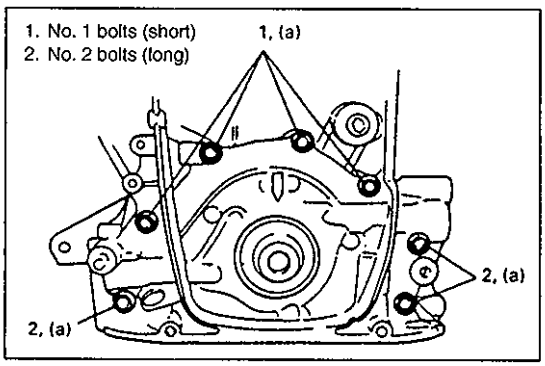

3) Install oil pump to cylinder block.
   As there are 2 types of oil pump bolts, refer to figure for their correct use and tighten them to specified torque.

   Tightening Torque
   (a): 10 N·m (1.0 kg-m, 7.5 lb-ft)

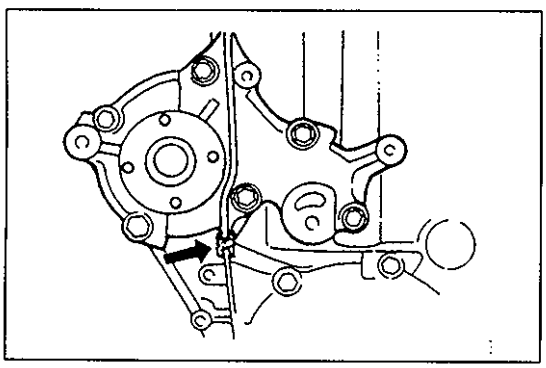

4) Install rubber seal between oil pump and water pump.

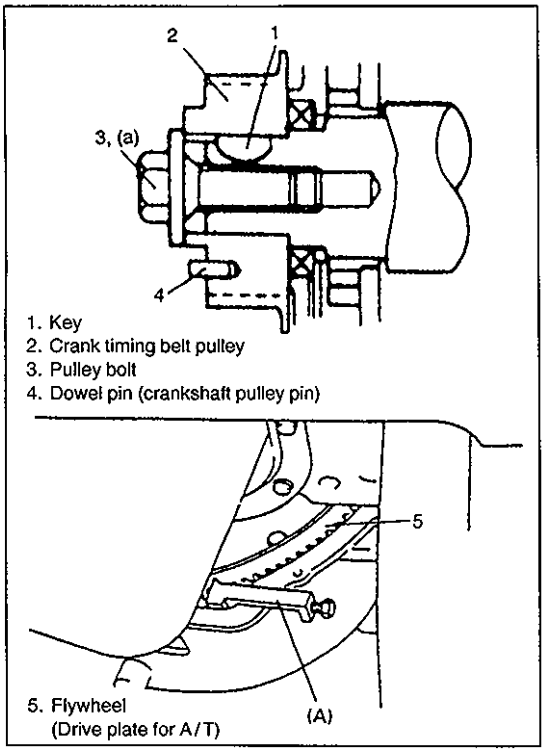

1. Key
2. Crank timing belt pulley
3. Pulley bolt
4. Dowel pin (crankshaft pulley pin)
5. Flywheel (Drive plate for A/T)

5) Install timing pulley key and crank timing belt pulley. Refer to figure for proper installation of these parts.
With crankshaft locked, tighten crank timing belt pulley bolt to specified torque.

Tightening Torque
(a): 128 N·m (12.8 kg-m, 92.5 lb-ft)

Special Tool
(A): 09927-56010

6) Install timing belt, tensioner, oil pump strainer, oil pan and other parts as previously outlined.
7) Check to ensure that all removed parts are back in place. Reinstall any necessary parts which have not been reinstalled.
8) Adjust water pump drive belt tension, referring to "ENGINE COOLING" section.
9) Adjust power steering pump belt tension or A/C compressor belt tension, if equipped. Refer to section 0B.
10) Refill engine with engine oil, referring to item "ENGINE OIL CHANGE" in section 0B.
11) Connect negative cable at battery.
12) Verify that there is no coolant leakage and each oil leakage at each connection.
13) After completing installation, check oil pressure by running engine.

ROCKER ARMS, ROCKER SHAFT AND CAMSHAFT

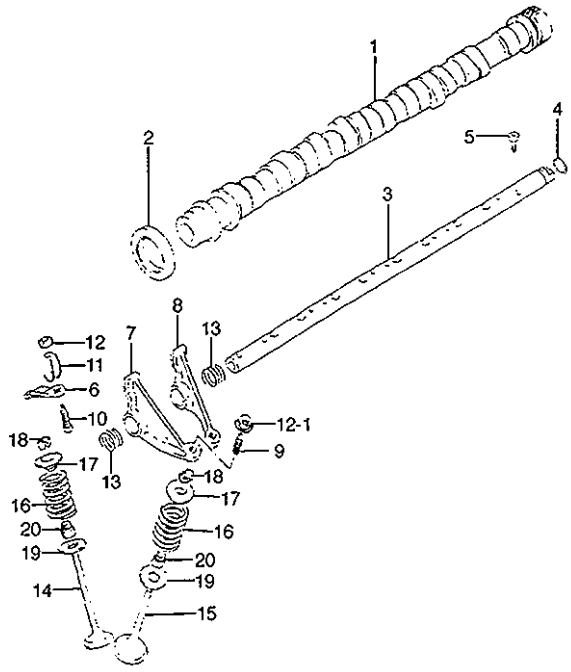

1. Camshaft
2. Camshaft oil seal
3. Rocker arm shaft
4. O-ring
5. Rocker shaft bolt
6. Rocker arm (IN)
7. Rocker arm No. 1 (EX)
8. Rocker arm No. 2 (EX)
9. Valve adjusting screw
10. Valve adjusting screw
11. Clip
12. Lock nut (without flange)
12-1. Lock nut (with flange)
13. Rocker arm spring
14. Intake valve
15. Exhaust valve
16. Valve spring
17. Valve spring retainer
18. Valve cotter
19. Valve spring seat
20. Valve stem seal

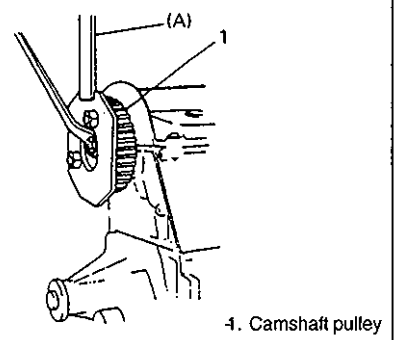

1. Camshaft pulley

REMOVAL

1) Disconnect negative cable at battery.
2) Remove radiator referring to "ENGINE COOLING" section.
3) Remove timing belt as previously outlined.
4) Remove camshaft timing belt pulley by using special tool.

Special Tool
(A): 09917-68220

5) Remove cylinder head cover as previously outlined.

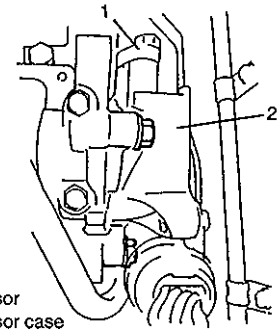

1. CMP sensor
2. CMP sensor case

6) Disconnect CMP sensor connector and remove CMP sensor case from cylinder head.
Place a container or rag under CMP sensor case, for a small amount of oil flows out during removal of case.

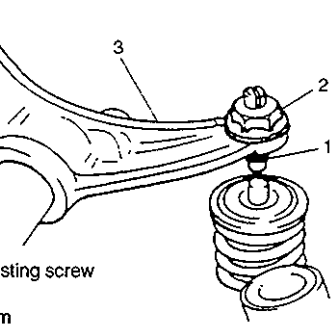

1. Valve adjusting screw
2. Lock nut
3. Rocker arm

7) After loosening all valve adjusting screw lock nuts, turn adjusting screws back all the way to allow all rocker arms to move freely.

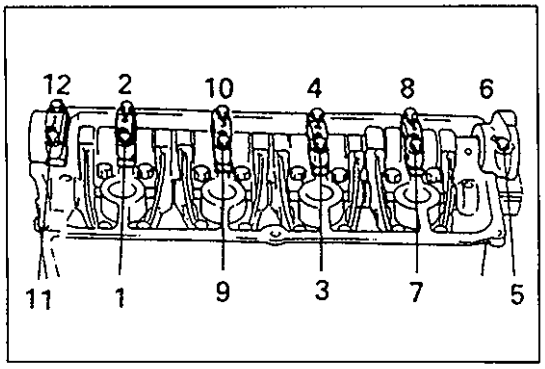

8) Remove camshaft housing and camshaft.

NOTE:
To remove camshaft housing bolts, loosen them in such order as indicated in figure, a little at a time.

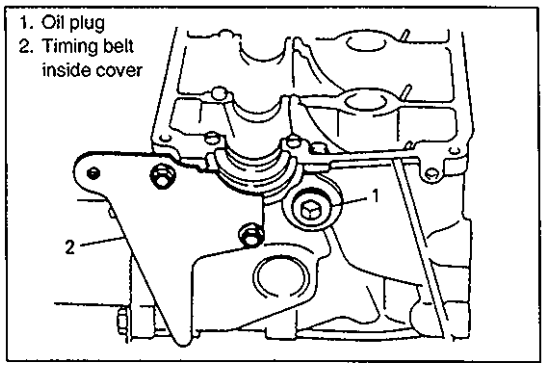

9) Remove rocker arm shaft plug and timing belt inside cover.

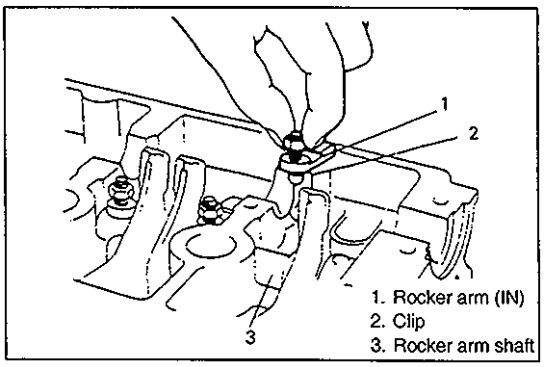

10) Remove intake rocker arm with clip from rocker arm shaft.

NOTE:
Do not bend clip when removing intake rocker arm.

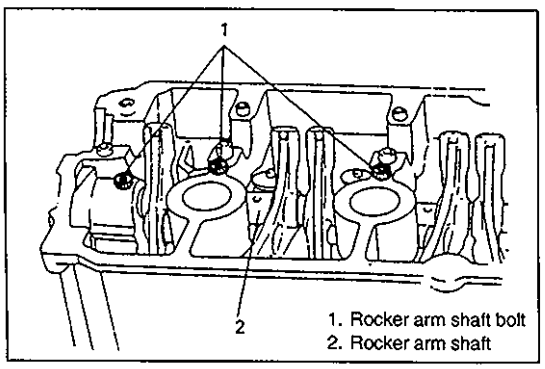

11) Remove rocker arm shaft bolts.

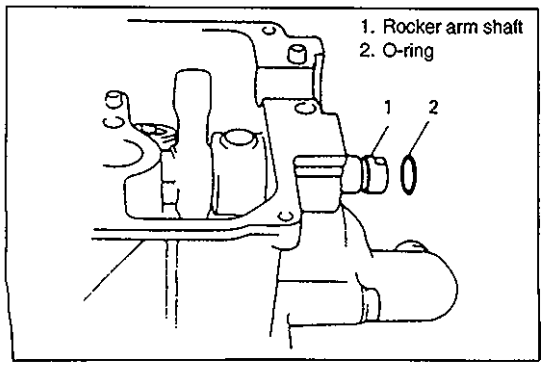

12) Push off rocker arm shaft end to CMP sensor case side and remove O-ring from shaft.

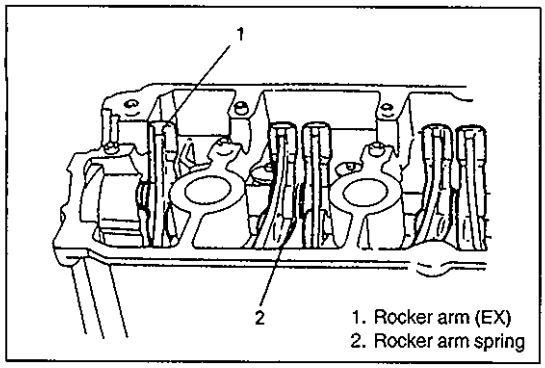

13) Remove exhaust rocker arms and rocker arm spring by pulling rocker arm shaft to front side.

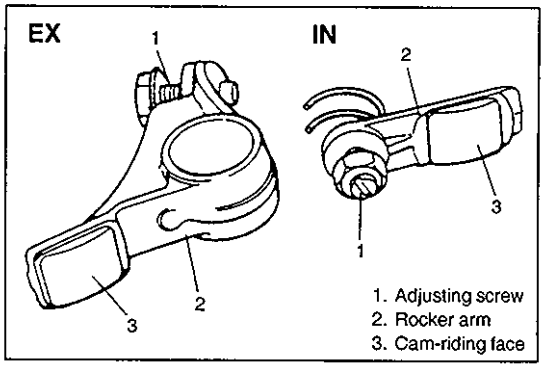

INSPECTION

Adjusting Screw and Rocker Arm

If tip of adjusting screw is badly worn, replace it.
Rocker arm must be replaced if its cam-riding face is badly worn.

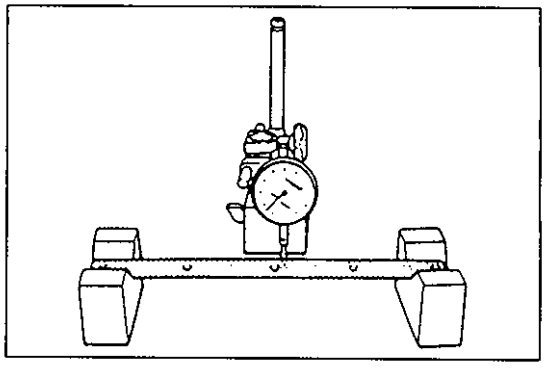

Rocker Arm Shaft Runout

Using "V" blocks and dial gauge, check runout. If runout exceeds its limit, replace rocker arm shaft.

Runout limit: 0.20 mm (0.008 in.)

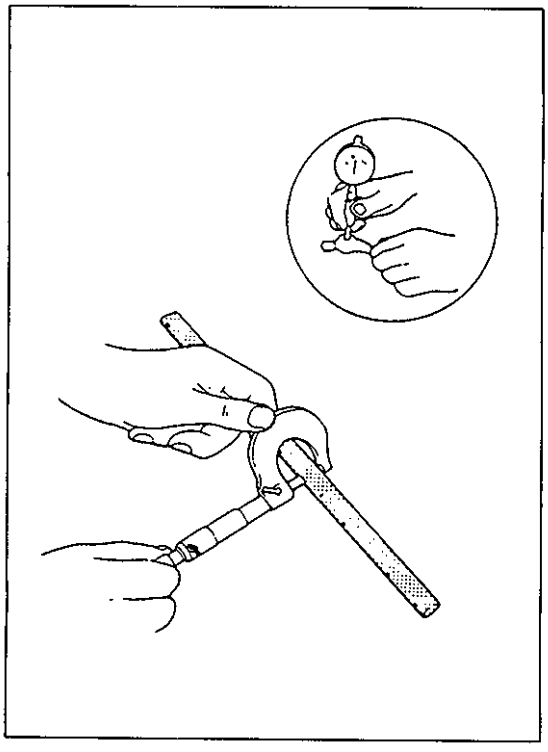

Rocker Arm-to-Rocker Arm Shaft Clearance

Using a micrometer and a bore gauge, measure rocker shaft dia. and rocker arm I.D.
Difference between two readings is arm-to-shaft clearance on which a limit is specified.
If limit is exceeded, replace shaft or arm, or both.

Item	Standard	Limit
Rocker arm I.D.	15.985 – 16.005 mm (0.629 – 0.630 in.)	——
Rocker arm shaft dia.	15.969 – 15.984 mm (0.6287 – 0.6293 in.)	——
Arm-to-shaft clearance	0.001 – 0.036 mm (0.0001 – 0.0014 in.)	0.09 mm (0.0035 in.)

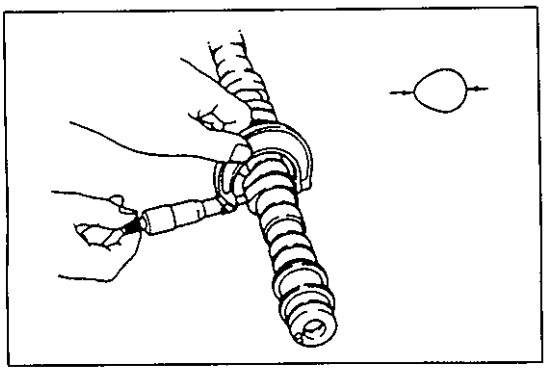

Cam Wear

Using a micrometer, measured height of cam. If measured height is below limit, replace camshaft.

Cam height	Standard	Limit
Intake cam	36.184 – 36.344 mm (1.4246 – 1.4308 in.)	36.084 mm (1.4206 in.)
Exhaust cam	35.900 – 36.060 mm (1.4134 – 1.4197 in.)	35.800 mm (1.4094 in.)

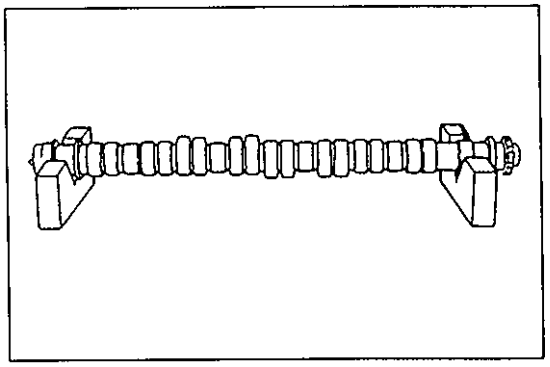

Camshaft Runout

Hold camshaft between two "V" blocks, and measure runout by using a dial gauge.

If runout exceeds the limit, replace camshaft.

Runout limit: 0.10 mm (0.0039 in.)

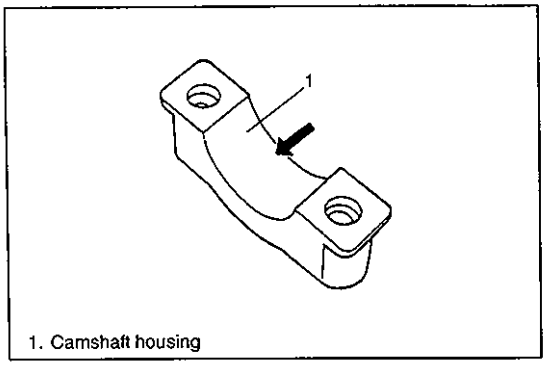

1. Camshaft housing

Camshaft Journal Wear

Check camshaft journals and camshaft housings for pitting, scratches, wear or damage.

If any malcondition is found, replace camshaft or cylinder head with housing. Never replace cylinder head without replacing housing.

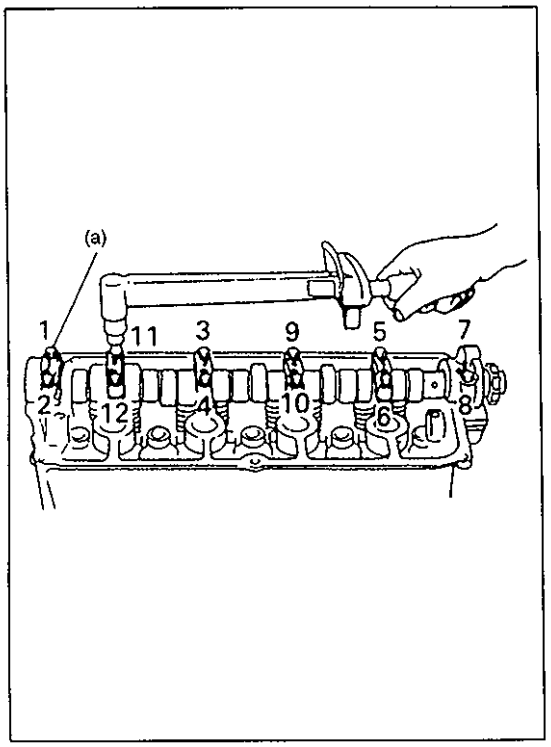

Check clearance by using gaging plastic.

The procedure is as follows.

1) Clean housing and camshaft journals.
2) Install camshaft to cylinder head.
3) Place a piece of gaging plastic the full width of journal of camshaft (parallel to camshaft).
4) Install camshaft housing, referring to page 6A-32.
5) Tighten camshaft housing bolts in such order as indicated in figure a little at a time till they are tightened to specified torque.

Tightening Torque
(a): 10 N·m (1.0kg-m, 7.5 lb-ft)

NOTE:
Do not rotate camshaft while gaging plastic is installed.

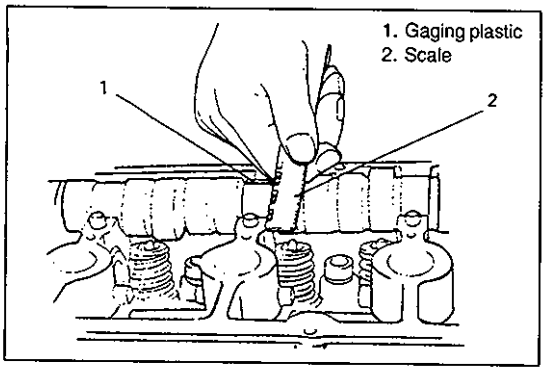

6) Remove housing and using scale on gaging plastic envelope, measure gaging plastic width at its widest point.

	Standard	Limit
Journal clearance	0.040 – 0.082 mm (0.0016 – 0.0032 in.)	0.12 mm (0.0047 in.)

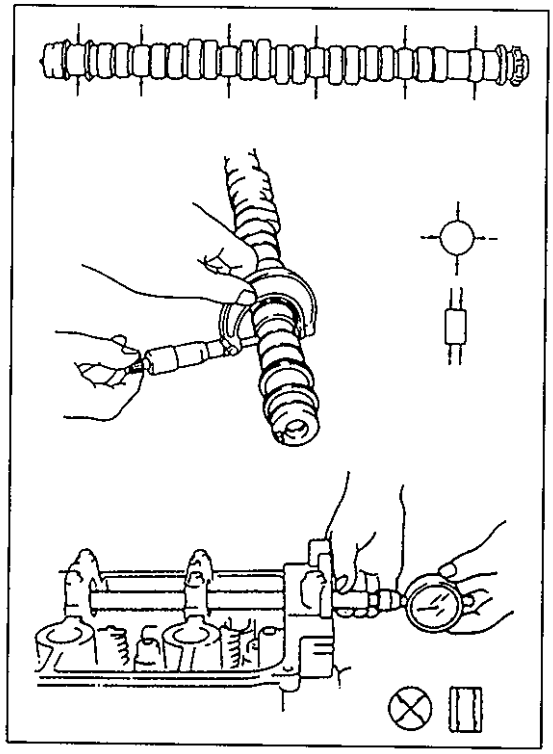

If measured camshaft journal clearance exceeds limit, measure journal (housing) bore and outside diameter of camshaft journal. Replace camshaft or cylinder head assembly whichever the difference from specification is greater.

Item	Standard
Camshaft Journal bore dia.	28.000 – 28.021 mm (1.1024 – 1.1031 in.)
Camshaft journal O.D.	27.939 – 27.960 mm (1.1000 – 1.1008 in.)

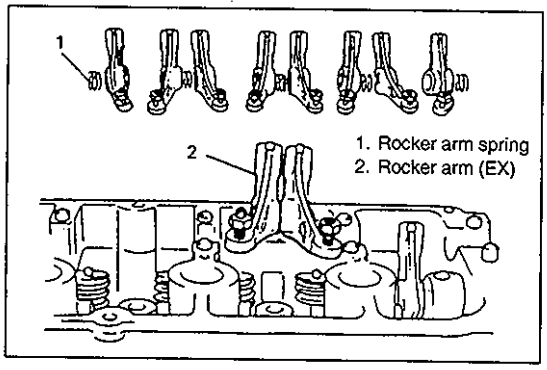

INSTALLATION

1) Apply engine oil to rocker arm shaft and rocker arms.
2) Install rocker arm shaft, rocker arm (exhaust side) and rocker arm spring.

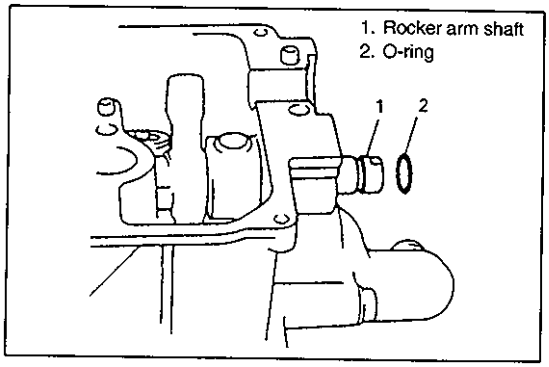

3) Check O-ring for damage or deterioration. With O-ring groove in rocker arm shaft exposed to transmission side once, install O-ring to rocker arm shaft.

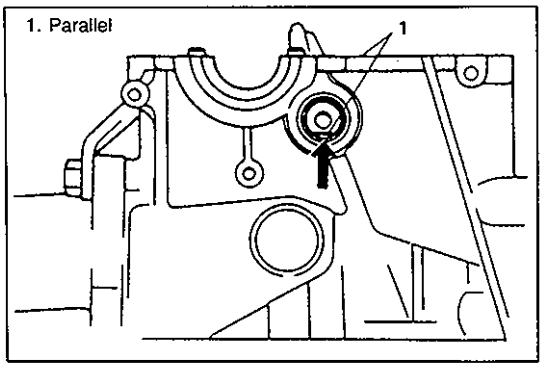

4) Set rocker arm shaft so that its cut part faces down and becomes in parallel with head cover mating surface.

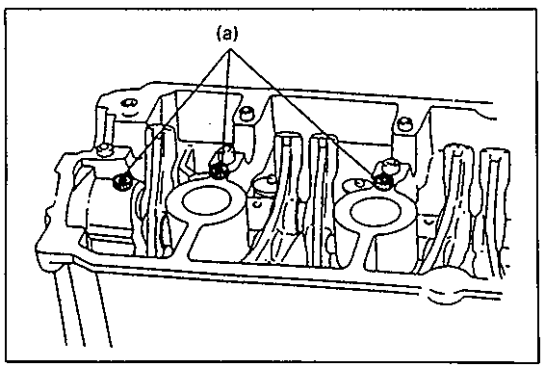

5) Install rocker arm shaft bolts and tighten them to specified torque.

Tightening Torque
(a): 10 N·m (1.0 kg-m, 7.5 lb-ft)

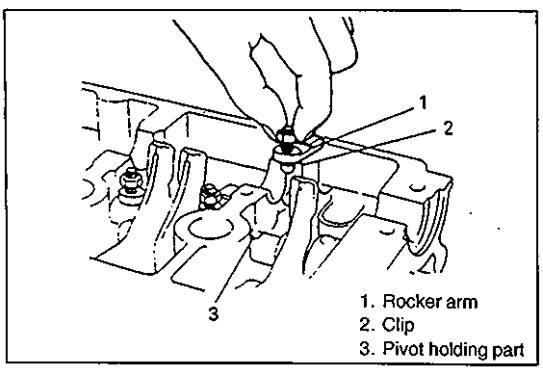

6) Fill small amount of engine oil into arm pivot holding part of rocker arm shaft. Install rocker arm (intake side) with clips to rocker arm shaft.

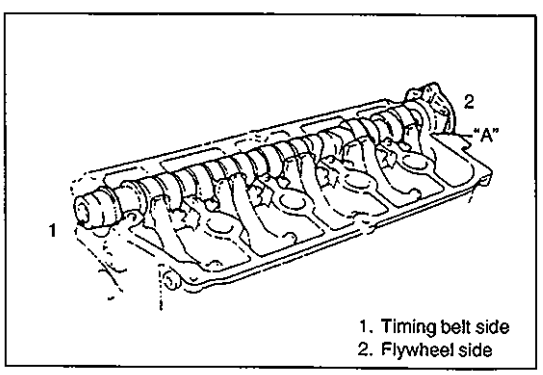

7) Apply engine oil to cams and journals on camshaft and put camshaft on cylinder head. Install camshaft housing to camshaft and cylinder head.
- Apply engine oil to sliding surface of each housing against camshaft journal.
- Apply sealant to mating surface of No.6 housing which will mate with cylinder head.

"A" Sealant: 99000-31110

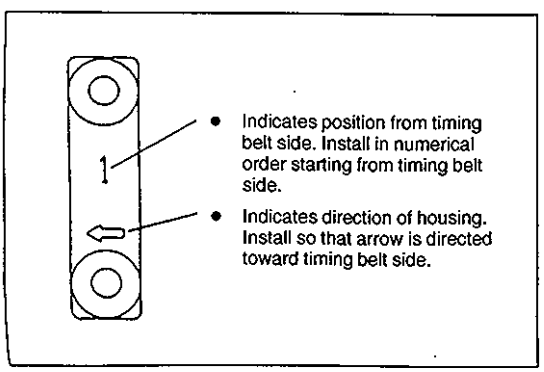

- Embossed marks are provided on each camshaft housing, indicating position and direction for installation.
  Install housing as indicated by these marks.
- As camshaft housing No. 1 retains camshaft in proper position as to thrust direction, make sure to first fit No. 1 housing to No. 1 journal of camshaft securely.

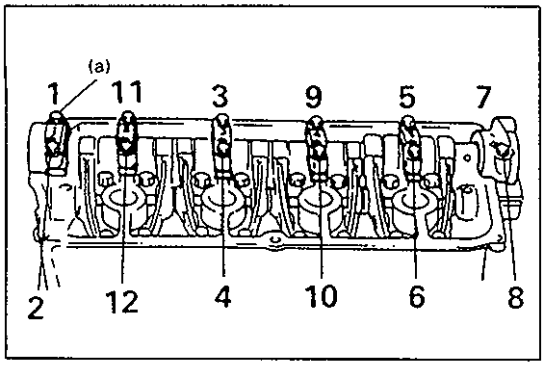

- After applying engine oil to housing bolts, tighten them temporarily first. Then tighten them by following sequence as indicated in figure.
  Tighten a little at a time and evenly among bolts and repeat tightening sequence three to four times before they are tightened to specified torque.

  Tightening Torque
  (a): 10 N·m (1.0 kg-m, 7.5 lb-ft)

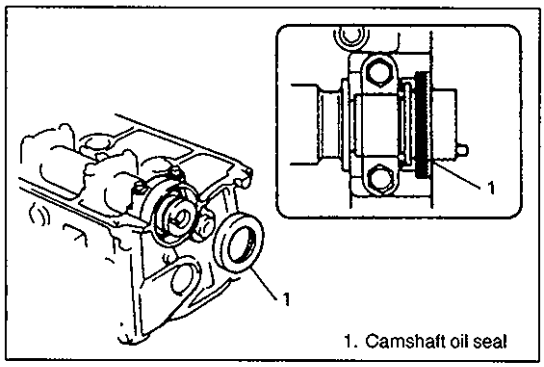

1. Camshaft oil seal

8) Install camshaft oil seal.
   After applying engine oil to oil seal lip, press-fit camshaft oil seal till oil seal surface becomes flush with housing surface.

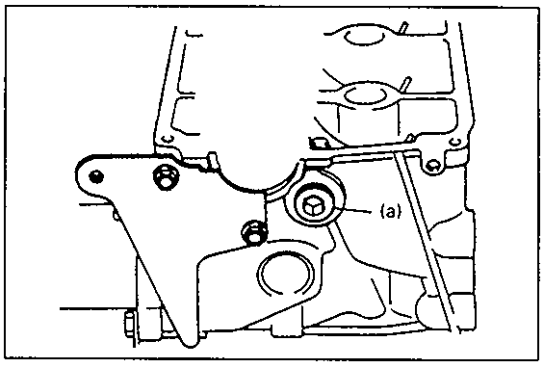

9) Install rocker arm shaft plug and timing belt inside cover. Then tighten rocker arm shaft plug to specified torque.

   Tightening Torque
   (a): 32 N·m (3.2 kg-m, 23.5 lb-ft)

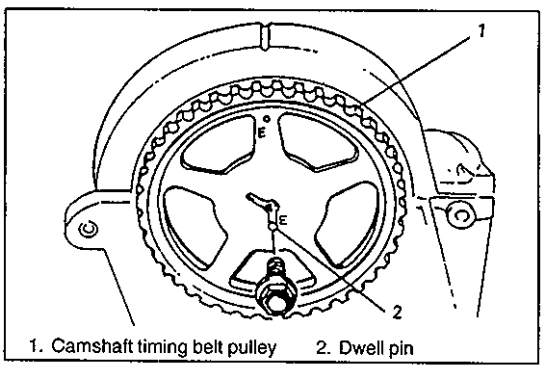

1. Camshaft timing belt pulley 2. Dwell pin

10) Install camshaft timing belt pulley to camshaft while fitting pin on camshaft into slot at "E" mark.

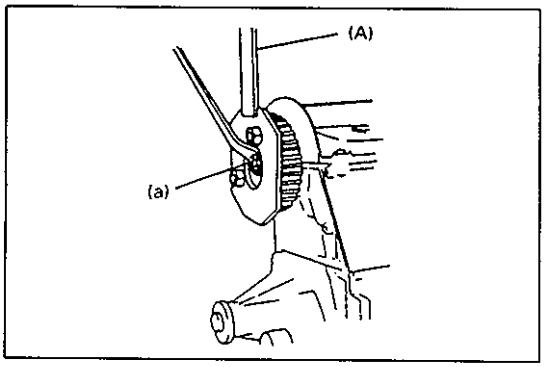

11) Using special tool, tighten pulley bolt to specified torque.

    Tightening Torque
    (a): 59 N·m (5.9 kg-m, 43.0 lb-ft)

    Special Tool
    (A): 09917-68220

12) Install belt tensioner, timing belt, outside cover, crankshaft pulley and water pump belt as previously outlined.

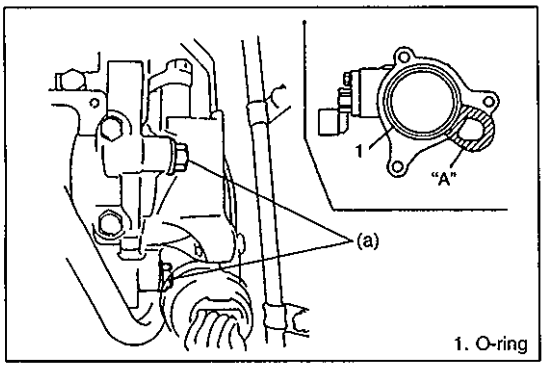

13) After applying sealant to part "A" as shown in figure at the left, install CMP sensor case to cylinder head and tighten its fixing bolts to specified torque.

"A" Sealant: 99000-31110

Tightening Torque
(a): 10 N·m (1.0 kg-m, 7.5 lb-ft)

Connect CMP sensor connector.

14) Adjust valve clearance as previously outlined.
15) Install cylinder head cover.
16) Install radiator and refill cooling system referring to "ENGINE COOLING" section.
17) Refill A/T fluid referring to "AUTOMATIC TRANSMISSION" section.
18) Connect negative cable at battery.
19) Upon completion of installation, verify that there is no coolant leakage or A/T fluid leakage (for A/T vehicle) at each connection.
20) Confirm that ignition timing is within specification referring to "IGNITION SYSTEM" section.

VALVES AND CYLINDER HEAD

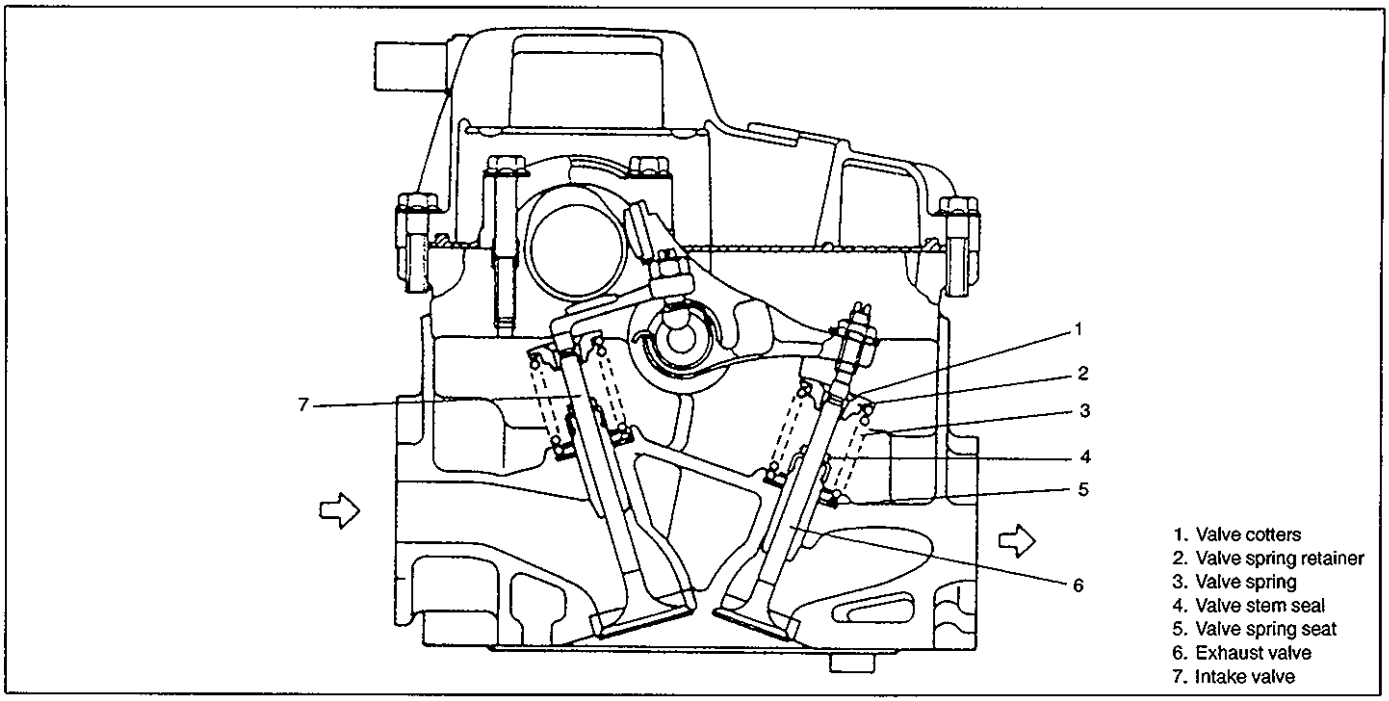

REMOVAL

1) Relieve fuel pressure according to fuel pressure relief procedure described in section 6.
2) Disconnect negative cable at battery.

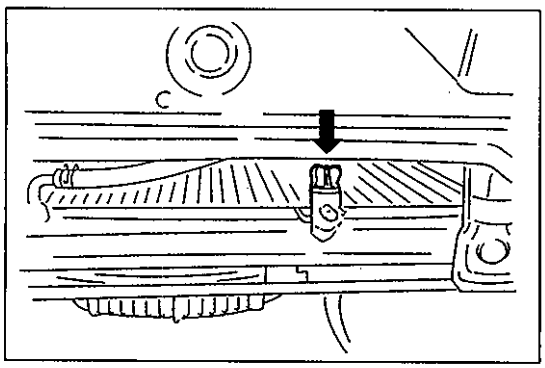

3) Drain cooling system.

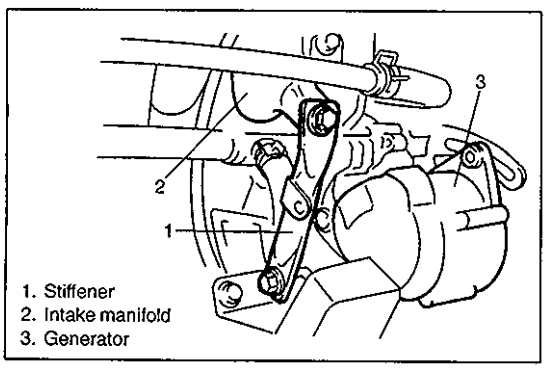

4) Remove intake manifold stiffener.

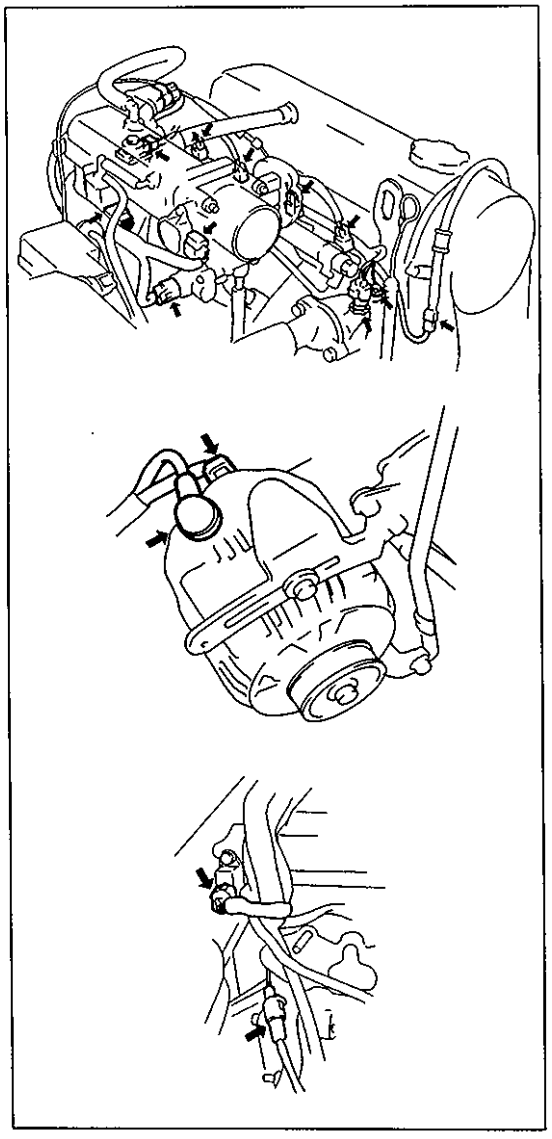

5) Remove air intake hose.
6) Disconnect following electric wires:
   - Ground wires from intake manifold
   - Camshaft position sensor
   - EGR valve (if equipped)
   - EVAP canister purge valve
   - Engine coolant temp. sensor
   - Throttle position sensor
   - Idle air control valve
   - Fuel injector wires at the connector
   - Generator
   - Ground cable from cylinder block
   - Heated oxygen sensor
   - Engine oil pressure switch

   and then release wire harnesses from clamps.

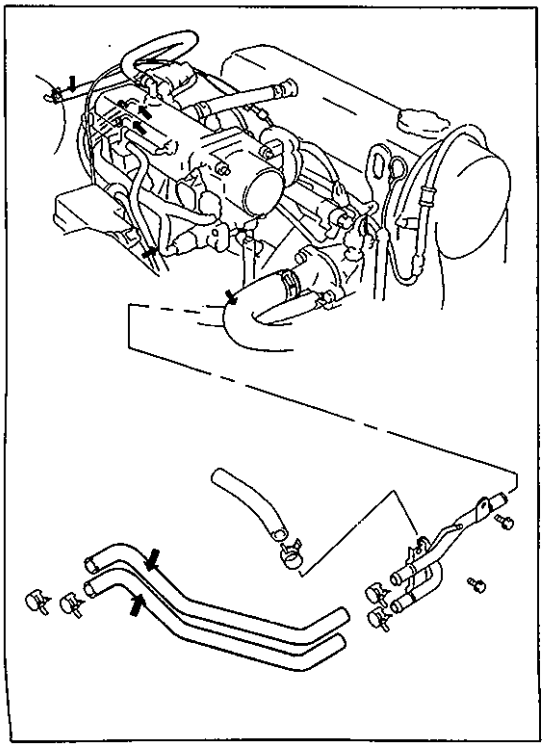

7) Disconnect following hoses:
   - Canister purge hose from EVAP canister purge valve
   - Radiator outlet hose from inlet pipe
   - Brake booster hose from intake manifold
   - Heater inlet and outlet hose from pipe
   - Fuel feed hose and return hose from each pipe
   - A/T fluid hose clamp from bracket
8) Disconnect accelerator cable from throttle body and each clamp.

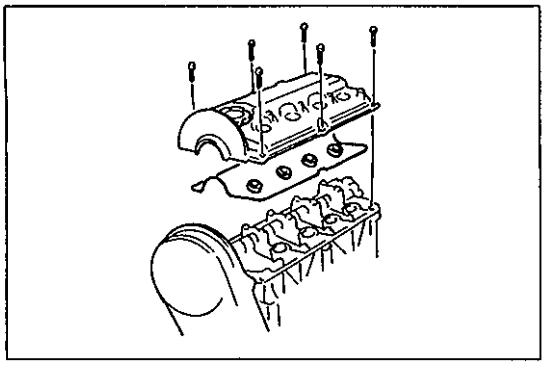

9) Remove cylinder head cover as previously outlined. Loosen all valve lash adjusting screws fully.

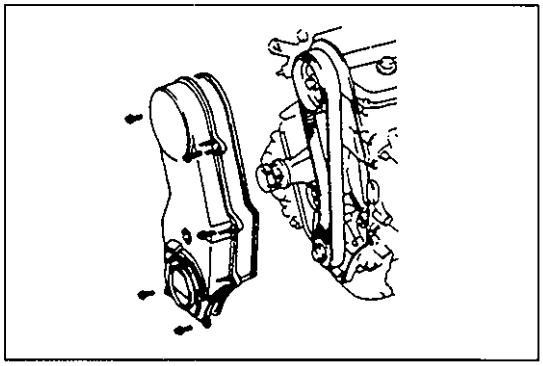

10) Remove timing belt and camshaft as previously outlined.
11) Remove generator adjust arm from intake manifold.
12) Remove air conditioning compressor adjust arm from cylinder head. (if equipped)

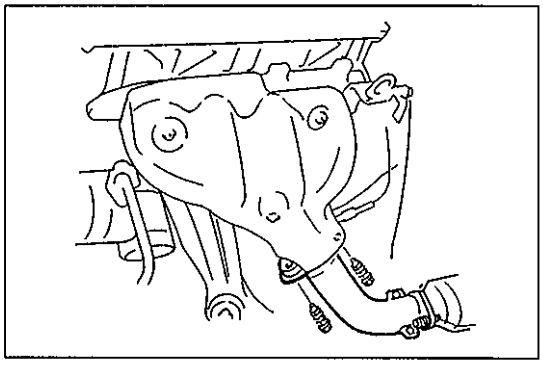

13) Disconnect exhaust pipe from exhaust manifold.

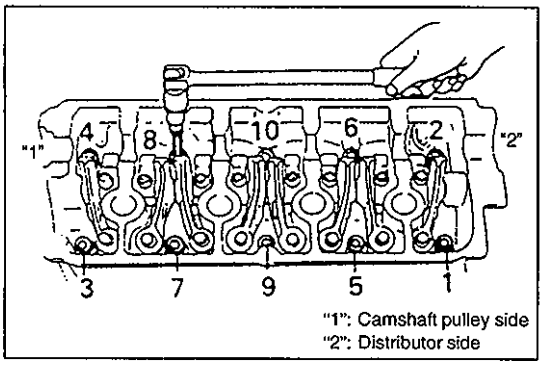

14) Loosen cylinder head bolts in such order as indicated in figure and remove them.
15) Check all around cylinder head for any other parts required to be removed or disconnected and remove or disconnect whatever necessary.

16) Remove cylinder head with intake manifold and exhaust manifold, using lifting device.

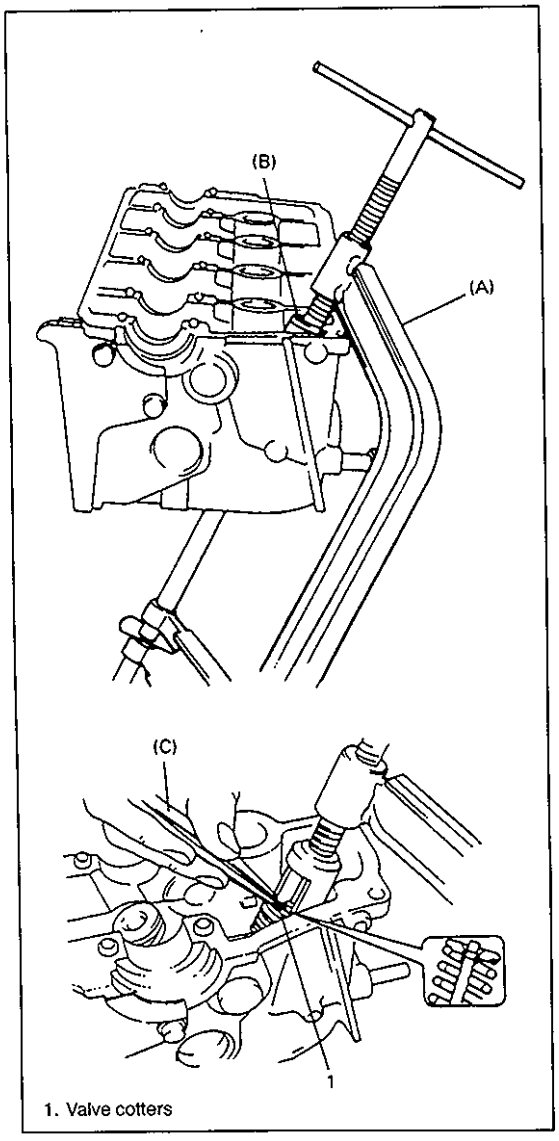

1. Valve cotters

DISASSEMBLY

1) For ease in servicing cylinder head, remove intake manifold with throttle body and exhaust manifold from cylinder head.
2) Remove intake rocker arm with clip from rocker arm shaft, remove rocker arm shaft bolts and remove exhaust rocker arms and springs by pulling its shaft out to transmission side.
3) Using special tool (Valve lifter), compress valve springs and then remove valve cotters by using special tool (Forceps) as shown.

Special Tool
(A): 09916-14510
(B): 09916-14910
(C): 09916-84511

4) Release special tool, and remove spring retainer and valve spring.
5) Remove valve from combustion chamber side.

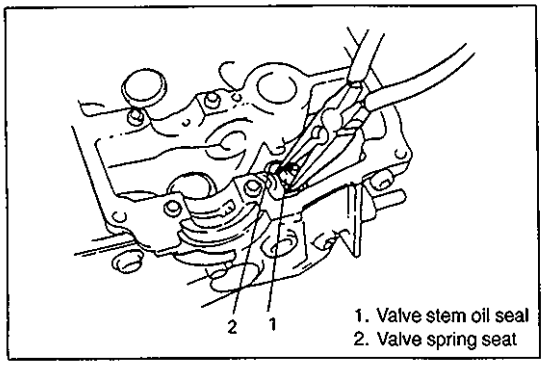

1. Valve stem oil seal
2. Valve spring seat

6) Remove valve stem oil seal from valve guide, and then valve spring seat.

NOTE:
Do not reuse oil seal once disassembled. Be sure to use new oil seal when assembling.

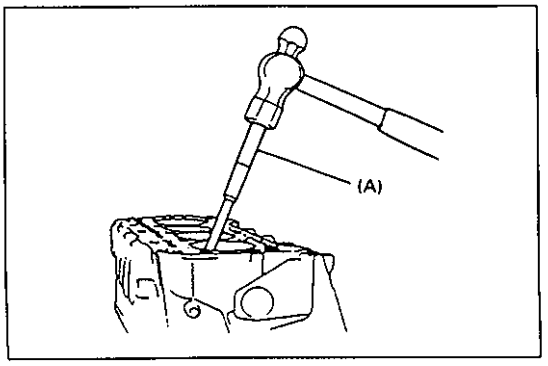

7) Using special tool (Valve guide remover), drive valve guide out from combustion chamber side to valve spring side.

Special Tool
(A): 09916-44910

NOTE:
Do not reuse valve guide once disassembled. Be sure to use new valve guide (Oversize) when assembling.

8) Place disassembled parts except valve stem seal and valve guide in order, so that they can be installed in their original position.

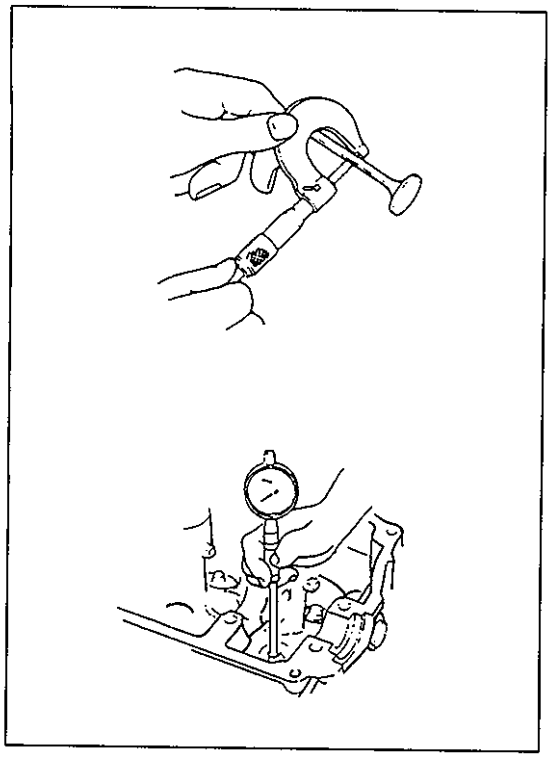

INSPECTION

Valve Guides

Using a micrometer and bore gauge, take diameter readings on valve stems and guides to check stem-to-guide clearance.
Be sure to take reading at more than one place along the length of each stem and guide.
If clearance exceeds limit, replace valve and valve guide.

Item		Standard	Limit
Valve stem diameter	In	5.465 – 5.480 mm (0.2152 – 0.2157 in.)	—
	Ex	5.440 – 5.455 mm (0.2142 – 0.2148 in.)	—
Valve guide I.D.	In	5.500 – 5.512 mm (0.2166 – 0.2170 in.)	—
	Ex		
Stem-to-guide clearance	In	0.020 – 0.047 mm (0.0008 – 0.0018 in.)	0.07 mm (0.0027 in.)
	Ex	0.045 – 0.072 mm (0.0018 – 0.0028 in.)	0.09 mm (0.0035 in.)

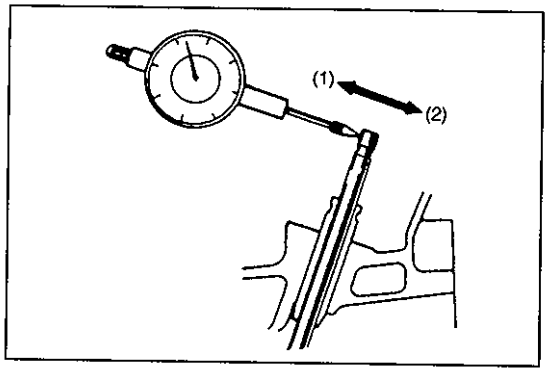

If bore gauge is not available, check end deflection of valve stem with a dial gauge instead.
Move stem end in directions (1) and (2) to measure end deflection.
If deflection exceeds its limit, replace valve stem and valve guide.

Valve stem end deflection limit	In	0.14 mm (0.005 in.)
	Ex	0.18 mm (0.007 in.)

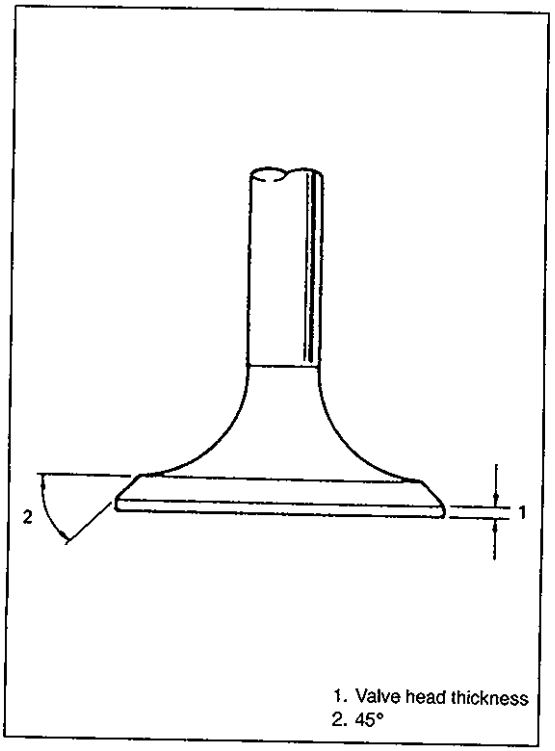

1. Valve head thickness
2. 45°

Valves

- Remove all carbon from valves.
- Inspect each valve for wear, burn or distortion at its face and stem and, as necessary, replace it.
- Measure thickness of valve head. If measured thickness exceeds limit, replace valve.

Valve head thickness		
	Standard	Limit
IN	0.8 – 1.2 mm (0.03 – 0.047 in.)	0.6 mm (0.024 in.)
EX		0.7 mm (0.027 in.)

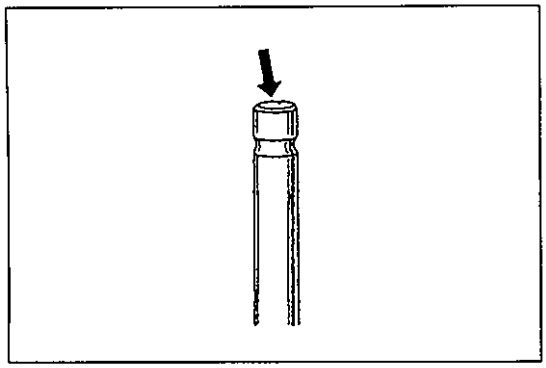

- Inspect valve stem end face for pitting and wear. If pitting or wear is found there, valve stem end may be resurfaced, but not so much as to grind off its chamfer. When it is worn so much that its chamfer is gone, replace valve.

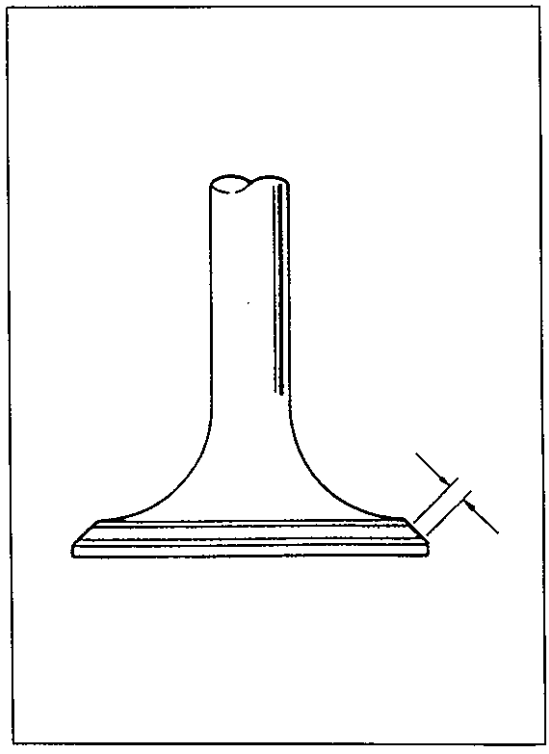

- Seating contact width:
  Create contact pattern on each valve in the usual manner, i.e., by giving uniform coat of marking compound to valve seat and by rotatingly tapping seat with valve head. Valve lapper (tool used in valve lapping) must be used.

  Pattern produced on seating face of valve must be a continuous ring without any break, and the width of pattern must be within specified range.

Standard seating width revealed by contact pattern on valve face	In	1.1 – 1.3 mm (0.0433 – 0.0512 in.)
	Ex	

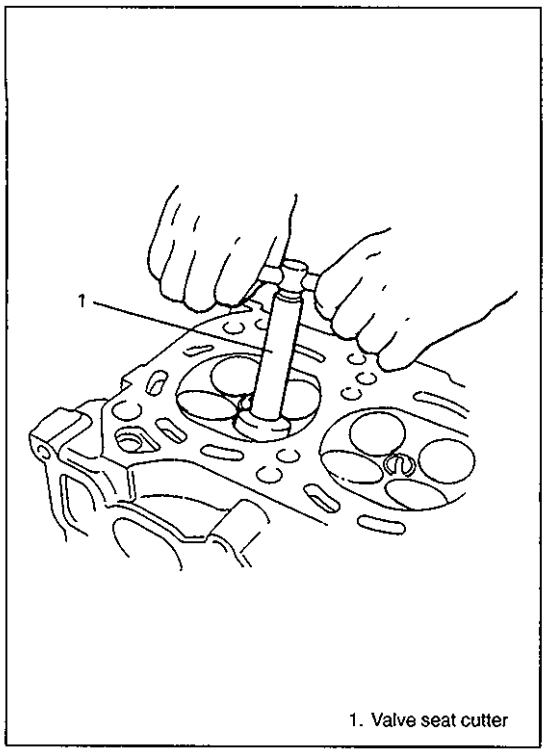

1. Valve seat cutter

- Valve seat repair:
  A valve seat not producing a uniform contact with its valve or showing width of seating contact that is out of specified range must be repaired by regrinding or by cutting and regrinding and finished by lapping.
  1) EXHAUST VALVE SEAT: Use valve seat cutters to make two cuts as illustrated in figure. Two cutters must be used: the first for making 15° angle, and the second for making 45° angle. The second cut must be made to produce desired seat width.

     Seat width for exhaust valve seat:
     1.1 – 1.3 mm (0.0433 – 0.0512 in.)

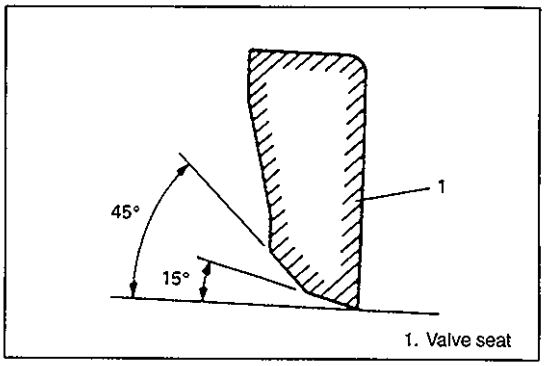

1. Valve seat

  2) INTAKE VALVE SEAT: Cutting sequence is the same as for exhaust valve seats.

     Seat width for intake valve seat:
     1.1 – 1.3 mm (0.0433 – 0.0512 in.)

  3) VALVE LAPPING: Lap valve on seat in two steps, first with coarse size lapping compound applied to face and the second with fine-size compound, each time using valve lapper according to usual lapping method.

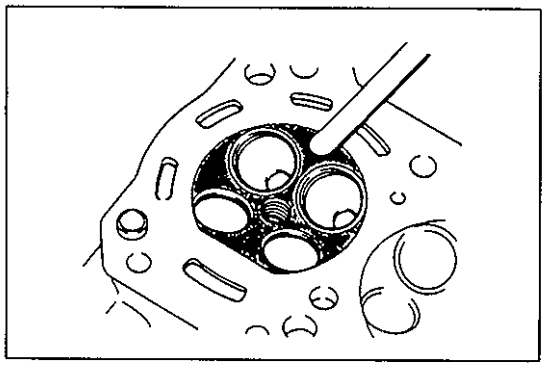

Cylinder Head

- Remove all carbon from combustion chambers.

  NOTE:
  Do not use any sharp-edged tool to scrape off carbon. Be careful not to scuff or nick metal surfaces when decarboning. The same applies to valves and valve seats, too.

- Check cylinder head for cracks in intake and exhaust ports, combustion chambers, and head surface.

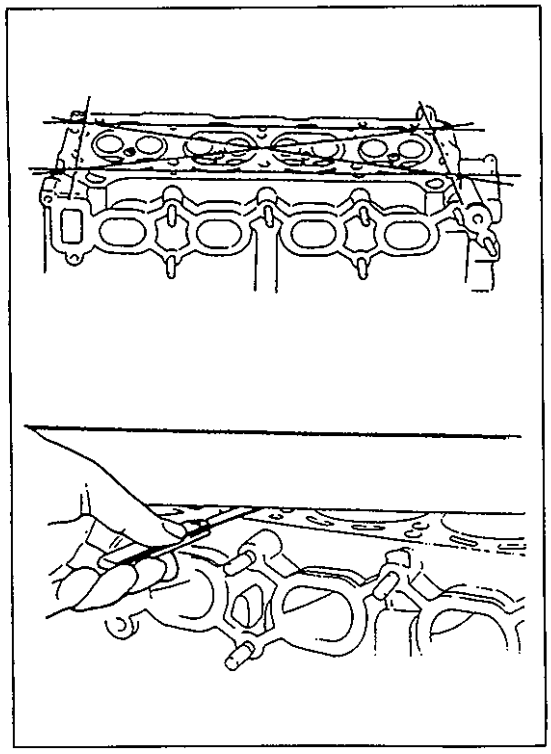

- Flatness of gasketed surface:
  Using a straightedge and thickness gauge, check surface at a total of 6 locations. If distortion limit, given below, is exceeded, correct gasketed surface with a surface plate and abrasive paper of about #400 (Waterproof silicon carbide abrasive paper): place paper on and over surface plate, and rub gasketed surface against paper to grind off high spots. Should this fail to reduce thickness gauge readings to within limit, replace cylinder head. Leakage of combustion gases from this gasketed joint is often due to warped gasketed surface: such leakage results in reduced power output.

  Limit of distortion: 0.05 mm (0.002 in.)

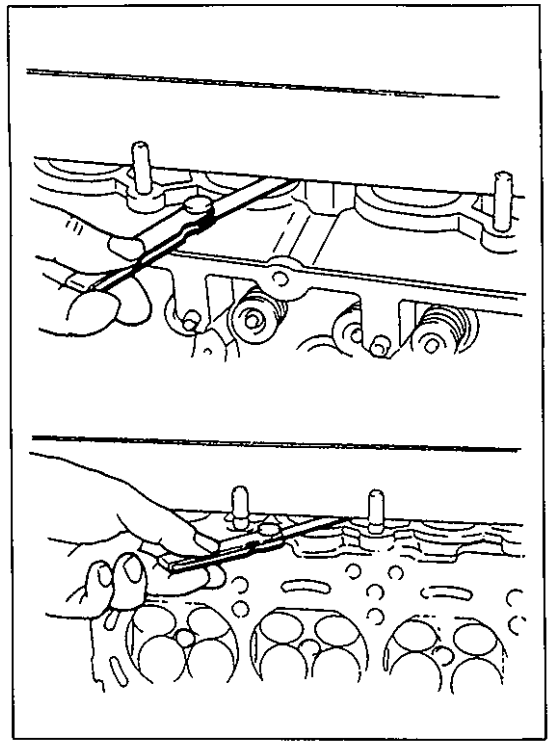

- Distortion of manifold seating faces:
  Check seating faces of cylinder head for manifolds, using a straightedge and thickness gauge, in order to determine whether these faces should be corrected or cylinder head replaced.

  Limit of distortion: 0.10 mm (0.004 in.)

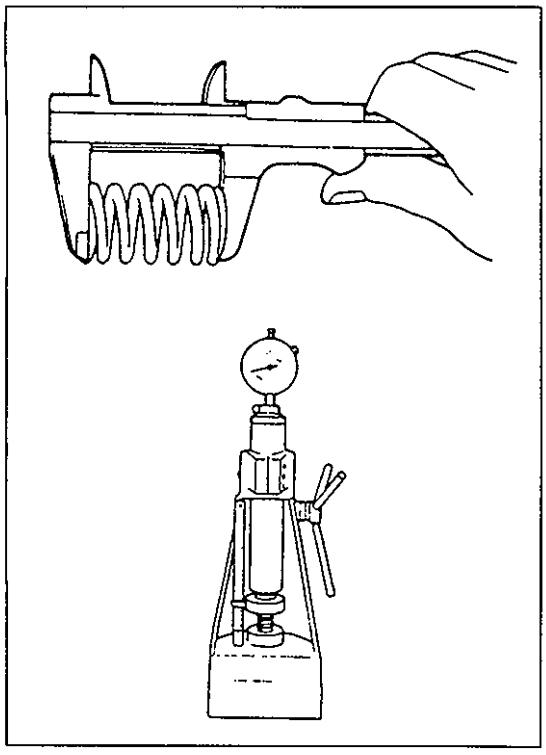

Valve Springs

- Referring to data given below, check to be sure that each spring is in sound condition, free of any evidence of breakage or weakening. Remember, weakened valve springs can cause chatter, not to mention possibility of reducing power output due to gas leakage caused by decreased seating pressure.

Item	Standard	Limit
Valve spring free length	36.83 mm (1.4500 in.)	35.67 mm (1.4043 in.)
Valve spring preload	10.7 – 12.5 kg for 31.5 mm (23.6 – 27.5 lb/1.24 in.)	9.3 kg for 31.5 mm (20.5 lb/1.24 in.)

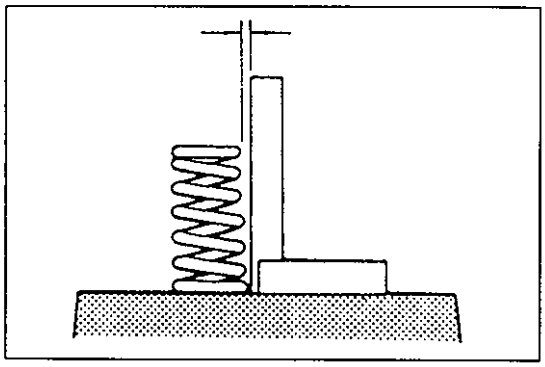

- Spring squareness:
  Use a square and surface plate to check each spring for squareness in terms of clearance between end of valve spring and square. Valve springs found to exhibit a larger clearance than limit given below must be replaced.

  Valve spring squareness limit: 2.0 mm (0.079 in.)

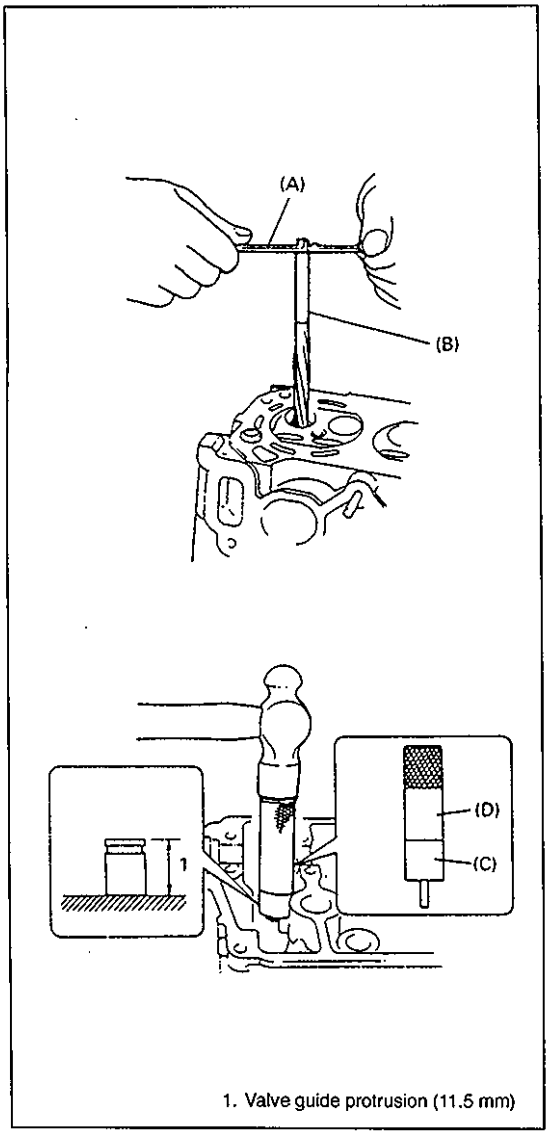

1. Valve guide protrusion (11.5 mm)

ASSEMBLY

1) Before installing valve guide into cylinder head, ream guide hole with special tool (11 mm reamer) so remove burrs and make it truly round.

Special Tool
(A): 09916-34542
(B): 09916-38210

2) Install valve guide to cylinder head.
Heat cylinder head uniformly at a temperature of 80 to 100°C (176 to 212°F) so that head will not be distorted, and drive new valve guide into hole with special tools. Drive in new valve guide until special tool (Valve guide installer) contacts cylinder head. After installing, make sure that valve guide protrudes by 11.5 mm (0.45 in.) from cylinder head.

Special Tool
(C): 09916-56011
(D): 09916-58210

NOTE:
- **Do not reuse valve guide once disassembled. Install new valve guide (Oversize).**
- **Intake and exhaust valve guides are identical.**

Valve guide oversize: 0.03 mm (0.0012 in.)
Valve guide protrusion (In and Ex): 11.5 mm (0.45 in.)

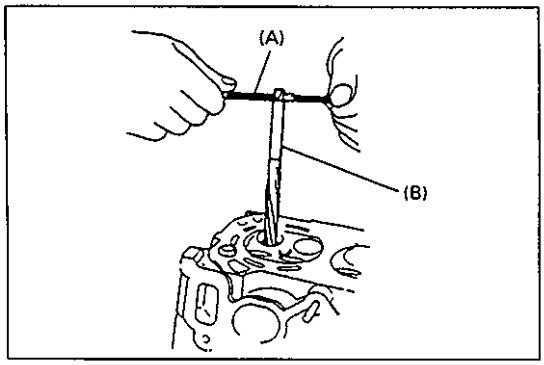

3) Ream valve guide bore with special tool (5.5 mm reamer). After reaming, clean bore.

Special Tool
(A): 09916-34542
(B): 09916-34550

4) Install valve spring seat to cylinder head.

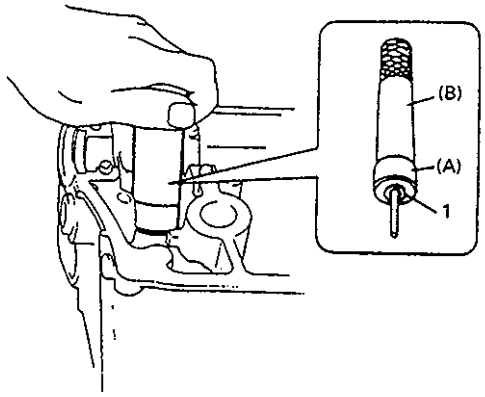

1. Valve stem seal

5) Install new valve stem seal to valve guide.
After applying engine oil to seal and spindle of special tool (Valve guide installer handle), fit oil seal to spindle, and then install seal to valve guide by pushing special tool by hand.
After installing, check to be sure that seal is properly fixed to valve guide.

Special Tool
(A): 09917-98221
(B): 09916-58210

NOTE:
- **Do not reuse seal once disassembled. Be sure to install new seal.**
- **When installing, never tap or hit special tool with a hammer or else. Install seal to guide only by pushing special tool by hand. Tapping or hitting special tool may cause damage to seal.**

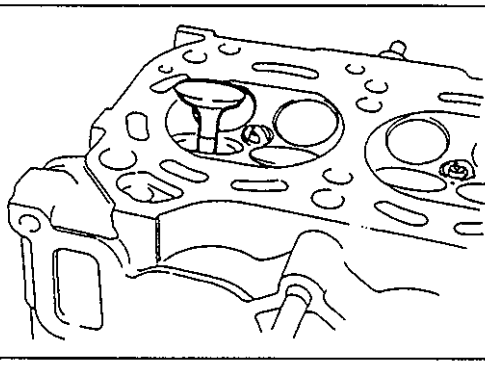

6) Install valve to valve guide.
Before installing valve to valve guide, apply engine oil to stem seal, valve guide bore, and valve stem.

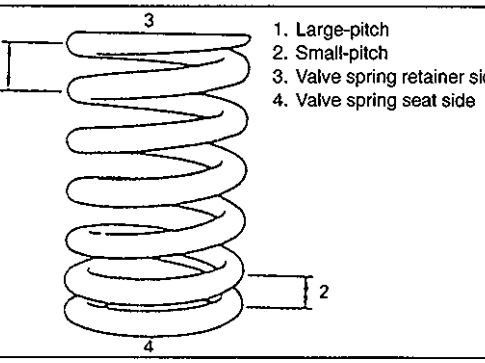

1. Large-pitch
2. Small-pitch
3. Valve spring retainer side
4. Valve spring seat side

7) Install valve spring and spring retainer.
Each valve spring has top end (large-pitch end) and bottom end (small-pitch end). Be sure to position spring in place with its bottom end (small-pitch end) facing the bottom (valve spring seat side).

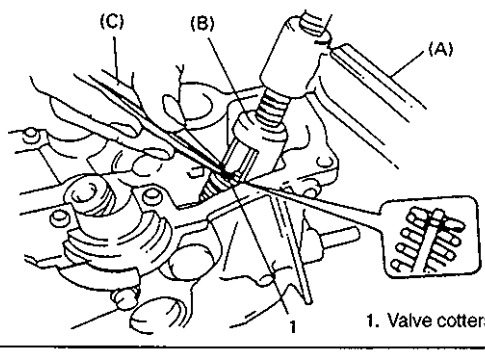

1. Valve cotters

8) Using special tool (Valve lifter), compress valve spring and fit two valve cotters into groove in valve stem.

Special Tool
(A): 09916-14510
(B): 09916-14910
(C): 09916-84511

9) Install rocker arms, springs and rocker arm shaft as previously outlined.
10) Install intake manifold and exhaust manifold.

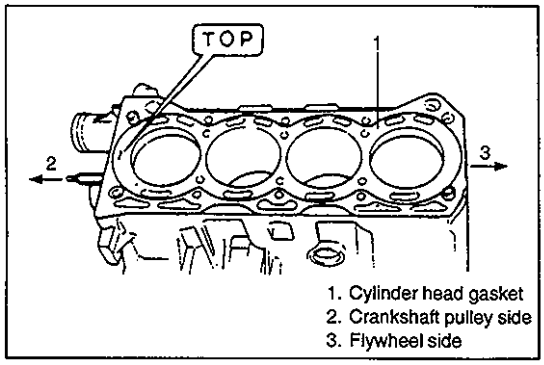

1. Cylinder head gasket
2. Crankshaft pulley side
3. Flywheel side

INSTALLATION

1) Remove old gasket and oil on mating surfaces and install new head gasket as shown in figure, that is, "TOP" mark provided on gasket comes to crankshaft pulley side, facing up (toward cylinder head side).

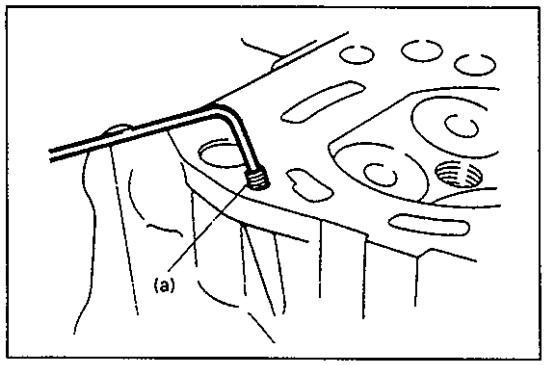

2) Check to make sure that oil jet (venturi plug) is installed and if it is, that it is not clogged.
When installing it, be sure to tighten to specified torque.

Tightening Torque
(a): 5 N·m (0.5 kg-m, 4.0 lb-ft)

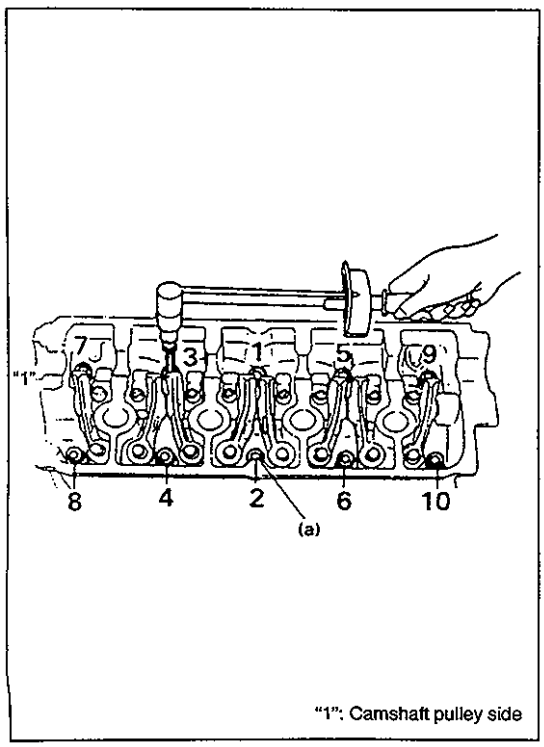

"1": Camshaft pulley side

3) Apply engine oil to cylinder head bolts and tighten them gradually as follows.
   (1) Tighten all bolts to 35 N·m (3.5 kg-m, 25.0 lb-ft) according to numerical order in figure.
   (2) In the same manner as in (1), tighten them to 55 N·m (5.5 kg-m, 40.0 lb-ft).
   (3) In the same manner as in (1) again, tighten them to specified torque.

Tightening Torque
(a): 68 N·m (6.8 kg-m, 49.5 lb-ft)

4) Reverse removal procedure for installation.
5) Adjust water pump drive belt tension, referring to "ENGINE COOLING" section.
6) Adjust power steering pump belt tension or A/C compressor belt tension, if equipped. Refer to section 0B.
7) Adjust intake and exhaust valve lashes as previously outlined.
8) Adjust accelerator cable play. Refer to section 6E.
9) Check to ensure that all removed parts are back in place. Reinstall any necessary parts which have not been reinstalled.
10) Refill cooling system referring to "ENGINE COOLING" section.
11) Connect negative cable at battery.
12) Verify that there is no fuel leakage, coolant leakage and exhaust gas leakage at each connection.
13) Confirm that ignition timing is within specification referring to "IGNITION SYSTEM" section.

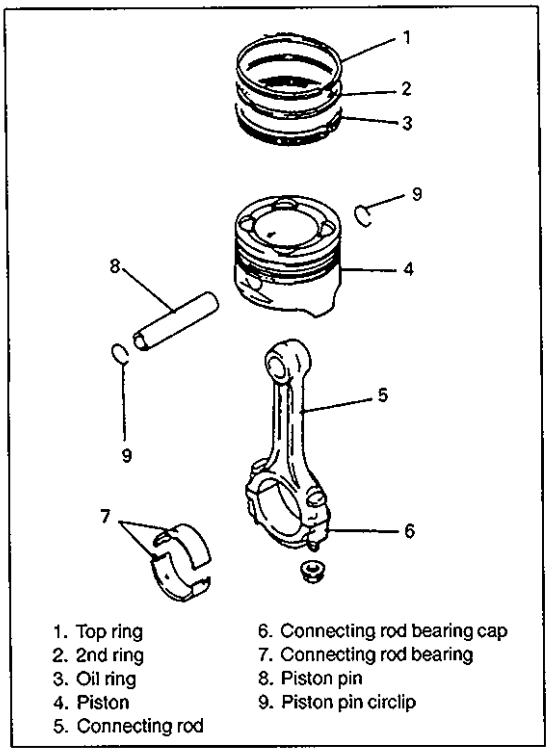

1. Top ring
2. 2nd ring
3. Oil ring
4. Piston
5. Connecting rod
6. Connecting rod bearing cap
7. Connecting rod bearing
8. Piston pin
9. Piston pin circlip

PISTON, PISTON RINGS, CONNECTING RODS AND CYLINDERS

REMOVAL

1) Remove cylinder head from cylinder block as previously outlined.
2) Drain engine oil.
3) Remove oil pan and oil pump strainer as previously outlined.
4) Mark cylinder number on all pistons, connecting rods and rod bearing caps, using silver pencil or quick drying paint.

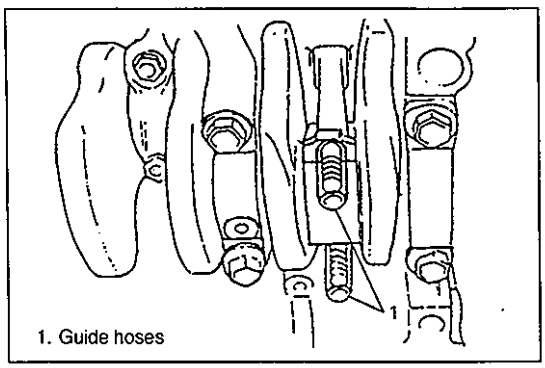

1. Guide hoses

5) Remove rod bearing caps.
6) Install guide hose over threads of rod bolts. This is to prevent damage to bearing journal and rod bolt threads when removing connecting rod.
7) Decarbon top of cylinder bore before removing piston from cylinder.
8) Push piston and connecting rod assembly out through the top of cylinder bore.

DISASSEMBLY

1) Using piston ring expander, remove two compression rings (Top and 2nd) and oil ring from piston.

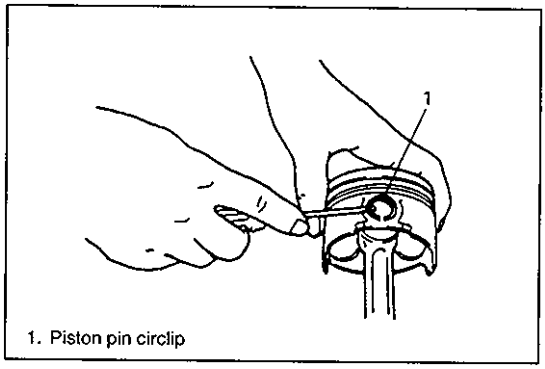

1. Piston pin circlip

2) Remove piston pin from connecting rod.
   - Ease out piston pin circlips, as shown.

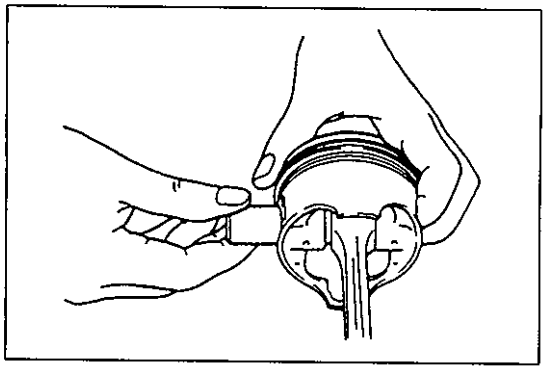

- Force piston pin out.

CLEANING

Clean carbon from piston head and ring grooves, using a suitable tool.

INSPECTION

Cylinders

- Inspect cylinder walls for scratches, roughness, or ridges which indicate excessive wear. If cylinder bore is very rough or deeply scratched, or ridged, rebore cylinder and use oversize piston.

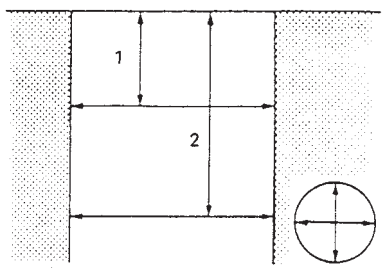

1. 50 mm (1.96 in.)
2. 95 mm (3.74 in.)

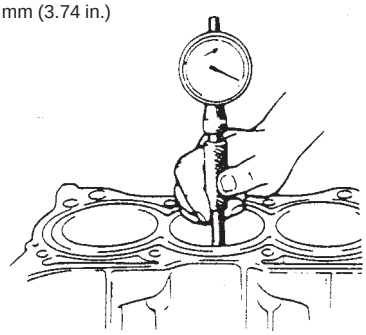

- Using a cylinder gauge, measure cylinder bore in thrust and axial directions at two positions as shown in figure.
  If any of following conditions is noted, rebore cylinder.
  1) Cylinder bore dia. exceeds limit.
  2) Difference of measurements at two positions exceeds taper limit.
  3) Difference between thrust and axial measurements exceeds out-of-round limit.

  Cylinder bore dia. limit: 74.15 mm (2.9193 in.)
  Taper and out-of-round limit: 0.10 mm (0.0039 in.)

  NOTE:
  If any one of four cylinders has to be rebored, rebore all four to the same next oversize. This is necessary for the sake of uniformity and balance.

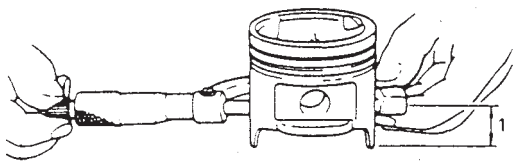

1. 23 mm (0.91 in.)

Pistons

- Inspect piston for faults, cracks or other damaged.
  Damaged or faulty piston should be replaced.
- Piston diameter:
  As indicated in figure, piston diameter should be measured at a position 23 mm (0.91 in.) from piston skirt end in the direction perpendicular to piston pin.

Piston diameter	Standard	73.970 – 73.990 mm (2.9122 – 2.9130 in.)
	Oversize: 0.25 mm (0.0098 in.)	74.220 – 74.230 mm (2.9220 – 2.9224 in.)
	0.50 mm (0.0196 in.)	74.470 – 74.480 mm (2.9319 – 2.9323 in.)

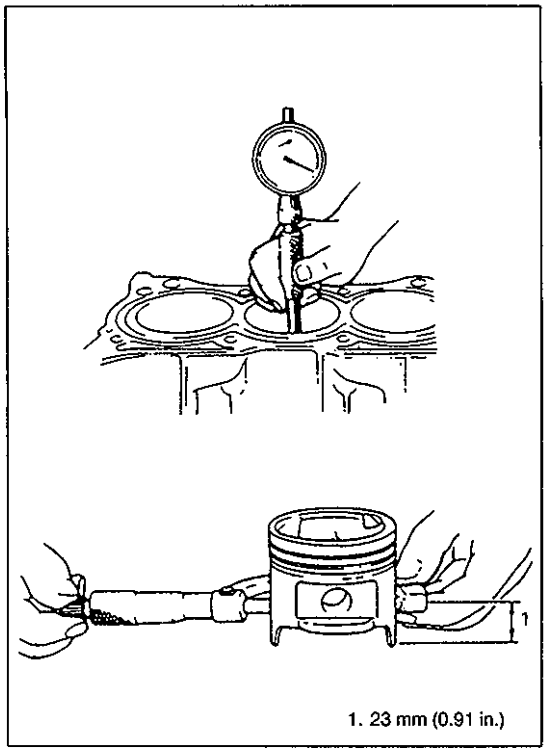

1. 23 mm (0.91 in.)

- Piston clearance:
  Measure cylinder bore diameter and piston diameter to find their difference which is piston clearance. Piston clearance should be within specification as given below. If it is out of specification, re-bore cylinder and use oversize piston.

  Piston clearance: 0.02 – 0.04 mm (0.0008 – 0.0015 in.)

  NOTE:
  Cylinder bore diameters used here are measured in thrust direction at two positions.

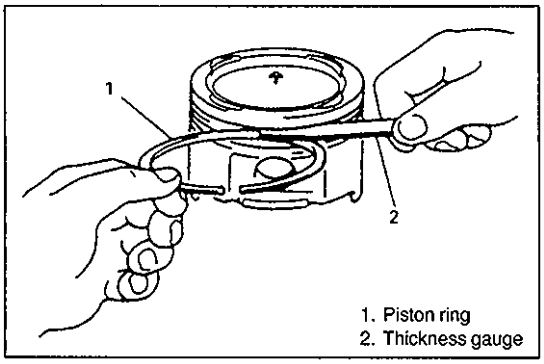

1. Piston ring
2. Thickness gauge

- Ring groove clearance:
  Before checking, piston grooves must be clean, dry and free of carbon.
  Fit new piston ring into piston groove, and measure clearance between ring and ring land by using thickness gauge.
  If clearance is out of specification, replace piston.

  Ring groove clearance:
  Top: 0.03 – 0.07 mm (0.0012 – 0.0027 in.)
  2nd: 0.02 – 0.06 mm (0.0008 – 0.0023 in.)

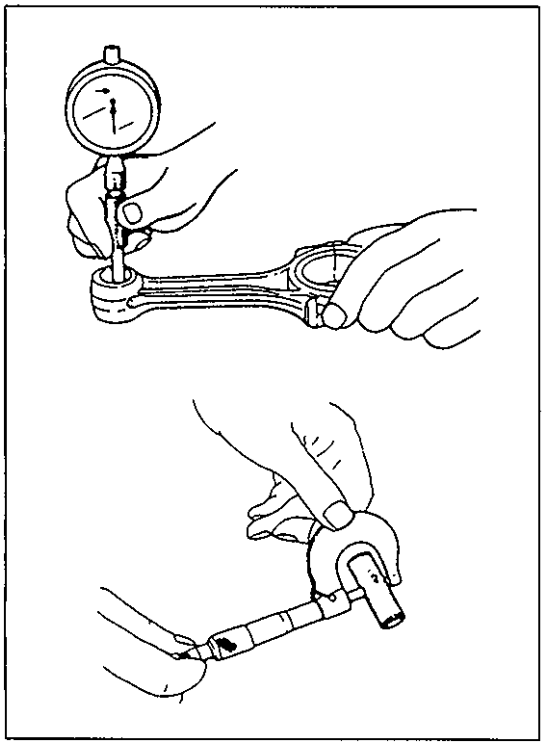

Piston Pin

- Check piston pin, connecting rod small end bore and piston bore for wear or damage, paying particular attention to condition of small end bore bush. If pin, connecting rod small end bore or piston bore is badly worn or damaged, replace pin, connecting rod or piston.
- Piston pin clearance:
  Check piston pin clearance in small end. Replace connecting rod if its small end is badly worn or damaged or if measured clearance exceeds limit.

Item	Standard	Limit
Piston clearance in small end	0.003 – 0.014 mm (0.0001 – 0.0006 in.)	0.05 mm (0.0020 in.)

Small-end bore:
19.003 – 19.011 mm (0.7482 – 0.7486 in.)

Piston pin dia.:
18.997 – 19.000 mm (0.7479 – 0.7480 in.)

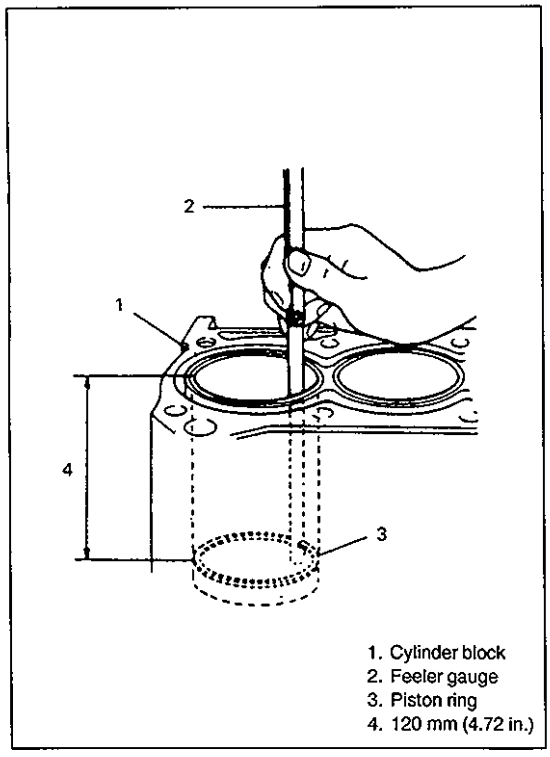

1. Cylinder block
2. Feeler gauge
3. Piston ring
4. 120 mm (4.72 in.)

Piston Rings

To measure end gap, insert piston ring into cylinder bore and then measure the gap by using thickness gauge.
If measured gap is out of specification, replace ring.

NOTE:
Decarbon and clean top of cylinder bore before inserting piston ring.

Item		Standard	Limit
Piston ring end gap	Top ring	0.2 – 0.35 mm (0.0079 – 0.0137 in.)	0.7 mm (0.0275 in.)
	2nd ring	0.35 – 0.50 mm (0.0138 – 0.0197 in.)	0.7 mm (0.0275 in.)
	Oil ring	0.1 – 0.4 mm (0.0039 – 0.0157 in.)	1.7 mm (0.0669 in.)

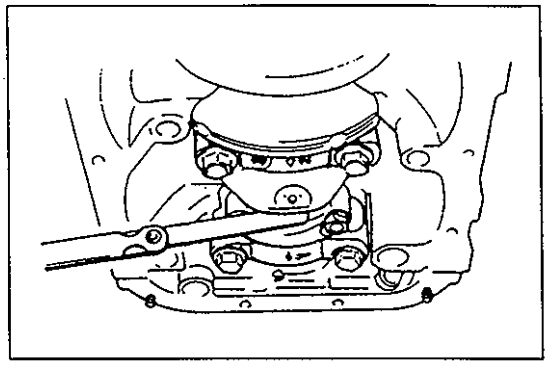

Connecting Rod

- Big-end side clearance:
  Check big-end of connecting rod for side clearance, with rod fitted and connected to its crank pin in the normal manner. If measured clearance is found to exceed its limit, replace connecting rod.

Item	Standard	Limit
Big-end side clearance	0.10 – 0.25 mm (0.0039 – 0.0098 in.)	0.35 mm (0.0137 in.)

- Connecting rod alignment:
  Mount connecting rod on aligner to check it for bow and twist and, if limit is exceeded, replace it.

  Limit on bow: 0.05 mm (0.0020 in.)
  Limit on twist: 0.10 mm (0.0039 in.)

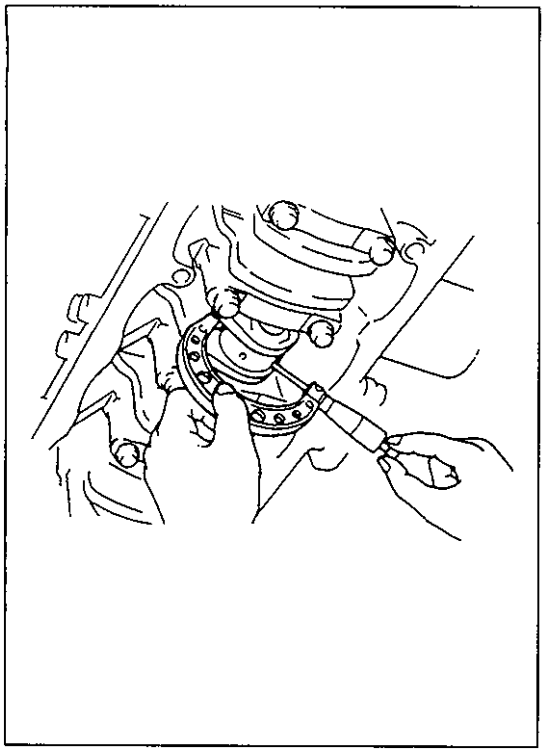

Crank Pin and Connecting Rod Bearings

- Inspect crank pin for uneven wear or damage. Measure crank pin for out-of-round or taper with a micrometer. If crank pin is damaged, or out-of-round or taper is out of limit, replace crankshaft or regrind crank pin referring to following step 6).

Connecting rod bearing size	Crank pin diameter
Standard	41.982 – 42.000 mm (1.6528 – 1.6535 in.)
0.25 mm (0.0098 in.) undersize	41.732 – 41.750 mm (1.6430 – 1.6437 in.)

Out-of-round and taper limit: 0.01 mm (0.0004 in.)

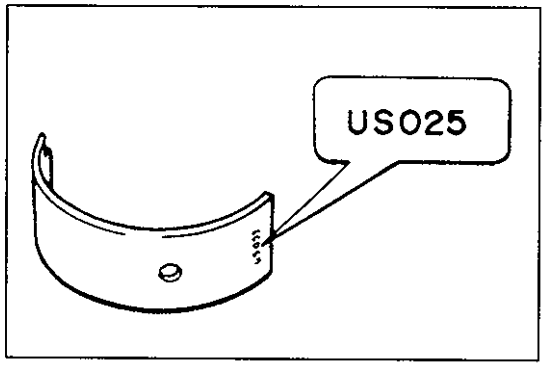

- Rod bearing:
  Inspect bearing shells for signs of fusion, pitting, burn or flaking and observe contact pattern. Bearing shells found in defective condition must be replaced.
  Two kinds of rod bearing are available; standard size bearing and 0.25 mm undersize bearing. To distinguish them, 0. 25 mm undersize bearing has the stamped number (US025) on its backside as indicated in figure, but standard size one has no number.

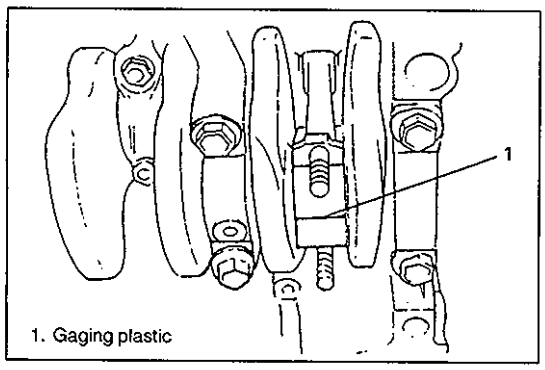

- Rod bearing clearance:
  1) Before checking bearing clearance, clean bearing and crank pin.
  2) Install bearing in connecting rod and bearing cap.
  3) Place a piece of gaging plastic to full width of crankpin as contacted by bearing (parallel to crankshaft), avoiding oil hole.

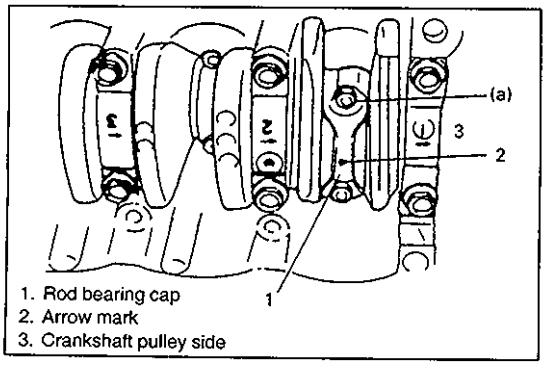

4) Install rod bearing cap to connecting rod.
   When installing cap, be sure to point arrow mark on cap to crankshaft pulley side, as shown in figure. After applying engine oil to rod bolts, tighten cap nuts to specified torque. DO NOT turn crankshaft with gaging plastic installed.

   Tightening Torque
   (a): 35 N·m (3.5 kg-m, 25.5 lb-ft)

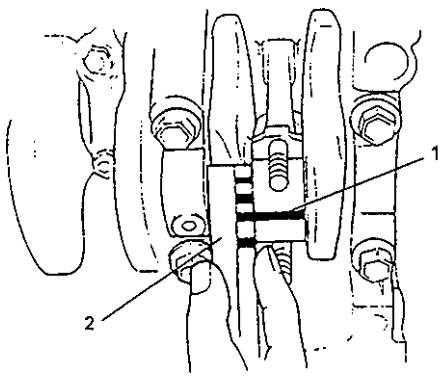

1. Gaging plastic
2. Scale

5) Remove cap and using a scale on gaging plastic envelope, measure gaging plastic width at the widest point (clearance). If clearance exceeds its limit, use a new standard size bearing and remeasure clearance.

Item	Standard	Limit
Bearing clearance	0.020 – 0.050 mm (0.0008 – 0.0019 in.)	0.080 mm (0.0031 in.)

6) If clearance can not be brought to within its limit even by using a new standard size bearing, replace crankshaft or regrind crankpin to undersize as follows.
   - Install 0.25 mm undersize bearing to connecting rod big end.
   - Measure bore diameter of connecting rod big end.
   - Regrind crankpin to following finished diameter.

Finished crankpin dia.	=	Measured big end bore dia. (including undersize bearing)	–	0.035 mm (0.0014 in.)

   - Confirm that bearing clearance is within above standard value.

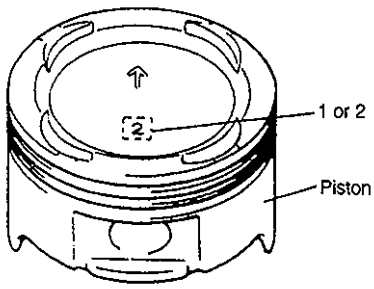

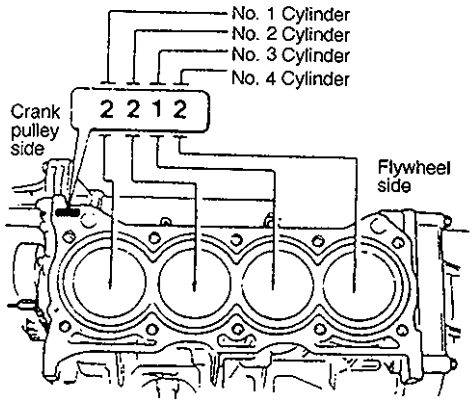

ASSEMBLY

NOTE:

Two sizes of piston are available as standard size spare part so as to ensure proper piston-to-cylinder clearance. When installing a standard size piston, make sure to match piston with cylinder as follows.

a) Each piston has stamped number 1 or 2 as shown. It represents outer diameter of piston.

b) There are also stamped numbers of 1 and 2 on the cylinder block as shown. The first number represents inner diameter of No.1 cylinder, the second number of No.2 cylinder, the third number of No.3 cylinder and the fourth number of No.4 cylinder.

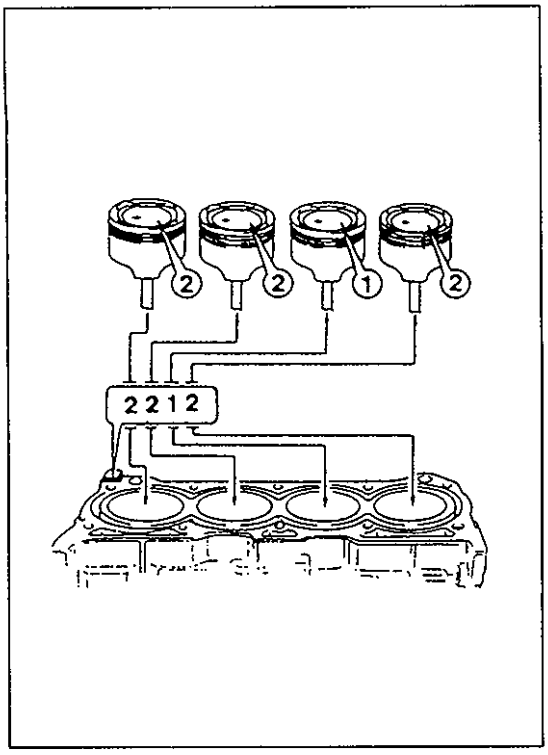

c) Stamped number on piston and that on cylinder block should correspond. That is, install number 2 stamped piston to cylinder which is identified with number 2 and a number 1 piston to cylinder with number 1.

Piston		Cylinder		Piston-to-cylinder clearance
Number at the top (mark)	Outer diameter	Number (mark)	Bore diameter	
1	73.98 – 73.99 mm (2.9126 – 2.9130 in.)	1	74.01 – 74.02 mm (2.9138 – 2.9141 in.)	0.02 – 0.04 mm (0.0008 – 0.0015 in.)
2	73.97 – 73.98 mm (2.9122 – 2.9126 in.)	2	74.00 – 74.01 mm (2.9134 – 2.9138 in.)	0.02 – 0.04 mm (0.0008 – 0.0015 in.)

Also, a letter A, B or C is stamped on piston head but ordinarily it is not necessary to discriminate each piston by this letter.

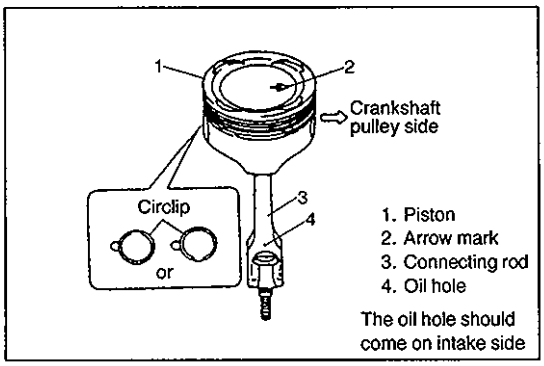

1) Install piston pin to piston and connecting rod:
After applying engine oil to piston pin and piston pin holes in piston and connecting rod, fit connecting rod to piston as shown in figure and insert piston pin to piston and connecting rod, and install piston pin circlips.

NOTE:
Circlip should be installed with its cut part facing either up or down as shown in figure.

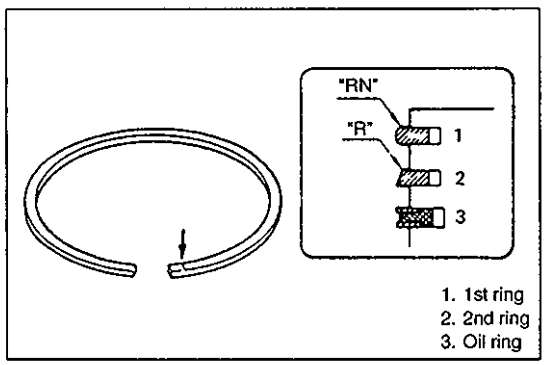

2) Install piston rings to piston:
- As indicated in figure at the left, 1st and 2nd rings have "RN", "T" or "R" mark respectively. When installing these piston rings to piston, direct marked side of each ring toward top of piston.
- 1st ring differs from 2nd ring in thickness, shape and color of surface contacting cylinder wall.
  Distinguish 1st ring from 2nd ring by referring to figure.
- When installing oil ring, install spacer first and then two rails.

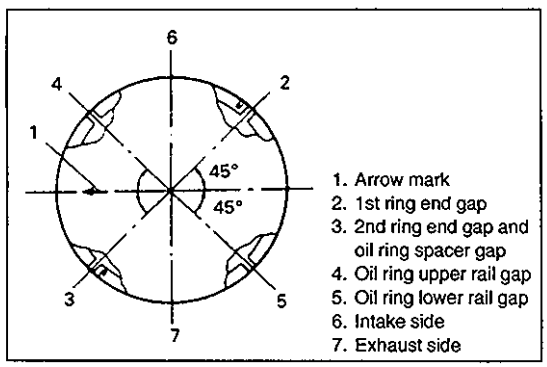

3) After installing three rings (1st, 2nd and oil rings), distribute their end gaps as shown in figure.

INSTALLATION OR CONNECTION

1) Apply engine oil to pistons, rings, cylinder walls, connecting rod bearings and crankpins.

NOTE:
Do not apply oil between connecting rod and bearing or between bearing cap and bearing.

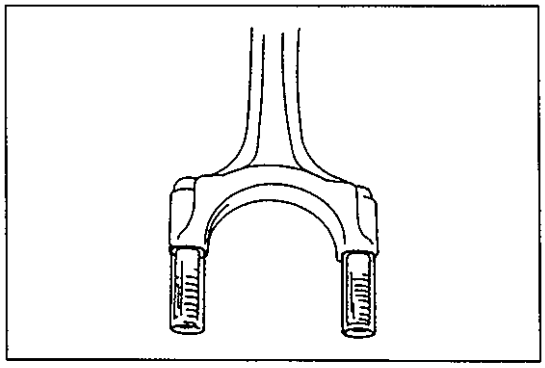

2) Install guide hoses over connecting rod bolts.
These guide hoses protect crankpin and threads of rod bolt from damage during installation of connecting rod and piston assembly.

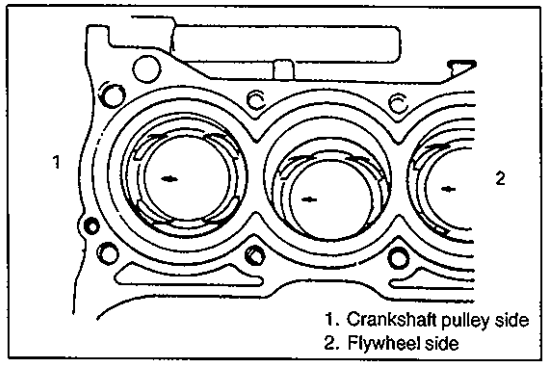

3) When installing piston and connecting rod assembly into cylinder bore, point arrow mark on piston head to crankshaft pulley side.

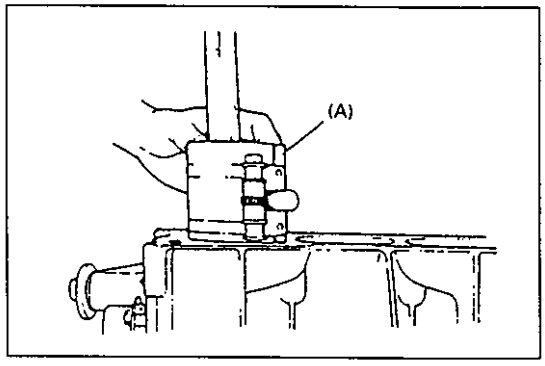

4) Install piston and connecting rod assembly into cylinder bore.
Use special tool (Piston ring compressor) to compress rings.
Guide connecting rod into place on crankshaft.
Using a hammer handle, tap piston head to install piston into bore. Hold ring compressor firmly against cylinder block until all piston rings have entered cylinder bore.

Special Tool
(A): 09916-77310

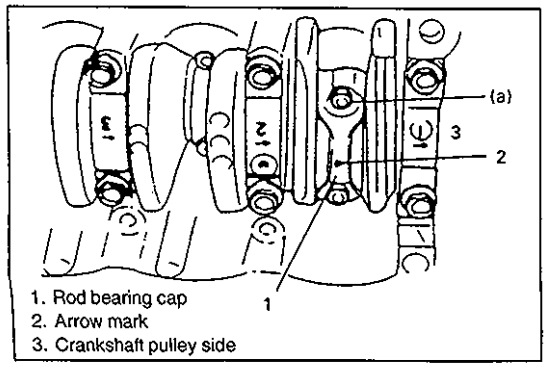

5) Install bearing cap:
Point arrow mark on cap to crankshaft pulley side.
Tighten cap nuts to specification.

Tightening Torque
(a): 35 N·m (3.5 kg-m, 25.5 lb-ft)

6) Reverse removal procedure for installation, as previously outlined.
7) Adjust water pump drive belt tension, referring to section 0B.
8) Adjust power steering pump belt tension or A/C compressor belt tension, if equipped. Refer to section 0B.
9) Adjust intake and exhaust valve lashes as previously outlined.
10) Adjust accelerator cable play. Refer to section 6E.
11) Check to ensure that all removed parts are back in place. Reinstall any necessary parts which have not been reinstalled.
12) Refill engine with engine oil, referring to item "ENGINE OIL CHANGE" in section 0B.
13) Refill cooling system referring to "ENGINE COOLING" section.
14) Connect negative cable at battery.
15) Verify that there is no fuel leakage, coolant leakage, oil leakage and exhaust gas leakage at each connection.
16) Verify that ignition timing is within specification referring to "IGNITION SYSTEM" section.

UNIT REPAIR OVERHAUL

ENGINE ASSEMBLY

REMOVAL

1) Release fuel pressure in fuel feed line by referring to Fuel Pressure Relief Procedure in section 6.
2) Disconnect negative cable from battery.
3) Remove engine hood.

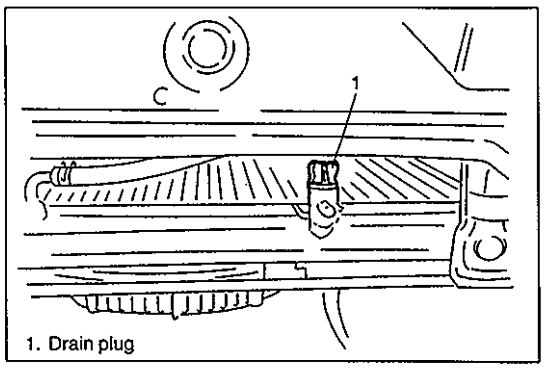

1. Drain plug

4) Drain cooling system.
5) Remove radiator fan and fan shroud.
   Refer to "ENGINE COOLING" section.

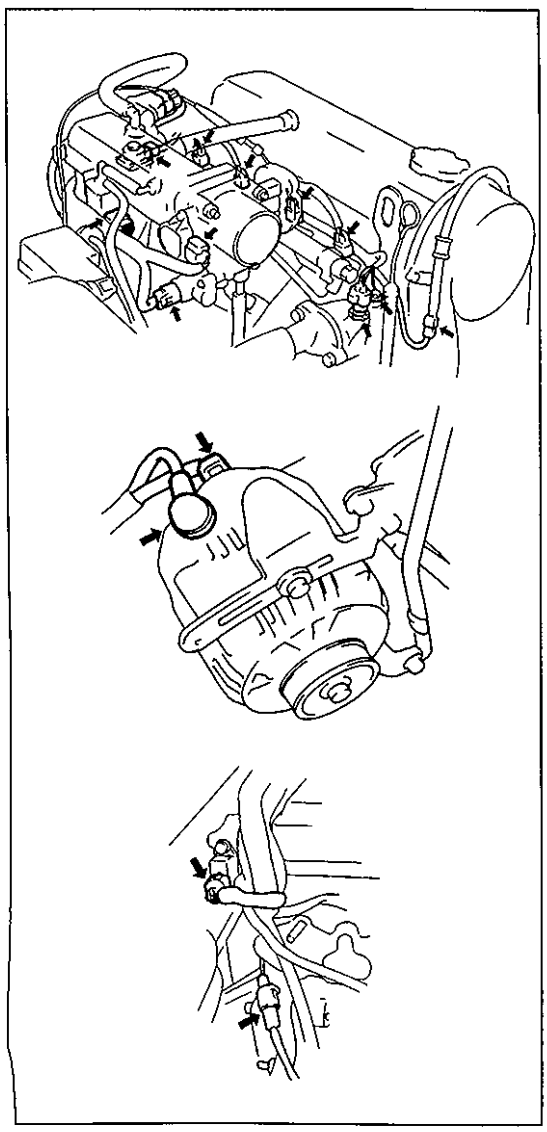

6) Remove air intake hose.
7) Disconnect following electric wires:
   - Ground wires from intake manifold
   - Camshaft position sensor
   - EGR valve (if equipped)
   - EVAP canister purge valve
   - Engine coolant temp. sensor
   - Throttle position sensor
   - Idle air control valve
   - Fuel injector wire at the connector
   - Generator
   - Ground cable from cylinder block
   - Heated oxygen sensor
   - Engine oil pressure switch

   and then release wire harnesses from clamps.
8) Remove starter motor.

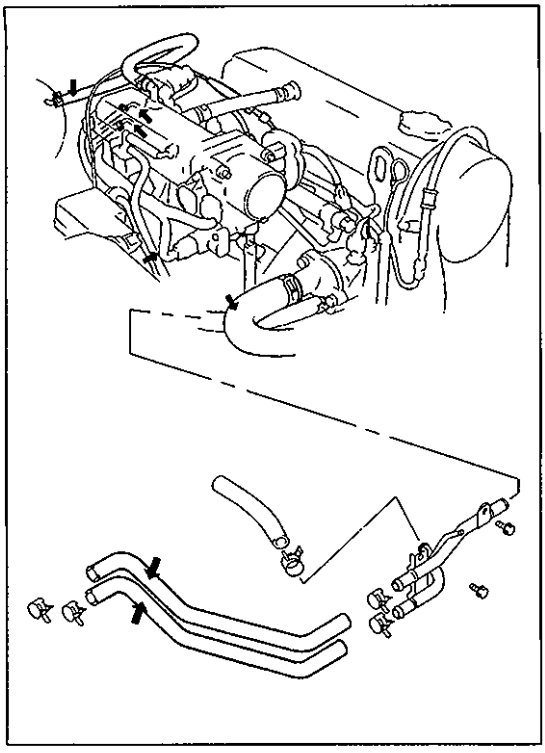

9) Disconnect following hoses:
   - Canister purge hose from EVAP canister purge valve
   - Radiator outlet hose from inlet pipe
   - Brake booster hose from intake manifold
   - Heater inlet and outlet hose from pipe
   - Fuel feed hose and return hose from each pipe
   - A/T fluid hose clamp from bracket
10) Disconnect accelerator cable from throttle body and each clamp.

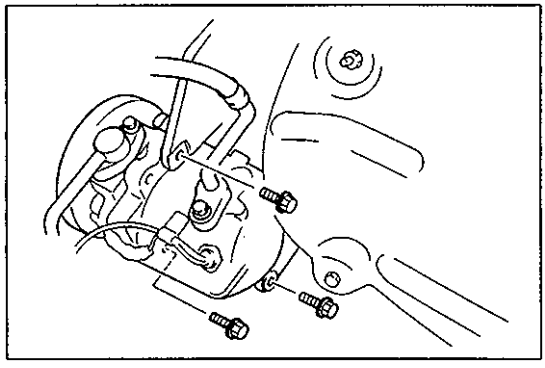

11) With hose connected, detach A/C compressor and/or power steering pump with bracket from cylinder block if equipped.

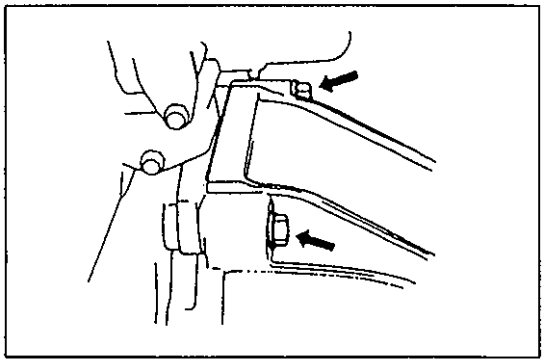

12) Loosen bolts fastening cylinder block and transmission.

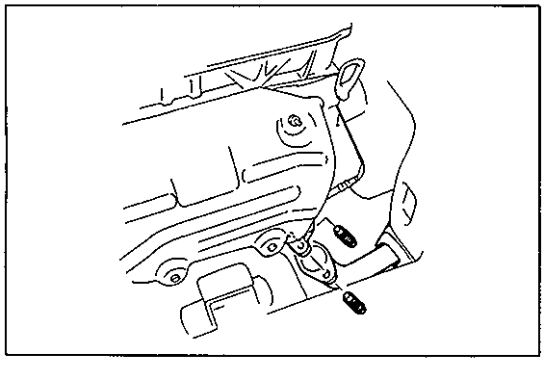

13) Hoist vehicle.
14) Drain engine oil if necessary.
15) Remove exhaust pipe bolts.

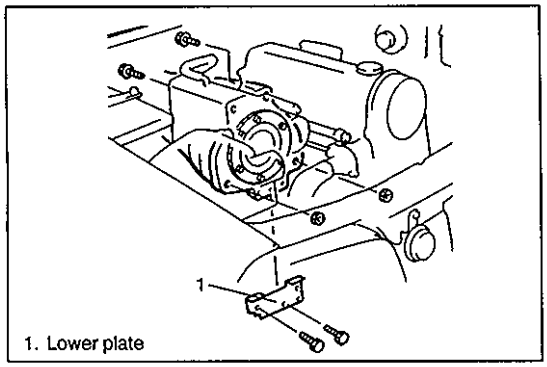

1. Lower plate

16) Remove clutch housing (torque converter housing) lower plate.

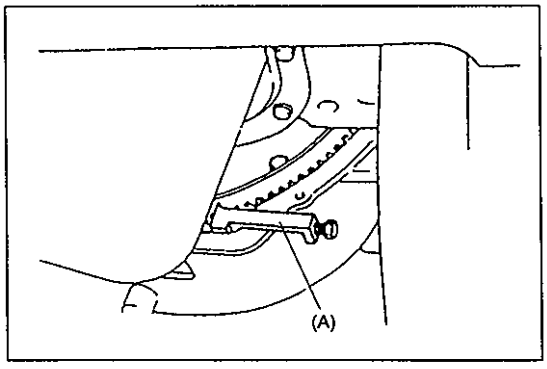

17) Remove torque converter bolts (A/T).

Special Tool
(A): 09927-56010

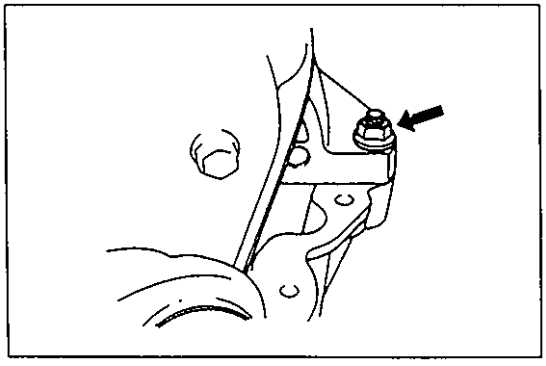

18) Remove nuts fastening cylinder block and transmission.
19) Lower vehicle.
20) Support transmission with jack.
With A/T vehicle, don't jack under A/T oil pan to support transmission.

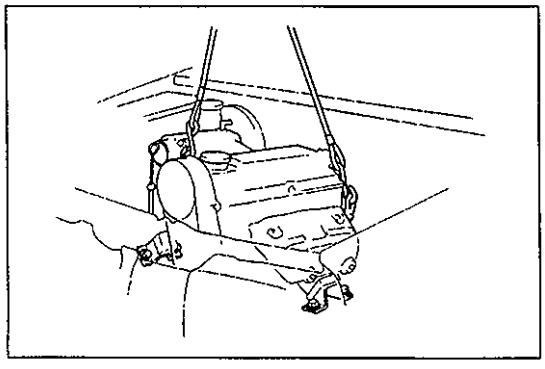

21) Install lifting device.
22) Remove engine mounting bracket nuts (R & L).
23) Before lifting engine, check to ensure all hoses, electric wires and cables are disconnected from engine.
24) Remove engine assembly from chassis and transmission by lifting a little, sliding towards the front side, and then carefully hoist engine assembly.

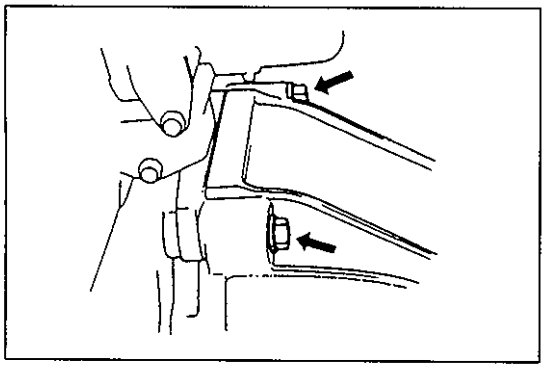

INSTALLATION

1) Lower engine assembly into engine compartment and connect engine to transmission.
   Hand-tighten bolts and nuts fastening cylinder block and transmission.

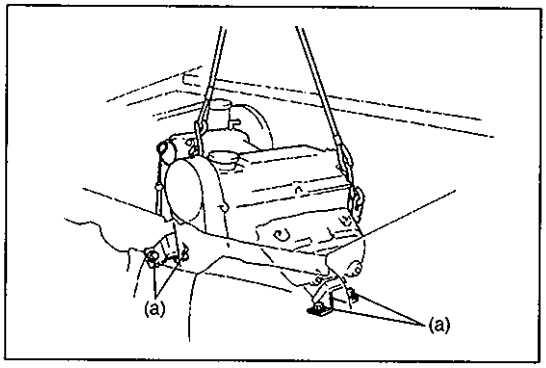

2) Tighten engine mounting bracket nuts (R & L).

   Tightening Torque
   (a): 50 N·m (5.0 kg-m, 36.5 lb-ft)

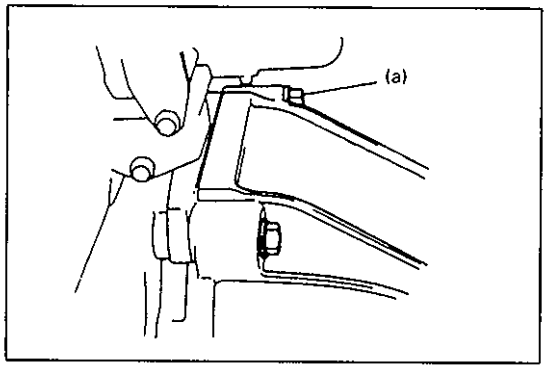

3) Tighten bolts fastening cylinder block and transmission to specified torque.

   Tightening Torque
   (a): 80 N·m (8.0 kg-m, 58.0 lb-ft)

4) Remove lifting device.

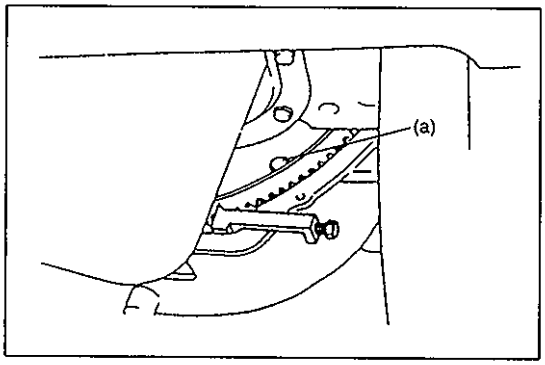

5) Reverse removal procedure for installation, noting the following.
   - Tighten torque converter bolts to specified torque (A/T).

     Tightening Torque
     (a): 65 N·m (6.5 kg-m, 47.0 lb-ft)

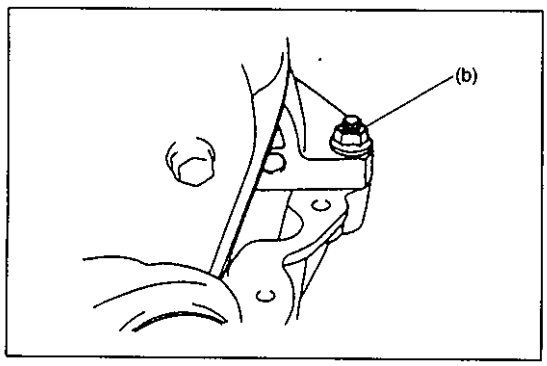

   - Tighten nuts fastening cylinder block and transmission to specified torque.

     Tightening Torque
     (b): 80 N·m (8.0 kg-m, 58.0 lb-ft)

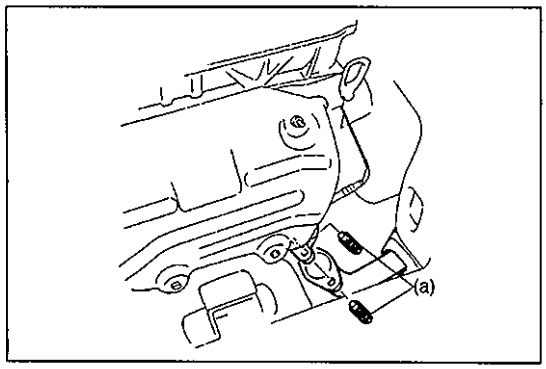

- Tighten bolts of exhaust pipes to specified torque.

  Tightening Torque
  (a): 50 N·m (5.0 kg-m, 36.5 lb-ft)

6) Adjust water pump drive belt tension, referring to "ENGINE COOLING" section.
7) Adjust power steering pump belt tension or A/C compressor belt tension, if equipped. Refer to section 0B.
8) Adjust accelerator cable play. Refer to section 6E.
9) Check to ensure that all removed parts are back in place. Reinstall any necessary parts which have not been reinstalled.
10) Refill engine with engine oil, referring to item "ENGINE OIL CHANGE" in section 0B.
11) Refill cooling system referring to "ENGINE COOLING" section.
12) Verify that there is no fuel leakage, coolant leakage and exhaust gas leakage at each connection.

MAIN BEARINGS, CRANKSHAFT AND CYLINDER BLOCK

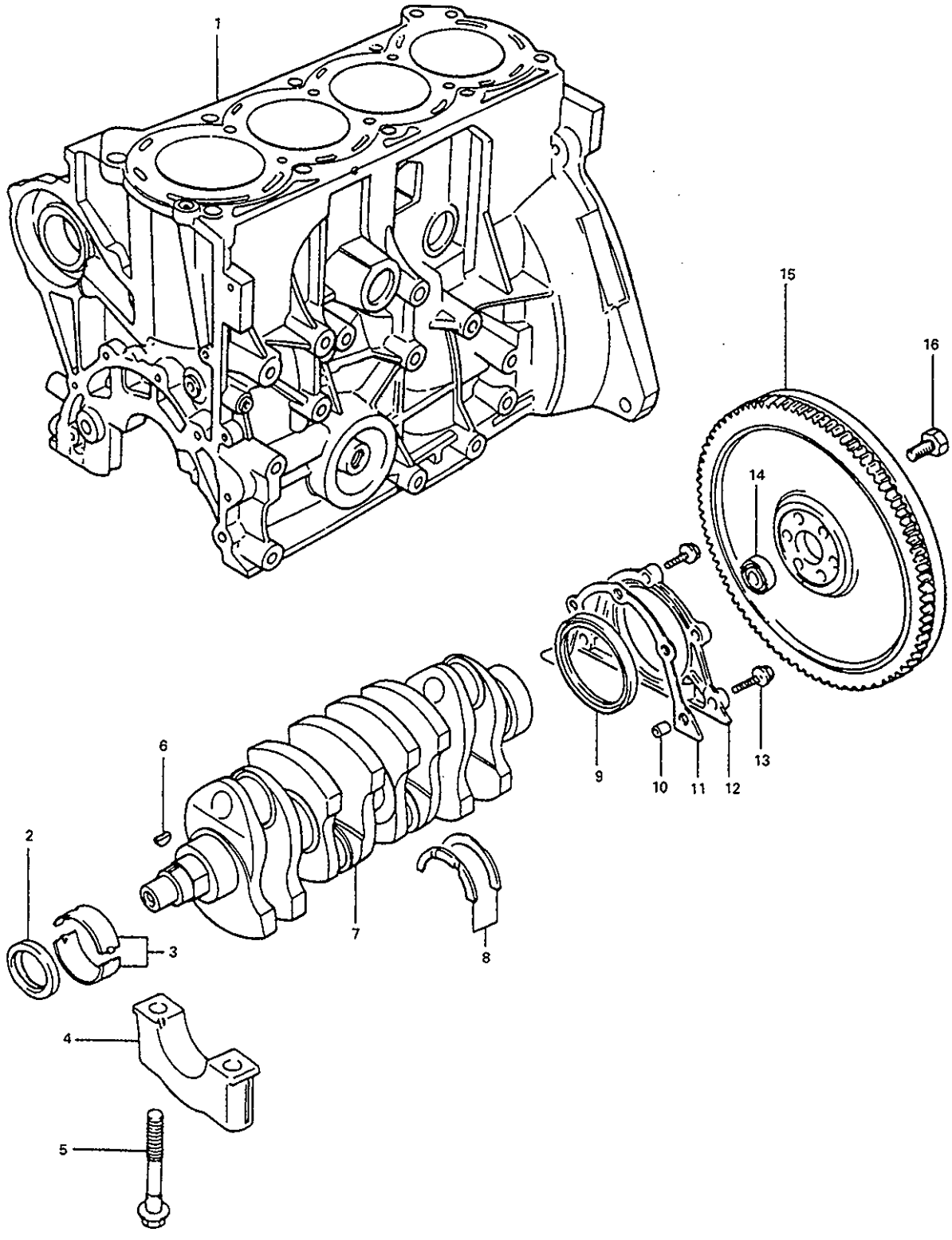

1. Cylinder block
2. Front oil seal
3. Main bearing
4. Bearing cap
5. Cap bolt
6. Timing pulley key
7. Crankshaft
8. Thrust bearing
9. Rear oil seal
10. Pin
11. Oil seal housing gasket
12. Oil seal housing
13. Housing bolt
14. Input shaft bearing
15. Flywheel
16. Flywheel bolt

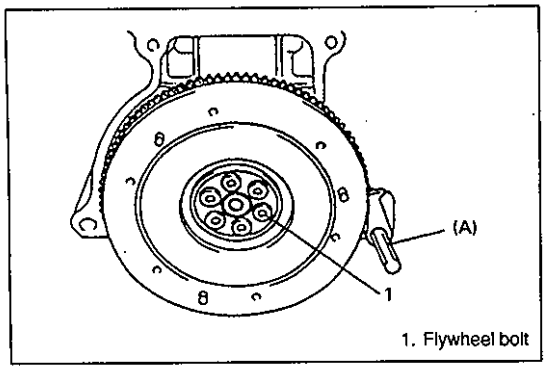

1. Flywheel bolt

REMOVAL

1) Remove engine assembly from body as previously outlined.
2) Remove clutch cover, clutch disc and flywheel (drive plate for A/T).

Special Tool
(A): 09924-17810

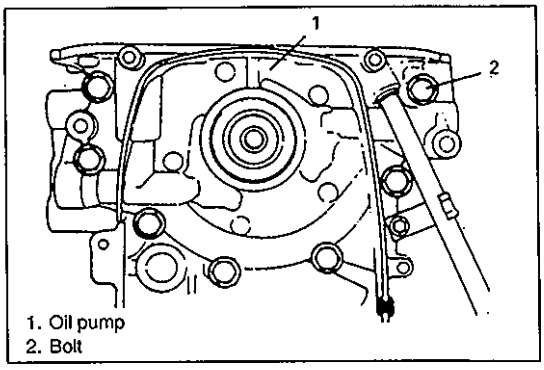

1. Oil pump
2. Bolt

3) Remove crankshaft pulley, timing belt and crankshaft timing pulley.
4) Remove cylinder head assembly.
5) Remove oil pump.

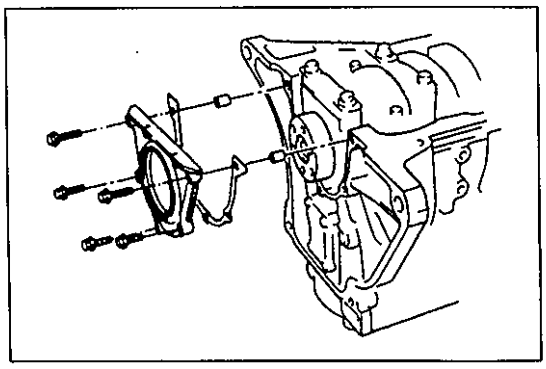

7) Remove oil seal housing.
8) Remove connecting rod bearing caps.

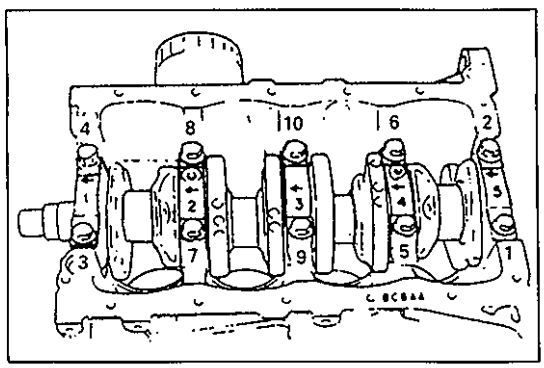

9) Loosen crankshaft bearing cap bolts in such order as indicated in figure a little at a time and remove bearing caps.
10) Remove crankshaft from cylinder block.

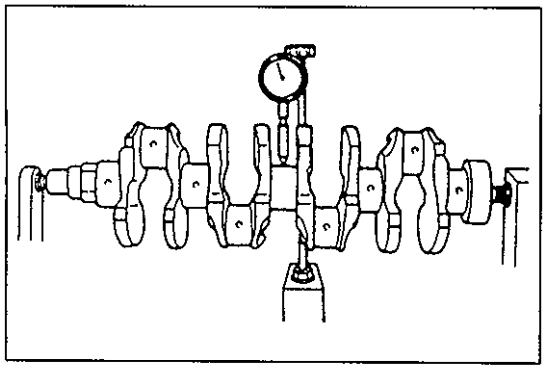

INSPECTION

Crankshaft

Crankshaft runout

Using a dial gauge, measure runout at center journal. Rotate crankshaft slowly. If runout exceeds its limit, replace crankshaft.

Limit on runout: 0.06 mm (0.0023 in.)

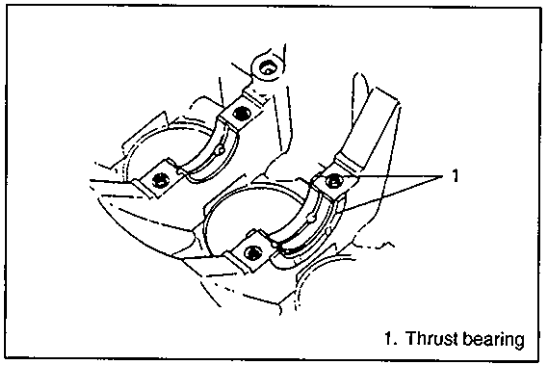

1. Thrust bearing

Crankshaft thrust play

Measure this play with crankshaft set in cylinder block in the normal manner, that is, with thrust bearing and journal bearing caps installed.

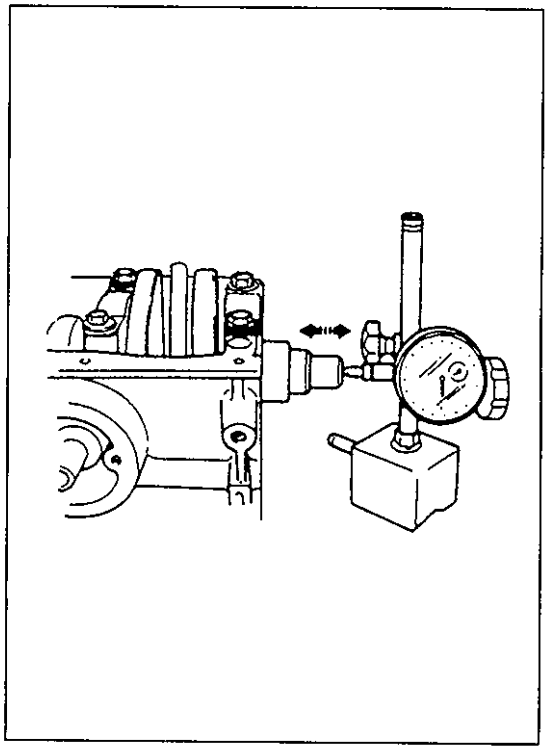

Use a dial gauge to read displacement in axial (thrust) direction of crankshaft.

If its limit is exceeded, replace thrust bearing with new standard one or oversize one to obtain standard thrust play.

Item	Standard	Limit
Crankshaft thrust play	0.11 – 0.31 mm (0.0044 – 0.0122 in.)	0.38 mm (0.0149 in.)

Thickness of crankshaft thrust bearing	Standard		2.500 mm (0.0984 in.)
	Oversize:	0.125 mm (0.0049 in.)	2.563 mm (0.1009 in.)

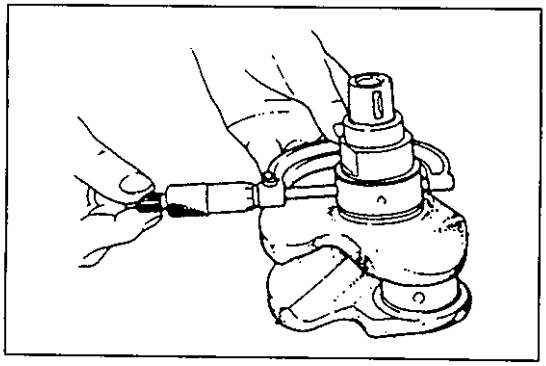

Out-of-round and taper (uneven wear) of journals

An unevenly worn crankshaft journal shows up as a difference in diameter at a cross section or along its length (or both). This difference, if any, is determined by taking micrometer readings.

If any one of journals is badly damaged or if amount of uneven wear in the sense explained above exceeds its limit, regrind or replace crankshaft.

Limit on out-of-round and taper: 0.01 mm (0.0004 in.)

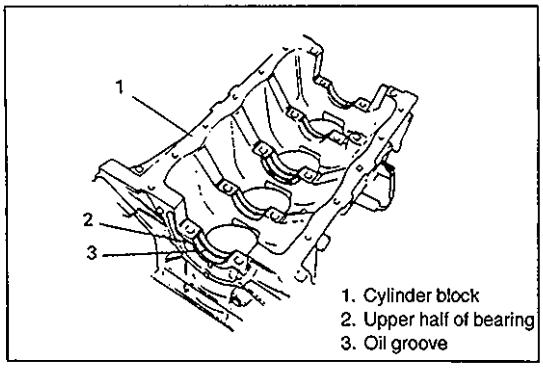

Main Bearings

General information

- Service main bearings are available in standard size and 0.25 mm (0.0098 in.) undersize, and each of them has 5 kinds of bearings differing in tolerance.
- Upper half of bearing has oil groove as shown in figure. Install this half with oil groove to cylinder block.

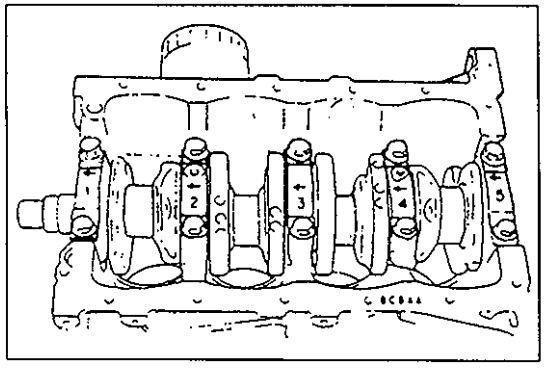

- On each main bearing cap, arrow mark and number are embossed as shown in figure.
  When installing each bearing cap to cylinder block, point arrow mark toward crankshaft pulley side and install each cap from that side to flywheel side in ascending order of numbers "1", "2", "3", "4" and "5". Tighten cap bolts to specified torque.

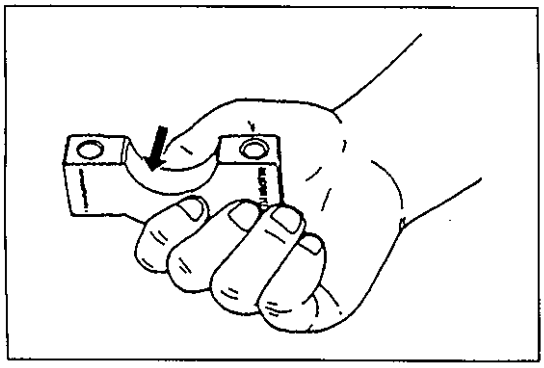

Inspection

Check bearings for pitting, scratches, wear or damage.
If any malcondition is found, replace both upper and lower halves.
Never replace one half without replacing the other half.

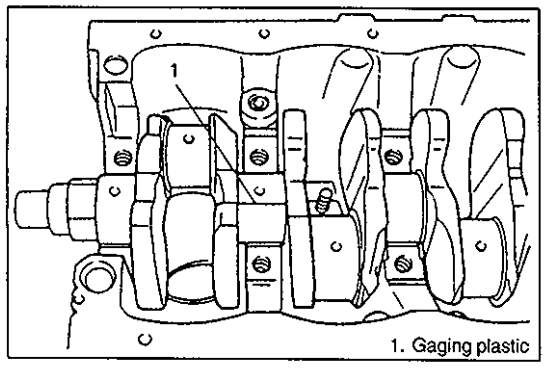

Main bearing clearance

Check clearance by using gaging plastic according to following procedure.

1) Remove bearing caps.
2) Clean bearings and main journals.
3) Place a piece of gaging plastic to full width of bearing (parallel to crankshaft) on journal, avoiding oil hole.

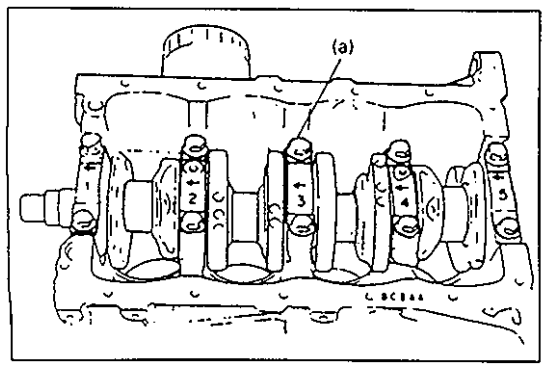

4) Install bearing cap as previously outlined and evenly toque cap bolts to specified torque.
   Bearing cap MUST be torqued to specification in order to assure proper reading of clearance.

   Tightening Torque
   (a): 52 N·m (5.2 kg-m, 38.0 lb-ft)

   NOTE:
   Do not rotate crankshaft while gaging plastic is installed.

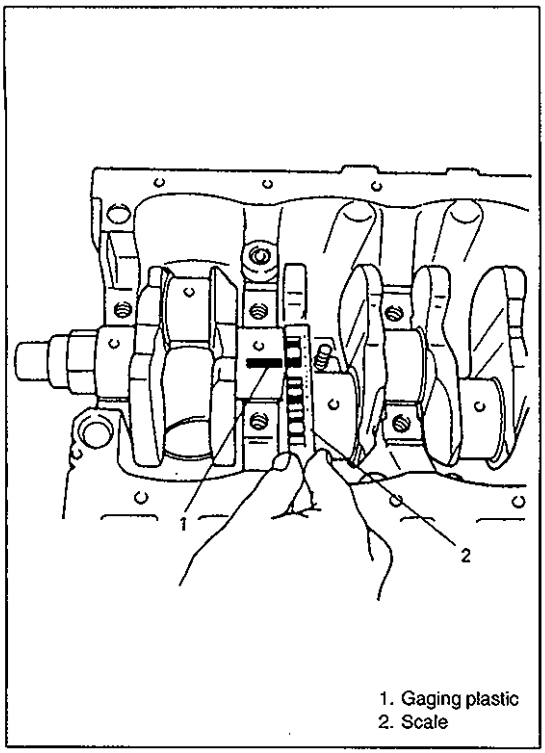

1. Gaging plastic
2. Scale

5) Remove cap and using scale on gaging plastic envelope, measure gaging plastic width at its widest point. If clearance exceeds its limit, replace bearing. Always replace both upper and lower inserts as a unit.
A new standard bearing may produce proper clearance. If not, it will be necessary to regrind crankshaft journal for use of 0.25 mm undersize bearing.
After selecting new bearing, recheck clearance.

	Standard	Limit
Bearing clearance	0.014 – 0.034 mm (0.0006 – 0.0013 in.)	0.060 mm (0.0023 in.)

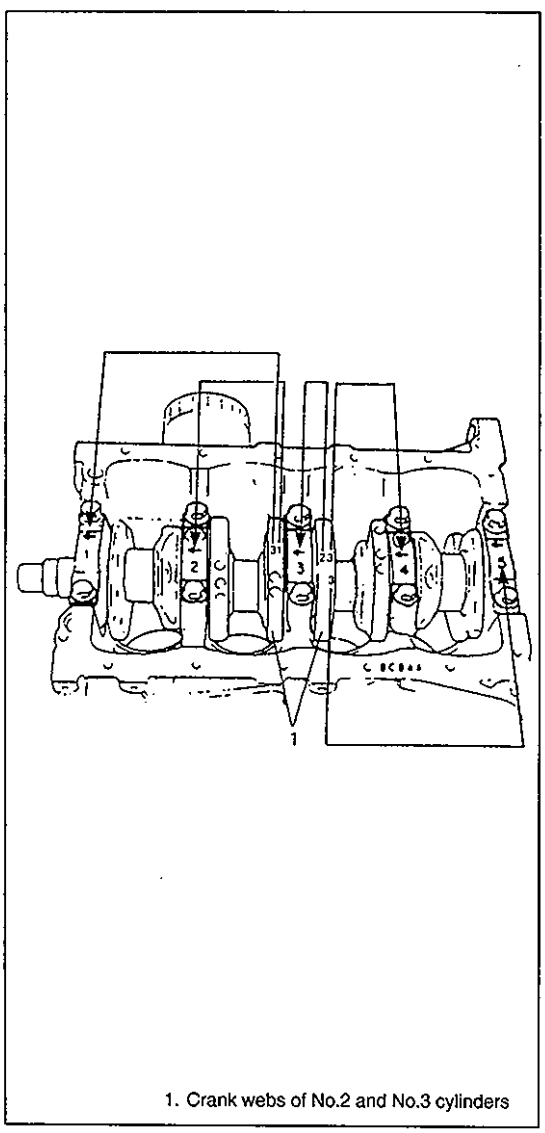

1. Crank webs of No.2 and No.3 cylinders

Selection of main bearings

STANDARD BEARING:

If bearing is in malcondition, or bearing clearance is out of specification, select a new standard bearing according to following procedure and install it.

1) First check journal diameter by using following procedure.
As shown in figure, crank webs of No.2 and No.3 cylinders have five stamped numerals.
Three kinds of numerals ("1", "2" and "3") represent following journal diameters.

Numeral stamped	Journal diameter
1	44.994 – 45.000 mm (1.7714 – 1.7716 in.)
2	44.988 – 44.994 mm (1.7712 – 1.7714 in.)
3	44.982 – 44.988 mm (1.7709 – 1.7712 in.)

The first, second, third, fourth and fifth (left to right) stamped numerals represent journal diameters at bearing caps "1", "2", "3", "4" and "5" respectively.
For example, in figure, the first (leftmost) numeral "3" indicates that journal dia. at bearing cap "1" is within 44.982 – 44.988 mm, and second one "1" indicate that journal dia. at cap "2" is within 44.994 – 45.000 mm.

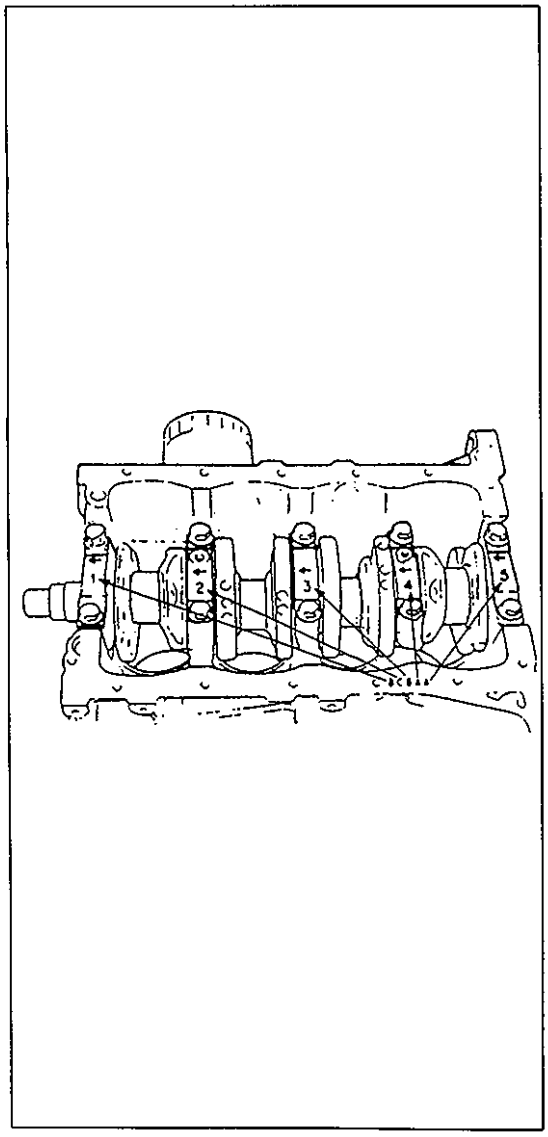

2) Next, check bearing cap bore diameter without bearing. On mating surface of cylinder block, four alphabets are stamped as shown in figure.
Three kinds of alphabets ("A", "B" and "C") represent following cap bore diameters.

Alphabet stamped	Bearing cap bore diameter (without bearing)
A	49.000 – 49.006 mm (1.9291 – 1.9294 in.)
B	49.006 – 49.012 mm (1.9294 – 1.9296 in.)
C	49.012 – 49.018 mm (1.9296 – 1.9298 in.)

The first, second, third, fourth and fifth (left to right) stamped alphabets represent cap bore diameters of bearing caps "1", "2", "3", "4" and "5", respectively.
For example, in figure, the first (leftmost) alphabet "B" indicates that cap bore dia. of bearing cap "1" is within 49.006 – 49.012 mm, and the fifth (rightmost) alphabet "A" indicates that cap bore dia. of cap "5" is within 49.000 – 49.006 mm.

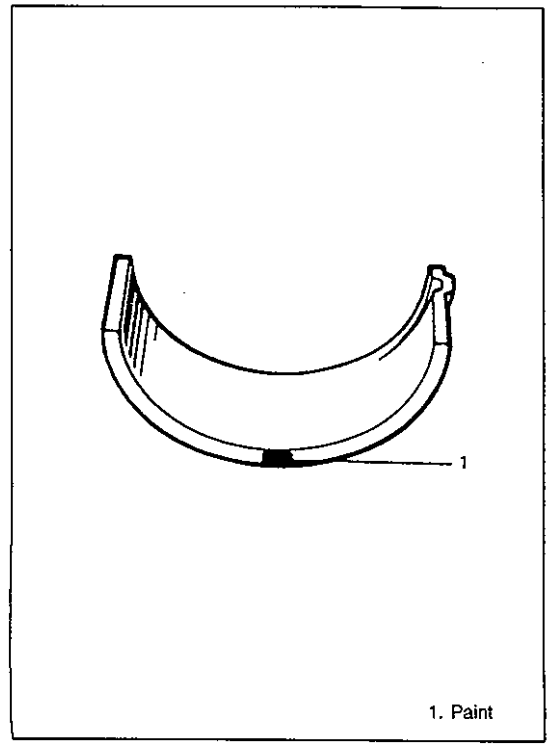

1. Paint

3) There are five kinds fo standard bearings differing in thickness. To distinguish them, they are painted in following colors at the position as indicated in figure.
Each color indicates following thickness at the center of bearing.

Color painted	Bearing thickness
Green	1.999 – 2.003 mm (0.0787 – 0.0789 in.)
Black	2.002 – 2.006 mm (0.0788 – 0.0790 in.)
Colorless (no paint)	2.005 – 2.009 mm (0.0789 – 0.0791 in.)
Yellow	2.008 – 2.012 mm (0.0791 – 0.0792 in.)
Blue	2.011 – 2.015 mm (0.0792 – 0.0793 in.)

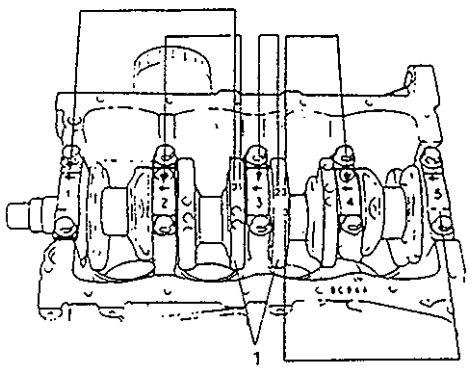

1. Crank webs of No.2 and No.3 cylinders

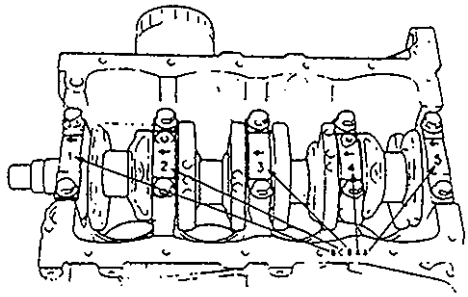

4) From numerals stamped on crank webs of No.2 and No.3 cylinders and the alphabets stamped on mating surface of cylinder block, determine new standard bearing to be installed to journal, by referring to table given below.
For example, if numeral stamped on crank web is "1" and alphabet stamped on mating surface is "B", install a new standard bearing painted in "Black" to its journal.

		Numeral stamped on crank web (Journal diameter)		
		1	2	3
Alphabet stamped on mating surface (Bearing cap bore dia.)	A	Green	Black	Colorless
	B	Black	Colorless	Yellow
	C	Colorless	Yellow	Blue
		New standard bearing to be installed.		

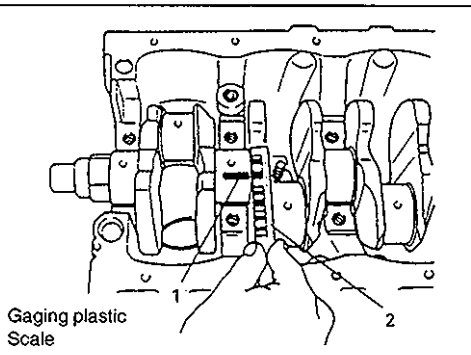

1. Gaging plastic
2. Scale

5) Using gaging plastic, check bearing clearance with newly selected standard bearing.
If clearance still exceeds its limit, use next thicker bearing and recheck clearance.
6) When replacing crankshaft or cylinder block due to any reason, select new standard bearings to be installed by referring to numerals stamped on new crankshaft or alphabets stamped on mating surface of new cylinder block.

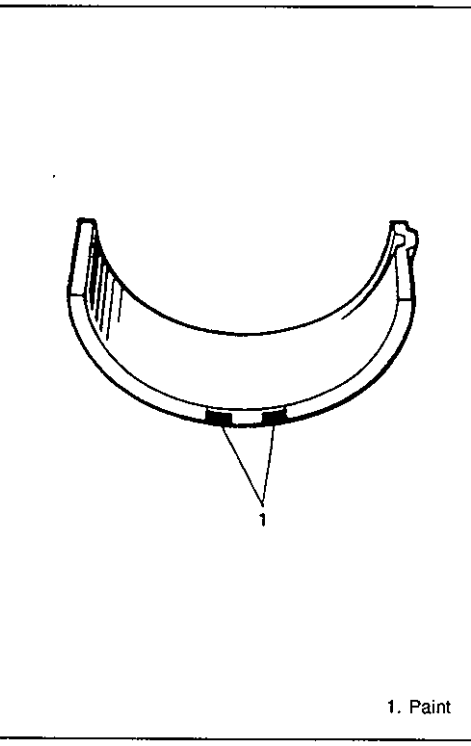

1. Paint

UNDERSIZE BEARING (0.25 mm):

- 0.25 mm undersize bearing is available, in five kinds varying in thickness.
To distinguish them, each bearing is painted in following colors at such position as indicated in figure.
Each color represents following thickness at the center of bearing.

Color painted	Bearing thickness
Green & Red	2.124 – 2.128 mm (0.0836 – 0.0838 in.)
Black & Red	2.127 – 2.131 mm (0.0837 – 0.0839 in.)
Red only	2.130 – 2.134 mm (0.0839 – 0.0840 in.)
Yellow & Red	2.133 – 2.137 mm (0.0840 – 0.0841 in.)
Blue & Red	2.136 – 2.140 mm (0.0841 – 0.0843 in.)

- If necessary, regrind crankshaft journal and select under-size bearing to use with it as follows.
  1) Regrind journal to following finished diameter.

Finished diameter: 44.732 – 44.750 mm (1.7611 – 1.7618 in.)

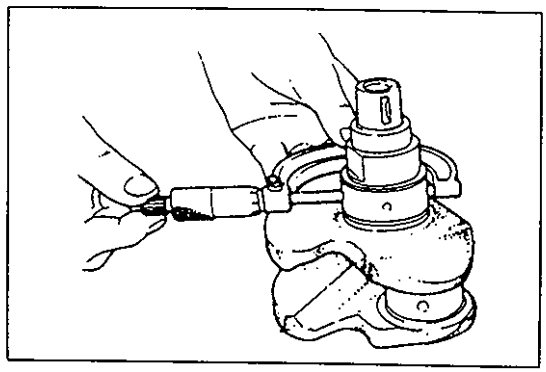

2) Using micrometer, measure reground journal diameter. Measurement should be taken in two directions perpendicular to each other in order to check for out-of-round.
3) Using journal diameter measured above and alphabets stamped on mating surface of cylinder block, select an under-size bearing by referring to table given below.
   Check bearing clearance with newly selected undersize bearing.

		Measured journal diameter		
		44.744 – 44.750 mm (2.0371 – 2.0373 in.)	44.738 – 44.744 mm (2.0369 – 2.0371 in.)	44.732 – 44.738 mm (2.0367 – 2.0369 in.)
Alphabet stamped on mating surface of cylinder block	A	Green & Red	Black & Red	Red only
	B	Black & Red	Red only	Yellow & Red
	C	Red only	Yellow & Red	Blue & Red
		Undersize bearing to be installed		

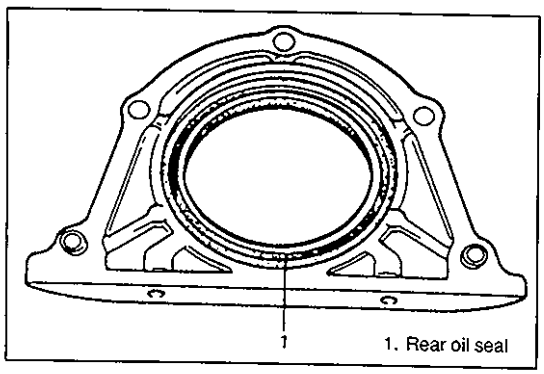

1. Rear oil seal

Rear Oil Seal

Carefully inspect oil seal for wear or damage. If its lip is worn or damaged, replace it.

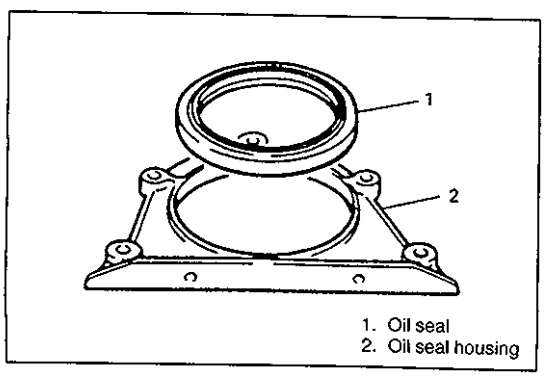

1. Oil seal
2. Oil seal housing

For oil seal installation, press-fit rear oil seal so that oil seal housing end face is flush with oil seal end face.

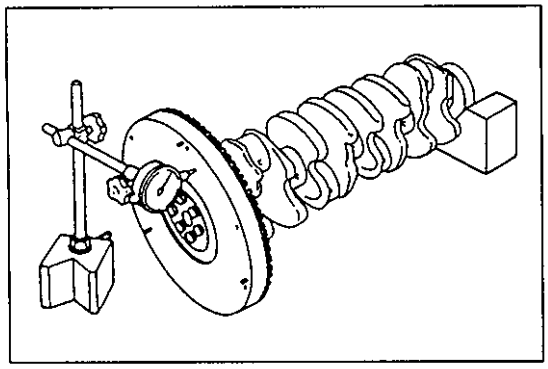

Flywheel

- If ring gear is damaged, cracked or worn, replace flywheel.
- If the surface contacting clutch disc is damaged, or excessively worn, replace flywheel.
- Check flywheel for face runout with dial gauge.
  If runout exceeds its limit, replace flywheel.

  Limit on runout: 0.2 mm (0.0078 in.)

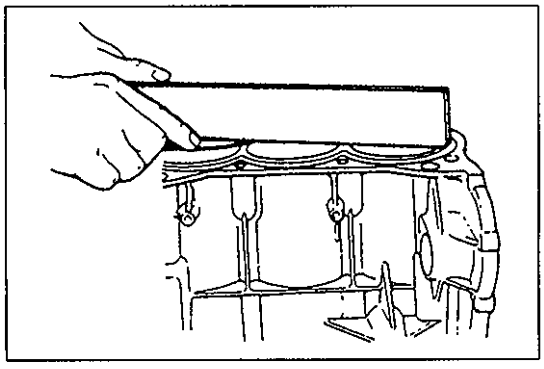

Cylinder Block

Distortion of gasketed surface

Using straightedge and thickness gauge, check gasketed surface for distortion and, if flatness exceeds its limit, correct it.

Item	Standard	Limit
Flatness	0.03 mm (0.0012 in.)	0.06 mm (0.0024 in.)

Honing or reboring cylinders

1) When any cylinder needs reboring, all other cylinders must also be rebored at the same time.
2) Select oversized piston according to amount of cylinder wear.

Size	Piston diameter
O/S 0.25	74.220 – 74.230 mm (2.9220 – 2.9224 in.)
O/S 0.50	74.470 – 74.480 mm (2.9319 – 2.9323 in.)

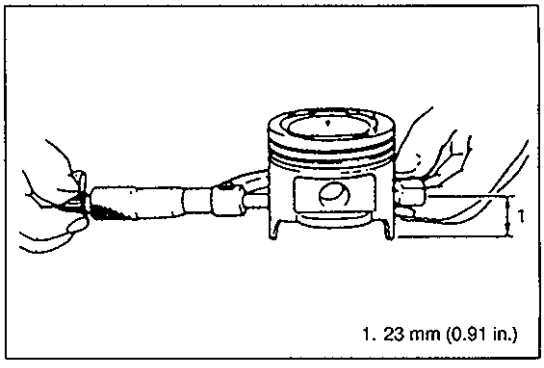

1. 23 mm (0.91 in.)

3) Using micrometer, measure piston diameter.

4) Calculate cylinder bore diameter to be rebored.

   $D = A + B - C$

   D: Cylinder bore diameter to be rebored.
   A: Piston diameter as measured.
   B: Piston clearance = 0.02 – 0.04 mm (0.0008 – 0.0015 in.)
   C: Allowance for honing = 0.02 mm (0.0008 in.)

5) Rebore and hone cylinder to calculated dimension.

NOTE:
Before reboring, install all main bearing caps in place and tighten to specification to avoid distortion of bearing bores.

6) Measure piston clearance after honing.

INSTALLATION

NOTE:
- **All parts to be installed must be perfectly clean.**
- **Be sure to oil crankshaft journals, journal bearings, thrust bearings, crankpins, connecting rod bearings, pistons, piston rings and cylinder bores.**
- **Journal bearings, bearing caps, connecting rods, rod bearings, rod bearing caps, pistons and piston rings are in combination sets. Do not disturb such combination and make sure that each part goes back to where it came from, when installing.**

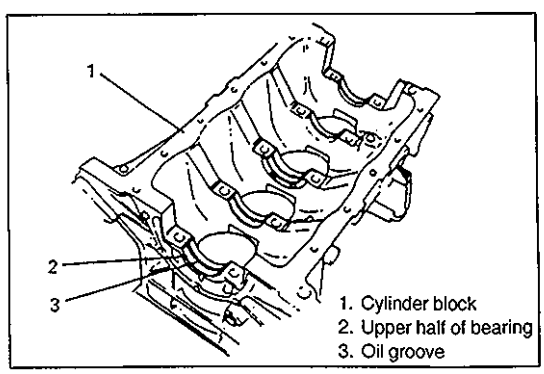

1) Install main bearings to cylinder block.
One of two halves of main bearing, has an oil groove. Install it to cylinder block, and the other half without oil groove to bearing cap.
Make sure that two halves are painted in the same color.

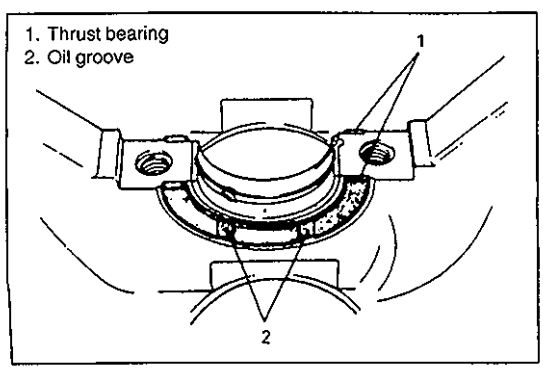

2) Install thrust bearings to cylinder block between No.2 and No.3 cylinders. Face oil groove sides to crank webs.

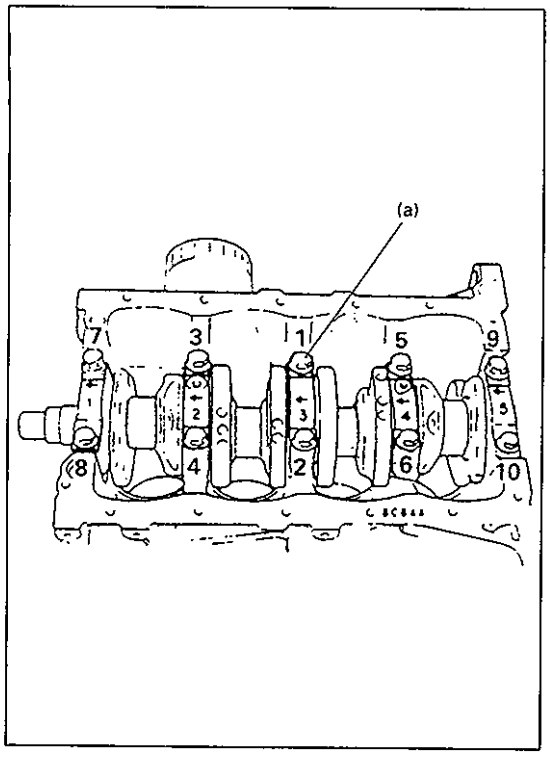

3) Install crankshaft to cylinder block.
4) Install bearing cap to cylinder block, making sure to point arrow mark (on each cap) to crankshaft pulley side. Fit them sequentially in ascending order, 1, 2, 3, 4 and 5, starting from pulley side.
After installing bearing cap stiffeners, tighten bearing cap bolts in such order as shown in figure a little at a time and repeat it till they are tightened to specified torque.

Tightening Torque
(a): 52 N·m (5.2 kg-m, 38.0 lb-ft)

NOTE:
After tightening cap bolts, check to be sure that crankshaft rotates smoothly when turning it by 8.0 N·m (0.8 kg-m, 5.8 lb-ft) torque or below.

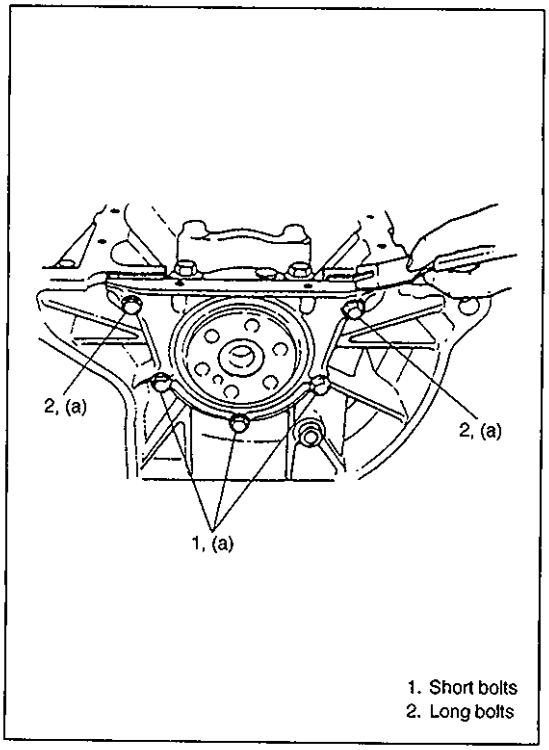

1. Short bolts
2. Long bolts

5) Install new gasket and oil seal housing.
Do not reuse gasket removed in disassembly. Apply engine oil to oil seal lip before installation. Tighten housing bolts to specification.

Tightening Torque
(a): 11 N·m (1.1 kg-m, 8.0 lb-ft)

NOTE:
As there are 2 types of housing bolts, refer to figure for their correct use.

After installing oil seal housing, gasket edges might bulge out; if so, cut them off to make them flush with cylinder block and oil seal housing.

6) Install oil pump.
Refer to item "Oil pump" for installation of oil pump.

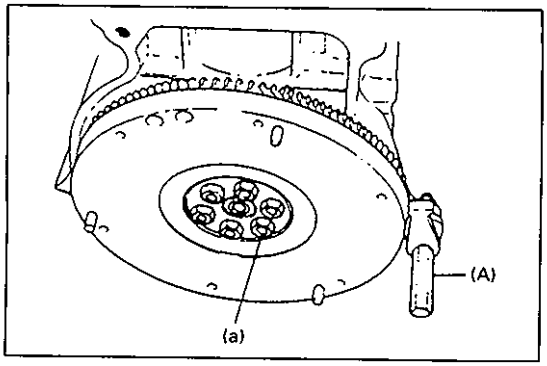

7) Install flywheel (M/T model) or drive plate (A/T model).
Using special tool, lock flywheel or drive plate, and torque its bolts to specification.

Special Tool
(A): 09924-17810

Tightening Torque
(a): 76 N·m (7.6 kg-m, 55.0 lb-ft)

8) Install pistons and connecting rods as previously outlined.
9) Install oil pump strainer and oil pan as previously outlined.

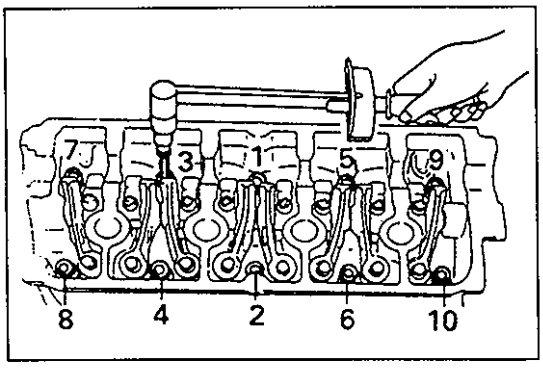

10) Install cylinder head assembly to cylinder block as previously outlined.

NOTE:
Tighten cylinder head bolts to specified torque as previously outlined and loosen them once till tightening torque becomes "zero". And then torque them to specification again.

11) Install camshaft, crankshaft timing belt pulley, timing belt, crankshaft pulley, water pump pulley, etc., as previously outlined.
12) Install clutch to flywheel (for M/T vehicle). For clutch installation, refer to "CLUTCH" section.

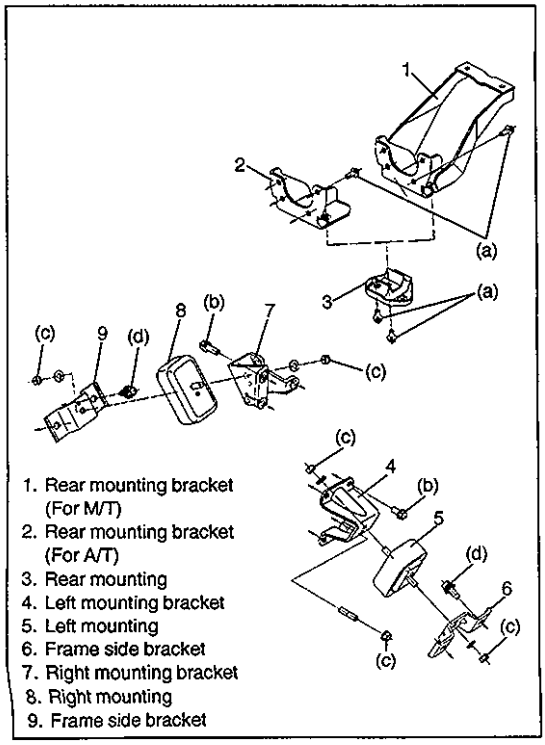

13) Install engine mountings brackets.

Tightening Torque
(a): 25 N·m (2.5 kg-m, 18.0 lb-ft)
(b): 55 N·m (5.5 kg-m, 40.0 lb-ft)
(c): 45 N·m (4.5 kg-m, 32.5 lb-ft)
(d): 50 N·m (5.0 kg-m, 36.5 lb-ft)

14) Install engine assembly to vehicle as previously outlined.

TIGHTENING TORQUE SPECIFICATIONS

FASTENING PARTS	TIGHTENING TORQUE		
	N·m	kg-m	lb-ft
Oil pressure switch	14	1.4	10.5
Valve adjusting screw lock nuts	12	1.2	9.0
Cylinder head cover bolts	10	1.0	7.5
Intake manifold nuts	23	2.3	17.0
Exhaust manifold nuts	23	2.3	17.0
Exhaust pipe bolts	50	5.0	36.5
Timing belt tensioner stud	10	1.0	7.5
Timing belt tensioner bolt	27	2.7	19.5
Timing belt cover bolts and nut	10	1.0	7.5
Crankshaft pulley bolt	16	1.6	11.5
Oil pump strainer bolt and stay bolt Oil pan bolts and nuts	10	1.0	7.5
Oil pan drain plug	35	3.5	25.5
Oil pump rotor plate screws Oil pump case bolts	10	1.0	7.5
Crankshaft timing belt pulley bolt	128	12.8	92.5
Camshaft housing bolts Rocker arm shaft bolts	10	1.0	7.5
Rocker arm shaft plug	32	3.2	23.5
Camshaft timing belt pulley bolt	59	5.9	43.0
CMP sensor bolts	10	1.0	7.5
Cylinder head venturi plug	5	0.5	4.0
Cylinder head bolts	68	6.8	49.5
Connecting rod bearing cap nuts	35	3.5	25.5
Bolt and nuts fastening T/M and cylinder block	80	8.0	58.0
Torque converter bolts (A/T)	65	6.5	47.0
Crankshaft main bearing cap bolts	52	5.2	38.0
Flywheel bolts (Drive plate bolts for A/T)	76	7.6	55.0
Engine mounting & bracket bolts and nuts	Refer to 6A-73.		

SPECIAL TOOLS

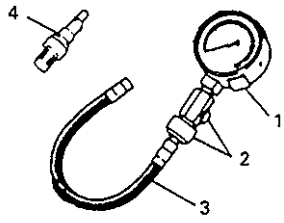

1. 09915-64510-001
   Compression gauge
2. 09915-64510-002
   Connector
3. 09915-64530
   Hose
4. 09915-67010
   Attachment

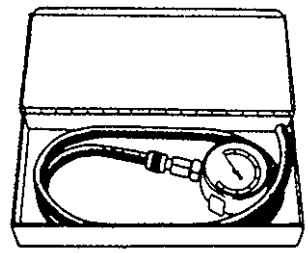

09915-67310
Vacuum gauge

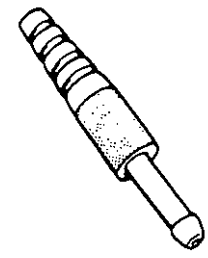

09918-08210
Vacuum gauge hose joint

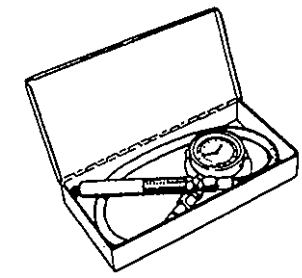

09915-77310
Oil pressure gauge

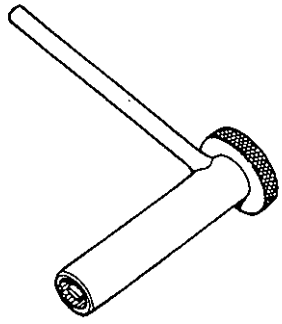

09917-18210
Tappet adjuster wrench

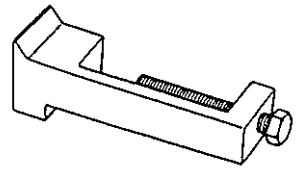

09927-56010
Gear stopper

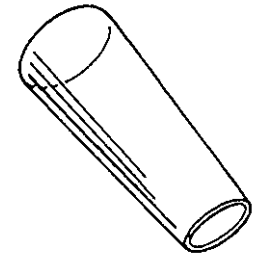

09926-18210
Oil seal guide
(Vinyl resin)

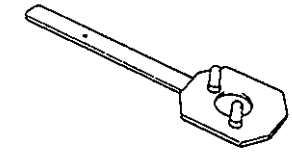

09917-68220
Camshaft pulley holder

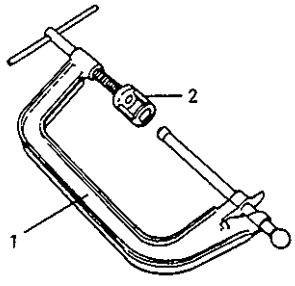

1. 09916-14510
   Valve lifter
2. 09916-14910
   Valve lifter attachment

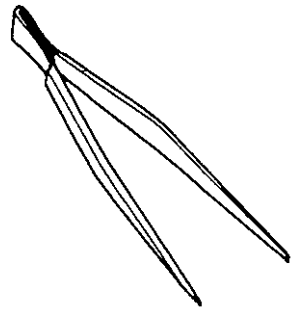

09916-84511
Forceps

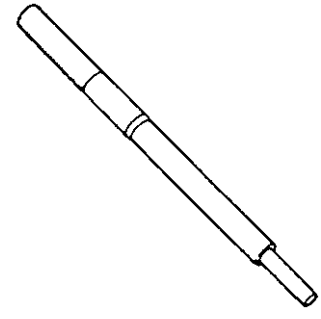

09916-44910
Valve guide remover

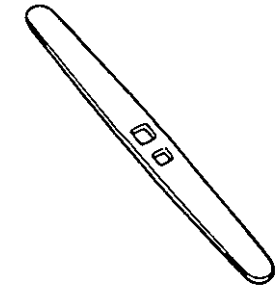

09916-34542
Reamer handle

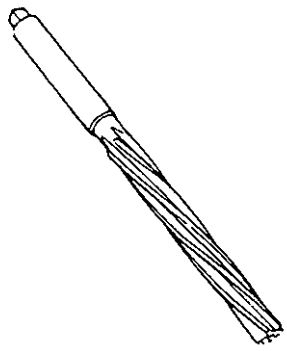

09916-38210
Reamer (11 mm)

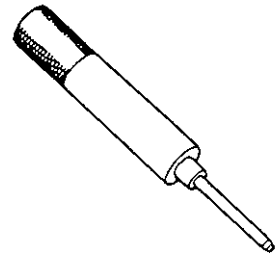

09916-58210
Valve guide installer
handle

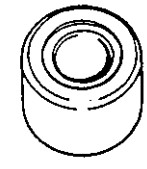

09916-56011
Valve guide installer
attachment

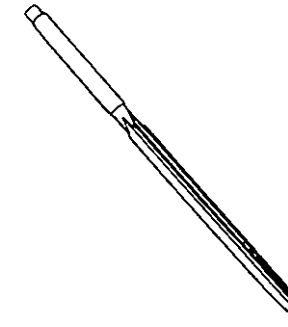

09916-34550
Reamer (5.5 mm)

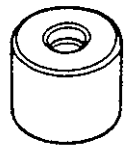	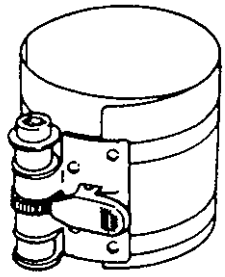	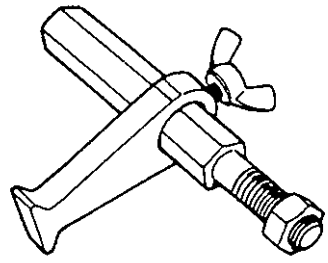	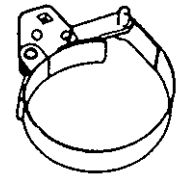
09917-98221 Valve stem seal installer	09916-77310 Piston ring compressor	09924-17810 Flywheel holder	09915-47330 Oil filter wrench

REQUIRED SERVICE MATERIALS

MATERIALS	RECOMMENDED SUZUKI PRODUCT	USE
Sealant	SUZUKI BOND NO. 1207C (99000-31150)	• Mating surfaces of cylinder block and oil pan.
Sealant	SUZUKI BOND NO. 1215 (99000-31110)	• Mating surfaces of camshaft housings (No.6). • Mating surfaces of camshaft position sensor case and cylinder head.

SECTION 6B

ENGINE COOLING

CONTENTS

GENERAL DESCRIPTION 6B- 2
DIAGNOSIS 6B- 6
MAINTENANCE 6B- 7
Coolant 6B- 7
Coolant Level 6B- 8
Cooling System Service 6B- 8
Cooling System Flush and Refill 6B- 9
Water Pump Belt Tension 6B-11
ON-VEHICLE SERVICE 6B-12
Coolant Draining 6B-12
Cooling Water Pipes or Hoses 6B-12
Thermostat 6B-13
Water Pump Belt and Cooling Fan 6B-14
Radiator 6B-15
Water Pump 6B-16
TIGHTENING TORQUE SPECIFICATION 6B-18
REQUIRED SERVICE MATERIAL 6B-18

GENERAL DESCRIPTION

The cooling system consists of the radiator cap, radiator, reservoir tank, hoses, water pump, cooling fan & clutch, thermostat. The radiator is of tube-and fin type.

COOLING SYSTEM CIRCULATION

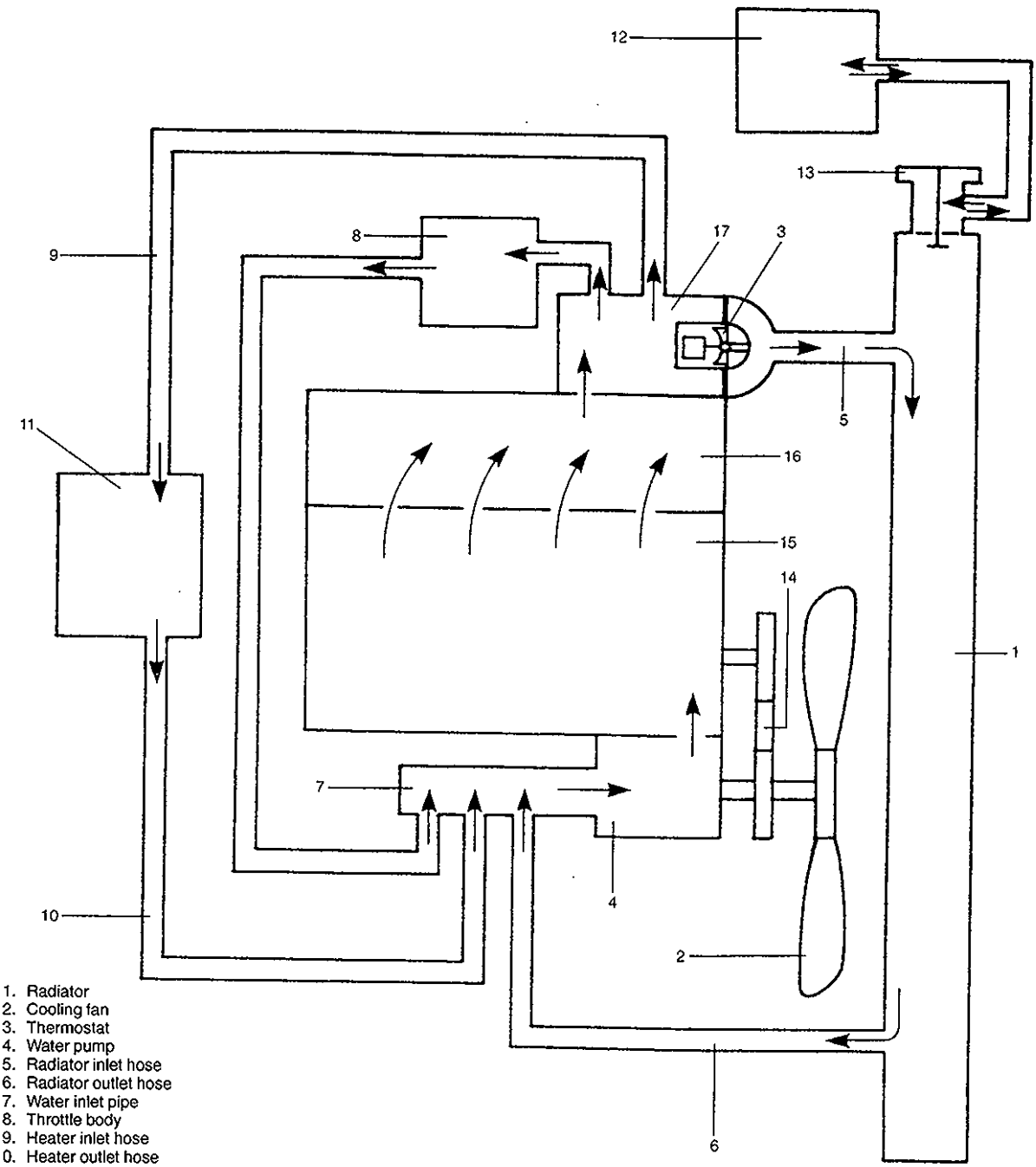

1. Radiator
2. Cooling fan
3. Thermostat
4. Water pump
5. Radiator inlet hose
6. Radiator outlet hose
7. Water inlet pipe
8. Throttle body
9. Heater inlet hose
10. Heater outlet hose
11. Heater core
12. Reservoir tank
13. Radiator cap
14. Water pump belt
15. Cylinder block
16. Cylinder head
17. Intake manifold

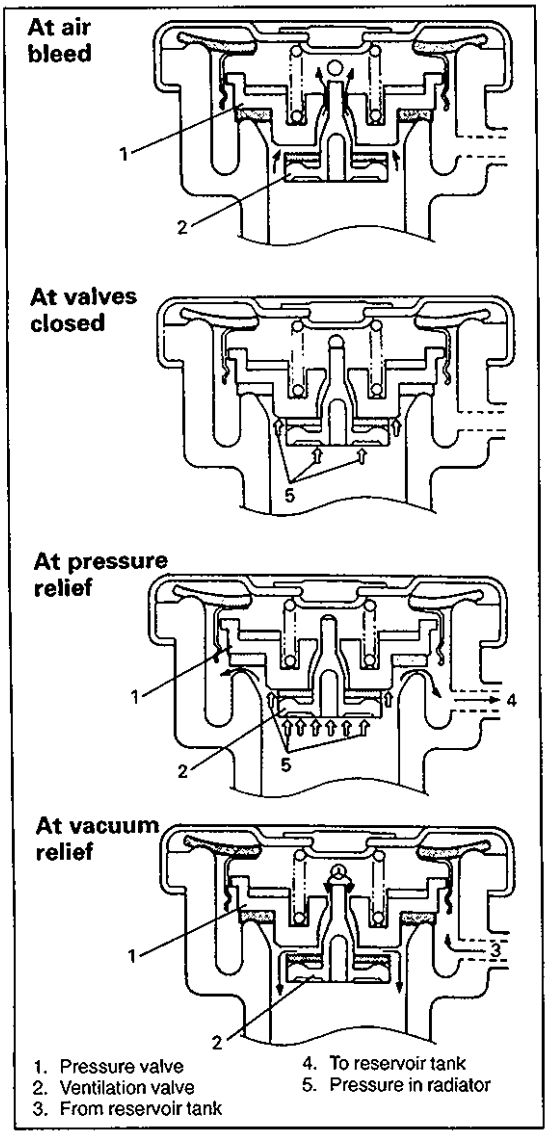

1. Pressure valve
2. Ventilation valve
3. From reservoir tank
4. To reservoir tank
5. Pressure in radiator

RADIATOR CAP

A pressure-vent cap is used on the radiator. The cap contains a pressure valve and ventilation valve.
The cap has its face marked 0.9, which means that its pressure valve opens at 0.9 kg/cm^2 (12.8 psi, 90 kPa).

NOTE:
Do not remove radiator cap to check engine coolant level; check coolant visually at the see-through coolant reservoir tank.
Coolant should be added only to reservoir tank as necessary.

WARNING:
As long as there is pressure in the cooling system, the temperature can be considerably higher than the boiling temperature of the solution in the radiator without causing the solution to boil. Removal of the radiator cap while engine is hot and pressure is high will cause the solution to boil instantaneously and possibly with explosive force, spewing the solution over engine, fenders and person removing cap. If the solution contains flammable anti-freeze such as alcohol (not recommended for use at any time), there is also the possibility or causing a serious fire.

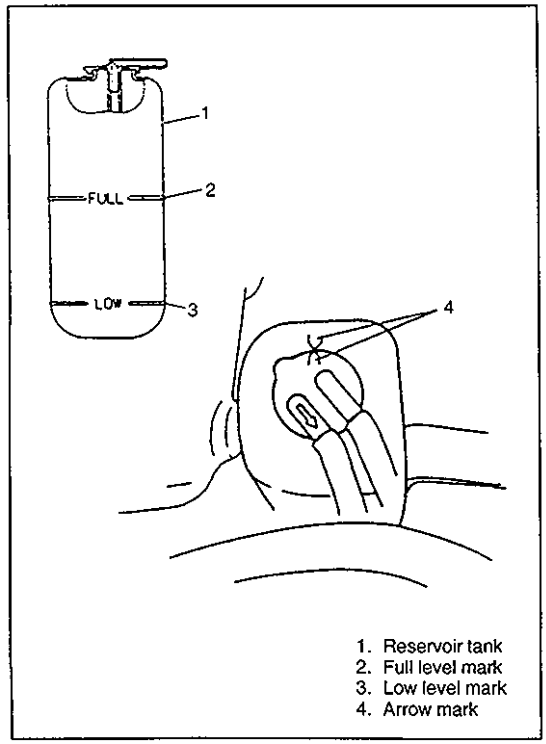

1. Reservoir tank
2. Full level mark
3. Low level mark
4. Arrow mark

COOLANT (WATER) RESERVOIR TANK

A "see-through" plastic reservoir tank is connected to the radiator by a hose.
Coolant level should be between "FULL" and "LOW" marks on the reservoir tank.
Coolant should be added only to the reservoir tank as necessary.

NOTE:
When installing reservoir tank cap, set arrow marks on the tank and cap as left figure.

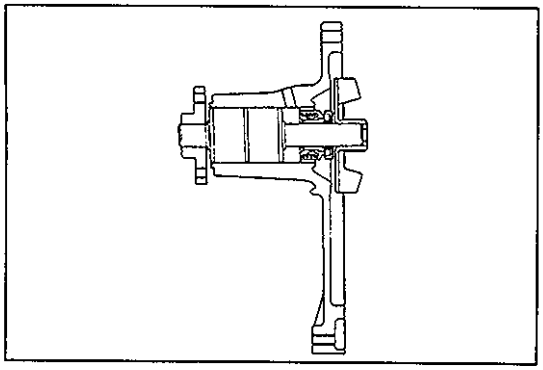

WATER PUMP

The centrifugal type water pump is used in the cooling system.
The pump impeller is supported by a totally sealed bearing.
The water pump can not be disassembled.

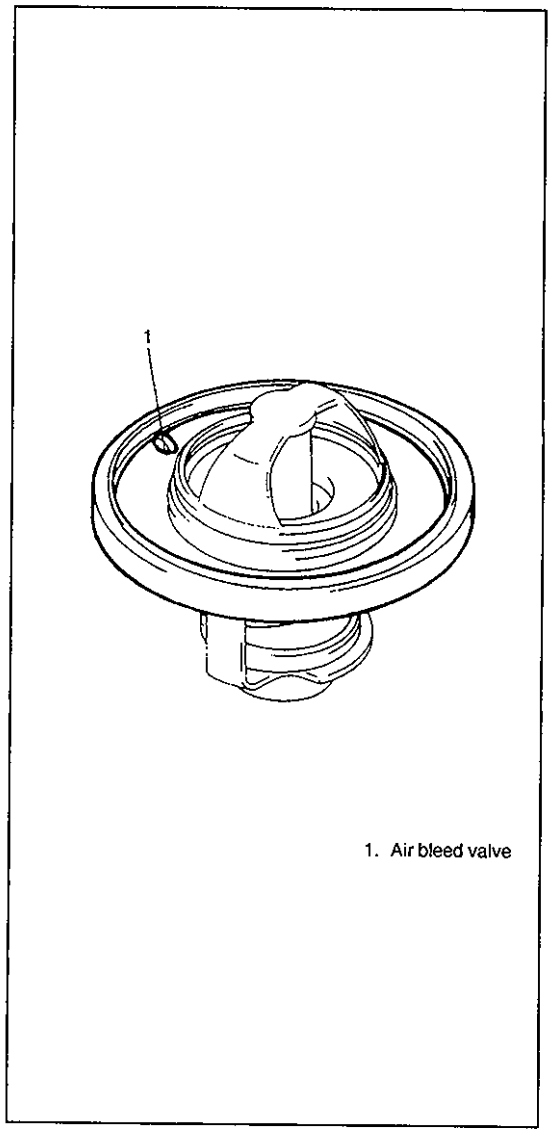

1. Air bleed valve

THERMOSTAT

A wax pellet type thermostat is used in the cooling system.
The temperature at which the valve begins to open is stamped on thermostat.
In the top portion of the thermostat, an air bleed valve is provided; this valve is for venting out the gas or air, if any, that is accumulated in the circuit.

Thermostat functional spec. ± 1.5°C (34.7°F)	
Temp. at which valve begins to open	88°C (190°F)
Temp. at which valve become fully open	100°C (212°F)
Valve lift	More than 8 mm at 100°C

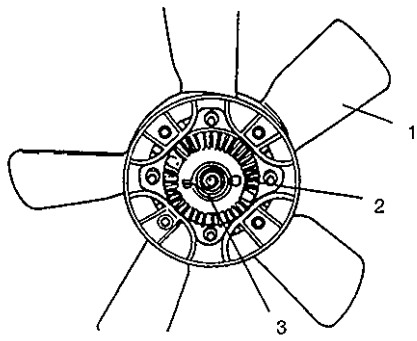

1. Cooling fan
2. Fan clutch
3. Bimetal

COOLING FAN CLUTCH

Fluid is enclosed in the cooling fan clutch and at its center front, there is a bimetal whose thermal reaction and the engine speed control the cooling fan speed.

NOTE:
Do not disassemble clutch assembly.

WARNING:
Keep hands, tools, and clothing away from engine cooling fan to help prevent personal injury.

COOLANT (WATER) TEMP. GAUGE

A water temp. gauge is located at intake manifold.
This gauge activates a temp. meter in the instrument cluster.
When installing, wind sealing tape on gauge thread and tighten it.

DIAGNOSIS

Condition	Possible cause	Correction
Engine overheats	• Loose or broken water pump belt	Adjust or replace.
	• Not enough coolant	Check coolant level and add as necessary.
	• Faulty thermostat	Replace.
	• Faulty water pump	Replace.
	• Dirty or bent radiator fins	Clean or remedy.
	• Coolant leakage on cooling system	Repair.
	• Defective cooling fan clutch	Check and replace as necessary.
	• Plugged radiator	Check and replace radiator as necessary.
	• Faulty radiator cap	Replace.
	• Maladjusted ignition timing	Adjust.
	• Dragging brakes	Adjust brake.
	• Slipping clutch	Adjust or replace.

MAINTENANCE

COOLANT

The coolant recovery system is standard. The coolant in the radiator expands with heat, and the overflow is collected in the reservoir tank.
When the system cools down, the coolant is drawn back into the radiator.
The cooling system has been filled at the factory with a quality coolant that is either 50/50 mixture of water and anti-freeze/anti-corrosion coolant (ethylene glycol antifreeze).
The 50/50 mixture coolant solution provides freezing protection to –36 °C (–33 °F).

- Maintain cooling system freeze protection at –36 °C (–33 °F) to ensure protection against corrosion and loss of coolant from boiling.
  This should be done even if freezing temperatures are not expected.
- Add ethylene glycol base coolant when coolant has to be added because of coolant loss or to provide added protection against freezing at temperature lower than –36 °C (–33 °F).

		For manual and automatic transmission model		
ANTI-FREEZE PROPORTIONING CHART	Freezing temperature	°C	–16	–36
		°F	3	–33
	Anti-freeze/Anti-corrosion coolant concentration	%	30	50
	Ratio of compound to cooling water	ltr.	1.35/3.15	2.25/2.25
		US pt.	2.85/6.65	4.75/4.75
		Imp. pt.	2.37/5.53	3.95/3.95
COOLANT CAPACITY	Engine, radiator and heater	3.8 liters (8.0/6.7 US/Imp pt.)		
	Reservoir tank	0.7 liters (1.5/1.2 US/Imp pt.)		
	Total	4.5 liters (9.5/7.9 US/Imp pt.)		

NOTE:

- **Alcohol or methanol base coolant or plain water alone should not be used in cooling system at any time as damage to cooling system could occur.**
- **Even in a market where no freezing temperature is anticipated, mixture of 70% water and 30% ethylene glycol antifreeze (Antifreeze/Anticorrosion coolant) should be used for the purpose of corrosion protection and lubrication.**

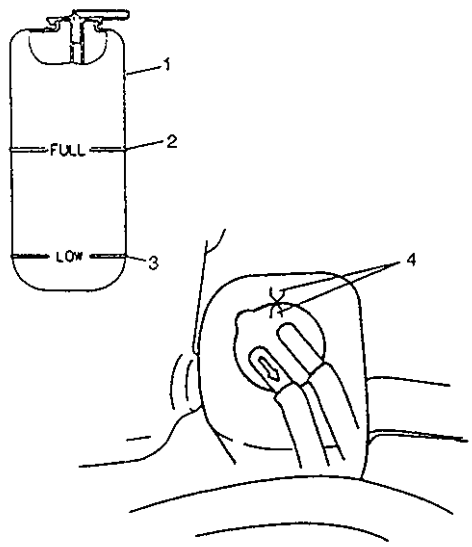

1. Reservoir tank
2. FULL level mark
3. LOW level mark
4. Arrow mark

COOLANT LEVEL

To check level, look at "see-through" reservoir tank.
It is not necessary to remove radiator cap to check coolant level.

WARNING:
To help avoid danger of being burned:
- **do not remove reservoir tank cap while coolant is "boiling", and**
- **do not remove radiator cap while engine and radiator are still hot.**

Scalding fluid and steam can be blown out under pressure if either cap is taken off too soon.

When engine is cool, check coolant level in reservoir tank.
A normal coolant level should be between "FULL" and "LOW" marks on reservoir tank.
If coolant level is below "LOW" mark, remove reservoir tank cap and add proper coolant to tank to bring coolant level up to "FULL" mark. Then, reinstall cap.

NOTE:
- **If proper quality antifreeze is used, there is no need to add extra inhibitors or additives that claim to improve system. They may be harmful to proper operation of system.**
- **When installing reservoir tank cap, set arrow marks on tank and cap as left figure.**

COOLING SYSTEM SERVICE

WARNING:
To help avoid danger of being burned, do not remove radiator cap while engine and radiator are still hot.
Scalding fluid and steam can be blown out under pressure if cap is taken off too soon.

Cooling system should be serviced as follows.
1) Check cooling system for leakage or damage.
2) Wash radiator cap and filler neck with clean water by removing radiator cap when engine is cold.
3) Check coolant for proper level and freeze protection.
4) Using a pressure tester, check system and radiator cap for proper pressure holding capacity 0.9 kg/cm^2 (12.8 psi, 90 kPa). If replacement of cap is required, use proper cap specified for this vehicle.

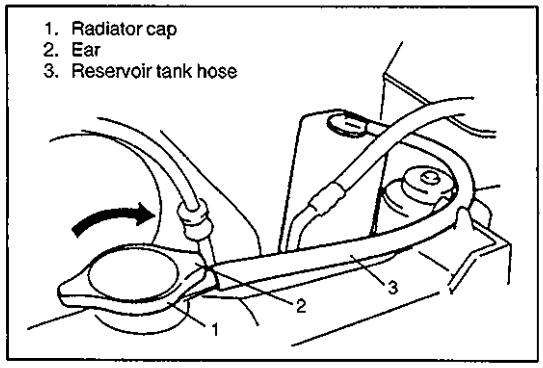

NOTE:
After installing radiator cap to radiator, make sure that its ear is aligned with reservoir tank hose as shown in figure. If not, turn cap more to align its ear with hose.

5) Tighten hose clamps and inspect all hoses.
Replace hoses whenever cracked, swollen or otherwise deteriorated.
6) Clean frontal area of radiator core.

COOLING SYSTEM FLUSH AND REFILL

1) Remove radiator cap when engine is cool:
Turn cap slowly to the left until it reaches a "stop" (Do not press down while turning it).
Wait until pressure is relieved (indicated by a hissing sound) then press down on cap and continue to turn it to the left.

WARNING:
To help avoid danger of being burned, do not remove radiator cap while engine and radiator are still hot. Scalding fluid and steam can be blown out under pressure if cap is taken off too soon.

2) With radiator cap removed, run engine until upper radiator hose is hot (this shows that thermostat is open and coolant is flowing through system).

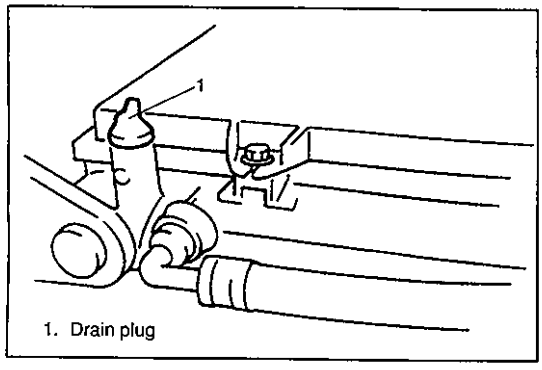

3) Stop engine and open radiator drain plug to drain coolant.
4) Close drain plug. Add water until system is filled and run engine until upper radiator hose is hot again.
5) Repeat steps 3 and 4 several times until drained liquid is nearly colorless.
6) Drain system and then close radiator drain plug tightly.

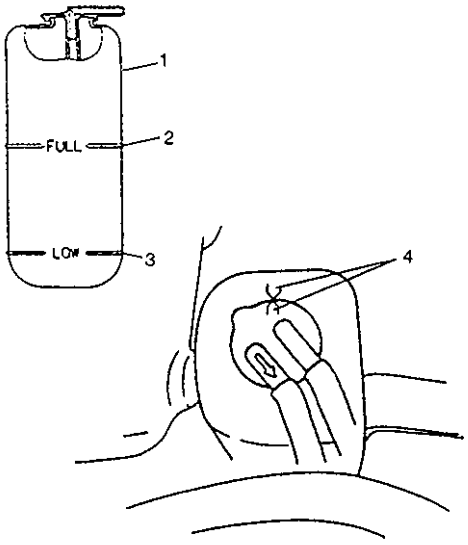

1. Reservoir tank
2. FULL level mark
3. LOW level mark
4. Arrow mark

7) Disconnect hose from water reservoir tank. Remove tank and pour out any fluid. Scrub and clean inside of tank with soap and water. Flush it well with clean water and drain.
   Reinstall tank and hose.
8) Add 50/50 mixture of good quality ethylene glycol antifreeze and water to radiator and tank.
   Fill radiator to the base of radiator filler neck and reservoir tank to "FULL" level mark. Reinstall reservoir tank cap setting the arrow marks on the tank and cap as left figure.
9) Run engine, with radiator cap removed, until radiator upper hose is hot.
10) With engine idling, add coolant to radiator until level reaches the bottom of filler neck. Install radiator cap, making sure that the ear of cap lines up with reservoir tank hose.

WATER PUMP BELT TENSION

WARNING:
Disconnect negative cable at battery before checking and adjusting belt tension.

1) Inspect belt for cracks, cuts, deformation, wear and cleanliness. If it is necessary to replace belt, refer to page 6B-14 for procedure.

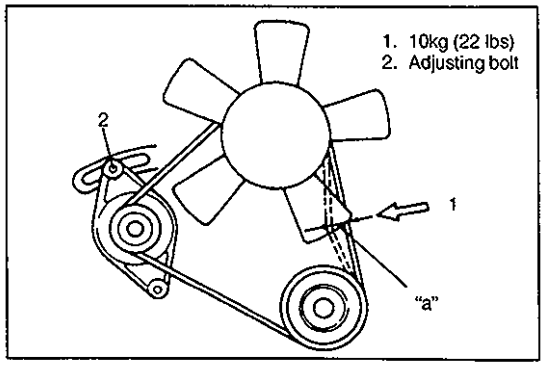

2) Check belt for tension. Belt is in proper tension when it deflects 6 to 8 mm (0.24 – 0.32 in.) under thumb pressure (about 10kg or 22 lb.).

Belt tension "a": 6 – 8 mm (0.24 – 0.32 in.)
as deflection/10 kg (22 lbs)

NOTE:
When replacing belt with a new one, adjust belt tension to 5 – 7 mm (0.20 – 0.27 in.).

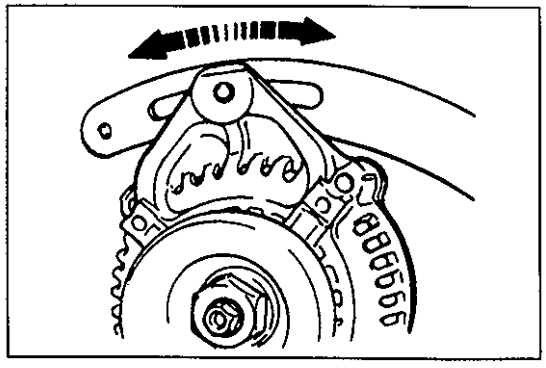

3) If belt is too tight or too loose, adjust it to proper tension by displacing generator position.
4) Tighten generator adjusting bolt and pivot bolts.
5) Connect negative cable at battery terminal.

ON-VEHICLE SERVICE

WARNING:
- **Check to make sure that engine coolant temperature is cold before removing any part of cooling system.**
- **Also be sure to disconnect negative cord from battery terminal before removing any part.**

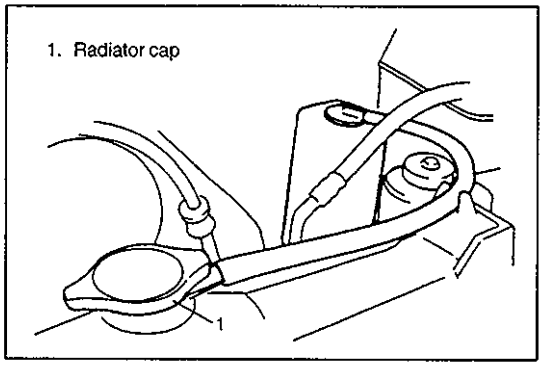

COOLANT DRAINING

1) Remove radiator cap.
2) Loosen drain plug on radiator to drain coolant.
3) After draining coolant, be sure to tighten drain plug securely.
4) Fill cooling system. (Refer to Item COOLANT of MAINTENANCE)

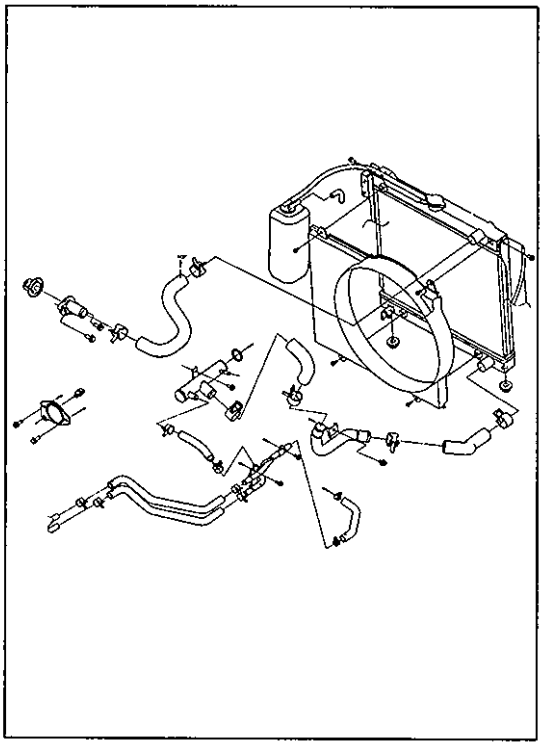

COOLING WATER PIPES OR HOSES

REMOVAL

1) Drain cooling system.
2) To remove these pipes or hoses, loosen screw on each pipe or hose clip and pull hose end off.

INSTALLATION

Install removed parts in reverse order of removal procedure, noting the following.
- Tighten each clamp bolt securely.
- Refill cooling system with proper coolant, referring to description on COOLANT of MAINTENANCE.

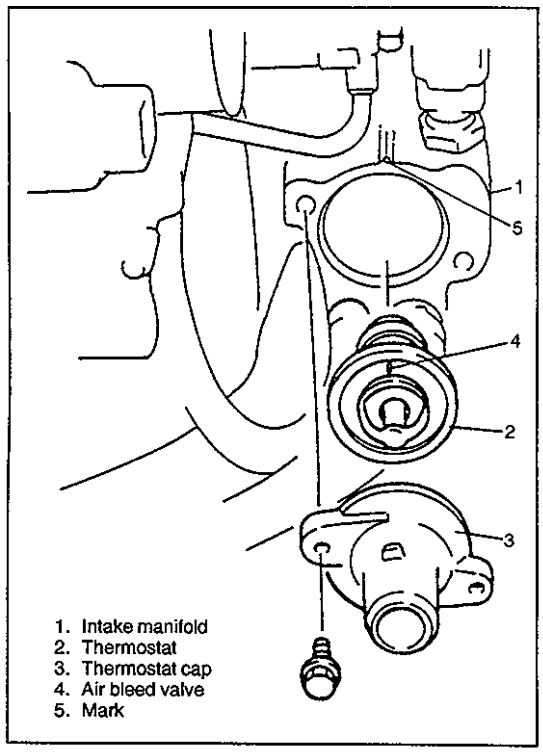

THERMOSTAT

REMOVAL

1) Drain cooling system and tighten drain plug.
2) Disconnect thermostat cap from intake manifold.
3) Remove thermostat.

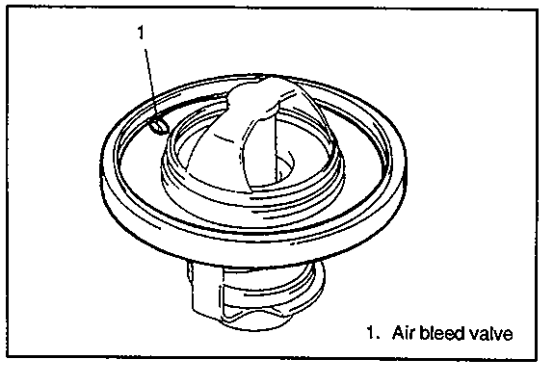

INSPECTION

1) Make sure that air bleed valve of thermostat is clear. Should this valve be clogged, engine would tend to overheat.
2) Check valve seat for some foreign matters being stuck which prevent valve from seating tight.

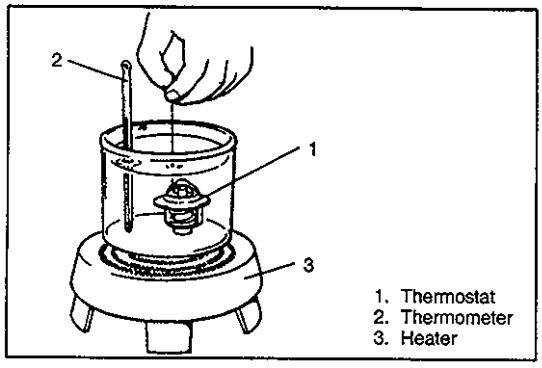

3) Check thermostatic movement of wax pellet as follows:
   - Immerse thermostat in water, and heat water gradually.
   - Check that valve starts to open at specification temp.
   - If valve starts to open at a temperature substantially below or above, thermostat unit should be replaced with a new one. Such a unit, if re-used, will bring about overcooling or overheating tendency.

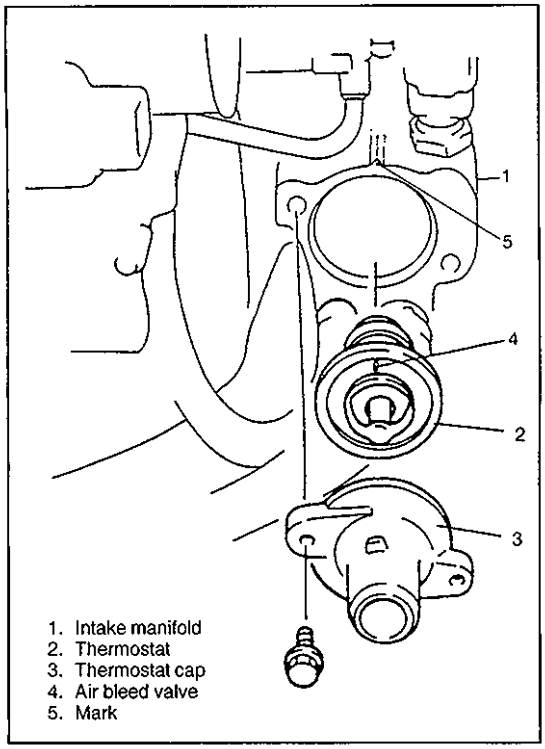

1. Intake manifold
2. Thermostat
3. Thermostat cap
4. Air bleed valve
5. Mark

INSTALLATION

1) When positioning the thermostat on the intake manifold, be sure to align its air breather valve with mark.
2) Install thermostat cap to intake manifold.
3) Fill the cooling system.

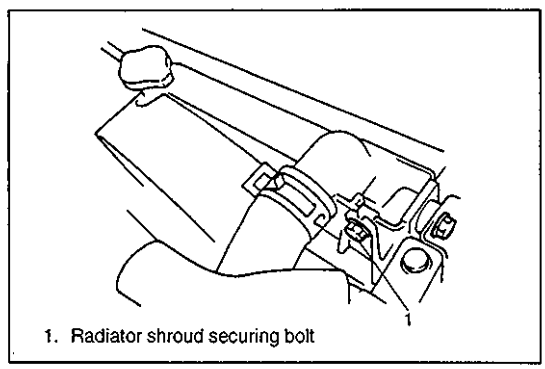

1. Radiator shroud securing bolt

WATER PUMP BELT AND COOLING FAN

REMOVAL

1) Remove radiator shroud securing bolts and cooling fan securing nuts.
2) Then remove radiator shroud and cooling fan at the same time.
3) Loosen water pump drive belt tension.
   When servicing vehicle equipped with A/C, remove compressor drive belt before removing water pump belt.
4) Remove pump belt.

INSTALLATION

Once cooling fan or water pump belt has been removed, make sure to tighten bolts and nuts securely in reinstallation and adjust pump belt tension to specification. (For specified tension, refer to p. 6B-11)

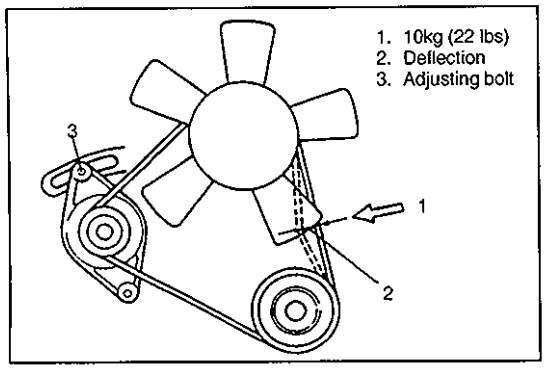

WATER PUMP BELT TENSION INSPECTION

1) Check belt tension. It should be within specification. Refer to page 6B-11.
2) If tension is out of specification, adjust it.
   For its adjustment, refer to WATER PUMP BELT TENSION on page 6B-11.
   After adjustment, be sure to tighten bolts.

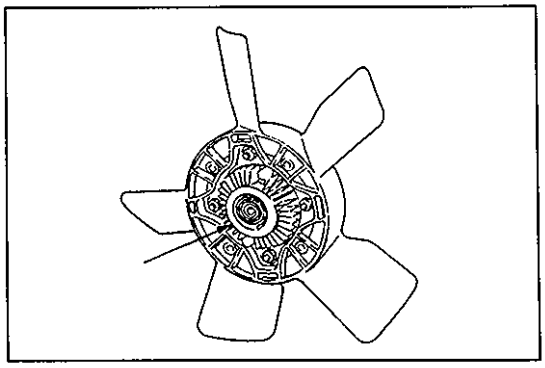

COOLING FAN CLUTCH INSPECTION

Inspect fluid coupling for oil leakage.
If necessary, replace fan clutch assembly. Do not disassemble clutch assembly.

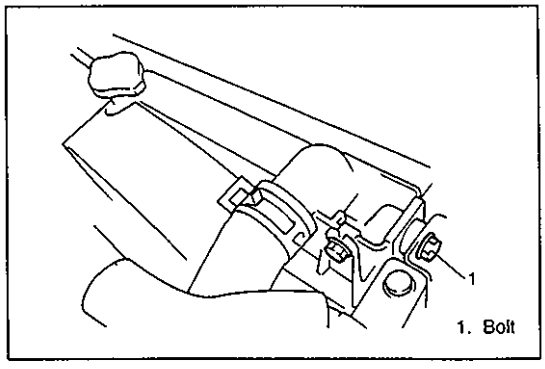

RADIATOR

REMOVAL

1) Drain cooling system.
2) Loosen water pump drive belt tension.
3) Remove radiator shroud and cooling fan at the same time.
4) Disconnect water hoses from radiator.
5) With automatic transmission (A/T) vehicle, disconnect additional 2 fluid hoses from radiator.
   Place some container under radiator to receive A/T fluid which will flow out when hose is disconnected.
6) Remove radiator after removing 2 bolts.

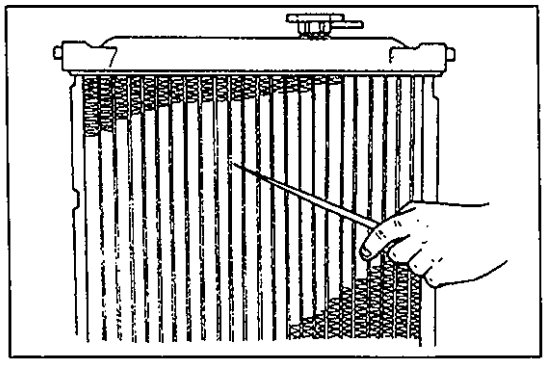

INSPECTION

If the water side of the radiator is found excessively rusted or covered with scales, clean it by flushing with the radiator cleaner compound.
This flushing should be carried out at regular intervals for scale or rust formation advances with time even where a recommended type of coolant is used. Periodical flushing will prove more economical.
Inspect the radiator cores and straighten the flattened or bent fins, if any. Clean the cores, removing road grimes and trashes.
Excessive rust or scale formation on the wet side of the radiator lowers the cooling efficiency.
Flattened or bent fins obstruct the flow of air through the core to impede heat dissipation.

Radiator flushing interval	Two years (recommended)

INSTALLATION
Reverse removal procedures.

NOTE:
- **Refill cooling system with proper coolant referring to COOLANT item of MAINTENANCE.**
- **With automatic transmission car, fill A/T fluid up to specified level. (For procedure to check A/T fluid and its level, refer to SECTION 7B.)**
- **After installation, check each joint for leakage.**

WATER PUMP

REMOVAL
1) Drain cooling system.
2) Remove the radiator shroud and cooling fan at the same time.
3) Loosen water pump drive belt tension.
   Then remove water pump pulley and pump drive belt.
4) Remove crankshaft pulley by removing pulley bolts. Crankshaft timing belt pulley bolt at the center is needs not to be loosened.

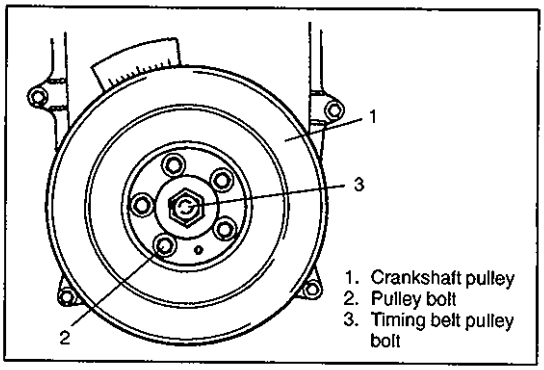

5) Remove timing belt outside cover.

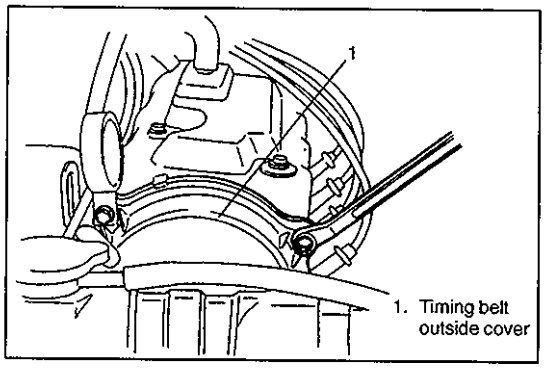

6) Loosen tensioner bolt and stud, and remove belt from crank timing belt pulley and camshaft pulley after pushing up tensioner plate fully with finger as shown in Figure.

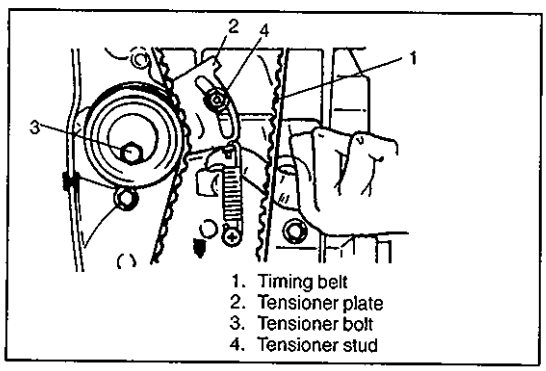

7) Remove timing belt tensioner, plate and spring.
8) Remove water pump assembly.

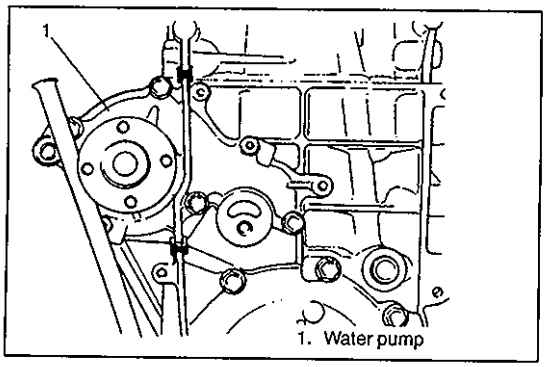

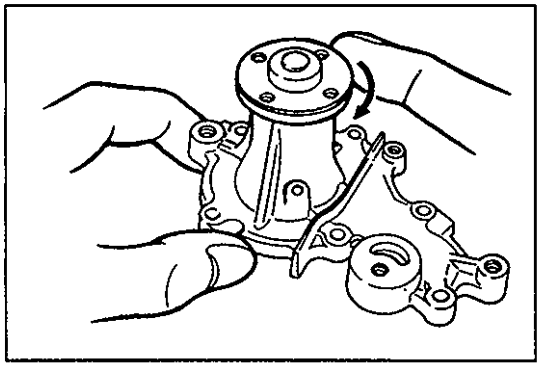

INSPECTION

NOTE:
Do not disassemble water pump.
If any repair is required on pump, replace it as assembly.

- Rotate water pump by hand to check for smooth operation.
  If pump does not rotate smoothly or makes an abnormal noise, replace it.

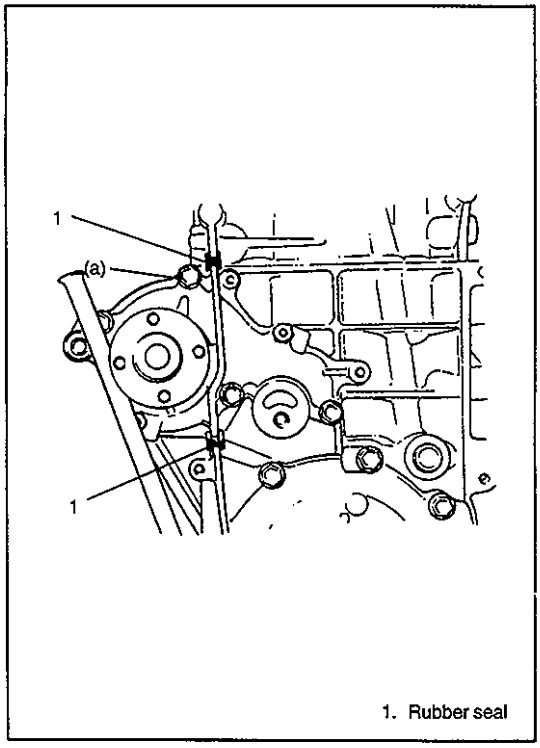

1. Rubber seal

INSTALLATION

1) Install new pump gasket to cylinder block.
2) Install water pump to cylinder block.

   Tightening Torque
   (a): 10 N·m (1.0 kg-m, 7.5 lb-ft)

3) After installing water pump, install rubber seal between water pump and oil pump, and another between water pump and cylinder head.

4) Install belt tensioner plate, tensioner, tensioner spring, timing belt and timing belt outside cover.

   NOTE:
   - **Special care must be used when installing belt tensioner and timing belt. Be sure to refer to SECTION 6A "TIMING BELT" of this manual.**
   - **Torque each bolt and nut to specification.**

5) Install crankshaft pulley, water pump pulley, pump drive belt, cooling fan and radiator shroud.
6) Adjust intake and exhaust valve lashes.
   (For adjustment and related data, refer to SECTION 6A of this manual).
7) Adjust water pump belt tension.
   (Refer to p. 6B-11).
8) Connect negative cable at battery.
9) Fill the cooling system.

TIGHTENING TORQUE SPECIFICATION

FASTENING PARTS	TIGHTENING TORQUE		
	N·m	kg-m	lb-ft
Water pump bolt	10	1.0	7.5

REQUIRED SERVICE MATERIAL

MATERIALS	RECOMMENDED SUZUKI PRODUCT	USE
Engine coolant (Ethylene glycol base coolant)	Anti-freeze/Anti-corrosion coolant	Additive to engine cooling system for improving cooling efficiency and for protection against rusting.

SECTION 6C

ENGINE FUEL

CONTENTS

GENERAL DESCRIPTION 6C- 2
- Fuel System 6C- 2
- Fuel Tank 6C- 2
- Fuel Pump Assembly (with fuel filter, fuel level gauge and fuel cut valve) 6C- 3
- Fuel Filler Cap 6C- 3

ON-VEHICLE SERVICE 6C- 4
- Fuel Lines 6C- 4
- Fuel Filler Cap 6C- 4
- Fuel Tank 6C- 5
- Fuel Pump Assembly (with fuel filter, fuel level gauge and fuel cut valve) 6C- 7

TIGHTENING TORQUE SPECIFICATION . 6C- 9

SPECIAL TOOL 6C- 9

CAUTION:
AMONG THE CARS OF THIS MODEL, THERE ARE THOSE EQUIPPED WITH A CATALYTIC CONVERTER AND THOSE WITHOUT ONE DEPENDING ON STATUTORY REGULATIONS OF EACH COUNTRY. FOR THOSE WITH A CATALYTIC CONVERTER, BE SURE TO USE UNLEADED FUEL ONLY. USE OF LEADED AND/OR LOW LEAD FUEL CAN RESULT IN ENGINE DAMAGE AND REDUCE THE EFFECTIVENESS OF THE EMISSION CONTROL SYSTEM.

GENERAL DESCRIPTION

FUEL SYSTEM

The main components of the fuel system are fuel tank, fuel pump assembly (with fuel filter and fuel level gauge and fuel cut valve), fuel feed line, fuel return line and fuel vapor line.
For the details of fuel flow and fuel vapor flow, refer to "ENGINE AND EMISSION CONTROL SYSTEM" section.

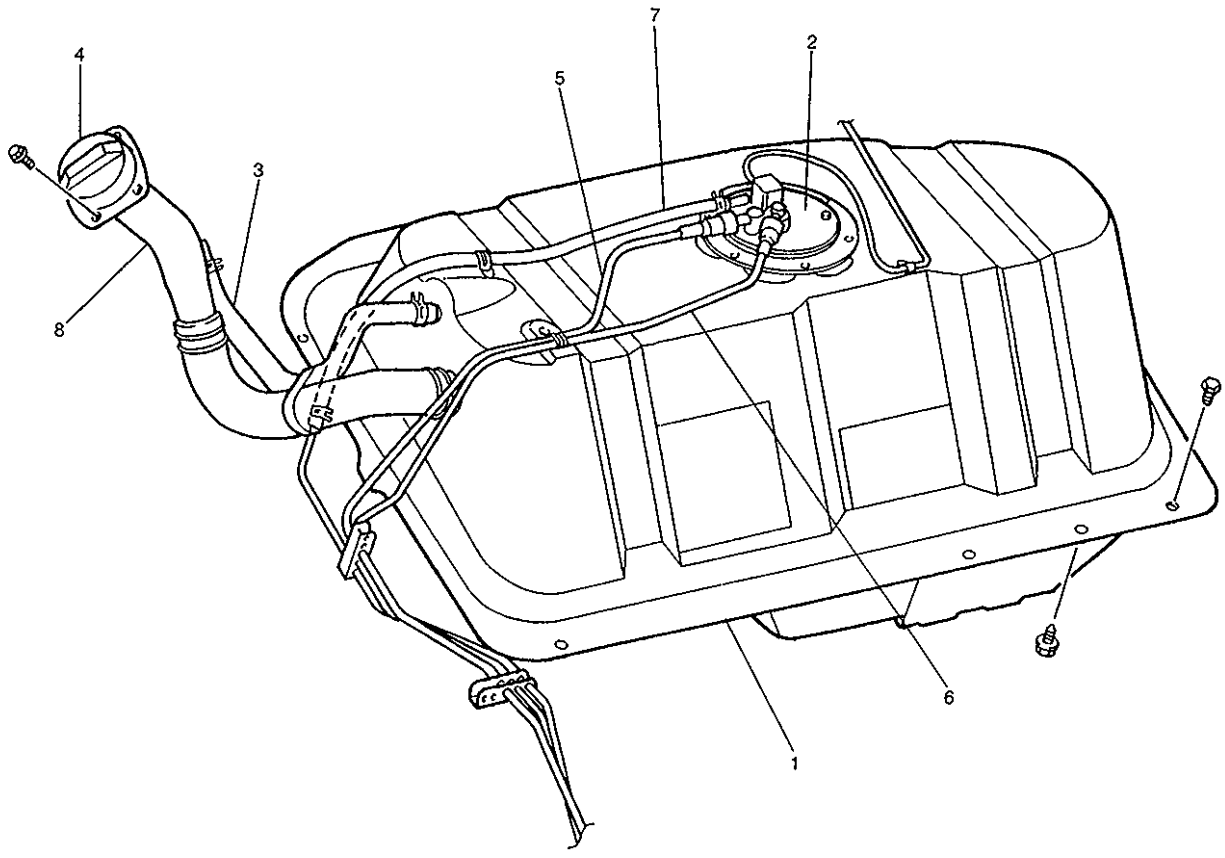

1. Fuel tank
2. Fuel pump assembly
3. Breather hose
4. Fuel filler cap
5. Fuel feed line
6. Fuel return line
7. Fuel vapor line
8. Fuel filler neck

FUEL TANK

The fuel tank is located under the rear section of the vehicle. The fuel pump assembly is installed in fuel tank. Whenever servicing the fuel pump assembly, the fuel tank must be removed from the vehicle.

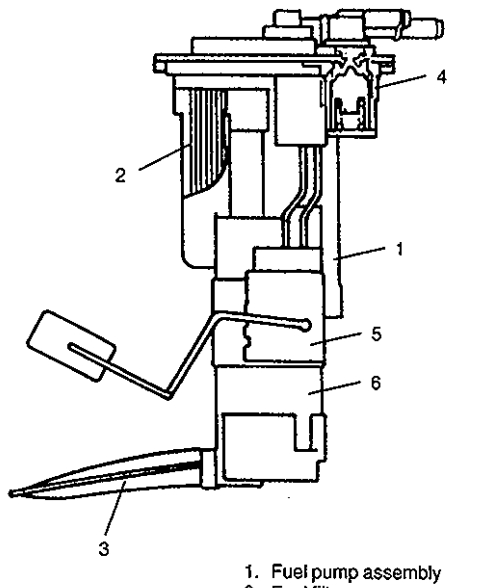

1. Fuel pump assembly
2. Fuel filter
3. Suction filter (pump filter)
4. Fuel cut valve
5. Fuel sender (level) gauge
6. Fuel pump

FUEL PUMP ASSEMBLY (WITH FUEL FILTER, LEVEL GAUGE (SENSOR) AND FUEL CUT VALVE)

The fuel pump assembly consists of fuel pump, fuel filter, fuel sender (level) gauge (sensor) and fuel cut valve.

Fuel Pump

For structure and operation of the fuel pump, refer to Section 6E.

Fuel Cut Valve

The fuel cut valve consists of a float and a spring. It allows only the fuel vapor to flow into the canister and prevents the fuel from flowing into the canister.

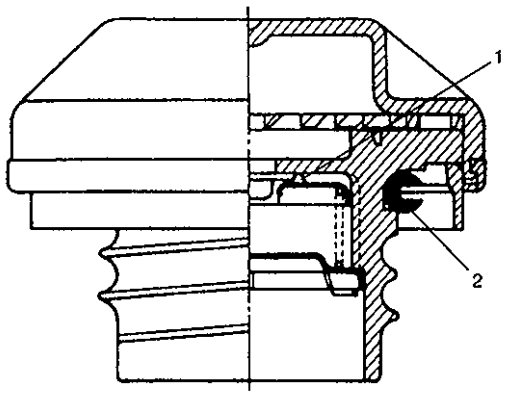

1. Vacuum relief valve
2. Gasket

FUEL FILLER CAP

The fuel tank filler neck has a vacuum cap.
A ratchet tightening device on the threaded fuel filler cap reduces the chances of incorrect installation, which would prevent sealing fuel vapors.
After the gasket on fuel filler cap and the filler neck flange contact, the ratchet produces a loud clicking noise, indicating the seal has been set.
This cap has a vacuum relief valve inside.
The vacuum relief valve opens to relieve the vacuum created in the fuel tank.

ON-VEHICLE SERVICE

Before work, refer to PRECAUTION ON FUEL SYSTEM SERVICE in SECTION 0A.

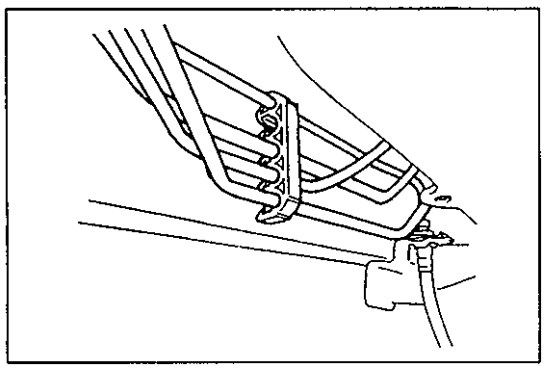

FUEL LINES

Due to the fact that fuel feed line is under high pressure, use special care when servicing it.

INSPECTION

Visually inspect fuel lines for evidence of fuel leakage, hose crack and deterioration, or damage. Make sure all clamps are secure. Replace parts as needed.

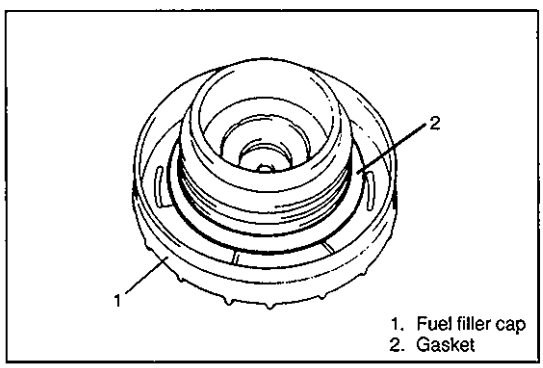

1. Fuel filler cap
2. Gasket

FUEL FILLER CAP

Remove cap, and check gasket for even filler neck imprint, and deterioration or any damage. If gasket is in malcondition, replace cap.

NOTE:

If cap requires replacement, only a cap with the same features should be used. Failure to use correct cap can result in critical malfunction of system.

FUEL TANK

REMOVAL

WARNING:
Refer to the WARNING at the beginning of ON-VEHICLE SERVICE in this section.

1) Relieve fuel pressure in fuel feed line according to procedure described in Section 6.
2) Disconnect negative cable at battery.

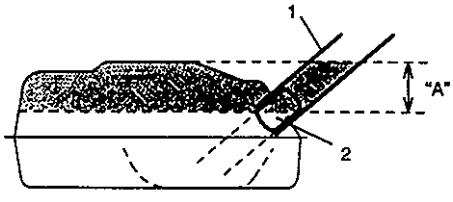

1. Fuel filler hose
2. Fuel tank inlet (check) valve

3) Remove fuel filler cap.
4) Insert hose of a hand operated pump into fuel filler hose and drain fuel in space "A" in the figure (drain fuel through it till fuel stops).

CAUTION:
Do not force hose of a hand operated pump into fuel tank. Doing so can damage inlet valve.

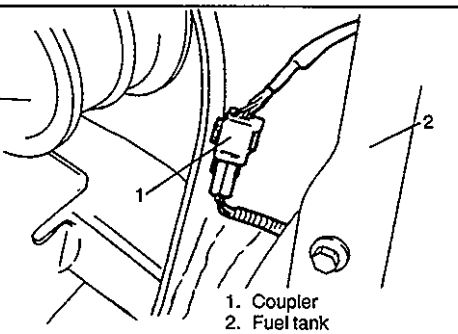

1. Coupler
2. Fuel tank
3. Rear suspension coil spring

5) Hoist vehicle.
6) Remove exhaust center pipe (refer to SECTION 6K) and rear propeller shaft (refer to SECTION 4B).
7) Disconnect coupler for fuel pump assembly.
(The coupler is by left rear suspension coil spring.)
8) Remove fuel tank filler hose protector.
Disconnect filler hose and breather hose from fuel filler neck.
9) Disconnect fuel vapor hose from pipe.

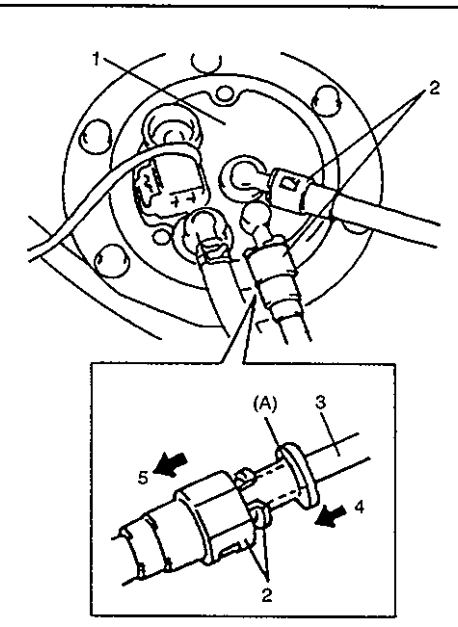

1. Fuel pump assembly
2. Quick joint
3. Pipe
4. Insert special tool
5. Disconnect joint

10) With fuel tank supported on a jack, remove fuel tank bolts.
11) Lower fuel tank a little and hold it. Unclamp fuel hoses and disconnect them from fuel pump assembly.
When disconnecting joint of fuel feed line and return line from pipe, unlock joint by inserting special tool between pipe and joint lock first.

Special Tool
(A): 09919-47020

WARNING:
Keep fuel tank horizontally and stably when removing it. Fuel may come out if tank is tilted. Also, fuel tank may drop and cause personal injury.

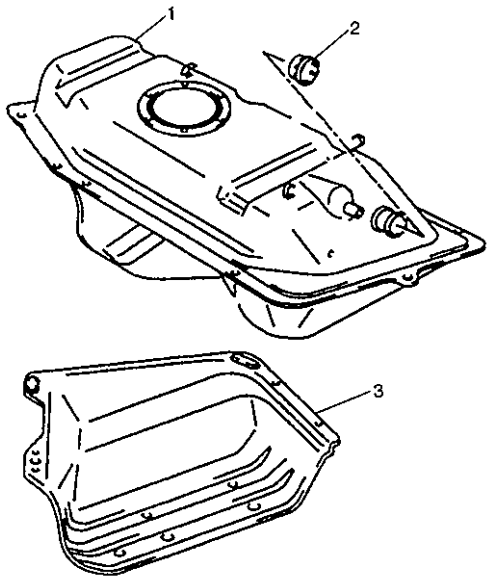

1. Fuel tank
2. Inlet valve
3. Fuel tank protector

12) Remove fuel tank from vehicle. Remove fuel tank protector and inlet valve as neccesary.

WARNING:
Keep fuel tank horizontally and stably when removing it. Fuel may come out if tank is tilted. Also, fuel tnak may drop and cause personal injury.

FUEL TANK PURGING PROCEDURE

CAUTION:
This purging procedure will NOT remove all fuel vapor. DO not attempt any repair on tank where heat or flame is required, as an explosion resulting in personal injury could occur.

The following procedure is used for purging the fuel tank.

1) After removing fuel tank, remove all hoses and fuel pump assembly from fuel tank.
2) Drain all remaining fuel from tank.
3) Move tank to flushing area.
4) Fill tank with warm water or tap water, and agitate vigorously and drain. Repeat this washing until inside of tank is clean. Replace tank if its inside is rusty.
5) Completely flush out remaining water after washing.

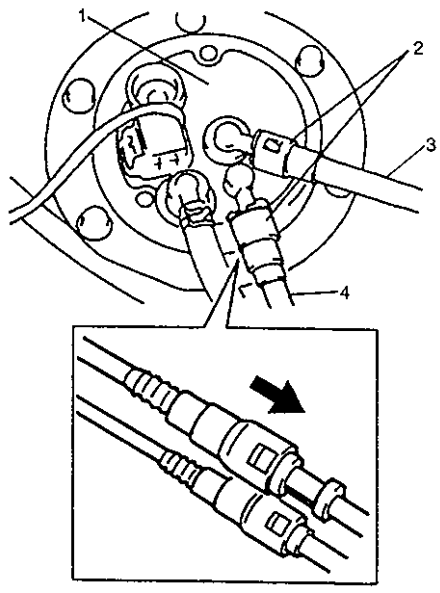

1. Fuel pump assembly
2. Quick joint
3. Fuel return hose
4. Fuel feed hose

INSTALLATION

1) Install fuel pump assembly to fuel tank. Refer to "FUEL PUMP ASSEMBLY" in this section. Install protector to fuel tank.
2) Install inlet valve to fuel tank.
   If deformed or damaged in any other way, replace with a new one.
3) Connect fuel filler and breather hoses to fuel tank and vapor hose to fuel pump assembly. Clamp them securely.
4) Lift up fuel tank on jack.
   Connect fuel feed and return hoses to pipes as shown in figure and clamp them securely.

CAUTION:
When connecting joint, clean outside surfaces of pipe where joint is to be inserted, push joint into pipe till joint lock clicks and check to ensure that pipes are connected securely, or fuel leak may occur.

5) Install fuel tank to vehicle and connect wire harness coupler.
6) Connect fuel filler hose and breather hose to fuel filler neck. Connect fuel vapor hose to pipe. Clamp them securely.
7) Install fuel filler hose protector.

FUEL PUMP ASSEMBLY (WITH FUEL FILTER, FUEL LEVEL GAUGE AND FUEL CUT VALVE)

WARNING:
Refer to the WARNING at the beginning of ON-VEHICLE SERVICE in this section.

REMOVAL

1) Remove fuel tank from vehicle. Refer to "FUEL TANK REMOVAL" in this section.
2) Disconnect wire harness coupler and fuel vapor hose from fuel pump assembly.
3) Remove fuel pump assembly from fuel tank by removing bolts.

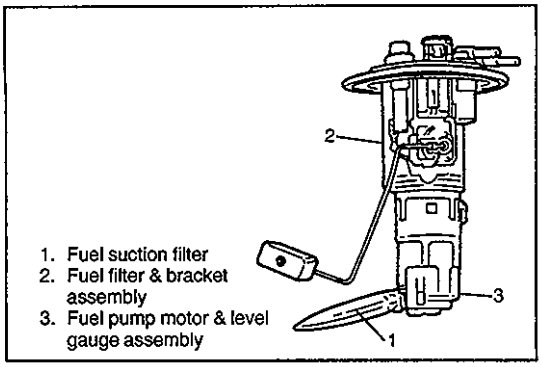

1. Fuel suction filter
2. Fuel filter & bracket assembly
3. Fuel pump motor & level gauge assembly

INSPECTION

Check fuel pump assembly for damage.
Check fuel suction filter for evidence of dirt and contamination. If present, replace or clean and check for presence of dirt in fuel tank.
For inspection of fuel pump itself, refer to Section 6E of this manual.
For inspection of fuel level gauge, refer to Section 8 of this manual.

DISASSEMBLY/REASSEMBLY

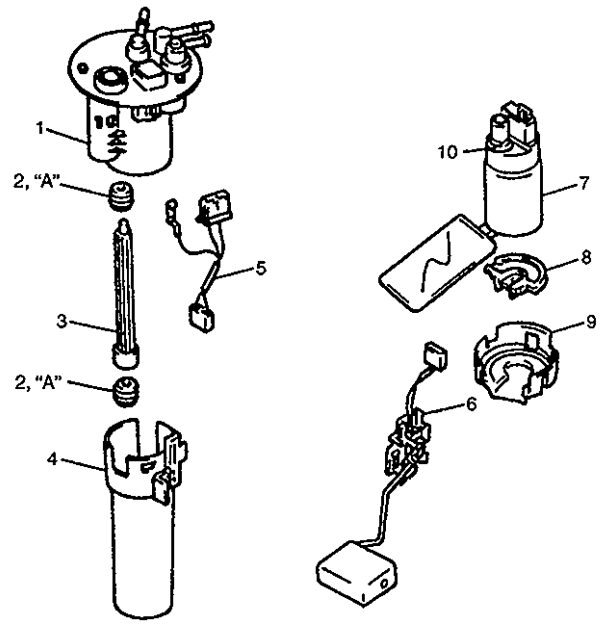

"A": Apply oil
1. Bracket sub assembly (including fuel filter)
2. Grommet
3. Tube
4. Housing
5. Lead wire
6. Fuel level gauge (Fuel sender gauge)
7. Fuel pump
8. Cushion
9. Bracket
10. Spacer

[Removal]

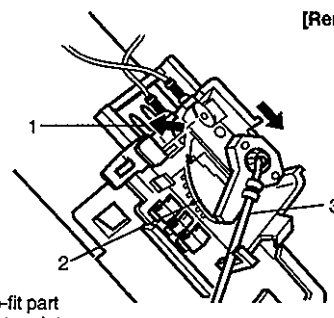

1. Snap-fit part
2. Resistor plate
3. Float arm

[Installation]

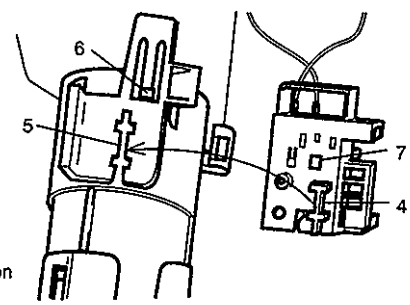

4. Protrusion
5. Groove
6. Lug
7. Window

CAUTION:

- **While removing fuel level gauge, do not contact resistor plate or deform arm. It may cause fuel level gauge to fail.**
- **When removing grommet from fuel tube or bracket sub assembly, be very careful not to cause damage to grommet installed section (sealed section in bore). Should it be damaged, replace it with new one, or fuel will leak from that part.**

NOTE

- **When removing fuel level gauge, press snap-fit part and slide it in the arrow direction as shown in figure.**
- **When installing fuel level gauge to housing, fit protrusion of fuel level gauge in groove in housing and slide it up till lug fits in window securely. Refer to figure shown left.**

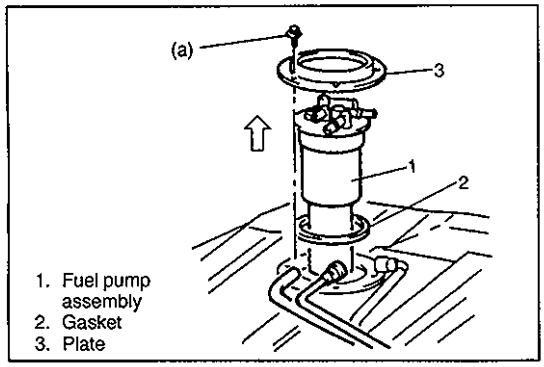

1. Fuel pump assembly
2. Gasket
3. Plate

INSTALLATION

1) Clean mating surfaces of fuel pump assembly and fuel tank.
2) Install new gasket and plate to fuel pump assembly then install fuel pump assembly to fuel tank.

Tightening Torque
(a): 10 N·m (1.0 kg-m, 7.5 lb-ft)

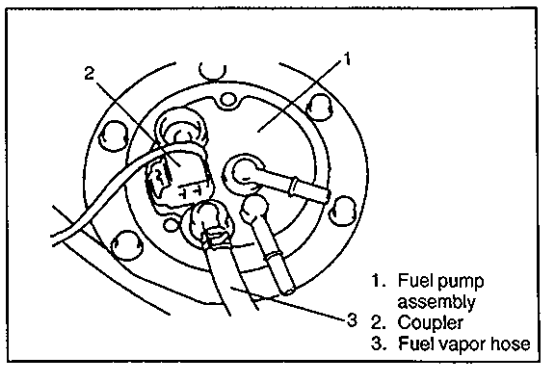

1. Fuel pump assembly
2. Coupler
3. Fuel vapor hose

3) Connect wire horness coupler and fuel vapor hose to fuel pump assembly.

4) Install fuel tank to vehicle. Refer to FUEL TANK INSTALLATION in this section.

TIGHTENING TORQUE SPECIFICATION

Fastening parts	Tightening torque		
	N.m	kg-m	lb-ft
Fuel pump assembly bolt	10	1.0	7.5

SPECIAL TOOL

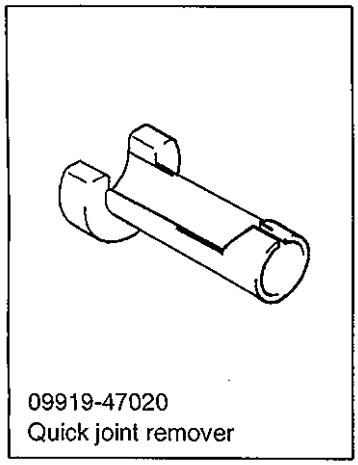
09919-47020
Quick joint remover

SECTION 6E

ENGINE AND EMISSION CONTROL SYSTEM

WARNING:
For vehicles equipped with Supplement Restraint (Air Bag) System:

- **Service on and around the air bag system components or wiring must be performed only by an authorized SUZUKI dealer. Refer to "Air Bag System Components and Wiring Location View" under "General Description" in air bag system section in order to confirm whether you are performing service on or near the air bag system components or wiring. Please observe all WARNINGS and "Service Precautions" under "On-Vehicle Service" in air bag system section before performing service on or around the air bag system components or wiring. Failure to follow WARNINGS could result in unintentional activation of the system or could render the system inoperative. Either or these two conditions may result in severe injury.**
- **Technical service work must be started at least 90 seconds after the ignition switch is turned to the "LOCK" position and the negative cable is disconnected from the battery. Otherwise, the system may be activated by reserve energy in the Sensing and Diagnostic Module (SDM).**

NOTE:
Whether following systems (parts) are used in the particular vehicle or not depends on specifications. Be sure to bear this in mind when performing service work.

- **EGR valve**
- **Evaporative emission control system**
- **Heated oxygen sensor or CO adjusting resistor**
- **Three way catalytic converter**

CONTENTS

GENERAL DESCRIPTION 6E- 3
AIR INTAKE SYSTEM 6E- 6
FUEL DELIVERY SYSTEM 6E- 6
ELECTRONIC CONTROL SYSTEM 6E- 7
DIAGNOSIS 6E-11
On-Board Diagnostic System 6E-11
Precautions in Diagnosing Troubles 6E-11
Malfunction Indicator Lamp (MIL) Check ... 6E-12
DTC Check 6E-12
DTC Clearance 6E-13
DTC Table 6E-14
A-1 MIL Circuit Check (MIL does not light) 6E-15
A-2 MIL Circuit Check (MIL flashes) 6E-15
A-3 MIL Circuit Check (MIL remains ON) 6E-15
A-4 ECM Power and Ground Circuit Check 6E-15
Code No.13 Heated Oxygen Sensor Circuit 6E-18
Code No.14 ECT Sensor Circuit 6E-19
Code No.15 ECT Sensor Circuit 6E-19
Code No.21 TP Sensor Circuit 6E-20
Code No.22 TP Sensor Circuit 6E-20
Code No.23 IAT Sensor Circuit 6E-21
Code No.25 IAT Sensor Circuit 6E-21
Code No.24 VSS (Vehicle Speed Sensor) Circuit 6E-22
Code No.31 MAP Sensor Circuit 6E-23
Code No.32 MAP Sensor Circuit 6E-23
Code No.37 ABS Signal Circuit 6E-24
Code No.42 CMP Sensor Circuit 6E-25

DTC Confirmation Procedure 6E-26
B-1 Fuel Pump Circuit Check 6E-27
B-2 Fuel Injector Circuit Check 6E-28
B-3 Fuel Pressure Check 6E-29
B-4 Idle Air Control System Check 6E-31
B-5 EVAP Control System Check 6E-33
B-6 EGR System Check (if equipped) 6E-34
B-7 A/C Signal Circuit Check 6E-35
B-8 A/C Condenser Fan Motor Relay Control System Check 6E-36
B-9 Fuel Cut Operation Check 6E-37
Inspection of ECM and Its Circuit 6E-38
ON-VEHICLE SERVICE 6E-41
General 6E-42
Accelerator Cable Adjustment 6E-42
Idle Speed / Idle Air Control Duty Inspection 6E-42
Idle Mixture Inspection/Adjustment 6E-44
AIR INTAKE SYSTEM 6E-45
Throttle Body (On-vehicle inspection, Removal and Installation) 6E-45
Idle Air Control Valve (Removal, Inspection and Installation) 6E-46
FUEL DELIVERY SYSTEM 6E-47
Fuel Pressure Inspection 6E-47
Fuel Pump (On-vehicle inspection, Removal, Inspection and Installation) 6E-48
Fuel Pressure Regulator (Removal and Installation) 6E-49
Fuel Injector (On-vehicle inspection, Removal, Inspection and Installation) 6E-50
ELECTRONIC CONTROL SYSTEM 6E-53
ECM (Removal and Installation) 6E-53
MAP Sensor (Inspection, Removal and Installation) 6E-53
IAT Sensor 6E-54
ECT Sensor (Removal, Inspection and Installation) 6E-54
TP Sensor (Inspection, Removal and Installation) 6E-55
HO2S (Removal and Installation) 6E-56
Vehicle Speed Sensor (Inspection) 6E-57
Camshaft Position Sensor 6E-58
CMP Sensing Rotor (Inspection) 6E-59
Main Relay (Inspection) 6E-59
Fuel Pump Relay (Inspection) 6E-60
Fuel Cut Operation (Inspection) 6E-60
A/C Signal, A/C ON Signal, A/C Condenser Fan Motor Relay Control System (Inspection) 6E-60
EMISSION CONTROL SYSTEM 6E-61
EGR System (if equipped) 6E-61
Evaporative Emission Control System 6E-62
PCV System 6E-65
TIGHTENING TORQUE SPECIFICATIONS 6E-66
SPECIAL TOOLS 6E-66

GENERAL DESCRIPTION

The engine and emission control system has 4 major sub-systems: air intake system, fuel delivery system, electronic control system and emission control system.

Air intake system includes air cleaner, throttle body, idle air control valve and intake manifold.

Fuel delivery system includes fuel pump, delivery pipe, fuel pressure regulator, fuel injectors, etc.

Electronic control system includes ECM, various sensors and controlled devices.

Emission control system includes EGR, EVAP and PCV systems.

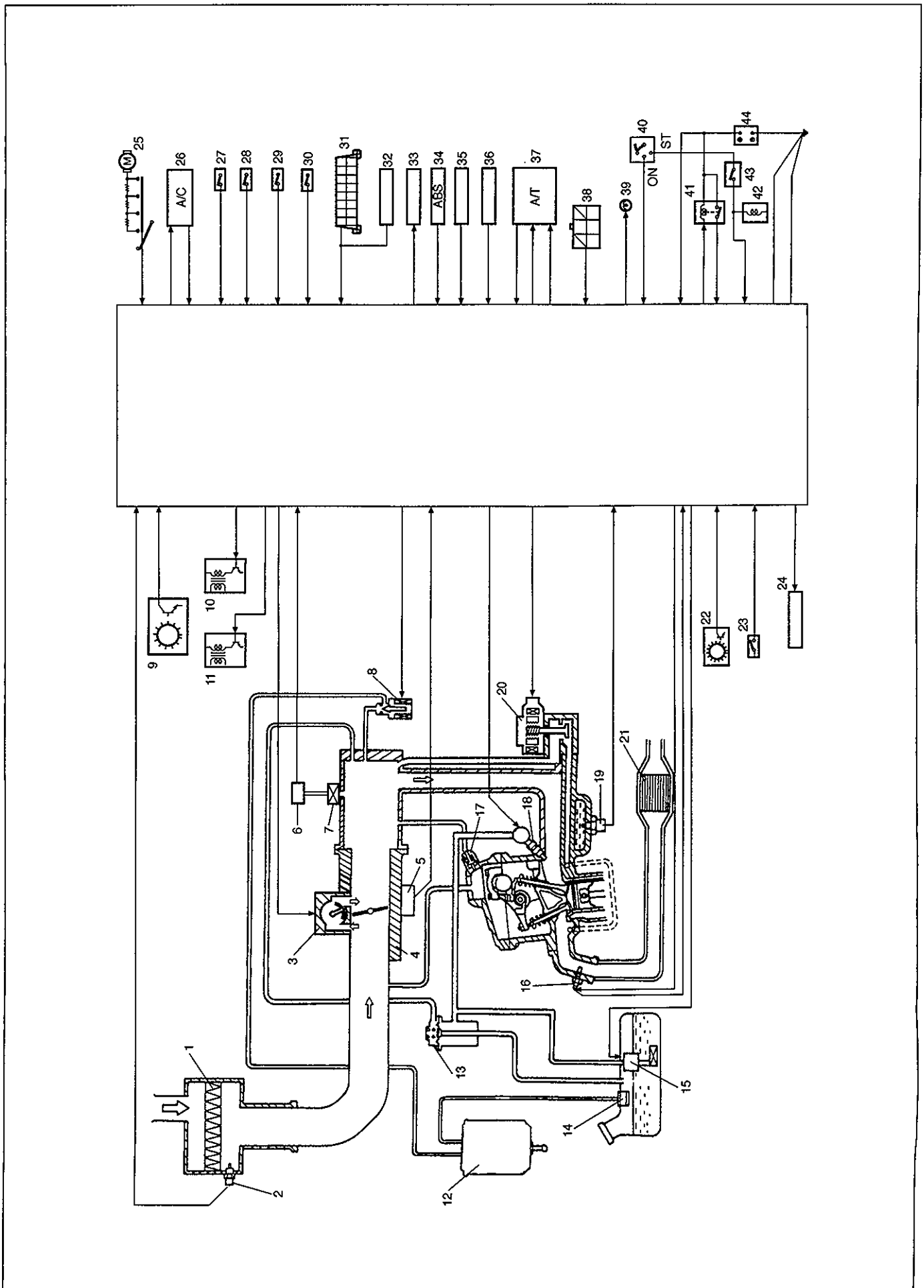
A/C
ABS
A/T
ON
ST

1. Air cleaner
2. Intake air temp. sensor
3. Idle air control valve
4. Throttle body
5. Throttle position sensor
6. Manifold absolute pressure sensor
7. Filter
8. EVAP canister purge valve (if equipped)
9. Camshaft position sensor
10. Ignition coil assembly for No.1 and No.4 spark plug
11. Ignition coil assembly for No.2 and No.3 spark plug
12. EVAP canister (if equipped)
13. Fuel pressure regulator
14. Tank pressure control valve
15. Fuel pump
16. Heated oxygen sensor (if equipped)
17. PCV valve
18. Fuel injector
19. Engine coolant temp. sensor
20. EGR valve (if equipped)
21. Three way catalytic converter (if equipped)
22. Vehicle speed sensor
23. Power steering pressure switch (if equipped)
24. A/C condenser fan (if equipped)
25. Heater blower fan switch
26. A/C control module (if equipped)
27. Lighting switch
28. Stop lamp switch
29. Rear defogger switch
30. "R" range switche (A/T)
31. Data link connector
32. Immobilizer control module (if equipeed)
33. Tachometer (if equipped)
34. ABS control module (if equipped)
35. Ignition timing adjusting resistor
36. CO adjusting resistor (if equipped)
37. A/T control module (A/T)
38. Monitor coupler
39. Malfunction indicator lamp
40. Ignition switch
41. Main relay
42. Starter magnetic switch
43. Park/Neutral position switch in TR switch (A/T)
44. Battery

AIR INTAKE SYSTEM

The main components of the air intake system are air cleaner, air cleaner outlet hose, throttle body, idle air control valve and intake manifold.

The air (by the amount corresponding to the throttle valve opening and engine speed) is filtered by the air cleaner, passes through the throttle body, is distributed by the intake manifold and finally drawn into each combustion chamber.

When the idle air control valve is opened according to the signal from ECM, the air bypasses the throttle valve through bypass passage and is finally drawn into the intake manifold.

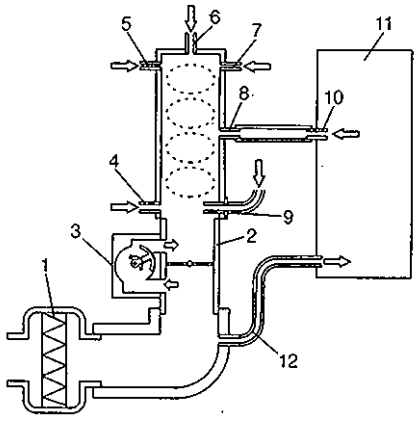

1. Air cleaner
2. Throttle body
3. IAC valve
4. Union (EVAP purge)
5. Union (Air lock hub control valve)
6. Union (Brake booster)
7. Union (Fuel pressure regulator)
8. Union (PCV)
9. EGR pipe
10. PCV valve
11. Cylinder head cover
12. Breather hose

FUEL DELIVERY SYSTEM

The fuel delivery system consists of the fuel tank, fuel pump, fuel filter, fuel pressure regulator, delivery pipe and fuel injectors.

The fuel in the fuel tank is pumped up by the fuel pump, filtered by the fuel filter and fed under pressure to each injector through the delivery pipe.

As the fuel pressure applied to the injector (the fuel pressure in the fuel feed line) is always kept a certain amount higher than the pressure in the intake manifold by the fuel pressure regulator, the fuel is injected into the intake port of the cylinder head when the injector opens according to the injection signal from ECM.

The fuel relieved by the fuel pressure regulator returns through the fuel return line to the fuel tank.

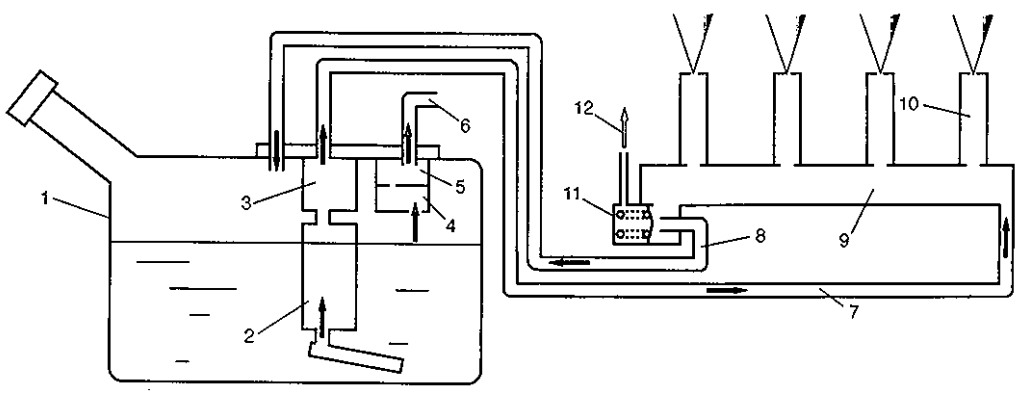

1. Fuel tank
2. Fuel pump
3. Fuel filter
4. Fuel cut valve
5. Fuel tank pressure control valve
6. To EVAP canister
7. Fuel feed line
8. Fuel return line
9. Fuel delivery pipe
10. Fuel injector
11. Fuel pressure regulator
12. To intake manifold (vacuum passage)

ELECTRONIC CONTROL SYSTEM

The electronic control system consists of 1) various sensors which detect the state of engine and driving conditions, 2) ECM which controls various devices according to the signals from the sensors and 3) various controlled devices.

Functionally, it is divided into the following sub systems:

- Main relay control system
- Fuel injection control system
- Heated oxygen sensor heater control system (if equipped)
- Idle air control system
- Fuel pump control system
- Evaporative emission control system (if equipped)
- Ignition control system
- EGR system (if equipped)

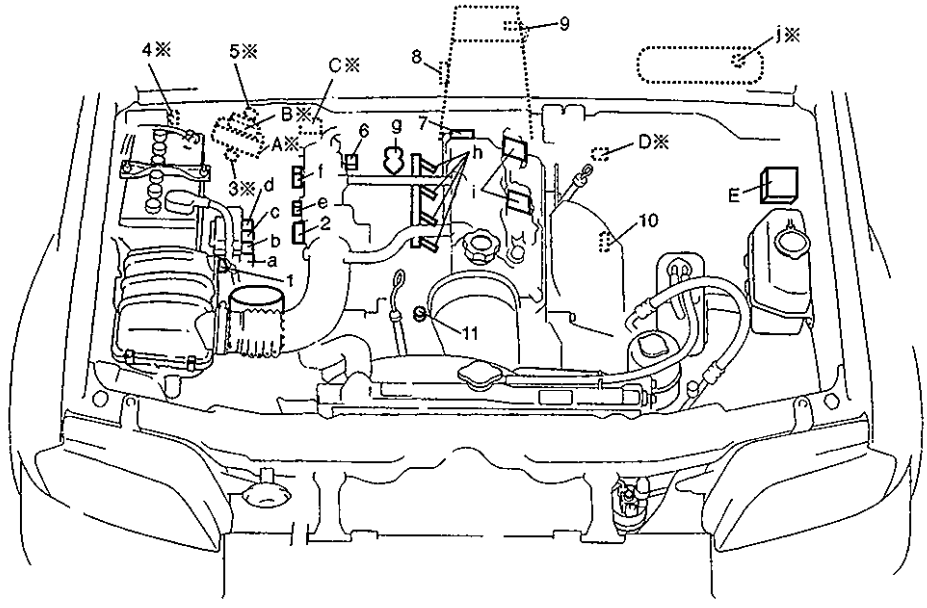

1. IAT sensor
2. TP sensor
3. Monitor coupler
4. CO adjusting resistor
5. Ignition timing adjusting resistor
6. MAP sensor
7. CMP sensor
8. Transmission range switch
9. VSS
10. HO2S
11. ECT sensor

a A/C compressor relay
b A/C condenser fan motor relay
c Main relay
d Fuel pump relay
e IAC valve
f EVAP canister purge valve
g EGR valve
h Fuel injector
i Ignitor coil assemblies
j MIL

A ECM
B AT control module
C A/C control module
D DLC
E ABS control module

NOTE:
Above figure shows left-hand steering vehicle. For right hand steering vehicle, parts with (※) are installed at the other side.

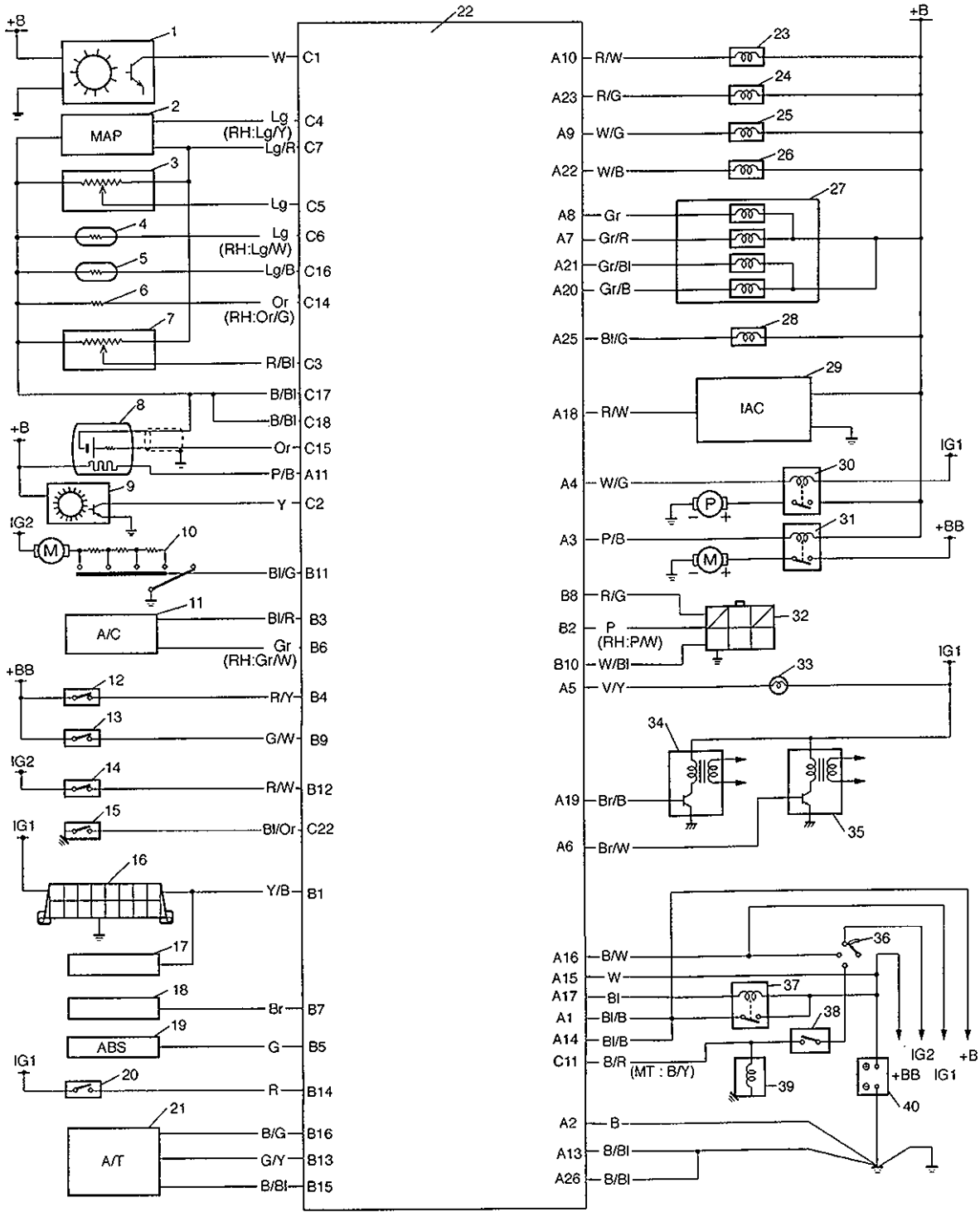

TERMINAL ARRANGEMENT OF ECM COUPLER (VIEWED FROM HARNESS SIDE)

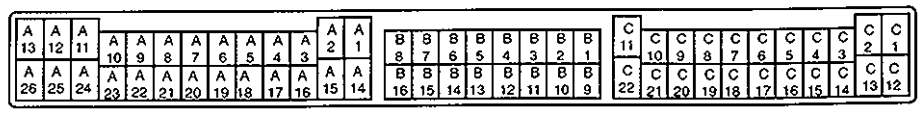

1.Camshaft position sensor
2.Manifold absolute pressure sensor
3.Throttle position sensor
4.Engine coolant temp. sensor
5.Intake air temp. sensor
6.Ignition timing adjusting resistor
7.CO adjusting resistor (w/o HO2S)
8.Heated oxygen sensor (if equipped)
9.Vehicle speed sensor
10.Heater blower switch
11.A/C control module (if equipped)
12.Lighting switch
13.Stop lamp switch
14.Rear defogger switch (if equipped)
15.Power steering pressure switch
16.Data link connector
17.Immobilizer control module (if equipped)
18.Tacho meter (if equipped)
19.ABS control module (if equipped)
20.R-range switch (A/T)
21.A/T control module (A/T)
22.Engine control module
23.Fuel injector No.1
24.Fuel injector No.2
25.Fuel injector No.3
26.Fuel injector No.4
27.EGR valve (if equipped)
28.EVAP canister purge valve (if equipped)
29.IAC valve
30.Fuel pump relay
31.A/C condenser fan motor relay (if equipped)
32.Monitor connector
33.Malfunction indicator lamp
34.Ignition coil assembly for No.2 and No.3
35.Ignition coil assembly for No.1 and No.4
36.Ignition switch
37.Main relay
38.Park/Neutral position switch (A/T)
39.Starter magnetic switch
40.Battery

A1	Bl/B	Power source
A2	B	Ground
A3	P/B	A/C condenser fan motor relay (if equipped)
A4	W/G	Fuel pump relay
A5	V/Y	Malfunction indicator lamp
A6	Br/W	Ignition coil assembly for No.1 and No.4
A7	Gr/R	EGR valve (stepper motor coil 3, if equipped)
A8	Gr	EGR valve (stepper motor coil 1, if equipped)
A9	W/G	Fuel injector No.3
A10	R/W	Fuel injector No.1
A11	P/B	Heater of HO2S (if equipped)
A12	–	–
A13	B/Bl	Ground
A14	Bl/B	Power source
A15	W	Power source for back up
A16	B/W	Ignition switch (if equipped)
A17	Bl	Main relay
A18	R/W	IAC valve (stepper motor coil 1)
A19	Br/B	Ignition coil assembly for No.2 and No.3
A20	Gr/B	EGR valve (stepper motor coil 4, if equipped)
A21	Gr/Bl	EGR valve (stepper motor coil 2, if equipped)
A22	W/B	Fuel injector No.4
A23	R/G	Fuel injector No.2
A24	–	–
A25	Bl/G	EVAP canister purge valve (if equipped)
A26	B/Bl	Ground
B1	Y/B	Data link connector
B2	P (RH:P/W)	Test switch terminal
B3	Bl/R	A/C signal (if equipped)
B4	R/Y	Lighting switch
B5	G	ABS signal (if equipped)
B6	Gr (RH:Gr/W)	A/C cut signal (if equipped)
B7	Br	Tacho meter
B8	R/G	Duty output terminal
B9	G/W	Stop lamp switch
B10	W/Bl	Diag. Switch terminal
B11	Bl/G	Heater blower switch
B12	R/W	Rear defogger switch (if equipped)
B13	G/Y	Park/Neutral position signal
B14	R	R-range signal
B15	B/Bl	Throttle opening signal
B16	B/Y	Overdrive cut signal
C1	W	Camshaft position sensor
C2	Y	Vehicle speed sensor
C3	R/Bl	CO adjusting resistor (w/o H2S)
C4	Lg (RH:Lg/Y)	Manifold absolute pressure sensor
C5	Lg	Throttle position sensor
C6	Lg (RH:Lg/W)	Engine coolant temp. sensor
C7	Lg/R	Power source for MAP sensor, TP sensor, CO adjust resistor
C8, C9, C10		–
C11	B/R (MT:B/Y)	Engine start signal
C12, C13		–
C14	Or (RH:Or/G)	Ignition timing adjusting resistor
C15	Or	Heated oxygen sensor (if equipped)
C16	Lg/B	Intake air temp. sensor
C17	B/Bl	Ground
C18	B/Bl	Ground
C19, C20, C21		–
C22	Bl/Or	Power steering pressure switch

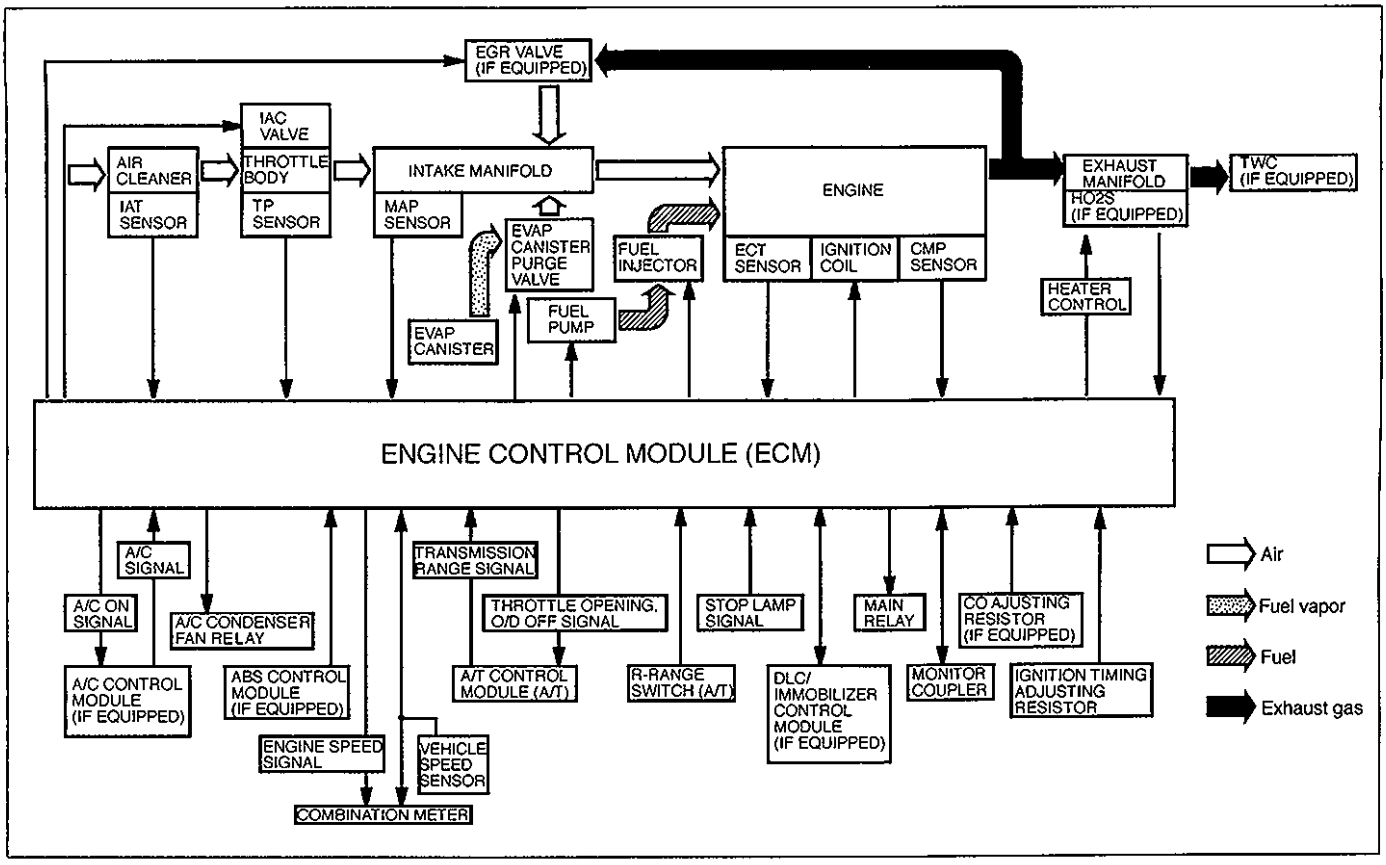

		SIGNAL FROM SENSOR, SWITCH AND CONTROL MODULE																				
		CMP SENSOR	MAP SENSOR	TP SENSOR	ECT SENSOR	IAT SENSOR	HO2S (IF EQUIPPED)	CO ADJUSTING RESISTOR (W/O HO2S)	VSS	IGNITION TIMING ADJUSTING RESISTOR	BLOWER FAN SWITCH	REAR DEFOGGER SWITCH (IF EQUIPPED)	LIGHTING SWITCH	PSP SWITCH (IF EQUIPPED)	IGNITION SWITCH	START SWITCH	STOP LAMP SWITCH	"R" RANGE SWITCH	A/T CONTROL MODULE	ABS CONTROL MODULE (IF EQUIPPED)	A/C CONTROL MODULE (IF EQUIPPED)	DIAGNOSIS SWITCH	TEST SWITCH
ELECTRIC CONTROL DEVICE	FUEL PUMP RELAY	○													○	○							
	FUEL INJECTOR	○	○	○	○	○	○	○								○			○	○			
	HO2S HEATER	○	○																				
	IAC VALVE	○	○	○	○	○			○		○	○	○	○			○		○	○	○		
	IGNITION COIL WITH IGNITER	○	○		○	○				○	○	○		○				○					○
	EGR VALVE	○	○	○	○	○																	
	EVAP CANISTER PURGE VALVE	○	○	○	○																		
	A/T CONTROL MODULE	○		○	○																		
	A/C CONTROL MODULE	○		○	○																○		
	A/C CONDENSER FAN RELAY				○																○		
	TACHOMETER	○																					
	MIL	○													○							○	
	MAIN RELAY														○								

DIAGNOSIS

The engine and emission control system in this vehicle are controlled by ECM. ECM has an On-Board Diagnostic system which detects a malfunction in this system.
When diagnosing troubles, be sure to have full understanding of the outline of "On-Board Diagnostic System" and each item in "Precaution in Diagnosing Trouble" and execute diagnosis according to "Engine Diagnostic Flow Table" in section 6.

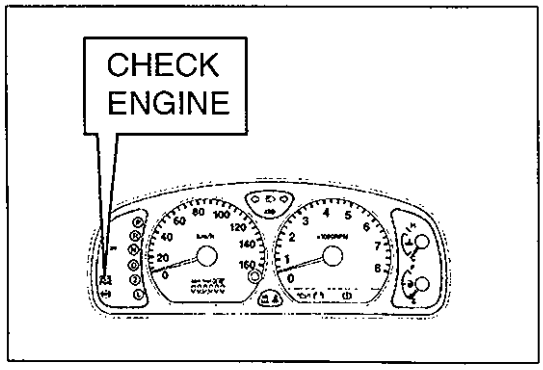

ON-BOARD DIAGNOSTIC SYSTEM

ECM performs on-board diagnosis (self-diagnosis) on the system and operates "CHECK ENGINE" lamp (malfunction indicator lamp) as follows.

- Malfunction indicator lamp ("CHECK ENGINE" light) lights when the ignition switch is turned ON position (but the engine at stop) regardless of the condition of Engine and emission control system. This is only to check the malfunction indicator lamp ("CHECK ENGINE" light) bulb and its circuit.
- If the areas monitored by ECM is free from any trouble after the engine start (while engine is running), malfunction indicator lamp ("CHECK ENGINE" light) turns OFF.
- When ECM detects a trouble which has occurred in the areas, it makes malfunction indicator lamp ("CHECK ENGINE" light) turn ON while the engine is running to warn the driver of such occurrence of trouble and at the same time it stores the exact trouble area in ECM back-up memory.

PRECAUTIONS IN DIAGNOSING TROUBLES

- Before identifying diagnostic trouble code, don't disconnect couplers from ECM, battery cable from battery, ECM ground wire harness from engine. Such disconnection will erase memorized trouble in ECM memory.
- Be sure to read "Precautions for Electrical Circuit Service" in Section 0A before inspection and observe what is written there.
- ECM replacement
  When substituting a known-good ECM, check for following conditions. Neglecting this check may cause damage to known-good ECM.
  – Resistance value of all relays, actuators is as specified respectively.
  – TP sensor and MAP sensor are in good condition and none of power circuits of these sensors is shorted to ground.

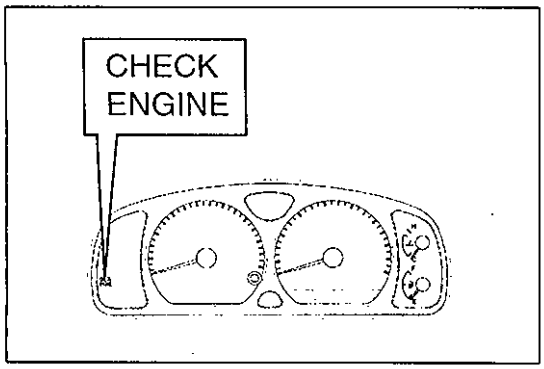

MALFUNCTION INDICATOR LAMP ("CHECK ENGINE" LAMP) CHECK

1) Turn the ignition switch ON position (but engine at stop) and check that malfunction indicator lamp ("CHECK ENGINE" lamp) lights. If lamp does not light up, go to "Diagnostic Flow Table A-1" in this section. If lamp flushes, go to "Diagnostic Flow Table A-2" in this section.
2) Start engine and check that malfunction indicator lamp ("CHECK ENGINE" lamp) turns OFF.
   If lamp remains ON, go to "Diagnostic Trouble Code Check".

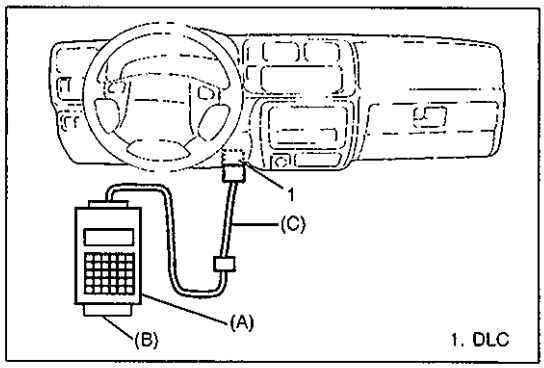

DIAGNOSTIC TROUBLE CODE (DTC) CHECK

NOTE:
Diagnostic trouble code No.37 (ABS SIGNAL) is not read by using SUZUKI scan tool.

[Using SUZUKI scan tool]

NOTE:
It is not possible to read DTCs of immobilizer control system by using SUZUKI scan tool. If immobilizer control system is suspected to be defective (engine fails to start and "CHECK ENGINE" lamp flashes at ignition switch ON), check DTCs by using "CHECK ENGINE" lamp.

1) Check malfunction indicator lamp ("CHECK ENGINE" lamp) referring to "Malfunction Indicator Lamp ("CHECK ENGINE" lamp) Check" in this section.
2) Turn the ignition switch OFF position.
3) After setting cartridge to SUZUKI scan tool, connect it to data link connector (DLC) located on underside of instrument panel at driver's seat side.

   Special Tool
   (A): 09931-76011 (SUZUKI scan tool)
   (B): Mass storage cartridge
   (C): 09931-76030 (16/14 pin DLC cable)

4) Turn the ignition switch ON position.
5) Read DTC according to instructions displayed on SUZUKI scan tool and print it or write it down. Refer to SUZUKI scan tool operator's manual for further details.
   "NO CODE" is displayed, recheck DTC by not using SUZUKI scan tool procedure.
   If communication between SUZUKI scan tool and ECM is not possible, check if SUZUKI scan tool is communicable by connecting it to ECM in another vehicle. If communication is possible in this case, SUZUKI scan tool is in good condition. Then check data link connector and serial data line (circuit) in the vehicle with which communication was not possible.
6) After completing the check, turn the ignition switch OFF position and disconnect SUZUKI scan tool from data link connector (DLC).

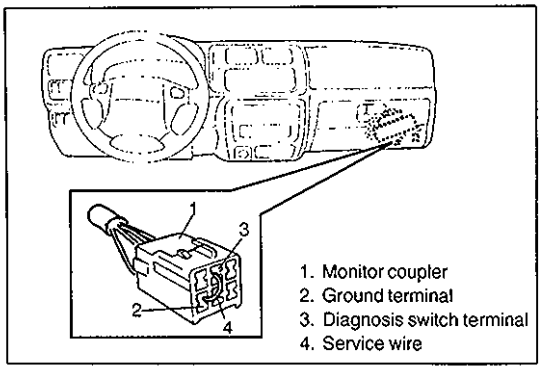

[Not using SUZUKI scan tool]

1) Check malfunction indicator lamp ("CHECK ENGINE" light) referring to "Malfunction Indicator Lamp ("CHECK ENGINE" light) Check" in this section.
2) With the ignition switch OFF position, disconnect SUZUKI scan tool if connected and using service wire, ground diagnosis switch terminal in monitor coupler.
3) With the ignition switch ON position and leaving engine OFF, read DTC from flashing pattern of malfunction indicator lamp ("CHECK ENGINE" light). Refer to "Diagnostic Trouble Code Table".
   If lamp remains ON, go to "Diagnostic Flow Table A-3".

NOTE:

- **If abnormality or malfunction lies in two or more areas, malfunction indicator lamp ("CHECK ENGINE" light) indicates applicable codes three times each.**
  And flashing of these codes is repeated as long as diagnosis terminal is grounded and ignition switch is held at ON position.
- **Take a note of diagnostic trouble code indicated first.**

4) After completing the check, turn the ignition switch OFF position and disconnect service wire from monitor coupler.

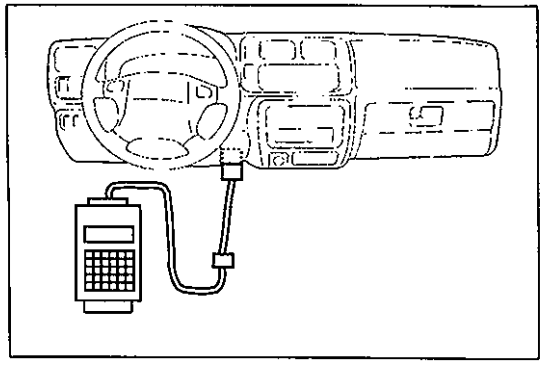

DIAGNOSTIC TROUBLE CODE (DTC) CLEARANCE

[Using SUZUKI scan tool]

1) Turn the ignition switch OFF position.
2) Connect SUZUKI scan tool to data link connector (DLC) in the same manner as when making this connection for DTC check.
3) Turn the ignition switch ON position.
4) Erase DTC according to instructions displayed on SUZUKI scan tool.
   Refer to SUZUKI scan tool operator's manual for further details.
5) After completing the clearance, turn the ignition switch OFF position and disconnect SUZUKI scan tool from data link connector (DLC).

[Not using SUZUKI scan tool]

1) Turn the ignition switch OFF position.
2) Disconnect battery negative cable for specified time below to erase diagnostic trouble code stored in ECM memory and reconnect it.

Time required to erase DTC:

Ambient temperature	Time to cut power to ECM
Over 0°C (32°F)	30 sec. or longer
Under 0°C (32°F)	Not specifiable. Select a place with higher than 0°C (32°F) temperature.

DIAGNOSTIC TROUBLE CODE TABLE (M/T AND A/T)

NOTE: DTC No.37 is read by MIL flashing pattern only.

EXAMPLE: When throttle position sensor is defective (Code No. 21)

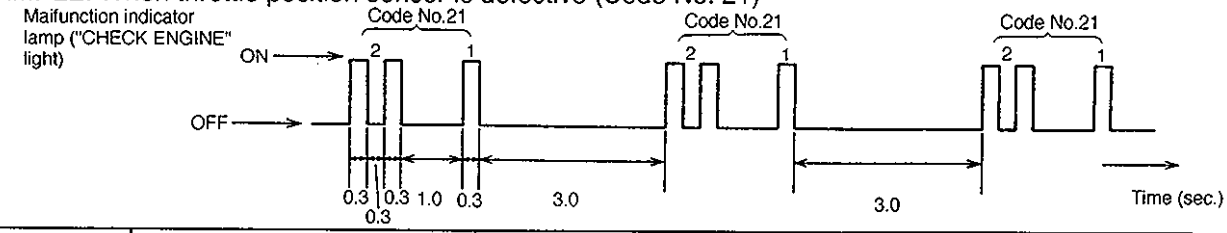

DIAGNOSTIC TROUBLE CODE NO.	MALFUNCTION INDICATOR LAMP ("CHECK ENGINE" LIGHT) FLASHING PATTERN	DIAGNOSTIC ITEM	DIAGNOSIS
13	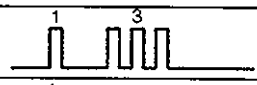	Heated oxygen sensor (if equipped)	Diagnose trouble according to "DIAGNOSTIC FLOW TABLE" corresponding to each code No.
14		Engine coolant temperature sensor	
15			
21	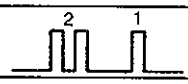	Throttle position sensor	
22	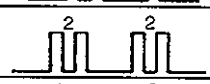		
23		Intake air temperature sensor	
25	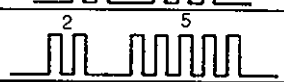		
24		Vehicle speed sensor	
31	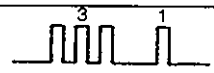	Manifold absolute pressure sensor	
32	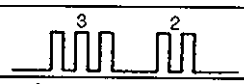		
37	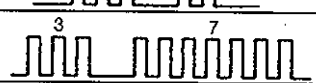	ABS signal (if equipped)	
42	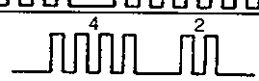	Camshaft position sensor	
12	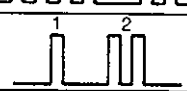	Normal	This code appears when none of the other codes (above codes) are identified.

DIAGNOSTIC TROUBLE CODE TABLE (FOR VEHICLE EQUIPPED WITH IMMOBILIZER CONTROL SYSTEM ONLY)

DIAGNOSTIC TROUBLE CODE NO.	MALFUNCTION INDICATOR LAMP ("CHECK ENGINE" LIGHT) FLASHING PATTERN	DIAGNOSTIC ITEM	DIAGNOSIS
81	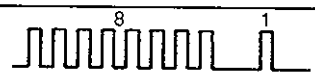	ECM/ICM code	Refer to "IMMOBILIZER CONTROL SYSTEM" section.
84	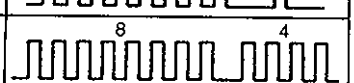		
82	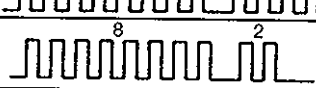	ECM	
83	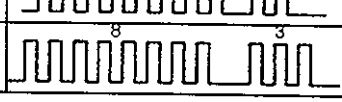	Serial data link	

TABLE A-1 MALFUNCTION INDICATOR LAMP CIRCUIT CHECK
MIL DOES NOT COME ON AT IGNITION SWITCH ON LEAVING ENGINE OFF

TABLE A-2 MALFUNCTION INDICATOR LAMP CIRCUIT CHECK
MIL FLASHES AT IGNITION SWITCH ON

TABLE A-3 MALFUNCTION INDICATOR LAMP CIRCUIT CHECK
MIL DOES NOT FLASH, JUST REMAINS ON OR JUST REMAINS OFF EVEN WITH GROUNDING DIAGNOSIS SWITCH TERMINAL

TABLE A-4 ECM POWER AND GROUND CIRCUIT CHECK
MIL DOES NOT LIGHT AT IGNITION SWITCH ON AND ENGINE DOES NOT START THOUGH IT IS CRANKED UP

WIRING DIAGRAM

TERMINAL ARRANGEMENT OF ECM COUPLER (VIEWED FROM HARNESS SIDE)

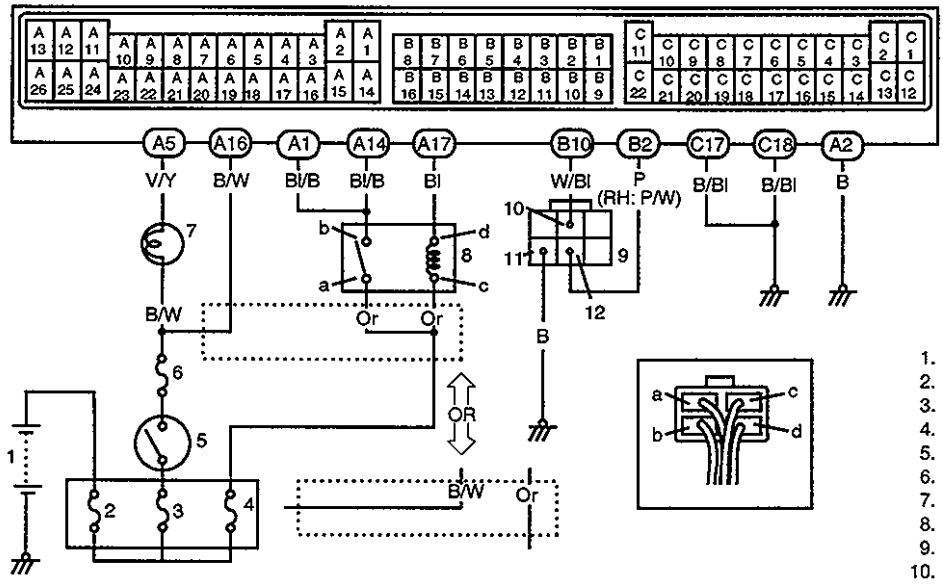

1. Battery
2. "BATT" fuse
3. "IG" fuse
4. "FI" fuse
5. Ignition switch
6. "IG COIL METER" fuse
7. MIL (CHECK ENGINE LAMP)
8. Main relay
9. Monitor coupler
10. Diagnosis switch terminal
11. Ground terminal
12. Test switch terminal

TROUBLE SHOOTING

TABLE A-1

STEP	ACTION	YES	NO
1	Test switch terminal circuit check: (1) With the ignition switch ON position, check voltage between B2 terminal of ECM coupler and ground. Is voltage 4-5V?	Go to Step 2.	"P" (RH: "P/W") wire (test switch terminal) shorted to ground circuit. If OK, substitute a known good ECM and recheck.
2	MIL bulb and circuit check: (1) Using service wire, ground A5 terminal of ECM coupler. Does MIL turn ON at ignition switch ON position?	Go to TABLE A-4.	MIL bulb burned out. Fuse(s) blown. Ignition switch malfunction. "V/Y" wire open. "B/W" wire open.

TABLE A-2

STEP	ACTION	YES	NO
1	MIL flashing pattern check: (1) With the ignition switch ON position, check MIL flashing pattern. Does MIL flashing pattern indicate DTC (diagnostic trouble code) ?	Go to Step 2.	Go to "Diagnosis" in section 8A.
2	Diagnosis switch terminal check: (1) With the ignition switch ON position, check voltage between B10 terminal of ECM coupler and ground. Is voltage 4-5V?	Substitute a known good ECM and recheck.	"W/Bl" wire (diagnosis switch terminal) shorted to ground circuit. If OK, substitute a known good ECM and recheck.

TABLE A-3

STEP	ACTION	YES	NO
1	Diagnosis switch terminal check: (1) With grounding diagnosis switch terminal and turn the ignition switch ON position, check voltage between B10 terminal of ECM coupler and ground. Is voltage 0-1V?	Go to Step 2.	"W/Bl" wire (diagnosis switch terminal), "B" wire of monitor coupler open. If OK, substitute a known good ECM and recheck.
2	Test switch terminal circuit check: (1) With the ignition switch ON position, check voltage between B2 terminal of ECM coupler and ground. Is voltage 4-5V?	Substitute a known good ECM and recheck.	"P" (RH: "P/W") wire (test switch terminal) shorted to ground circuit. If OK, substitute a known good ECM and recheck.

TABLE A-4

STEP	ACTION	YES	NO
1	Was "TABLE A-1" performed?	Go to Step 2.	Perform "TABLE A-1".
2	Ignition switch signal check: (1) With the ignition switch ON position, check voltage between A16 terminal of ECM coupler and ground. Is voltage 10-14V?	Go to step 3.	"B/W" wire open.
3	Main relay power circuit check: (1) With the ignition switch OFF position, Check voltage between "a" terminal of main relay coupler and ground, "c" terminal of main relay coupler and ground. Is each voltage 10-14V?	Go to Step 4.	Fuse blown. "Or", "B/W" wire open.
4	Main relay function check: (1) Check main relay function referring to "main relay inspection" in this section. Is main relay in good condition?	Go to Step 5.	Replace main relay and recheck.
5	ECM ground circuit check: (1) Disconnect ECM couplers. (2) Check continuity between C17 terminal of ECM coupler and ground C18 terminal of ECM coupler and ground A2 terminal of ECM coupler and ground Is each check result OK?	Go to Step 6.	"B/Bl","B" circuit open.
6	Main relay circuit check: (1) Check voltage between A17 terminal of ECM coupler and ground. Ignition switch OFF position : 10-14V Ignition switch ON position : 0-2V Is each check result as specified?	Go to Step 7.	"Bl" wire open. If OK, substitute a known-good ECM and recheck.
7	ECM power circuit check: (1) With the ignition switch ON position, check voltage between A1 terminal of ECM coupler and ground A14 terminal of ECM coupler and ground. Is each voltage 10-14V?	ECM power and ground circuit in good condition.	"Bl/B" wire open.

DTC NO.13 HEATED OXYGEN SENSOR CIRCUIT

(SIGNAL VOLTAGE LOW)

WIRING DIAGRAM

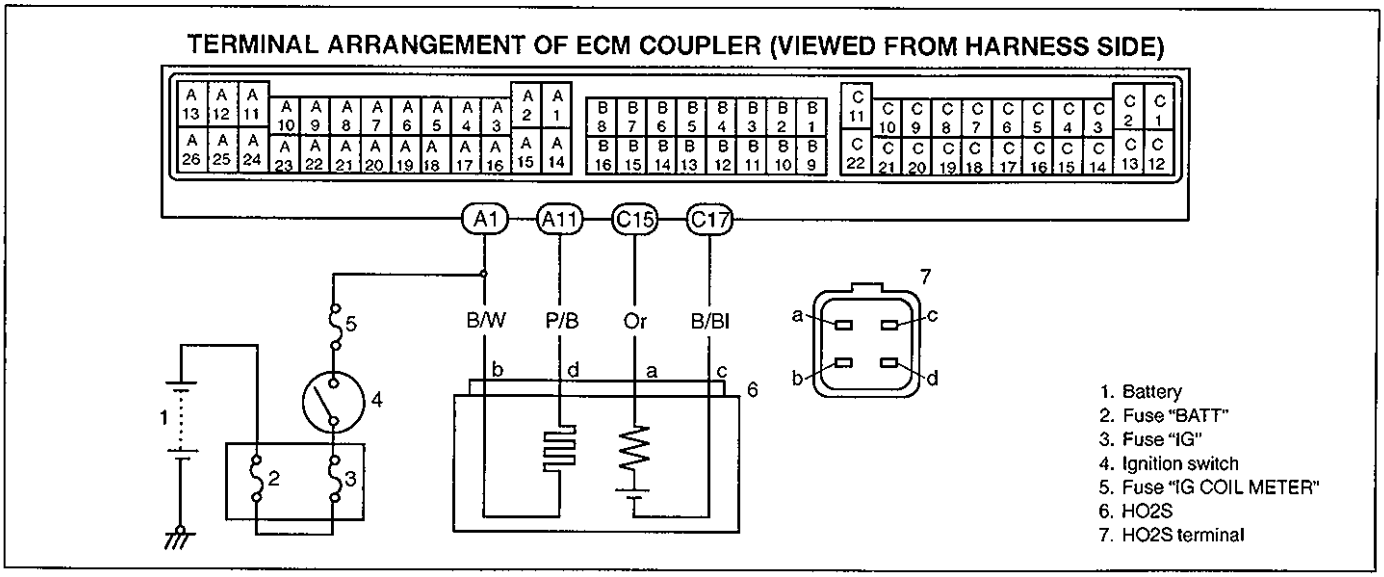

NOTE:

- **Before diagnosing trouble according to flow table given below, check to make sure that following system and parts other than Electronic Fuel Injection system are in good condition.**
  - **Air cleaner (clogged)**
  - **Vacuum leaks (air inhaling)**
  - **Spark plugs (contamination, gap)**
  - **High-tension cords (crack, deterioration)**
  - **Ignition timing**
  - **Engine compression**
  - **Any other system and parts which might affect A/F mixture or combustion.**
- **If code No.13 and another code No. are Indicated together, the latter has priority. Therefore, check and correct what is represented by that code No. first and then proceed to the following check.**
- **Be sure to use a voltmeter with high impedance (MΩ/V minimum) or digital type voltmeter for accurate measurement.**

TROUBLE SHOOTING

STEP	ACTION	YES	NO
1	Was "ENGINE DIAG. FLOW TABLE" in section6 performed?	Go to Step 2.	Go to"ENGINE DIAG. FLOW TABLE".
2	HO2S output signal check: (1) Connect voltmeter between C15 and C17 of ECM coupler. (2) Warm up engine to normal operating temperature. (3) Maintain engine speed at 2000 r/min. after 60 seconds, check voltmeter. Does the voltage deflect between above and below 0.55 V repeatedly?	Intermittent trouble. If Ok, substitute a known good ECM and recheck.	Go to Step 3.
3	Wiring harness check: (1) Check "Or" and "B/Bl" wire for open and short. Are they in good condition?	Replace HO2S and recheck.	Repair or replace.

NOTE:

Upon completion of inspection and repair work, perform DTC Confirmation Procedure, referring to p.6E-26 to confirm that the trouble has been corrected.

DTC NO.14 ENGINE COOLANT TEMPERATURE SENSOR CIRCUIT
(SIGNAL VOLTAGE HIGH)
DTC NO.15 ENGINE COOLANT TEMPERATURE SENSOR CIRCUIT
(SIGNAL VOLTAGE LOW)

WIRING DIAGRAM

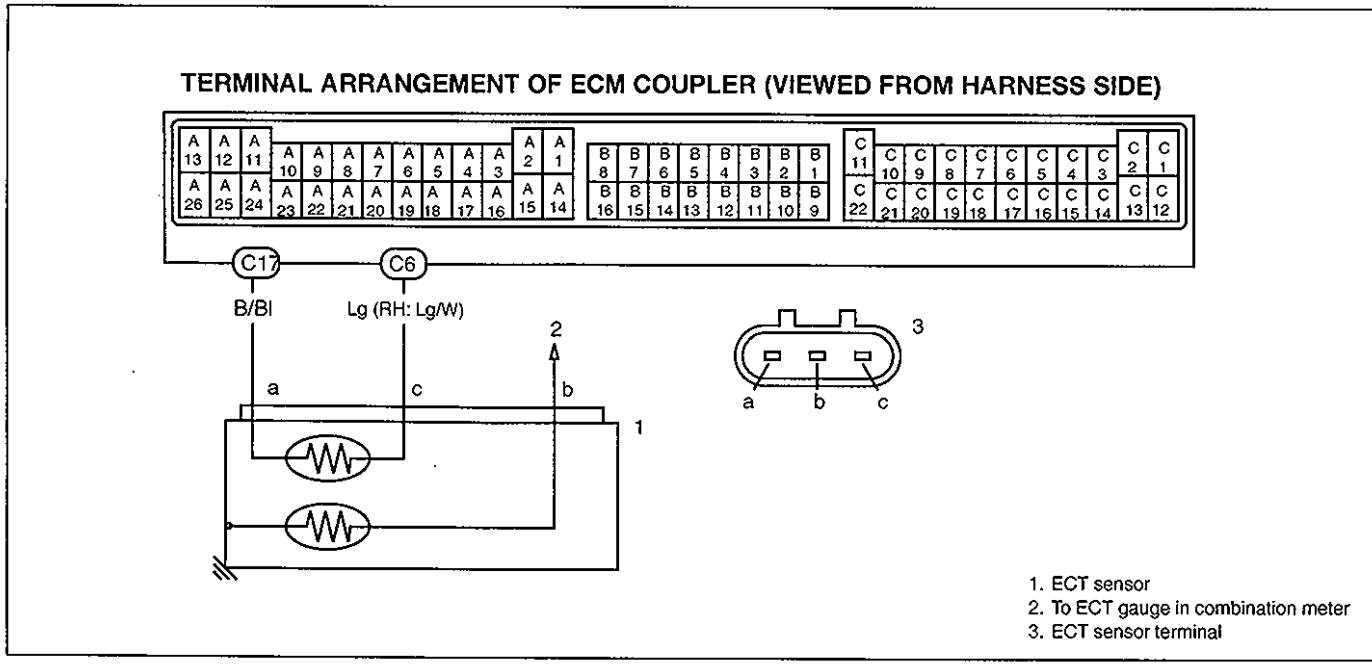

TROUBLE SHOOTING

STEP	ACTION	YES	NO
1	Was "ENGINE DIAG. FLOW TABLE" in section6 performed?	Go to Step 2.	Go to"ENGINE DIAG. FLOW TABLE".
2	(1) With the ignition switch OFF position, disconnect ECT sensor coupler. (2) With the ignition switch ON position, check voltage between "Lg" (RH: "Lg/W") wire terminal of ECT sensor coupler and ground. Is voltage 4-5V?	**DTC NO.14:** Go to Step 3.	**DTC NO.14:** "Lg" (RH: "Lg/W") wire open or shorted to power circuit. If OK, substitute a known good ECM and recheck.
		DTC NO.15: Go to Step 4.	**DTC NO.15:** "Lg" (RH: "Lg/W") wire shorted to ground circuit. If OK, substitute a known good ECM and recheck.
3	(1) Using service wire, connect "Lg" (RH: "Lg/W") wire terminal and "B/Bl" wire terminal. (2) With the ignition switch ON position, check voltage between "Lg" (RH: "Lg/W") wire terminal of ECT sensor coupler and ground. Is voltage below 0.15V?	Go to Step 4.	"B/Bl" wire open. If OK, substitute a known good ECM and recheck.
4	(1) Check ECT sensor referring to "ECT sensor inspection" in this section. Is check result as specified?	Poor ECT sensor terminal connection. If OK, intermittent trouble or faulty ECM.	Faulty ECT sensor.

NOTE:
Upon completion of inspection and repair work, perform DTC Confirmation Procedure, referring to p.6E-26 to confirm that the trouble has been corrected.

DTC NO.21 THROTTLE POSITION SENSOR CIRCUIT
(SIGNAL VOLTAGE HIGH)
DTC NO.22 THROTTLE POSITION SENSOR CIRCUIT
(SIGNAL VOLTAGE LOW)

WIRING DIAGRAM

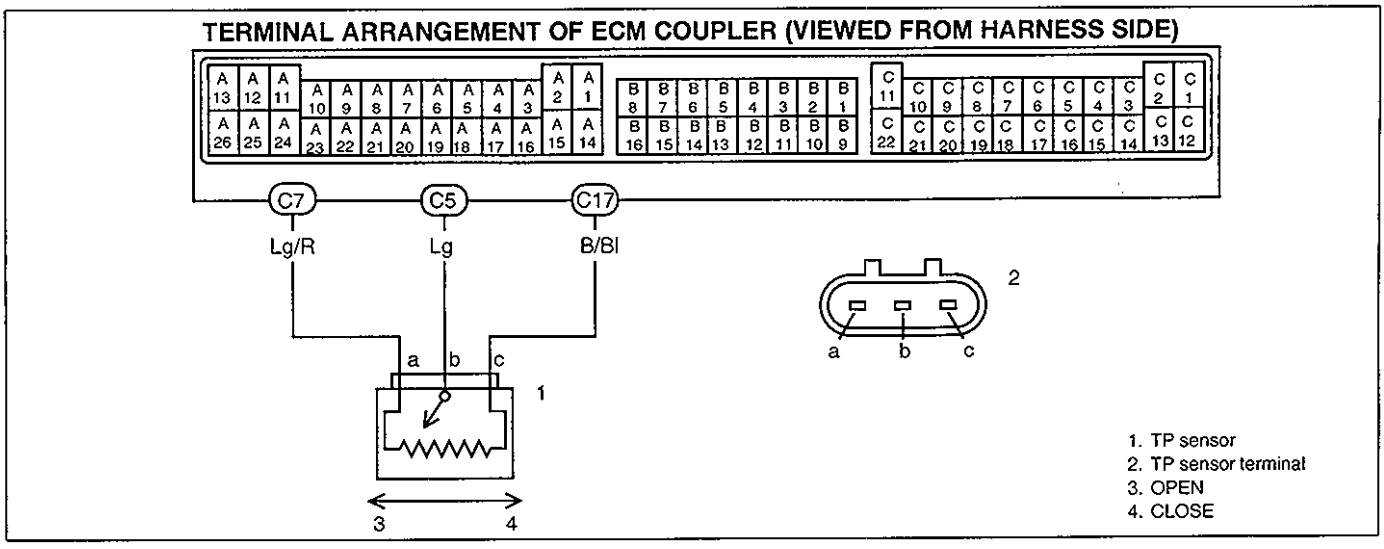

TROUBLE SHOOTING

STEP	ACTION	YES	NO
1	Was "ENGINE DIAG. FLOW TABLE" in section6 performed?	Go to Step 2.	Go to"ENGINE DIAG. FLOW TABLE".
2	(1) With the ignition switch OFF position, disconnect TP sensor coupler. (2) With the ignition switch ON position, check voltage between "Lg/R" wire terminal of TP sensor coupler and ground. Is voltage 4-5V?	Go to Step 3.	**DTC NO.21:** "Lg/R" wire shorted to power circuit. If OK, substitute a known good ECM and recheck. **DTC NO.22:** "Lg/R" wire shorted to ground circuit. If OK, substitute a known good ECM and recheck.
3	(1) With the ignition switch ON position, check voltage between "Lg" wire terminal of TP sensor coupler and ground. Is voltage 4-5V?	Go to Step 4.	**DTC NO.21:** "Lg" wire shorted to power circuit. If OK, substitute a known good ECM and recheck. **DTC NO.22:** "Lg" wire shorted to ground circuit. If OK, substitute a known good ECM and recheck.
4	(1) Check TP sensor referring to "TP sensor inspection" in this section. Is check result within specifications?	**DTC NO.21:** "B/Bl" wire open. If OK, substitute a known good ECM and recheck. **DTC NO.22:** If OK, substitute a known good ECM and recheck.	Replace TP sensor.

NOTE:

Upon completion of inspection and repair work, perform DTC Confirmation Procedure, referring to p.6E-26 to confirm that the trouble has been corrected.

DTC NO.23 INTAKE AIR TEMPERATURE SENSOR CIRCUIT
(SIGNAL VOLTAGE HIGH)
DTC NO.25 INTAKE AIR TEMPERATURE SENSOR CIRCUIT
(SIGNAL VOLTAGE LOW)

WIRING DIAGRAM

TERMINAL ARRANGEMENT OF ECM COUPLER (VIEWED FROM HARNESS SIDE)

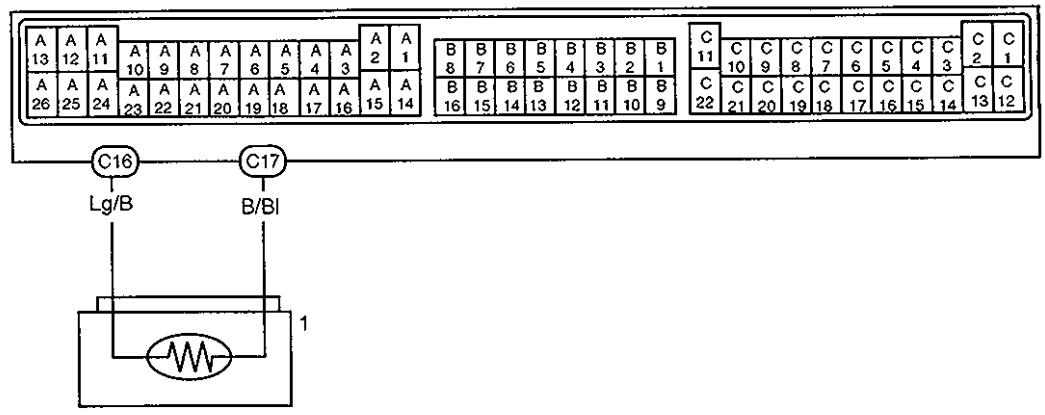

1. IAT sensor

TROUBLE SHOOTING

STEP	ACTION	YES	NO
1	Was "ENGINE DIAG. FLOW TABLE" in section6 performed?	Go to Step 2.	Go to"ENGINE DIAG. FLOW TABLE".
2	(1) With the ignition switch OFF position, disconnect ECT sensor coupler. (2) With the ignition switch ON position, check voltage between "Lg/B" wire terminal of IAT sensor coupler and ground. Is voltage 4-5V?	**DTC NO.23:** Go to Step 3.	**DTC NO.23:** "Lg/B" wire open or shorted to power circuit. If OK, substitute a known good ECM and recheck.
		DTC NO.25: Go to Step 4.	**DTC NO.25:** "Lg/B" wire shorted to ground circuit. If OK, substitute a known good ECM and recheck.
3	(1) Using service wire, connect "Lg/B" wire terminal and "B/Bl" wire terminal. (2) Check voltage between "Lg/B" wire terminal of IAT sensor coupler and ground. Is voltage below 0.15V?	Go to Step 4.	"B/Bl" wire open. If OK, substitute a known good ECM and recheck.
4	(1) Check IAT sensor referring to "IAT sensor inspection" in this section. Is check result as specified?	Poor IAT sensor terminal connection. If OK, intermittent trouble or faulty ECM.	Faulty IAT sensor.

NOTE:
Upon completion of inspection and repair work, perform DTC Confirmation Procedure, referring to p.6E-26 to confirm that the trouble has been corrected.

DTC NO.24 VEHICLE SPEED SENSOR CIRCUIT

(SIGNAL NOT INPUTTED ALTHOUGH FUEL IS KEPT CUT FOR LONGER THAN 4 SECONDS)

WIRING DIAGRAM

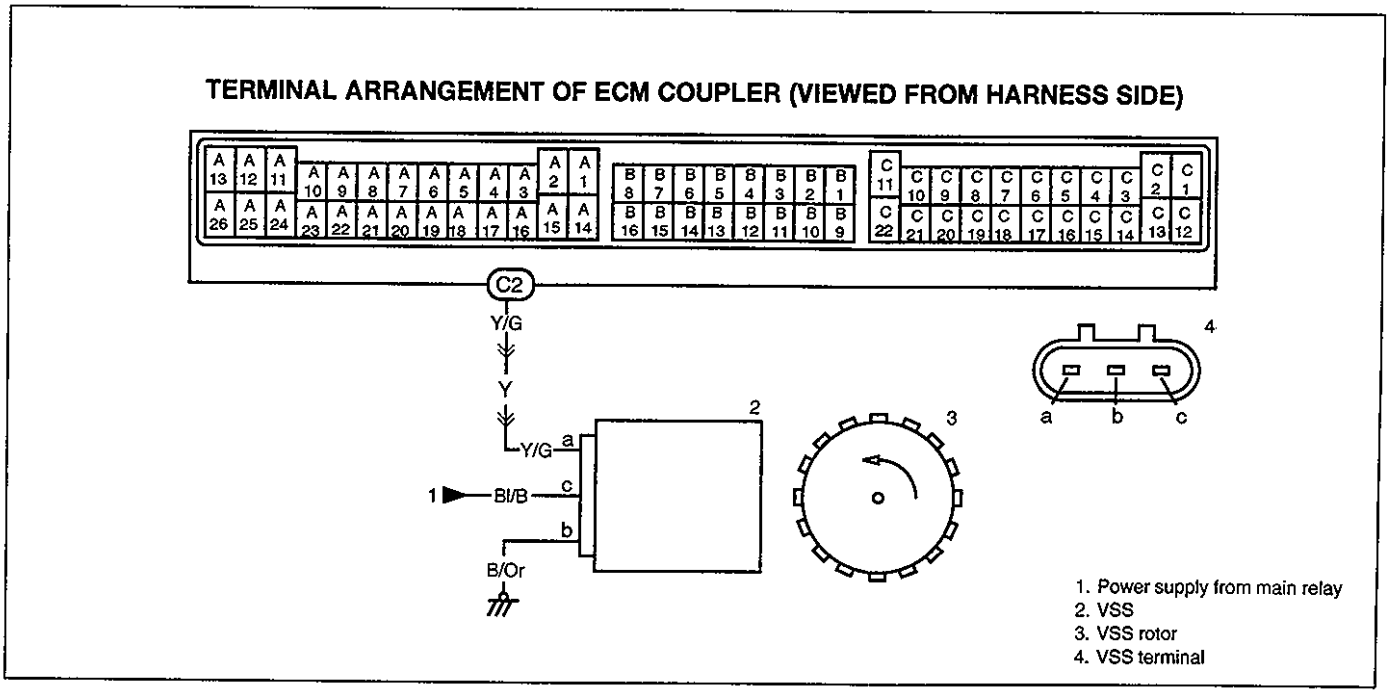

TROUBLE SHOOTING

STEP	ACTION	YES	NO
1	Was "ENGINE DIAG. FLOW TABLE" in section6 performed?	Go to Step 2.	Go to"ENGINE DIAG. FLOW TABLE".
2	Does speedometer indicate vehicle speed?	Faulty "Y" wire. If OK, intermittent trouble or faulty ECM.	Go to Step 3.
3	(1) With the ignition switch OFF position, disconnect VSS coupler. (2) With the ignition switch ON position, check voltage between "Bl/B" wire terminal and "B/Or" wire terminal. Is voltage 10-14V?	Go to Step 4.	Faulty "Bl/B", "B/Or" wire.
4	(1) Under the same condition in Step 3, check voltage between "Y/G" wire terminal and ground. Is voltage 4V or more?	Go to Step 5.	Go to Step 6.
5	(1) Remove VSS referring to section 7D. (2) Check VSS rotor referring to section 7D. Is it in good condition?	Substitute a known good VSS and recheck.	Replace VSS rotor.
6	(1) Remove combination meter referring to section 8 and disconnect combination meter couplers. (2) With the ignition switch ON position, check voltage between "Y/G" wire terminal and ground. Is voltage 4-5V?	Speedometer malfunction.	Faulty "Y", "Y/G" wire. If OK, substitute a known good ECM and recheck.

NOTE:

Upon completion of inspection and repair work, perform DTC Confirmation Procedure, referring to p.6E-26 to confirm that the trouble has been corrected.

DTC NO.31 MANIFOLD ABSOLUTE PRESSURE SENSOR CIRCUIT
(SIGNAL VOLTAGE LOW, PERFORMANCE PROBLEM)
DTC NO.32 MANIFOLD ABSOLUTE PRESSURE SENSOR CIRCUIT
(SIGNAL VOLTAGE HIGH)

WIRING DIAGRAM

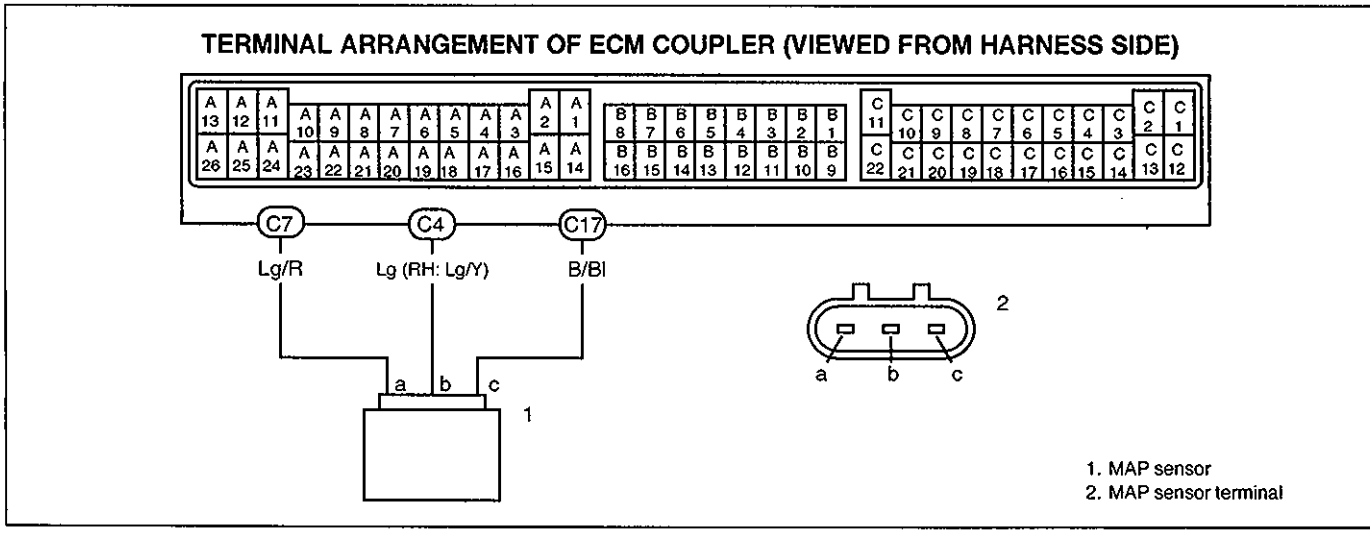

TROUBLE SHOOTING

STEP	ACTION	YES	NO
1	Was "ENGINE DIAG. FLOW TABLE" in section6 performed?	Go to Step 2.	Go to"ENGINE DIAG. FLOW TABLE".
2	(1) With the ignition switch OFF position, disconnect MAP sensor coupler. (2) With the ignition switch ON position, check voltage between "Lg/R" wire terminal and ground. Is voltage 4-5V?	Go to Step 4.	**DTC NO.31:** "Lg/R" wire open or shorted to ground circuit. If OK, substitute a known good ECM and recheck. **DTC NO.32:** "Lg/R" wire shorted to power circuit. If OK, substitute a known good ECM and recheck.
3	(1) Check MAP sensor referring to "MAP sensor inspection" in this section. Is it in good condition?	Go to Step 4.	MAP sensor malfunction.
4	(1) Check vacuum passage filter and hose. Are they in good condition?	Go to Step 5.	Replace.
5	**DTC NO.31:** (1) Check "Lg" (RH: "Lg/Y") wire for shorted to ground circuit. Is "Lg" (RH: "Lg/Y") wire in good condition?	**DTC NO.31:** Intermittent trouble. If OK, substitute a known good ECM and recheck.	Repair or replace.
	DTC NO.32: (1) Check "Lg" (RH: "Lg/Y") wire for open or shorted to power circuit. Is "Lg" (RH: "Lg/Y") wire in good condition?	**DTC No.32:** "B/Bl" wire open or intermittent trouble. If OK, substitute a known good ECM and recheck.	

NOTE:
Upon completion of inspection and repair work, perform DTC Confirmation Procedure, referring to p.6E-26 to confirm that the trouble has been corrected.

DTC NO.37 ABS SIGNAL CIRCUIT

(ABS SIGNAL INPUTTED AT ENGINE STARTING)

WIRING DIAGRAM

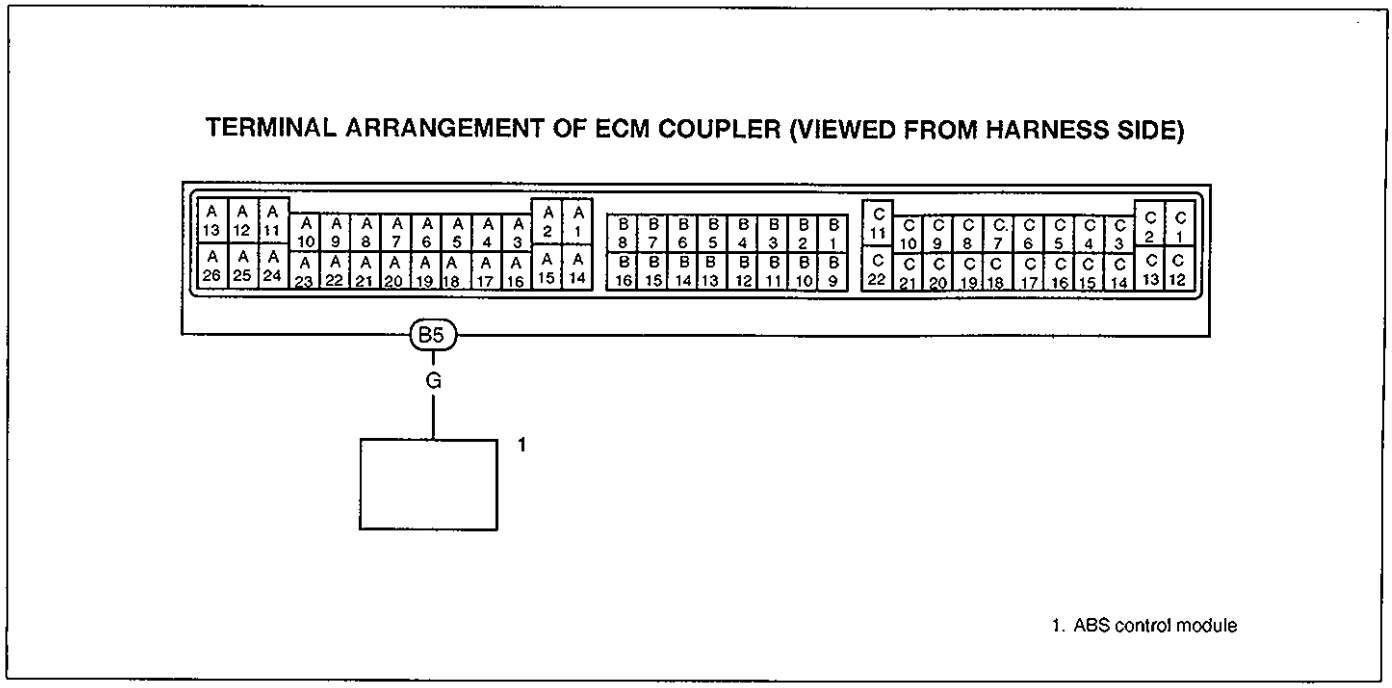

TROUBLE SHOOTING

STEP	ACTION	YES	NO
1	Was "ENGINE DIAG. FLOW TABLE" performed?	Go to Step 2.	Go to"ENGINE DIAG. FLOW TABLE".
2	(1) With the ignition switch ON position, check voltage between B5 terminal of ECM coupler and ground. Is voltage 10-14V?	Intermittent trouble. If OK, substitute a known-good ECM and recheck.	Go to Step 3.
3	(1) Check "G" wire for shorted to ground circuit. Is "G" wire in good condition?	Go to Step 4.	Repair or replace.
4	(1) Disconnect coupler of ABS control module. (2) Clear DTC. (3) Start engine and check DTC. Is DTC No.37 detected?	Substitute a known good ECM and recheck.	Substitute a known good ABS control module and recheck.

NOTE:

Upon completion of inspection and repair work, perform DTC Confirmation Procedure, referring to p.6E-26 to confirm that the trouble has been corrected.

DTC NO.42 CAMSHAFT POSITION SENSOR CIRCUIT

(SIGNAL NOT INPUTTED ALTHOUGH START SIGNAL INPUTTED FOR LONGER THAN 2 SECONDS)

WIRING DIAGRAM

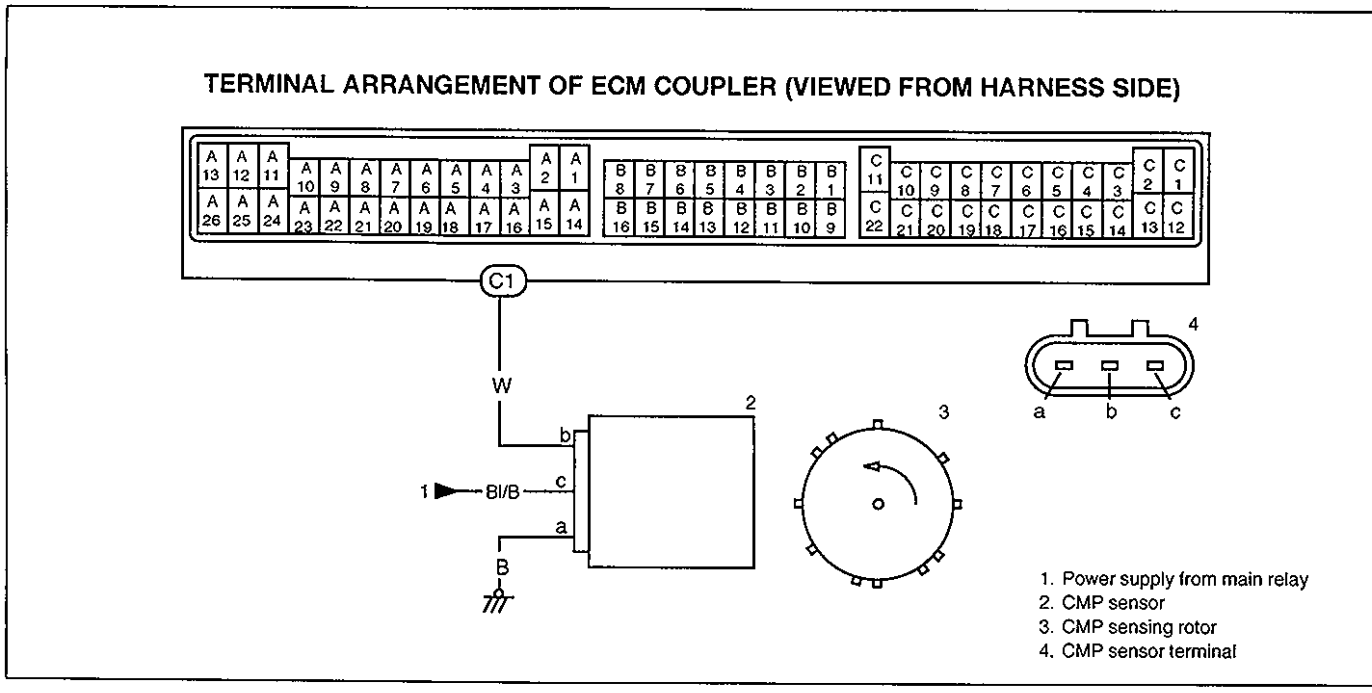

TROUBLE SHOOTING

STEP	ACTION	YES	NO
1	Was "ENGINE DIAG. FLOW TABLE" in section6 performed?	Go to Step 2.	Go to"ENGINE DIAG. FLOW TABLE".
2	Is engine cranked?	Go to Step 3.	Go to Section 6G.
3	Does engine start?	Intermittent trouble.	Go to Step 4.
4	(1) With the ignition switch OFF position, disconnect CMP sensor coupler. (2) With the ignition switch ON position, check voltage between "B/W" wire terminal and "B" wire terminal. Is voltage10-14V?	Go to Step 5.	Faulty "B/W", "B" wire.
5	(1) Under the same condition in Step 3, check voltage between "W" wire terminal and ground. Is voltage4-5V?	Go to Step 6.	Faulty "W", wire. If OK, substitute a known good ECM and recheck.
6	(1) Check CMP sensor referring to "CMP sensor inspection" in this section. (2) Check CMP sensing rotor referring to "CMP sensing rotor inspection" in this section. Are they in good condition?	Intermittent trouble. If OK, substitute a known good ECM and recheck.	Repair or replace.

NOTE:

Upon completion of inspection and repair work, perform DTC Confirmation Procedure, referring to p.6E-26 to confirm that the trouble has been corrected.

DIAGNOSTIC TROUBLE CODE (DTC) CONFIRMATION PROCEDURE

WARNING:
- **When performing a road test, select a place where there is not traffic or possibility of a traffic accident and be very careful during testing to avoid occurrence of an accident.**
- **Road test should be carried out with 2 persons, a driver and a tester, on a level road.**

1) Clear DTC stored in ECM memory referring to "DTC Clearance" in this section.
2) Perform DTC confirmation test under the following conditions.
3) Check DTC referring "DTC Check" in this section.

Test Condition for Code No.13
Perform HO2S output signal check referring to Step 2 of Code No.13 Diag. Flow Table.

Test Condition for Code No.14, 15, 21, 22, 23, 25, 32
Turn the ignition switch ON position for 5 seconds or more.

Test Condition for Code No.31, 37
Start engine and increase engine speed about 2,000 r/min for 2 seconds and stop engine.

Test Condition for Code No.42
Crank engine for 3 sec.

Driving Test Condition for Code No.24

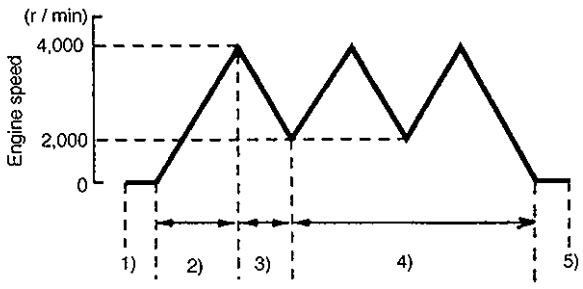

1) Start engine and warm up engine to normal operating temperature.
2) Increase engine speed to 4,000 r/min. in 3rd gear in case of M/T model and in "2" range in case of A/T model.
3) Release accelerator pedal and with engine brake applied, keep vehicle coasting for 7 to 10 seconds till engine speed reaches 2,000 r/min.
4) Repeat above steps 2) and 3) 3 times or more.
5) Stop vehicle.

TABLE B-1 FUEL PUMP CIRCUIT CHECK

WIRING DIAGRAM

TERMINAL ARRANGEMENT OF ECM COUPLER (VIEWED FROM HARNESS SIDE)

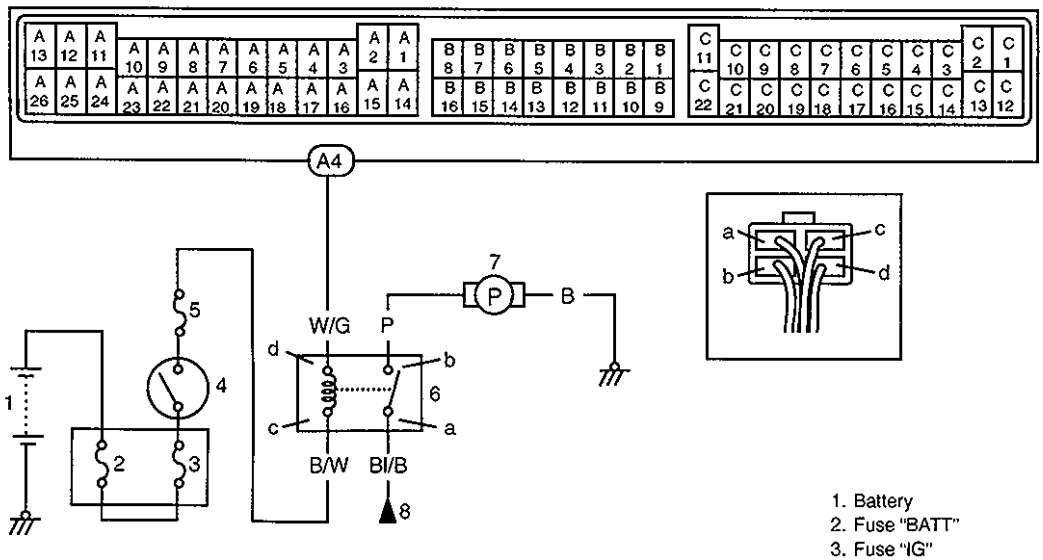

1. Battery
2. Fuse "BATT"
3. Fuse "IG"
4. Ignition switch
5. Fuse "IG COIL METER"
6. Fuel pump relay
7. Fuel pump
8. Power supply from main relay

CIRCUIT DESCRIPTION

Fuel pump relay is turned ON
- for 2 sec. after the ignition switch is turned ON position.
- while start engine signal is inputted.
- while engine is running.

TROUBLE SHOOTING

STEP	ACTION	YES	NO
1	Was "ENGINE DIAGNOSTIC FLOW TABLE" in section 6 performed?	Go to Step 2.	Perform "ENGINE DIAGNOSTIC FLOW TABLE".
2	Fuel pump operation check: (1) Remove fuel filler cap. (2) Turn the ignition switch ON position. Is fuel pump operation sound heard for 2 sec. after the ignition switch turned ON position?	Fuel pump circuit is in good condition.	Go to Step 3.
3	Fuel pump circuit check: (1) With ignition switch OFF, remove fuel pump relay. (2) Using service wire, connect "BI/B" and "P" wire terminal of fuel pump relay coupler. Is fuel pump operation sound heard with the ignition switch turned ON position?	Go to Step 4.	"BI/B", "P" wire open. "B" wire open. Fuel pump malfunction.
4	Fuel pump relay check: (1) Check fuel pump relay referring to "Fuel pump relay inspection" in this section. Is it in good condition?	"B/W", "W/G" wire open. If OK, substitute a known-good ECM and recheck.	Faulty fuel pump relay.

TABLE B-2 FUEL INJECTOR CIRCUIT CHECK

WIRING DIAGRAM

TERMINAL ARRANGEMENT OF ECM COUPLER (VIEWED FROM HARNESS SIDE)

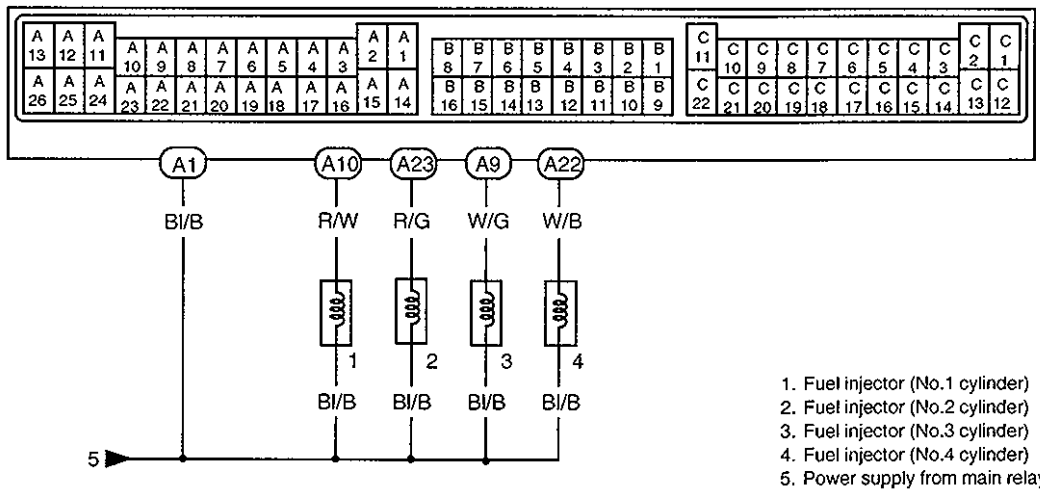

1. Fuel injector (No.1 cylinder)
2. Fuel injector (No.2 cylinder)
3. Fuel injector (No.3 cylinder)
4. Fuel injector (No.4 cylinder)
5. Power supply from main relay

TROUBLE SHOOTING

STEP	ACTION	YES	NO
1	Was "ENGINE DIAGNOSTIC FLOW TABLE" in section 6 performed?	Go to Step 2.	Perform "ENGINE DIAGNOSTIC FLOW TABLE".
2	Fuel injector operation sound check: (1) Using sound scope, check each injector for operating sound at engine cranking. Do all 4 injectors make operating sound?	Go to Step 3.	Go to Step 4.
3	Fuel injection circuit check: (1) With the ignition switch OFF position, remove ECM couplers. (2) Check resistance between following terminals. A1 and A10 A1 and A23 A1 and A9 A1 and A22 10-15 Ω at 20°C Is each check result as specified?	Fuel injector circuit is in good condition.	"R/W", "R/G", "W/G", "W/B" shorted each other. Faulty fuel injector.
4	Does none of 4 injectors make operating sound at Step 2?	Go to Step 5.	Check wire harness of injector not making operating sound and injector itself referring to "Fuel injector inspection" in this section.
5	Fuel injector circuit check: (1) Check "BI/B", "R/W", "R/G", "W/G" and "W/B" wire for open and short. Is it normal?	Check all 4 injector for resistance. If OK, substitute a known good ECM and recheck.	Faulty fuel injector circuit.

TABLE B-3 FUEL PRESSURE CHECK

SYSTEM DIAGRAM

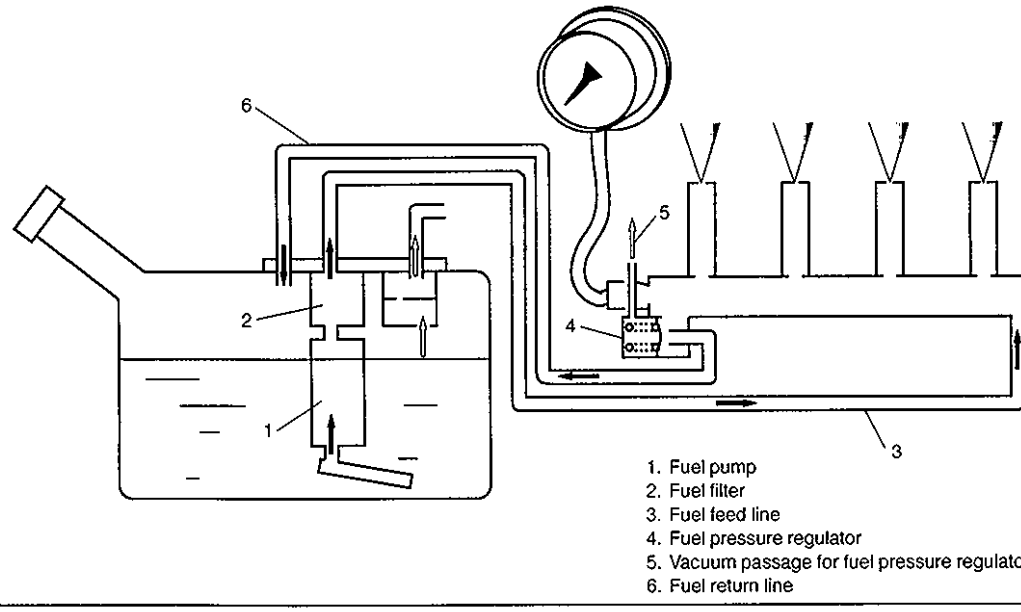

SYSTEM DESCRIPTION

Fuel pressure regulator keeps the fuel pressure applied to injector 290kPa higher than that in intake manifold at all times.

INSPECTION

NOTE:
Before using following table, check to make sure that battery voltage is higher than 11V. If battery voltage is low, pressure becomes lower than specification even if fuel pump and line are in good condition.

STEP	ACTION	YES	NO
1	Was "ENGINE DIAGNOSTIC FLOW TABLE" in section 6 performed?	Go to Step 2.	Perform "ENGINE DIAGNOSTIC FLOW TABLE".
2	Fuel pressure check (engine stops): (1) Install fuel pressure gauge referring to "Fuel delivery system" in this section. (2) Turn the ignition switch ON position and after 3 seconds turn it OFF position. Repeat this 3 or 4 times and then check fuel pressure. Is fuel pressure 270 – 310 kPa (2.7 – 3.1 kg/cm^2, 38.4 – 44.0 psi)?	Go to Step 3.	Go to Step 7.
3	Is 200 kPa (2.0 kg/cm^2, 28.4 psi) or higher fuel pressure retained for 1 minute after fuel pump is stopped at Step 2?	Go to Step 4.	Go to Step 6.
4	Fuel pressure check (idling): (1) Start engine and warm it up to normal operating temperature. (2) Keep it running at specified idle speed. Is fuel pressure 210 – 260 kPa (2.1 – 2.6 kg/cm^2, 29.8 – 37.0 psi)?	Go to Step 5.	Faulty vacuum passage for fuel pressure regulator or fuel pressure regulator.
5	Relief valve in fuel pump check: (1) With fuel pump operated and fuel return hose blocked by pinching. Is fuel pressure 441 – 637 kPa (4.5 – 6.5 kg/cm^2, 62.7 – 90.6 psi)?	Normal fuel pressure.	Faulty fuel pump.
6	Is there fuel leakage from fuel feed line hose, pipe or joint?	Repair or replace.	Fuel leakage from injector, fuel pressure regulator or fuel pump.

7	Was fuel pressure higher than specification in Step 2?	Go to Step 8.	Go to Step 9.
8	Fuel return line check : (1) Disconnect fuel return hose from fuel pipe and connect new hose to it. (2) Put the other end of new return hose into approved gasoline container. (3) Operate fuel pump. Is fuel pressure 270 – 310 kPa (2.7 – 3.1 kg/cm^2, 38.4 – 44.0 psi)?	Restricted fuel return hose or pipe.	Faulty fuel pressure regulator.
9	Fuel pressure regulator check: (1) With fuel pump operated and fuel return hose blocked by pinching. Is fuel pressure applied then?	Faulty fuel pressure regulator.	Shortage of fuel. Clogged fuel filter. Restricted fuel feed hose or pipe. Faulty fuel pump or fuel leakage from hose connection in fuel tank. Faulty fuel pump circuit.

TABLE B-4 IDLE AIR CONTROL SYSTEM CIRCUIT CHECK

SYSTEM AND CIRCUIT DIAGRAM

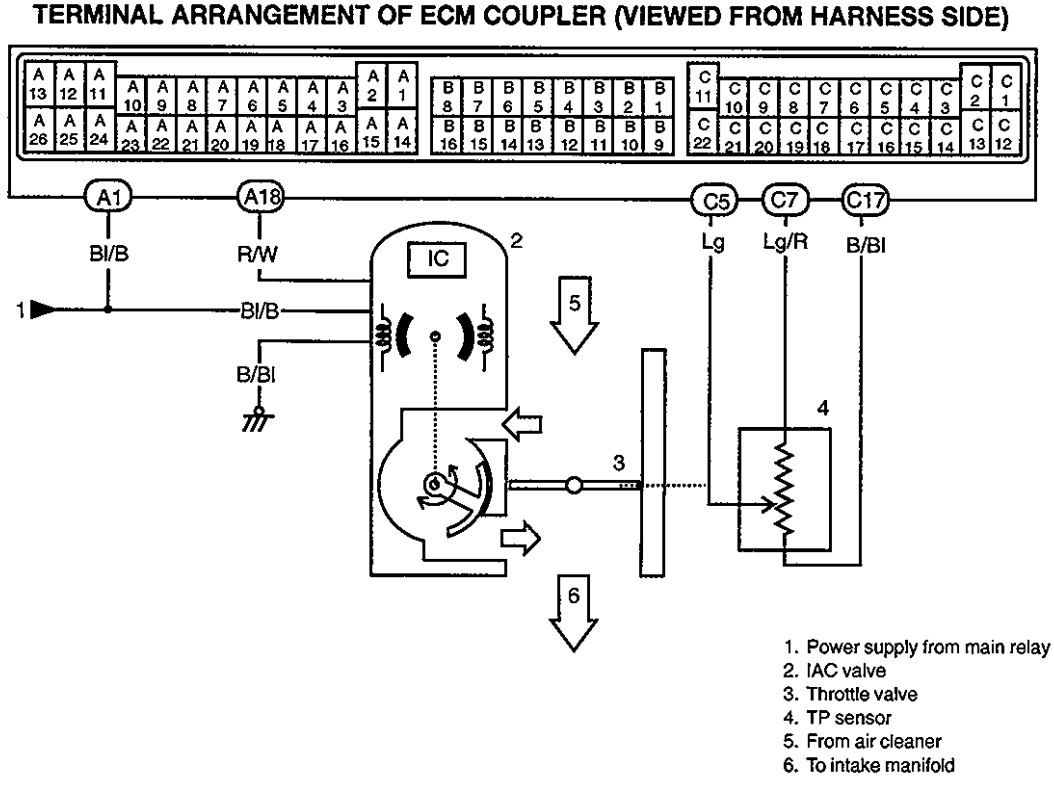

CIRCUIT DESCRIPTION

ECM transmits duty signal to IC in IAC valve. Then, the IC controls current of IAC valve coils.

INSPECTION

STEP	ACTION	YES	NO
1	Was "ENGINE DIAGNOSTIC FLOW TABLE" in section 6 performed?	Go to Step 2.	Perform "ENGINE DIAGNOSTIC FLOW TABLE".
2	IAC valve function check: (1) Check IAC valve referring to "IAC valve inspection" in this section. Is check result in good condition?	Go to Step 3.	Go to Step 6.
3	Closed throttle position check: (1) Connect SUZUKI scan tool to DLC. (2) With the ignition switch ON position, check "CLOSED THROT POS" in parameter data list. Throttle valve fully close : ON Throttle valve slight open : OFF Is each check result as specified?	Check for following: EVAP canister purge valve Accessory engine load PCV system Idle air passage EGR system A/C signal Transmission range switch signal	Go to Step 4.

4	Closed throttle position recheck: (1) With the ignition switch OFF position disconnect negative battery cable for 30 seconds and connect it. (2) Recheck closed throttle position referring to Step 3. Is each check result as specified?	Recheck engine idle speed.	Go to Step 5
5	TP sensor signal voltage check: (1) With the ignition switch ON position, check voltage between C5 and ground. Throttle valve fully close: 0.18–1 .03V Throttle valve fully open: 3.27–4.58V Is each check result as specified?	Substitute a known good ECM and recheck.	Check TP sensor referring to "TP sensor inspection" in this section.
6	IAC valve circuit check: (1) Check "R/W", "Bl/B" and "B/Bl" wire for open and short. Are they in good condition?	Go to Step 7.	Repair or replace.
7	IAC valve substitution: (1) Substitute a known good IAC valve. (2) Check IAC valve referring to "IAC valve inspection" in this section. Is check result in good condition?	IAC valve malfunction.	Substitute a known good ECM and recheck.

TABLE B-5 EVAPORATIVE EMISSION CONTROL SYSTEM CHECK

SYSTEM AND CIRCUIT DIAGRAM

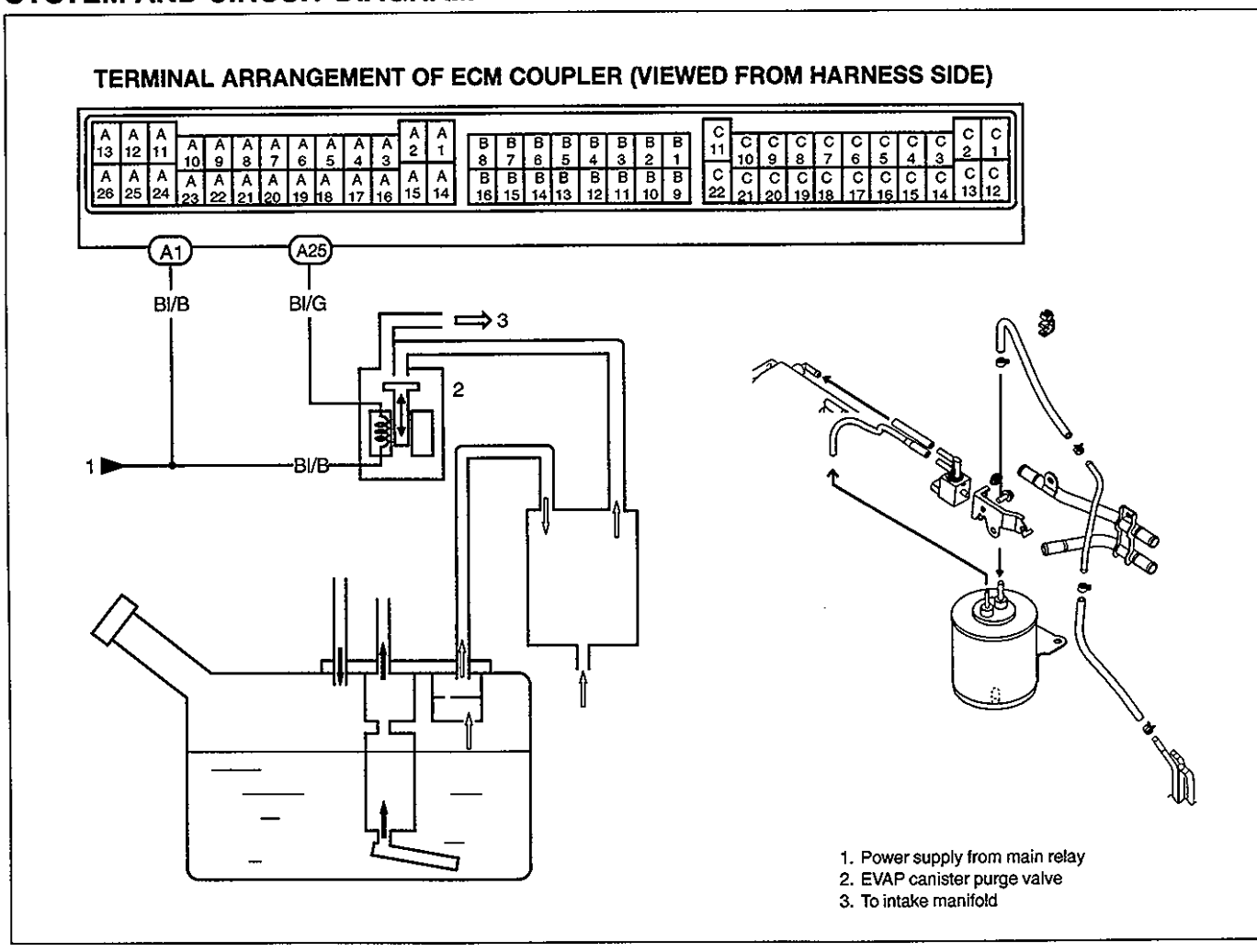

CIRCUIT DESCRIPTION

ECM transmits duty signal to EVAP canister purge valve.

INSPECTION

STEP	ACTION	YES	NO
1	Was "ENGINE DIAGNOSTIC FLOW TABLE" in section 6 performed?	Go to Step 2.	Perform "ENGINE DIAGNOSTIC FLOW TABLE".
2	(1) Check following items referring to inspection of each item in this section. Vacuum passage Vacuum hoses EVAP canister purge valve EVAP canister Are they in good condition?	Go to Step 3.	Repair or replace.
3	(1) With the ignition switch ON position, check voltage between "Bl/B" terminal of EVAP canister purge valve coupler and ground. Is voltage 10-14V?	Check "Bl/G" wire for open and short.	Check "Bl/B" wire for open and short.

TABLE B-6 EGR SYSTEM CHECK (IF EQUIPPED)

SYSTEM AND CIRCUIT DIAGRAM

TERMINAL ARRANGEMENT OF ECM COUPLER (VIEWED FROM HARNESS SIDE)

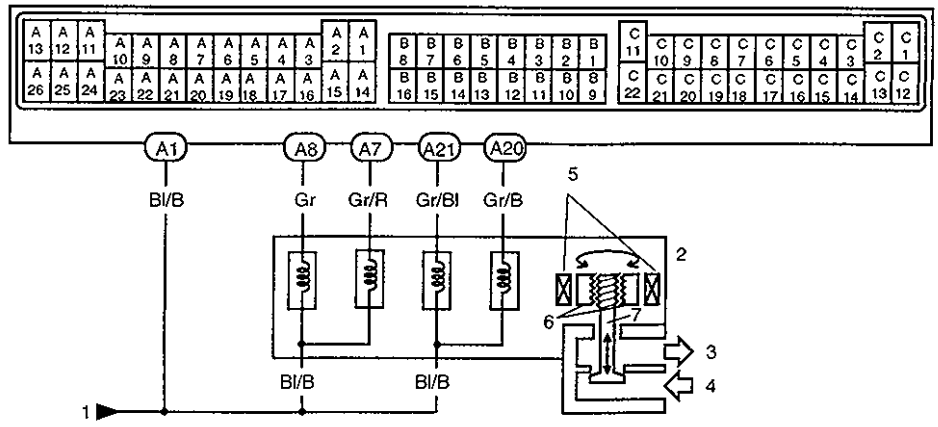

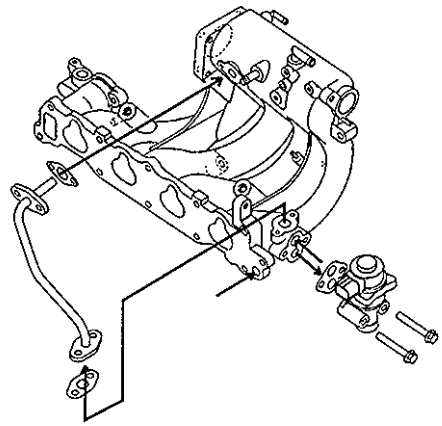

1. Power supply from main relay
2. EGR valve
3. Exhaust gas flow to intake manifold
4. Exhaust gas flow from exhaust manifold
5. EGR valve stepper motor coil
6. EGR valve stepper motor rotor
7. EGR valve stepper motor rod

SYSTEM DESCRIPTION

When EGR valve stepper motor receives open (close) signal from ECM, it turns in the open (close) direction according to the number of steps and pushes out (pulls up) the rod which is in mesh with the worm of the stepper motor. As the rod installed to the EGR valve opens by the amount corresponding to the number of steps of signal from ECM to let the exhaust gas flow from the exhaust manifold to the intake manifold.

INSPECTION

STEP	ACTION	YES	NO
1	Was "ENGINE DIAGNOSTIC FLOW TABLE" in section 6 performed?	Go to Step 2.	Perform "ENGINE DIAGNOSTIC FLOW TABLE".
2	(1) Check EGR valve referring to "EGR valve inspection" in this section. Is it in good condition?	Go to Step 3.	EGR valve malfunction.
3	(1) Install EGR valve. (2) Disconnect ECM coupler and check resistance between A1 and A7, A1 and A8, A1 and A20, A1 and A21. Is each resistance 20 – 24Ω (at 20°C)?	Check EGR passage. If OK, substitute a known good ECM and recheck.	Faulty "Bl/B", "Gr", "Gr/R", "Gr/Bl", "Gr/B" wire.

TABLE B-7 A/C SIGNAL AND A/C ON SIGNAL CIRCUIT CHECK (IF EQUIPPED)

CIRCUIT DIAGRAM

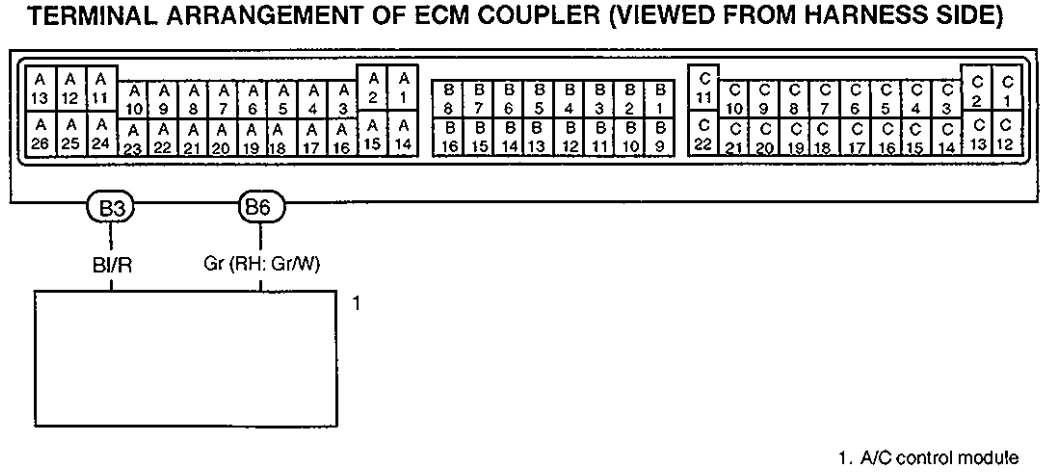

1. A/C control module

CIRCUIT DESCRIPTION

A/C control module transmits "A/C signal" to ECM when A/C ON conditions are satisfied on the A/C control module side.

ECM transmits "A/C ON signal" to A/C control module when "A/C signal" inputted to ECM and A/C ON conditions are satisfied on the ECM side. Then, A/C is operated.

INSPECTION

STEP	ACTION	YES	NO
1	A/C signal circuit check: (1) Check voltage between B3 terminal of ECM coupler and ground under following condition. Ignition switch ON position and A/C switch OFF: 10-14V Is check result as specified?	Go to Step 3.	Go to Step 2.
2	(1) Disconnect A/C control module coupler. (2) Check voltage between B3 terminal of ECM coupler and ground under following condition. Ignition switch ON position and A/C switch OFF: 10-l4V Is check result as specified?	A/C control module malfunction.	Faulty "Bl/R" wire. If OK, substitute a known good ECM and recheck.
3	A/C signal circuit check: (1) Check voltage between B3 terminal of ECM coupler and ground under following conditions. A/C is working: 0-2.0V Is check result as specified?	Go to Step 4.	Faulty "Bl/R" wire. If OK, substitute a known good A/C control module and recheck.
4	A/C ON signal circuit check: (1) Check voltage between B6 terminal of ECM coupler and ground under following conditions. A/C is working: 10-14V Is check result as specified?	Go to Step 5.	Faulty "Gr" (RH: "Gr/W") wire. If OK, substitute a known good A/C control module and recheck.
5	A/C ON signal circuit check: (1) Check voltage between B6 terminal of ECM coupler and ground under following conditions. Engine running and A/C is not working: 0-1.0V Is check result as specified?	A/C signal circuit and A/C ON signal circuit are in good condition.	Substitute a known good ECM and recheck.

TABLE B-8 A/C CONDENSER FAN MOTOR RELAY CONTROL SYSTEM CHECK (IF EQUIPPED)

CIRCUIT DIAGRAM

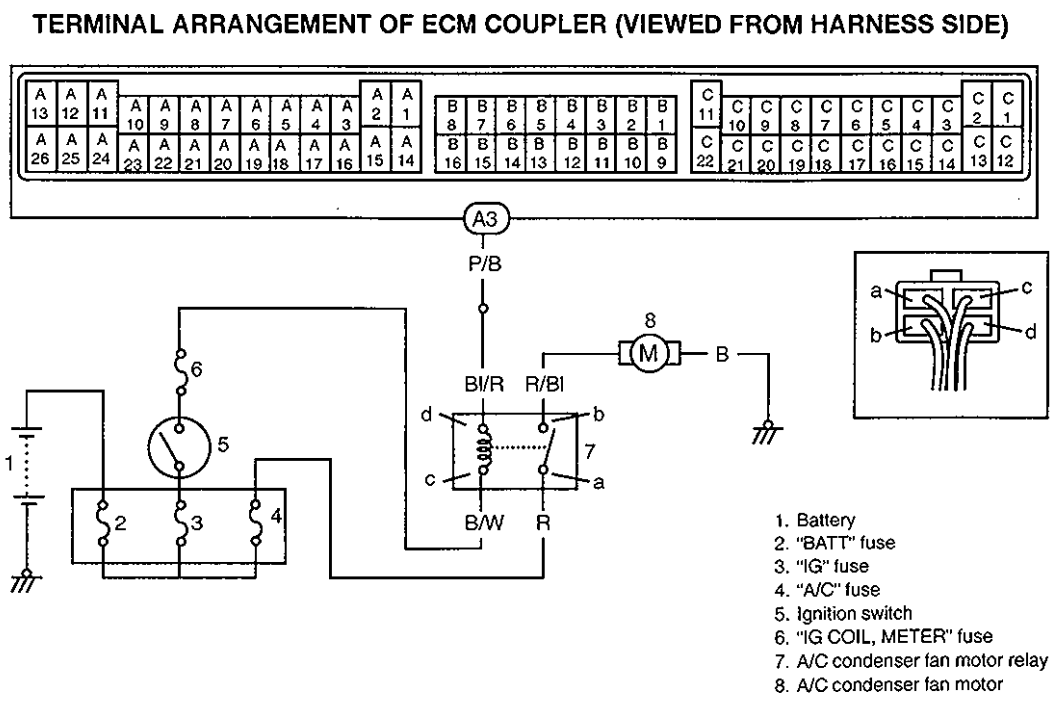

CIRCUIT DESCRIPTION

A/C condenser fan is turned ON by ECM when engine coolant temperature is higher than specified value regardless A/C ON or OFF.

INSPECTION

STEP	ACTION	YES	NO
1	A/C condenser fan operation check: (1) Check A/C condenser fan for operation. A/C condenser fan should be operated under following condition A or B only. A: When engine is running and A/C is operating. B: When engine coolant temperature is more than 113°C with the ignition switch ON position. Is check result as specified?	This system is in good condition.	Go to Step2.
2	A/C condenser fan control signal check: (1) Check voltage between A3 and ground under following conditions. Other than conditions A and B in Step 1:10-14V Is check result as specified?	Go to Step 3.	Fuse blown. Faulty "B/W", "Bl/R", "P/B" wire. Faulty A/C condenser fan motor relay.
3	A/C condenser fan control signal check: (1) Check voltage between A3 and ground under following conditions. Under condition A or B in Step 1: 0-1 V Is check result as specified?	Fuse blown. Faulty "R", "R/Bl", "B" wire. Faulty A/C condenser fan motor or relay.	Substitute a known-good ECM and recheck.

TABLE B-9 FUEL CUT OPERATION CHECK

CIRCUIT DIAGRAM

TERMINAL ARRANGEMENT OF ECM COUPLER (VIEWED FROM HARNESS SIDE)

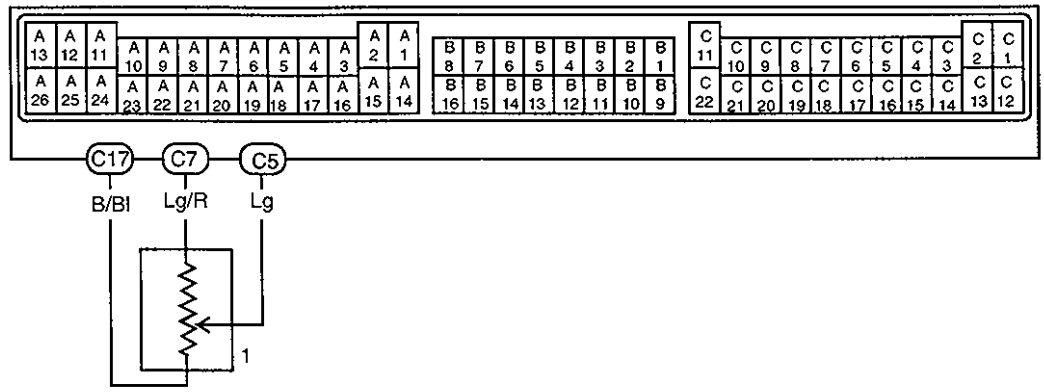

1. Throttle position sensor

CIRCUIT DESCRIPTION

Fuel injector stops when decelerating, so that unburned gas will not be exhausted and it starts again when above conditions for fuel recovery are fulfilled.

INSPECTION

STEP	ACTION	YES	NO
1	Was "ENGINE DIAGNOSTIC FLOW TABLE" in section 6 performed?	Goto Step 2.	Perform "ENGINE DIAGNOSTIC FLOW TABLE".
2	Closed throttle position check: (1) Connect Tech-1 to DLC. (2) With the ignition switch ON position, check "CLOSED THROT POS" in parameter data list. Throttle valve fully close : ON Throttle valve slight open : OFF Is each check result as specified?	Substitute a known good ECM and recheck.	Go to Step 3.
3	Closed throttle position recheck: (1) With the ignition switch OFF position disconnect negative battery cable for 30 seconds and connect it. (2) Recheck closed throttle position referring to Step 3. Is each check result as specified?	Recheck fuel cut operation.	Go to Step 4.
4	TP sensor signal voltage check: (1) With the ignition switch ON position, check voltage between C5 and ground. Throttle valve fully close: 0.18-1.03V Throttle valve fully open: 3.27-4.58V Is each check result as specified?	Substitute a known good ECM and recheck fuel cut operation.	Check TP sensor referring to "TP sensor inspection" in this section.

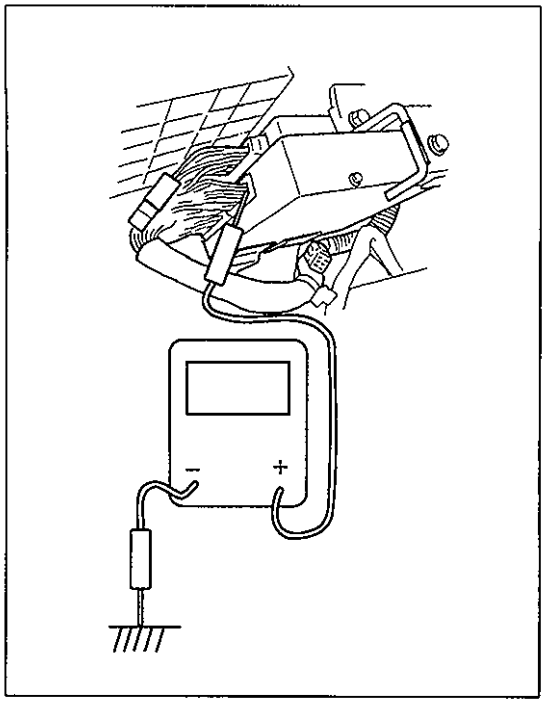

INSPECTION OF ECM AND ITS CIRCUITS

ECM and its circuits can be checked at ECM wiring couplers by measuring voltage and resistance.

CAUTION:
ECM cannot be checked by itself. It is strictly prohibited to connect voltmeter or ohmmeter to ECM with couplers disconnected from it.

Voltage Check

1) Remove glove box.
2) Check voltage at each terminal of couplers connected.

NOTE:
As each terminal voltage is affected by the battery voltage, confirm that it is 11 V or more when the ignition switch is turned ON position.

TER-MINAL	COLOR	CIRCUIT	VOLTAGE	CONDITION
A1	Bl/B	Power source	10 – 14 V	Turn the ignition switch ON position
A2	B	Ground	–	–
A3	P/B	A/C condenser fan motor relay (if equipped)	0 – 1.0 V	A/C is working
			10 – 14 V	A/C is not working
A4	W/G	Fuel pump relay	0 – 2.5 V	For 2 seconds after turning the ignition switch ON position leaving engine OFF
A5	V/Y	Malfunction indicator lamp	10 – 14 V	Engine running
			0 – 1.0 V	Turn the ignition switch ON position leaving engine OFF
A6	Br/W	Ignition coil assembly for No.1 and No.4	0 – 1.0 V	Turn the ignition switch ON position leaving engine OFF
A7	Gr/R	EGR valve (stepper motor coil 3, if equipped)	10 – 14 V	Turn the ignition switch ON position leaving engine OFF
A8	Gr	EGR valve (stepper motor coil 1, if equipped)	10 – 14 V	Turn the ignition switch ON position leaving engine OFF
A9	W/G	Fuel injector No.3	10 – 14 V	Turn the ignition switch ON position leaving engine OFF
A10	R/W	Fuel injector No.1	10 – 14 V	Turn the ignition switch ON position leaving engine OFF
A11	P/B	Heater of HO2S (if equipped)	10 – 14 V	Turn the ignition switch ON position leaving engine OFF
A12	–	–	–	–
A13	B/Bl	Ground	–	–
A14	Bl/B	Power source	10 – 14 V	Turn the ignition switch ON position
A15	W	Power source for back up	10 – 14 V	Turn the ignition switch ON and OFF position
A16	B/W	Ignition switch	10 – 14 V	Turn the ignition switch ON position
A17	Bl	Main relay	0 – 2.0 V	Turn the ignition switch ON position
A18	R/W	IAC valve	0 – 4.2 V	Engine running at idle speed
A19	Br/B	Ignition coil assembly for No.2 and No.3	0 – 1.0 V	Turn the ignition switch ON position leaving engine OFF
A20	Gr/B	EGR valve (stepper motor coil 4, if equipped)	10 – 14 V	Turn the ignition switch ON position leaving engine OFF
A21	Gr/Bl	EGR valve (stepper motor coil 2, if equipped)	10 – 14 V	Turn the ignition switch ON position leaving engine OFF
A22	W/B	Fuel injector No.4	10 – 14 V	Turn the ignition switch ON position leaving engine OFF

A23	R/G	Fuel injector No.2	10 – 14 V	Turn the ignition switch ON position leaving engine OFF
A24	–	–	–	–
A25	Bl/G	EVAP canister purge valve (if equipped)	10 – 14 V	Turn the ignition switch ON position leaving engine OFF
A26	B/Bl	Ground	–	–
B1	Y/B	Data link connector	4 – 5 V	Turn the ignition switch ON position
B2	P (RH: P/W)	Test switch terminal	4 – 5 V	Turn the ignition switch ON position
B3	Bl/R	A/C signal (if equipped)	0 – 2.0 V	A/C is working
			10 – 14 V	A/C is not working
B4	R/Y	Lighting switch	10 – 14 V	Lighting switch ON
			0 – 1.3 V	Lighting switch OFF
B5	G	ABS signal (if equipped)	10 – 14 V	Turn the ignition switch ON position
B6	Gr (RH: Gr/W)	A/C ON signal (if equipped)	10 – 14 V	A/C is working
			0 – 1.0 V	A/C is not working
B7	Br	Tacho meter	–	–
B8	R/G	Duty output terminal	0 – 1.0 V	Turn the ignition switch ON position
B9	G/W	Stop lamp switch	10 – 14 V	Brake pedal depressed
B10	W/Bl	Diag. Switch terminal	4 – 5 V	Turn the ignition switch ON position
B11	Bl/G	Heater blower switch	0 – 2.0 V	Turn the ignition switch ON position and heater blower switch ON
			10 – 14 V	Turn the ignition switch ON position and heater blower switch OFF
B12	R/W	Rear defogger switch (if equipped)	10 – 14 V	Turn the ignition switch ON position and rear defogger switch ON
			0 – 1.3 V	Turn the ignition switch ON position and rear defogger switch OFF
B13	G/Y	Park/ Neutral position signal	10 – 14 V	Turn the ignition switch ON position and shift select switch in P or N range
			0 – 1.6 V	Turn the ignition switch ON position and shift select switch in other than P and N range
B14	R	R-range signal	10 – 14 V	Turn the ignition switch ON position and shift select switch in R range
			0 – 1.3 V	Turn the ignition switch ON position and shift select switch in other than R range
B15	B/Bl	Throttle opening signal	9.4 – 13.2 V	Turn the ignition switch ON position and throttle valve fully closed
			4.4 – 6.2 V	Turn the ignition switch ON position and throttle valve fully open
B16	B/Y	Overdrive cut signal	0 – 1.0 V	Turn the ignition switch ON position and ECT less than 60°C
			10 – 14 V	Turn the ignition switch ON position and ECT more than 60°C
C1	W	Camshaft position sensor	0 – 0.8 or 4 – 5 V	Turn the ignition switch ON position
C2	Y	Vehicle speed sensor	deflect between 0 – 1.6 and 4 – 14 V	Turn the ignition switch ON position, rear right wheel turned slowly with rear left wheel locked
C3	R/ Bl	CO adjusting resistor (w/o H2S)	0 – 5 V	Turn the ignition switch ON position
C4	Lg (RH: Lg/ Y)	Manifold absolute pressure sensor	3.3 – 4.0 V	Turn the ignition switch ON position leaving engine OFF
C5	Lg	Throttle position sensor	0.18 – 1.03 V	Turn the ignition switch ON position and throttle valve fully closed
			3.27 – 4.58 V	Turn the ignition switch ON position and throttle valve fully open
C6	Lg (RH: Lg/W)	Engine coolant temp. sensor	0.55 – 0.95 V	Turn the ignition switch ON position (ECT=80°C)
C7	Lg/R	Power source for MAP sensor, TP sensor, CO adjusting resistor	4 – 5 V	Turn the ignition switch ON position.
C8, C9, C10		–	–	–
C11	B/R	Engine start signal	6 – 14 V	While engine cranking
C12, C13		–	–	–

C14	Or (RH: Or/G)	Ignition timing adjusting resistor	0 – 5 V	Turn the ignition switch ON position
C15	Or	Heated oxygen sensor	deflect between 0 – 0.3 and 0.7 – 1.0 V	Engine running at 2000 r/min after warmed up
C16	Lg/B	Intake air temp. sensor	2.0 – 2.7 V	Turn the ignition switch ON position (IAT=20°C)
C17	B/Bl	Ground	–	–
C18	B/Bl	Ground	–	–
C19, C20, C21		–	–	–
C22	Bl/Or	Power steering pressure switch	0 – 1.3 V	While engine running at idle speed, turning steering wheel to the right or left as far as it stops
			10 – 14 V	Turn the ignition switch ON position

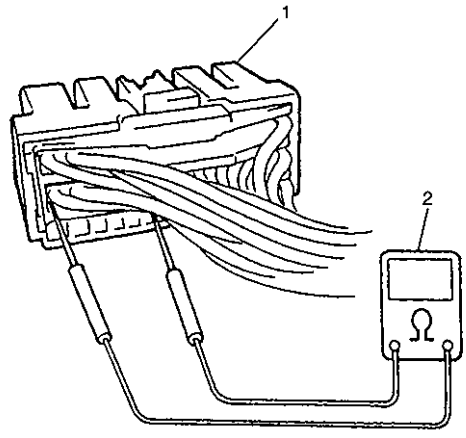

1. ECM coupler disconnected
2. Ohmmeter

Resistance Check

1) Disconnect couplers from ECM with the ignition switch OFF position.

CAUTION:
Never touch terminals of ECM itself or connect voltmeter or ohmmeter.

2) Check resistance between each pair of terminals of disconnected couplers as listed in following table.

CAUTION:
- **Be sure to connect ohmmeter probe from wire harness side of coupler.**
- **Be sure to turn the ignition switch OFF position for this check.**
- **Resistance in table represents that when parts temperature is 20 °C (68 °F).**

CIRCUIT		TERMINALS	STANDARD RESISTANCE	CONDITION
Fuel injector	No.1 cylinder	A10 – A1	10 – 15 Ω	—
	No.2 cylinder	A23 – A1	10 – 15 Ω	—
	No.3 cylinder	A9 – A1	10 – 15 Ω	—
	No.4 cylinder	A22 – A1	10 – 15 Ω	—
EGR valve	No.1 coil	A8 – A1	20 – 24 Ω	—
	No.2 coil	A21 – A1	20 – 24 Ω	—
	No.3 coil	A7 – A1	20 – 24 Ω	—
	No.4 coil	A20 – A1	20 – 24 Ω	—
EVAP canister purge valve		A25 – A1	30 – 34 Ω	—
HO2S heater		A11 – A1	11 – 15 Ω	—
Main relay		A17 – A15	56 – 146 Ω	—
Fuel pump relay		A4 – A16	56 – 146 Ω	—
TP sensor		B15 – C17	0.17 – 11.4 kΩ	Throttle valve fully close
		B15 – C17	1.72 – 15.5 kΩ	Throttle valve fully open
IAT sensor		C16 – C17	2.09 – 2.81 kΩ	IAT at 20 °C
ECT sensor		C6 – C17	2.28 – 2.61 kΩ	ECT at 20 °C

ON-VEHICLE SERVICE

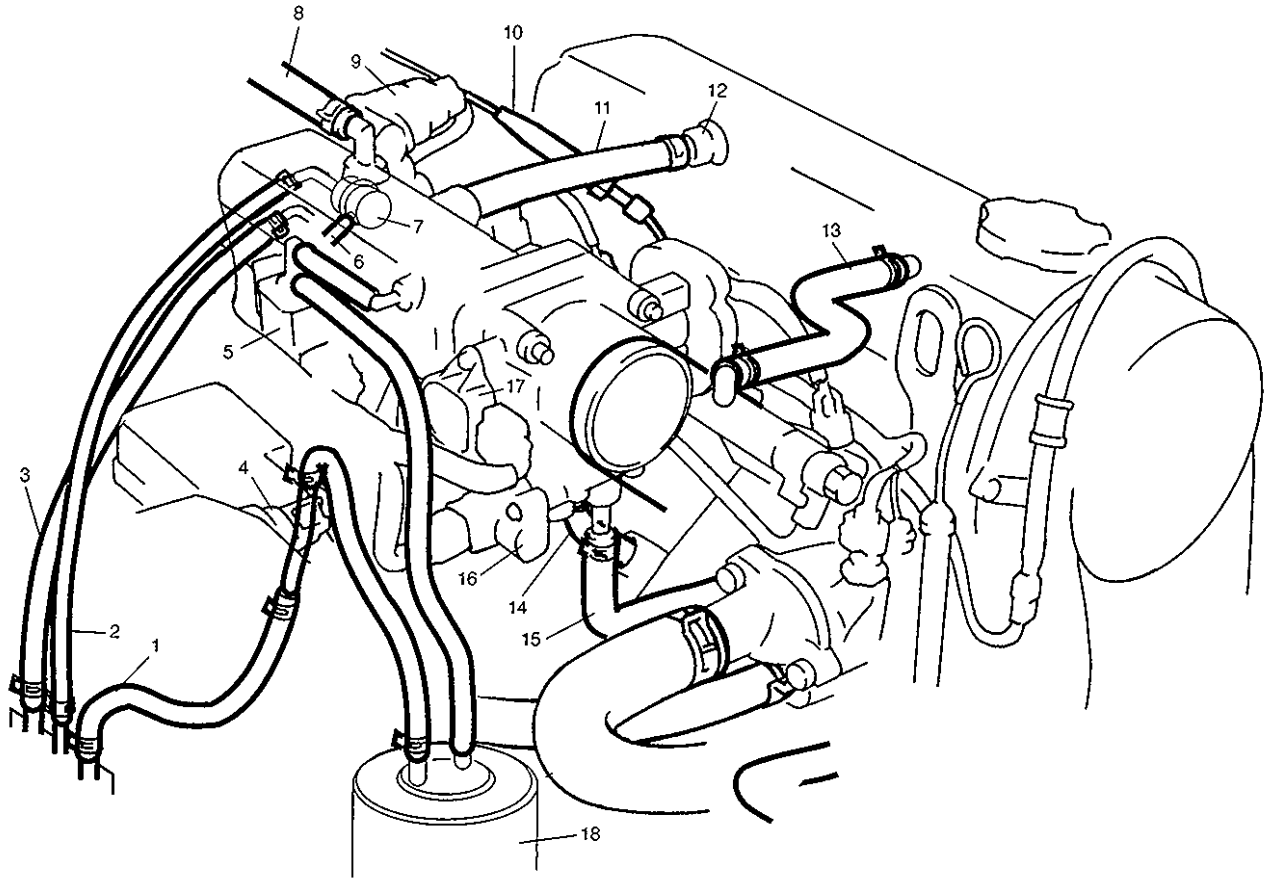

1. EVAP hose (from fuel tank)
2. Fuel return hose
3. Fuel feed hose
4. IAT sensor
5. EVAP canister purge valve
6. Fuel pressure regulator vacuum hose
7. Fuel pressure regulator
8. Brake booster hose
9. MAP sensor
10. Accelerator cable
11. PCV hose
12. PCV valve
13. Breather hose
14. Coolant outlet hose
15. Coolant inlet hose
16. IAC valve
17. TP sensor
18. EVAP canister

GENERAL

When hoses are disconnected and system components are removed for service, reinstall components properly, and route and connect hoses correctly after service. Refer to figure on previous page for proper routing of hoses.

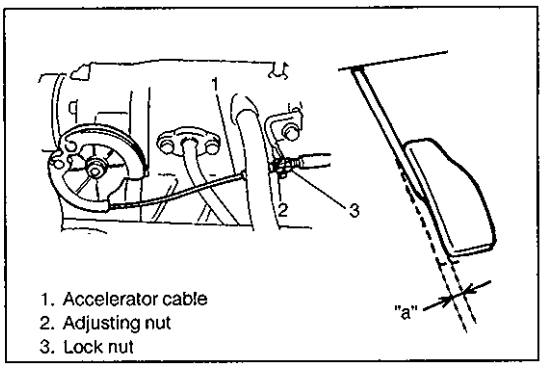

1. Accelerator cable
2. Adjusting nut
3. Lock nut

ACCELERATOR CABLE ADJUSTMENT

1) With throttle valve closed, check accelerator pedal play which should be within following specification.

   Pedal play "a": 2 – 7 mm (0.08 – 0.27 in.)

   If measured value is out of specification, adjust it to specification with cable adjusting nut.

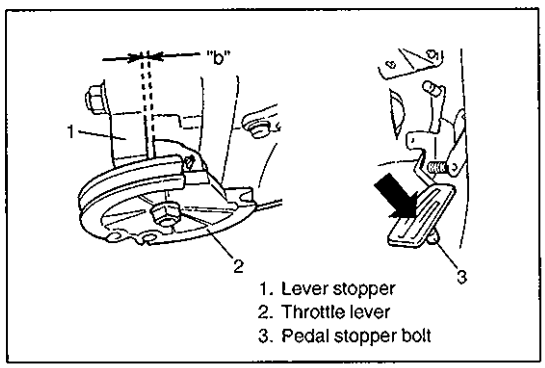

1. Lever stopper
2. Throttle lever
3. Pedal stopper bolt

2) With accelerator pedal depressed fully, check clearance between throttle lever and lever stopper (throttle body) which should be within following specification.

   Clearance "b" : 0.5 – 2.0 mm (0.02 – 0.07 in.)
   (With pedal depressed fully)

   If measured value is out of specification, adjust it to specification by changing height of pedal stopper bolt.

IDLE SPEED/IDLE AIR CONTROL (IAC) DUTY INSPECTION

Before idle speed/IAC duty check, make sure of the following.

- Lead wires and hoses of engine/emission control systems are connected securely.
- Accelerator cable has some play, that is, it is not tight.
- Valve lash is checked and adjusted according to maintenance schedule.
- Ignition timing is within specification.
- All accessories (wipers, heater, lights, A/C, etc.) are out of service.
- Air cleaner has been properly installed and is in good condition.
- ECM does not detect any malfunction DTC.

After above items are all confirmed, check idle speed and IAC duty as follows.

NOTE:
Before starting engine, place transmission gear shift lever in "Neutral" (shift selector lever to "P" range for A/T vehicle), and set parking brake and block drive wheels.

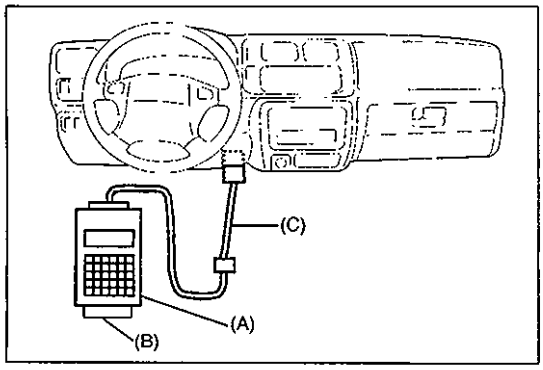

[Using SUZUKI scan tool]

1) Connect SUZUKI scan tool to DLC with the ignition switch OFF position.

   Special Tool
   (A): 09931-76011 (SUZUKI scan tool)
   (B): Mass storage cartridge
   (C): 09931-76030 (16/14 pin DLC cable)

2) Warm up engine to normal operating temperature.
3) Check IAC duty and idle speed by using "IAC CAL" mode of SUZUKI scan tool.

	MT		AT	
A/C	OFF	ON	OFF	ON
Engine speed [r / min]	750±50	900±50	750±50	875±50
IAC Duty [%]	4~30	–	4~30	–

   If duty and/or idle speed is out of specifications, check idle air control system referring to Diagnostic Flow Table B-4 "IDLE AIR CONTROL SYSTEM CHECK" in this section.
4) Check that specified engine idle speed is obtained with A/C ON if vehicle is equipped with A/C.
   If not, check A/C ON signal circuit and idle air control system.

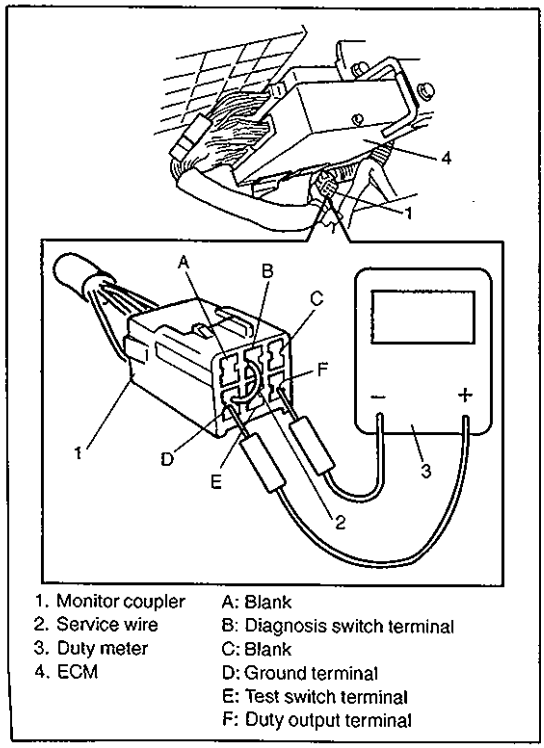

1. Monitor coupler
2. Service wire
3. Duty meter
4. ECM

A: Blank
B: Diagnosis switch terminal
C: Blank
D: Ground terminal
E: Test switch terminal
F: Duty output terminal

[Not using SUZUKI scan tool]

1) Disconnect scan tool from DLC if connected.
2) Warm up engine to normal operating temperature.
3) Stop engine and connect duty meter between duty output terminal and ground terminal of monitor connector.
4) Using service wire, ground diagnosis switch terminal in monitor connector.
5) Set tachometer.
6) Start engine and warm it up completely.
7) Check IAC duty and idle speed. If duty and/or idle speed is out of specifications, check idle air control system referring to Diagnostic Flow Table B-4 "IDLE AIR CONTROL SYSTEM CHECK" in this section.

	MT		AT	
A/C	OFF	ON	OFF	ON
Engine speed [r / min]	750±50	900±50	750±50	875±50
IAC Duty [%]	4~30	–	4~30	–

NOTE:
IAC duty can be checked roughly by using voltmeter. IAC duty to voltage relation is as follows.

ON DUTY METER INDICATION (%)	OFF DUTY METER INDICATION (%)	VOLTMETER INDICATION (V)
0	100	0
50	50	0.5 x VB
100	0	VB

- **"OFF DUTY METER" is such duty meter that indicates approx. 100% when terminal voltage is approx. "0V".**
- **"VB" represents battery voltage while engine of vehicle being checked is running.**

7) Remove service wire from monitor connector.
8) Check that specified engine idle speed is obtained with A/C ON if vehicle is equipped with A/C.
   If not, check A/C ON signal circuit and idle air control system.

IDLE MIXTURE INSPECTION/ADJUSTMENT (VEHICLE WITHOUT HEATED OXYGEN SENSOR)

All vehicles not equipped with heated oxygen sensor are shipped with their CO% factory adjusted as follows.

Engine idle mixture (CO %)	0.8 – 1.3 % at specified idle speed

Idle mixture adjustment should never be changed from the original factory setting. However, if during diagnosis, the check indicates idle mixture to be the cause of a driver performance complaint or emission failure, the idle mixture can be adjusted using the following procedures.

NOTE:
For this inspection and adjustment, exhaust gas tester (CO meter) and engine tachometer are necessary.

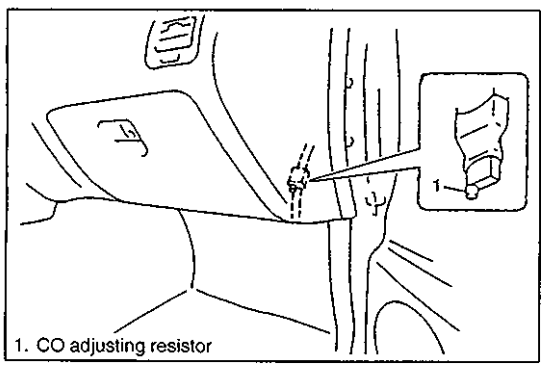

1. CO adjusting resistor

1) Check idle speed according to "Idle Speed Inspection" section.
2) Using exhaust gas tester, check that idle mixture CO% is within above specification. If it is out of specification, adjust it to specification by turning resistor knob.
3) If idle mixture has been adjusted, confirm that idle speed is within specification.

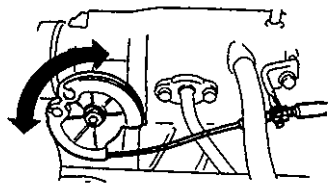

AIR INTAKE SYSTEM

THROTTLE BODY

On-Vehicle Inspection

- Check that throttle valve lever moves smoothly.

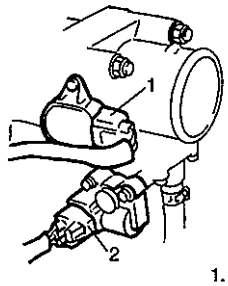

1. TP sensor coupler
2. IAC valve coupler

Removal

1) Disconnect negative cable at battery.
2) Drain cooling system referring to section 6B.
3) Disconnect accelerator cable from throttle body.
4) Disconnect electric coupler from TP sensor and IAC valve.
5) Disconnect coolant hoses from throttle body.
6) Remove throttle body from intake manifold.

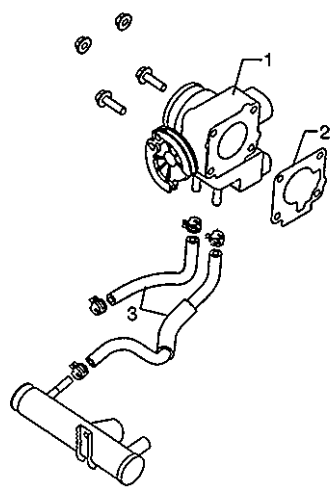

1. Throttle body
2. Throttle body gasket
3. Coolant hoses

CAUTION:
TP sensor, idle air control valve or other components containing rubber must not be places in a solvent or cleaner bath.
A chemical reaction will cause these parts to swell, harden or get distorted.

Installation

1) Clean mating surfaces and install throttle body gasket to intake manifold.
   Use new gasket.
2) Install throttle body to intake manifold and tighten bolts and nuts to specified torque.
3) Connect coolant hoses to throttle body.
4) Connect couplers to TP sensor and IAC valve securely.
5) Install air cleaner outlet hose.
6) Connect accelerator cable and adjust cable play to specification referring to previous page.
7) Refill cooling system referring to section 6B.
8) Connect negative cable at battery.

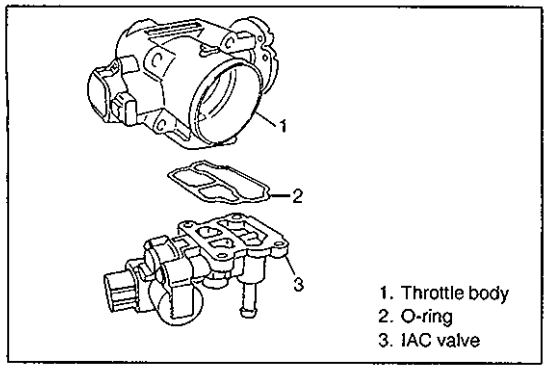

1. Throttle body
2. O-ring
3. IAC valve

IDLE AIR CONTROL VALVE (IAC VALVE)

Removal

1) Remove throttle body. (Refer to throttle body removal.)
2) Remove IAC valve from throttle body.

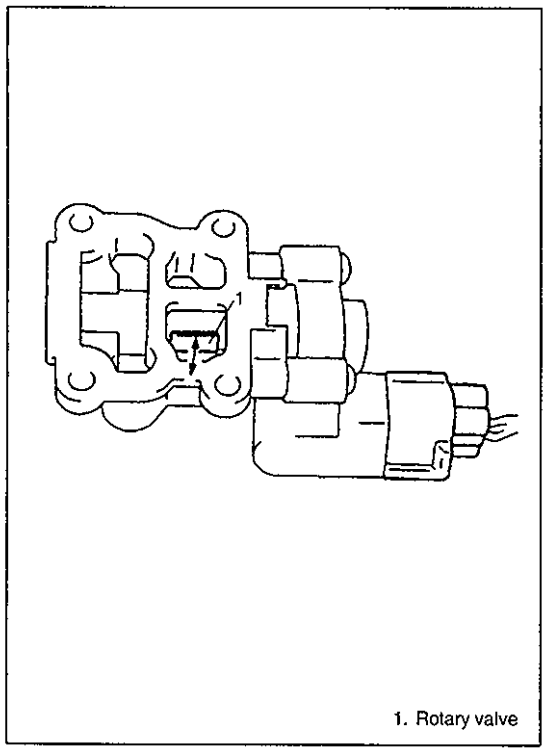

1. Rotary valve

Inspection

1) Connect each connector to IAC valve and TP sensor.
2) Check that rotary valve of IAC valve opens and closes once and then stops in about 60 ms as soon as the ignition switch is turned ON position.

NOTE:

- **This check should be performed by two people, one person turns the ignition switch ON position while the other checks valve operation.**
- **As valve operation is momentary, it may be overlooked. To prevent this, perform this operation check 3 times or more continuously.**
  If rotary valve of IAC valve does not operate at all, check wire harness for open and short. If wire harness are in good condition, replace IAC valve and recheck.
- **The built-in IC may brake when the battery is connected between terminals or installation resistance gauge is connected between terminals.**

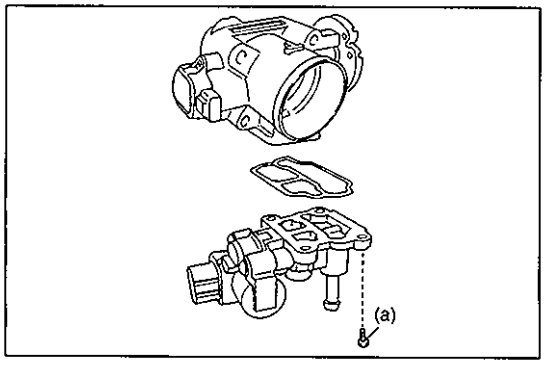

Installation

1) Install new O-ring to IAC valve.
2) Install IAC valve to throttle body.
   Tighten IAC valve screws to specified torque.

   Tightening Torque
   (a): 3.3 N·m (0.33 kg-m, 2.5 lb-ft)

3) Install throttle body to intake manifold referring to throttle body installation.

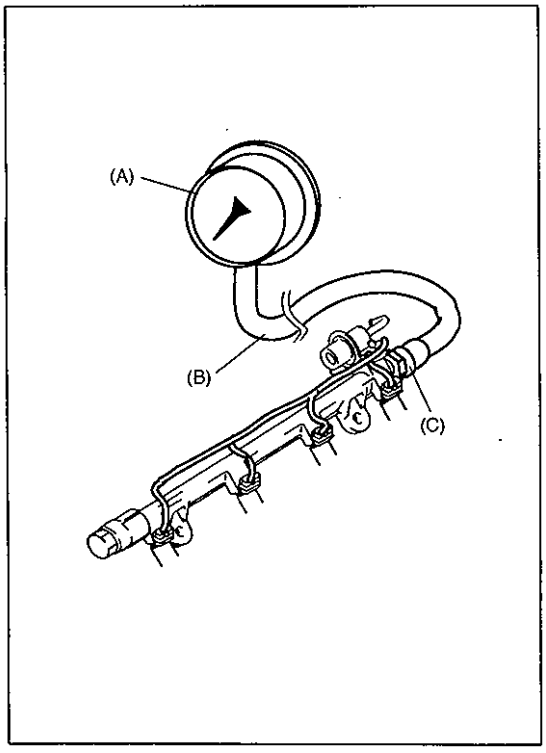

FUEL DELIVERY SYSTEM

FUEL PRESSURE INSPECTION

1) Relieve fuel pressure in fuel feed line referring to p. 6-4.
2) Using backup wrench, loosen plug bolt on fuel delivery pipe and remove it. Connect special tools (fuel pressure gauge) to delivery pipe.

> **CAUTION:**
> **A small amount of fuel may be released when plug bolt is loosened. Place container under the bolt or cover bolt hole with a shop cloth so that released fuel is caught in container or absorbed in cloth. Place that cloth in an approved container.**

Special Tool
(A): 09912-58441
(B): 09912-58431
(C): 09919-46010

3) Check that battery voltage is above 11V.

CONDITION	FUEL PRESSURE
With fuel pump operating and engine stopped	270 – 310 KPa 2.7 – 3.1 kg/cm^2 38.4 – 44.0 psi
At specified idle speed	210 – 260 KPa 2.1 – 2.6 kg/cm^2 29.8 – 37.0 psi
With 1 min. after engine (fuel pump) stop (Pressure reduces as time passes)	over 200 kPa 2.0 kg/cm^2 28.4 psi

4) Turn the ignition switch ON position to operate fuel pump and after 3 seconds turn it OFF. Repeat this 3 or 4 times and then check fuel pressure.
5) Start engine.
6) Measure fuel pressure at idling.

   If measured pressure doesn't satisfy specification, go to "Diagnostic Flow Table B-3" in this section.

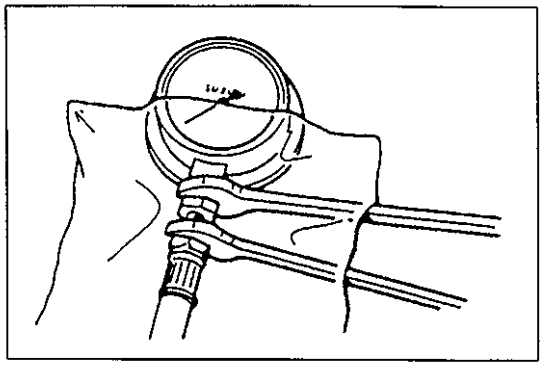

7) After checking fuel pressure, remove fuel pressure gauge.

> **CAUTION:**
> **As fuel feed line is still under high fuel pressure, make sure to release fuel pressure according to following procedures.**
> - **Place fuel container under joint.**
> - **Cover joint with rag and loosen joint nut slowly to release fuel pressure gradually.**

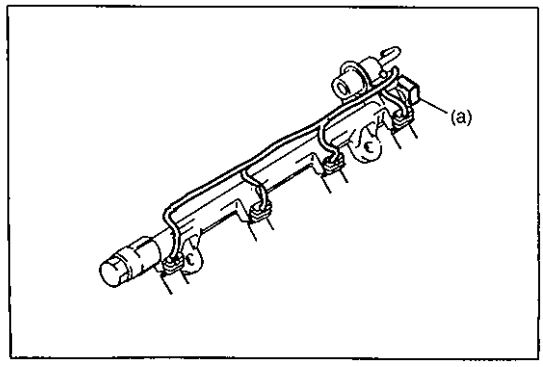

8) Install plug bolt to fuel delivery pipe.
   Use new gasket.
   Tighten it to specified torque, using backup wrench.

   Tightening Torque
   (a): 30 N·m (3.0 kg-m, 22.0 lb-ft)

9) With engine "OFF" and the ignition switch ON position, check for fuel leaks.

FUEL PUMP

On-Vehicle Inspection

CAUTION:
When fuel filler cap is removed in any procedure, work must be done in a well-ventilated area, keep away from any open flames and without smoking.

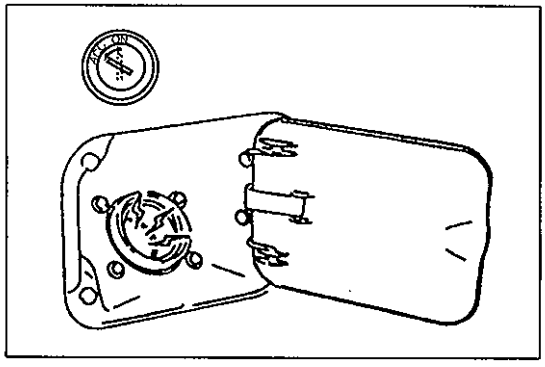

1) Remove filler cap and turn the ignition switch ON position. Then fuel pump operating sound be heard from fuel filler for about 2 seconds and stop. Be sure to reinstall fuel filler cap after checking.
   If above check result is not satisfactory, advance to "Diagnostic Flow Table B-1" in this section.

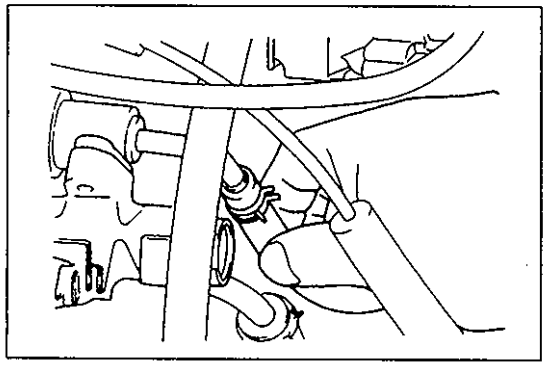

2) Fuel pressure should be felt at fuel return hose for 2 seconds after turning the ignition switch ON position.
   If fuel pressure is not felt, advance to "Diagnostic Flow Table B-3" in this section.

Removal

1) Remove fuel tank from body according to procedure described in section 6C and remove fuel pump from fuel tank.

Inspection

Check fuel pump filter for evidence of dirt and contamination. If present, clean and check for presence of dirt in fuel tank.

Installation

1) Install fuel pump to fuel tank and then install fuel tank to body according to procedure described in section 6C.

FUEL PRESSURE REGULATOR

On-Vehicle Inspection

Perform fuel pressure inspection according to procedure described in "Fuel Pressure Inspection".

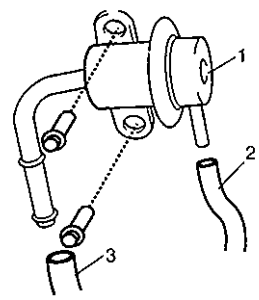

1. Fuel pressure regulator
2. Vacuum hose
3. Fuel return hose

Removal

1) Relieve fuel pressure according to procedure described on p. 6-4.
2) Disconnect battery negative cable from battery.
3) Disconnect vacuum hose from fuel pressure regulator.
4) Remove fuel pressure regulator from fuel delivery pipe.

CAUTION:
A small amount of fuel may be released when it is from delivery pipe.
Place a shop cloth under delivery pipe so that released fuel is absorbed in it.

5) Disconnect fuel return hose from fuel pressure regulator.

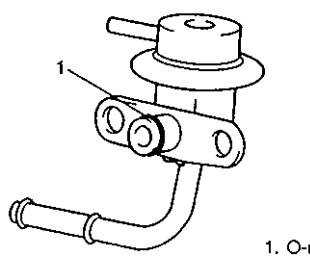

1. O-ring

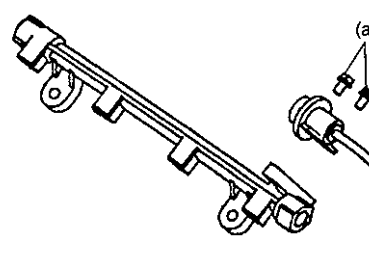

Installation

For installation, reverse removal procedure and note following precautions.

- Use new O-ring.
- Apply thin coat of gasoline to O-ring to facilitate installation.
- Tighten fuel pressure regulator bolts to specified torque.

Tightening Torque
(a): 10 N·m (1.0 kg-m, 7.5 lb-ft)

- With engine "OFF" and the ignition switch ON position, check for fuel leaks around fuel line connection.

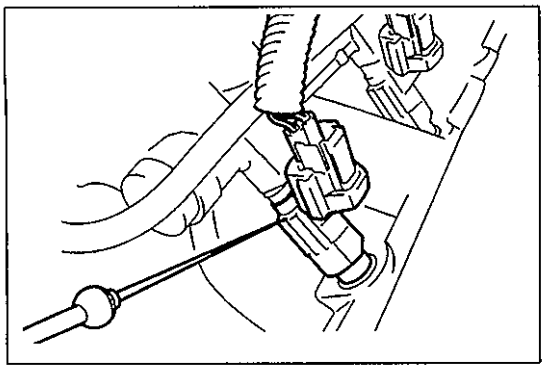

FUEL INJECTOR

On-Vehicle Inspection

1) Using sound scope or such, check operating sound of injector when engine is running or cranking.
   Cycle of operating sound should vary according to engine speed.
   If no sound or an unusual sound is heard, go to "Diagnostic Flow Table B2" in this section.

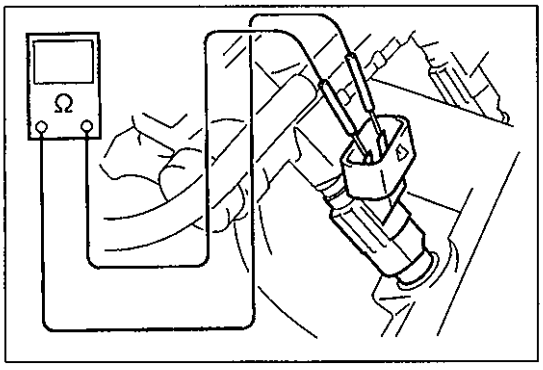

2) Disconnect coupler from injector, connect ohmmeter between terminals of injector and check resistance.

   Resistance of injector: 10 – 15 Ω at 20°C, 68 °F

   If resistance is out of specification, replace.
3) Connect coupler to injector securely.

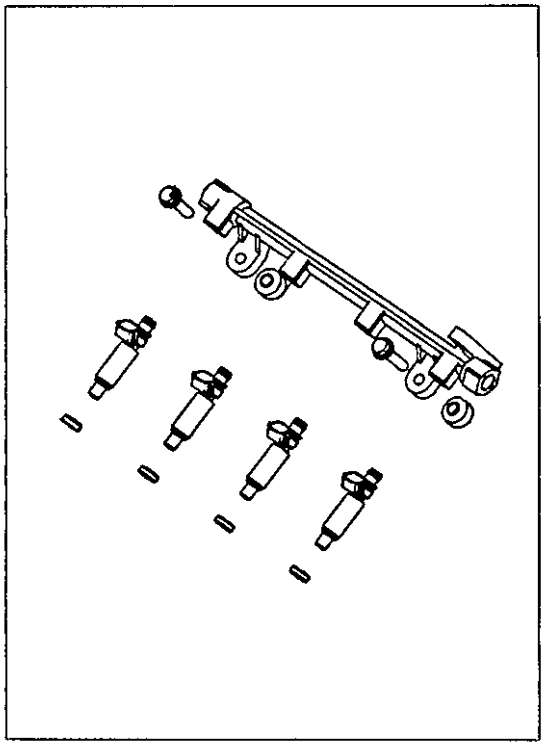

Removal

NOTE:
Perform fuel pressure inspection before fuel injector inspection.

1) Relieve fuel pressure according to procedure described on p. 6-4.
2) Disconnect battery negative cable at battery.
3) Disconnect coupler from each injector.
4) Remove fuel delivery pipe bolts.
5) Remove fuel injector(s) from delivery pipe and intake manifold.

> **WARNING:**
> **A small amount of fuel may be released when fuel injector is removed. In order to reduce the chance of personal injury, cover than with a shop cloth.**

Inspection

> **WARNING:**
> **As fuel is injected in this inspection, perform in a well ventilated area and away from open flames.**
> **Use special care to prevent sparking when connecting and disconnecting test lead to and from battery.**

NOTE:
Confirm fuel pressure before this inspection.

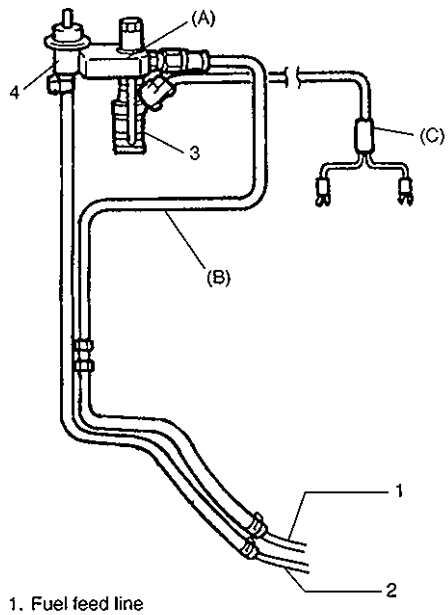

1. Fuel feed line
2. Fuel return line
3. Fuel injector
4. Fuel pressure regulator

1) Install injector and fuel pressure regulator to special tool (injector checking tool).

Special Tool
(A): 09912-58421

2) Connect special tools (hoses and attachment) to hose and pipe of vehicle.

Special Tool
(B): 09912-58431

3) Connect special tool (test lead) to injector.

Special Tool
(C): 09930-88530

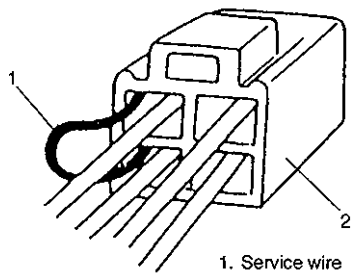

1. Service wire
2. Fuel pump relay coupler

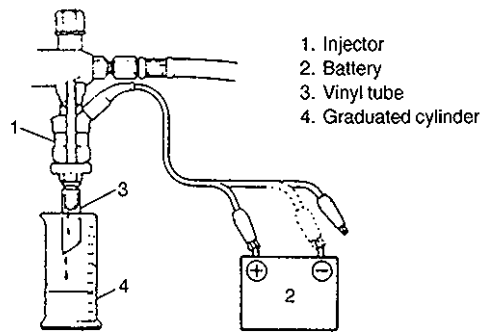

1. Injector
2. Battery
3. Vinyl tube
4. Graduated cylinder

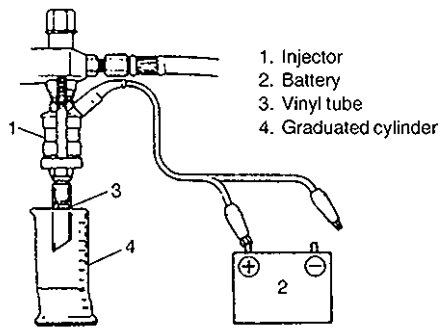

1. Injector
2. Battery
3. Vinyl tube
4. Graduated cylinder

4) Install suitable vinyl tube onto injector nozzle to prevent fuel from splashing out when injecting.
5) Put graduated cylinder under injector as shown.
6) Remove fuel pump relay.
7) To operate fuel pump and apply fuel pressure to injector, using wire harness as thick as the one used for fuel pump circuit, connect two terminals of relay connector as shown in figure.

CAUTION:
Check to make sure that connection is made between correct terminals. Wrong connection can cause damage to ECM, wire harness, etc.

Turn the ignition switch ON position.

8) Apply battery voltage to injector for 15 seconds and measure injected fuel volume with graduated cylinder.
Test each injector two or three times.
If not within specification, replace injector.

Injected fuel volume:
43 – 47 cc/15 sec. (1.59/1.51 – 1.59/1.65 US/Imp. oz/15 sec.)

9) Check fuel leakage from injector nozzle. Do not operate injector for this check (but fuel pump should be at work).
If fuel leaks more than following specifications, replace.

Fuel leakage: Less than 1 drop/min.

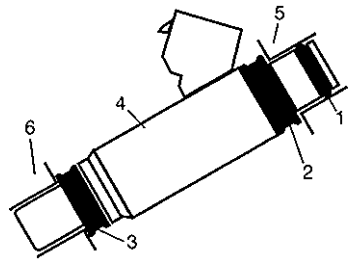

1. O-ring
2. Grommet
3. Cushion
4. Injector
5. Delivery pipe
6. Intake manifold

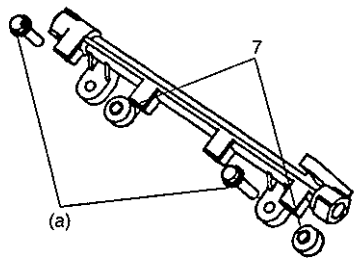

7. Insulator

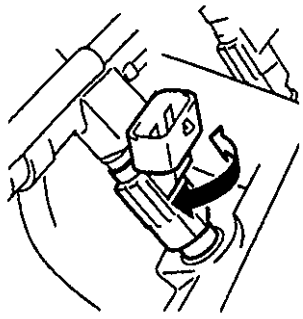

Installation

1) Replace injector O-ring with new one using care not to damage it. Install grommet to injector.
2) Check if insulator is scored or damaged. If it is, replace with new one.
   Install insulators and cushions to intake manifold.
3) Apply thin coat of fuel to O-rings and then install injectors into delivery pipe and intake manifold.
   Make sure that injectors rotate smoothly. If not, probable cause is incorrect installation of O-ring. Replace O-ring with new one.
4) Tighten delivery pipe bolts and make sure that injectors rotate smoothly.

   Tightening Torque
   (a): 23 N·m (2.3 kg-m, 17.0 lb-ft)

5) Connect couplers to injectors securely.
6) Connect battery negative cable.
7) With engine OFF and the ignition switch ON position, check for fuel leaks around fuel line connection.

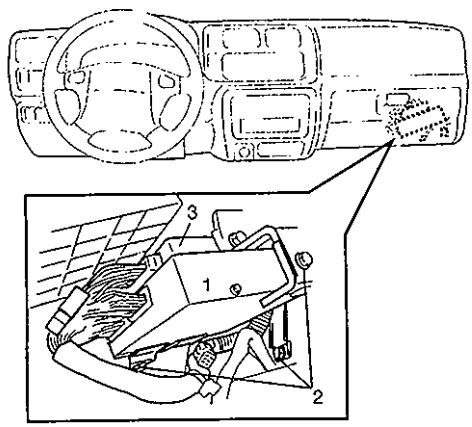

1. ECM
2. Bolt
3. A/T control module (A/T)

ELECTRONIC CONTROL SYSTEM

ENGINE CONTROL MODULE (ECM)

CAUTION:
As ECM consists of precision parts, be careful not to expose it to excessive shock.

Removal and Installation

1) Disconnect battery negative cable from battery.
2) Disable air bag system (if equipped) referring to "Disabling the Air Bag System" in Air Bag System section.
3) Remove glove box.
4) Disconnect connectors from ECM.
5) Remove ECM.

Reverse above procedure in case of installation.

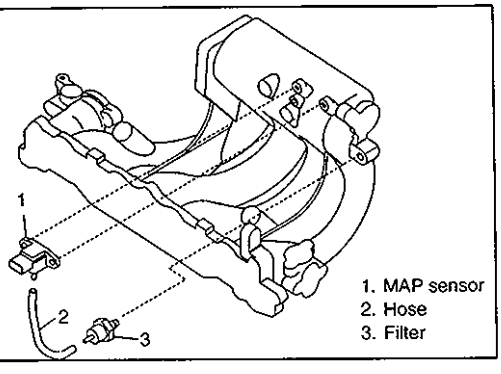

1. MAP sensor
2. Hose
3. Filter

MANIFOLD ABSOLUTE PRESSURE SENSOR (MAP SENSOR)

Removal and Installation

1) Disconnect negative cable at battery.
2) Disconnect MAP sensor coupler and hose from MAP sensor.
3) Remove MAP sensor from intake manifold.

Reverse above procedure in case of installation.

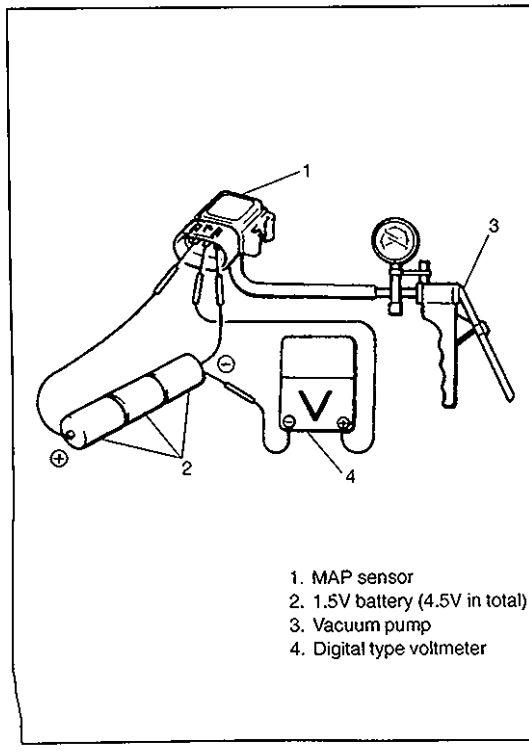

1. MAP sensor
2. 1.5V battery (4.5V in total)
3. Vacuum pump
4. Digital type voltmeter

Installation

1) Arrange 3 new 1.5V batteries in series (check that total voltage is 4.5–5.0V) and connect its positive terminal to "Vin" terminal of sensor and negative terminal to "Ground" terminal. Then check voltage between "Vout" and "Ground".
Also, check if voltage reduces when vacuum is applied up to 400mmHg by using vacuum pump.

Output voltage (Vin voltage 4.5 – 5.0V, ambient temp. 20 – 30°C, 68 – 86°F)

ALTITUDE (Reference)		BAROMETRIC PRESSURE	OUTPUT VOLTAGE
(ft)	(m)	(mmHg)	(V)
0 – 2000	0 – 610	760 – 707	3.1 – 3.6
2001 – 5000	611 – 1524	707 – 634	2.8 – 3.4
5001 – 8000	1525 – 2438	634 – 567	2.6 – 3.1
8001 – 10000	2439 – 3048	567 – 526	2.4 – 2.9

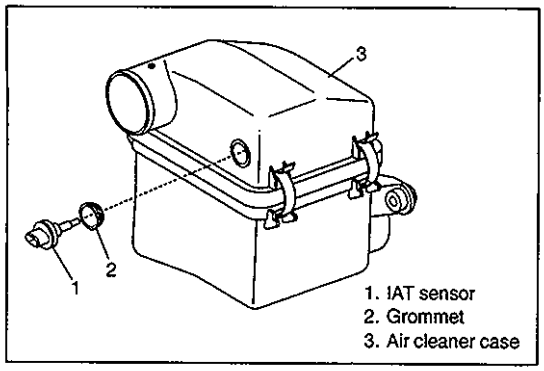

1. IAT sensor
2. Grommet
3. Air cleaner case

INTAKE AIR TEMPERATURE (IAT) SENSOR

Removal and Installation

1) Disconnect negative cable from battery.
2) Disconnect IAT sensor coupler.
3) Remove IAT sensor from air cleaner case.

Reverse above procedure in case of installation.

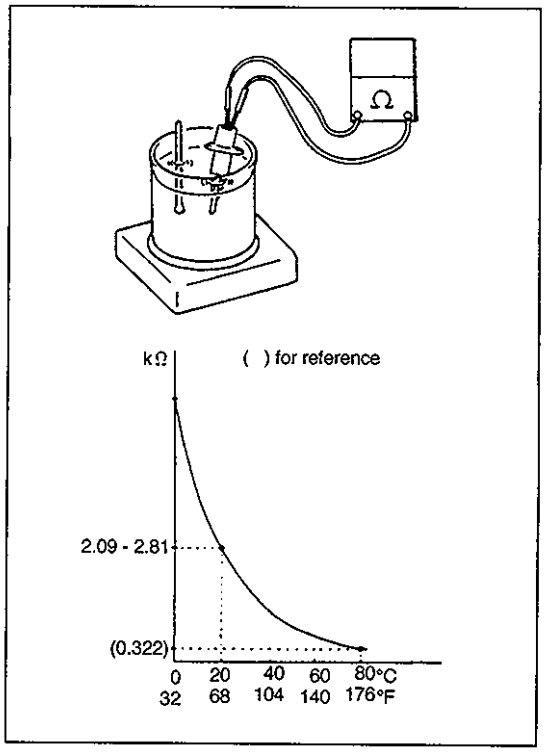

Inspection

Immerse temperature sensing part of IAT sensor in water (or ice) and measure resistance between sensor terminals while heating water gradually.
If measured resistance doesn't show such characteristic as shown in figure, replace IAT sensor.

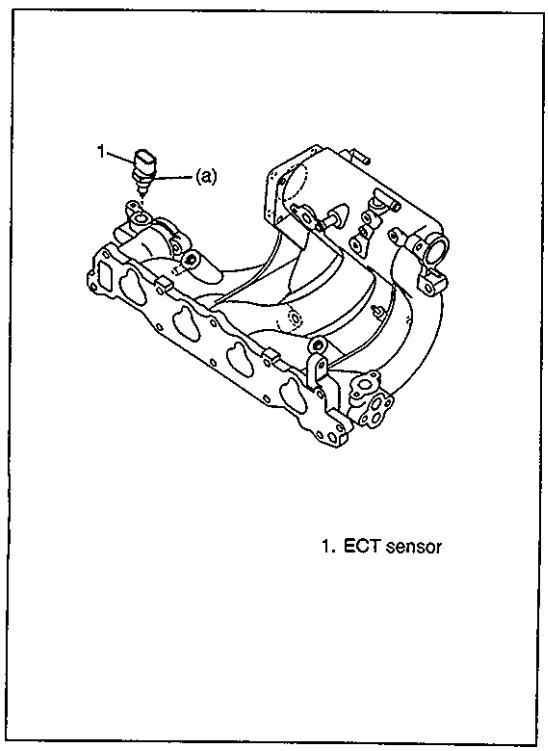

1. ECT sensor

ENGINE COOLANT TEMPERATURE SENSOR (ECT SENSOR)

Removal and Installation

1) Disconnect negative cable from battery.
2) Drain cooling system.
3) Disconnect coupler from ECT sensor.
4) Remove ECT sensor from intake manifold.

Reverse removal procedure in case of installation noting the following.

- Clean mating surfaces of sensor and intake manifold.
- Check O-ring for damage and replace if necessary.
- Tighten ECT sensor to specified torque.

Tightening Torque
(a): 15 N·m (1.5 kg-m, 11.0 lb-ft)

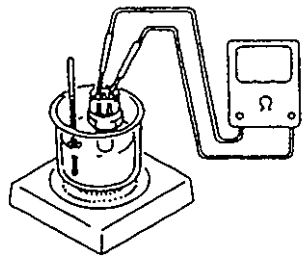

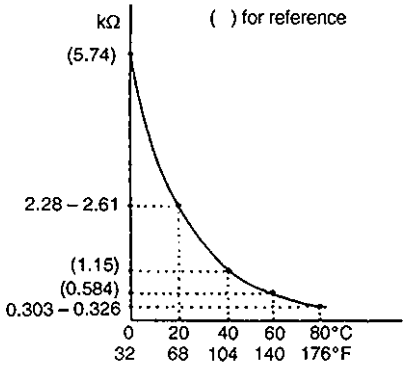

Inspection

Immerse temperature sensing part of ECT sensor in water and measure resistance between sensor terminals while heating water gradually.

If measured resistance doesn't shown such characteristic as shown, replace ECT sensor.

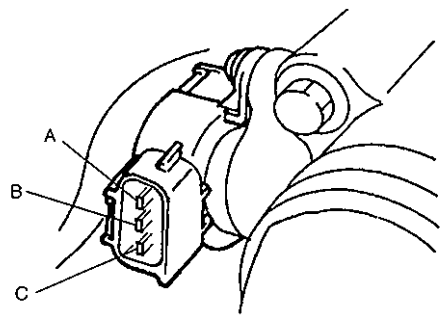

TP SENSOR

Inspection

1) Disconnect negative cable at battery and coupler from TP sensor.
2) Using ohmmeter, check resistance between terminals under each condition given in table below.

TERMINALS	RESISTANCE	
Between "A" and "B" terminals	2.5 – 6.0 kΩ	
Between "A" and "C" terminals	Throttle valve is at idle position	0.17 – 11.4 kΩ
	Throttle valve is fully opened	1.72 – 15.50 kΩ

NOTE:

There should be more than 1.5 kΩ resistance difference between when throttle valve is at idle position and when it is fully open.

If check result is not satisfactory, replace TP sensor.

3) Connect TP sensor coupler securely.
4) Connect negative cable to battery.

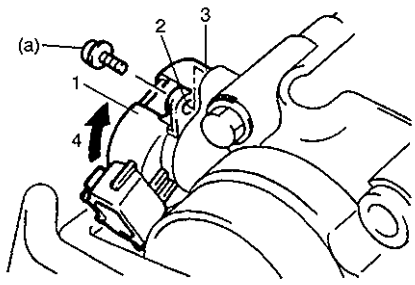

1. TP sensor
2. TP sensor hole
3. TP sensor screw hole
4. Turn TP sensor after fitting and align holes

Removal

1) Disconnect battery negative cable at battery.
2) Disconnect coupler from TP sensor.
3) Remove TP sensor from throttle body.

Installation

1) Install TP sensor to throttle body.
   Fit TP sensor to throttle body in such way that its holes are a little away from TP sensor screw holes as shown in left figure and turn TP sensor clockwise so that those holes align.

   Tightening Torque
   (a): 2 N·m (0.2 kg-m, 1.5 lb-ft)

2) Connect coupler to TP sensor securely.
3) Connect battery negative cable to battery.

HEATED OXYGEN SENSOR (HO2S) IF EQUIPPED

Oxygen Sensor Inspection

Inspect oxygen sensor and its circuit referring to flow table of diagnostic trouble code No. 13 in this section. If malfunction is found, replace.

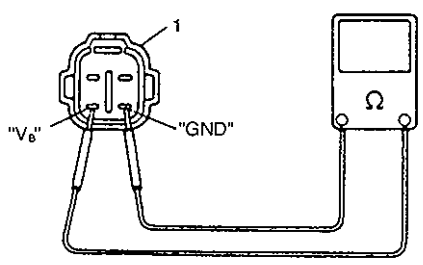

1. Sensor coupler
   (Viewed from terminal side)

Oxygen Sensor Heater Inspection

1) Disconnect oxygen sensor coupler.
2) Using ohmmeter, measure resistance between terminals "V_B" and "GND" of sensor coupler.

   NOTE:
   Temperature of sensor affects resistance value largely. Make sure that sensor heater is at correct temperature.

   Resistance of oxygen sensor heater:
   11 – 15 Ω (at 20°C, 68°F)

   If found faulty, replace oxygen sensor.
3) Connect oxygen sensor coupler securely.

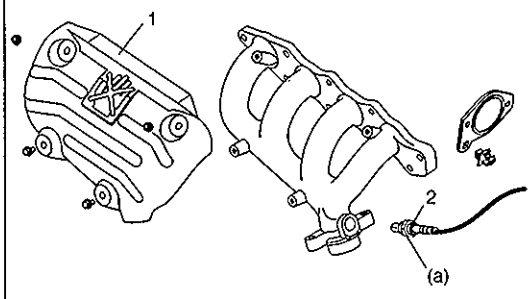

1. Exhaust manifold upper cover
2. HO2S

Removal

WARNING:
To avoid danger of being burned, do not touch exhaust system when system is hot. Oxygen sensor removal should be performed when system is cool.

1) Disconnect negative cable from battery.
2) Remove HO2S harness from bracket and disconnect coupler of oxygen sensor.
3) Remove exhaust manifold upper cover.
4) Remove oxygen sensor from exhaust manifold.

NOTE:
Be careful not to expose it to excessive shock.

Installation

Reverse removal procedure noting the following.

- Tighten oxygen sensor to specified torque.

Tightening Torque
(a): 45 N·m (4.5 kg-m, 32.5 lb-ft)

- Connect coupler of oxygen sensor and fit harness to bracket.
- After installing oxygen sensor, start engine and check that no exhaust gas leakage exists.

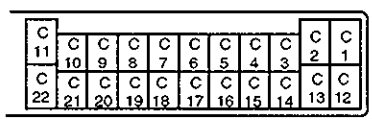

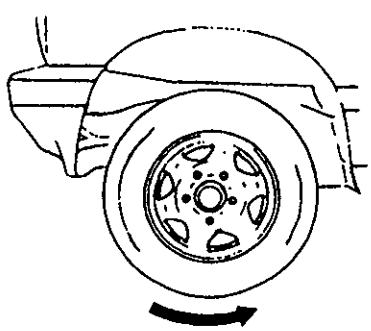

VEHICLE SPEED SENSOR (VSS)

On-Vehicle Inspection

1) Hoist vehicle.
2) Release parking brake lever, set transmission in neutral and transfer in "2H".
3) Connector voltmeter between "C2" terminal of ECM coupler and body ground.
4) Turn the ignition switch ON position and turn rear right tire slowly with rear left tire locked.
   Voltmeter should indicate deflection between 0 – 1 V and 4 – 14 V a few times while tire is turned one revolution.
   If check result is not satisfactory, proceed to flow table of diagnostic trouble code No.24 in this section.

Removal, Inspection and Installation

Refer to "VSS Removal, Inspection or Installation" in section 7D.

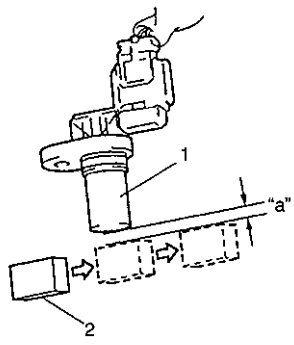

1. CMP sensor
2. Magnetic substance (iron)

CAMSHAFT POSITION SENSOR (CMP SENSOR)

On-Vehicle Inspection

1) Remove CMP sensor from sensor case.
2) Remove metal particles on end face of CMP sensor, if any.
3) Connect coupler to CMP sensor.
4) Connect voltmeter between C1 terminal of ECM coupler and ground.
5) Disconnect couplers of fuel injectors and ignition coil assemblies. And connect negative cable to battery.
6) With the ignition switch ON position, pass magnetic substance (iron).
   Voltmeter should indicate deflection between 0–1V and 4–6V.

   "a": approximately 1mm (0.03 in)

   If check result is not satisfactory, proceed to flow table of diagnostic trouble code No.42 in this section.

Removal

1) Disconnect negative cable from battery.
2) Disconnect connector from CMP sensor.
3) Remove CMP sensor from sensor case.

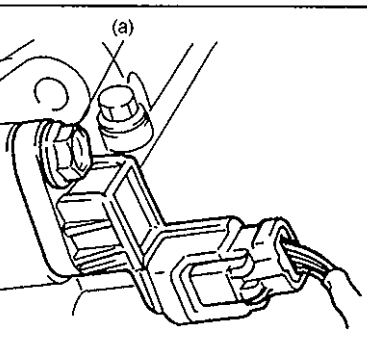

Installation

1) Check that O-ring is free from damage.
2) Check that CMP sensor and signal rotor tooth are free from any metal particles and damage.
3) Install CMP sensor to sensor case.

   Tightening Torque
   (a): 9 N·m (0.9 kg-m, 6.5 lb-ft)

4) Connect connector to it securely.
5) Connect negative cable to battery.

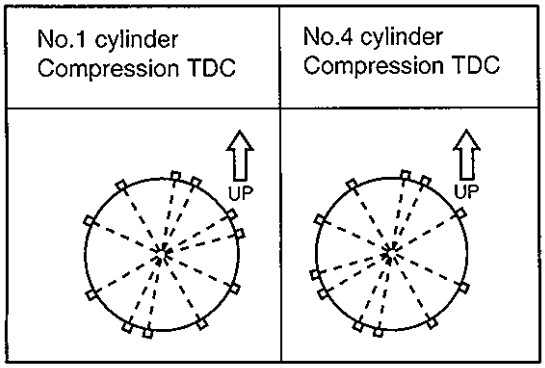

CMP SENSING ROTOR

Inspection

1) Remove CMP sensor case and cylinder head cover referring to Section 6A.
2) Turn crankshaft and align "V" mark on crankshaft pulley to "0" mark on timing belt cover.
   Then, confirm which cylinder is compression dead center and check CMP sensing rotor teeth and direction.
   If check result is not satisfied, replace camshaft.

Removal and Installation

Refer to "Rocker Arms, Rocker Shaft and Camshaft Removal and Installation" in this Section 6A.

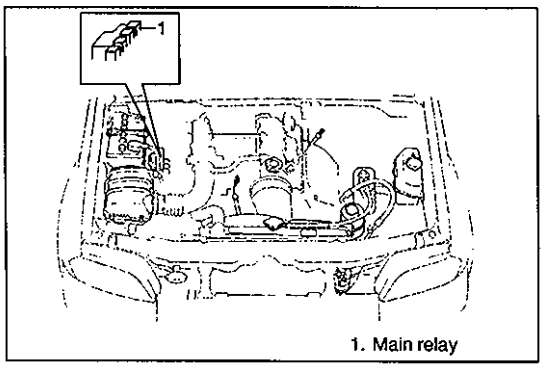

1. Main relay

MAIN RELAY

Inspection

1) Disconnect negative cable at battery.
2) Remove main relay from relay box.

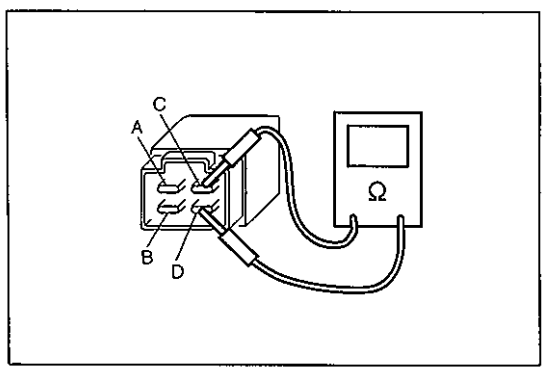

3) Check resistance between each two terminals as in table below.

TERMINALS	RESISTANCE
Between A and B	∞ (Infinity)
Between C and D	56 – 146 Ω at 20°C, 68°F

If check results are as specified, proceed to next operation check. If not, replace.

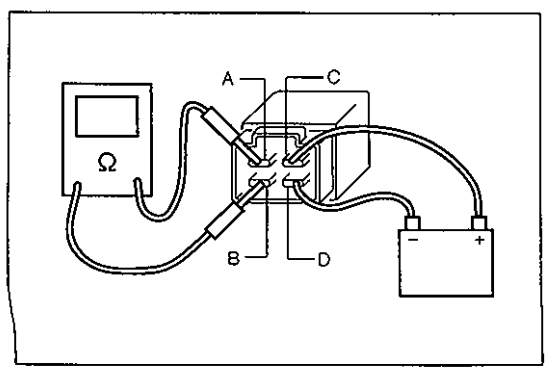

4) Check that there is continuity between terminals "A" and "B" when battery is connected to terminals "C" and "D".
   If malfunction is found, replace.

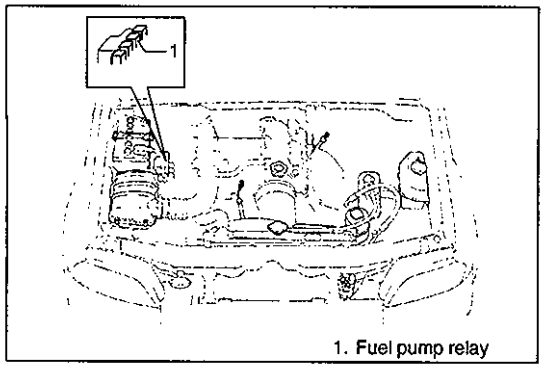

1. Fuel pump relay

FUEL PUMP RELAY

Inspection

1) Disconnect negative cable at battery.
2) Remove fuel pump relay from relay box.
3) Structure of fuel pump relay is the same as that of main relay. Check its resistance and operation using the same procedure as that for main relay.
   If malfunction is found, replace.

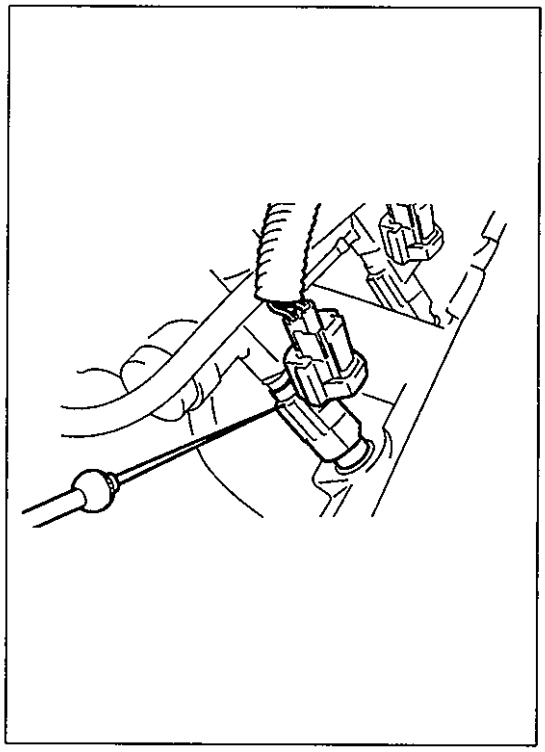

FUEL CUT OPERATION

Inspection

NOTE:
Before inspection, check to make sure that gear shift lever is in Neutral position (with A/T model, selector lever in "P" range) and that parking brake lever is pulled all the way up.

1) Warm up engine to normal operating temperature.
2) While listening to sound of injector by using sound scope or such, increase engine speed to higher than 3,000 r/min.
3) Check to make sure that sound to indicate operation of injector stops when throttle valve is closed instantly and it is heard again when engine speed is reduced to less than about 2,000 r/min.
   If not, go to "Diagnostic Flow Table B9" in this section.

A/C SIGNAL, A/C ON SIGNAL A/C CONDENSER FAN MOTOR RELAY CONTROL SYSTEM (IF A/C EQUIPPED)

Inspection

1) Check A/C signal and A/C ON signal referring to "Diagnostic Flow Table B–7" in this section.
2) Check A/C condenser fan motor relay control system referring to "Diagnostic Flow Table B–8" in this section.

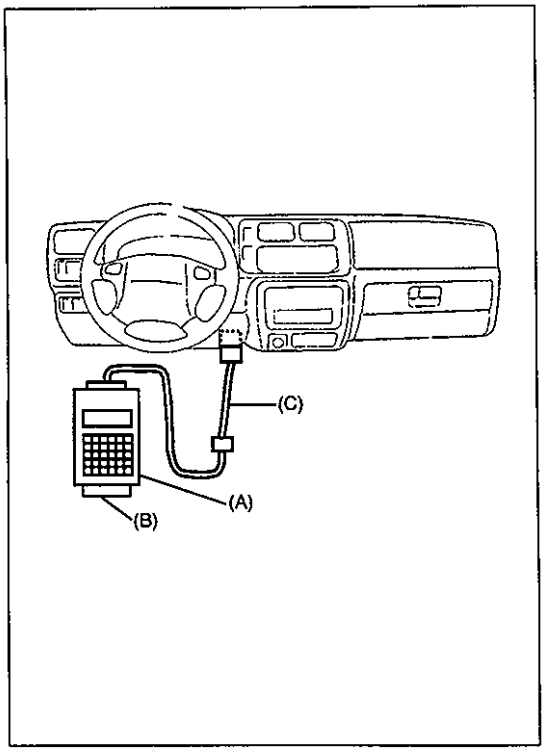

EMISSION CONTROL SYSTEM

EGR SYSTEM (IF EQUIPPED)

System Inspection [Using SUZUKI scan tool]

1) Connect Tech 1 to data link connector (DLC) with the ignition switch OFF position.

Special tool
(A): 09931-76011 (SUZUKI scan tool)
(B): Mass storage cartridge
(C): 09931-76030 (16/14 pin DLC cable)

NOTE:
For operation procedure of cartridge, refer to its cartridge operator's manual.

2) Start engine and warm up it to normal operating temperature.

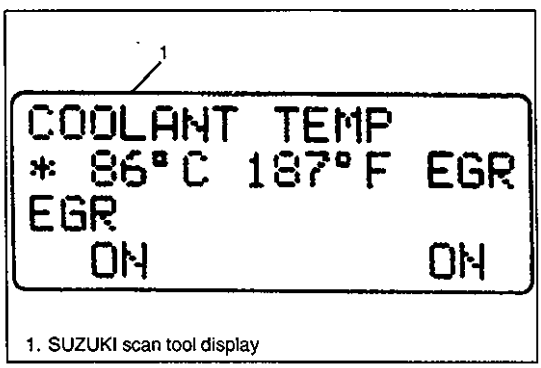

1. SUZUKI scan tool display

3) With engine speed between 1500 r/min and 4000 r/min, open EGR valve by using "MISC. TEST" mode.
In this state, according as EGR valve opening increases engine idle speed drops. If not, go to "Diagnostic Flow Table B6" in this section.

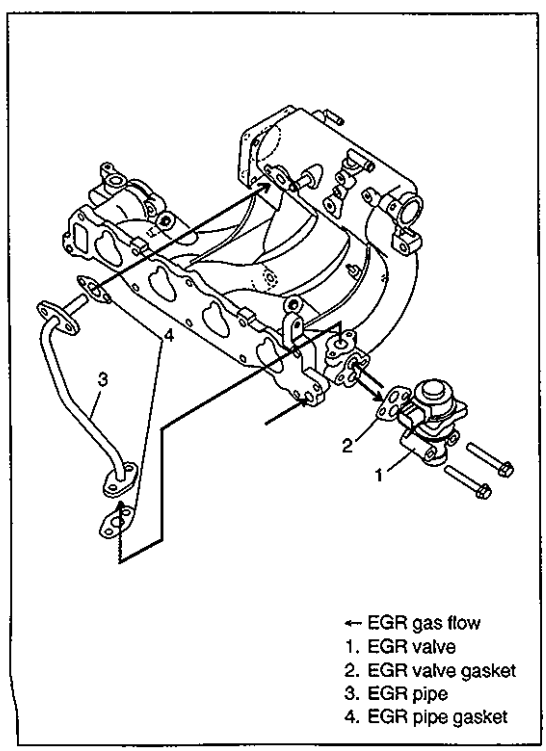

← EGR gas flow
1. EGR valve
2. EGR valve gasket
3. EGR pipe
4. EGR pipe gasket

EGR VALVE

Removal

1) Disconnect negative cable at battery.
2) Disconnect EGR valve coupler.
3) Remove EGR valve and gasket from intake manifold.
4) Remove EGR pipe.

Installation

Reverse removal procedure noting following.

- Clean mating surface of valve and intake manifold.
- Use new gasket.

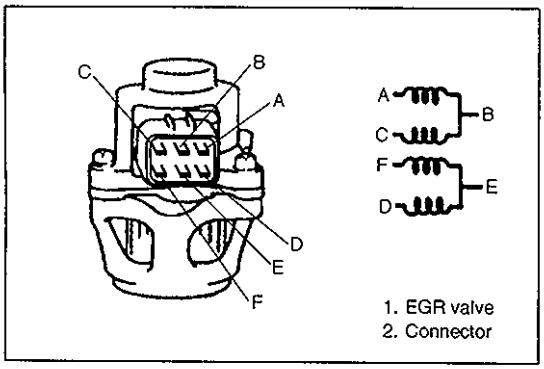

1. EGR valve
2. Connector

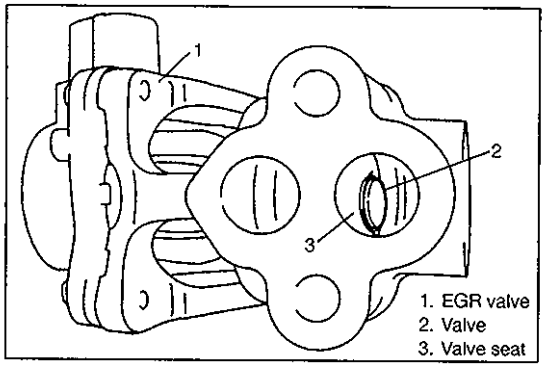

1. EGR valve
2. Valve
3. Valve seat

Inspection

1) Check resistance between following terminals of EGR valve in each pair.

Terminals	Standard resistance
A – B C – B F – E D – E	20 – 24 Ω at 20°C, 68F
B – valve body E – valve body	infinity (∞)

If found faulty, replace EGR valve assembly

2) Remove carbon from EGR valve gas passage.

NOTE:
Do not use any sharp–edged tool to remove carbon.
Be careful not to damage or bend EGR valve, valve seat and rod.

3) Inspect valve, valve seat and rod for fault, cracks, bend or other damage.
If found faulty, replace EGR valve assembly.

4) Inspect EGR passage for clogged or leak.
If found faulty, repair or replace.

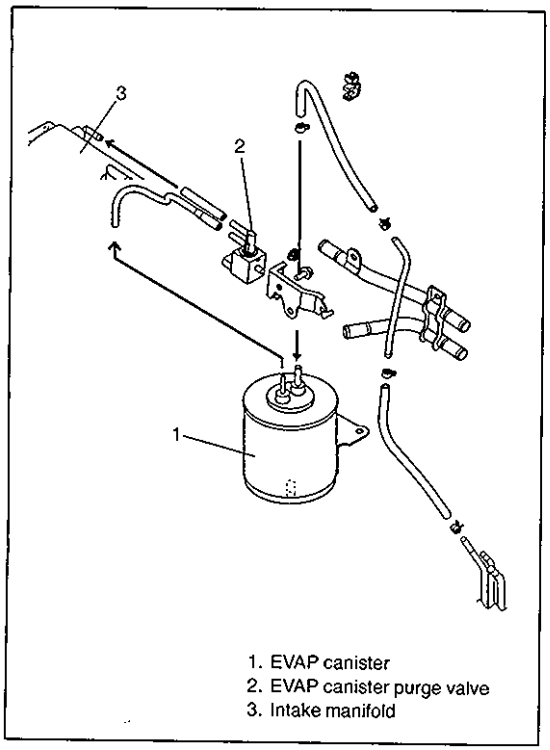

1. EVAP canister
2. EVAP canister purge valve
3. Intake manifold

EVAP EMISSION CONTROL SYSTEM (IF EQUIPPED)

EVAP Canister Purge System Inspection

NOTE:
- **Before inspection, check to make sure that gear shift lever is in neutral position (with A/T model, selector lever in "P" range) and that parking brake lever is pulled all the way up.**
- **A/C is out of service.**

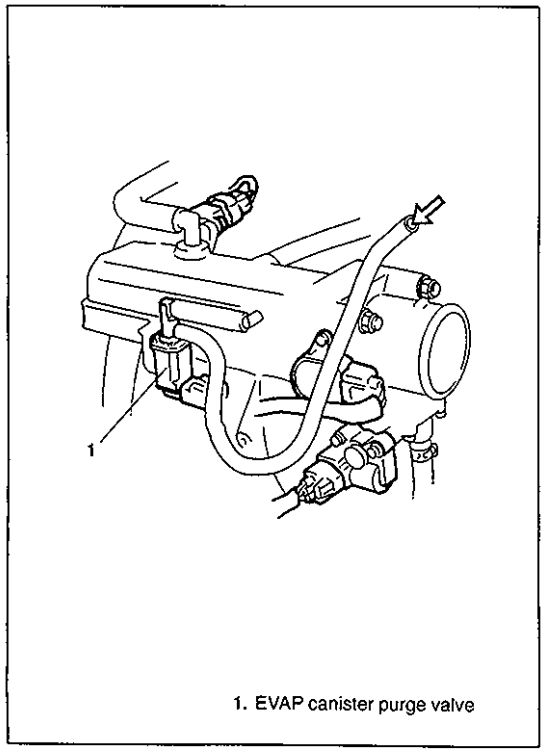

1. EVAP canister purge valve

1) Warn up engine to normal operating temperature.
2) Disconnect purge hose from EVAP canister.
3) Place finger against the end of disconnected hose and check that vacuum is not felt there when engine is running at idle speed.
4) Also check that vacuum is felt when A25 terminal of ECM coupler shorted to ground.
   If check result is not satisfactory, go to "Diagnostic Flow Table B-5" in this section.

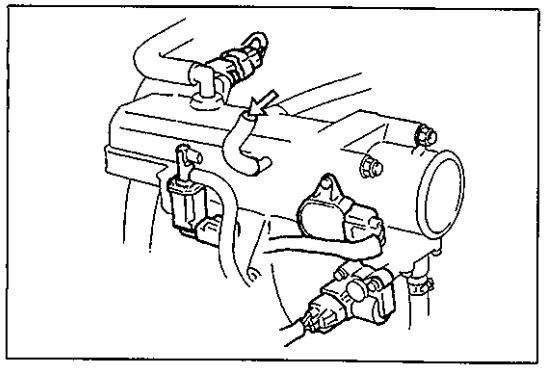

Vacuum Passage Inspection (For vehicle with EVAP canister purge valve)

Start engine and run it at idle speed. Disconnect vacuum hose from EVAP canister purge valve. With finger placed against hose disconnected,check that vacuum is applied.
If it is not applied, clean vacuum passage.

Vacuum Hose Inspection

Check hoses for connection, leakage, clog and deterioration.
Replace as necessary.

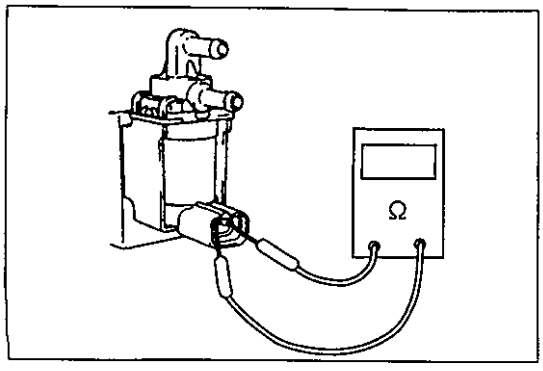

Evap Canister Purge Valve Inspection

1) With the ignition switch OFF position, disconnect coupler from EVAP canister purge valve.
2) Check resistance between two terminals of EVAP canister purge valve.
   Resistance of EVAP canister purge valve:
   30 – 34 Ω at 20°C (68°F)
   If resistance is as specified, proceed to next operation check.
   If not, replace.

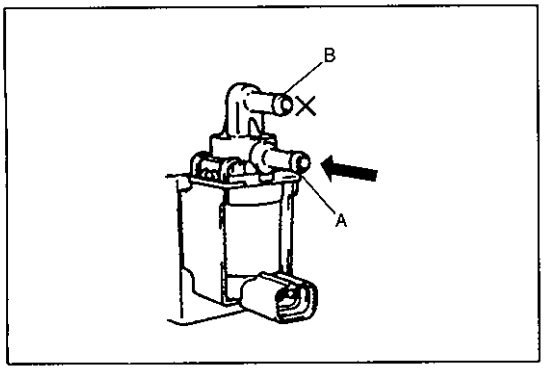

3) Disconnect vacuum hoses from intake manifold and its pipe.
4) With coupler disconnected, blow into pipe "A". Air should not come out of pipe "B".

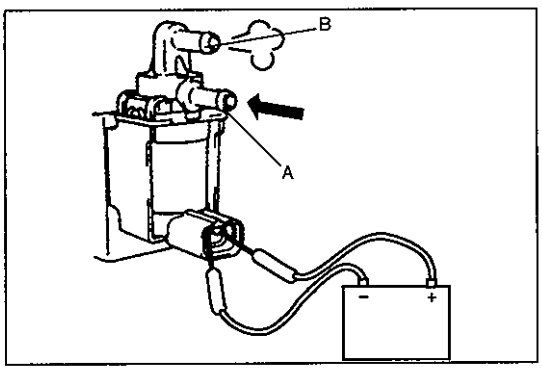

5) Connect 12V-battery to EVAP canister purge valve terminals. In this state, blow pipe "A".
Air should come out of pipe "B".

WARNING:
Do not suck the air through valve. Fuel vapor inside valve is harmful.

If check result is not as described, replace canister purge valve.

6) Connect vacuum hoses.
7) Connect EVAP canister purge valve coupler securely.

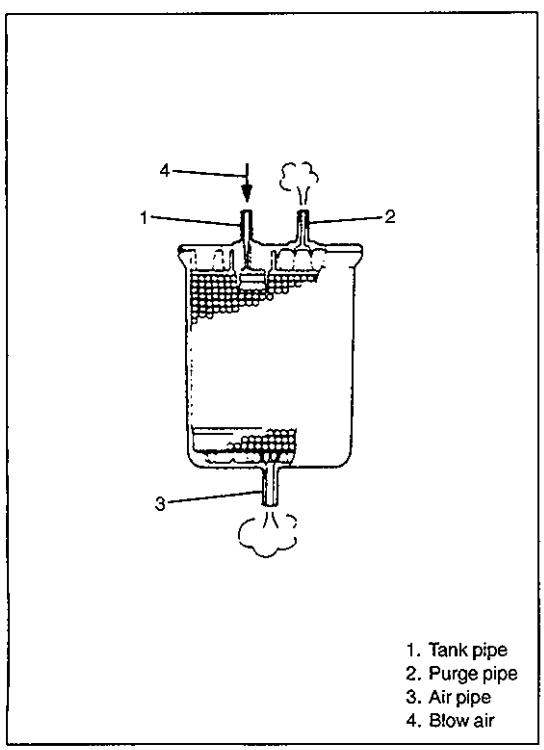

1. Tank pipe
2. Purge pipe
3. Air pipe
4. Blow air

EVAP Canister Inspection

WARNING:
DO NOT SUCK nozzles on EVAP canister. Fuel vapor inside EVAP canister is harmful.

1) Disconnect vacuum hoses from EVAP canister and remove EVAP canister.
2) When air is blown into tank pipe, there should be no restriction of flow through purge pipe and air pipe.
If operation differs from above description, EVAP canister must be replaced.
3) Install EVAP canister and connect hoses to canister.

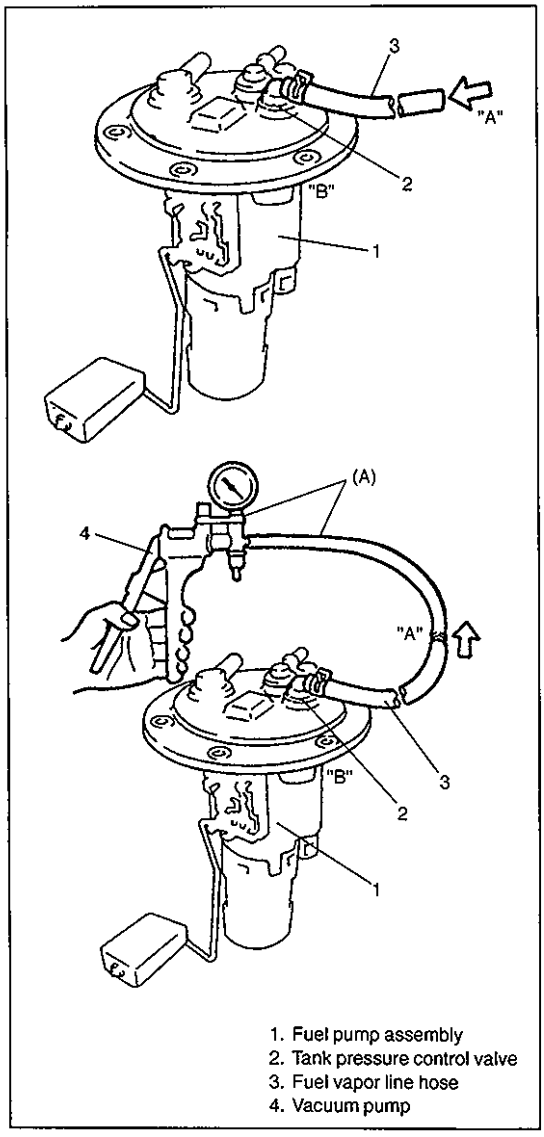

1. Fuel pump assembly
2. Tank pressure control valve
3. Fuel vapor line hose
4. Vacuum pump

Tank pressure Control Valve

Inspection

1) Remove fuel pump assembly installed on fuel tank, referring to SECTION 6C.
2) Air should pass through valve smoothly from fuel vapor line hose "A" to "B" when blown hard.
3) Also, when vacuum pump is connected to fuel vapor hose and load is applied gradually, air should pass from "B" to "A".

Special Tool
(A): 09917-47910

4) If air doesn't pass through valve in step 2) or hard blow is required in step 3), replace bracket sub assembly, referring to SECTION 6C.

> **WARNING:**
> **DO NOT SUCK air through fuel vapor line hose. Fuel vapor inside valve is harmful.**

5) Install fuel pump assembly to fuel tank, referring to SECTION 6C.

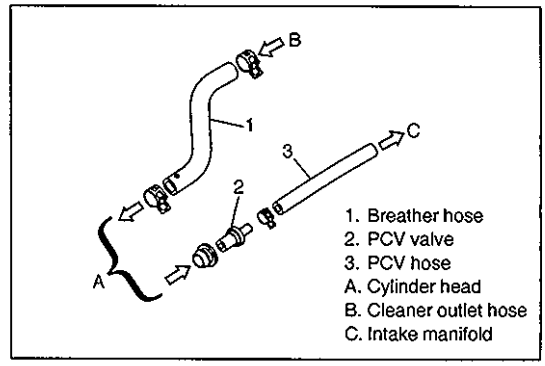

1. Breather hose
2. PCV valve
3. PCV hose
A. Cylinder head
B. Cleaner outlet hose
C. Intake manifold

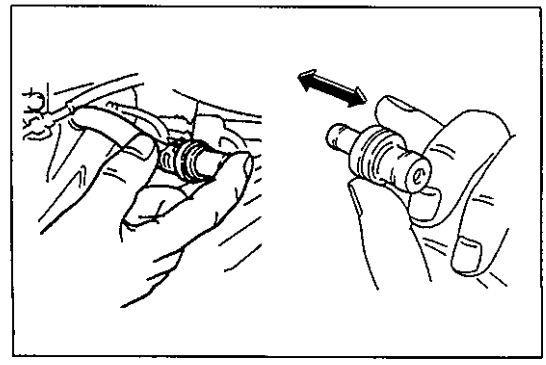

PCV SYSTEM

Inspection

NOTE:
Be sure to check that there is no obstruction in PCV valve or its hoses before checking engine idle speed/IAC duty for obstructed PCV valve or hose hampers its accurate checking.

1) Check hoses for connection, leakage, clog, and deterioration. Replace as necessary.
2) Disconnect PCV valve from cylinder head cover and plug head cover hole.
3) Run engine at idle.
4) Place your finger over end of PCV valve to check for vacuum. If there is no vacuum, check for clogged valve and hose. Replace as necessary.
5) After checking vacuum, stop engine and remove PCV valve. Shake valve and listen for the rattle of check needle inside the valve. If valve does not rattle, replace valve.
6) After checking, connect PCV valve, PCV hose and clamp securely.

TIGHTENING TORQUE SPECIFICATIONS

Fastening parts	Tightening torque		
	N·m	kg-m	lb-ft
Delivery pipe plug bolt	30	3.0	22.0
Delivery pipe bolts	23	2.3	17.0
Camshaft position sensor bolt	9	0.9	6.5
Heated oxygen sensor	45	4.5	32.5
Fuel pressure regulator bolts	10	1.0	7.5
Engine coolant temp. (ECT) sensor	15	1.5	11.0

SPECIAL TOOLS

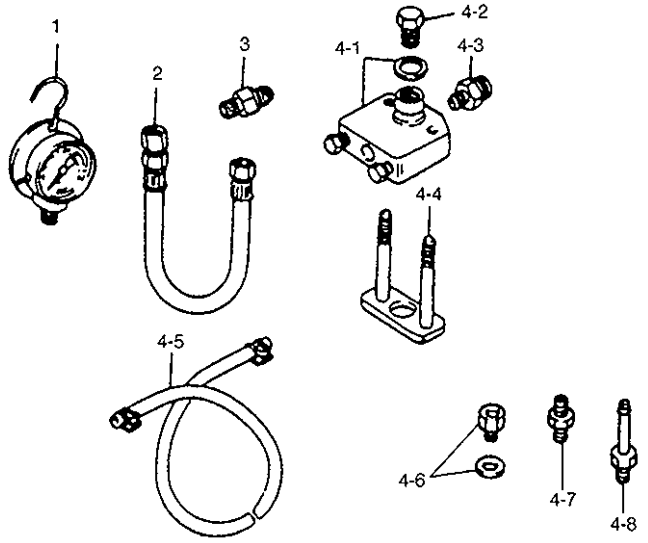

1. Pressure gauge
   09912-58441
2. Pressure hose
   09912-58431
3. Attachment
   09919-46010
4. Checking tool set
   09912-58421

4-1. Tool body & washer
4-2. Body plug
4-3. Body attachment
4-4. Holder
4-5. Return hose & clamp
4-6. Body attachment-2 & washer
4-7. Hose attachment-1
4-8. Hose attachment-2

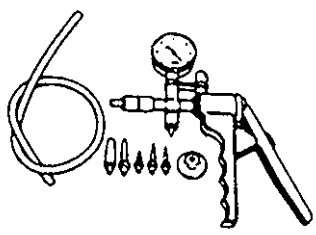

09917-47910
Vacuum pump gauge

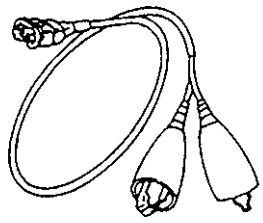

09930-88530
Injector test lead

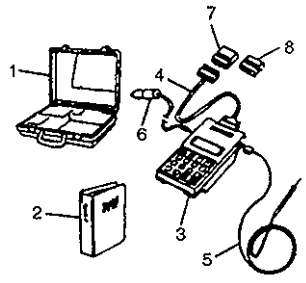

1. Storage case
2. Operator's manual
3. Tech 1A
4. DLC cable
5. Test lead/probe
6. Power source cable
7. DLC cable adaptor
8. Self–test adaptor

09931-76011
Tech 1A kit

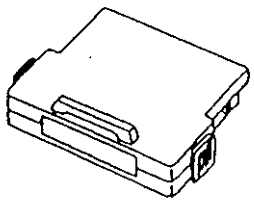

Mass storage cartridge

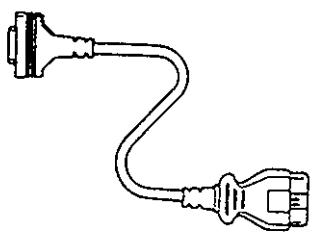

09931-76030
16/14 pin DLC cable

SECTION 6F

IGNITION SYSTEM

WARNING:
For vehicles equipped with Supplemental Restraint (Air Bag) System

- **Service on and around the air bag system components or wiring must be performed only by an authorized SUZUKI dealer. Refer to "Air Bag System Components and Wiring Location View" under "General Description" in air bag system section in order to confirm whether you are performing service on or near the air bag system components or wiring. Please observe all WARNINGS and "Service Precautions" under "On-Vehicle Service" in air bag system section before performing service on or around the air bag system components or wiring. Failure to follow WARNINGS could result in unintentional activation of the system or could render the system inoperative. Either of these two conditions may result in severe injury.**
- **Technical service work must be started at least 90 seconds after the ignition switch is turned to the "LOCK" position and the negative cable is disconnected from the battery. Otherwise, the system may be activated by reserve energy in the Sensing and Diagnostic Module (SDM).**

CONTENTS

6F

GENERAL DESCRIPTION 6F- 2
System wiring 6F- 2
Components 6F- 3
DIAGNOSIS 6F- 3
Diagnostic flow table 6F- 4
Ignition spark check 6F- 5
Ignition timing check and adjustment 6F- 6
ON-VEHICLE SERVICE 6F- 8
High-tension cord and ignition coil assembly (igniter and ignition coil) 6F- 8
Spark plug 6F- 9
Ignition resistor 6F- 9
CMP sensor 6F-10
Noise suppressor 6F-10
TIGHTENING TORQUE SPECIFICATION 6F-11
SPECIAL TOOLS 6F-11

GENERAL DESCRIPTION

The ignition system is a distributorless ignition system. It consists of the parts as described below and has an electronic ignition system.

- ECM
  It detects the engine condition through the signals from the sensors, determines the most suitable ignition timing and time for electricity to flow to the primary coil and sends a signal to the igniter (in ignition coil assembly).
- Ignition coil assembly (including an igniter and an ignition coil)
  The ignition coil assembly has a built-in igniter and ignition coil which turns ON and OFF the primary current of the ignition coil according to the signal from ECM. When the ignition coil primary current is turned OFF, a high voltage is induced in the secondary wiring.
- Ignition resistor
  ECM uses this resistor to correct initial ignition timing. Therefore, fine adjustment of initial ignition timing is possible by replacing it.
- Spark plug, high-tension cord and noise suppressor
- CMP sensor, TP sensor, ECT sensor and MAP sensor
  For their details, refer to SECTION 6E.

Although this distributorless ignition system does not have a distributor, it has two ignition coil assemblies (one is for No.1 and No.4 spark plugs and the other is for No.2 and No.3 spark plugs). When an ignition signal is sent from ECM to the igniter in the ignition coil assembly for No.1 and No.4 spark plugs, a high voltage is induced in the secondary coil. Then, it is fed to No.1 spark plug through high-tension cords and to No.4 spark plug directly from ignition coil assembly to cause both of these plugs to spark simultaneously. Likewise, when an ignition signal is sent from ECM to the ignition coil assembly for No.2 and No.3 spark plugs, a high voltage is induced in the secondary coil. Then, it is fed to No.3 spark plug through high-tension cords and to No.2 spark plug directly from ignition coil assembly to cause both No.2 and No.3 spark plugs to spark simultaneously.

SYSTEM WIRING

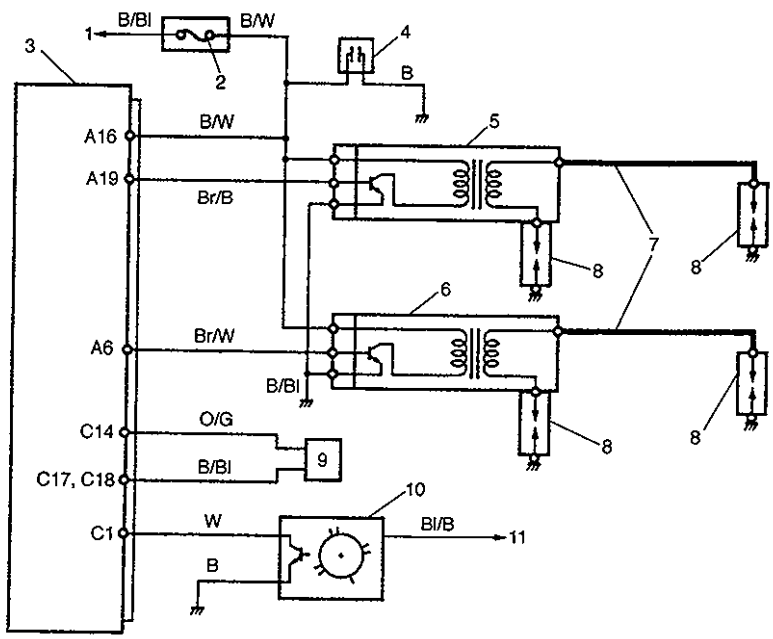

1. To ignition switch
2. "IG COIL METER" fuse
3. ECM
4. Noise suppressor
5. Ignition coil assembly (igniter and ignition coil) for No.1 and No.4 cylinders
6. Ignition coil assembly (igniter and ignition coil) for No.2 and No.3 cylinders
7. High-tension cord
8. Spark plug
9. Ignition resistor
10. CMP sensor
11. To main relay

COMPONENTS

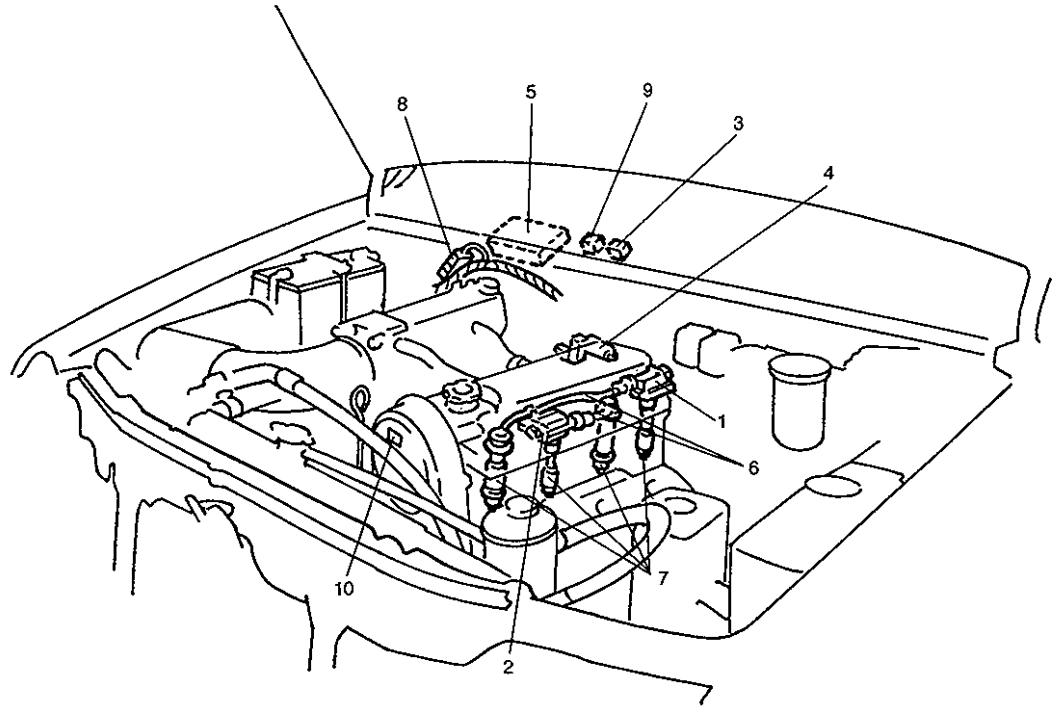

1. Ignition coil assembly for No.1 and No.4 cylinders
2. Ignition coil assembly for No.2 and No.3 cylinders
3. Monitor coupler (*)
4. CMP sensor
5. ECM (*)
6. High-tension cord
7. Spark plug
8. Noise suppressor
9. Ignition resistor (*)
10. Ignition Label

NOTE:
Above figure shows left hand steering vehicle. For right hand steering vehicle, parts with (*) are installed at the other side.

DIAGNOSIS

Condition	Possible Cause	Correction
Engine cranks, but will not start or hard to start	**No spark**	
	• Blown fuse for ignition coil	Replace.
	• Loose connection or disconnection of lead wire or high-tension cord(s)	Connect securely.
	• Faulty high-tension cord(s)	Replace.
	• Faulty spark plug(s)	Adjust, clean or replace.
	• Faulty ignition coil assembly(s)	Replace.
	• Faulty CMP sensor	Clean, tighten or replace.
	• Faulty ECM	Replace.
Poor fuel economy or engine performance	• Incorrect ignition timing	Adjust.
	• Faulty high-tension cord(s)	Replace.
	• Faulty spark plug(s)	Adjust, clean or replace.
	• Faulty ignition coil assembly(s)	Replace.
	• Faulty CMP sensor	Clean, tighten or replace.
	• Faulty ECM	Replace.

DIAGNOSTIC FLOW TABLE

STEP	ACTION	YES	NO
1	Was "Engine Diagnostic Flow Table" in SECTION 6 performed?	Go to Step 2.	Go to "Engine Diagnostic Flow Table" in SECTION 6.
2	Ignition Spark Test 1) Check all spark plug for condition and type, referring to "Spark Plug" in this section. 2) If OK, perform ignition spark test, referring to "Ignition Spark Check" in this section. Is spark emitted from all spark plugs?	Go to Step 11 on the next page.	Go to Step 3.
3	Diagnostic Trouble Code (DTC) Check 1) Check DTC stored in ECM, referring to "Diagnostic Trouble Code (DTC) Check" in SECTION 6E. Is DTC stored?	Go to applicable flow table corresponding to that code No. in SECTION 6E.	Go to Step 4.
4	Electrical Connection Check 1) Check ignition coil assemblies for electrical connection. Are they connected securely?	Go to Step 5.	Connect securely.
5	High-tension Cord Check 1) Check high-tension cord for resistance, referring to "High-tension Cord and Ignition Coil Assembly (Igniter and Ignition Coil)" in this section. Is check result satisfactory?	Go to Step 6.	Replace high-tension cord(s).
6	Ignition Coil Assembly Power Supply And Ground Circuit Check 1) Check ignition coil assembly power supply ("B/Bl" wire) circuit for open and short. Are circuits in good condition?	Go to Step 7.	Repair or replace.
7	Ignition Coil Assembly Check 1) Check ignition coil assembly for resistance, referring to "High-tension Cord and Ignition Coil Assembly (Igniter and Ignition Coil)" in this section. Is check result satisfactory?	Go to Step 8.	Replace ignition coil assembly(s).
8	A known-good Ignition Coil Assembly Substitution 1) Substitute a known-good ignition coil assembly and then repeat STEP 2. Is check result of STEP 2 satisfactory?	Replace ignition coil assembly.	Go to Step 9.
9	CMP Sensor Check 1) Check CMP sensor and signal rotor, referring to STEP 5 and 6 of "Diagnostic Flow Table Code 42" in SECTION 6E. Is check result satisfactory?	Go to Step 10 on the next page.	Tighten CMP sensor bolt, replace CMP sensor.

STEP	ACTION	YES	NO
10	Ignition Trigger Signal Circuit Check 1) Check ignition trigger signal ("Br/W" and "Br/B" wire) circuit for open, short and poor connection. Are circuits in good condition?	Go to Step 11.	Repair or replace.
11	Ignition Timing Check 1) Check initial ignition timing and ignition timing advance, referring to "Ignition Timing Check And Adjustment" in this section. Is check result satisfactory?	Substitute a known-good ECM and then repeat STEP 2.	Go to Step 12.
12	Ignition Timing Adjustment And Recheck 1) Adjustment initial ignition timing and ignition timing advance, referring to "Ignition Timing Check And Adjustment" in this section. 2) Recheck initial ignition timing and ignition timing advance, referring to "Ignition Timing Check And Adjustment" in this section. Is check result satisfactory?	System is in good condition.	Repair or replace. Check CMP sensor, input signals related to ignition system and exhaust camshaft installation.

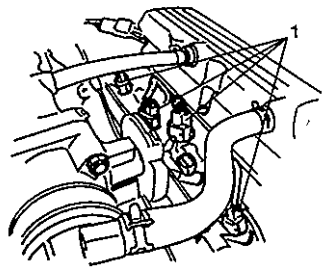

1. Injector coupler

IGNITION SPARK CHECK

1) Disconnect injector coupler.

WARNING:
Without disconnection of injector coupler, combustible gas may come out from spark plug holes during this test and may get ignited in engine room.

2) Remove spark plug and check it for condition and type, referring to "Spark Plug" under "On-Vehicle Service" later in this section.
3) If OK, connect ignition coil coupler to ignition coil assembly and connect spark plug to ignition coil assembly or high-tension cord. Ground spark plug.
4) Crank engine and check if each spark plug sparks.
   If no spark is emitted, inspect the related parts as described under "Diagnosis" earlier in this section.
5) After checking, install spark plug and ignition coil, referring to "Spark Plug" and "High-tension Cord and Ignition Coil Assembly (Igniter and Ignition Coil)" under "On-Vehicle Service" later in this section.
6) Connect injector coupler.

IGNITION TIMING CHECK AND ADJUSTMENT

NOTE:
Before starting engine, place transmission gear shift lever in "Neutral" (shift selector lever to "P" range for A/T model), and set parking brake.

1) Start engine and warm it up to normal operating temperature.
2) Make sure that all of electrical loads except ignition are switched off.

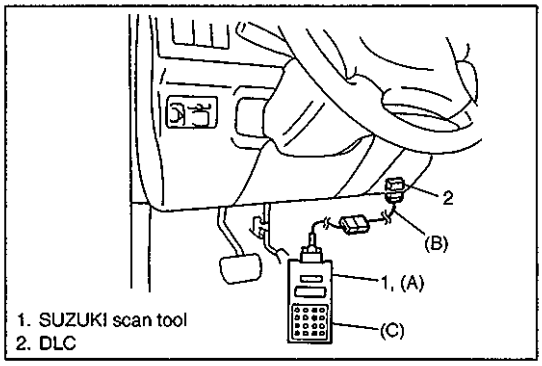

1. SUZUKI scan tool
2. DLC

3) Check to be sure that idle speed is within specification. (Refer to SECTION 6E.)
4) [Using SUZUKI scan tool]
Connect SUZUKI scan tool to DLC with ignition switch OFF, restart engine and fix ignition timing by using fixed spark mode of SUZUKI scan tool.

Special Tool
(A): 09931-76011 (SUZUKI scan tool)
(B): 09931-76030 (16/14 pin DLC cable)
(C): Mass storage cartridge

[Not using SUZUKI scan tool]
i) Remove monitor coupler cap.
ii) Ground test switch terminal in monitor coupler by using service wire so that ignition timing is fixed on initial one.

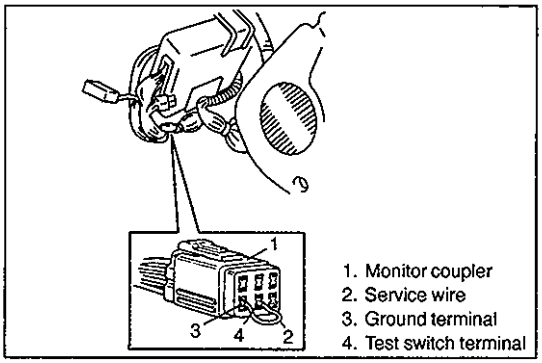

1. Monitor coupler
2. Service wire
3. Ground terminal
4. Test switch terminal

5) Set timing light to high-tension cord for No.1 cylinder.
6) Using timing light, check that timing is within specification.

Initial ignition timing of viewpoint
(test switch terminal grounded): 5 ± 1° BTDC
Ignition order: 1-3-4-2

Special Tool
(A): 09930-76420

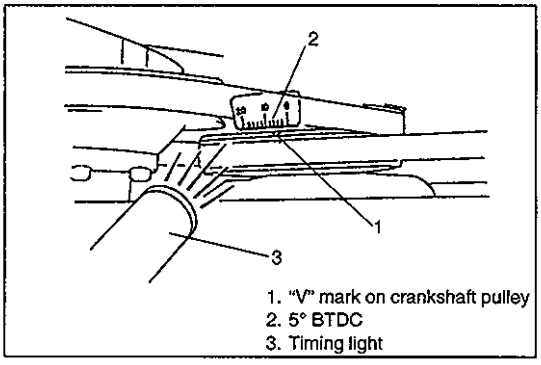

1. "V" mark on crankshaft pulley
2. 5° BTDC
3. Timing light

7) If ignition timing is out of specification, check resistance of ignition resistor, referring to "Ignition Resistor" under "On-Vehicle Service" later in this section.

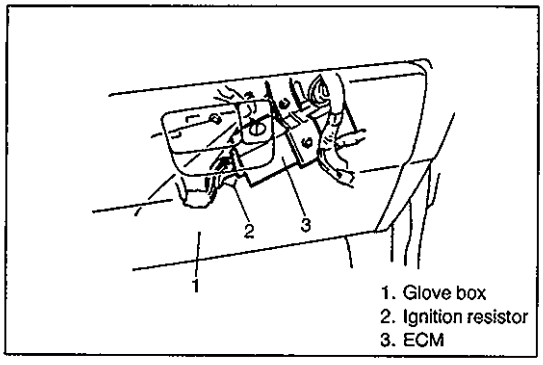

1. Glove box
2. Ignition resistor
3. ECM

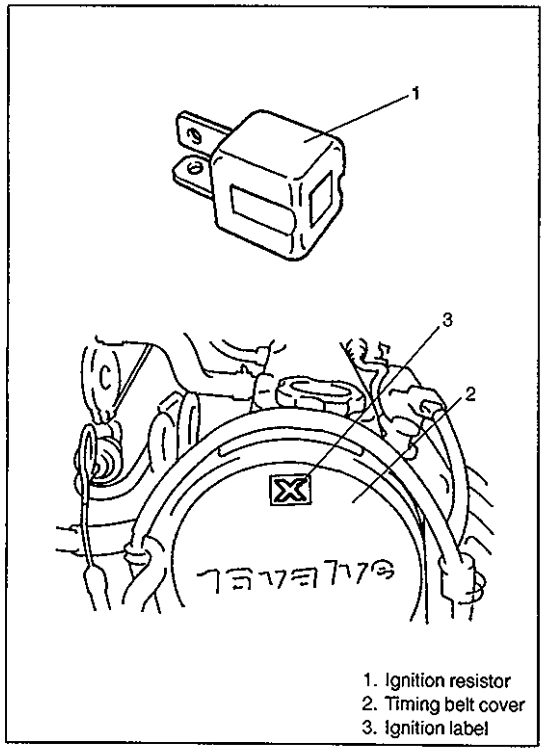

1. Ignition resistor
2. Timing belt cover
3. Ignition label

8) If check result is not satisfactory, change ignition resistor and recheck that initial ignition timing is within specification.
For example, if the vehicle being serviced has an ignition resistor with an "X" mark, initial ignition timing can be changed by replacing it with the following ignition resistor.

Characters printed on the ignition resistor	1	2	3	4
Difference in advance degrees as compared with those of "X" (before replacement)	–5°	–4°	–3°	–2°

5	X	6	7	8	9	10	11
–1°	0°	1°	2°	3°	4°	5°	6°

NOTE:
If ignition resistor has been replaced, be sure to also replace ignition label attached to timing belt cover with the one that has the same symbol as that marked on ignition resistor.

9) [Using SUZUKI scan tool]
After checking and/or adjusting, end fixed spark mode of SUZUKI scan tool.
[Not using SUZUKI scan tool]
After checking and/or adjusting, disconnect service wire from monitor coupler.

CAUTION:
Driving with test switch terminal grounded will cause damage to catalyst. Be sure to disconnect service wire after adjustment.

NOTE:
In this state, ignition timing may vary more or less of initial ignition timing but it is nothing abnormal.

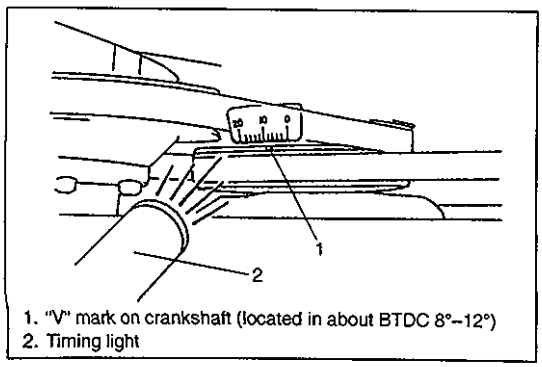

1. "V" mark on crankshaft (located in about BTDC 8°–12°)
2. Timing light

10) With engine idling (closed throttle position and vehicle stopped), check that ignition timing is about BTDC 8°–12° (shown in the figure). Also, check that increasing engine speed advances ignition timing. If above check results are not satisfactory, check TP sensor, test switch terminal circuit and ECM.

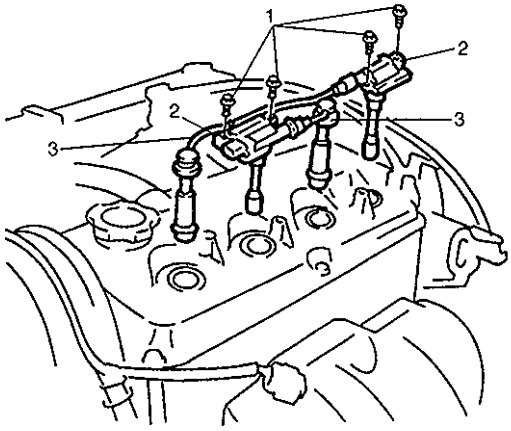

1. Ignition coil bolt
2. Ignition coil assembly
3. High-tension cord

ON-VEHICLE SERVICE

HIGH-TENSION CORD AND IGNITION COIL ASSEMBLY (IGNITER AND IGNITION COIL)

REMOVAL

1) Disconnect ignition coil coupler.
2) Disconnect high-tension cord from ignition coil assembly while gripping its cap.
3) Pull out high-tension cord from spark plug while gripping its cap.

CAUTION:
- **Removal of high-tension cords together with clamps will be recommended so as not to damage their inside wire (resistive conductor).**
- **For the same reason, pull out each connection by gripping cap portion.**

4) Remove ignition coil bolt, and then pull out ignition coil assembly.

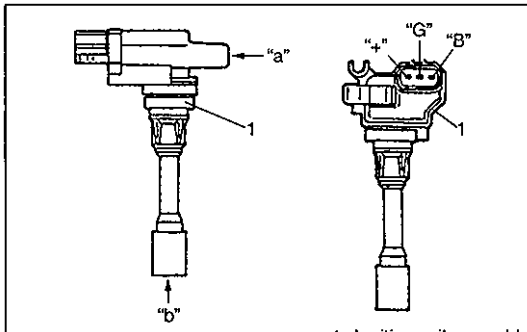

1. Ignition coil assembly

INSPECTION

- Check resistance between terminals as follows by using analog type ohmmeter.

  "a" – "b" : 7.5 – 14 kΩ (at 20°C, 68°F)
  "B" – "G" : Neither 0 Ω or ∞ (infinity)
  "+" – "B" : Not 0 Ω
  "+" – "G" : Not 0 Ω

  If check result is not satisfactory, replace ignition coil assembly.

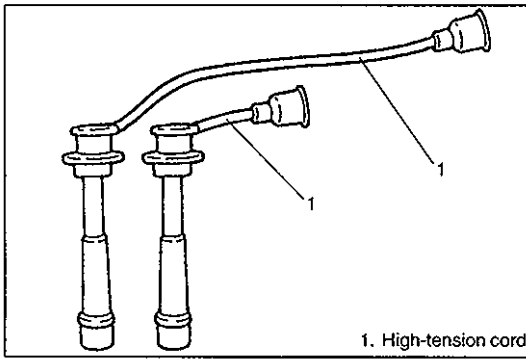

1. High-tension cord

- Measure resistance of high-tension cord by using ohmmeter.

  High-tension cord resistance: 4 – 10 kΩ/m (1.2 – 3.0 kΩ/ft)

  If resistance exceeds specification, replace high-tension cord(s).

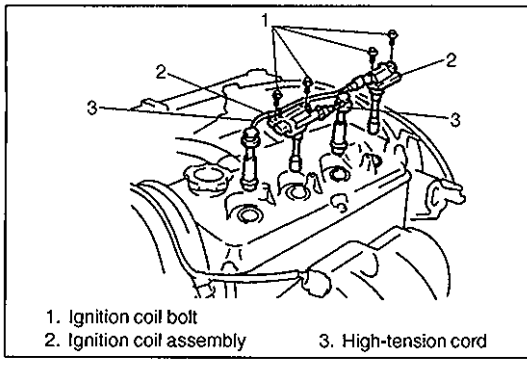

1. Ignition coil bolt
2. Ignition coil assembly
3. High-tension cord

INSTALLATION

Reverse removal procedure for installation.

CAUTION:
- **Never attempt to use metal conductor high-tension cord(s) as replacing parts.**
- **Insert each cap potion fully when installing high-tension cords.**

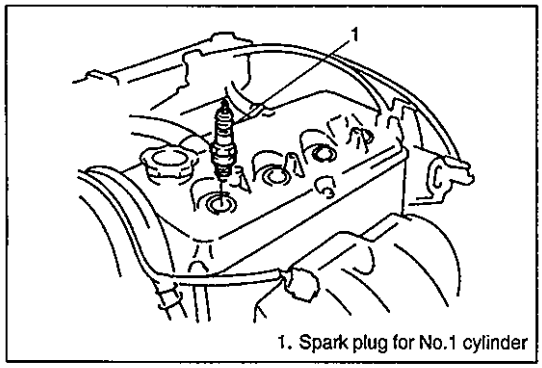

1. Spark plug for No.1 cylinder

SPARK PLUG

REMOVAL

1) Pull out high-tension cord while gripping its cap.
2) Remove ignition coil assembly, referring to "High-tension Cord and Ignition Coil Assembly (Igniter and Ignition Coil)" under "On-Vehicle Service" earlier in this section.
3) Remove spark plug.

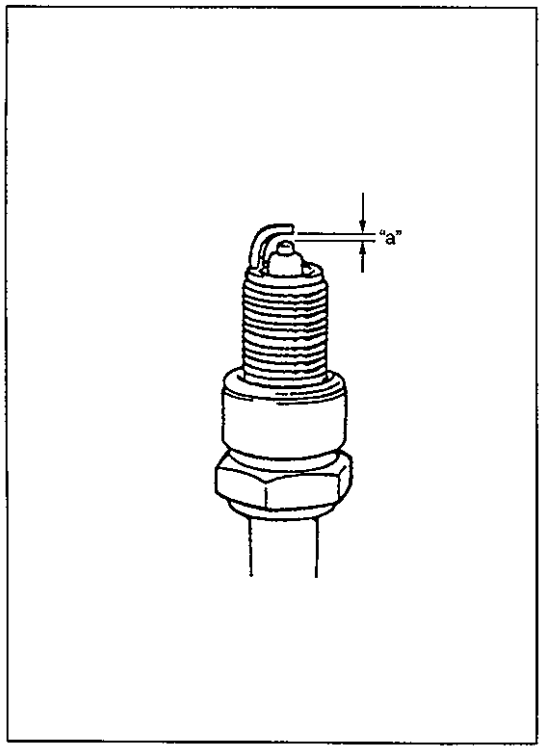

INSPECTION

Inspect them for:

- Electrode wear
- Carbon deposits
- Insulator damage

If any abnormality is found, adjust air gap, clean with spark plug cleaner or replace them with specified new plug.

Spark plug air gap "a": 0.7 – 0.8 mm (0.028 – 0.031 in.)
Spark plug type: NGK BKR6E
DENSO K20PR-U

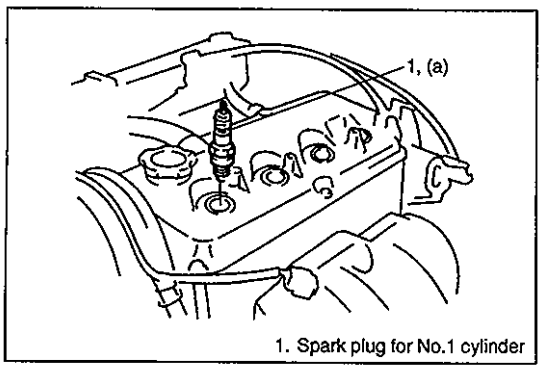

1. Spark plug for No.1 cylinder

INSTALLATION

1) Install spark plug and tighten them to specified torque.

   Tightening Torque
   (a): 25 N·m (2.5 kg-m, 18.0 lb-ft)

2) Install ignition coil assembly, referring to "High-tension Cord and Ignition Coil Assembly (Igniter and Ignition Coil)" under "On-Vehicle Service" earlier in this section.
3) Install high-tension cord while gripping its cap.

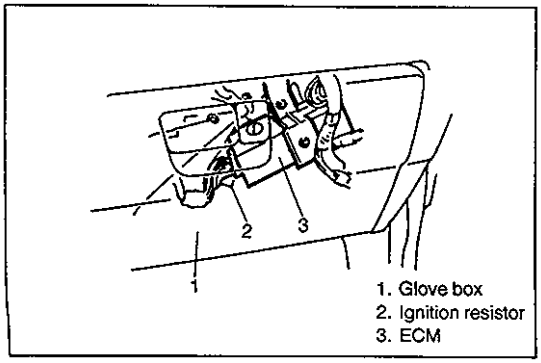

1. Glove box
2. Ignition resistor
3. ECM

IGNITION RESISTOR

REMOVAL

1) With ignition switch OFF, remove ECM, referring to "ECM" under "On-Vehicle Service" in SECTION 6E.
2) Remove ignition resistor.

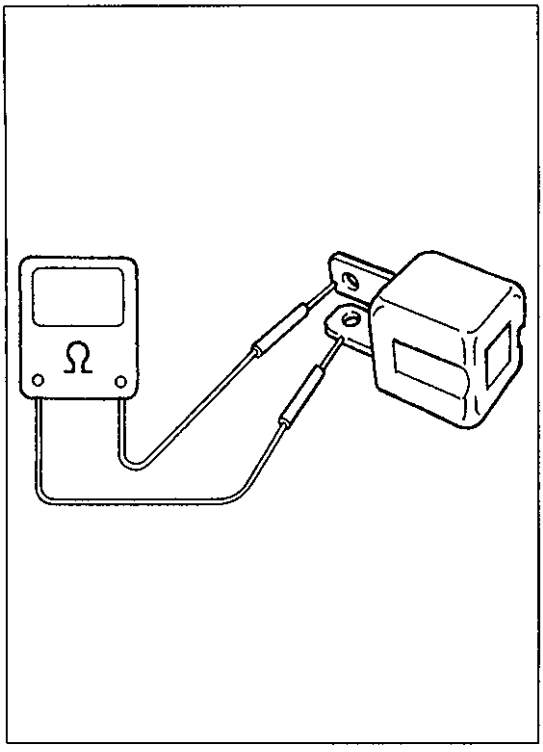

INSPECTION
Measure resistance of ignition resistor by using ohmmeter.

NOTE:
Depending on number marked on ignition resistor, resistor value varies as follows.

1:	0 Ω	6:	980 – 1020 Ω
2:	80 – 84 Ω	7:	1.35 – 1.53 kΩ
3:	157 – 163 Ω	8:	2.16 – 2.24 kΩ
4:	265 – 274 Ω	9:	3.53 – 3.67 kΩ
5:	421 – 439 Ω	10:	6.08 – 6.32 kΩ
X:	666 – 694 Ω	11:	11.8 – 12.2 kΩ

If check result is not satisfactory, replace ignition resistor.

INSTALLATION
For installation, reverse removal procedure.

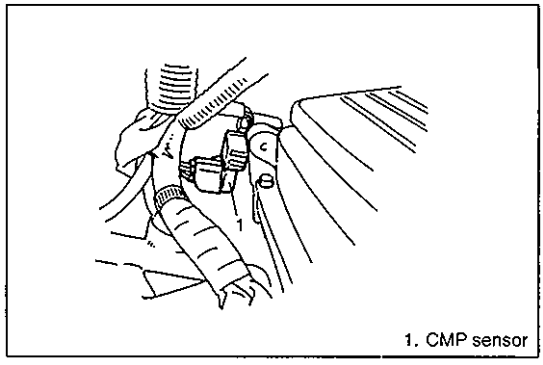

1. CMP sensor

CMP SENSOR
Refer to "CMP Sensor" under "On-Vehicle Service" in SECTION 6E for removal, inspection and installation.

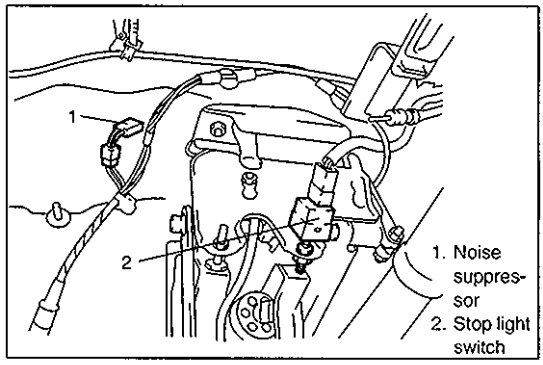

1. Noise suppressor
2. Stop light switch

NOISE SUPPRESSOR
REMOVAL
1) Disconnect coupler of noise suppressor.
2) Remove noise suppressor.

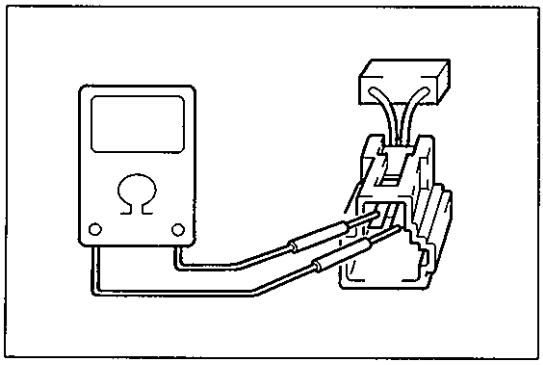

INSPECTION
Using ohmmeter, check to be sure that capasitor (condenser) in noise suppressor is not conductive.
If check result is not satisfactory, replace noise suppressor.

INSTALLATION
For installation, reverse removal procedure.

TIGHTENING TORQUE SPECIFICATION

Fastening portion	Tightening torque		
	N·m	kg-m	lb-ft
Spark plug	25	2.5	18.0

SPECIAL TOOLS

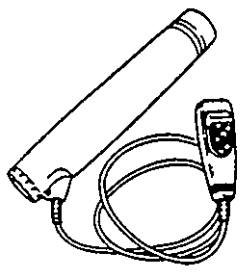

09930-76420
Timing light (Dry cell type)

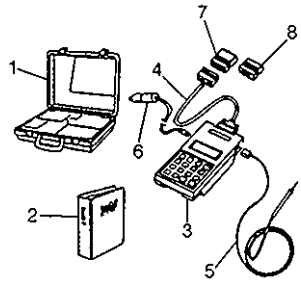

1. Storage case
2. Operator's manual
3. Tech 1A
4. DLC cable
5. Test lead/probe
6. Power source cable
7. DLC cable adaptor
8. Self-test adaptor

09931-76011
Tech 1A kit

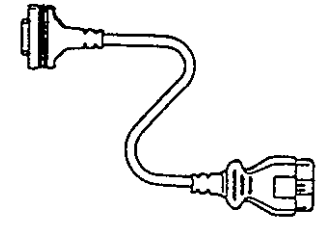

09931-76030
16/14 pin DLC cable

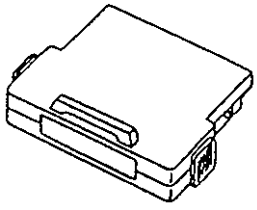

Mass storage cartridge

SECTION 6G

CRANKING SYSTEM
(0.9 kW No-Reduction Type)

CONTENTS

GENERAL DESCRIPTION 6G-2
- Cranking Circuit 6G-2
- Starting Motor 6G-2

DIAGNOSIS 6G-4

UNIT REPAIR OVERHAUL 6G-6
- Dismounting 6G-6
- Remounting 6G-6
- Disassembly 6G-7
- Reassembly 6G-8
- Inspection 6G- 8
- Performance Test 6G-12
  - Pull-in test 6G-12
  - Hold-in test 6G-12
  - Check pinion return 6G-12
  - No-load performance test 6G-12

SPECIFICATIONS 6G-13

REQUIRED SERVICE MATERIAL 6G-13

SPECIAL TOOL 6G-13

GENERAL DESCRIPTION

CRANKING CIRCUIT

The cranking circuit consists of the battery, starting motor, ignition switch, and related electrical wiring. These components are connected electrically as shown below.
Only the starting motor will be covered in this section.

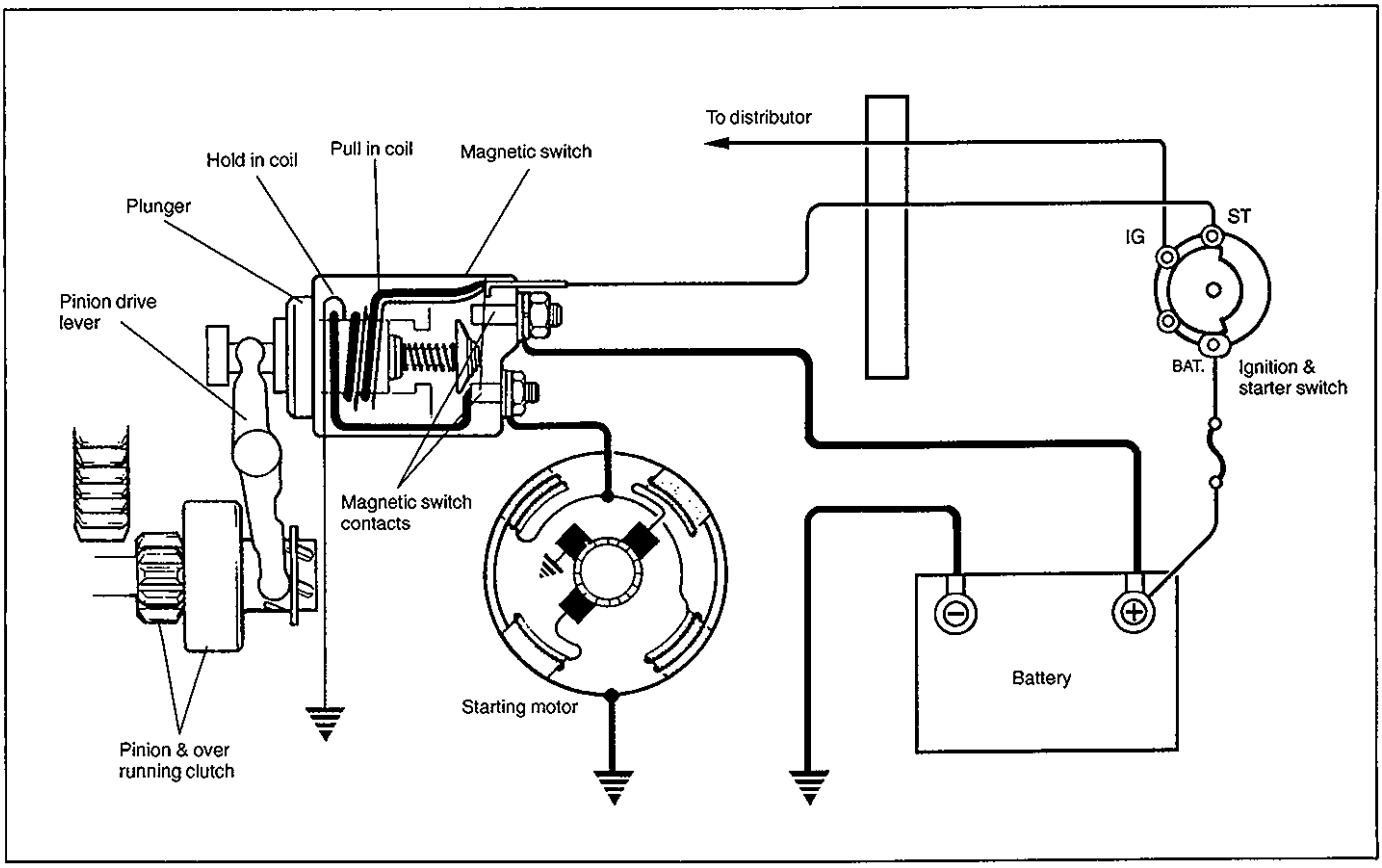

STARTING MOTOR

The starting motor consist of parts shown following page and has field coils mounted in starting motor yoke (frame). The magnetic switch assembly and parts in the starting motor are enclosed in the housings so that they will be protected against possible dirt and water splash.
In the circuit shown above, the magnetic (motor) switch coils are magnetized when the ignition switch is closed. The resulting plunger and pinion drive lever movement causes the pinion to engage the engine flywheel gear and the magnetic switch main contacts to close, and cranking takes place. When the engine starts, the pinion overrunning clutch protects the armature from excessive speed until the switch is opened, at which time the return spring causes the pinion to disengage.

NOTE:
- **Starting motor does not require lubrication except during overhaul.**
- **Make sure to apply grease before assembly where so indicated "A" in the figure below.**

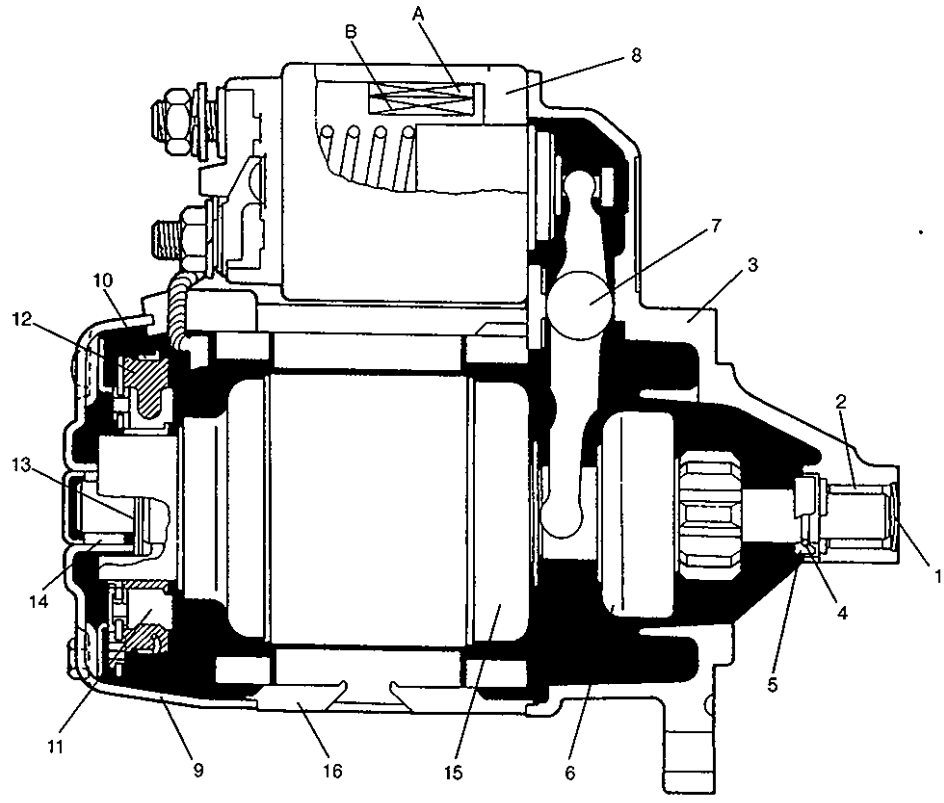

1. Drive housing cover
2. Drive bush
3. Drive housing
4. Armature ring
5. Armature stop ring
6. Over running clutch
7. Pinion drive lever
8. Magnetic switch
9. Commutator end cover
10. Brush spring
11. Brush holder
12. Brush
13. Washer
14. Commutator end bushing
15. Armature
16. Starting motor yoke

A: Hold-in coil
B: Pull-in coil

"A" : Apply grease (99000-25010)

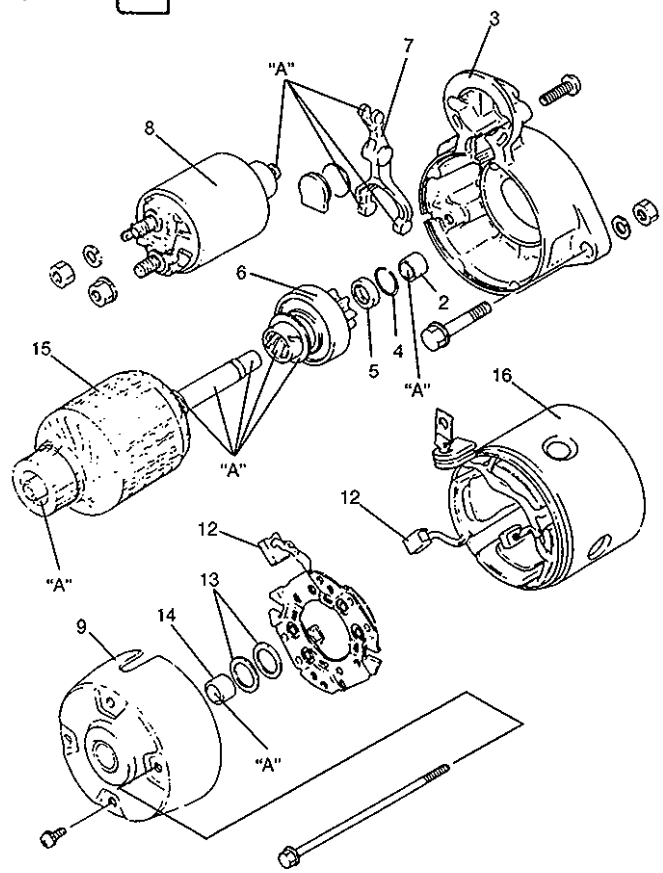

DIAGNOSIS

Possible symptoms due to starting system trouble would be as follows:
- Starting motor does not run (or runs slowly)
- Starting motor runs but fails to crank engine
- Abnormal noise is heard

Proper diagnosis must be made to determine exactly where the cause of each trouble lies ..... in battery, wiring harness, (including ignition and starter switch), starting motor or engine.

Do not remove motor just because starting motor does not run. Check following items and narrow down scope of possible causes.
1) Condition of trouble
2) Tightness of battery terminals (including ground cable connection on engine side) and starting motor terminals
3) Discharge of battery
4) Mounting of starting motor

Condition	Possible Cause	Correction
Motor not running	**No operating sound of magnetic switch**	
	• Battery run down	Recharge battery.
	• Battery voltage too low due to battery deterioration	Replace battery.
	• Poor contact in battery terminal connection	Retighten or replace.
	• Loose grounding cable connection	Retighten.
	• Fuse set loose or blown off	Tighten or replace.
	• Poor contacting action of ignition switch and magnetic switch	Replace.
	• Lead wire coupler loose in place	Retighten.
	• Open-circuit between ignition switch and magnetic switch	Repair.
	• Open-circuit in pull-in coil	Replace magnetic switch.
	• Poor sliding of plunger and/or pinion	Repair.
	• Shift lever switch is not in P or N, or not adjusted (A/T)	Shift in P or N, or adjust switch.
	• Brushes are seating poorly or worn down	Repair or replace.
	Operating sound of magnetic switch heard	
	• Battery run down	Recharge battery.
	• Battery voltage too low due to battery deterioration	Replace battery.
	• Loose battery cable connections	Retighten.
	• Burnt main contact point, or poor contacting action of magnetic switch	Replace magnetic switch.
	• Brushes are seating poorly or worn down	Repair or replace.
	• Weakened brush spring	Replace.
	• Burnt commutator	Replace armature.
	• Poor grounding of field coil	Repair.
	• Layer short-circuit of armature	Replace.
	• Crankshaft rotation obstructed	Repair.

Condition	Possible Cause	Correction
Starting motor running but too slow (small torque)	**If battery and wiring are satisfactory, inspect starting motor**	
	• Insufficient contact of magnetic switch main contacts	Replace magnetic switch.
	• Layer short-circuit of armature	Replace.
	• Disconnected, burnt or worn commutator	Repair or replace.
	• Poor grounding of field coil	Repair.
	• Worn brushes	Replace brush.
	• Weakened brush springs	Replace spring.
	• Burnt or abnormally worn end bush	Replace bush.
Starting motor running, but not cranking engine	• Worn pinion tip	Replace over-running clutch.
	• Poor sliding of over-running clutch	Repair.
	• Over-running clutch slipping	Replace over-running clutch.
	• Worn teeth of ring gear	Replace flywheel (M/T) or drive plate (A/T).
Noise	• Abnormally worn bush	Replace bush.
	• Worn pinion or worn teeth of ring gear	Replace over-running clutch or flywheel (M/T), drive plate (A/T).
	• Poor sliding of pinion (failure in return movement)	Repair or replace.
	• Lack of grease in each part	Lubricate.
Starting motor does not stop running	• Fused contact points of magnetic switch	Replace magnetic switch.
	• Short-circuit between turns of magnetic switch coil (layer short-circuit)	Replace magnetic switch.
	• Failure of returning action in ignition switch	Replace.

UNIT REPAIR OVERHAUL

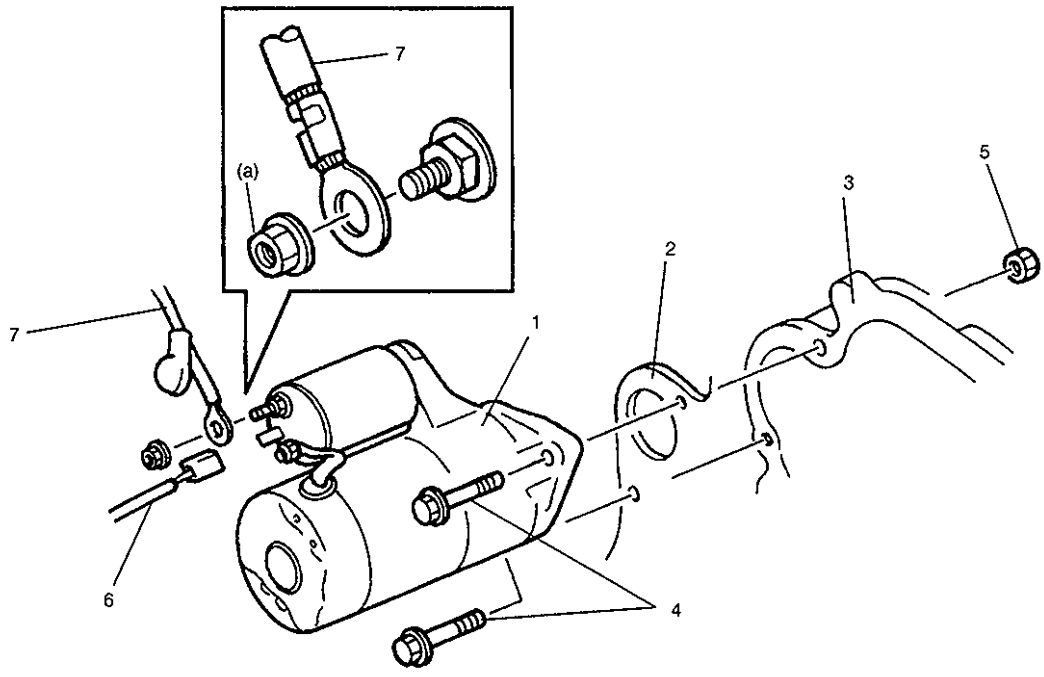

1. Starting motor
2. Clutch housing upper plate
3. Transmission case
4. Starting motor mounting bolt
5. Starting motor mounting nut
6. Magnetic switch lead wire
7. Battery cable

DISMOUNTING

1) Disconnect negative battery lead at battery.
2) Disconnect magnetic switch lead wire and battery cable from starting motor.
3) Remove starting motor mounting bolts and nut.
4) Remove starting motor.

REMOUNTING

Reverse the dismounting procedure.

Tightening Torque
(a): 11 N·m (1.1 kg-m, 8.0 lb-ft)

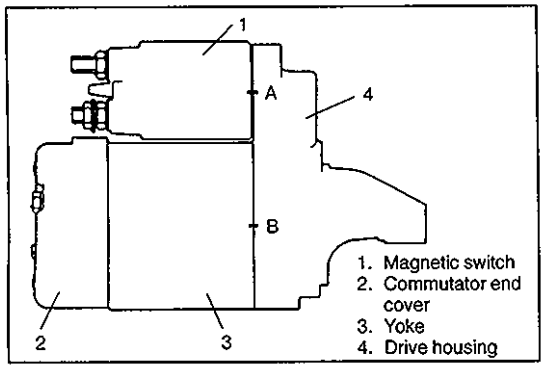

DISASSEMBLY

NOTE:

- **Before disassembling starting motor, be sure to put match marks at two locations (A and B) as shown in the left figure so that any possible mistakes can be avoided.**
- **Do not clamp yoke in a vise or strike it with a hammer during disassembling and reassembling.**

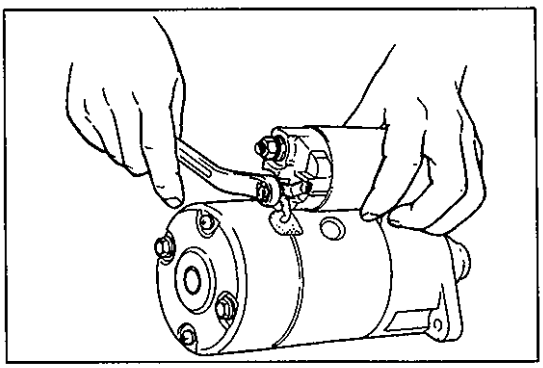

1) Remove nut securing the end of field coil lead to terminal on the head of magnetic switch.

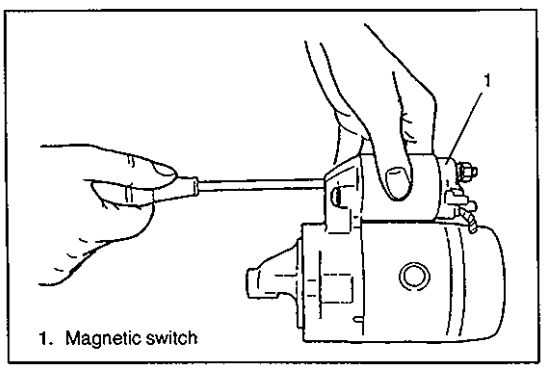

2) Take off magnetic switch from starting motor body by removing 2 mounting screws.

NOTE:
Don't disassemble this switch. If defective, replace as a complete assembly.

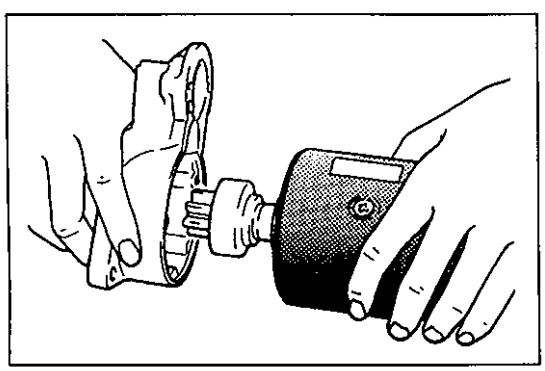

3) Loosen 2 bolts and 2 screws to remove commutator end cover.
4) Separate drive housing and armature from yoke.

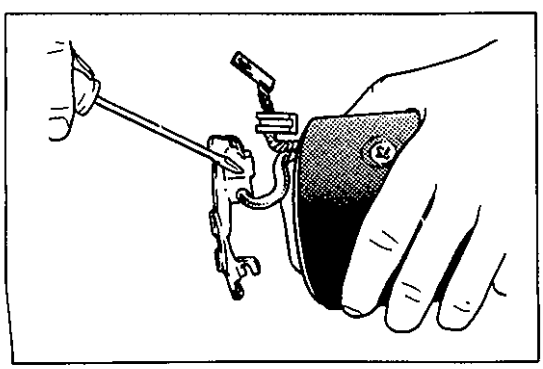

5) Draw brushes out of holder.

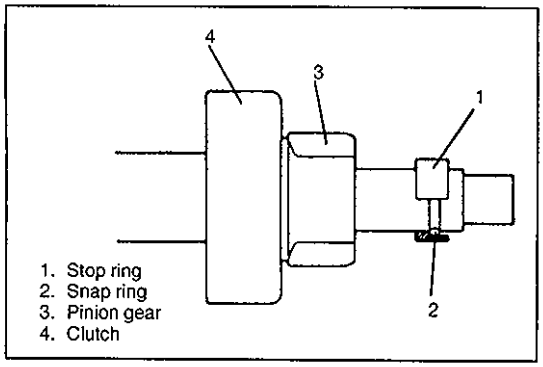

6) Draw off over running clutch, as follows:
(1) Draw stop ring toward clutch side.
(2) Remove snap ring and side off clutch.

Special Tool :
09900-06107

REASSEMBLY

Assemble in reverse order of Disassembly, noting the following.
1) Apply grease. (Refer to page 6G-3.)
2) Install pinion drive lever into drive housing, referring to 6G-3 especially for its direction.
3) Upon completion of assembly, carry out "PERFORMANCE TEST". (Refer to page 6G-12.)
4) Tighten battery cable nut to specified torque. (Refer to page 6G-6)

INSPECTION

1. ARMATURE

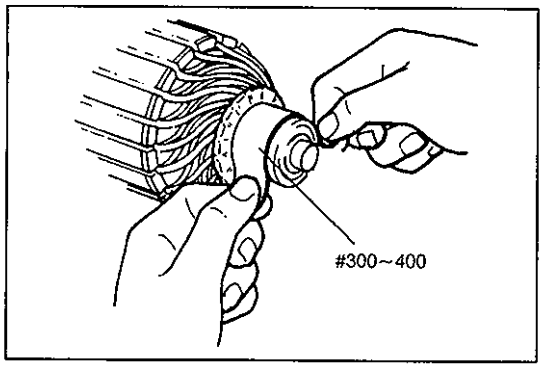

- Inspect commutator for dirt or burn. Correct with sandpaper or lathe, if necessary.

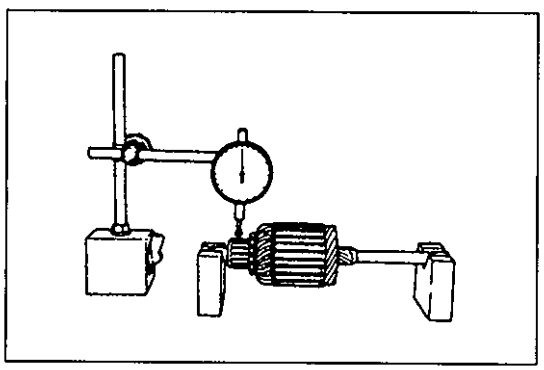

- Check commutator for uneven wear. If deflection of dial gauge pointer exceeds limit, repair or replace.

NOTE:
Below specification presupposes that armature is free from bend. Bent shaft must be replaced.

Commutator out round
Standard: 0.05 mm (0.0019 in.) or less
Limit: 0.4 mm (0.015 in.)

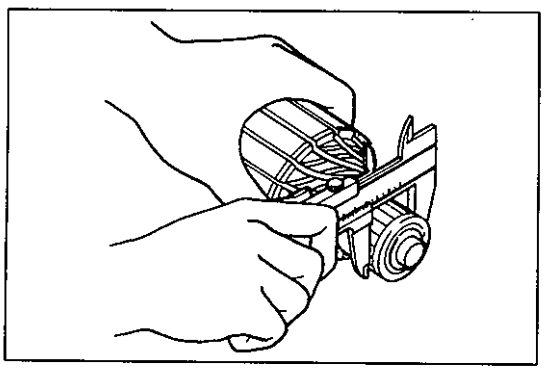

- Inspect commutator for wear.
If below limit, replace armature.

Commutator outside diameter
Standard: 32.0 mm (1.26 in.)
Limit: 31.4 mm (1.24 in.)

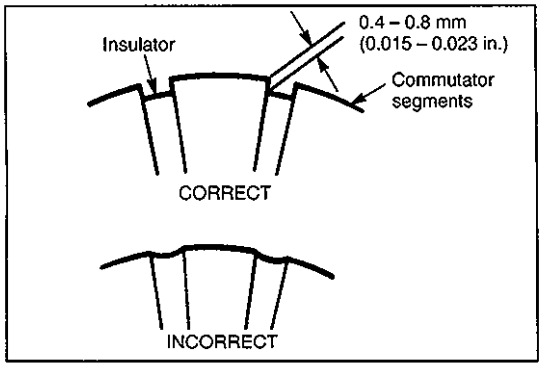

- Inspect commutator for insulator depth. Correct or replace if below limit.

Commutator mica depth
Standard: 0.4 – 0.6 mm (0.015 – 0.023 in.)
Limit: 0.2 mm (0.0078 in.)

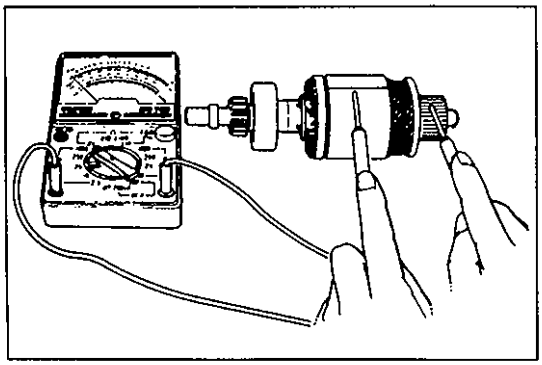

- **Ground test**
Check commutator and armature core. If there is continuity, armature is grounded and must be replaced.

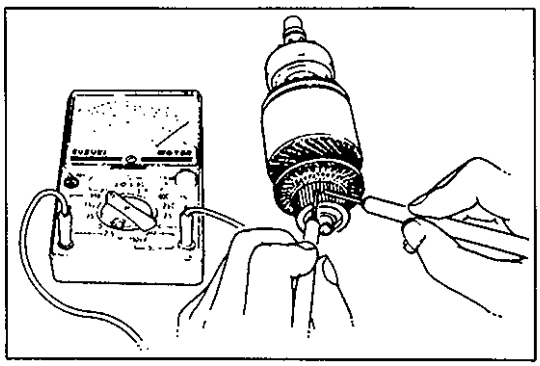

- **Open circuit test**
Check for continuity between segments. If there is no continuity at any point, there is an open circuit and armature must be replaced.

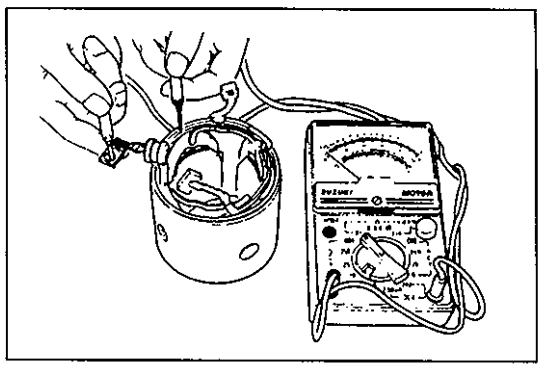

2. FIELD COIL

Ground test
Check continuity between brush and bare surface.
If there is continuity, field windings are grounded.
The yoke ass'y must be replaced.

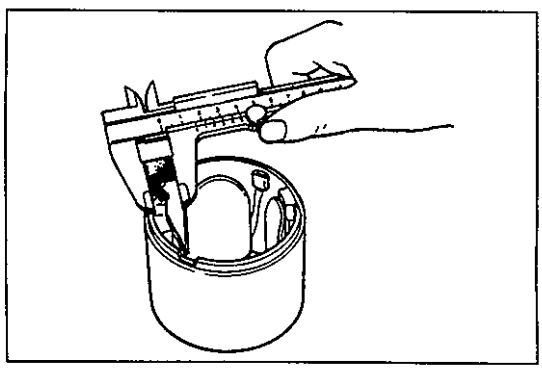

3. BRUSH

Check brushes for wear. If below limit, replace brush.

Brush length
Standard: 17.0 mm (0.67 in.)
Limit: 11.5 mm (0.45 in.)

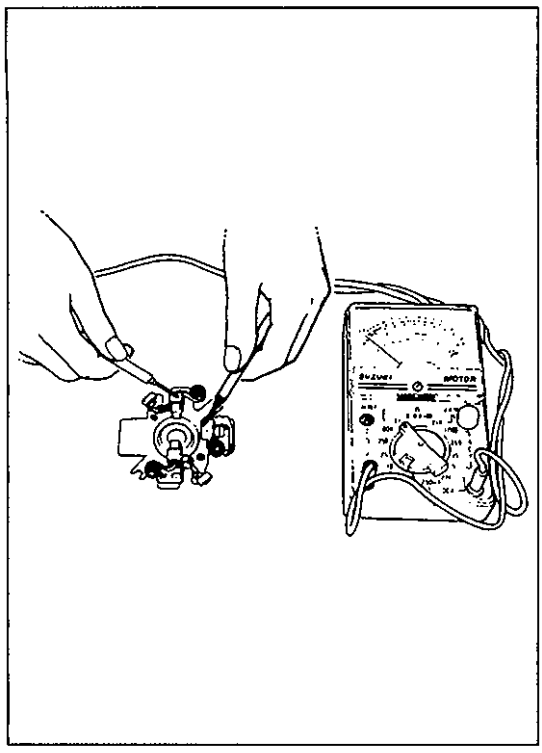

4. BRUSH HOLDER

Check movement of brush in brush holder. If brush movement within brush holder is sluggish, check brush holder for distortion and sliding faces for correct contamination.
Clean or correct as necessary.
Clean for continuity across insulated brush holder (positive side) and grounded brush holder (negative side).
If continuity exists, brush holder is grounded due to defective insulation and should be replaced.

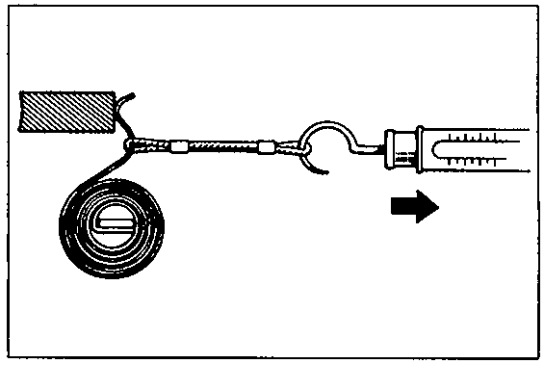

5. SPRING

Inspect brush spring for wear, damage or other abnormal conditions. Replace if necessary.

Brush spring tension

Standard: 1.95 kg (4.3 lb)
Limit: 0.9 kg (1.98 lb)

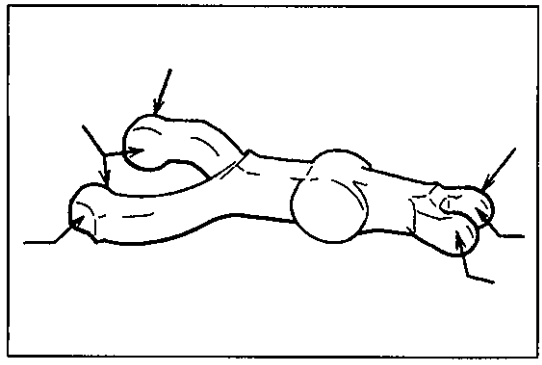

6. DRIVE LEVER

Inspect drive lever for wear. Replace if necessary.

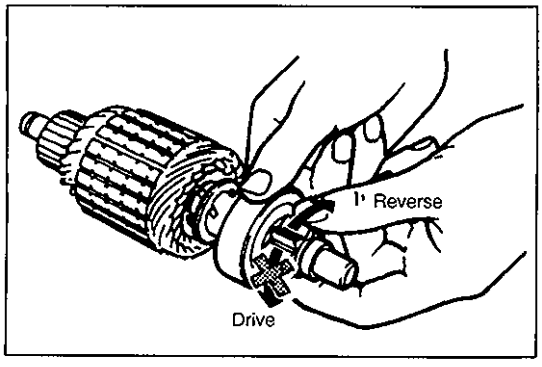

7. PINION AND OVER-RUNNING CLUTCH

- Inspect pinion for wear, damage or other abnormal conditions. Check that clutch locks up when turned in direction of drive and rotates smoothly in reverse direction. Replace if necessary.

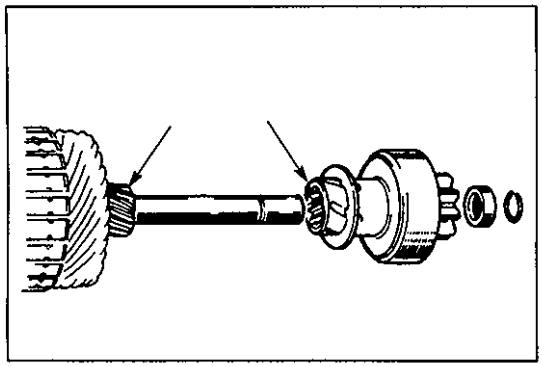

- Inspect spline teeth for wear or damage. Replace if necessary. Inspect pinion for smooth movement.

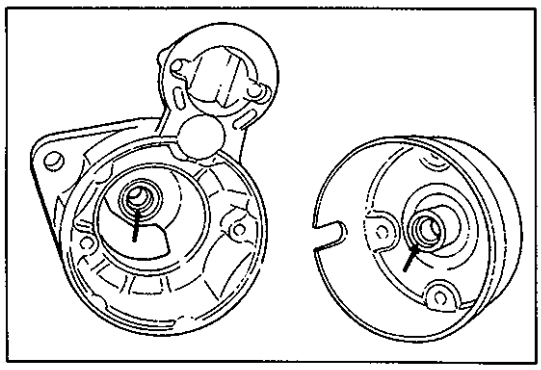

8. ARMATURE SHAFT BUSH

Inspect bushes for wear or damage. Replace if necessary.

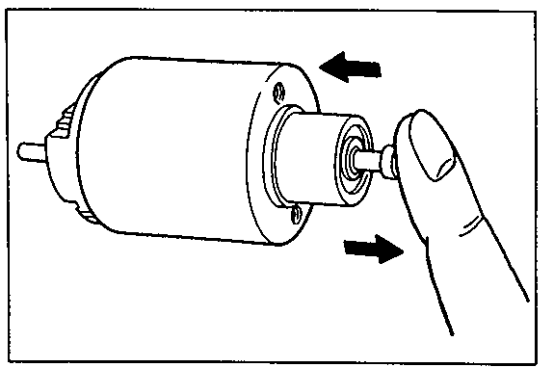

9. MAGNETIC SWITCH

Push in plunger and release it. Plunger should return quickly to its original position. Replace if necessary.

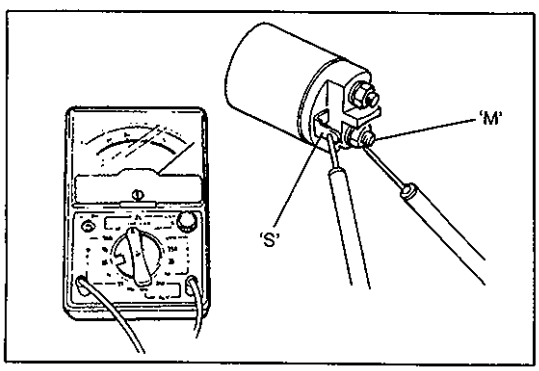

- **Pull-in coil open circuit test**

Check for continuity across magnetic switch 'S' terminal and 'M' terminal. If no continuity exists, coil is open and should be replaced.

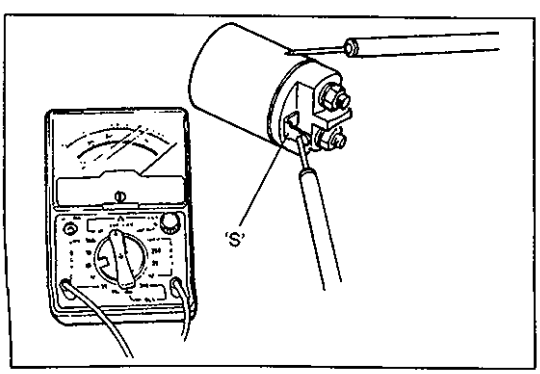

- **Hold-in coil open circuit test**

Check for continuity across magnetic switch 'S' terminal and coil case. If no continuity exists, coil is open and should be replaced.

PERFORMANCE TEST

CAUTION:
These tests must be performed within 3 - 5 seconds to avoid coil from burning.

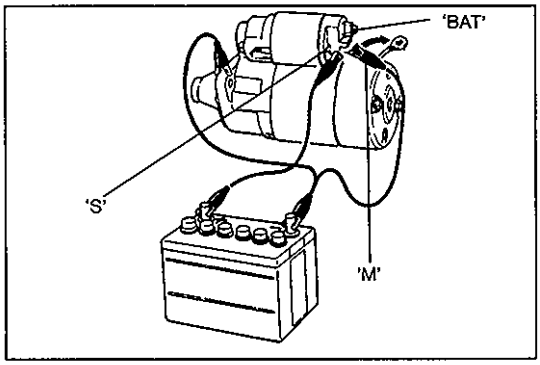

- **PULL-IN TEST**

Connect battery to magnetic switch as shown.
Check that pinion moves outward.
If pinion does not move, replace magnetic switch.

NOTE:
Before testing, disconnect field coil lead from Terminal 'M'.

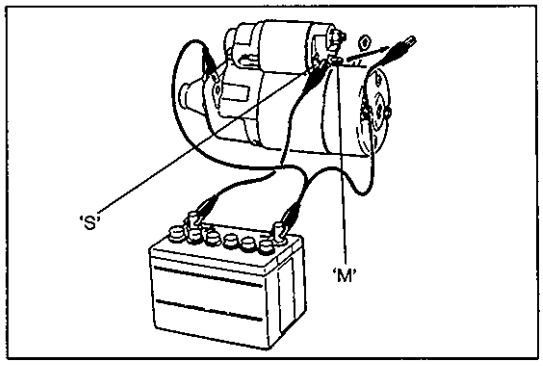

- **HOLD-IN TEST**

While connected as left figure with pinion out, disconnect negative lead from terminal 'M'.
Check that pinion remains out.
If pinion returns inward, replace magnetic switch.

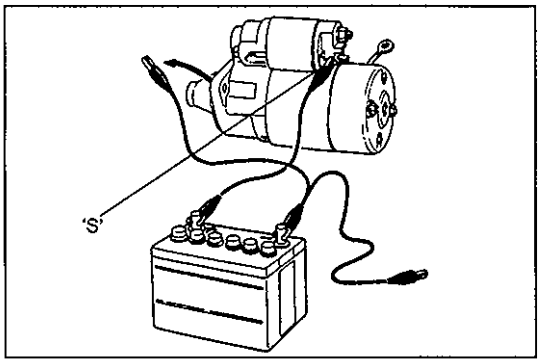

- **CHECK PINION RETURN**

Disconnect negative lead from magnetic switch body.
Check that pinion returns inward.
If pinion does not return, replace magnetic switch.

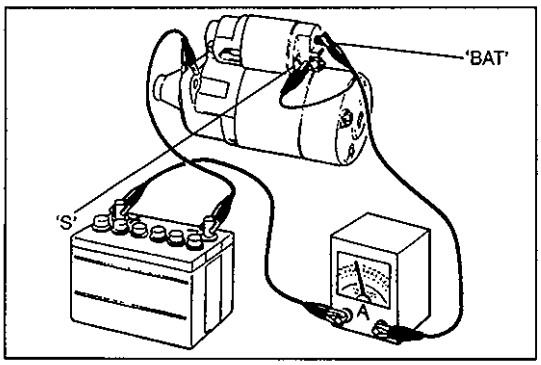

- **NO-LOAD PERFORMANCE TEST**

a) Connect battery and ammeter to starter as shown.
b) Check that starter rotates smoothly and steadily with pinion moving out. Check that ammeter reads specified current.

Specified current: Less than 60 A at 11.5 V

SPECIFICATIONS

Voltage			12 volts
Output			0.9 kW
Rating			30 seconds
Direction of rotation			Clockwise as viewed from pinion side
Brush length			17.0 mm (0.67 in.)
Number of pinion teeth			8
Performance		Condition	Guarantee
Around at 20°C (68°F)	No load characteristic	11.5V	60 A maximum 6600 rpm minimum
	Load characteristic	9 V 150 A	2.8 N·m (0.28 kg-m, 2.0 lb-ft) 1900 rpm minimum
	Locked rotor current	5 V	500 A maximum 11.3 N·m (1.13 kg-m, 8.2 lb-ft) minimum
	Magnetic switch operating voltage		8 volts maximum

REQUIRED SERVICE MATERIAL

MATERIAL	RECOMMENDED SUZUKI PRODUCT	USE
Lithium grease	SUZUKI SUPER GREASE A (99000-25010)	• Armature shaft. • Over-running clutch. • Commutator end cap. • Drive lever.

SPECIAL TOOL

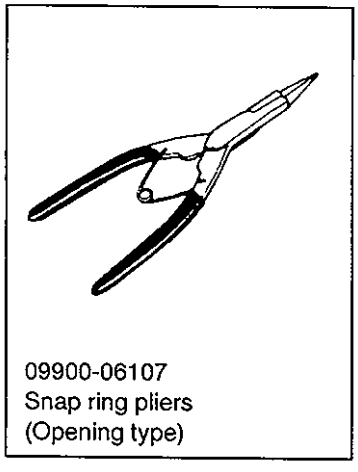

09900-06107
Snap ring pliers
(Opening type)

SECTION 6H

CHARGING SYSTEM

WARNING:
For vehicles equipped with Supplemental Restraint (Air Bag) System

- **Service on and around the air bag system components or wiring must be performed only by an authorized SUZUKI dealer. Refer to "Air Bag System Components and Wiring Location View" under "General Description" in air bag system section in order to confirm whether you are performing service on or near the air bag system components or wiring. Please observe all WARNINGS and "Service Precautions" under "On-Vehicle Service" in air bag system section before performing service on or around the air bag system components or wiring. Failure to follow WARNINGS could result in unintentional activation of the system or could render the system inoperative. Either of these two conditions may result in severe injury.**
- **Technical service work must be started at least 90 seconds after the ignition switch is turned to the "LOCK" position and the negative cable is disconnected from the battery. Otherwise, the system may be activated by reserve energy in the Sensing and Diagnostic Module (SDM).**

CONTENTS

GENERAL DESCRIPTION 6H- 2
BATTERY 6H- 2
GENERATOR 6H- 4
DIAGNOSIS 6H- 6
BATTERY 6H- 6
GENERATOR 6H- 8
ON-VEHICLE SERVICE 6H-11
BATTERY 6H-11
Jump Starting in Case of Emergency 6H-11
Dismounting 6H-12
Handling 6H-12
Remounting 6H-12
GENERATOR 6H-12
Generator Belt 6H-12
UNIT REPAIR OVERHAUL 6H-13
GENERATOR 6H-13
Dismounting 6H-13
Remounting 6H-14
Disassembly 6H-15
Inspection 6H-18
Replace Brush 6H-20
Reassembly 6H-21
SPECIFICATIONS 6H-23
BATTERY 6H-23
GENERATOR 6H-23
TIGHTENING TORQUE SPECIFICATIONS 6H-23

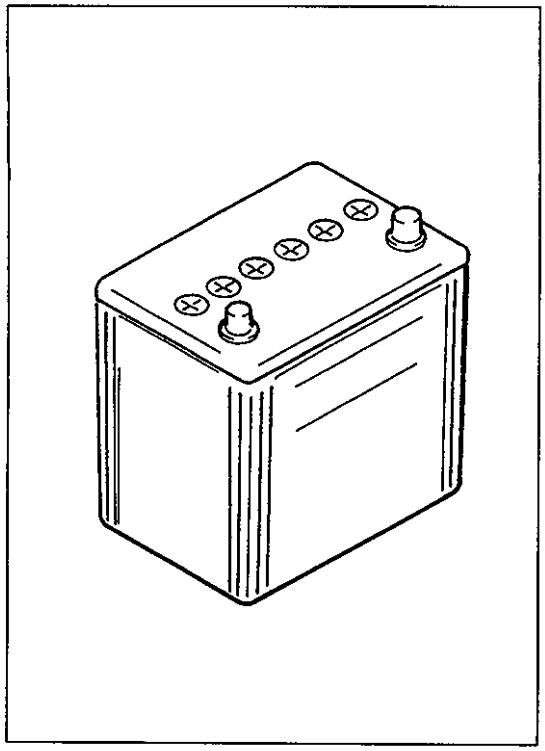

GENERAL DESCRIPTION

BATTERY

The battery has three major functions in the electrical system.

- It is a source of electrical energy for cranking the engine.
- It acts as a voltage stabilizer for the electrical system.
- It can, for a limited time, provide energy when the electrical load exceeds the output of the generator.

CARRIER AND HOLD-DOWN

The battery carrier should be in good condition so that it will support the battery securely and keep it level.

Before installing the battery, the battery carrier and hold-down clamp should be clean and free from corrosion and make certain there are no parts in carrier.

To prevent the battery from shaking in its carrier, the hold-down bolts should be tight enough but not over-tightened.

ELECTROLYTE FREEZING

The freezing point of electrolyte depends on its specific gravity. Since freezing may ruin a battery, it should be protected against freezing by keeping it in a fully charged condition. If a battery is frozen accidentally, it should not be charged until it is warmed.

SULFATION

If the battery is allowed to stand for a long period in discharged condition, the lead sulfate becomes converted into a hard, crystalline substance, which will not easily turn back to the active material again during the subsequent recharging. "Sulfation" means the result as well as the process of that reaction.

Such a battery can be revived by very slow charging and may be restored to usable condition but its capacity is lower than before.

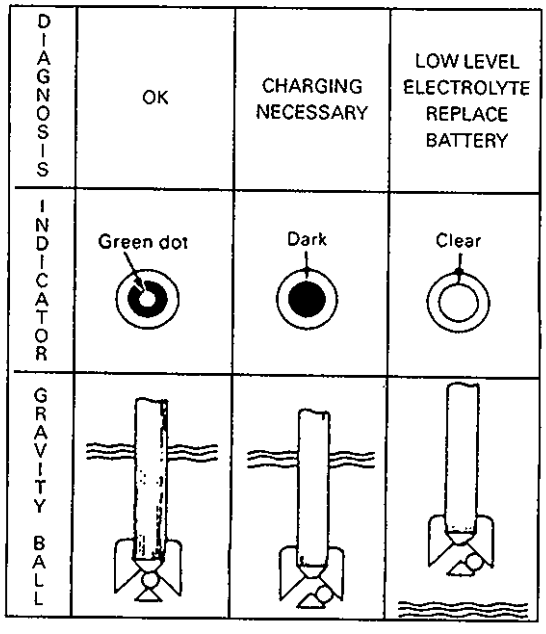

BUILT-IN INDICATOR (IF EQUIPPED)

The battery has a built-in temperature compensated indicator in the top of the battery. This indicator is to be used with the following diagnostic procedure. When checking the indicator, make sure that the battery has a clean top. A light may be needed in some poorly-lit areas.

Three types of indication available under normal operation are as follows.

1. **Green Dot**
   Battery is sufficiently charged for testing.
2. **Dark**
   Battery must be charged before testing.
   If there is a cranking complaint, battery should be tested as described in Diagnosis section. Charging and electrical systems should also be checked at this time.
3. **Clear or Light Yellow**
   This means that fluid level is below the bottom of hydrometer. Its possible cause is excessive or prolonged charging, a broken case, excessive tipping or normal battery deterioration.
   When the battery is found in such condition, it is possible that high charging voltage is caused by the faulty charging system and therefore, charging and electrical systems need to be checked. If there is a trouble in cranking and its cause lies in the battery, it should be replaced.

CARE OF BATTERY

WARNING:
- **Never expose battery to open flame or electric spark because of battery generate gas which is flammable and explosive.**
- **Do not allow battery fluid to contact eyes, skin, fabrics, or painted surfaces as fluid is a corrosive acid. Flush any contacted area with water immediately and thoroughly.**
- **Batteries should always be kept out of reach of children.**

1) The battery is a very reliable component, but needs periodical attentions.
   - Keep the battery carrier clean
   - Prevent rust formation on the terminal posts
   - Keep the electrolyte up to the upper level uniformly in all cells.

   When keeping battery on vehicle over a long period of time, follow instructions given below.
   - Weekly, start the engine and run it until it reaches normal operating temperature with engine speed of 2000 to 3000 rpm. Make sure all electric switches are off before storing the vehicle.
   - Recharge the battery twice a month to prevent it from discharging excessively. This is especially important when ambient temperature is low.
     The battery discharges even when it is not used, while vehicles are being stored. Battery electrolyte can freeze and battery case can crack at cold ambient condition if battery is not properly charged.

2) Keep the battery cable connections clean.
   The cable connections, particularly at the positive (+) terminal post, tend to become corroded. The product of corrosion, or rust, on the mating faces of conductors resists the flow of current. Clean the terminals and fittings periodically to ensure good metal-to-metal contact, and grease the connections after each cleaning to protect them against rusting.

3) Be always in the know as to the state of charge of the battery.
   The simplest way to tell the state of charge is to carry out a hydrometer test. The hydrometer is an instrument for measuring the specific gravity (S.G.) of the battery electrolyte. The S.G. of the electrolyte is indicative of the state of charge. Refer to "DIAGNOSIS" of BATTERY in this section.

GENERATOR

The generator is a small and high performance type with an IC regulator incorporated.
The internal components are connected electrically as shown below figure.

The generator features are as follows:

- Solid state regulator is mounted inside the generator.
- All regulator components are enclosed into a solid mold.
- This unit along with the brush holder assembly is attached to the rear housing.
- The IC regulator uses integrated circuits and controls the voltage produced by the generator, and the voltage setting cannot be adjusted.
- The generator rotor bearings contain enough grease to eliminate the need for periodic lubrication. Two brushes carry current through the two slip rings to the field coil mounted on the rotor, and under normal conditions will provide long period of attention-free service.
- The stator windings are assembled on the inside of a laminated core that forms part of the generator frame.
- A condenser mounted in the rear housing suppresses radio noise.

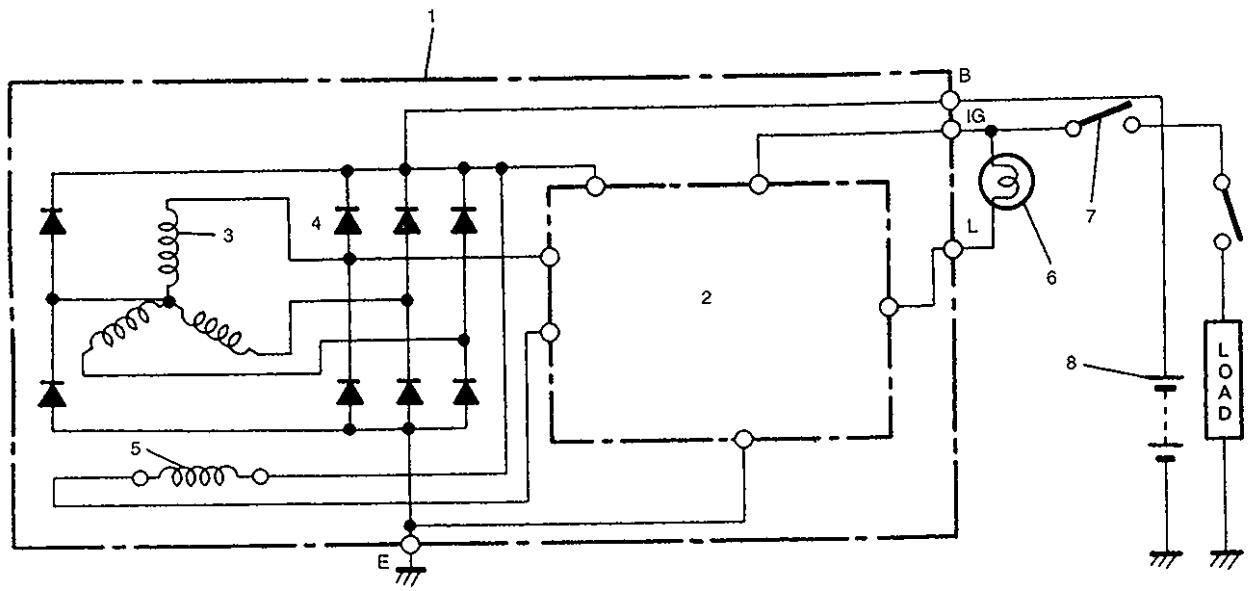

1. Generator with regulator ass'y
2. I.C. regulator
3. Stator coil
4. Diode
5. Field coil (rotor coil)
6. Charge indicator light
7. Main switch
8. Battery

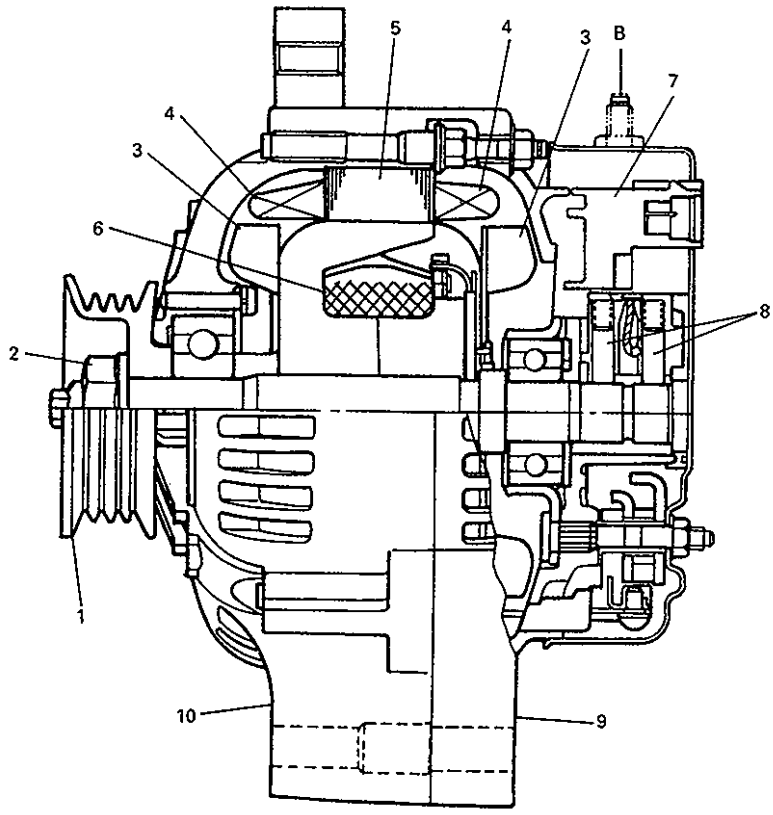

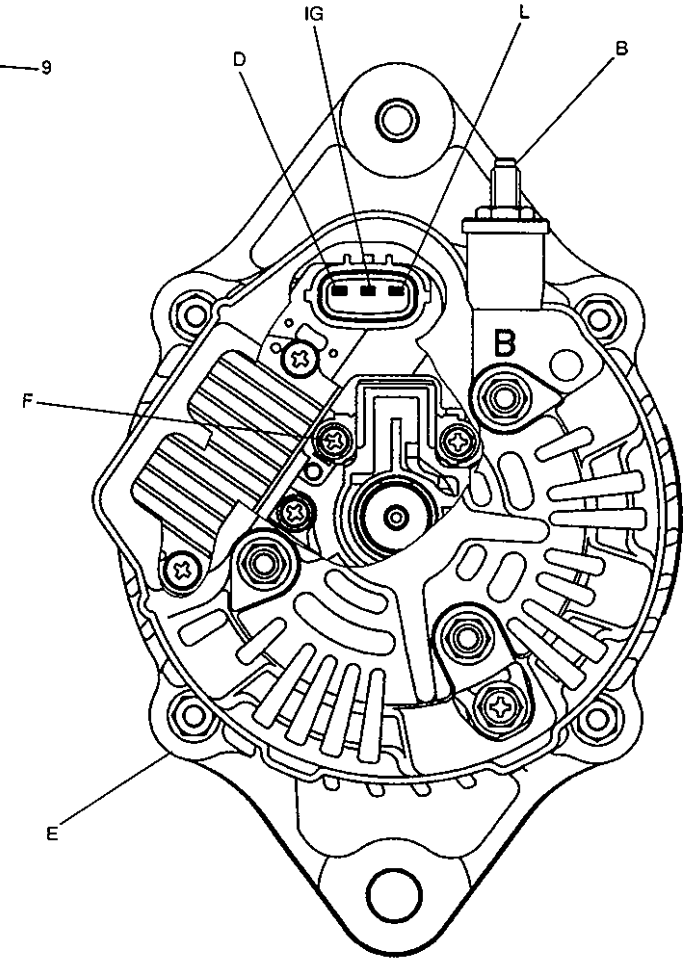

1. Pulley
2. Pulley nut
3. Rotor fan
4. Stator coil
5. Stator core
6. Field coil
7. Regulator
8. Brush
9. Rear end frame
10. Drive end frame

B : Generator output (Battery terminal)
D : Dummy terminal
E : Ground
F : Field coil terminal
IG : Ignition terminal
L : Lamp terminal

DIAGNOSIS

BATTERY

COMMON CAUSES OF FAILURE

A battery is not designed to last indefinitely; however, with proper care, it will provide many years of service. If the battery performs satisfactorily during test but fails to operate properly for no apparent reason, the following are some factors that may point to the cause of trouble:

- Accessories left on overnight or for an extended period without the generator operating.
- Slow average driving speeds for short periods.
- Electrical load exceeding generator output particularly with addition of after market equipment.
- Defects in charging system such as high resistance, slipping drive belt, loose generator output terminal, faulty generator or voltage regulator. Refer to "GENERATOR" in this "DIAGNOSIS" section.
- Battery abuse, including failure to keep battery cable terminals clean and tight or loose battery hold down.
- Mechanical problems in electrical system such as shorted or pinched wires.

VISUAL INSPECTION

Check for obvious damage, such as cracked or broken case or cover, that could permit loss of electrolyte. If obvious damage is noted, replace battery. Determine cause of damage and correct as needed.

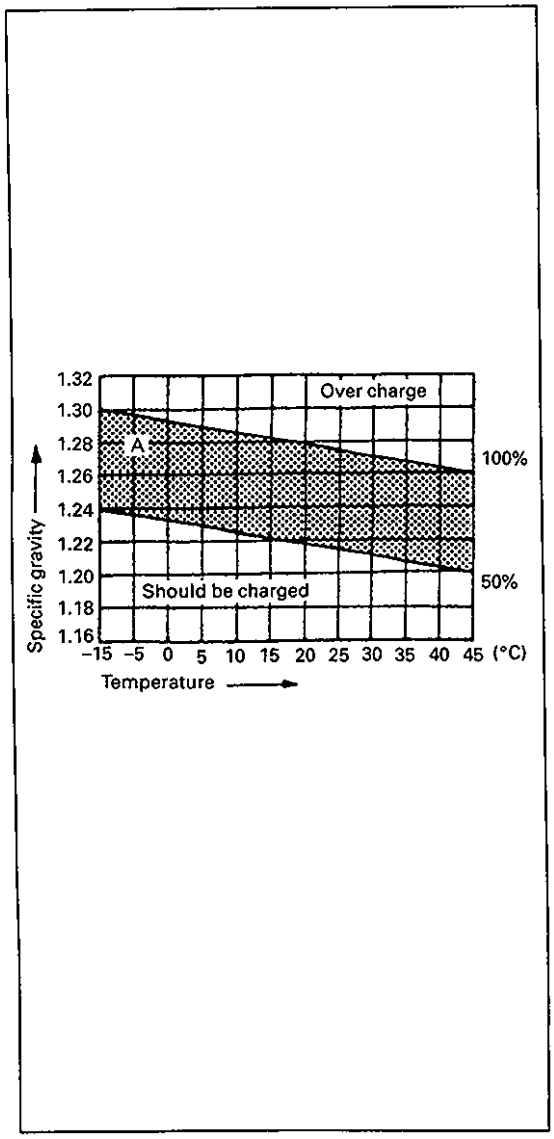

HYDROMETER TEST

The direct method of checking the battery for state of charge is to carry out a high rate discharge test, which involves a special precise voltmeter and an expensive instrument used in the service shops, but not recommendable to the user of the vehicle.

At 20 °C of battery temperature (electrolyte temperature):

– The battery is in FULLY CHARGED STATE if the electrolyte S.G. is 1.280.
– The battery is in HALF CHARGED STATE if the S.G. is 1.220.
– The battery is in NEARLY DISCHARGED STATE if the S.G. is 1.150 and is in danger of freezing.

As the S.G. varies with the temperature, if battery temperature is not at 20°C (68°F), you have to correct your S.G. reading (taken with your hydrometer) to the value at 20°C (68°F) and apply the corrected S.G. value to the three-point guide stated value.

For the manner of correction, refer to the graph showing the relation between S.G. value and temperature at the left.

How to use the temperature-corrected state-of-charge graph

Suppose your S.G. reading is 1.28 and the battery temperature is –5 °C (23°F). Locate the intersection of the –5 °C line and the 1.28 S.G. line.

The intersection is within the "A" zone (shaded area in the graph) and that means CHARGED STATE.

To know how much the battery is charged, draw a line parallel to the zone demarcation line and extend it to the right till it meets with the percentage scale. In the present example, the line meets at about 85% point on the percentage scale. Therefore, the battery is charged up to the 85% level.

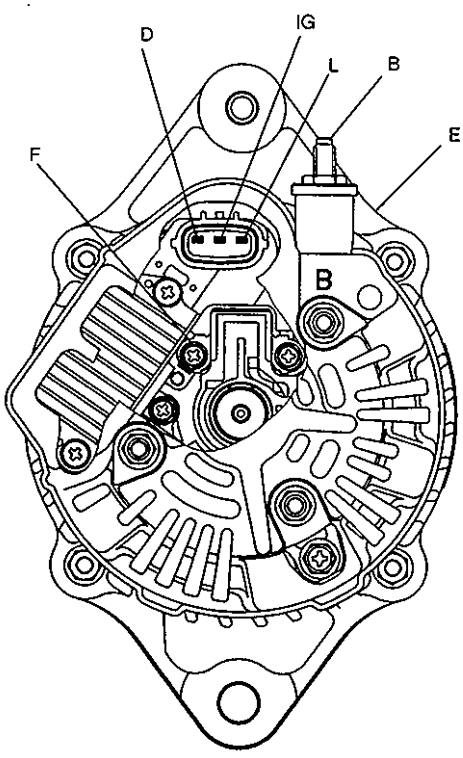

B : Generator output (Battery terminal)
D : Dummy terminal
E : Ground
F : Field coil terminal
IG : Ignition terminal
L : Lamp terminal

GENERATOR

CAUTION:
- **Do not mistake polarities of IG terminal and L terminal.**
- **Do not create a short circuit between IG and L terminals. Always connect these terminals through a lamp.**
- **Do not connect any load between L and E.**
- **When connecting a charger or a booster battery to vehicle battery, refer to this section describing battery charging.**

Trouble in charging system will show up as one or more of following conditions:
1) Faulty indicator lamp operation.
2) An undercharged battery as evidenced by slow cranking or indicator dark.
3) An overcharged battery as evidenced by excessive spewing of electrolyte from vents.

Noise from generator may be caused by a loose drive pulley, loose mounting bolts, worn or dirty bearings, defective diode, or defective stator.

FAULTY INDICATOR LAMP OPERATION

PROBLEM	POSSIBLE CAUSE	CORRECTION
Charge light does not light with ignition ON and engine off	• Fuse blown • Light burned out • Wiring connection loose • IC regulator or field coil faulty • Poor contact between brush and slip ring	Check fuse. Replace light. Tighten loose connection. Check generator. Repair or replace.
Charge light does not go out with engine running (battery requires frequent recharging)	• Drive belt loose or worn • IC regulator or alternator faulty • Wiring faulty	Adjust or replace drive belt. Check charging system. Repair wiring.

UNDERCHARGED BATTERY

This condition, as evidenced by slow cranking or indicator clear with red dot can be caused by one or more of the following conditions even though indicator lamp may be operating normal.
Following procedure also applies to cars with voltmeter and ammeter.

1) Make sure that undercharged condition has not been caused by accessories left on for extended period of time.
2) Check drive belt for proper tension.

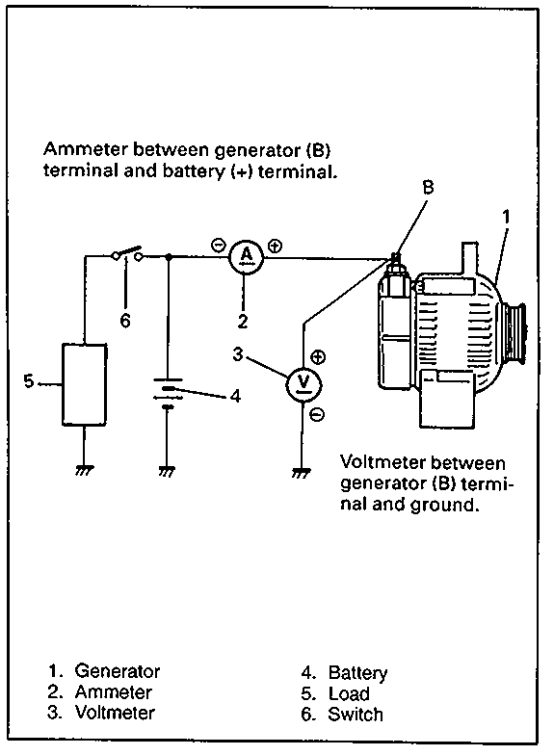

3) If battery defect is suspected, refer to Battery section.
4) Inspect wiring for defects. Check all connections for tightness and cleanliness, battery cable connections at battery, starter and ignition ground cable.
5) Connect voltmeter and ammeter as shown in left figure.

Voltmeter
Set between generator B terminal and ground.

Ammeter
Set between generator B terminal and battery (+) terminal.

NOTE:
Use fully charged battery.

6) Measure current and voltage.

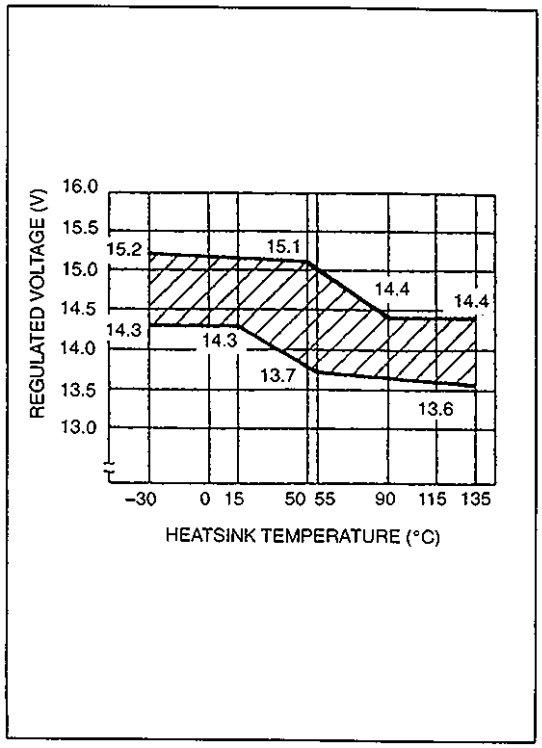

No-load Check

1) Run engine from idling up to 2,000 rpm and read meters.

NOTE:
Turn off switches of all accessories (wiper, heater etc.).

Standard current	10 A maximum
Standard voltage	14.1 – 15.2 v at 20 °C (68 °F)

NOTE:
Consideration should be taken that voltage will differ somewhat with regulator case temperature as shown in left figure.

Higher Voltage

If voltage is higher than standard value, check ground of brush.
If brush ground is correct, replace IC regulator.

Lower Voltage

If voltage is lower than standard value, proceed to following check.

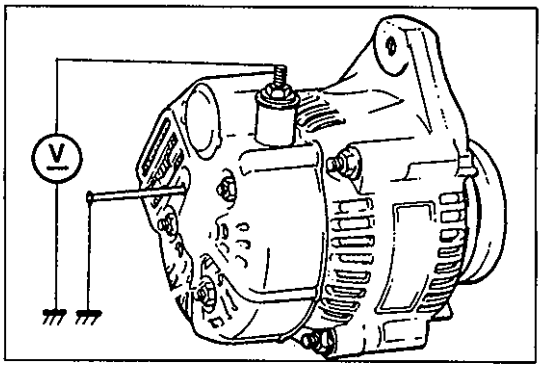

2) Ground F terminal and start engine, then measure voltage at B terminal as shown in left figure.
   - Voltage is higher than standard value
     It is considered that generator itself is good but IC regulator has been damaged, replace IC regulator.
   - Voltage is lower than standard value
     Generator itself has problem, check the generator.

Load Check

1) Run engine at 2,000 rpm and turn on head light and heater motor.
2) Measure current and if it is less than 20 A repair or replace generator.

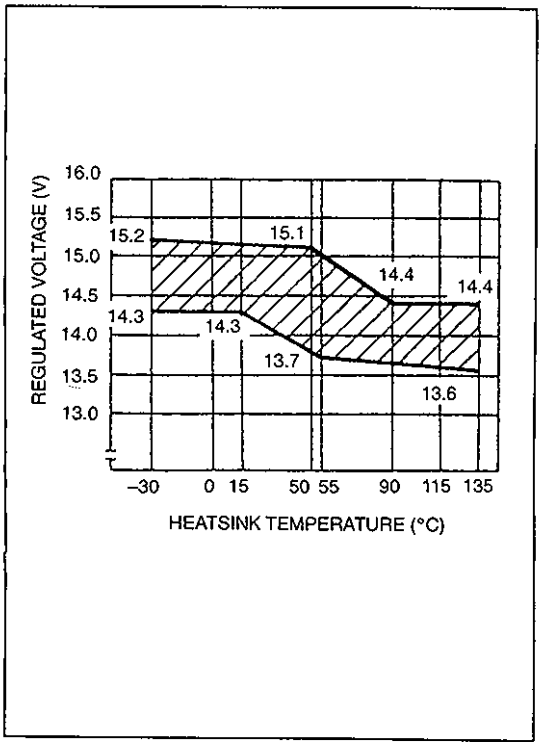

OVERCHARGED BATTERY

1) To determine battery condition, refer to Battery section.
2) If obvious overcharge condition exists as evidenced by excessive spewing of electrolyte, proceed to disassembly section of generator service and check field windings for grounds and shorts. If problem exists, replace rotor.
3) With engine running at 2,000 rpm, measure voltage.
4) If measured voltage is out of standard value, check brush ground or IC regulator.

ON-VEHICLE SERVICE

BATTERY

JUMP STARTING IN CASE OF EMERGENCY

WITH AUXILIARY (BOOSTER) BATTERY

CAUTION:
If vehicle is manual transmission model and has a catalytic converter, do not push or tow it to start. Damage to its emission system and/or to other parts may result.

Both booster and discharged battery should be treated carefully when using jumper cables. Follow procedure outlined below, being careful not to cause sparks.

WARNING:
- **Departure from these conditions or procedure described below could result in:**
  (1) Serious personal injury (particularly to eyes) or property damage from such causes as battery explosion, battery acid, or electrical burns.
  (2) Damage to electronic components of either vehicle.
- **Remove rings, watches, and other jewelry. Wear approved eye protection.**
- **Be careful so that metal tools or jumper cables do not contact positive battery terminal (or metal in contact with it) and any other metal on vehicle, because a short circuit could occur.**

1) Set parking brake and place automatic transmission in PARK (NEUTRAL on manual transmission). Turn off ignition, turn off lights and all other electrical loads.
2) Check electrolyte level. If it is below low level line, add distilled water.
3) Attach end of one jumper cable to positive terminal of booster battery and the other end of the same cable to positive terminal of discharged battery. (Use 12-volt battery only to jump start engine).
4) Attach one end of the remaining negative cable to negative terminal of booster battery, and the other end to a solid engine ground (such as exhaust manifold) at least 45 cm (18 in.) away from battery of vehicle being started.

WARNING:
Do not connect negative cable directly to negative terminal of dead battery.

5) Start engine of vehicle with booster battery and turn off electrical accessories. Then Start engine of the vehicle with discharged battery.
6) Disconnect jumper cables in the exact reverse order.

WITH CHARGING EQUIPMENT

CAUTION:
When jump starting engine with charging equipment, be sure equipment used is 12-volt and negative ground. Do not use 24-volt charging equipment. Using such equipment can cause serious damage to electrical system or electronic parts.

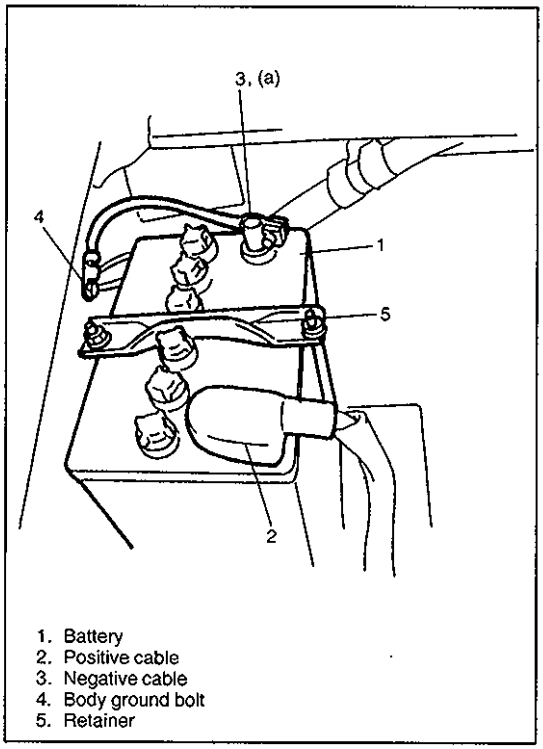

1. Battery
2. Positive cable
3. Negative cable
4. Body ground bolt
5. Retainer

DISMOUNTING

1) Disconnect negative cable.
2) Disconnect positive cable.
3) Remove retainer.
4) Remove battery.

HANDLING

When handling battery, following safety precautions should be followed:

- Hydrogen gas is produced by battery. A flame or spark near battery may cause the gas to ignite.
- Battery fluid is highly acidic. Avoid spilling on clothing or other fabric. Any spilled electrolyte should be flushed with large quantity of water and cleaned immediately.

REMOUNTING

1) Reverse removal procedure.
2) Torque battery cables to specification.

NOTE:
Check to be sure that ground cable has enough clearance to hood panel by terminal.

Tightening Torque
(a): 8.0 N·m (0.8 kg-m, 6.0 lb-ft)

GENERATOR

GENERATOR BELT

Refer to "COOLING FAN BELT" in SECTION 6B "ENGINE COOLING".

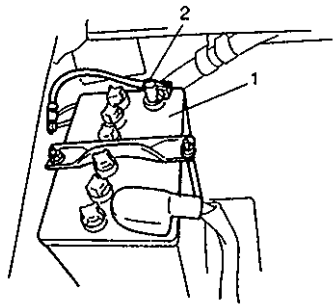

1. Battery 2. Negative (–) battery cable

UNIT REPAIR OVERHAUL

GENERATOR

DISMOUNTING

1) Disconnect negative (–) cable at battery.

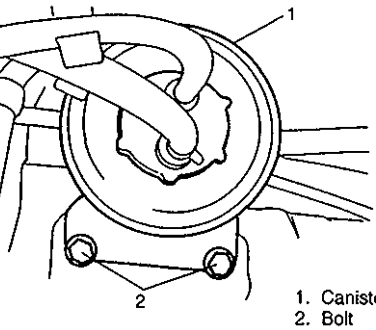

1. Canister
2. Bolt

2) Remove bolts and then canister together with its bracket.

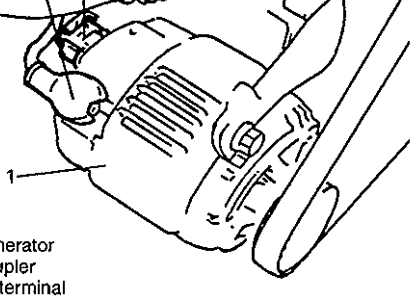

1. Generator
2. Coupler
3. "B" terminal

3) Disconnect "B" terminal wire and coupler from generator.

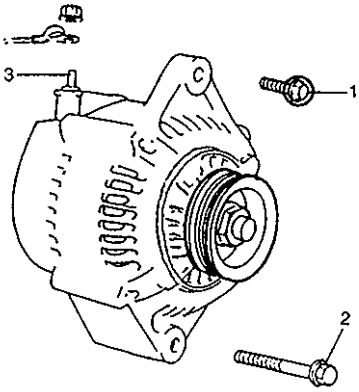

1. Upper generator bolt (Short)
2. Lower generator bolt (Long)
3. "B" terminal

4) Remove generator belt. Refer to SECTION 6B "ENGINE COOLING" in this manual.
5) Remove generator.

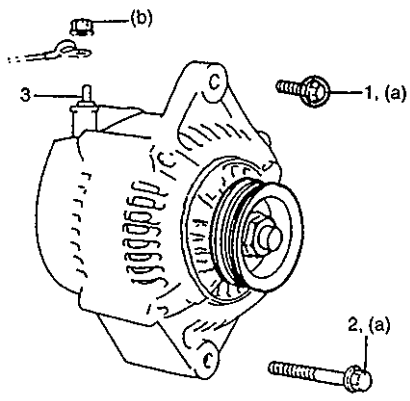

1. Upper generator bolt (Short)
2. Lower generator bolt (Long)
3. "B" terminal

REMOUNTING

1) Mount generator on the generator bracket.
2) Tighten generator bolts.

Tightening Torque
(a): 23 N·m (2.3 kg-m, 16.5 lb-ft)

3) Install generator (cooling fan) belt. Refer to SECTION 6B "ENGINE COOLING" in this manual.
4) Connect "B" terminal wire and coupler to generator.

Tightening Torque
(b): 8.0 N·m (0.8 kg-m, 6.0 lb-ft)

5) Install canister.
6) Connect negative (–) cable at battery.

DISASSEMBLY

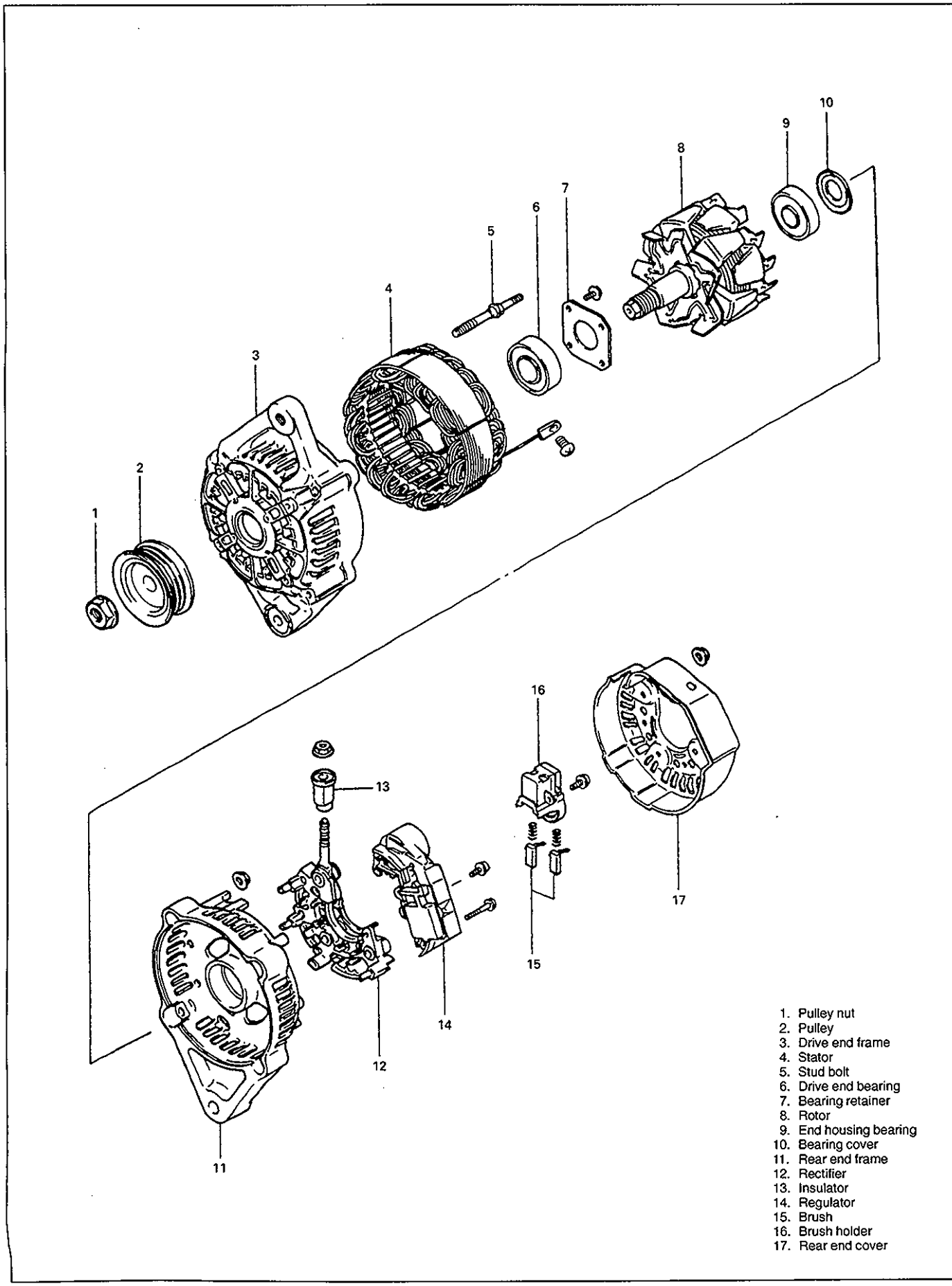

1. Pulley nut
2. Pulley
3. Drive end frame
4. Stator
5. Stud bolt
6. Drive end bearing
7. Bearing retainer
8. Rotor
9. End housing bearing
10. Bearing cover
11. Rear end frame
12. Rectifier
13. Insulator
14. Regulator
15. Brush
16. Brush holder
17. Rear end cover

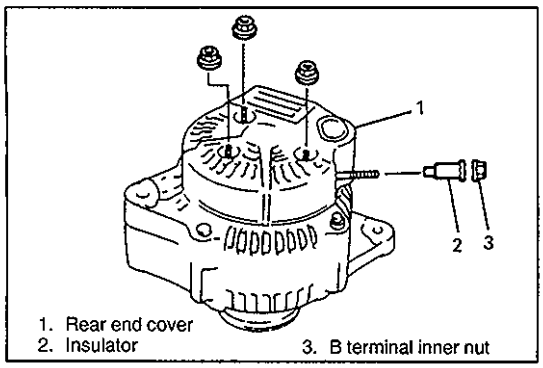

1) Remove B terminal inner nut and insulator.
2) Remove rear end cover.

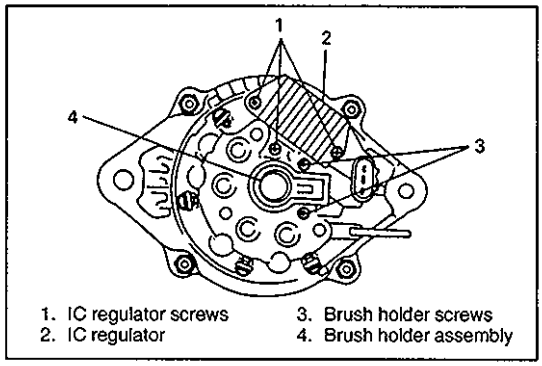

3) Remove 2 screws and pull out brush holder assembly.
4) Remove 3 screws and IC regulator.
5) Remove brush holder cover from brush holder.

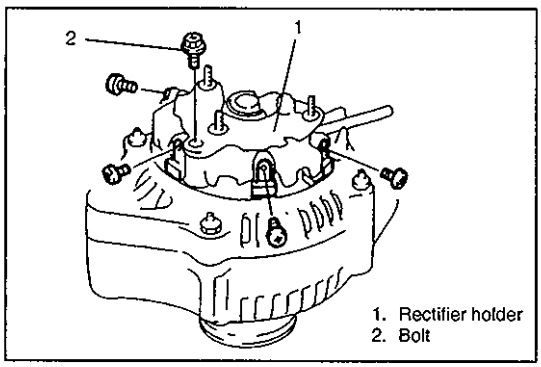

6) Remove rectifier holder.

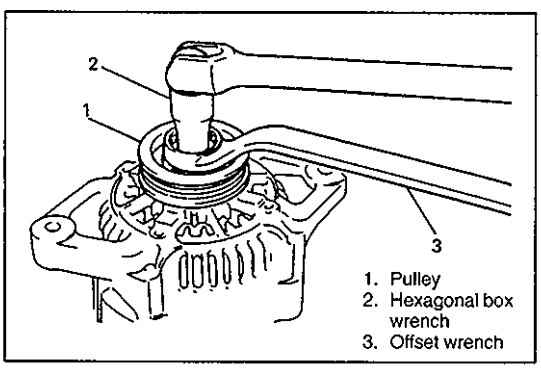

7) Hold shaft by using hexagonal box wrench and remove pulley nut, and then pull out pulley.

CAUTION:
- **To hold shaft, use hexagonal box. Duodecimal box may cause slipping and consequential shaft or tool damage.**
- **Do not attempt to hold pulley by using vise or pipe wrench so as not to distort it.**

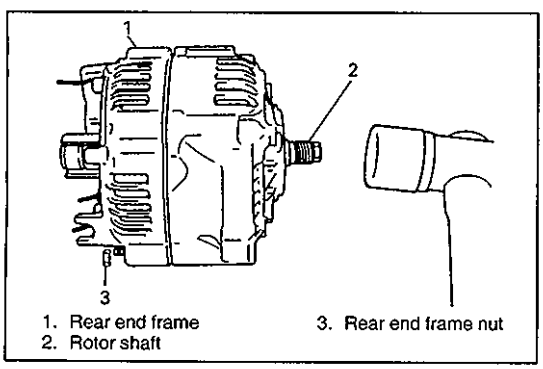

8) Remove 4 rear end frame nuts.
9) Drive out rear end frame with rotor tapping shaft lightly by using plastic hammer.
10) Separate rear end frame from rotor evenly by using plastic hammer.

CAUTION:
Do not hit shaft at slip ring side, when separating rotor and rear end frame.

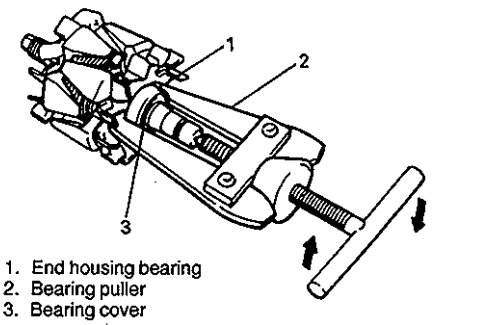

1. End housing bearing
2. Bearing puller
3. Bearing cover

11) If required, use bearing puller to remove end housing bearing and bearing cover.

CAUTION:
Care must be exercised so as not to distort cooling fan blade while applying puller.

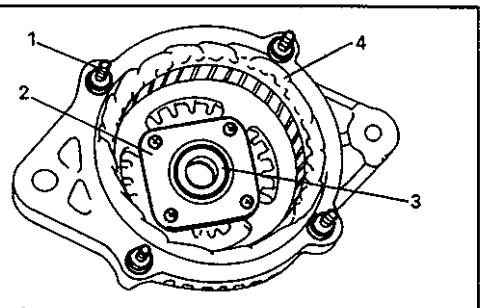

1. Stud bolt
2. Retaining plate
3. Drive end bearing
4. Stator

12) If required, remove 4 screws, retainer plate and then drive out drive end bearing.

13) If required, remove stud bolts and then pull out stator.

NOTE:
Heating drive end frame may facilitate removal of stator.

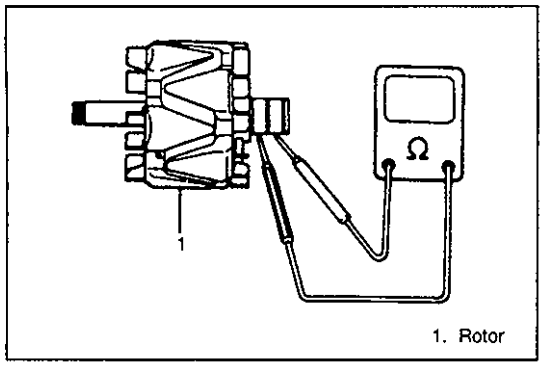

1. Rotor

INSPECTION

1. ROTOR

Open Circuit

Using ohmmeter, check for continuity between slip rings of rotor. If there is no continuity, replace rotor.

Standard resistance: About 2.9 Ω

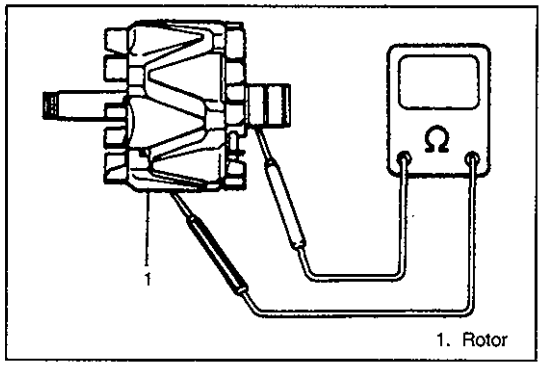

1. Rotor

Ground

Using ohmmeter, check that there is no continuity between slip ring and rotor. If there is continuity, replace rotor.

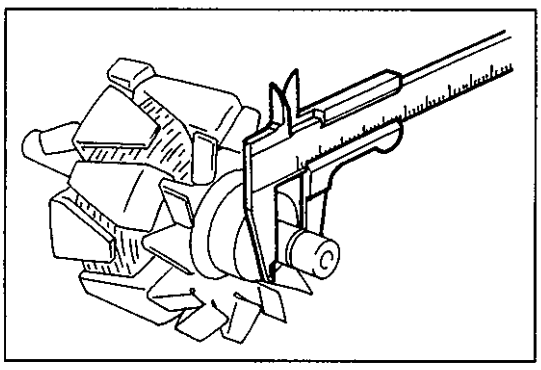

Slip Rings

- Check slip rings for roughness or scoring. If rough or scored, replace rotor.
- Using a vernier caliper, measure the slip ring diameter.

Standard diameter: 14.4 mm (0.567 in.)
Minimum diameter: 14.0 mm (0.551 in.)

If the diameter is less than minimum, replace the rotor.

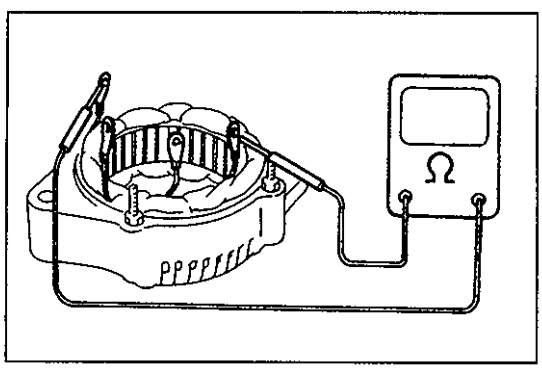

2. STATOR

Open Circuit

Using ohmmeter, check all leads for continuity. If there is no continuity, replace stator.

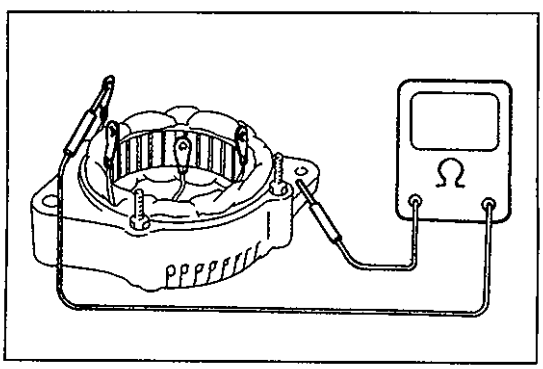

Ground

Using ohmmeter, check that there is no continuity between coil leads and stator core. If there is continuity, replace stator.

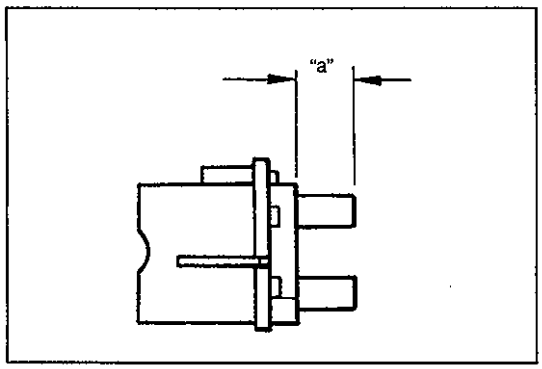

3. BRUSH

Exposed Brush Length

Check each brush for wear by measuring its length as shown. If brush is found worn down to service limit, replace brush. Refer to "Replace Brush" in this section.

Exposed brush length "a"
Standard: 10.5 mm (0.413 in.)
Limit : 4.5 mm (0.351 in.)

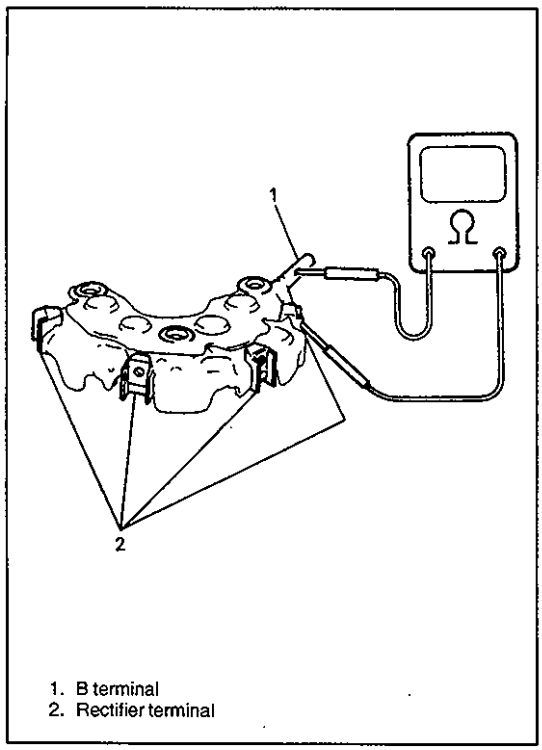

1. B terminal
2. Rectifier terminal

4. RECTIFIER

Positive Rectifier

1) Using an ohmmeter, connect one tester probe to the B terminal and the other to each rectifier terminal.
2) Reverse the polarity of the tester probes and repeat step 1).
3) Check that one shows continuity and the other shows no continuity.
   If there is continuity, replace the rectifier holder.

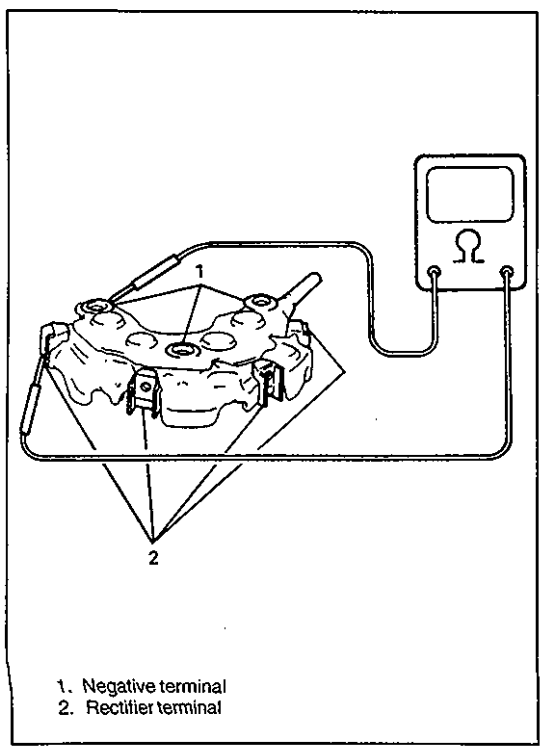

1. Negative terminal
2. Rectifier terminal

Negative Rectifier

1) Using an ohmmeter, connect one tester probe to each negative terminal and the other to each rectifier terminal.
2) Reverse the polarity of the tester probes and repeat step 1).
3) Check that one shows continuity and the other shows no continuity.
   If there is continuity, replace the rectifier holder.

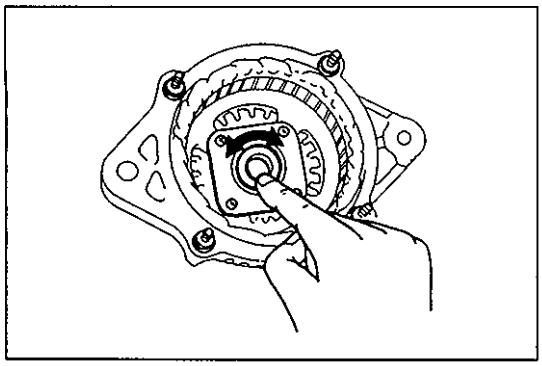

5. BEARING

Drive End Bearing

Check that the bearing is not rough or worn.

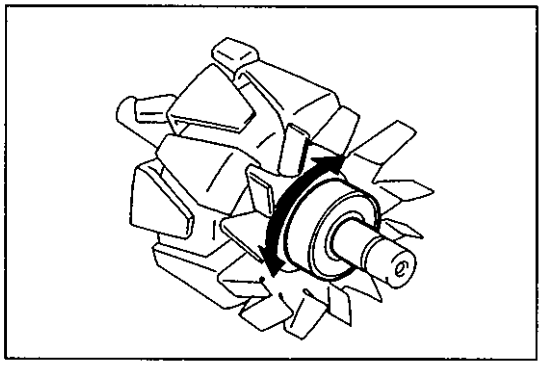

End Housing Bearing

Check that the bearing is not rough or worn.
When removal is necessary, refer to 6H-17.

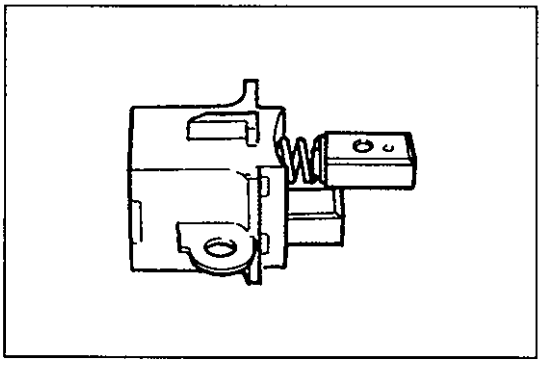

REPLACE BRUSH

1) Unsolder and remove the brush and spring.
2) Run the wire of a new brush through the spring and the hole in the brush holder, and insert the spring and brush into the brush holder.

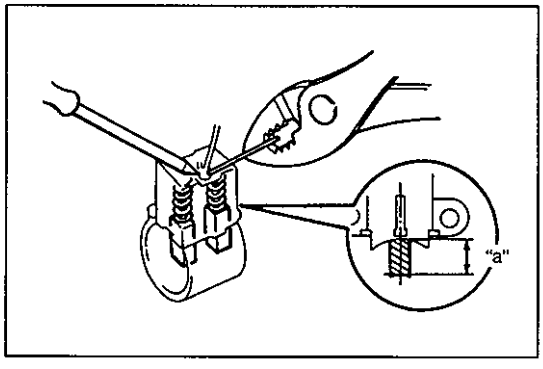

3) Solder the brush wire to the brush holder at specified exposed length.

Exposed length "a": 10.5 mm (0.413 in.)

4) Check that the brush moves smoothly in the brush holder.
5) Cut off the excess wire.
6) Apply insulation paint to the soldered area.

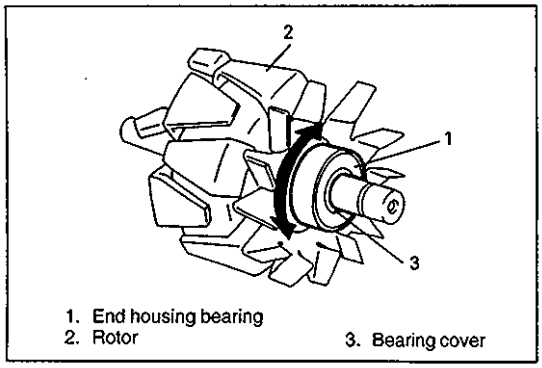

1. End housing bearing
2. Rotor
3. Bearing cover

REASSEMBLY

1) If end housing bearing is removed, install it.
2) Check end housing bearing turns smoothly.

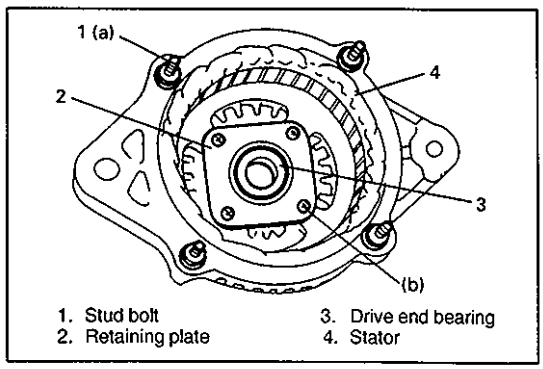

1. Stud bolt
2. Retaining plate
3. Drive end bearing
4. Stator

3) If stator is removed, install stator and tighten stud bolts.
4) If drive end bearing is removed, install it.
5) Check drive end bearing turns smoothly.

Tightening Torque
(a): 8.8 N·m (0.88 kg-m, 6.5 lb-ft)
(b): 2.6 N·m (0.26 kg-m, 2.0 lb-ft)

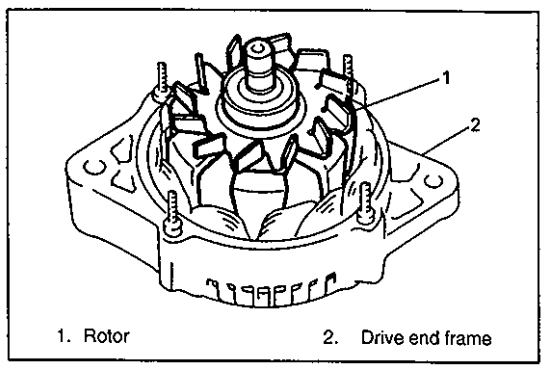

1. Rotor
2. Drive end frame

6) Place drive end frame on pulley, and then install rotor to drive end frame.

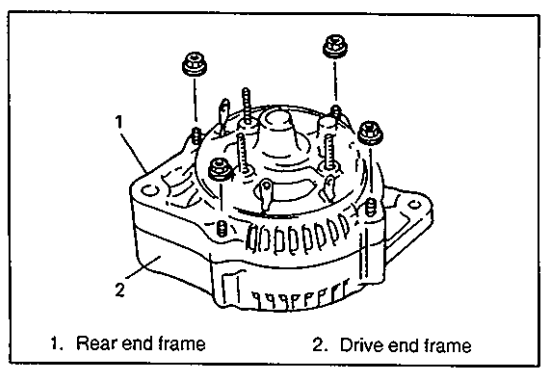

1. Rear end frame
2. Drive end frame

7) Install rear end frame to drive end frame.
8) Tighten 4 nuts to specified torque.

Tightening Torque
4.5 N·m (0.45 kg-m, 3.5 lb-ft)

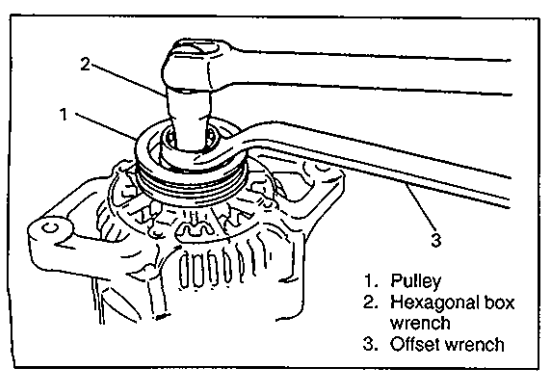

1. Pulley
2. Hexagonal box wrench
3. Offset wrench

9) Install pulley and tighten pulley nut with holding shaft by using hexagonal box wrench to specified torque.

Tightening Torque
111 N·m (11.1 kg-m, 80.5 lb-ft)

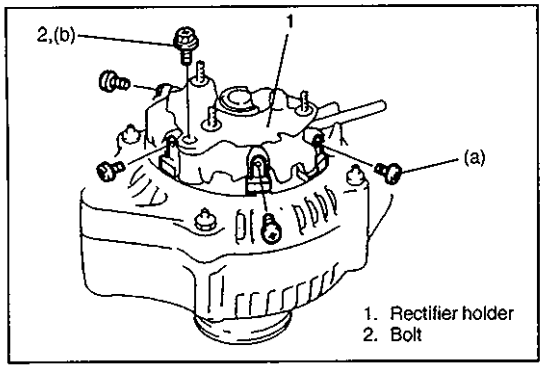

10) Install rectifier holder.

CAUTION:
When installing rectifier, check to confirm that stator leads have enough clearance with cooling fan blades.

Tightening Torque
(a): 2.0 N·m (0.2 kg-m, 1.5 lb-ft)
(b): 4.0 N·m (0.4 kg-m, 3.0 lb-ft)

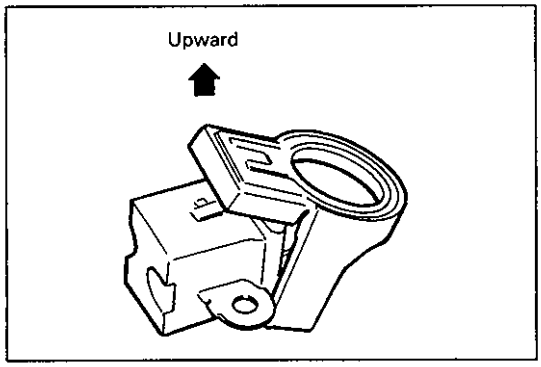

11) Install brush holder cover to brush holder.

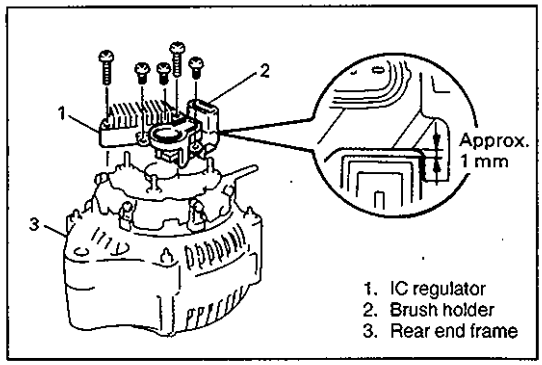

12) Place the IC regulator together with the brush holder horizontally on the rear end frame.
13) Install the 5 screws until there is a clearance of approx. 1 mm (0.04 in.) between the brush holder and connector.

Tightening Torque
2.0 N·m (0.2 kg-m, 1.5 lb-ft)

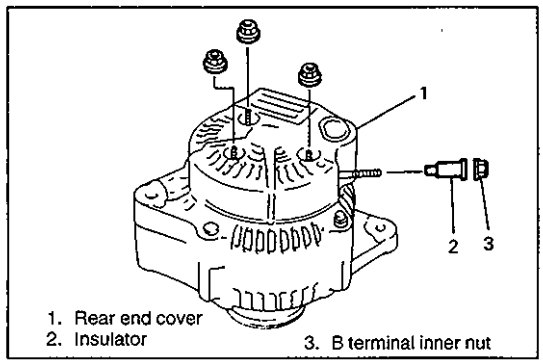

14) Install rear end cover.

Tightening Torque
4.5 N·m (0.45 kg-m, 3.5 lb-ft)

15) Install insulator and tighten B terminal inner nut to specified torque.

Tightening Torque
4.2 N·m (0.42 kg-m, 3.0 lb-ft)

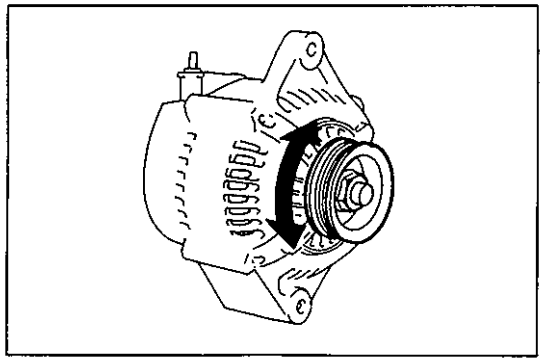

16) Make sure that rotor turns smoothly.

SPECIFICATIONS

BATTERY

55B24R TYPE

Rated capacity	36 AH/5HR, 12 Volts
Electrolyte	3.1 L (6.55/5.46 US/Imp pt)
Electrolyte S.G.	1.28 when fully charged at 20°C (68°F)

38B20R TYPE

Rated capacity	28 AH/5HR, 12 Volts
Electrolyte	2.1 L (4.44/3.70 US/Imp pt)
Electrolyte S.G.	1.28 when fully charged at 20°C (68°F)

GENERATOR

Rated voltage	12 V	Permissible ambient temperature	– 30 to 90 °C (– 22 to 194 °F)
Nominal output	60 A (at 13.5 V)		
Permissible max. speed	18,000 rpm	Polarity	Negative ground
No-load speed	1,150 rpm	Rotation	Clockwise viewed from pulley side
Setting voltage	13.6 to 14.4 V		

TIGHTENING TORQUE SPECIFICATIONS

Fastening	Tightening torque		
	N·m	kg-m	lb-ft
1. Body ground bolt	8	0.8	6.0
2. Generator mounting bolts	23	2.3	16.5
3. "B" terminal inner nut	4	0.4	3.0
4. "B" terminal outer nut	8	0.8	6.0
5. Pulley nut	111	11.1	80.5
6. Rear end frame nuts	4.5	0.45	3.5
7. Rear end cover nuts			
8. Negative rectifier fin bolt	4.0	0.4	3.0

SECTION 6K

EXHAUST SYSTEM

CONTENTS

GENERAL DESCRIPTION 6K-1
MAINTENANCE 6K-2
ON-VEHICLE SERVICE 6K-2

NOTE:
Whether following parts are used in the particular vehicle or not depends on specification. Be sure to bear this in mind when performing service work.
- **TWC (in exhaust center pipe)**

GENERAL DESCRIPTION

The exhaust system of this vehicle consists of the exhaust manifold, exhaust center pipe, muffler, seals, etc. The catalytic converter is an emission control device added to the exhaust system to lower the level of Hydrocarbon (HC), Carbon Monoxide (CO) and Oxides of Nitrogen (NOx) pollutants in the exhaust gas. The catalyst in the catalytic converter is of "Three way" type.

CAUTION:
Be sure to use UNLEADED FUEL for the catalytic converter equipped vehicle. Use of LEADED FUEL will affect performance of the catalytic converter adversely to a great extent.

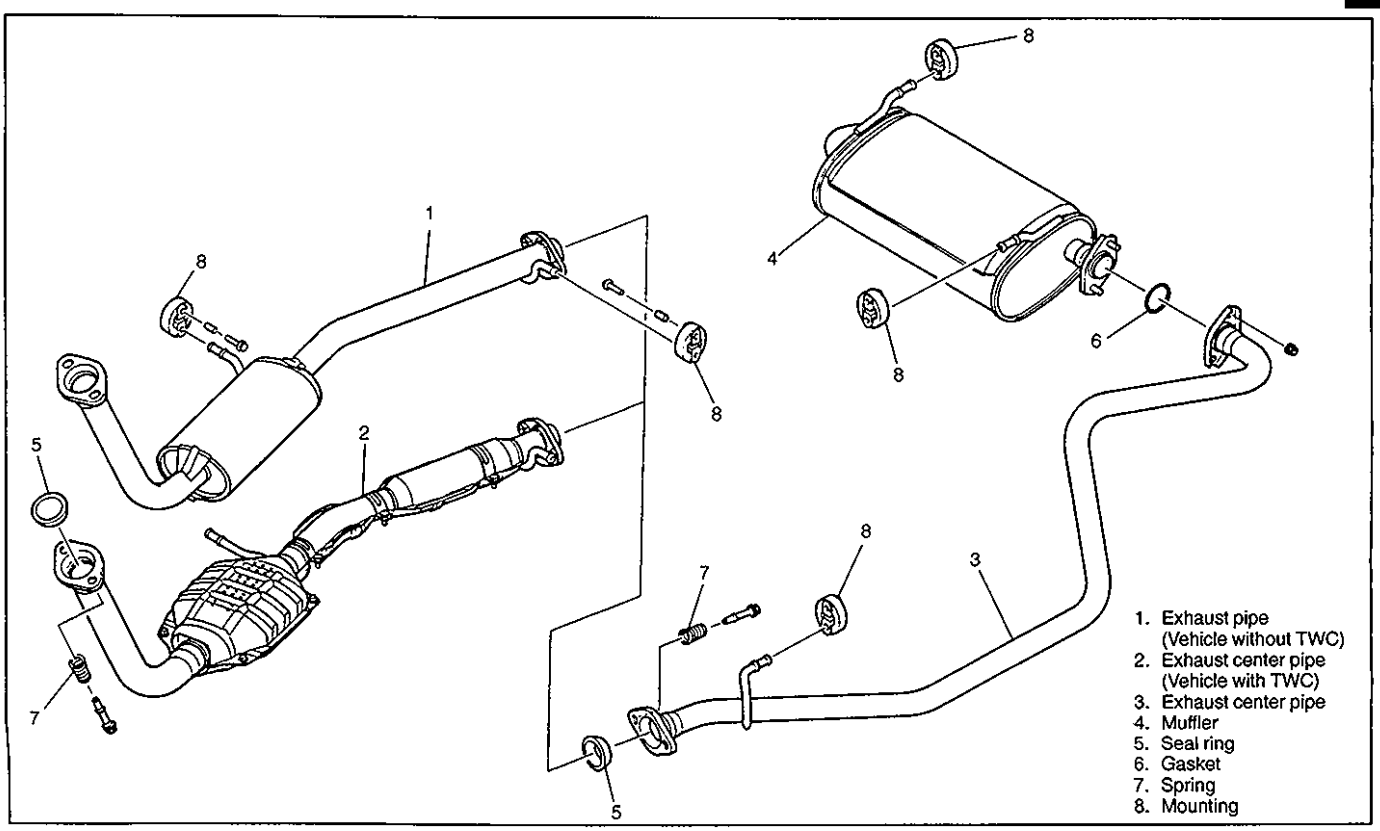

MAINTENANCE

WARNING:
To avoid danger of being borned, do not touh exhaust system when system is hot.
Any service on exhaust system should be performed when system is cool.

At every interval of periodic maintenance service, and when vehicle is raised for other service, check exhaust system as follows:

- Check rubber mountings for damage, deterioration and out of position.
- Check exhaust system for leakage, loose connection, dent and damage.
  If bolts or nuts are loosened, tighten them to specified torque. Refer to "ON VEHICLE SERVICE" for torque data.
- Check nearby body areas for damaged, missing, or mispositioned part, open seam, hole, loose connection or any other defect which could permit exhaust fumes to seep into vehicle.
- Make sure that exhaust system components have enough clearance from underbody to avoid overheating and possible damage to passenger compartment carpet.
- Any defect should be fixed at once.

ON-VEHICLE SERVICE

- Refer to Section 6A for removal and installation procedures of exhaust manifold.
- For replacement of exhaust center pipe, muffler or any part used to mount or connect them, be sure to hoist vehicle and observe WARNING given at the left of this page.

CAUTION
As exhaust center pipe has three way catalytic converter in it, it should not be exposed to any impulse. Be careful not to drop it or hit it against something.

- When exhaust manifold is removed, check seals for deterioration or damage.
- Tighten bolts and nuts to specified torques when reassembling. Refer to figure below for location of bolts and nuts.

Tightening Torque
(a): 50 N·m (5.0 kg-m, 36.5 lb-ft)
(b): 60 N·m (6.0 kg-m, 43.5 lb-ft)

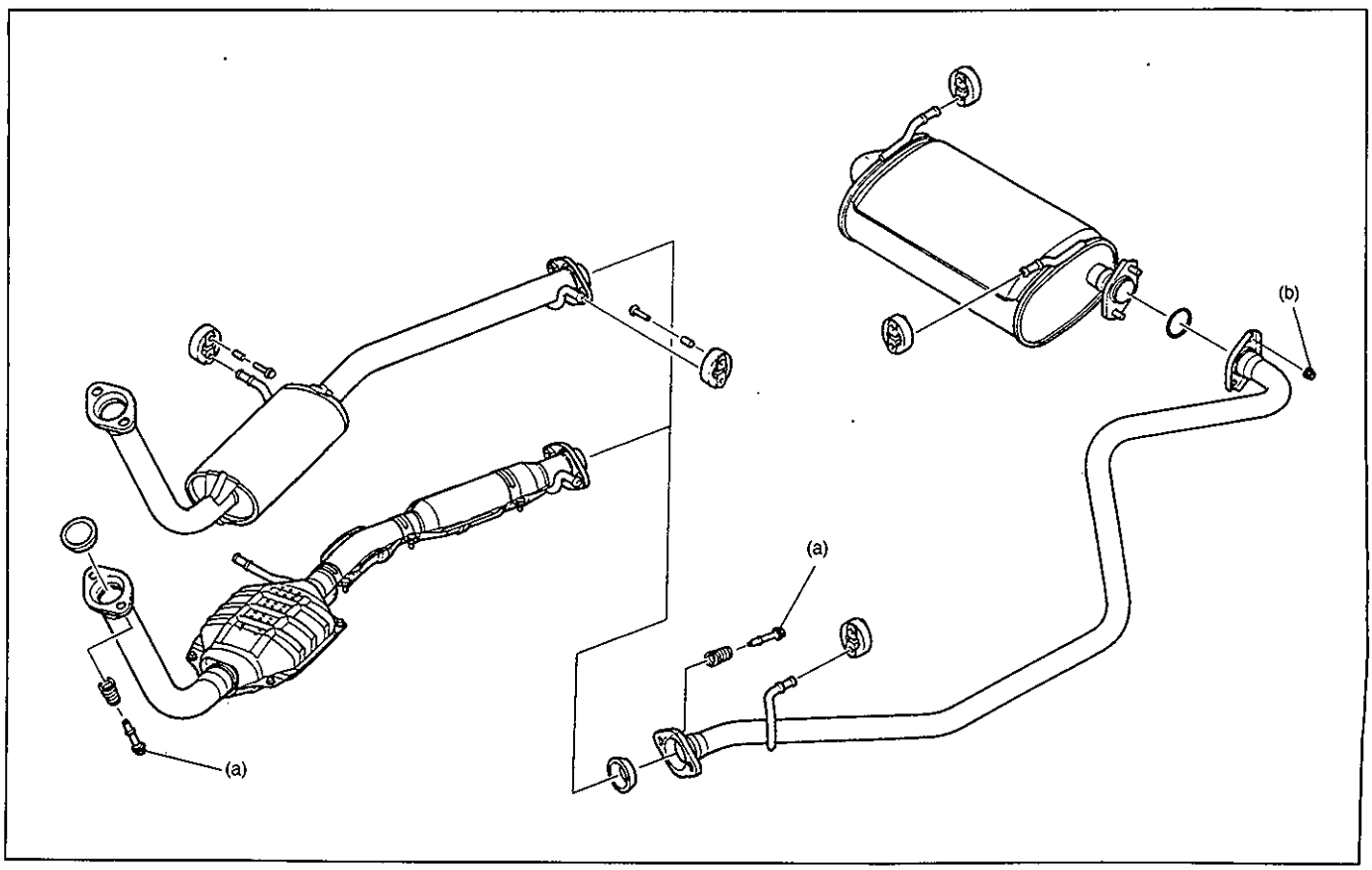

SECTION 7A

MANUAL TRANSMISSION

CONTENTS

GENERAL DESCRIPTION 7A- 2

ON-VEHICLE SERVICE 7A- 4
- Maintenance Service 7A- 4
- Rear gear shift control 7A- 5

UNIT REPAIR OVERHAUL 7A- 7
- Dismounting of Transmission 7A- 7
- Remounting 7A- 8
- Disassembling Unit 7A- 8
  - Front gear shift control 7A- 8
  - Extension case 7A- 8
  - Transmission case 7A- 9
  - Countershaft 7A- 9
  - Input shaft and main shaft 7A-10
  - Shift shafts and forks 7A-12
- Inspection 7A-13
- Assembling Unit 7A-16
  - Main shaft and input shaft 7A-16
  - Countershaft and reverse idle gear 7A-20
  - Shift shafts and forks 7A-21
  - Transmission lower case and upper case 7A-23
  - Extension case 7A-24
  - Input shaft bearing retainer 7A-25
  - Clutch release bearing 7A-25
  - Input shaft 7A-25
  - Front gear shift control 7A-26

TIGHTENING TORQUE SPECIFICATIONS 7A-27

REQUIRED SERVICE MATERIALS 7A-27

SPECIAL TOOLS 7A-28

GENERAL DESCRIPTION

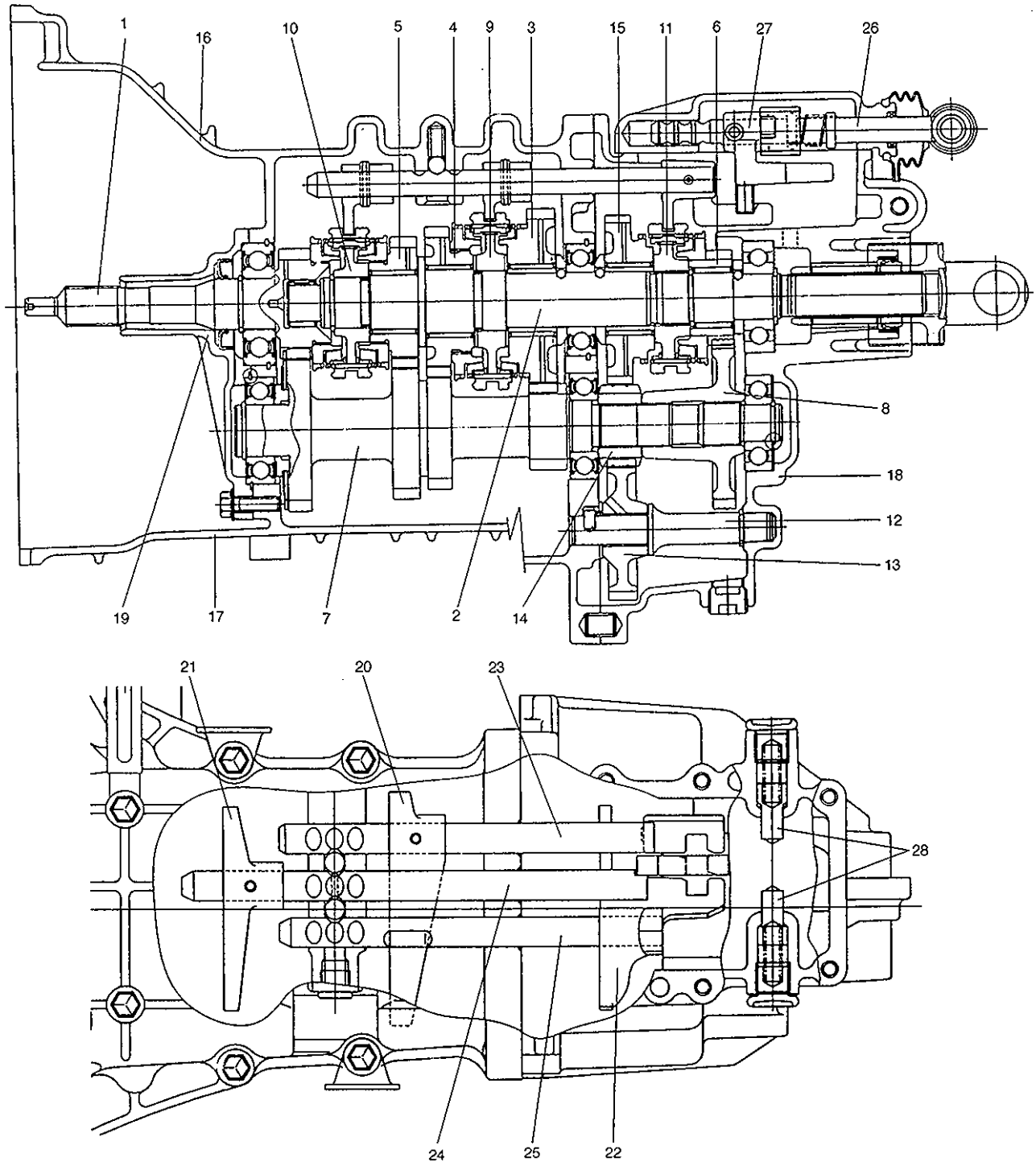

1. Input shaft
2. Main shaft
3. Main shaft low gear
4. Main shaft 2nd gear
5. Main shaft 3rd gear
6. Main shaft 5th gear
7. Countershaft
8. Countershaft 5th gear
9. Low speed synchronizer hub
10. High speed synchronizer hub
11. Reverse synchronizer hub
12. Reverse gear shaft
13. Reverse idle gear
14. Countershaft reverse gear
15. Main shaft reverse gear
16. Upper case
17. Lower case
18. Extension case
19. Input shaft bearing retainer
20. Low speed gear shift fork
21. High speed gear shift fork
22. Reverse gear shift fork
23. Low speed gear shift shaft
24. High speed gear shift shaft
25. Reverse gear shift shaft
26. Gear shift front shaft
27. Gear shift front arm
28. Select guide pin

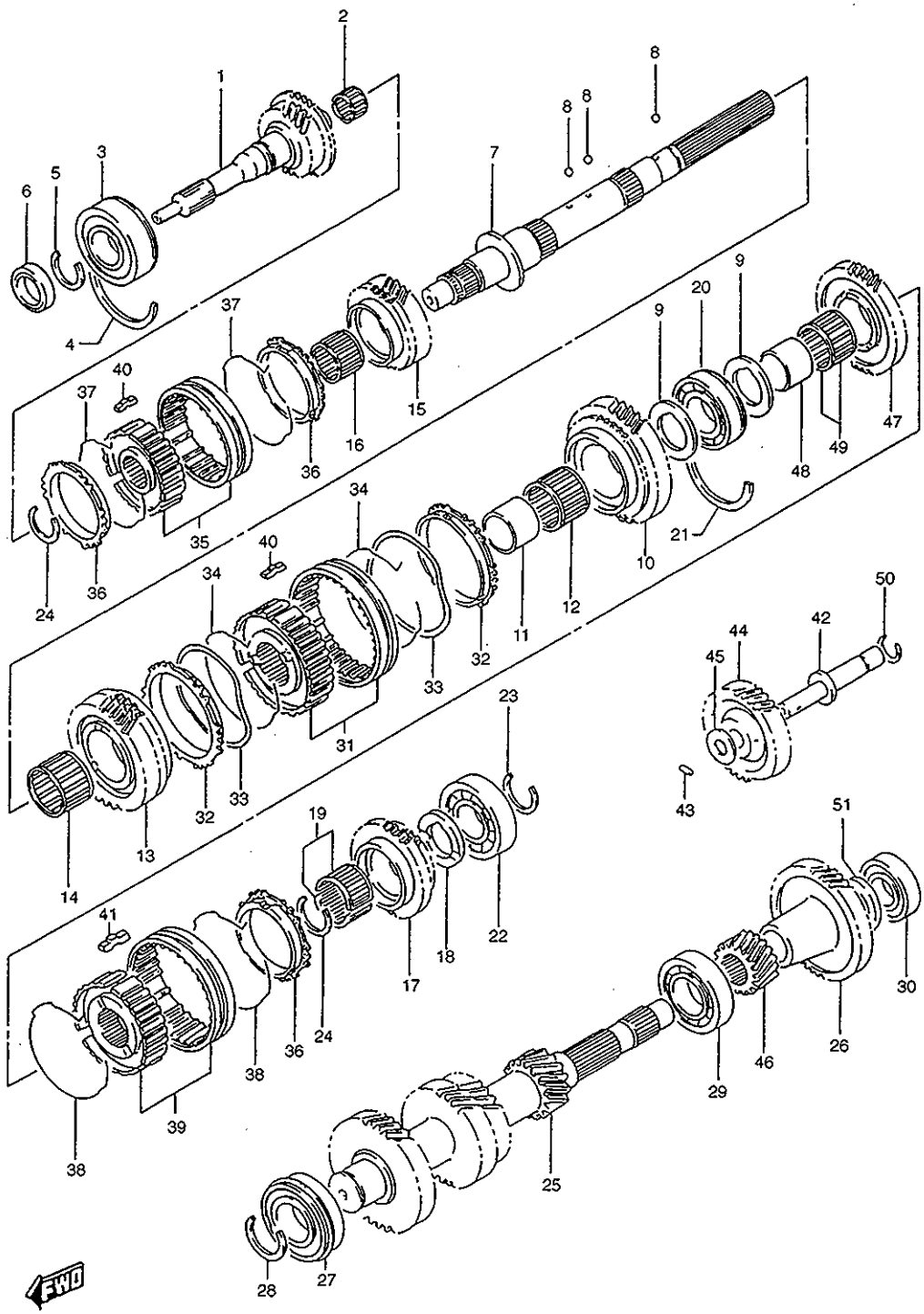

1. Input shaft
2. Input shaft bearing
3. Front bearing
4. C-ring
5. Circlip
6. Oil seal
7. Main shaft
8. Main shaft washer ball
9. Main shaft bearing washer
10. Low gear
11. Gear bush
12. Needle bearing
13. 2nd gear
14. Needle bearing
15. 3rd gear
16. 3rd gear needle bearing
17. 5th gear
18. 5th gear washer
19. 5th gear needle bearing
20. Main shaft bearing
21. C-ring
22. Main shaft rear bearing
23. Circlip
24. Circlip
25. Countershaft
26. Countershaft 5th gear
27. Front bearing
28. Circlip
29. Center bearing
30. Rear bearing
31. Low speed synchronizer hub ass'y
32. Low speed synchronizer ring
33. Low speed synchronizer spring
34. Synchronizer spring
35. High speed synchronizer hub ass'y
36. High speed synchronizer ring
37. Synchronizer spring
38. Synchronizer spring
39. Reverse synchronizer hub ass'y
40. Synchronizer key
41. Synchronizer key
42. Reverse gear shaft
43. Pin
44. Reverse idle gear
45. Washer
46. Countershaft reverse gear
47. Main shaft reverse gear
48. Gear bush
49. Needle bearing
50. Snap ring
51. Washer

ON-VEHICLE SERVICE

MAINTENANCE SERVICE

OIL CHANGE

1) Before changing or inspecting oil, be sure to stop engine and lift vehicle horizontally.
2) With vehicle lifted up, check oil level and leakage. If leakage exists, correct or repair it.

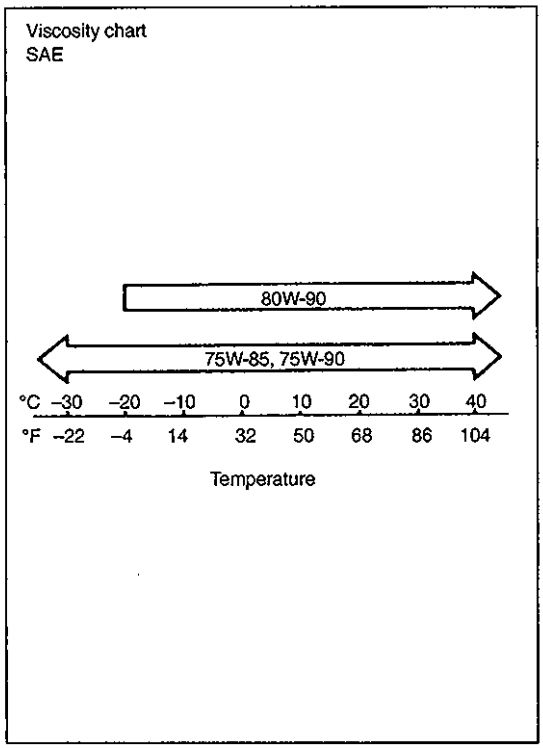

3) Drain old oil and fill new specified oil as shown below by specified amount (roughly up to level hole).
NOTE:
- **It is highly recommended to use SAE 75W–90 gear oil.**
- **Whenever vehicle is hoisted for any service work other than oil change, also be sure to check for oil leakage.**
- **If water or rust is mixed in drained oil, be sure to check boot of transmission.**

Gear Oil Specification
Oil grade: API GL-4
Viscosity: SAE 75W–85, 75W–90 or 80W–90

Oil Capacity:
Transmission 1.3 liters (2.75/2.29 US/Imp. pt)

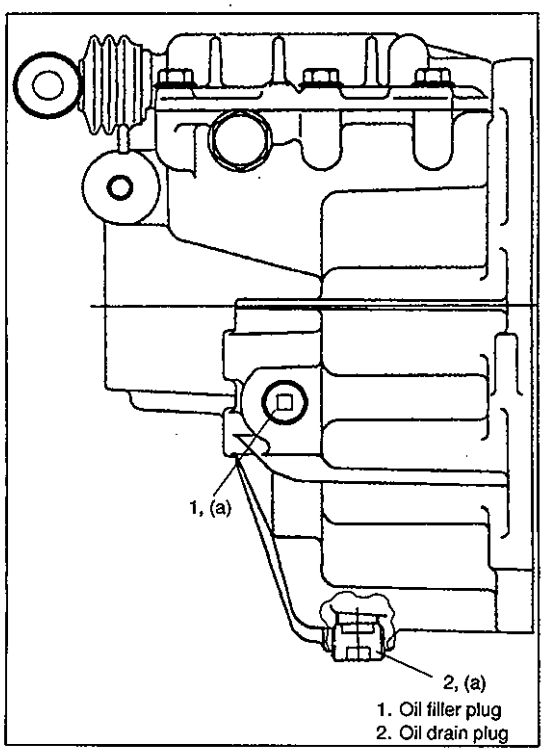

4) Torque drain plug and level/filler plug as specified below after applying sealant to its thread.

CAUTION:
Transmission oil must not be poured through gear shift control lever part.

Sealant 99000-31110

Tightening Torque
(a): 23 N·m (2.3 kg-m, 17.0 lb-ft)

REAR GEAR SHIFT CONTROL

1. Gear shift knob
2. Gear shift lever
3. Gear shift lever boot ass'y
4. Gear shift lever boot No.2
5. Gear shift lever boot No.3
6. Gear shift lever boot cover
7. Gear shift lever plate
8. Gear shift control lower seat
9. Gear control select bolt
10. Gear shift lever case
11. Gear shift rear shaft
12. Extension rod

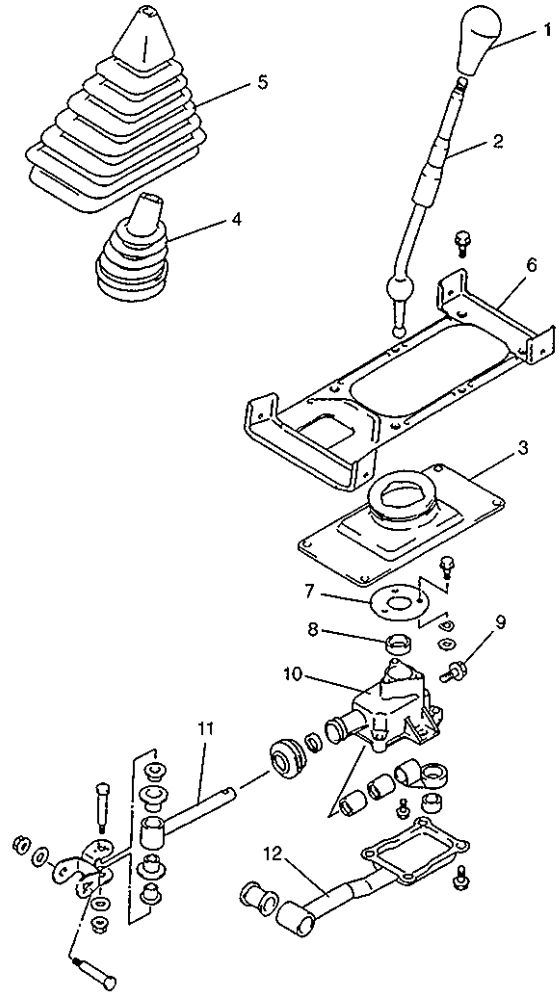

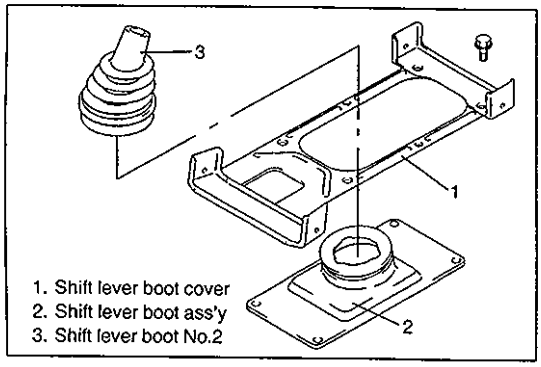

1. Shift lever boot cover
2. Shift lever boot ass'y
3. Shift lever boot No.2

REMOVAL

1) Remove shift knob and remove center console box with shift lever boot No.3.
2) Pull out shift lever boot No.2 and remove shift lever boot cover and shift lever boot ass'y.

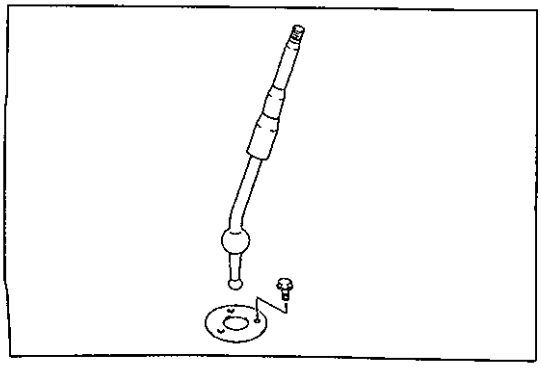

3) Remove 3 bolts, and then remove shift lever case plate shim, spring and shift lever.

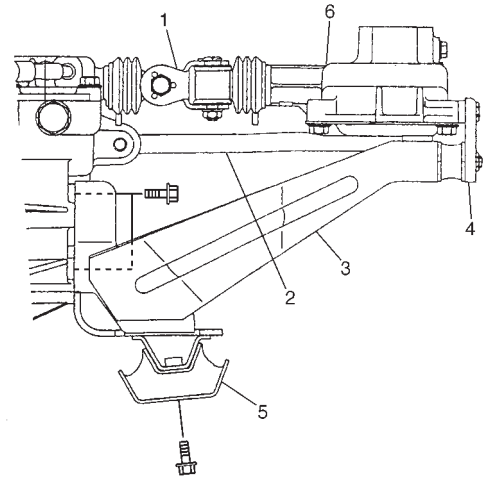

1. Gear shift control joint
2. Extension rod
3. Rear mounting bracket
4. Gear shift case mounting bracket
5. Engine rear mounting
6. Rear gear shift control assembly

4) Hoist vehicle and drain transmission oil.
5) Remove exhaust No.1 pipe, refer to Section 6K.
6) Remove propeller shaft No.1 (and No.2, if equipped for 4WD), refer to Section 4B.
7) Remove gear shift control joint bolt and extension rod bolt.
8) Apply transmission jack and remove rear mounting bracket with gear shift case mounting bracket and engine rear mounting.
9) Remove rear gear shift control assembly.

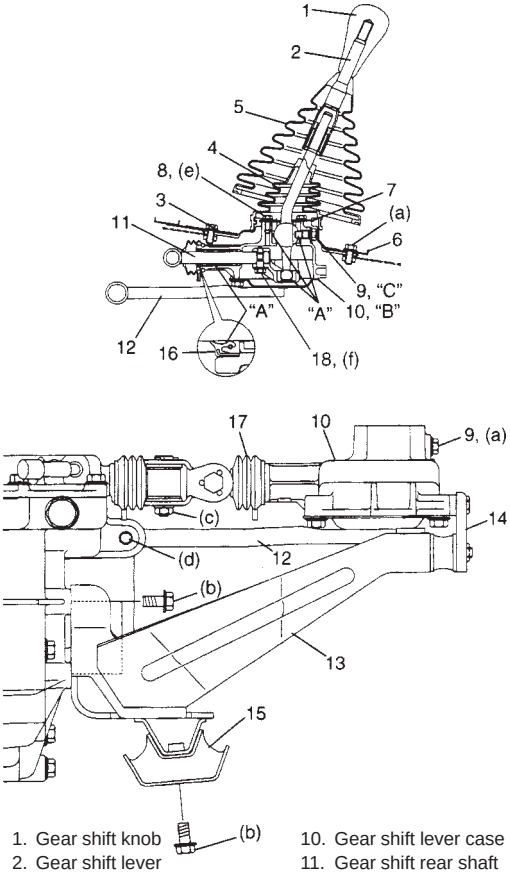

1. Gear shift knob
2. Gear shift lever
3. Gear shift lever boot ass'y
4. Gear shift lever boot No.2
5. Gear shift lever boot No.3
6. Gear shift lever boot cover
7. Gear shift lever plate
8. Gear shift control lower seat bolt
9. Gear control select bolt
10. Gear shift lever case
11. Gear shift rear shaft
12. Extension rod
13. Rear mounting bracket
14. Gear shift case mounting bracket
15. Engine rear mounting
16. Oil seal
17. Boot
18. Gear shift rear arm bolt

INSPECTION

- Check that gear shift control lever moves smoothly without abnormal noise.
- Check bushes and boot for damage and deterioration.

INSTALLATION

Install in reverse order of removal procedure noting following points.

"A": Grease 99000-25010
"B": Sealant 99000-31110
"C": Thread lock 99000-32020

- Press fit oil seal, referring to figure for installing direction.
- Make breather of boot face downward as shown in figure.
- Torque bolts to specifications, as given below.

Tightening Torque
(a): 23 N·m (2.3 kg-m, 17.0 lb-ft)
(b): 25 N·m (2.5 kg-m, 18.0 lb-ft)
(c): 18 N·m (1.8 kg-m, 13.0 lb-ft)
(d): 50 N·m (5.0 kg-m, 36.5 lb-ft)
(e): 5.5 N·m (0.55 kg-m, 4.0 lb-ft)
(f): 18 N·m (1.8 kg-m, 13.0 lb-ft) (For 6 mm bolt)
34 N·m (3.4 kg-m, 24.5 lb-ft) (For 8 mm bolt)

NOTE:
Do not reuse for gear shift rear arm bolt whose size is 6 mm.

- When installing propeller shaft(s), refer to Section 4B.
- When installing exhaust No.1 pipe, refer to Section 6K.
- After connect clutch cable, adjust clutch pedal free travel, refer to Section 7C.

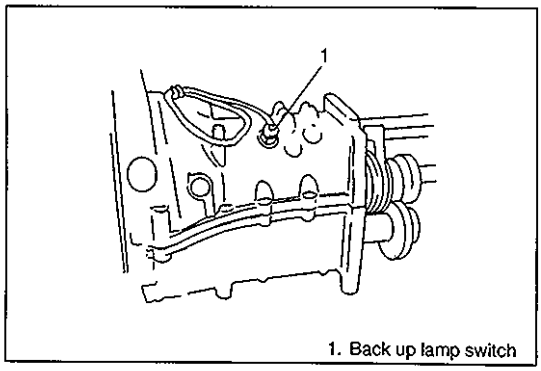

1. Back up lamp switch

UNIT REPAIR OVERHAUL

DISMOUNTING OF TRANSMISSION

1) Disconnect negative cable at battery.
2) Remove shift lever and rear gear shift control assembly, refer to steps 1) to 9) of REAR GEAR SHIFT CONTROL REMOVAL in this section.
3) Disconnect back up lamp switch lead wire at coupler respectively.
4) Remove starting motor from transmission case, refer to STARTING MOTOR REMOVAL of Section 6G.

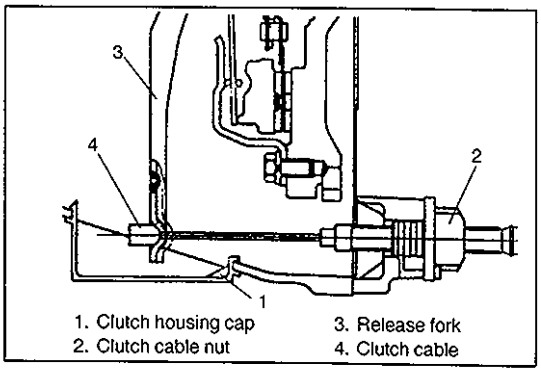

1. Clutch housing cap
2. Clutch cable nut
3. Release fork
4. Clutch cable

5) Remove clutch housing cap and disconnect clutch cable from clutch release fork.

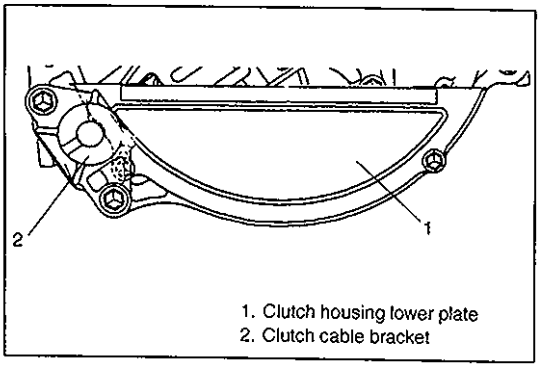

1. Clutch housing lower plate
2. Clutch cable bracket

6) Remove clutch cable bracket and remove clutch housing lower plate from transmission case.

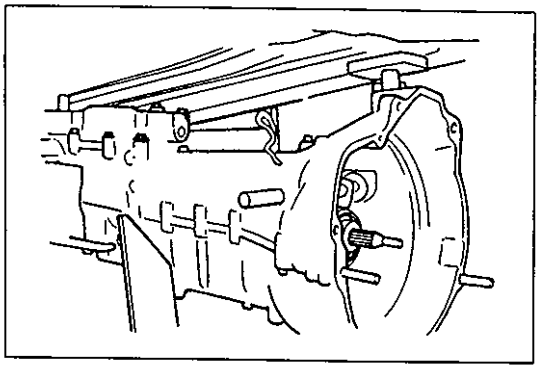

7) Remove bolts and nuts fastening engine cylinder block and transmission case and separate transmission from engine.
8) Remove clutch cover, disc and flywheel, refer to Section 7C.
9) Take down transmission.

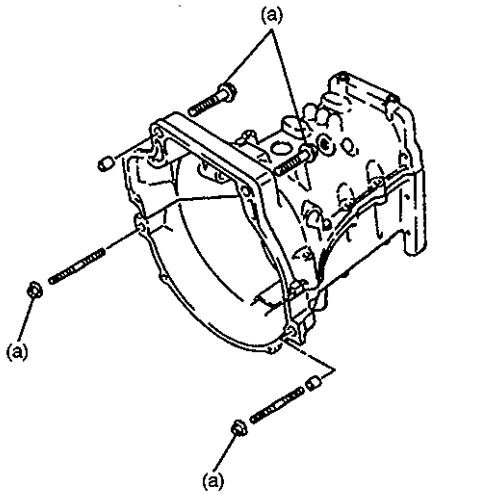

REMOUNTING

For remounting, reverse dismounting procedure.

- When installing flywheel, clutch cover and disc, refer to Section 7C.
  Use specified torques as given below.

  Tightening Torque
  (a): 61 N·m (6.1 kg-m, 44.5 lb-ft)

- For tightening torques not mentioned above, refer to TIGHTENING TORQUE SPECIFICATION at the end of this section.
- Connecting clutch cable, refer to Section 7C in this manual for details.
- When installing starting motor, refer to Section 6G in this manual for details.
- When installing rear gear shift control assembly and shift lever, refer to REAR GEAR SHIFT CONTROL INSTALLATION in this section.
- Fill transmission oil according to MAINTENANCE SERVICE in this section.

DISASSEMBLING UNIT

FRONT GEAR SHIFT CONTROL

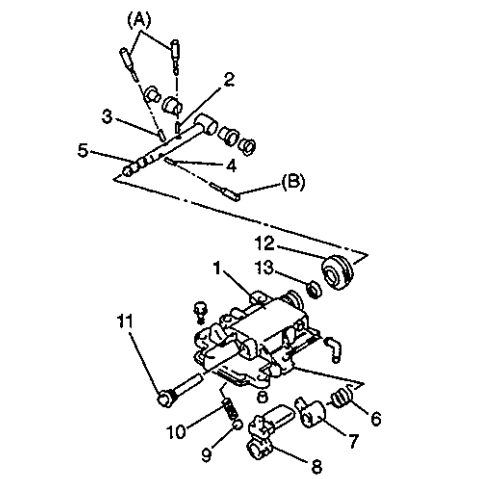

1. Gear shift lever front case
2. Shift limit spring pin
3. Shift limit yoke pin
4. Shift front arm pin
5. Gear shift shaft
6. Limit spring
7. Limit yoke
8. Shift front arm
9. Ball
10. Spring
11. Reverse gear shift limit bolt
12. Boot
13. Oil seal

1) Remove gear shift lever front case.
2) Remove reverse gear shift limit bolt.
3) Remove shift front arm pin, shift limit spring pin and shift limit yoke pin by using special tools.

   Special Tool
   (A): 09922-85811
   (B): 09925-78210

4) Pull out gear shift shaft, and then remove limit spring, limit yoke and shift front arm.

   NOTE:
   Ball and spring will jump out when disconnecting gear shift shaft.

5) Remove boot and oil seal.

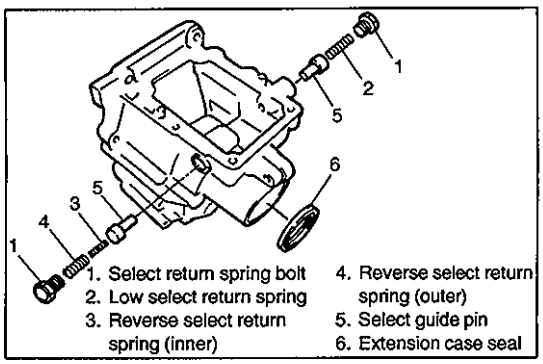

1. Select return spring bolt
2. Low select return spring
3. Reverse select return spring (inner)
4. Reverse select return spring (outer)
5. Select guide pin
6. Extension case seal

EXTENSION CASE

1) Remove select return spring bolts, return springs and select guide pins.
2) Remove bolts securing extension case to transmission case, and then take off extension case.
3) Remove extension case seal as necessary.

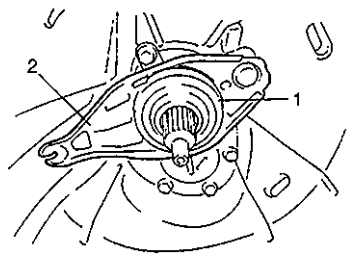

1. Clutch release bearing
2. Release fork

TRANSMISSION CASE

1) Remove clutch release bearing and release fork.
2) Remove input shaft bearing retainer bolts and pull out retainer.
3) Take out oil seal from input shaft bearing retainer as necessary.

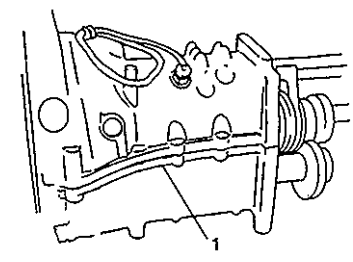

1. Pry point
2. Main shaft ass'y

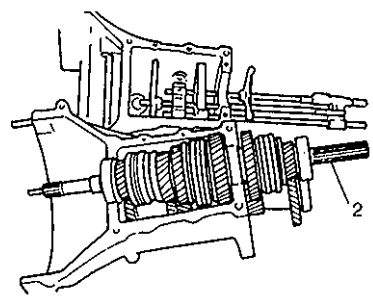

4) Remove bolts fastening upper and lower cases together, separate the two, and take out main shaft assembly.
   Using a screwdriver or the like can be used to pry two cases apart, as shown. In such a case, do not stick screwdriver too far into between two mating faces, or faces may get damaged.

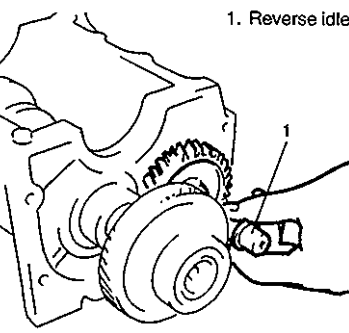

COUNTERSHAFT

1) Remove reverse idle gear shaft with gear.

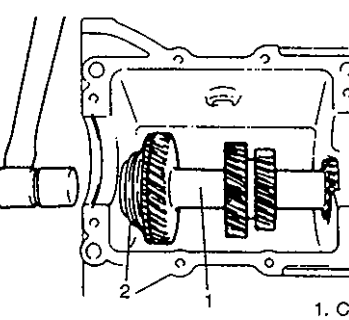

2) Remove outside circlip of countershaft front bearing.
3) Using plastic hammer, drive countershaft rearward.

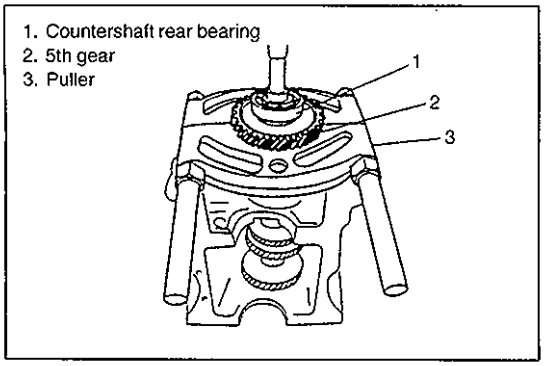

4) Remove countershaft rear bearing and 5th gear with puller and press.

NOTE:
Be sure to set flat face of puller against 5th gear so as not to cause damage to teeth.

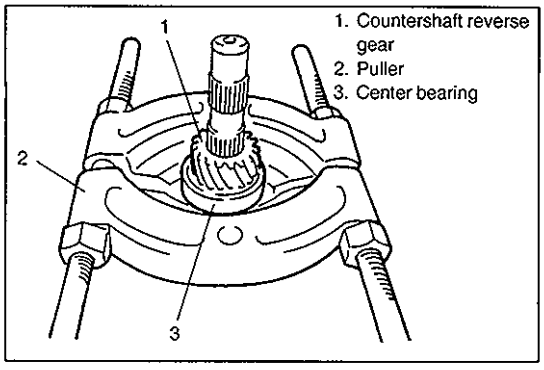

5) Remove countershaft reverse gear and center bearing with puller and press.
6) Remove countershaft from lower case.

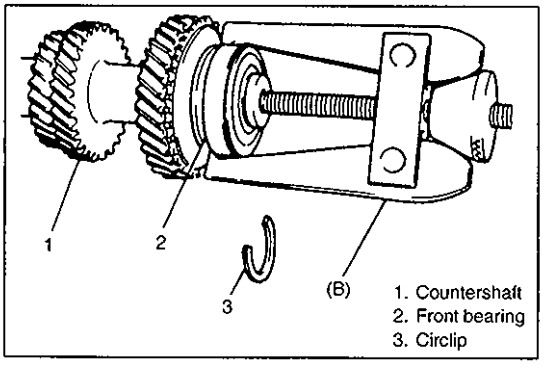

7) Remove circlip of countershaft front bearing and pull out bearing by using special tool.

Special Tool
(B): 09913-60910

INPUT SHAFT AND MAIN SHAFT

1) Take out input shaft by hand, taking care not to let high-speed synchronizer ring fall off.

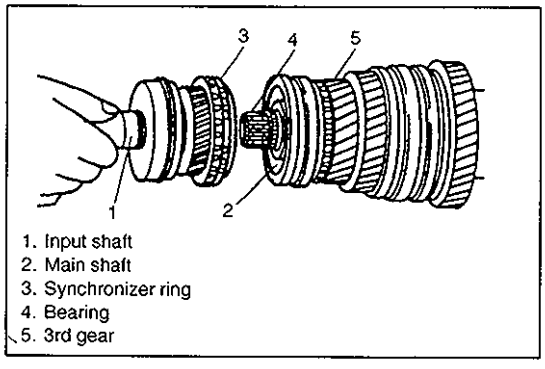

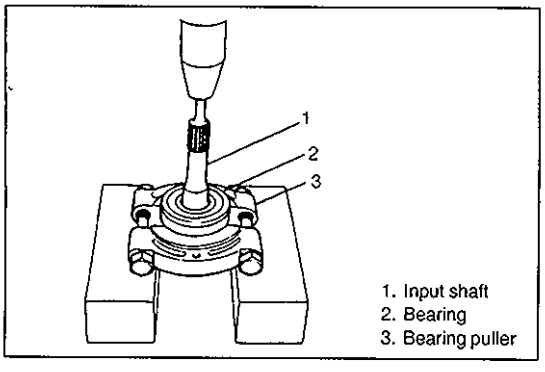

2) Remove circlip of input shaft and pull out bearing with puller and press as necessary.

NOTE:
Sealed bearing must not be washed. Replace it with new one when required.

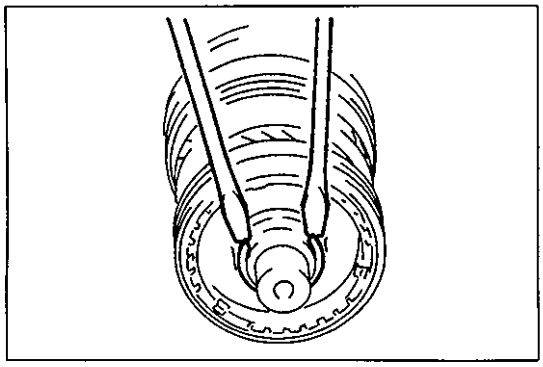

3) Remove circlip retaining hub of high-speed synchronizer sleeve, and slide off sleeve hub, third driven gear and needle bearing from main shaft.

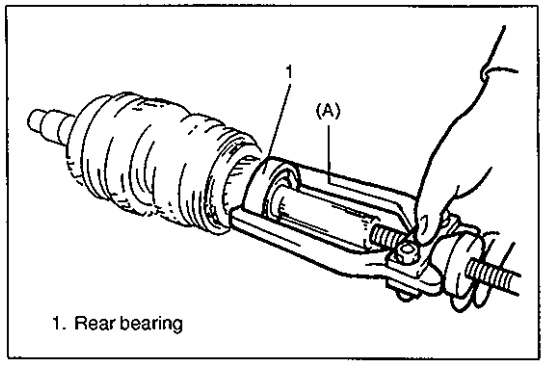

1. Rear bearing

4) Remove circlip retaining rear bearing on main shaft. Remove main shaft bearing using special tool.

Special Tool:
(A): 09913-65135

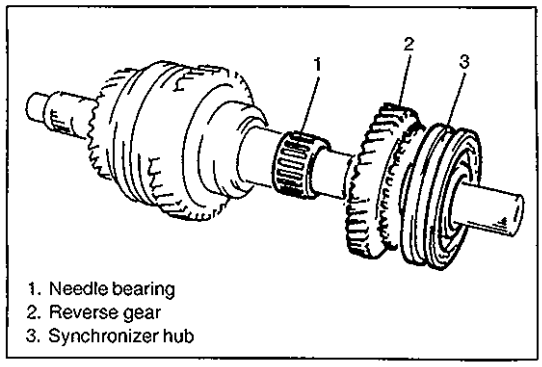

1. Needle bearing
2. Reverse gear
3. Synchronizer hub

5) From main shaft, take off 5th gear washer, ball, 5th gear, 5th speed synchronizer ring and 5th gear needle bearing.
6) Remove circlip retaining the reverse synchronizer hub on main shaft.
7) Remove reverse synchronizer hub, reverse gear and reverse gear needle bearing.

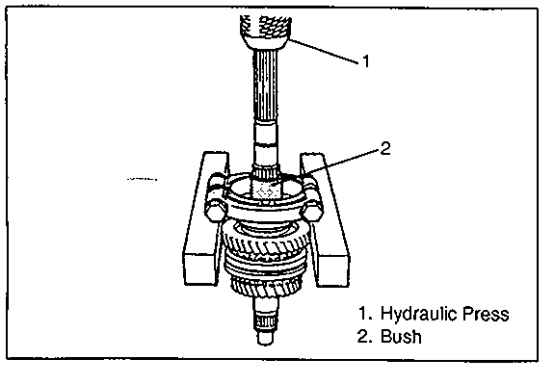

1. Hydraulic Press
2. Bush

8) Remove bearing washer and reverse gear bush on main shaft by using hydraulic press.

NOTE:
During this removal, watch out for a ball which may fall off. It must not be lost. Also, ball bearing should not be removed together with above washer and bush.

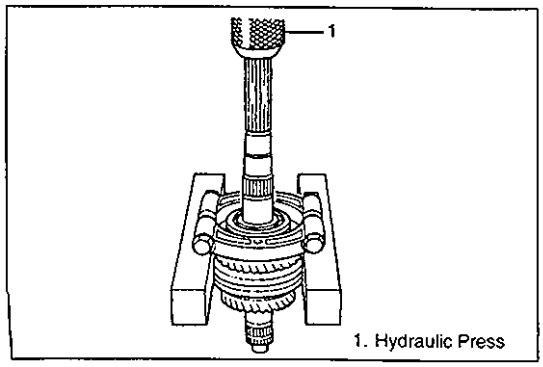

1. Hydraulic Press

9) Remove ball and main shaft (center) bearing by using hydraulic press.

NOTE:
In the state as shown, there is a ball in washer which is located under bearing. Be sure to prevent it from falling off and getting lost.

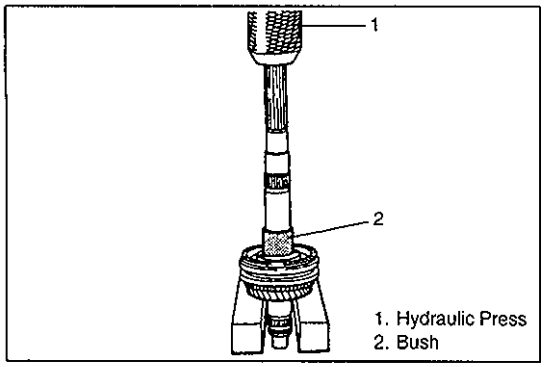

1. Hydraulic Press
2. Bush

10) Remove bearing washer, ball, low gear, low synchronizer ring, needle bearing and low gear bush on main shaft.
11) Remove low speed synchronizer sleeve and hub assembly, 2nd gear and 2nd synchronizer ring all together by using hydraulic press.

NOTE:
If bush can't be pulled out by hand at step 9), pull off sleeve and hub together by using press.

12) Remove sleeve from hub and then take off synchronizer keys and springs.

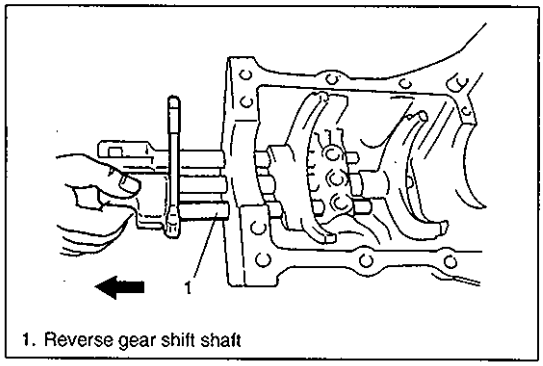

1. Reverse gear shift shaft

SHIFT SHAFTS AND FORKS

1) Pull out reverse gear shift shaft. As this shaft comes out, locating ball and spring will jump out of hole; do not let them fly away.

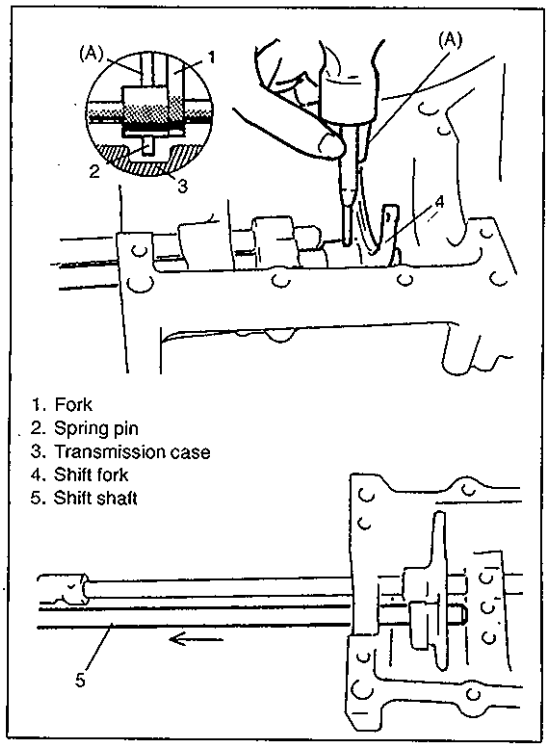

1. Fork
2. Spring pin
3. Transmission case
4. Shift fork
5. Shift shaft

2) Using special tool, drive out yoke pin on high speed gear shift fork, and pull out shift shaft.
As in above case, be careful not to let locating ball, interlock ball and spring fly away.

Special Tool
(A): 09922-85811

CAUTION:
When removing yoke pin, be sure not to drive it out so far as to contact case. Or it will cause damage to case.

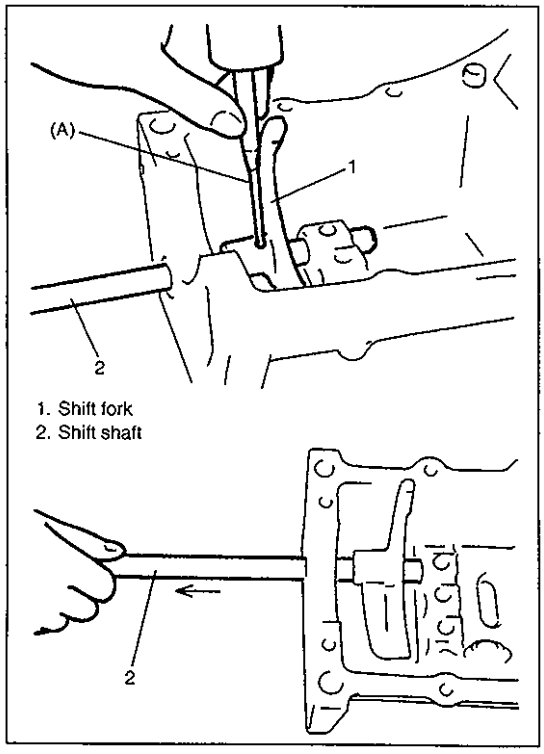

3) Drive yoke pin out of low speed gear shift fork as in above step 2) and pull out fork shaft and fork.

Special Tool
(A): 09922-85811

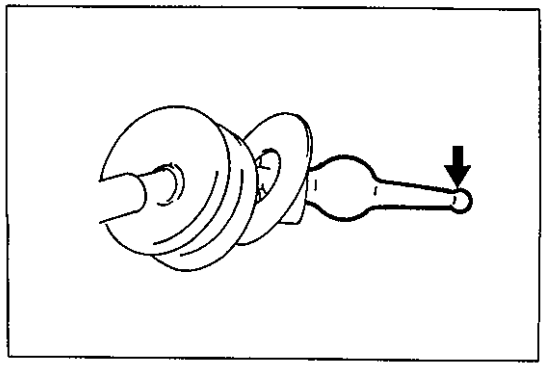

INSPECTION

Gear Shift Lever

Check lower end of gear shift lever where gear shift fork shaft contact for wear and any kind of damage. Worn or damaged gear shift lever must be replaced with a new one.

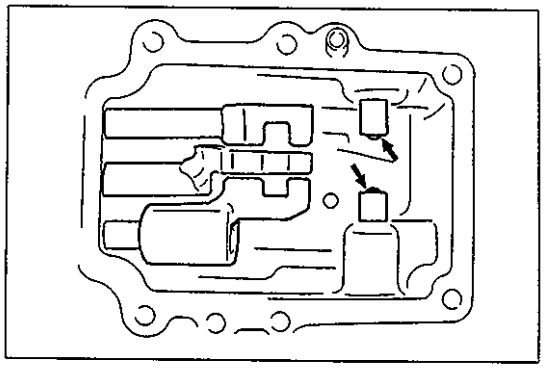

Reverse & Low Speed Select Guide Pins

Check both select guide pins where gear shift front arm contacts for stepped wear. Replace worn select guide pin.

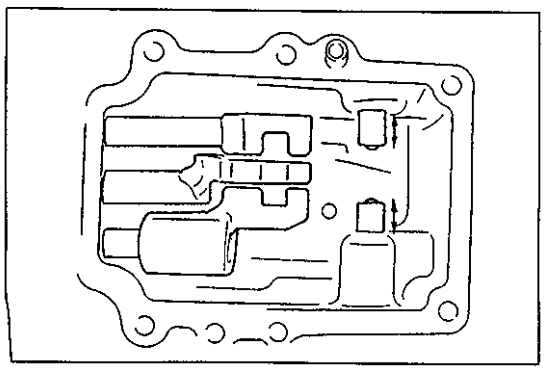

Move shaft and check low speed select guide pin for smooth movement without rattle. If found defective, replace it and apply grease to pin.

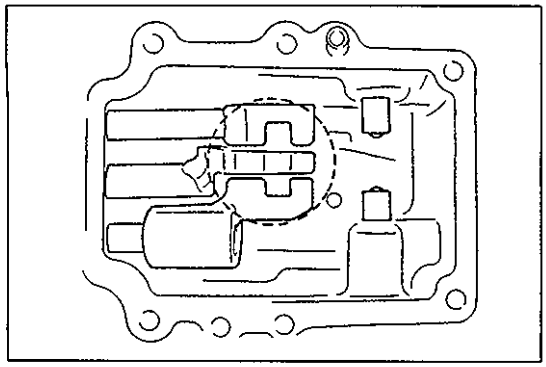

Gear Shift Fork Shaft

Visually check each gear shift fork shaft (High, Low and Reverse) where gear shift front arm contacts for wear. Worn shaft must be replaced.

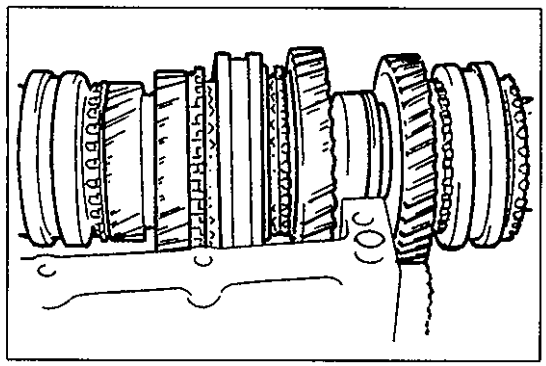

Gears

Check each part for wear, damage or discoloration. Replace if found defective.

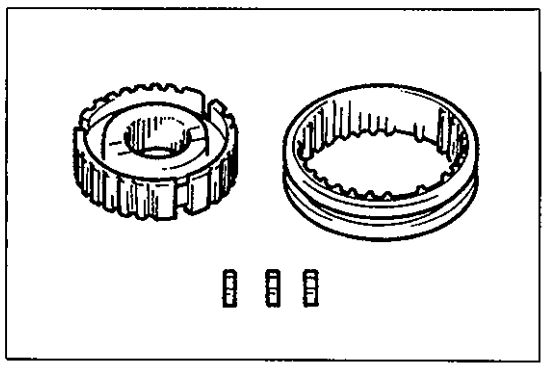

Synchronizer Hubs, Sleeves and Keys

Check each part for wear or damage. Replace if found defective.

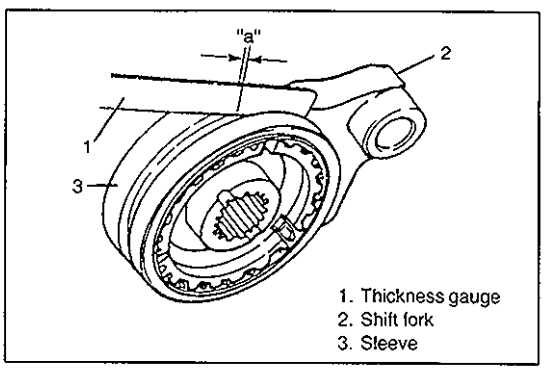

Shift Forks and Sleeves

Check contact surfaces for wear or damage.
Measure clearance between fork and sleeve.

Maximum clearance "a": 1.0 mm (0.039 in.)

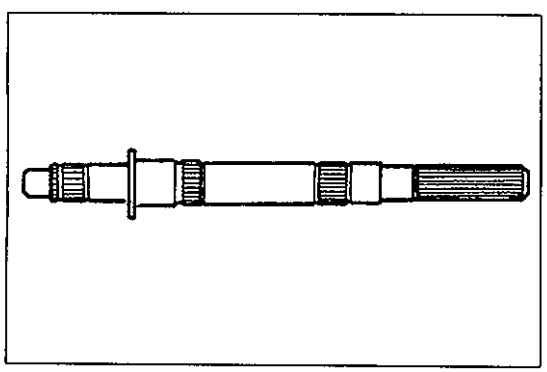

Main Shaft

Check each part of shaft for wear, discoloration or damage. Replace shaft if any part is found defective.

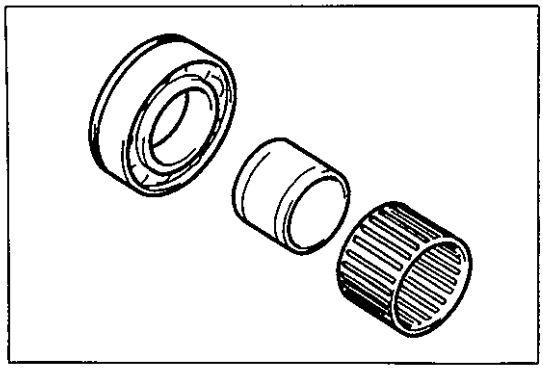

Bearings and Bushes

Check each part for wear, damage or discoloration. With ball bearing, check to ensure that it rotates smoothly and it does not make noise.
Replace if found defective.

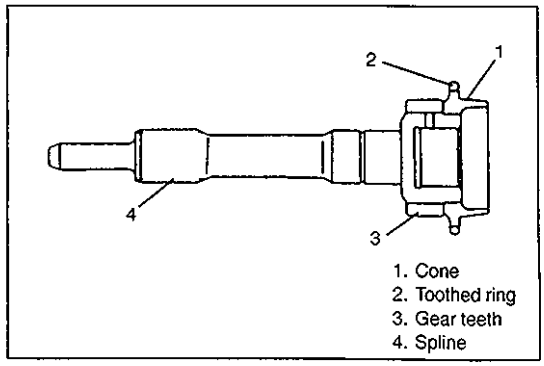

1. Cone
2. Toothed ring
3. Gear teeth
4. Spline

Input Shaft

Inspect cone and toothed ring for wear and damage.

Inspect gear teeth and splines for wear and damage.
If any part of input shaft inspected as above is found excessively worn or badly damaged, replace shaft.

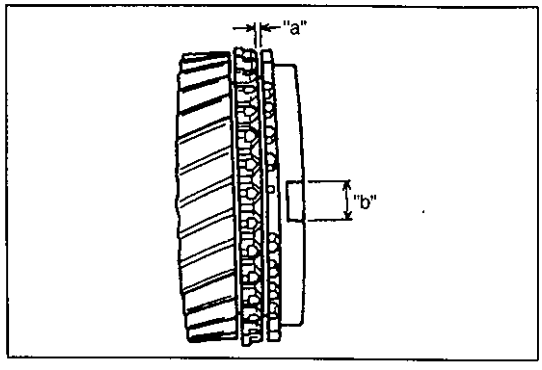

Combination of Gear and Synchronizer Ring

Check clearance "a" between synchronizer ring and gear, key slot width "b" in synchronizer ring and each chamfered tooth of gear and synchronizer ring and replace with new one, if necessary.
Also, check gear tooth.

Clearance "a": Standard 1.0 – 1.4 mm (0.039 – 0.055 in.)
Service limit 0.5 mm (0.019 in.)
Slot width "b": Standard 10.1 mm (0.397 in.)
Service limit 10.4 mm (0.409 in.)

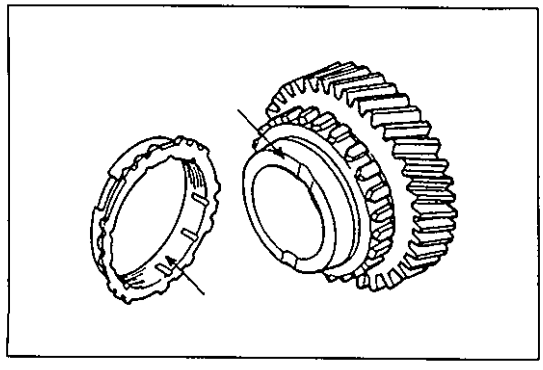

Inspect external cone (of gear) and internal cone (of ring) for abnormal wear. Be sure that contact patterns on these surfaces indicate uniform full-face contact, and that surfaces are free from any wavy wear. A badly worn member must be replaced.
Proper synchronizing action on gear shifting can be expected only when ring-to-gear clearance and condition of cone surfaces, among other things, are satisfactory.

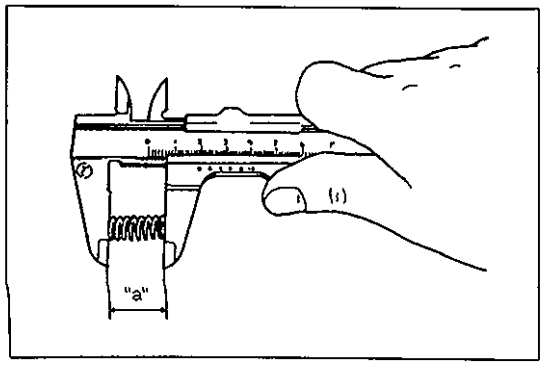

Fork Shaft Locating Springs

If "gears slipping out of mesh" has been complained, check these springs for strength by measuring their free length, and replace them if their free lengths are less than service limit.

Free length "a": Standard 25.5 mm (1.004 in.)
Service limit 21.0 mm (0.826 in.)

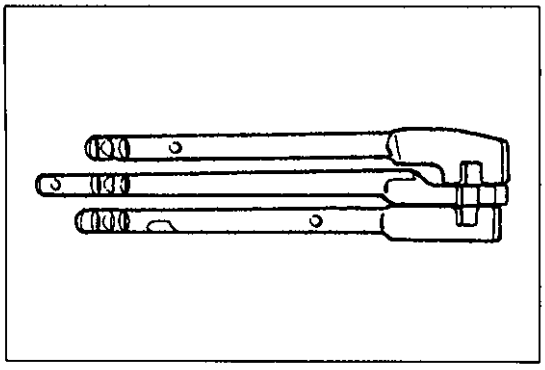

Gear Shift Shafts

Check the part of shaft as indicated in figure for uneven wear. Replace shaft if uneven wear is noted.

ASSEMBLING UNIT

NOTE:

- **Before installation, wash each part and apply specified gear oil to sliding faces of bearing and gear.**
- **Use new circlips on shaft for reinstallation. Don't reuse used circlips.**
- **Tighten each fastening bolt and nut according to specified torque data listed on the last page of this section.**

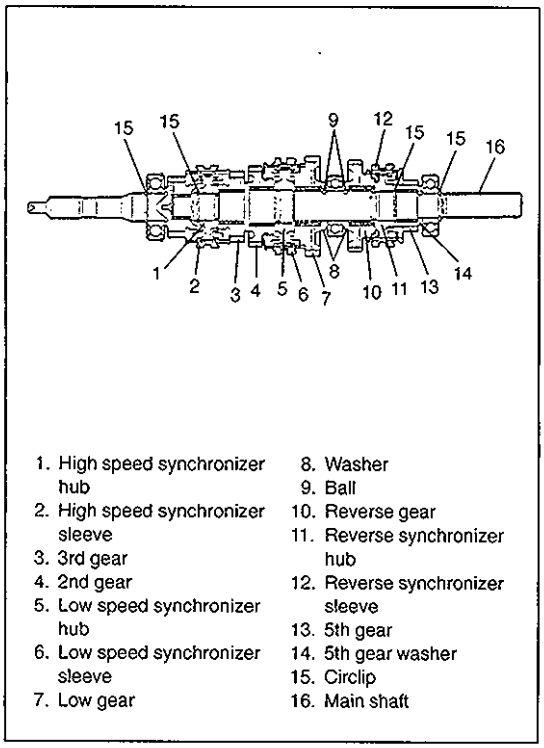

1. High speed synchronizer hub
2. High speed synchronizer sleeve
3. 3rd gear
4. 2nd gear
5. Low speed synchronizer hub
6. Low speed synchronizer sleeve
7. Low gear
8. Washer
9. Ball
10. Reverse gear
11. Reverse synchronizer hub
12. Reverse synchronizer sleeve
13. 5th gear
14. 5th gear washer
15. Circlip
16. Main shaft

MAIN SHAFT AND INPUT SHAFT

Install each parts by reversing respective removal procedures. Be careful for installing direction of each washer, gear, synchronizer hub and sleeve.

Refer to figure. Make sure to install each ball on main shaft.

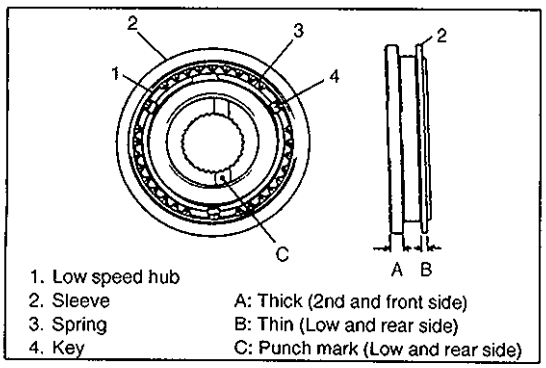

1. Low speed hub
2. Sleeve
3. Spring
4. Key

A: Thick (2nd and front side)
B: Thin (Low and rear side)
C: Punch mark (Low and rear side)

1) Fit sleeve to low speed hub, place 3 synchronizer keys in it and set synchronizer springs.
   Refer to figure for proper installing direction of hub, sleeve and springs. Synchronizer key has no specific direction for installation.

NOTE:

When installing each synchronizer spring, insert its hooked end to hub hole and put it toward right.

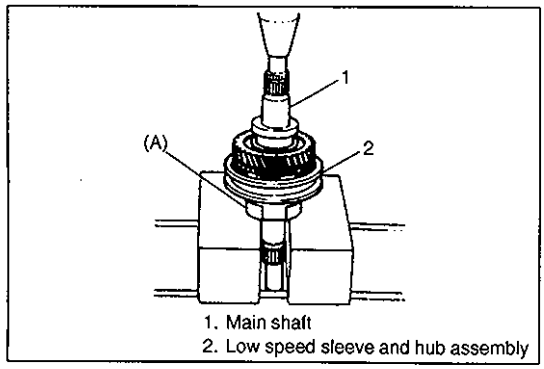

1. Main shaft
2. Low speed sleeve and hub assembly

2) Install needle bearing, 2nd gear and 2nd synchronizer ring to main shaft.
3) Press-fit sleeve and hub assembly onto main shaft with press.

Special Tool
(A): 09927-08210

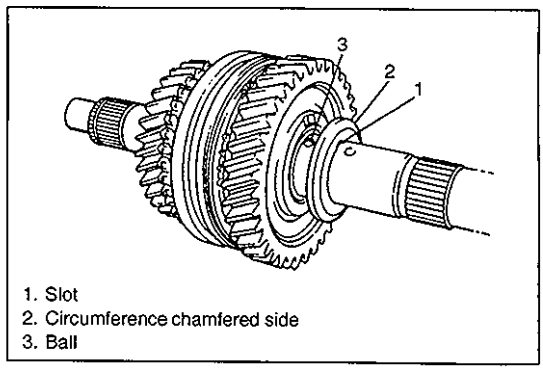

1. Slot
2. Circumference chamfered side
3. Ball

4) Install low gear bush, needle bearing, synchronizer ring, low gear, ball and washer onto main shaft.
Fit ball into hole in shaft and install washer so that its slot comes over ball.
To direct washer correctly, bring its circumference chamfered side to main shaft center bearing.

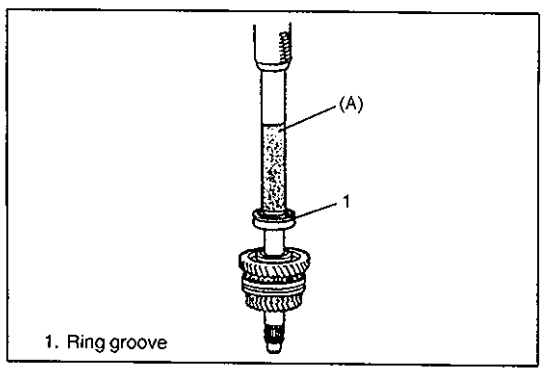

1. Ring groove

5) Press-fit center bearing with bearing installer (special tool) using care for its installing direction.

Special Tool
(A): 09925-18010

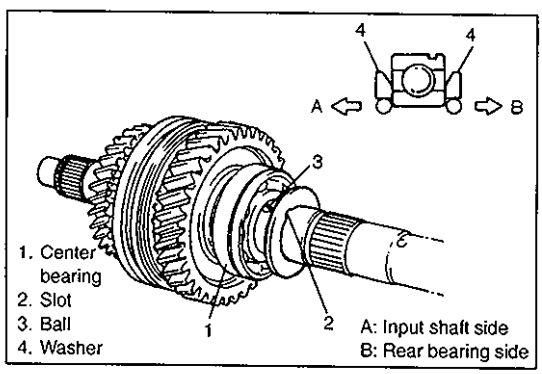

1. Center bearing
2. Slot
3. Ball
4. Washer
A: Input shaft side
B: Rear bearing side

6) Install ball and washer.
As figure shows, install washer so that its circumference chamfered side faces center bearing and its slot comes over ball.

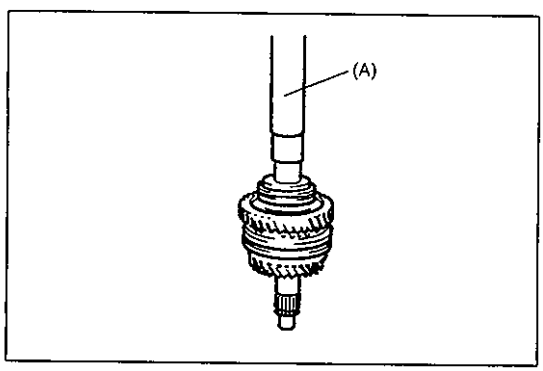

7) Press-fit reverse gear bush, preventing ball installed in step 6) from coming off.

Special Tool
(A): 09925-18010

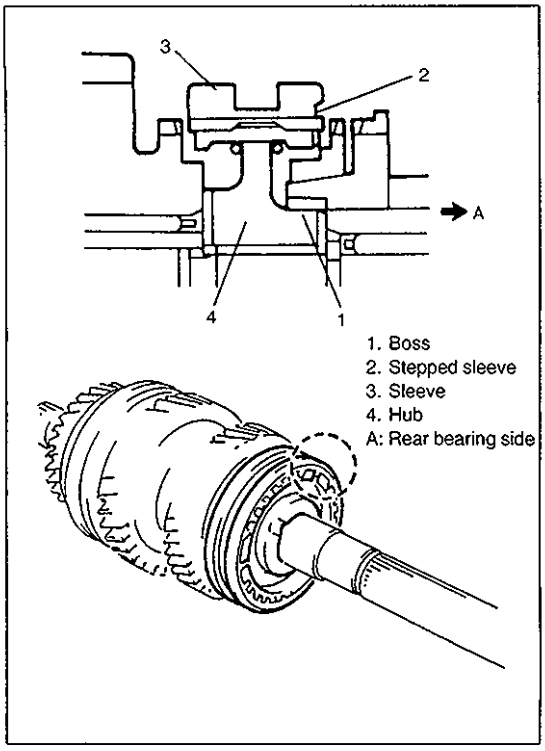

8) Install reverse gear bearing, reverse gear and reverse synchronizer hub/sleeve. For proper direction, make sure to install hub so that the side whose inside boss is smaller in diameter and longer is directed to main shaft rear bearing, and sleeve so that the side whose inside is stepped is also directed to main shaft rear bearing.

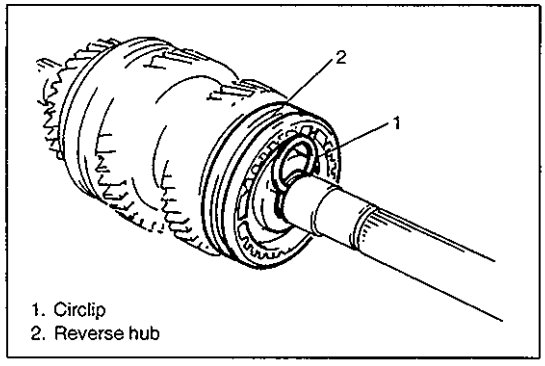

9) Fit reverse hub circlip into groove in main shaft.

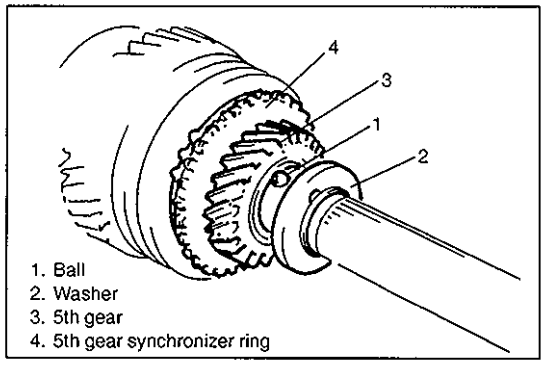

10) Install 5th gear bearing, 5th gear synchronizer ring and 5th gear. Then install ball and washer, making oil groove of washer face 5th gear.

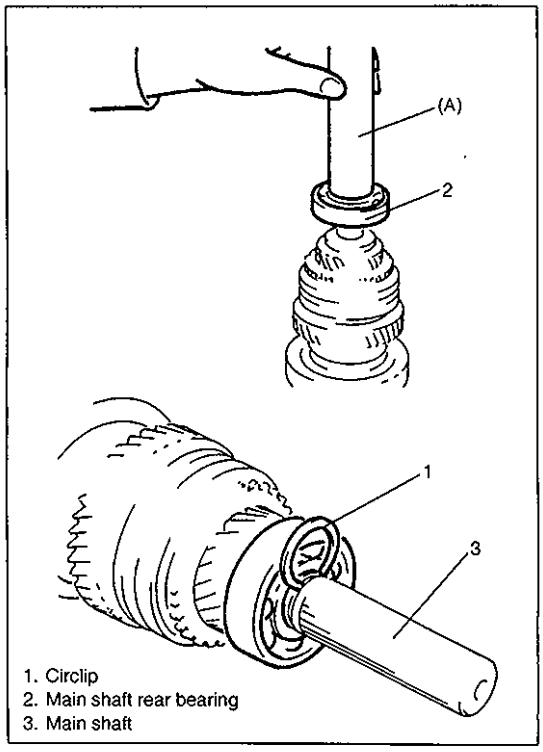

1. Circlip
2. Main shaft rear bearing
3. Main shaft

11) Press-fit main shaft rear bearing and fit circlip into groove in main shaft.

Special Tool
(A): 09925-18010

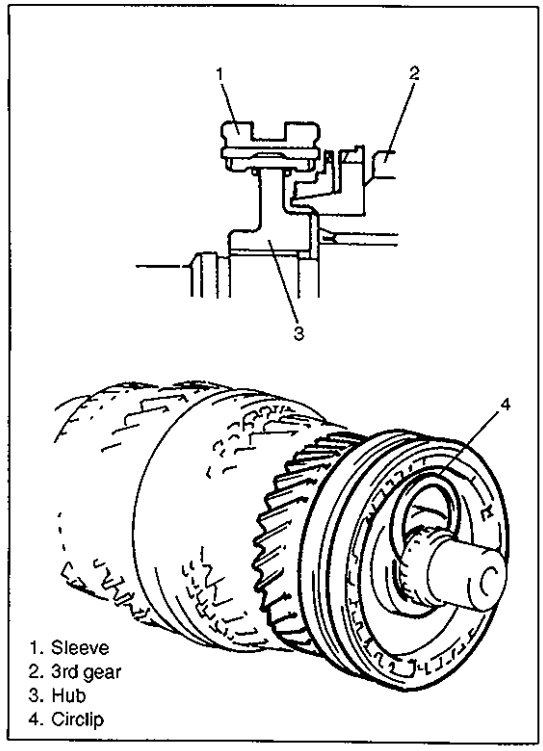

1. Sleeve
2. 3rd gear
3. Hub
4. Circlip

12) Install 3rd gear bearing, 3rd gear, high speed synchronizer ring and hub/sleeve. When installing hub, direct the side with larger outer diameter boss to 3rd gear side. Then fit circlip into groove in main shaft.

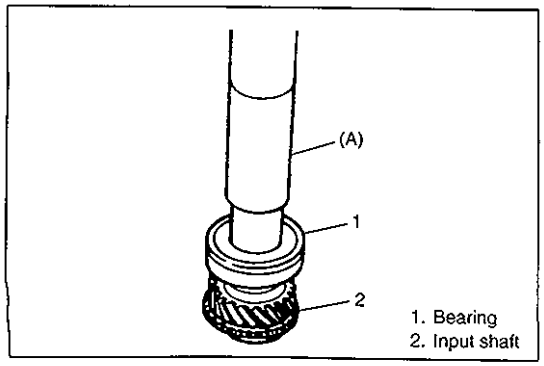

1. Bearing
2. Input shaft

13) When installing bearing, bring it so that its groove for C-ring is in the rear and press-fit with special tool and press.

Special Tool
(A): 09925-18010

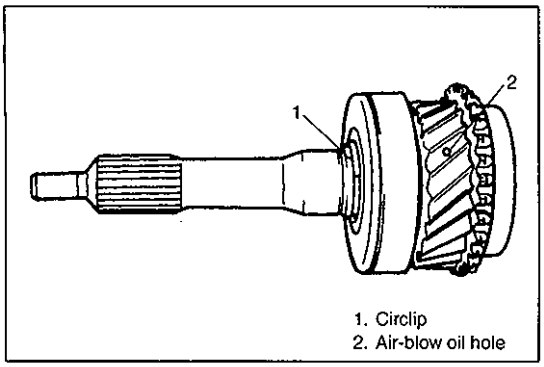

1. Circlip
2. Air-blow oil hole

14) After fitting circlip, air-blow lubrication oil hole.

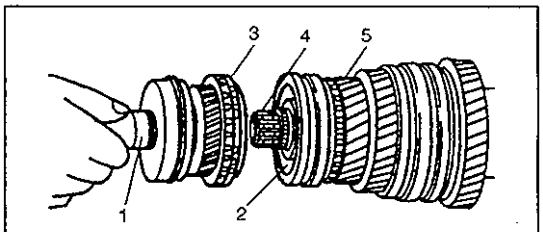

1. Input shaft
2. Main shaft
3. Synchronizer ring
4. Bearing
5. 3rd gear

15) Install synchronizer ring, needle bearing and input shaft.

COUNTERSHAFT AND REVERSE IDLE GEAR

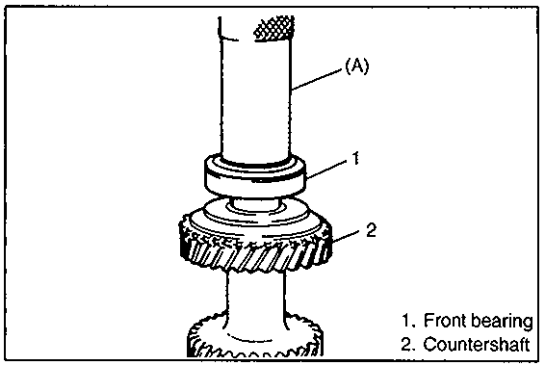

1. Front bearing
2. Countershaft

1) Press-fit front bearing and fit circlip.

Special Tool
(A): 09913-84510

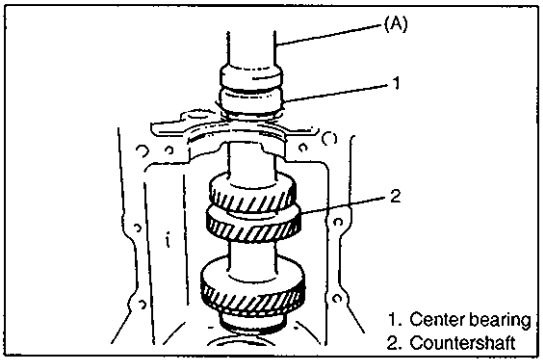

1. Center bearing
2. Countershaft

2) With shaft inserted into case, install center bearing on it and then press-fit shaft by using special tool and hammer. Meanwhile case should be supported on wood blocks.

Special Tool
(A): 09925-18010

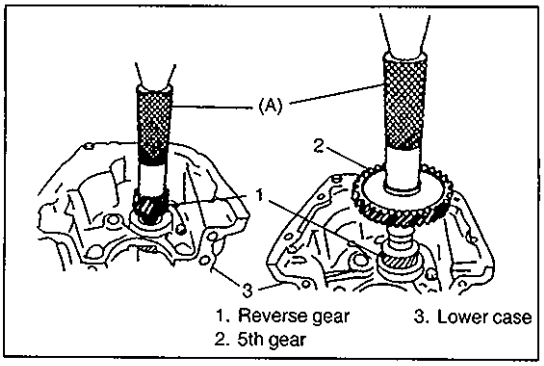

1. Reverse gear
2. 5th gear
3. Lower case

3) Press-fit reverse gear and then 5th gear.

NOTE:
When press-fitting, hold countershaft with its front end set on wood blocks.

Special Tool
(A): 09913-80112

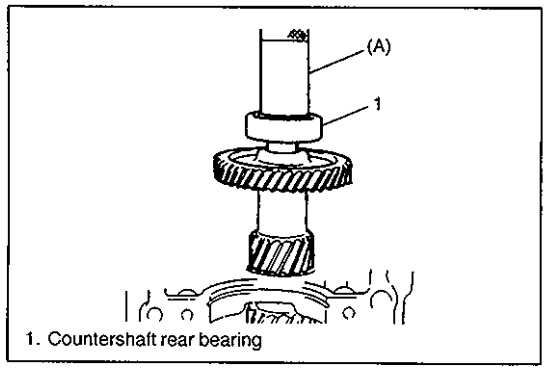

1. Countershaft rear bearing

4) After press-fitting countershaft rear bearing, make sure to fit circlip securely.

NOTE:
When press-fitting, hold countershaft with its front end set on wood blocks.

Special Tool
(A): 09913-80112

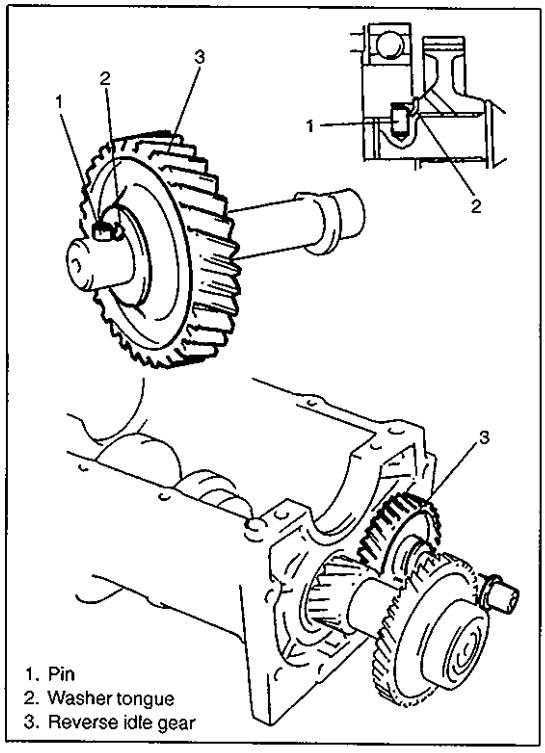

1. Pin
2. Washer tongue
3. Reverse idle gear

5) Install reverse idle gear and washer onto reverse gear shaft and pin into it.
Install above as assembled into lower case with pin and washer tongue aligned as shown.

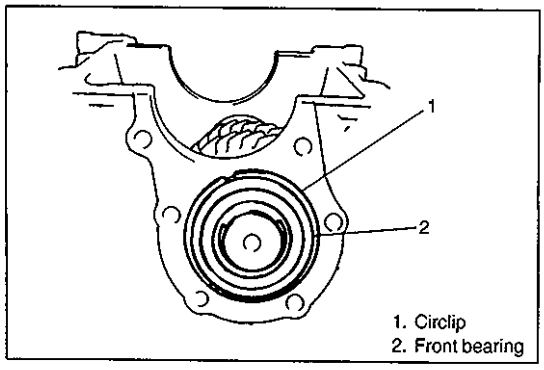

1. Circlip
2. Front bearing

6) Fit circlip around bearing and check to make sure that circlip just contacts with case surface.

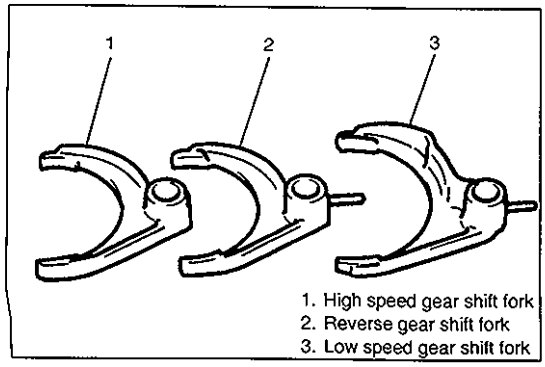

1. High speed gear shift fork
2. Reverse gear shift fork
3. Low speed gear shift fork

SHIFT SHAFTS AND FORKS

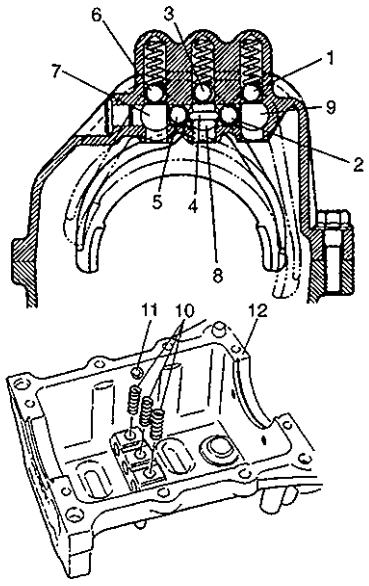

1. Locating ball
2. Interlock ball
3. Locating ball
4. Interlock roller
5. Interlock ball
6. Locating ball
7. Reverse gear shift shaft
8. High speed gear shift shaft
9. Low speed gear shift shaft
10. Locating spring
11. Locating ball
12. Upper case

Note that 3 shift shafts individually have a locating ball and locating spring, and that 2 interlock balls and an interlock roller are used between shafts as shown.

Install low, high and reverse shafts in that order.

1) Install 3 locating springs into 3 holes in upper case. Fit locating ball on top of locating spring in hole.

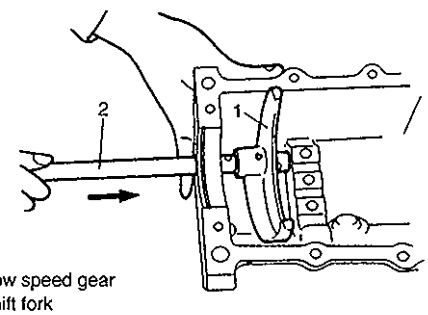

1. Low speed gear shift fork
2. Low speed shift shaft

2) Insert low speed gear shift shaft into upper case and low speed shift fork in the direction as shown.

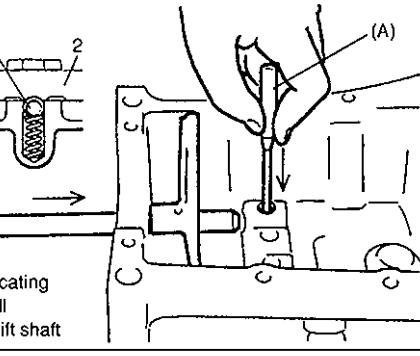

1. Locating ball
2. Shift shaft

3) Push down low speed gear shift shaft locating ball to pass shaft over it and keep inserting shaft until locating ball fits in center slot of 3 continuous slots in shaft.
Drive shift yoke pin into fork and shaft.

Special Tool
(A): 09922-85811

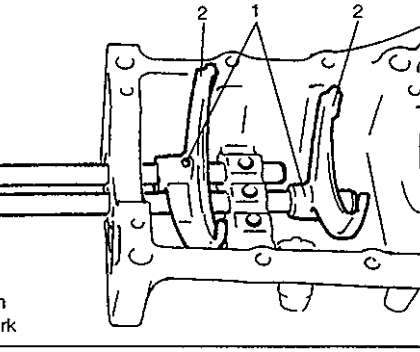

1. Pin
2. Fork

4) Install interlock ball and locating ball in upper case.
After installing interlock roller in high speed gear shift shaft and insert shaft into upper case as described in 2) and 3).
Fork should installed in such direction as shown. Then drive shift yoke pin until it becomes flush with outer surface of fork.

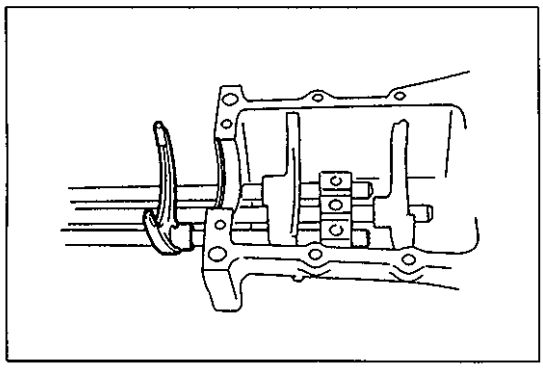

5) Install interlock ball and locating ball into upper case. Then insert reverse gear shift shaft into upper case as described in 2) and 3).

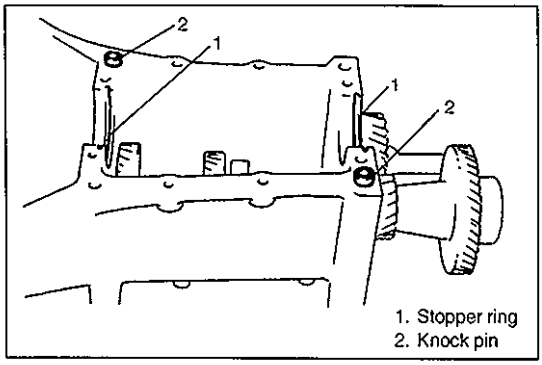

1. Stopper ring
2. Knock pin

TRANSMISSION LOWER CASE AND UPPER CASE

1) With countershaft ass'y, reverse idle gear and reverse gear shaft installed in lower case, check to ensure that bearing stopper rings are fitted in both sides of lower case as shown. Also check for 2 knock pins.

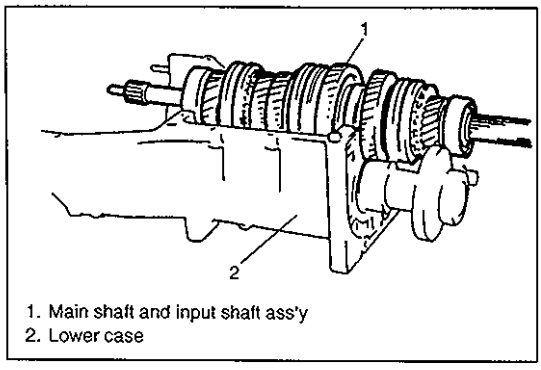

1. Main shaft and input shaft ass'y
2. Lower case

2) Make sure that mating surfaces of both lower and upper cases are clean.
3) Install main shaft and input shaft ass'y in lower case.

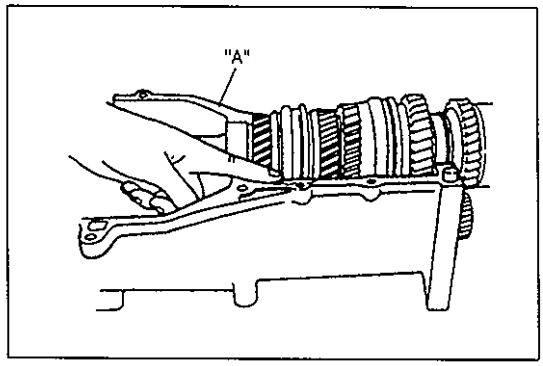

4) Uniformly apply sealant to mating surface of lower case.

"A": Sealant 99000-31110

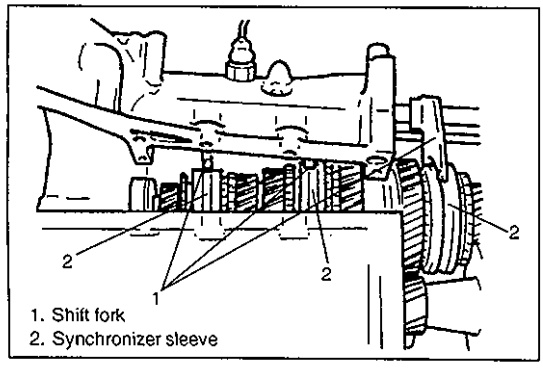

1. Shift fork
2. Synchronizer sleeve

5) Install upper case to lower case by matching 3 shift forks with 3 grooves in synchronizer sleeve on main shaft respectively.
6) Tighten case bolts to specification.

Tightening Torque for transmission case bolt:
23 N·m (2.3 kg-m, 17.0 lb-ft)

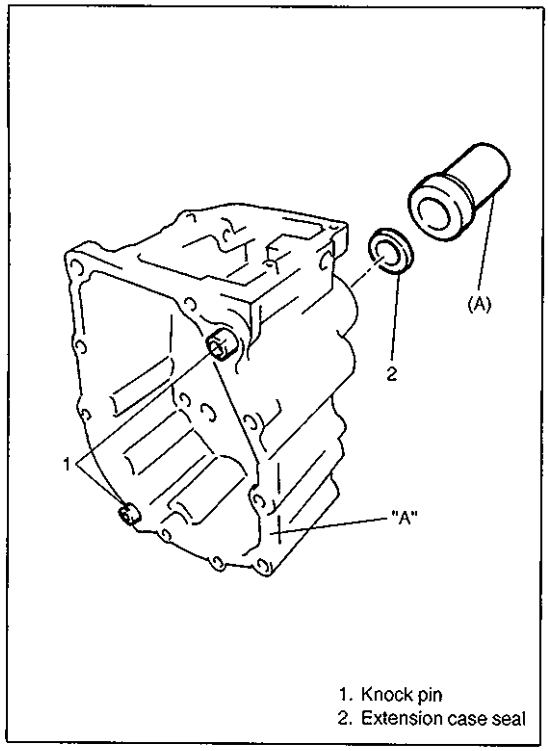

1. Knock pin
2. Extension case seal

EXTENSION CASE

1) Check to ensure that knock pins are fitted.
2) Install extension case seal so that end surface of oil seal becomes flush with that case. Apply grease to extension case seal lip.

Grease 99000-25010

Special Tool
(A): 09913-85210

3) Clean surface of extension case to mate with transmission case and uniformly apply sealant.

"A": Sealant 99000-31110

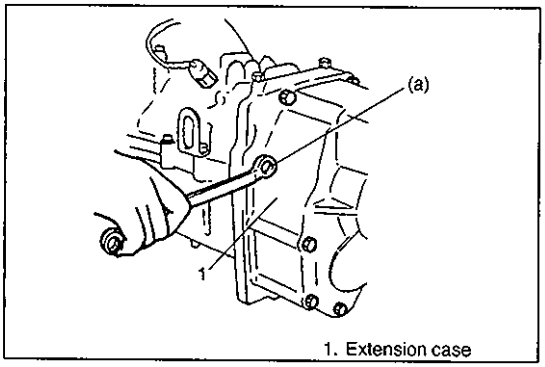

1. Extension case

4) Make sure that 3 shift shafts are in neutral position.
5) Install extension case to transmission case.
6) Tighten case bolts to specification.

Tightening Torque
(a): 23 N·m (2.3 kg-m, 17.0 lb-ft)

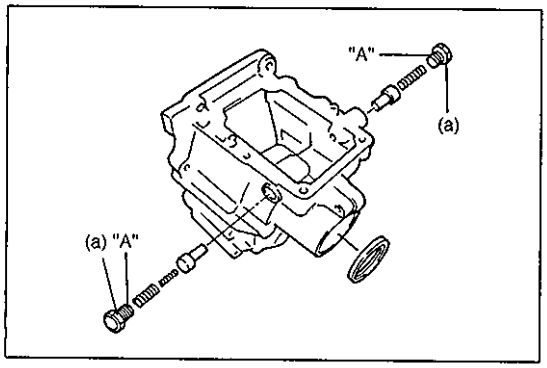

7) Install select guide pins, low select return spring and reverse select return springs (outer and inner).
8) Apply thread lock to thread of select return spring bolt. And tighten select return spring bolt to extension case to specified torque.

Tightening Torque
(a): 23 N·m (2.3 kg-m, 17.0 lb-ft)

"A": Thread lock 99000-32020

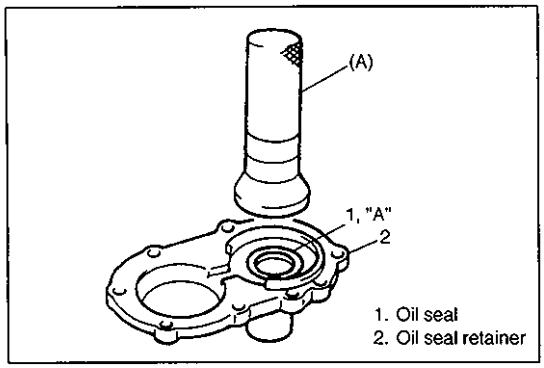

INPUT SHAFT BEARING RETAINER

1) Install new oil seal with special tool and hammer up to case surface, apply grease to oil seal lip.

   Special Tool
   (A): 09951-16080

   "A": Grease 99000-25010

2) Clean surface of retainer to mate with transmission case and uniformly apply sealant.

   Sealant 99000-31110

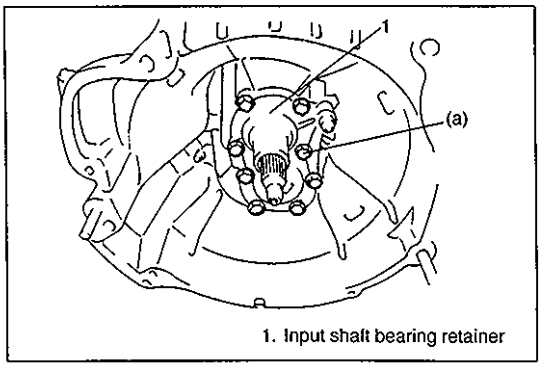

3) Tighten retainer bolts to specification.

   Tightening Torque
   (a): 23 N·m (2.3 kg-m, 17.0 lb-ft)

4) Check transmission input shaft for easy rotation by hand.
5) Check each select and shift shaft for operation.

CLUTCH RELEASE BEARING

Before installing bearing, apply grease to inner surface of clutch release bearing. For detail, refer to Section 7C.

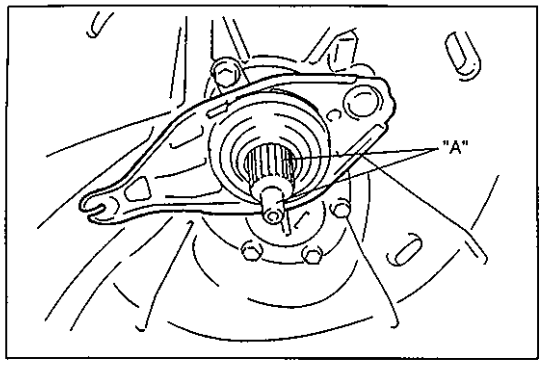

INPUT SHAFT

Before remounting transmission ass'y to engine and vehicle, apply grease to input shaft.

"A": Grease 99000-25210

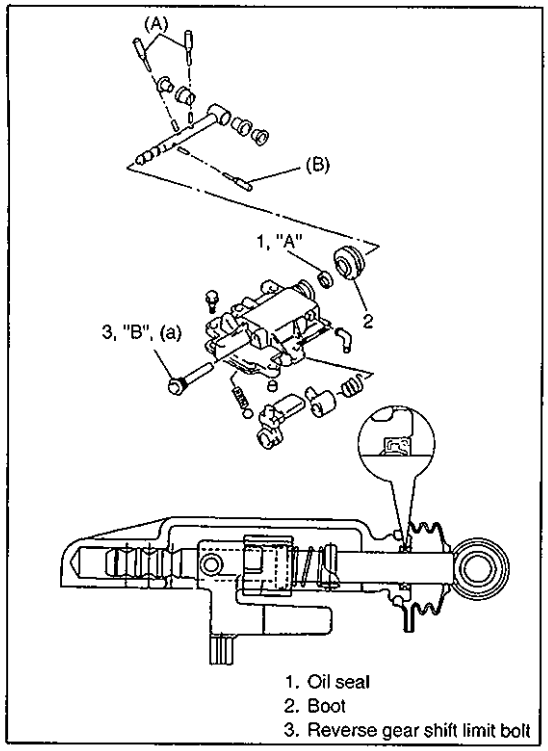

1. Oil seal
2. Boot
3. Reverse gear shift limit bolt

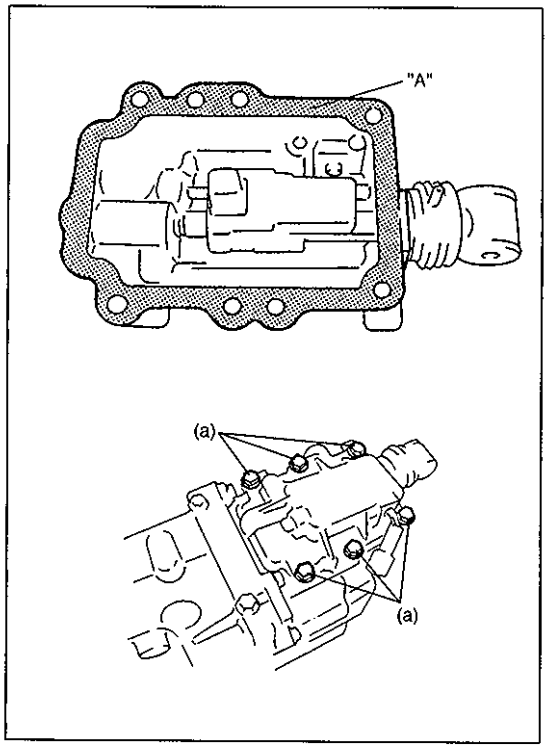

FRONT GEAR SHIFT CONTROL

1) Clean all parts thoroughly, inspect them and replace with new ones as required.
2) Assemble component parts by reversing removal procedure.

Special Tools
(A): 09922-85811
(B): 09925-78210

- Apply grease to lip portion of oil seal. Refer to left figure for installing direction.

  "A": Grease 99000-25010

- Install boot in such direction that breather faces downward.
- Apply thread lock cement to reverse gear shift limit bolt and tighten it to specified torque.

  "B": Thread lock cement 99000-32110

  Tightening Torque
  (a): 23 N·m (2.3 kg-m, 17.0 lb-ft)

3) When installing gear shift lever front case to extension case, clean joint faces, and then apply sealant to joint faces.

   "A": Sealant 99000-31110

   Tightening Torque
   (a): 23 N·m (2.3 kg-m, 17.0 lb-ft)

TIGHTENING TORQUE SPECIFICATIONS

Be sure to torque each bolt and nut according to specification given below, whenever loosened.
If specified torque for particular bolt or nut is not included in the list, refer to Section 0A.

Fastening Parts	Tightening Torque		
	N·m	kg-m	lb-ft
Gear shift control boot cover bolt	23	2.3	17.0
Gear shift lever plate bolt	5.5	0.55	4.0
Extension rod joint bolt	50	5.0	36.5
Control shaft joint nut	18	1.8	13.0
Select return spring bolt	23	2.3	17.0
Gear shift lever front case bolt	23	2.3	17.0
Transmission case bolt	23	2.3	17.0
Extension case bolt	23	2.3	17.0
Transmission oil filler and drain plug	23	2.3	17.0
Input shaft bearing retainer bolt	23	2.3	17.0
Reverse gear shift limit bolt	23	2.3	17.0
Transmission to engine bolt and nuts	61	6.1	44.5
Transmission rear mounting bracket bolt	25	2.5	18.0
Transmission rear mounting bolt	25	2.5	18.0

REQUIRED SERVICE MATERIALS

MATERIALS	RECOMMENDED SUZUKI PRODUCTS	USE
Lithium grease	SUZUKI SUPER GREASE A (99000-25010)	• Oil seal lips • Gear shift control lever • Gear shift control shaft bushes
	SUZUKI SUPER GREASE I (99000-25210)	• Input shaft spline front end
Sealant	SUZUKI BOND NO.1215 (99000-31110)	• Oil drain and filler plug • Mating surface of transmission case • Mating surface of extension case • Mating surface of input shaft bearing retainer • Mating surface of gear shift lever case
Thread lock cement	THREAD LOCK 1333B (99000-32020)	• Reverse gear shift limit bolt • Gear shift rear arm bolt

SPECIAL TOOLS

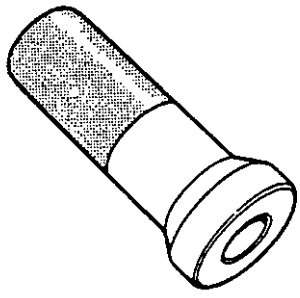

09951-16080
Bearing installer

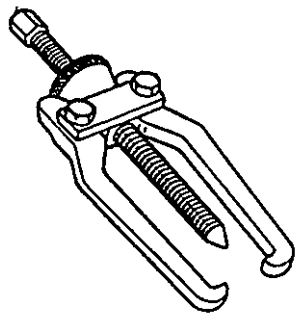

09913-65135
Bearing puller

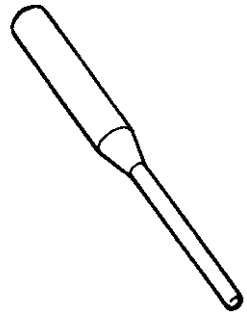

09922-85811
Spring pin remover

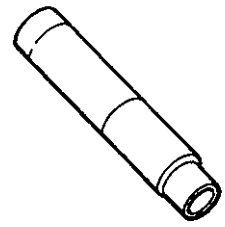

09925-18010
Bearing installer

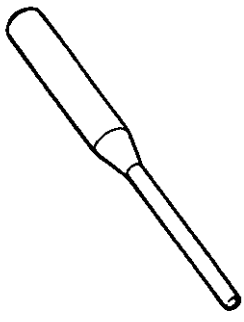

09925-78210
Spring pin remover

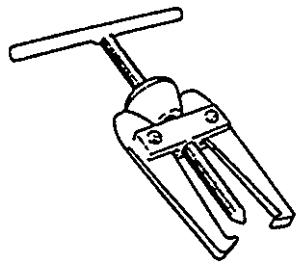

09913-60910
Bearing puller

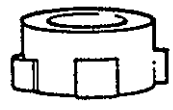

09927-08210
Shaft remover

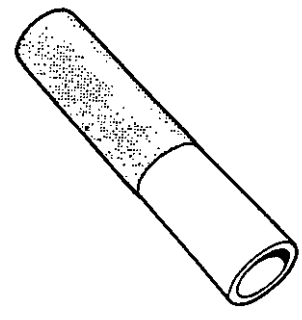

09913-80112
Bearing installer

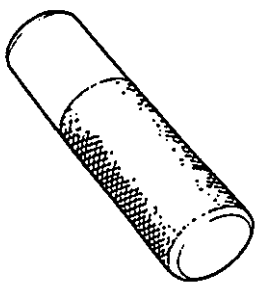

09913-84510
Bearing installer

SECTION 7B

AUTOMATIC TRANSMISSION (4 A/T)

WARNING:
For vehicles equipped with Supplemental Restraint (Air Bag) System

- **Service on and around the air bag system components or wiring must be performed only by an authorized SUZUKI dealer. Refer to "Air Bag System Components and Wiring Location View" under "General Description" in air bag system section in order to confirm whether you are performing service on or near the air bag system components or wiring. Please observe all WARNINGS and "Service Precautions" under "On-Vehicle Service" in air bag system section before performing service on or around the air bag system components or wiring. Failure to follow WARNINGS could result in unintentional activation of the system or could render the system inoperative. Either of these two conditions may result in severe injury.**
- **Technical service work must be started at least 90 seconds after the ignition switch is turned to the "LOCK" position and the negative cable is disconnected from the battery. Otherwise, the system may be activated by reserve energy in the Sensing and Diagnostic Module (SDM).**

NOTE:
The transmission type can only be identified by the vehicle identification number (VIN) because the transmission external appearances are identical.
However, if the valve body is removed from the transmission case, it can be identified by the fluid drain holes whether they exist or not.

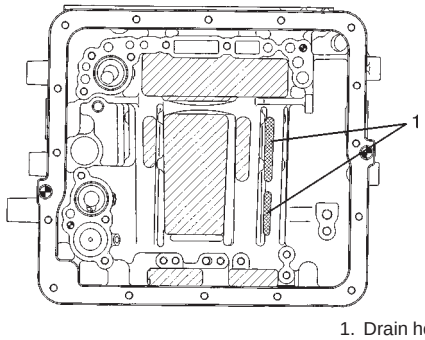

1. Drain holes

Type-1: No drain hole exist
Type-2: Drain holes are opened

Type-1

On and after ⓍJSAFJA33C00100001Ⓧ
On and after ⓍJSAFJB33C00100001Ⓧ
On and after ⓍJSAFJB33V00100001Ⓧ
On and after ⓍJSAFJB33VY0100001Ⓧ
On and after ⓍJSAFJB33VY4100001Ⓧ
On and after JS3JB33V⍁14100001
On and after JS3JB33V⍁Y4100001
On and after JB33V-100001

From ⓍJSAFJA43V00100001Ⓧ to ⓍJSAFJA43V00100006Ⓧ
From ⓍJSAFJB43V00100001Ⓧ to ⓍJSAFJB43V00118884Ⓧ
From ⓍJSAFJB43V00118886Ⓧ to ⓍJSAFJB43V00119017Ⓧ
From ⓍJSAFJB43V00109019Ⓧ to ⓍJSAFJB43V00119022Ⓧ
From ⓍJSAFJB43V00119024Ⓧ to ⓍJSAFJB43V00119038Ⓧ
From ⓍJSAFJB43V24100001Ⓧ to ⓍJSAFJB43V00100117Ⓧ
From JS3JB43V⍁14100001 to JS3JB43V⍁14101089
From JS3JB43V⍁24100001 to JS3JB43V⍁24100042

Type-2

On and after ⓧJSAFJA43V00100007ⓧ
ⓧJSAFJB43V00118885ⓧ
ⓧJSAFJB43V00119018ⓧ
ⓧJSAFJB43V00119023ⓧ
On and after ⓧJSAFJB43V00119039ⓧ
On and after ⓧJSAFJB43V20100001ⓧ
On and after ⓧJSAFJB43V24100118ⓧ
On and after JS3JB43V⍁14101090
On and after JS3JB43V⍁24100043

CONTENTS

GENERAL DESCRIPTION 7B- 3
ELECTRONIC SHIFT CONTROL SYSTEM 7B- 7

DIAGNOSIS 7B-14
Trouble Diagnosis Table 7B-18
Stall Test 7B-20
Time Lag Test 7B-21
Line Pressure Test 7B-21
Engine Brake Test 7B-22
"P" Range Test 7B-23

ELECTRONIC CONTROL SYSTEM DIAGNOSIS 7B-24
Precautions in Diagnosing Troubles 7B-24
Diagnostic Trouble Code(s) Check 7B-25
How to Clear Diagnostic Trouble Code(s) (DTC) 7B-27
Diagnostic Trouble (DTC) Code Table 7B-28
TCM Power and Ground Circuit Check 7B-29
DTC 14 Turbine Rev. Sensor Signal 7B-30
DTC 18 Turbine Rev. Sensor, A/T VSS or A/T Itself 7B-31
DTC 21 Shift Solenoid No. 1 ..... 7B-32
DTC 23 Shift Solenoid No. 2 ..... 7B-32
DTC 43 Shift Solenoid No. 3 ..... 7B-32
DTC 45 Shift Solenoid No. 4 ..... 7B-32
DTC 25 Lock-up Solenoid 7B-32
DTC 22 Shift Solenoid No. 1 ..... 7B-34
DTC 24 Shift Solenoid No. 2 ..... 7B-34
DTC 44 Shift Solenoid No. 3 ..... 7B-34
DTC 46 Shift Solenoid No. 4 ..... 7B-34
DTC 26 Lock-up Solenoid 7B-34
DTC 31 A/T VSS 7B-35
DTC 32 Throttle Position Signal 7B-37
DTC 33 Throttle Position Signal 7B-38
DTC 34 Shift Switch 7B-39
DTC 35 Engine Rev. Signal 7B-41
DTC 36 A/T Fluid Temperature Sensor 7B-42
DTC 52 Power Source Relay in TCM 7B-44
Inspection of TCM and Its Circuits 7B-45

ON-VEHICLE SERVICE 7B-47
MAINTENANCE SERVICE 7B-47
Fluid Level 7B-47
Fluid Change Intervals 7B-48
Changing Fluid 7B-48
Oil Cooler Hoses 7B-48
SELECTOR LEVER 7B-49
SHIFT SWITCH 7B-50
SELECTOR ROD 7B-52
A/T VSS 7B-53
TURBINE REV. SENSOR 7B-54
VSS 7B-54
THROTTLE POSITION SENSOR 7B- 54
ECT SENSOR 7B- 54
O/D CUT SWITCH 7B- 55
SHIFT SOLENOID VALVES AND LOCK-UP SOLENOID VALVE 7B- 56
A/T FLUID TEMP. SENSOR 7B- 56
EXTENSION CASE OIL SEAL 7B- 57
TCM 7B- 58
Learning Control Memory Initialization .. 7B- 58
INTERLOCK CABLE (if equipped) 7B- 59

TRANSMISSION UNIT REPAIR OVERHAUL 7B- 61
DISMOUNTING 7B- 61
REMOUNTING 7B- 62
DISASSEMBLY 7B- 63
DISASSEMBLY OF SUBASSEMBLY 7B- 71
Oil Pump 7B- 72
Front Clutch 7B- 74
Rear Clutch 7B- 79
Planetary Set 7B- 84
Valve Body 7B- 86
Output Shaft Assembly 7B- 91
UNIT ASSEMBLY 7B- 92

TIGHTENING TORQUE SPECIFICATIONS . 7B-105

SPECIAL TOOLS 7B-106

REQUIRED SERVICE MATERIALS 7B-107

GENERAL DESCRIPTION

This automatic transmission is a full automatic type with 3-speed plus overdrive (O/D).
The torque converter is a 3-element, 1-step and 2-phase type. The gear shift device consists of 2 sets of planetary gear units, 2 sets of disc type clutches and 3 sets of disc type brakes. The gear shift is done by selecting one of 6 positions ("P", "R", "N", "D", "2" and "L") by means of the select lever installed on the floor. On the shift knob, there is an overdrive (O/D) cut switch which allows shift-up to the overdrive mode and shift-down from the overdrive mode.

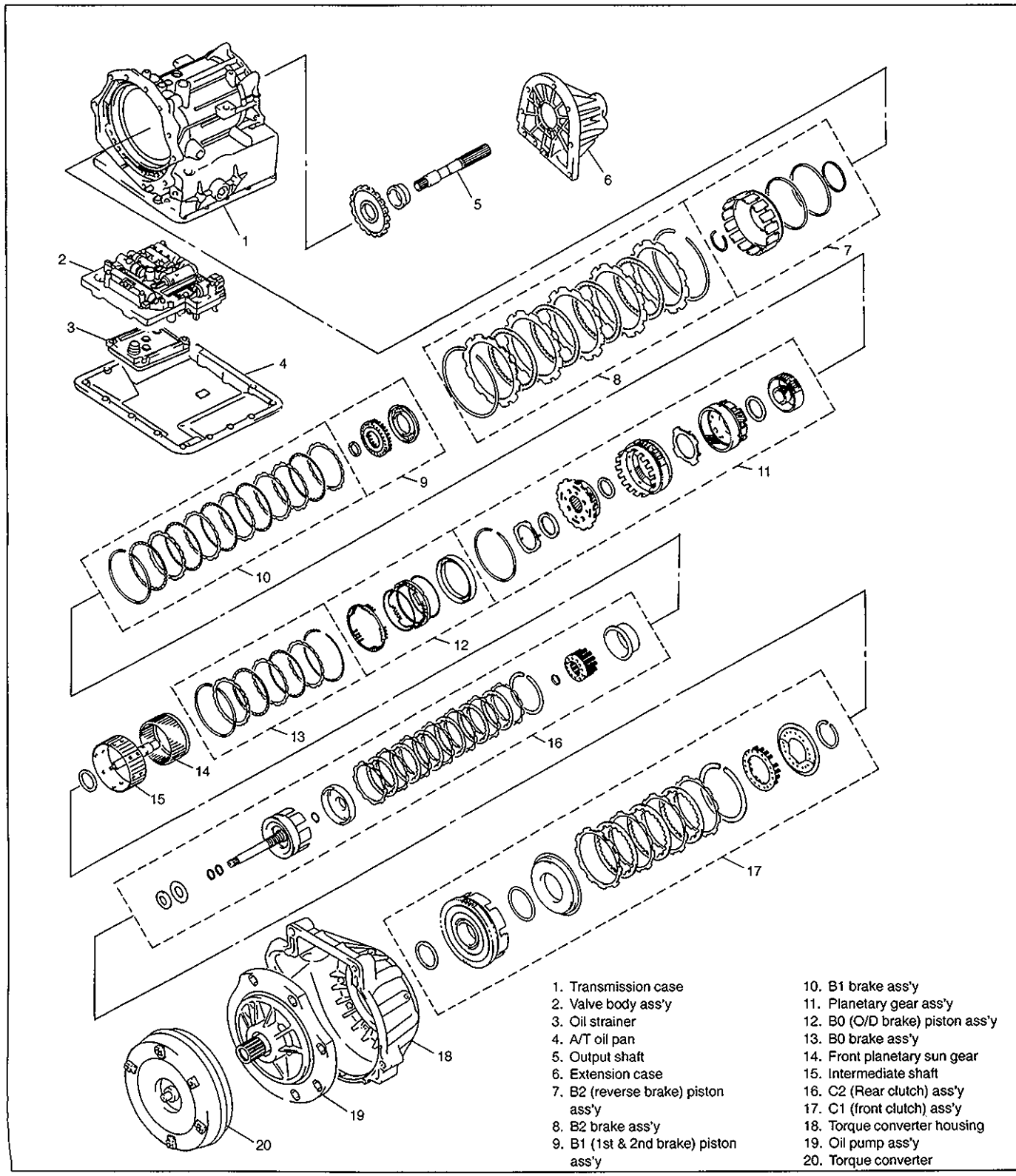

1. Transmission case
2. Valve body ass'y
3. Oil strainer
4. A/T oil pan
5. Output shaft
6. Extension case
7. B2 (reverse brake) piston ass'y
8. B2 brake ass'y
9. B1 (1st & 2nd brake) piston ass'y
10. B1 brake ass'y
11. Planetary gear ass'y
12. B0 (O/D brake) piston ass'y
13. B0 brake ass'y
14. Front planetary sun gear
15. Intermediate shaft
16. C2 (Rear clutch) ass'y
17. C1 (front clutch) ass'y
18. Torque converter housing
19. Oil pump ass'y
20. Torque converter

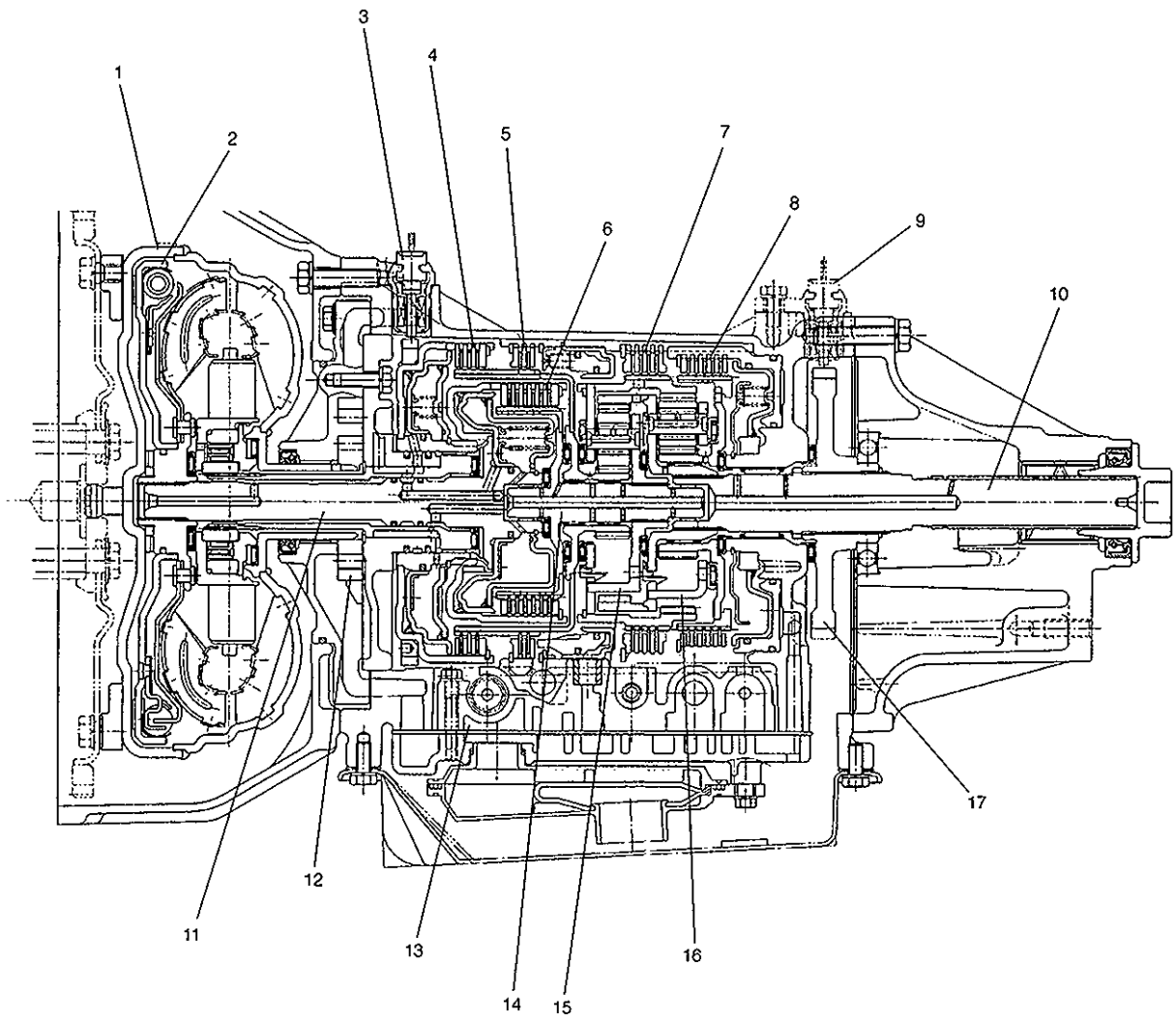

1. Torque converter
2. Lock-up clutch
3. Turbine rev. sensor
4. Front clutch (C1)
5. Overdrive brake
6. Rear clutch (C2)
7. Reverse brake
8. 1st and 2nd brake
9. A/T vehicle speed sensor
10. Output shaft
11. Input shaft
12. Oil pump
13. Valve body
14. Intermediate shaft
15. Front carrier
16. Rear carrier
17. Parking gear

Item			Specifications		
Torque converter	Type Stall torque ratio		3-element, 1-step, 2-phase type More than 1.7		
Oil pump	Type Drive system		Internal gear type oil pump Engine driven		
Gear change device	Type		Forward 4-step, reverse 1-step planetary gear type		
	Shift position		"P" range "R" range "N" range "D" range (O/D ON) "D" range (O/D OFF) "2" range "L" range	Gear in neutral, output shaft fixed, engine start Reverse Gear in neutral, engine start Forward 1st ↔ 2nd ↔ 3rd ↔ 4th (O/D) automatic gear change Forward 1st ↔ 2nd ↔ 3rd ← 4th automatic gear change Forward 1st ↔ 2nd ← 3rd automatic gear change Forward 1st ← 2nd reduction, and fixed at 1st gear	
	Gear ratio	1st	2.962	Number of teeth	Front sun gear : 21 Rear sun gear : 34 Front pinion gear : 19 Rear pinion gear : 16 Front internal gear : 59 Rear internal gear : 66
		2nd	1.515		
		3rd	1.000		
		4th (overdrive gear)	0.737		
		Reverse (reverse gear)	2.809		
	Control elements		Wet type multi-disc clutch ..... 2 sets Wet type multi-disc brake ..... 3 sets		
	Final gear reduction ratio (Differential)		3.909		
Lubrication	Lubrication system		Force feed system by oil pump		
Cooling	Cooling system		Radiator assisted cooling (water-cooled)		
Fluid used			Equivalent of DEXRON®-IIE or DEXRON®-III		

FUNCTIONS

NOTE:
For operation of each part, refer to TABLE OF COMPONENT OPERATION.

PART NAME	FUNCTION
Front clutch	Meshes input shaft and front sun gear.
Rear clutch	Meshes input shaft and front internal gear and front carrier.
Overdrive brake	Fixes front sun gear.
1st & 2nd brake	Fixes rear sun gear.
Reverse brake	Fixes front carrier and rear internal gear.

TABLE OF COMPONENT OPERATION

Selector position / Gear position / Part		Front clutch	Rear clutch	Overdrive brake	1st & 2nd brake	Reverse brake
P		○	×	×	×	×
R		○	×	×	×	○
N		○	×	×	×	×
D	1st	○	×	×	○	×
	2nd	×	○	×	○	×
	3rd	○	○	×	×	×
	4th (O/D)	×	○	○	×	×
2	1st	○	×	×	○	×
	2nd	×	○	×	○	×
L	1st	○	×	×	○	×

○ : Operating × : Not operating

TABLE OF SHIFT SOLENOID VALVE OPERATION

Range & Gear	Shift Solenoid Valve			
	No. 1	No. 2	No. 3	No. 4
[P], [N]	×	○	×	×
1st gear of O/D, [D], [2], [L]	×	○	○	×
2nd gear of O/D, [D], [2], [L]	○	×	○	×
3rd gear of O/D, [D] ([2], [L])	×	×	×	×
4th gear of O/D	○	×	×	○
[R]	×	×	×	×

○ : Operating × : Not operating

ELECTRONIC SHIFT CONTROL SYSTEM

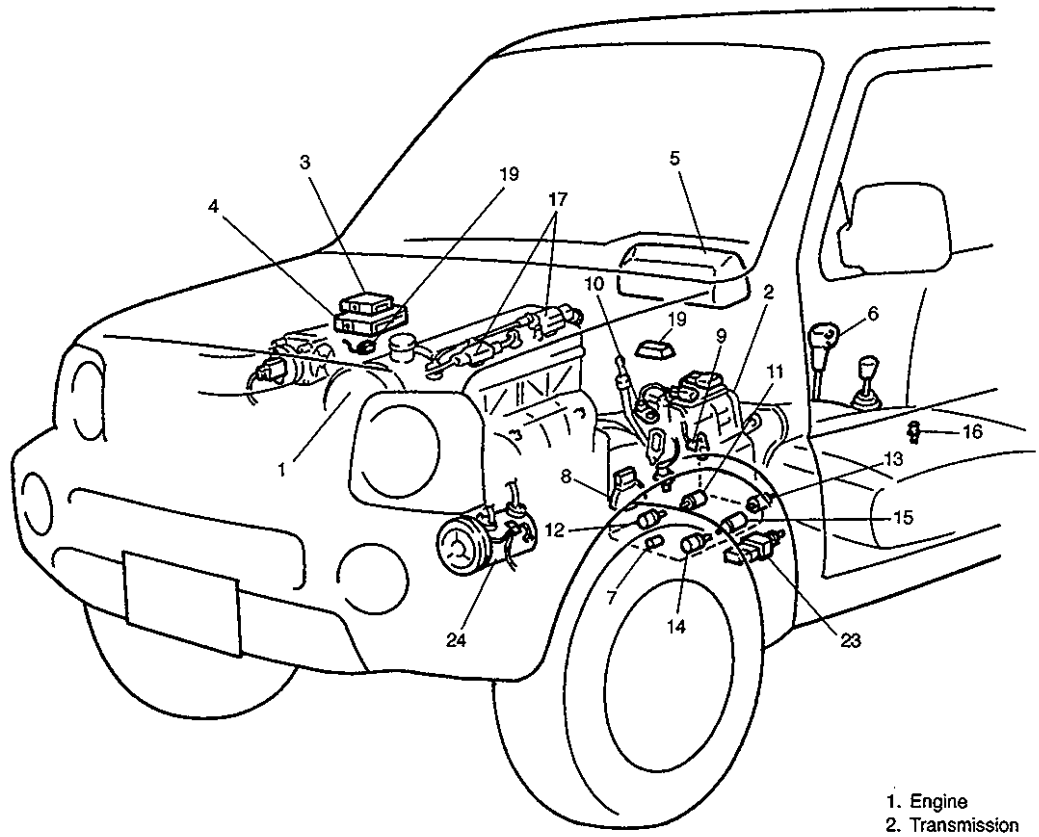

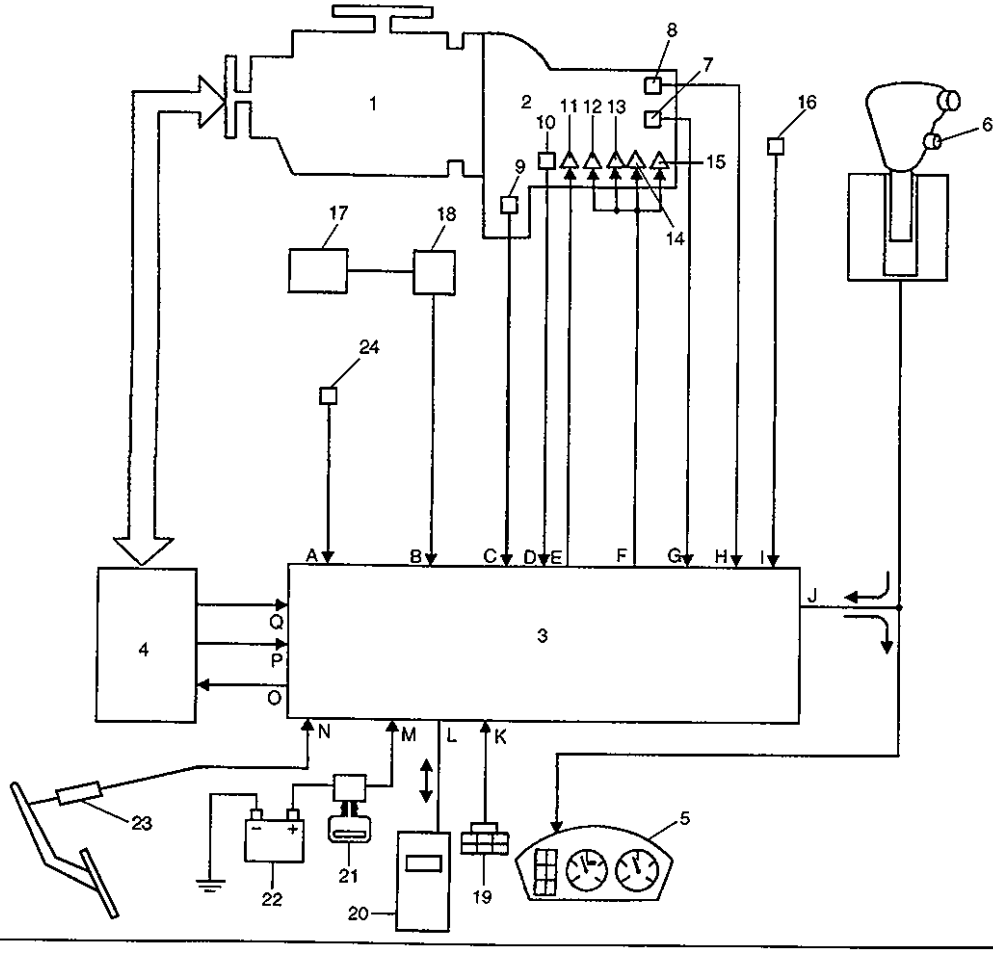

1. Engine
2. Transmission
3. TCM
4. ECM
5. Combination meter (O/D OFF light)
6. O/D cut switch
7. A/T fluid temp. sensor
8. Shift switch
9. A/T VSS
10. Turbine revolution sensor
11. Lock-up solenoid
12. Shift solenoid No.1
13. Shift solenoid No.2
14. Shift solenoid No.3
15. Shift solenoid No.4
16. Vehicle speed sensor (VSS)
17. Ignition coil
18. Noise suppressor
19. Monitor coupler
20. SUZUKI scan tool
21. Ignition switch
22. Battery
23. Brake light switch
24. A/C compressor

A. A/C on signal
B. Engine speed (rev.) signal
C. A/T VSS signal
D. Turbine revolution signal
E. Lock-up control signal
F. Shift control signal
G. A/T fluid temp. signal
H. Shift signal
I. Vehicle speed signal
J. O/D OFF signal
K. Diagnosis switch signal
L. SUZUKI scan tool
M. Power supply
N. Brake signal
O. Idle up signal
P. Throttle signal
Q. Engine coolant temp. signal

TRANSMISSION CONTROL MODULE (TCM)

The TCM is an electronic circuit component that controls gear shift, TCC lock-up and idle-up according to the signal from each sensor. It is a microcomputer consisting of an IC, transistor, diode, etc. It is installed behind glove box.

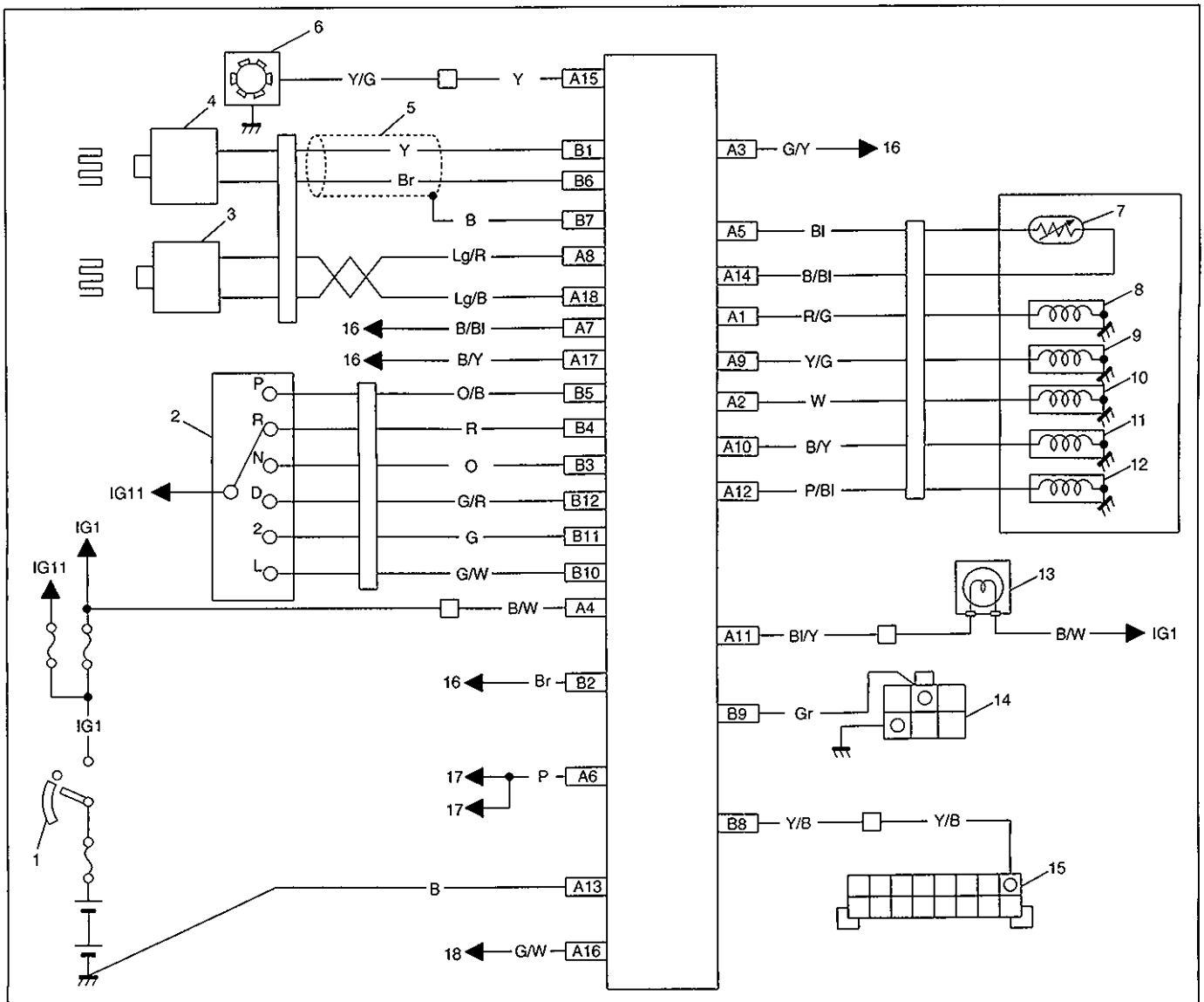

1. Ignition switch
2. Shift switch
3. Turbine rev. sensor
4. A/T VSS
5. Shield wire
6. Vehicle speed sensor
7. A/T fluid temperature sensor
8. Shift solenoid No.1
9. Shift solenoid No.2
10. Shift solenoid No.3
11. Shift solenoid No.4
12. Lock-up solenoid
13. "O/D OFF" light (in combination meter)
14. Monitor coupler
15. DLC
16. To ECM
17. To A/C
18. To brake light switch

Terminal arrangement of TCM coupler (Viewed from harness side)

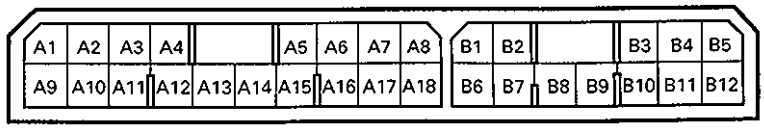

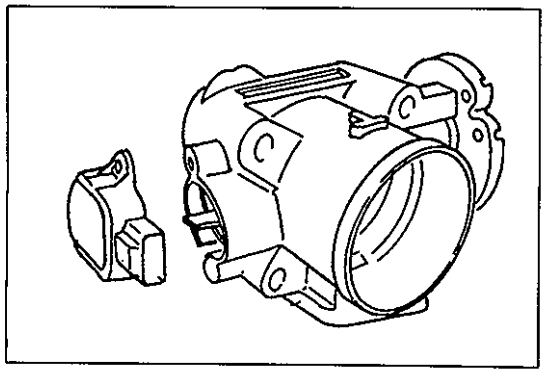

THROTTLE POSITION SENSOR

This sensor is installed to the throttle valve shaft. Throttle valve opening signal is transmitted from TP sensor to ECM as voltage signal. The signal is converted to duty signal in ECM and it is sent to TCM.

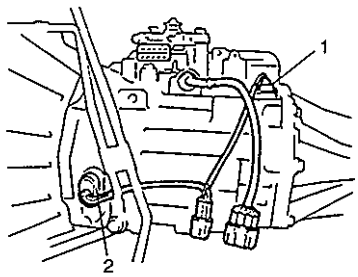

1. A/T VSS
2. Turbine revolution sensor

A/T VEHICLE SPEED SENSOR

This sensor is a pulse generator type that detects revolution of the counter driven gear (vehicle speed) in the transmission case.
The pulse generator is a noncontact sensor consisting of a permanent magnet, coil and gears.
As the Output shaft turns, the magneflux from the permanent magnet varies and a voltage of the frequency corresponding to the rotor revolution occurs in the coil. This voltage is inputted to the TCM where TCM judges the output shaft revolution or the vehicle speed.

TURBINE REVOLUTION SENSOR (INPUT SHAFT REVOLUTION SENSOR)

This sensor is a pulse generator type that detects revolution of torque converter's turbine shaft in the transmission case.
The principle of operation is the same as the vehicle speed sensor.

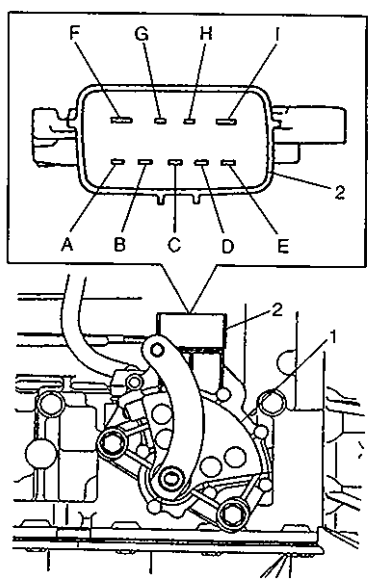

1. Shift switch
2. Shift switch coupler

SHIFT SWITCH

A shift switch is provided so that the engine can be started only when the shift lever is in the "P" or "N" position.

Switch Position \ Terminal No	B	A	H	C	E	D	G	I	F
P			○			○		○	○
R			○		○				
N			○				○	○	○
D			○	○					
2		○	○						
L	○		○						

O/D cut switch ON

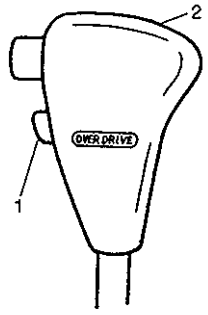

1. O/D cut switch
2 Shift lever

O/D cut switch OFF

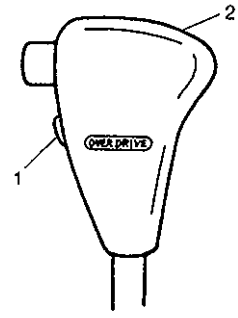

O/D CUT SWITCH

The gear shift up or shift down to and from the O/D gear can be selected with this switch.

O/D cut switch	O/D OFF indicator light
ON	ON
OFF	OFF

FAIL SAFE FUNCTION

This function is provided by the safe mechanism that assures safe driveability even when the solenoid valve, sensor or its circuit fails.

The table below shows the fail safe function for each fail condition of sensor, solenoid or its circuit.

Area	Fail safe condition	Fail safe function
Turbine rev. sensor and its circuit	Turbine rev. sensor input signal too high or too low	Fix at 3rd gear except when vehicle at stop at "L" range, starts with 1st gear
Shift solenoid and its circuit	Shift solenoid and its circuit are open or short	Fix at 3rd gear except when vehicle at stop at "L" range, lowest possible driven gear with the functional solenoid.
A/T VSS	A/T VSS input signal too high or too low	Fix at 3rd gear except when vehicle at stop at "L" range, starts with 1st gear
Throttle opening signal circuit	1. Throttle opening signal of under 0% is input 2. Throttle opening signal of over 100% is input 3. Throttle opening signal fix too high or too low.	Choosing gear as at throttle "full close" and other than that operates as at throttle "full open"
Shift switch and its circuit	1. No shift switch signal input 2. Two or more shift switch signal input	• When trouble found at vehicle at stop, fix at 3rd gear • When trouble found during running, the gear is fixed to the gear right before the trouble occurred until vehicle at stop, 3rd gear.
Engine rev. signal and its circuit	No engine rev signal input	Operates as engine rev. at 4,000 rpm
A/T fluid temperature sensor signal and its circuit	A/T fluid temperature sensor input voltage fails to go down, even engine rev signal shows more than a standard value	Operates as A/T fluid temp. at 100°C, 212°F.
Power source relay in TCM	1. Power source relay output voltage too high 2. Power source relay output voltage too low.	When at condition 1: Fix at 3rd gear except when vehicle at stop at "L" range, starts with 1st gear When at condition 2: Fix at 3rd gear
Lock-up solenoid and its circuit	Lock-up solenoid and its circuit are open or short	Lock-up function is turned off.

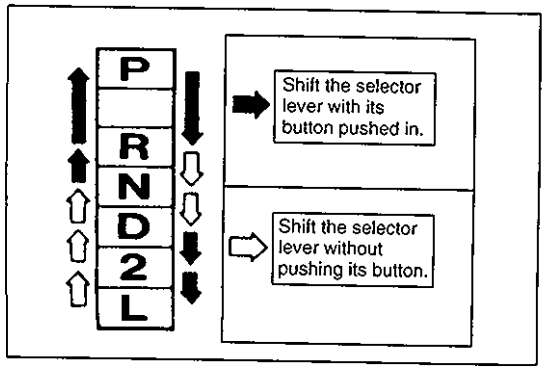

CHANGE MECHANISM

The same select pattern shift lever is used as the floor type and frequently used "N" and "D" ranges are made selectable freely.

AUTOMATIC GEAR SHIFT DIAGRAM

Automatic shift schedule as a result of shift control is shown below.

Unit: km/h (mile/h)

Shift / Throttle opening	1 → 2	2 → 3	3 → 4	4 → 3	3 → 2	2 → 1
Full throttle	36 (22)	85 (53)	127	118 (73)	74 (46)	30 (19)
Closed throttle	16 (10)	30 (19)	43 (27)	38 (24)	13 (8)	13 (8)

Gear Shift Diagram

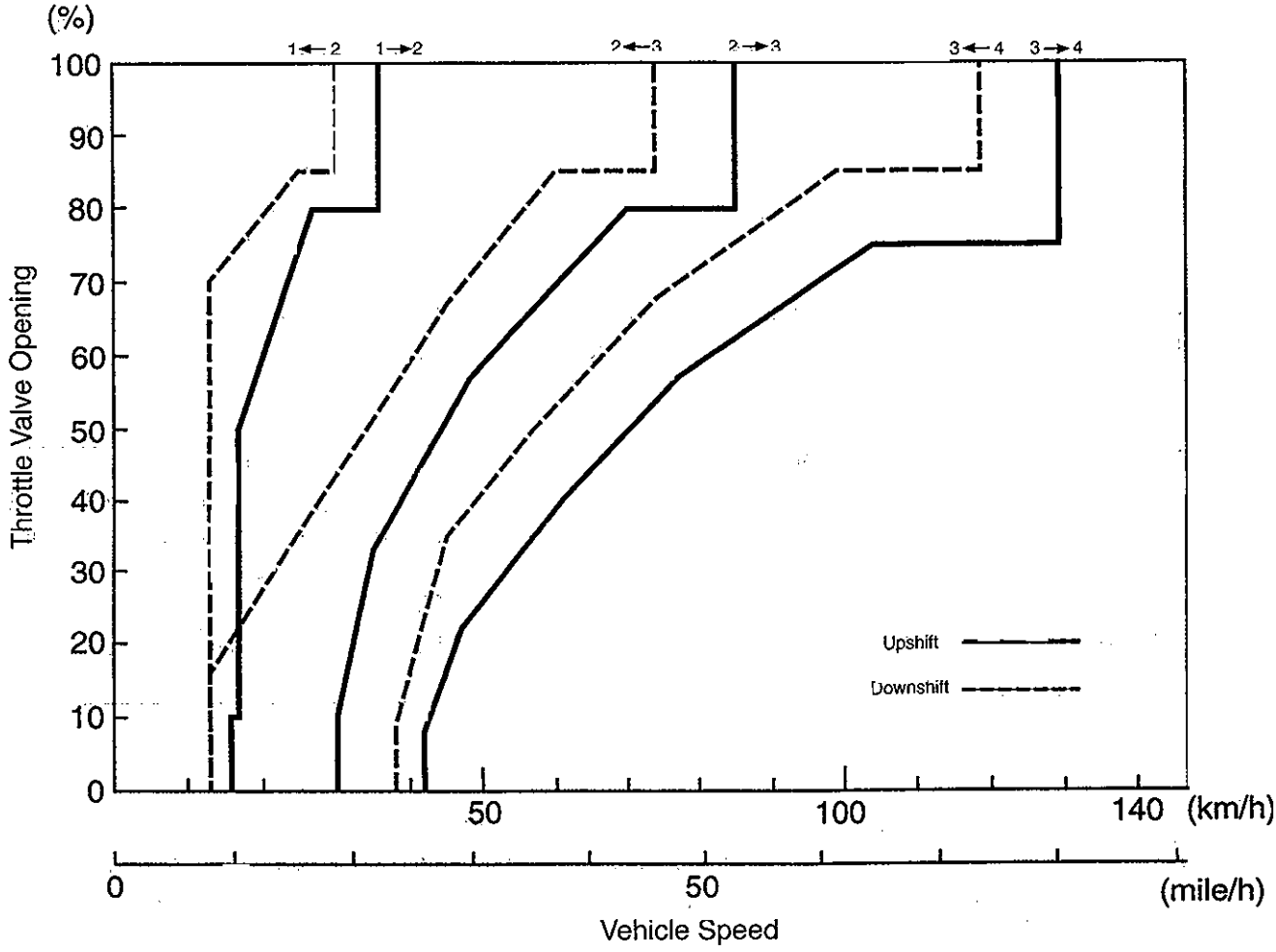

TCC Lock-up Diagram

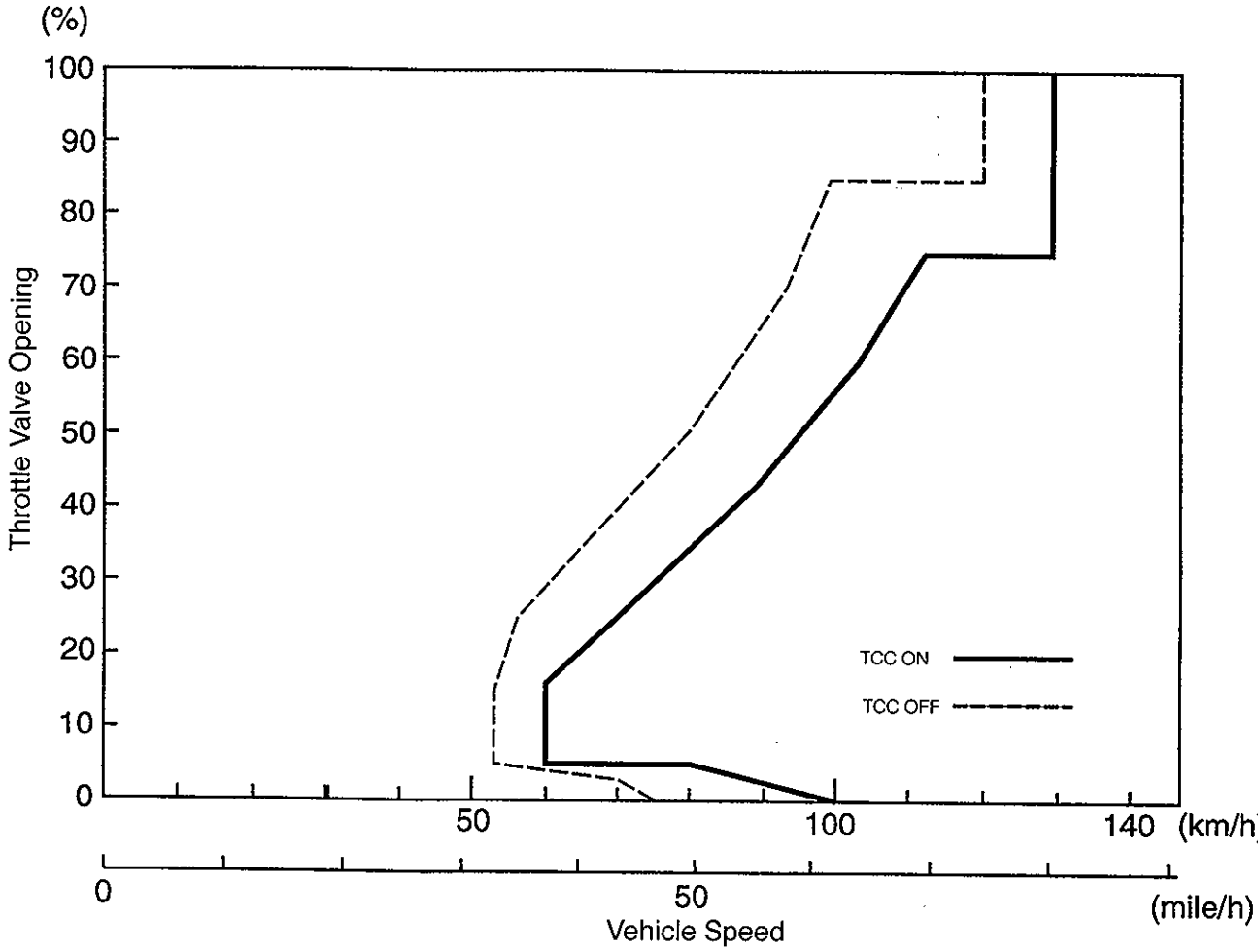

DIAGNOSIS

This vehicle is equipped with an electronic transmission control system, which controls the automatic shift up and shift down timing, etc. suitably to vehicle driving conditions.
When diagnosing a trouble in the transmission including this system, follow "AUTOMATIC TRANSMISSION DIAGNOSTIC FLOW TABLE" given below to obtain correct result smoothly.

AUTOMATIC TRANSMISSION DIAGNOSTIC FLOW CHART

NOTE:
For the details of each step, refer to the following pages.

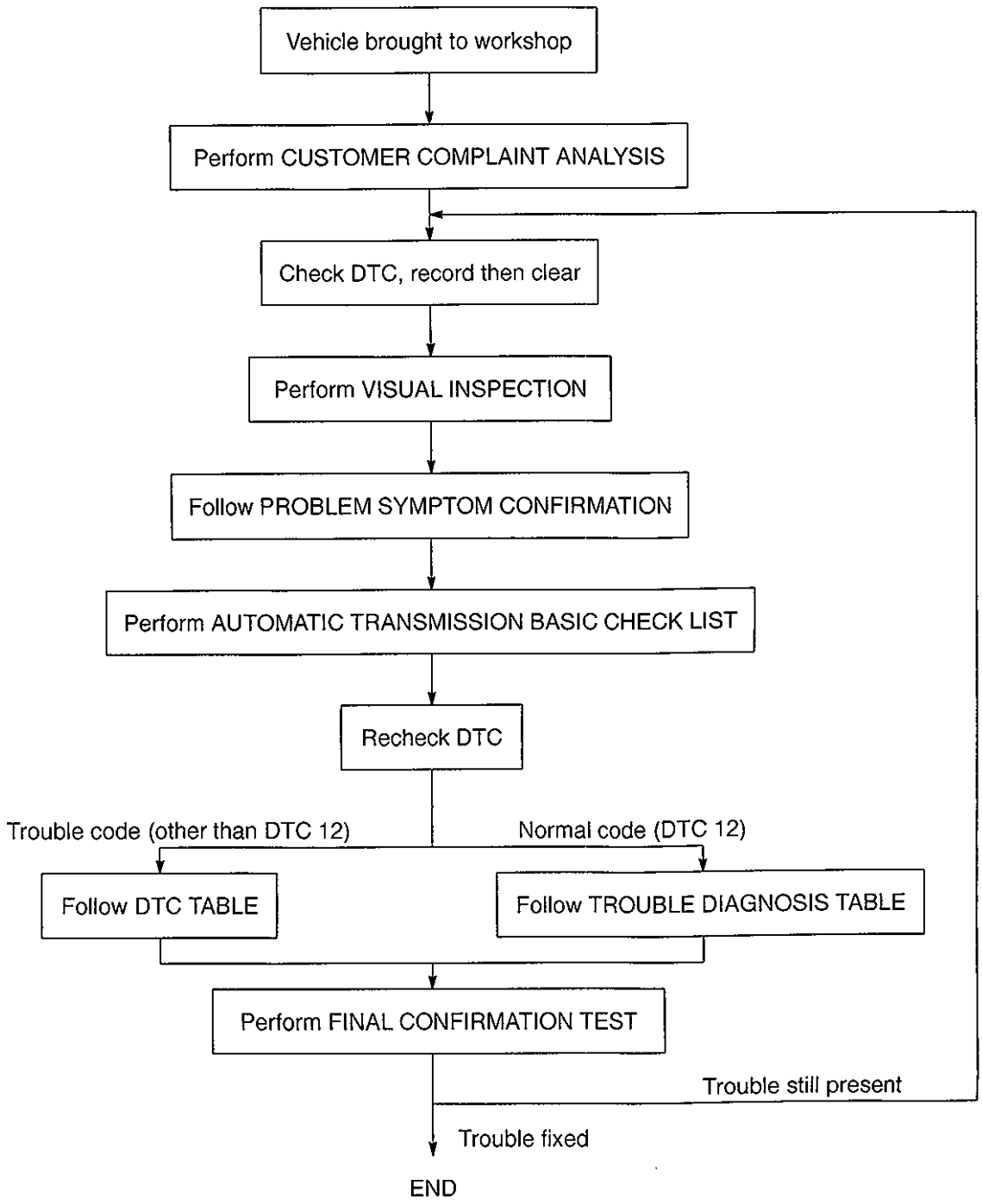

1. CUSTOMER COMPLAINT ANALYSIS

Record details of the problem (failure, complaint) and how it occurred as described by the customer. For this purpose, use of such a questionnaire form as shown below will facilitate collecting information to the point required for proper analysis and diagnosis.

CUSTOMER QUESTIONNAIRE (EXAMPLE)

User name:	Model:	VIN:	
Date of issue:	Date Reg.	Date of problem:	Mileage:
DESCRIPTION OF PROBLEM			
Engine does not start		Engine stops	
Vehicle does not move (forward, rearward)		Transmission does not shift (1st, 2nd, 3rd, 4th, Rev) gear	
No lock-up (TCC clutch operation)		Automatic shift does not occur	
Shift point too high or too low		Transmission slipping in (1st, 2nd 3rd, 4th, Rev) gear	
Excessive gear change shock		Other	
VEHICLE/ENVIRONMENTAL CONDITION WHEN PROBLEM OCCURS			
Environmental Condition			
Weather	fair/cloudy/rain/snow/always/other( )		
Temperature	hot/warm/cool/cold/( ) °C/always		
Frequency	always/sometimes (times/ day, month)/only once		
Road	urban/suburb/highway/mountainous (uphill/downhill)/tarmacadam/gravel/other( )		
Vehicle Condition			
Transmission range	(P, R, N, D, 2, L) range/(→) range		
Transmission temp.	cold/warming up phase/warmed up		
Vehicle	at stop/during driving (constant speed/accelerating/decelerating/right hand corner/left hand corner)/other ( )/speed (km/h)		
Engine	Speed (r/min)/throttle opening (idle/about %/full)		
Brake	Apply/Not apply		
"O/D OFF" switch	ON/OFF		
MALFUNCTION INDICATOR LAMP ("O/D OFF" LIGHT) FUNCTION			
always ON/sometimes ON/not on			
Diagnostic trouble code indicated/not indicated			
Diagnostic trouble code recorded			

NOTE:

The above form is a standard sample. It should be modified according to conditions characteristic of each market.

2. DIAGNOSTIC TROUBLE CODE (DTC) CHECK, RECORD AND CLEAR

DTCs are indicated by the malfunction indicator lamp ("O/D OFF" light). Refer to Diagnostic Trouble Code(s) Check in this section. When a DTC is indicated by this lamp, it means existence of a malfunction in the system represented by that code but whether it still exists (current) or it occurred in the past and has gone (history) is unknown. To know it, clear this DTC once (Refer to How to Clear Diagnostic Trouble Code(s) in this section.), perform TEST DRIVE and/or PROBLEM SYMPTOM CONFIRMATION in this section and then check DTC again as described in DIAGNOSTIC TROUBLE CODE CHECK. Attempt to diagnose the trouble based on the DTC recorded in this step or failure to clear the DTC in this step may mislead the diagnosis or make diagnosing difficult. Even after checking the DTC with the SUZUKI scan tool, diagnosis should be performed according to this flow chart to check TCM for proper self-diagnosis function.

3. VISUAL INSPECTION

As a preliminary step, perform visual check of the following items that support proper function of the automatic transmission.

INSPECTION ITEM	REFERRING SECTION
• Engine oil —— level, leakage	Section 0B
• Engine coolant —— level, leakage	Section 0B
• A/T fluid —— level, leakage, color	Section 0B
• Battery —— fluid level, corrosion of terminal	
• A/T fluid hoses —— disconnection, looseness, deterioration	
• Connectors of electric wire harness —— disconnection, friction	Section 8
• Fuses —— burning	Section 8
• Parts —— installation, bolt —— looseness	
• Parts —— deformation	
• Other parts that can be checked visually	
Also add following items at engine start.	
• Indicator, warning lights in combination meter —— ON (indicating abnormality in system) or OFF	Section 8
• Other parts that can be checked visually	

4. PROBLEM SYMPTOM CONFIRMATION

Check if what the customer claimed in CUSTOMER COMPLAINT ANALYSIS is actually found in the vehicle and if that symptom is found, whether it is identified as a failure. (This step should be shared with the customer if possible.)

When the symptom is not actually found, possibility is:

- The symptom occurs under certain conditions.
  —— Retry with the vehicle under different conditions.
- The trouble occurred only temporarily and normal operation has been restored.
  —— Perform DIAGNOSTIC TROUBLE CODE CHECK and if the diagnostic trouble code is indicated, inspect according to the flow table for that DTC.

5. AUTOMATIC TRANSMISSION BASIC CHECK

Perform basic automatic transmission check according to the list below first.

AUTOMATIC TRANSMISSION BASIC CHECK LIST

1. Power Supply Voltage Check
   Check that the battery voltage is within 10 – 14V at engine stop.
2. A/T Fluid Check
   Check A/T fluid level and quality.
3. STALL TEST
   Perform STALL TEST. Refer to STALL TEST in this section for details.
4. LINE PRESSURE TEST
   Perform LINE PRESSURE TEST. Refer to LINE PRESSURE TEST in this section.
5. ROAD TEST
   Perform ROAD TEST to understand correctly the trouble area.
6. Electrical Harness and Coupler Check
   Check the connection of the harness coupler. Check for the loose connection of the harness, loose connection of the terminals.

5-1. DIAGNOSTIC TROUBLE CODE CHECK

Check diagnostic trouble code, referring diagnostic trouble code(s) check in this section.

5-2. DIAGNOSTIC TROUBLE CODE FLOW CHART

Based on the DTC indicated in DIAGNOSTIC TROUBLE CODE CHECK, locate the cause of the trouble, namely in a sensor, switch, wire harness, connector, actuator, TCM or other part and repair or replace faulty parts.

6. FINAL CONFIRMATION TEST

Confirm that the problem symptom has gone and the automatic transmission is free from any abnormal conditions. If what has been repaired is related to the malfunction DTC, clear the DTC once and perform test driving and confirm that a normal code is indicated.

TROUBLE DIAGNOSIS TABLE

NOTE:

For the inspection of throttle position sensor, refer to TP SENSOR in Section 6E of Service Manual mentioned in the FOREWORD of this manual.

Condition		Possible Cause	Correction
No up-shift	1st → 2nd 2nd → 3rd	• A/T VSS or its circuit faulty • Shift solenoid No.1(1st → 2nd, 2nd → 3rd), No.2(1st → 2nd), No.3(2nd → 3rd) or its circuit faulty • TCM faulty	Inspect A/T VSS Repair or replace Replace TCM
	3rd → 4th	• A/T fluid temp. sensor or its circuit faulty • A/T VSS or its circuit faulty • Shift solenoid No.1, No.4 or its circuit faulty • O/D CUT switch and/or "O/D OFF" indicator light circuit faulty • Engine coolant temp. sensor or its circuit faulty • TCM faulty	Inspect A/T fluid temp. sensor Inspect A/T VSS Repair or replace Refer to " O/D CUT SWITCH" in this section and/or inspect its circuit Refer to ECT sensor in SECTION 6E. Replace TCM
No down-shift	4th → 3rd 3rd → 2nd 2nd → 1st	• Shift solenoid No.1(4th → 3rd, 3rd → 2nd, 2nd → 1st), No.2(2nd → 1st), No.3(3rd → 2nd), No.4(4th → 3rd) or its circuit faulty • Throttle position sensor or its circuit faulty • TCM faulty	Repair or replace Inspect TP sensor Replace TCM
Shift point too high or too low		• Throttle position sensor, A/T VSS or its circuit faulty	Inspect TP sensor and/or A/T VSS
Vehicle does not move		• Shift solenoid No.1, No.2, No.3 or its circuit faulty	Repair or replace
Excessive slip		• Shift solenoid No.1 to No.4 or its circuit faulty	Repair or replace
Excessive shock at N → D or N → R		• Shift solenoid No.2, No.3 or its circuit faulty • ECM (ISC)	Repair or replace Inspect ECM
No lock-up or No lock-up OFF		• Lock-up solenoid valve or its circuit faulty • Throttle position sensor or its circuit faulty • Engine coolant temp. sensor or its circuit faulty • Brake light switch circuit faulty • ECM faulty	Repair or replace. Refer to throttle position sensor in Section 6E. Refer to ECT sensor in Section 6E. Repair or replace. Inspect ECM

Condition		Possible Cause	Correction
Vehicle does not move at any range		• Manual valve faulty • Primary regulator valve faulty	Clean or replace Clean or replace
No gear change	1st ⇆ 2nd	• Shift solenoid No.1 and/or No.2 stuck • Signal valve faulty	Clean or replace Clean or replace
	2nd ⇆ 3rd	• Shift solenoid No.1, No.3 and/or fail valve No.1 stuck	Clean or replace
	3rd ⇆ 4th	• Shift solenoid No.1, No.4 and/or fail valve No.2 stuck	Clean or replace
Harsh engagement	P, N → R	• Rear clutch accumulator faulty	Clean or replace
	N → D	• 1st & 2nd brake accumulator faulty	Clean or replace
	1st → 2nd at D range or 2 range	• Rear clutch accumulator faulty	Clean or replace
	2nd → 3rd at D range	• Front clutch accumulator faulty	Clean or replace
	3rd → 4th at D range	• Overdrive brake accumulator faulty	Clean or replace
	All gear change	• Primary regulator valve faulty	Clean or replace
Excessive slip (low line pressure)		• Primary regulator valve faulty	Clean or replace
Vehicle does not move at	1st and 3rd gear	• Front clutch faulty	Repair or replace
	Reverse gear	• Reverse brake faulty	Repair or replace
	2nd, 3rd, 4th and reverse gear	• Rear clutch faulty	Repair or replace
	1st and 2nd gear	• 1st & 2nd brake faulty	Repair or replace
	4th gear	• Overdrive brake faulty	Repair or replace
	Any forward and reverse gear	• Parking lock pawl faulty	Repair or replace
Shock or engine stalls when starting off and stopping		• Torque converter clutch faulty	Inspect and replace as necessary
No up-shift	1st→2nd	• Rear clutch faulty	Repair or replace
	2nd→3rd	• Front clutch faulty	Repair or replace
	3rd→4th	• Overdrive brake faulty	Repair or replace
No engine braking	2nd or 3rd gear	• Front or rear clutch or 1st & 2nd brake faulty	Repair or replace
	L range 1st gear	• Front clutch or 1st & 2nd brake faulty	Repair or replace
No lock-up		• Torque converter clutch faulty • Lock-up control valve faulty • Lock-up solenoid faulty • Secondary regulator valve faulty • Signal valve faulty	Inspect and replace as necessary Clean or replace. Clean or replace. Clean or replace. Clean or replace.
No lock-up OFF		• Lock-up solenoid faulty • Lock-up control valve faulty	Clean or replace. Clean or replace.

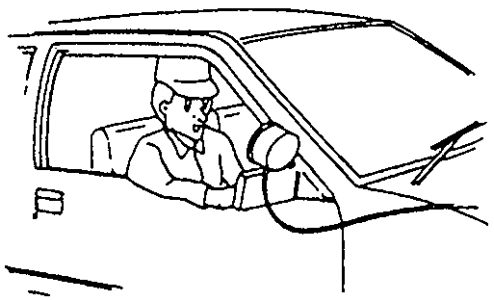

STALL TEST

This test is to check overall performance of automatic transmission and engine by measuring stall speed at "D" and "R" ranges. Be sure to perform this test only when transmission fluid is at normal operating temperature and its level is between FULL and LOW marks.

CAUTION:
- **Do not run engine at stall more than 5 seconds continuously, for fluid temperature may rise excessively high.**
- **After performing stall test, be sure to leave engine running at idle for longer than 30 seconds before another stall test.**

1) Apply parking brake and block wheels.
2) Install tachometer.
3) Start engine with select lever shifted to "P".
4) Depress brake pedal fully.
5) Shift select lever to "D" and depress accelerator pedal fully while watching tachometer. Read engine rpm quickly when it has become constant (stall speed).
6) Release accelerator pedal immediately after stall speed is checked.
7) In the same way, check stall speed in "R" range.
8) Stall speed should be within following specification.

Stall speed: 2,550 – 2,850 r/min

Test result	Possible cause
Lower than standard level	• Lack of engine output • Defective torque converter
Higher than standard level in "D" range	• Malfunctioning 1st & 2nd brake • Malfunctioning rear clutch • Malfunctioning stator one-way clutch
Higher than standard level in "R" range	• Low line pressure • Malfunctioning front clutch • Malfunctioning reverse brake • Malfunctioning stator one-way clutch

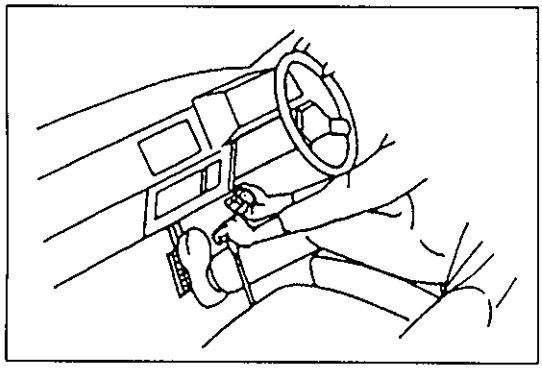

TIME LAG TEST

This test is to check conditions of clutch, reverse brake and fluid pressure. "Time lag" means time elapsed since select lever is shifted with engine idling till shock is felt.

1) With chocks placed in front and behind front and rear wheels respectively, depress brake pedal.
2) Start engine.
3) With stop watch ready, shift select lever from "N" to "D" range and measure time from that moment till shock is felt.
4) Similarly measure time lag by shifting select lever from "N" to "R" range.

Specification for time lag	"N"→"D"	Less than 1.0 sec.
	"N"→"R"	Less than 1.4 sec.

NOTE:

- **When repeating this test, be sure to wait at least minute after select lever is shifted back to "N" range.**
- **Engine should be warmed up fully for this test.**

Test result	Possible cause
When "N"→"D" time lag exceeds specification.	• Low line pressure • Worn front clutch • Worn 1st & 2nd brake
When "N"→"R" time lag exceeds specification.	• Low line pressure • Worn front clutch • Worn reverse brake

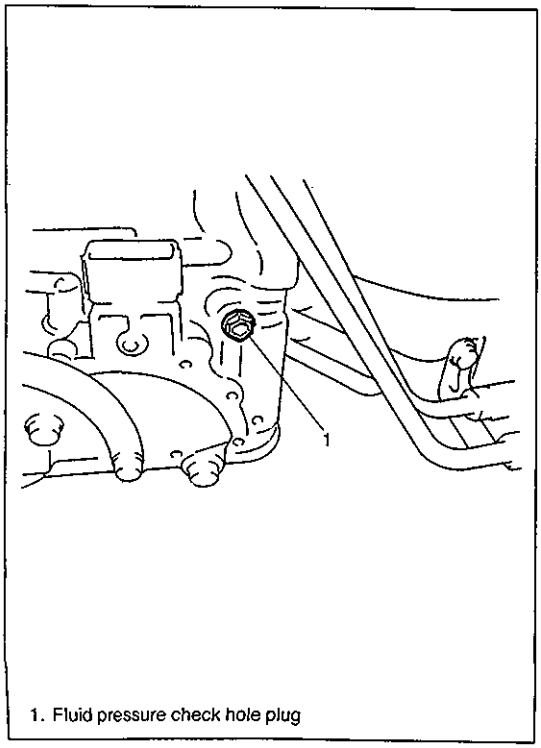

1. Fluid pressure check hole plug

LINE PRESSURE TEST

Purpose of this test is to check operating conditions of each part by measuring fluid pressure in fluid pressure line.
Line pressure test requires following conditions.

- Automatic fluid is at normal operating temperature (70 – 80°C/158 – 176°F).
- Fluid is filled to proper level (between FULL and LOW on dipstick).

1) Apply parking brake securely and place chocks against wheels.
2) Remove fluid pressure check hole plug bolt.
3) Attach oil pressure gauge to fluid pressure check hole in transmission case.

Special Tool
(A) : 09925-37810

CAUTION:
After attaching oil pressure gauge, check that no fluid leakage exists.

4) Depress foot brake fully, run engine at idle and stall then check fluid pressure in "D" or "R" range.

CAUTION:
Do not continue running engine at stall speed longer than 5 seconds.

Engine running mode	Line pressure	
	"D" range	"R" range
At idle speed	8.2 – 9.6 kg/cm^2 116.6 – 136.5 psi	12.6 –15.3 kg/cm^2 179.2 – 217.6 psi
At stall speed	8.2 – 9.6 kg/cm^2 116.6 – 136.5 psi	12.6 –15.3 kg/cm^2 179.2 – 217.6 psi

Test result	Possible cause
Line pressure higher than standard level in each range	• Malfunctioning regulator valve
Line pressure lower than standard level in each range	• Malfunctioning regulator valve • Defective oil pump
Line pressure lower than standard level only in "D" range	• Fluid leakage from "D" range pressure circuit • Fluid leakage from 1st & 2nd brake • Fluid leakage from front clutch
Line pressure lower than standard level only in "R" range	• Fluid leakage from "R" range pressure circuit • Fluid leakage from front clutch • Fluid leakage from reverse brake

ENGINE BRAKE TEST

WARNING:
Before test, make sure that there is no vehicle behind so as to prevent rear-end collision.

1) While driving vehicle in 3rd gear of "D" range, shift select lever down to "2" range and check if engine brake operates.
2) In the same way as in Step 1), check engine brake for operation when select lever is shifted down to "L" range.
3) Engine brake should operate in above test.

Test result	Possible cause
Fails to operate when shifted down to "2" range	• Defective shift switch
Fails to operate when shifted down to "L" range	• 1st & 2nd brake defective • Defective A/T

"P" RANGE TEST

1) Stop vehicle on a slope, shift select lever to "P" range and at the same time apply parking brake.
2) After stopping engine, depress brake pedal and release parking brake.
3) Then, release brake pedal gradually and check that vehicle remains stationary.
4) Depress brake pedal and shift select lever to "N" range.
5) Then, release brake pedal gradually and check that vehicle moves.

WARNING:
Before test, check to make sure no one is around vehicle or down on a slope and keep watchful for safety during test.

Test result	Possible cause
Vehicle moves at "P" range or remains stationary at "N" range	Defective parking lock pawl or spring

ELECTRONIC CONTROL SYSTEM DIAGNOSIS

TCM has on-board diagnostic system (a system self-diagnosis function).
Investigate where the trouble is by referring to “DIAGNOSTIC FLOW TABLE” and ”DIAGNOSTIC TROUBLE CODE TABLE” on later pages.

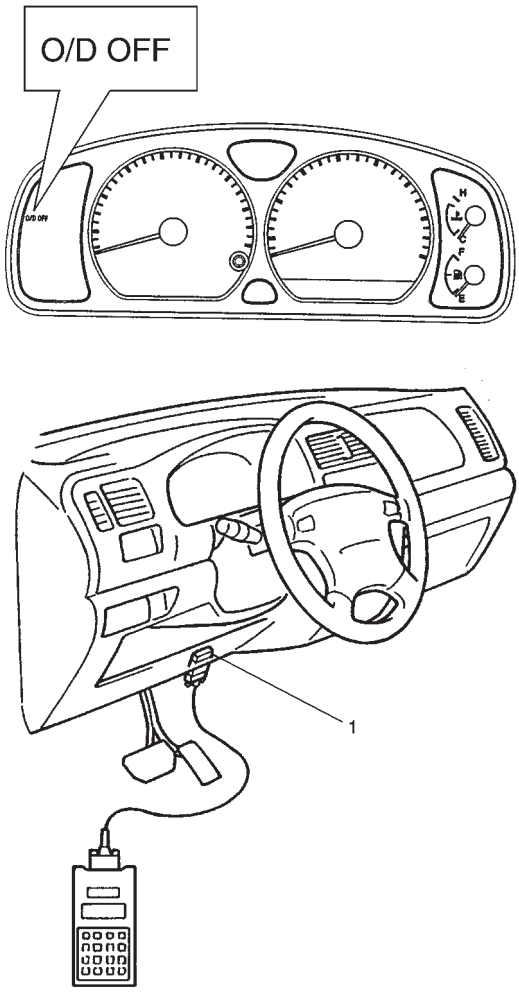

1. Data link connector (DLC)

PRECAUTIONS IN DIAGNOSING TROUBLES

[PRECAUTIONS IN IDENTIFYING DIAGNOSTIC TROUBLE CODE]

- Before identifying diagnostic trouble code indicated by “O/D OFF” light, don’t disconnect couplers from TCM, battery cable from battery, TCM ground wire harness from engine. Such disconnection will erase memorized trouble in TCM memory.
- The DTC stored in the TCM memory is output by flashing of “O/D OFF” light with the diagnosis switch terminal grounded.
- If no DTC is stored in the TCM memory, Code 12 is output repeatedly.
- If DTCs are stored in the TCM memory, they are output after Code 12 output starting from the smallest code number in the increasing order. After all DTCs are output, Code 12 is output again and so are DTCs.
- When replacing TCM with used one, learning control memory in TCM should be initialized after the replacement referring to “LEARNING CONTROL MEMORY INITIALIZATION” in this section.

[INTERMITTENT TROUBLES] and [NOTES ON SYSTEM CIRCUIT INSPECTION]
Refer to SECTION 0A.

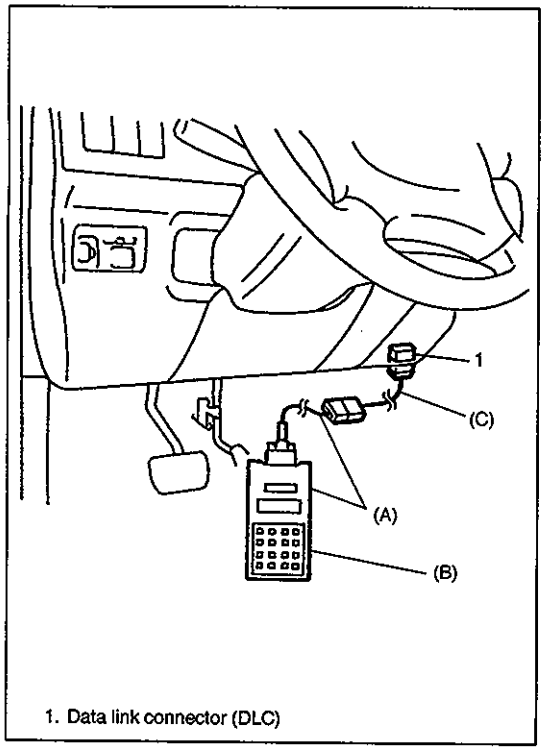

1. Data link connector (DLC)

DIAGNOSTIC TROUBLE CODE(S) CHECK

[Check DTC with SUZUKI scan tool]

1) Turn ignition switch OFF.
2) After setting cartridge to connect SUZUKI scan tool to data link connector (DLC) located on underside of instrument panel at driver's seat side.

   Special Tool
   (A): 09931-76011 (SUZUKI scan tool)
   (B): Mass storage cartridge
   (C): 09931-76030 (16/14 pin DLC cable)

3) Turn ignition switch ON.
4) Read DTC according to instructions displayed on SUZUKI scan tool and print it or write it down. Refer to SUZUKI scan tool operator's manual for further details.
5) After completing the check, turn ignition switch OFF and disconnect SUZUKI scan tool from data link connector (DLC).

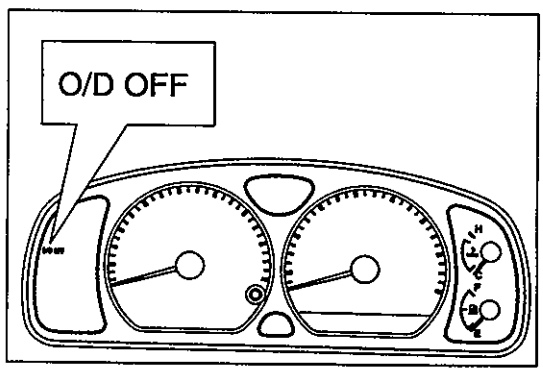

[Check DTC without SUZUKI scan tool]

1) Turn ignition switch ON and make sure that O/D OFF light is OFF in combination meter (O/D cut switch OFF).

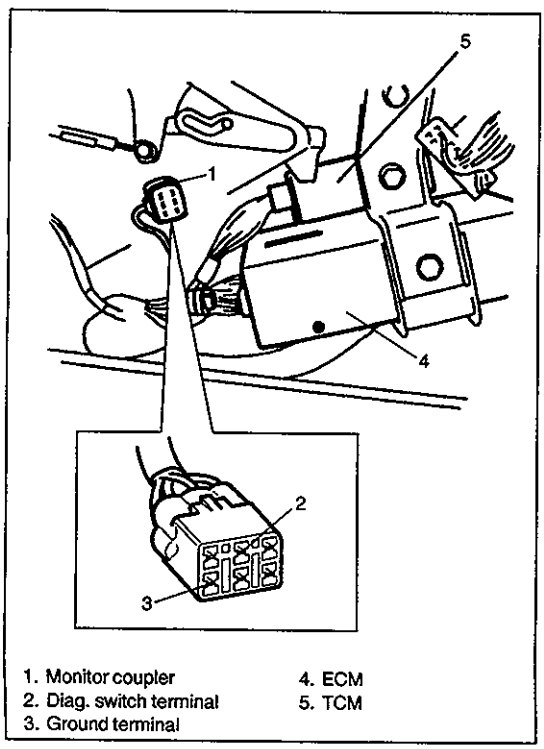

1. Monitor coupler
2. Diag. switch terminal
3. Ground terminal
4. ECM
5. TCM

2) Turn ignition switch OFF.
3) Using service wire, ground diagnosis switch terminal of monitor coupler.

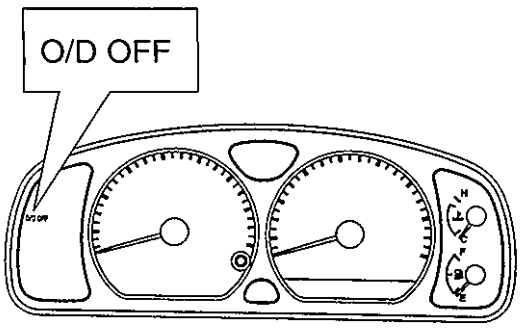

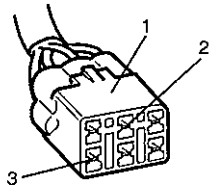

1. Monitor coupler
2. Diag. switch terminal
3. Ground terminal

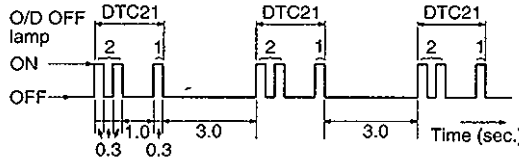

4) Read DTC from flashing pattern of O/D OFF light.
5) After completing the DTC check, turn ignition switch OFF and disconnect service wire from monitor coupler.

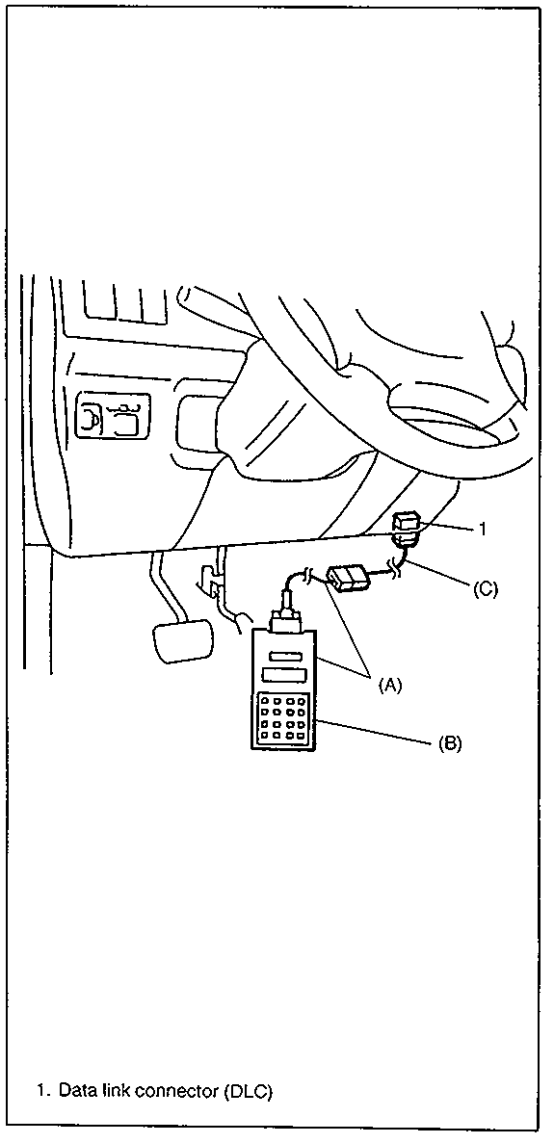

1. Data link connector (DLC)

HOW TO CLEAR DIAGNOSTIC TROUBLE CODE(S) (DTC)

[Clear DTC with SUZUKI scan tool]

1) Turn ignition switch OFF.
2) After setting cartridge to SUZUKI scan tool connect it to data link connector (DLC) located on underside of instrument panel at driver's seat side.

   Special Tool
   (A): 09931-76011 (SUZUKI scan tool)
   (B): Mass storage cartridge
   (C): 09931-76030 (16/14 pin DLC cable)

3) Turn ignition switch ON.
4) Erase DTC according to instructions displayed on SIZUKI scan-tool. Refer to SUZUKI scan tool operator's manual for further details.
5) After completing the check, turn ignition switch OFF and disconnect SUZUKI scan tool from data link connector (DTC).

[Clear DTC without SUZUKI scan tool]

1) Turn ignition switch ON.
2) Using service wire ground diagnosis switch terminal of monitor coupler five times within 10 seconds.
3) Perform "DTC check" and confirm that only DTC 12 (normal DTC) is displayed. If not repeat step 1) and 2) and check again.

DIAGNOSTIC TROUBLE CODE (DTC) TABLE

EXAMPLE: SHIFT SOLENOID No.1 FAILURE (CODE No. 21)

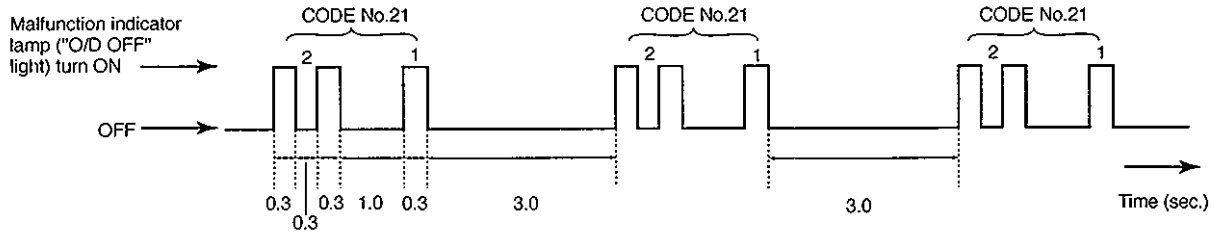

DTC	"O/D OFF" Light Flashing Pattern	DIAGNOSTIC ITEMS
12		Normal
14		Turbine rev. sensor signal circuit
18		Turbine rev. sensor signal circuit, A/T VSS signal circuit or automatic transmission itself
21/22	/	Shift solenoid No.1 circuit
23/24	/	Shift solenoid No.2 circuit
43/44	/	Shift solenoid No.3 circuit
45/46	/	Shift solenoid No.4 circuit
25/26	/	Lock-up solenoid circuit
31		A/T VSS signal circuit
32/33	/	Throttle opening signal circuit
34		Shift switch circuit
35		Engine rev. signal circuit
36		A/T fluid temperature signal circuit
52		Power source relay in TCM

TCM POWER AND GROUND CIRCUIT CHECK
(AUTOMATIC TRANSMISSION DOESN'T SHIFT TO 1ST GEAR AT VEHICLE START IN "D" RANGE)

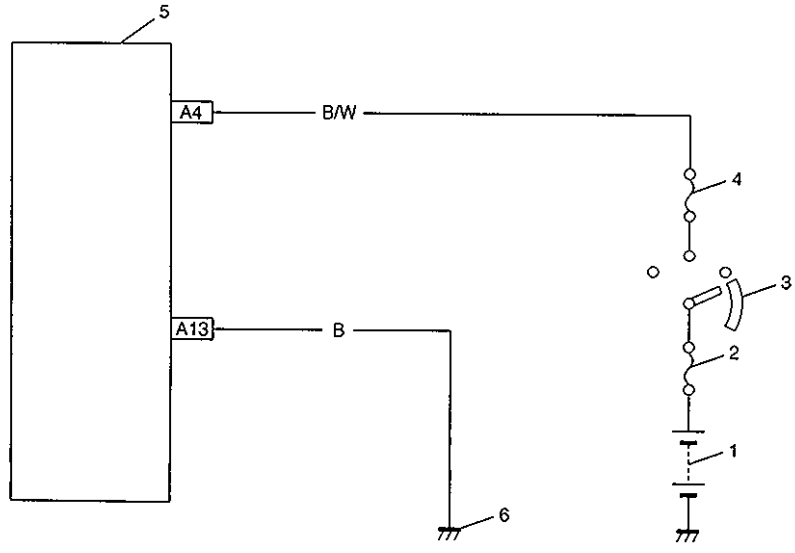

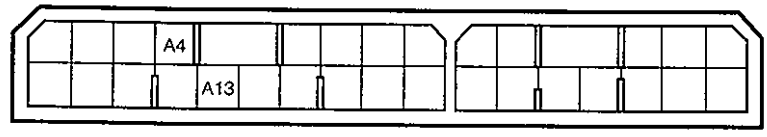

Terminal arrangement of TCM coupler
(Viewed from harness side)

1. Battery
2. Main fuse
3. Ignition switch
4. Circuit fuse (IG)
5. TCM
6. Ground

STEP	ACTION	YES	NO
1	Check voltage between terminal "A4" of TCM coupler and body ground with ignition switch ON. Is it 10 – 14V?	Go to Step 2.	"B/W" wire open.
2	Check voltage between terminal "A13" of TCM coupler and body ground with ignition switch ON. Is it about 0V?	Poor "A4" or "A13" connection. If all above are OK, replace known-good TCM and recheck.	"B" wire open.

DTC 14 – TURBINE REV. SENSOR SIGNAL (INPUT SIGNAL TOO HIGH OR TOO LOW)

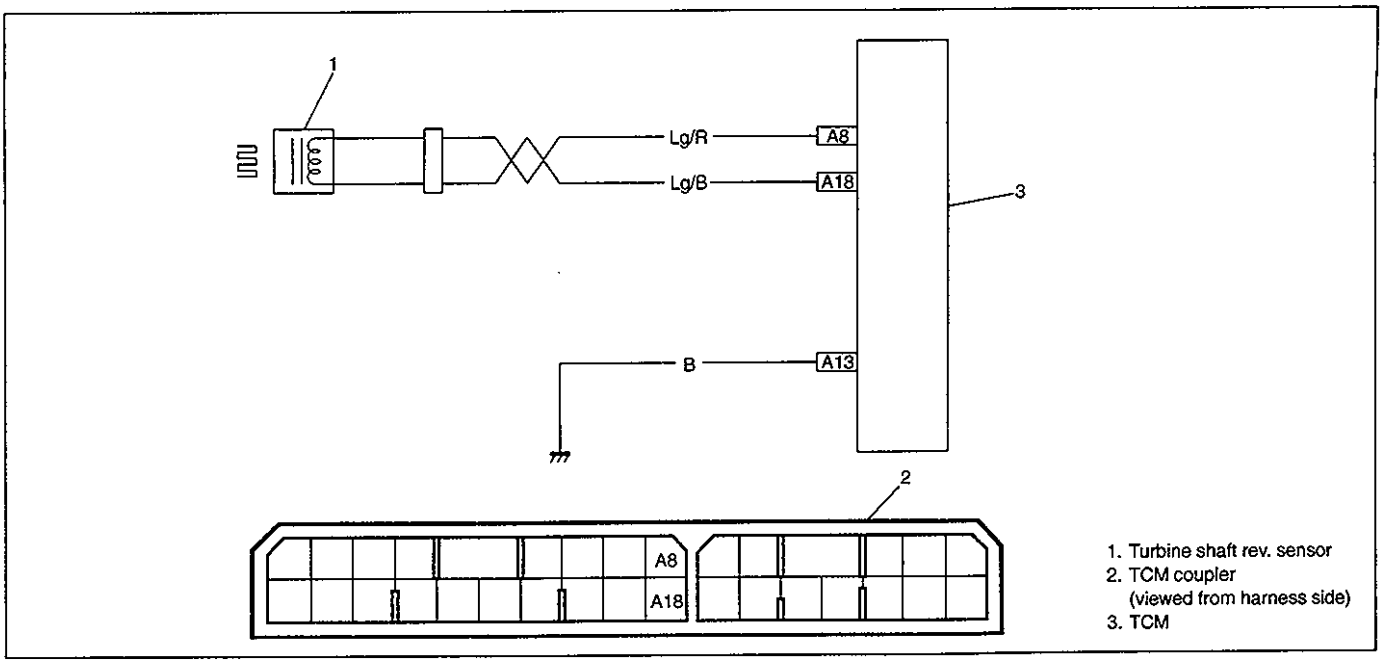

1. Turbine shaft rev. sensor
2. TCM coupler (viewed from harness side)
3. TCM

STEP	ACTION	YES	NO
1	1) Turn ignition switch OFF and disconnect A/T VSS – turbine rev. sensor coupler. 2) Measure resistance between terminals of the disconnected sensor side coupler. Is it 160-200 Ω? (Figure 1)	Go to Step 2.	Replace turbine rev. sensor.
2	1) Connect A/T VSS – turbine rev. sensor coupler then disconnect TCM couplers. 2) Measure resistance between terminal "A8" and "A18" of disconnected harness side coupler. Is it 160-200 Ω?	Go to Step 3.	Broken "Lg/R" or "Lg/B" wire or shorted to each other.
3	1) Turn ignition switch OFF and connect turbine rev. sensor coupler then disconnect TCM couplers. 2) Measure resistance between terminal "A8" (of disconnected harness side coupler) and body ground then terminal "A18" (of disconnected harness side coupler) and body ground. Are they about 0 Ω? (Figure 2)	Short in between "Lg/R" wire to ground or "Lg/B" wire to ground.	Poor connection of terminal "A8" or "A18" of TCM. If all the above are in good condition, the cause can be a "temporary malfunction" of the TCM.

Figure 1

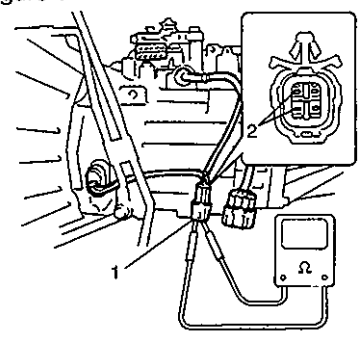

1. A/T VSS – turbine rev. sensor coupler
2. Turbine rev. sensor terminal

Figure 2

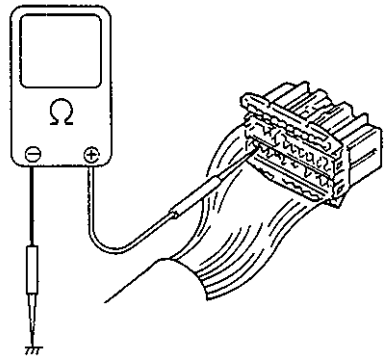

DTC 18 – TURBINE REV. SENSOR, A/T VSS OR A/T ITSELF (INPUT VEHICLE SPEED TOO HIGH OR TOO LOW COMPARING TO TURBINE REV. SENSOR SIGNAL)

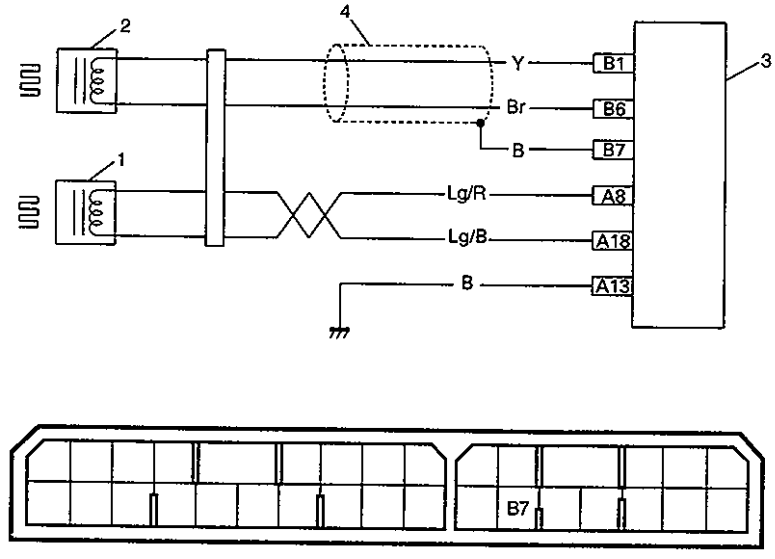

1. Turbine shift rev. sensor
2. A/T VSS
3. TCM
4. Shield wire

STEP	ACTION	YES	NO
1	Check if DTC 18 displayed with DTC 14 or 31. Is DTC 18 displayed with DTC 14 or 31? (Figure 1)	Inspect according to DTC 14 or 31 flow table first.	Go to Step 2.
2	1) Turn ignition switch OFF and disconnect TCM couplers. 2) Measure resistance between terminal "B7" of the disconnected harness side coupler and body ground. Is it about 0 Ω? (Figure 2)	Short in between shield portion or "B" wire and ground.	Go to Step 3.
3	Check turbine rev. sensor and A/T VSS referring to each item in this section. Are they OK? (Figure 3)	• Broken wire in shield portion or broken "B" wire, or shorted to power source circuit. • Malfunction of A/T itself (clutch slipping, etc.) If all the above are in good condition, the cause can be a "temporary malfunction" of the TCM.	Inspect and replace referring to each item in this section.

Figure 1

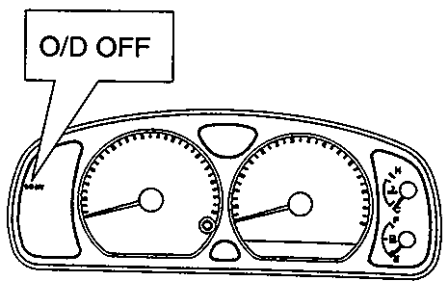

Figure 2

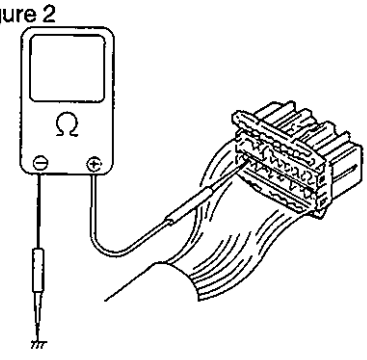

Figure 3

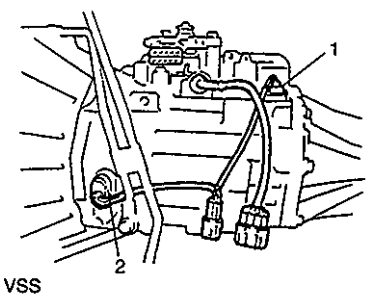

1. A/T VSS
2. Turbine rev. sensor

DTC 21 – SHIFT SOLENOID NO.1
23 – SHIFT SOLENOID NO.2
43 – SHIFT SOLENOID NO.3
45 – SHIFT SOLENOID NO.4
25 – LOCK-UP SOLENOID
(SOLENOID OUTPUT VOLTAGE TOO HIGH EVEN THOUGH TCM ORDERS SOLENOID TO TURN OFF)

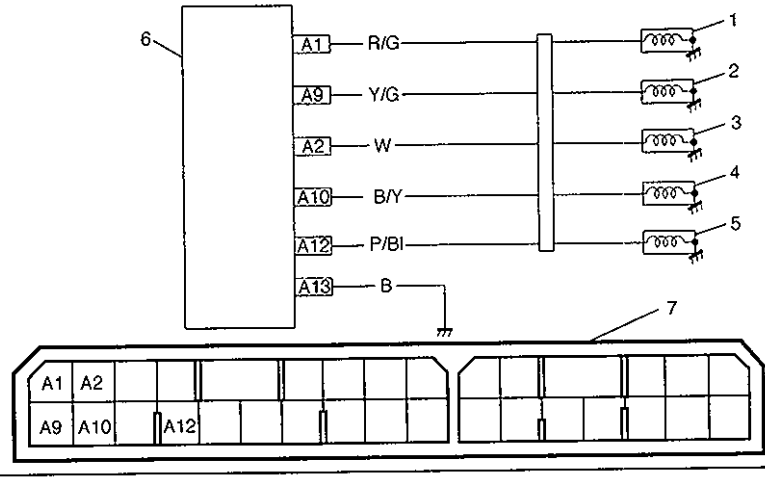

1. Shift solenoid No.1
2. Shift solenoid No.2
3. Shift solenoid No.3
4. Shift solenoid No.4
5. Lock-up solenoid
6. TCM
7. TCM coupler (viewed from harness side)

STEP	ACTION	YES	NO
1	1) Turn ignition switch OFF and disconnect solenoid coupler. 2) Measure the resistance between each solenoid terminal of the solenoid side coupler and transmission ground. Is it about 12 Ω? (Figure 1)	Go to Step 2.	• Broken solenoid lead wire. • Malfunction of solenoid.
2	1) Connect solenoid coupler then disconnect TCM couplers. 2) Measure the resistance between each solenoid terminal of the disconnected harness side TCM coupler and body ground. Is it about 12 Ω? (Figure 2)	Go to Step 3.	Broken "R/G", "Y/G", "W", "B/Y" or "P/BI" wire or poor connection of shift solenoid coupler.
3	Turn ignition switch ON then measure voltage between terminal "A1", "A2", "A9", "A10" or "A12" of disconnected harness side TCM coupler and body ground. Is it about 0V?	Poor connection at terminal "A1", "A2", "A9", "A10" or "A12"of TCM. If all the above are in good condition, the cause can be a "temporary malfunction" of the TCM.	"R/G", "Y/G", "W", "B/Y" or "P/BI" wire or shift solenoid lead wire shorted to power source circuit.

Solenoid	Terminal Number	Lead Wire Color	Terminal Number of Shift Solenoid Coupler (shift solenoid side)
Shift solenoid No.1	A1	R/G	3
Shift solenoid No.2	A9	Y/G	4
Shift solenoid No.3	A2	W	5
Shift solenoid No.4	A10	B/Y	6
Lock-up solenoid	A12	P/BI	1

Figure 1

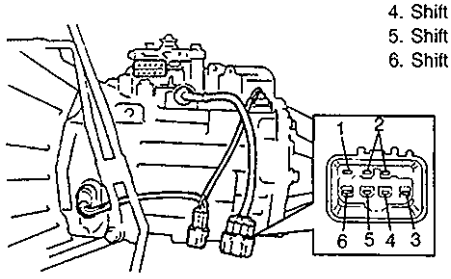

1. Lock-up solenoid terminal
2. A/T fluid temp. sensor terminal
3. Shift solenoid No.1 terminal
4. Shift solenoid No.2 terminal
5. Shift solenoid No.3 terminal
6. Shift solenoid No.4 terminal

Figure 2

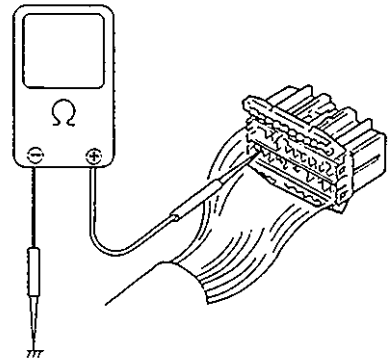

DTC 22 – SHIFT SOLENOID NO.1
24 – SHIFT SOLENOID NO.2
44 – SHIFT SOLENOID NO.3
46 – SHIFT SOLENOID NO.4
26 – LOCK-UP SOLENOID
(SOLENOID OUTPUT VOLTAGE TOO LOW EVEN THOUGH TCM ORDERS SHIFT SOLENOID TO TURN ON)

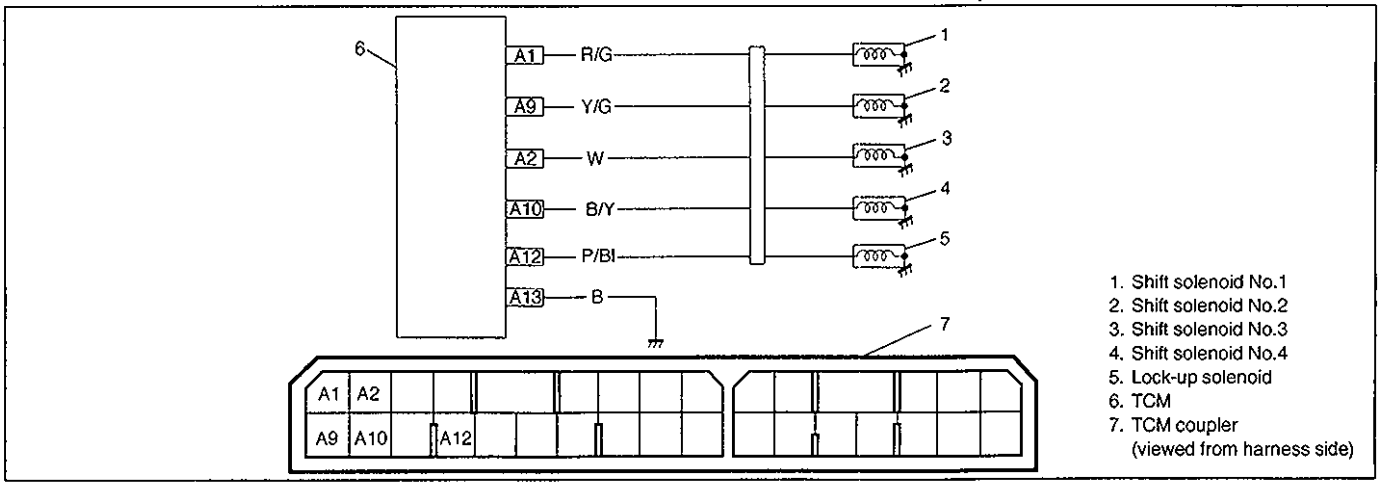

STEP	ACTION	YES	NO
1	1) Turn ignition switch OFF and disconnect shift solenoid coupler. 2) Measure the resistance between each solenoid terminal of the solenoid side coupler and transmission ground. Is it about 12 Ω? (Figure 1)	Go to Step 2.	• Short in between solenoid lead wire and ground • Malfunction of solenoid.
2	1) Disconnect TCM couplers. 2) Measure the resistance between terminal "A1", "A2", "A9", "A10" or "A12" of the disconnected harness side TCM coupler and body ground. Is it about 0Ω? (Figure 2)	Short in between "R/G","Y/G", "W", "B/Y" or "P/BI" wire and ground.	The cause can be a "temporary malfunction" of the TCM.

Solenoid	Terminal Number	Lead Wire Color	Terminal Number of Shift Solenoid Coupler (shift solenoid side)
Shift solenoid No.1	A1	R	1
Shift solenoid No.2	A9	Y	2
Shift solenoid No.3	A2	W	3
Shift solenoid No.4	A10	B/BI	4
Lock-up solenoid	A12	P/BI	5

Figure 1

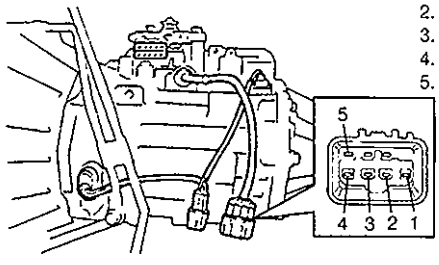

1. Shift solenoid No.1 terminal
2. Shift solenoid No.2 terminal
3. Shift solenoid No.3 terminal
4. Shift solenoid No.4 terminal
5. Lock-up solenoid terminal

Figure 2

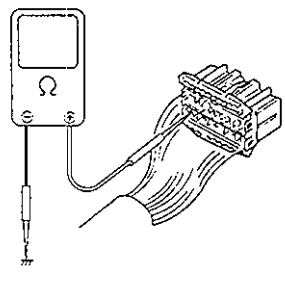

DTC 31 – A/T VEHICLE SPEED SENSOR (A/T VSS) (INPUT VOLTAGE TOO HIGH OR TOO LOW)

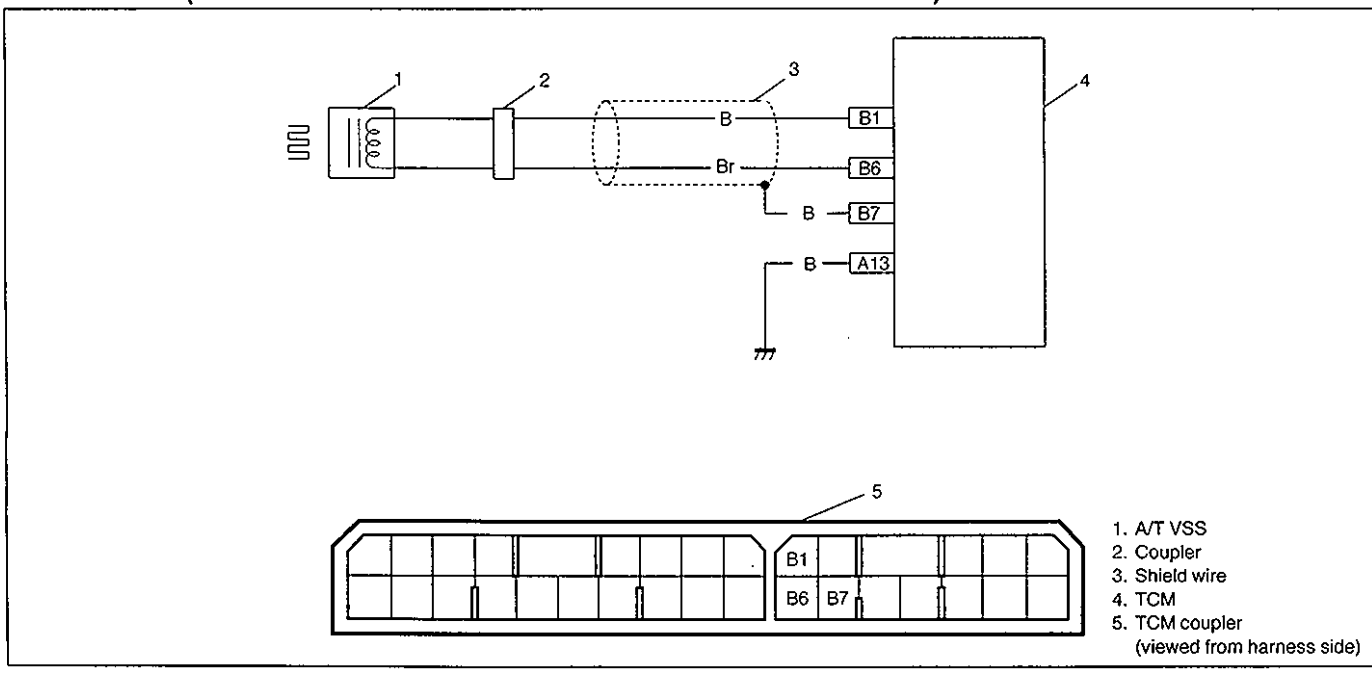

STEP	ACTION	YES	NO
1	1) Turn ignition switch OFF and disconnect A/T VSS – turbine rev. sensor coupler. (Figure1) 2) Measure resistance between terminals of disconnected sensor side coupler. Is it 160 – 200 Ω? (Figure 2)	Go to Step 2.	Replace A/T VSS.
2	1) Connect A/T VSS coupler then disconnect TCM couplers. 2) Measure resistance between terminal "B1" and "B6" of disconnected harness side coupler. Is it 160 – 200 Ω? (Figure 4)	Go to Step 3.	Broken "Y" or "Br" wire or shorted to each other.
3	1) Turn ignition switch OFF and disconnect A/T VSS – turbine rev. sensor coupler. (Figure 1) 2) Measure resistance between terminal "3" (of disconnected sensor side coupler) - body ground then terminal "4" (of disconnected sensor side coupler) - body ground. Is it about 0 Ω? (Figure 3)	Replace A/T VSS.	Go to Step 4.

STEP	ACTION	YES	NO
4	1) Turn ignition switch OFF and connect A/T VSS coupler then disconnect TCM couplers. 2) Measure resistance between terminal "B1"(of disconnected harness side coupler) - body ground then terminal "B6" (of disconnected harness side coupler) - body ground. Is it about 0 Ω? (Figure 5)	Short in between "Y" wire and ground or "Br" wire and ground.	Go to Step 5.
5	Measure resistance between terminal "B1" - "B7" (of disconnected harness side coupler) then terminal "B6" - "B7" (of disconnected harness side coupler). Is it about 0 Ω? (Figure 4)	"Y" wire or "Br" wire shorted to shield portion.	Poor connection of terminal "B1" or "B6" of the TCM. If all the above are in good condition, the cause can be a temporary malfunction of the TCM or the TCM itself.

Figure 1

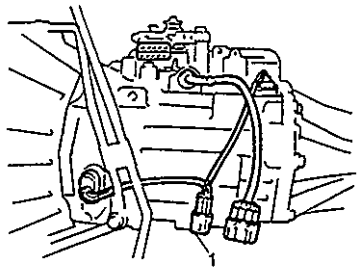

1. A/T VSS – turbine rev. sensor coupler

Figure 2

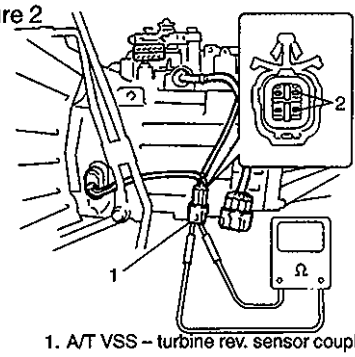

1. A/T VSS – turbine rev. sensor coupler
2. A/T VSS terminals

Figure 3

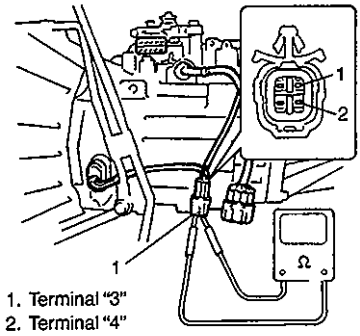

1. Terminal "3"
2. Terminal "4"

Figure 4

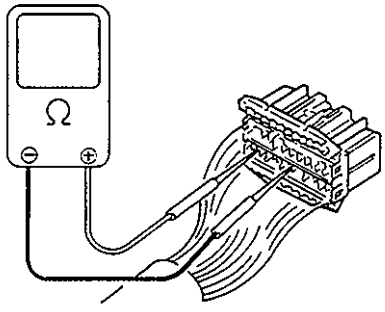

Figure 5

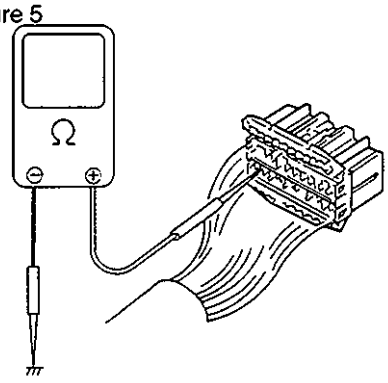

DTC 32 – THROTTLE POSITION SIGNAL
(THROTTLE OPENING SIGNAL OF OVER 100% INPUTTED)

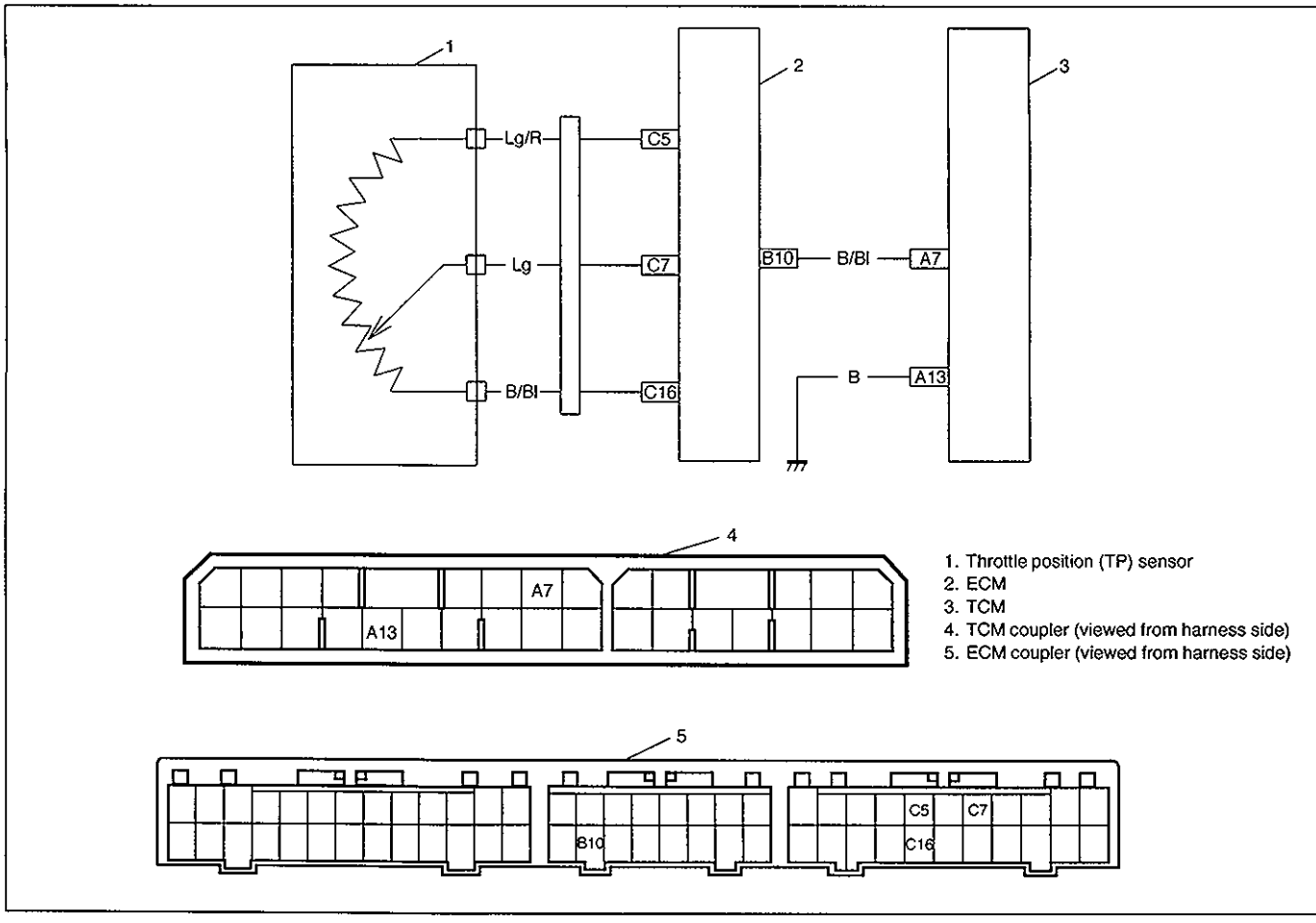

1. Throttle position (TP) sensor
2. ECM
3. TCM
4. TCM coupler (viewed from harness side)
5. ECM coupler (viewed from harness side)

STEP	ACTION	YES	NO
1	1) Check throttle opening signal referring to Section 6E. Is it OK?	Intermittent trouble or faulty TCM. Recheck referring to "Intermittent trouble" in Section 0B.	Go to Step 2.
2	Check DTC of electronic fuel injection system referring to Section 6E. Does the DTC show code 12?	Go to Step 3.	Inspect and repair referring to DTC flow table of electronic fuel injection system in Section 6E.
3	1) Turn ignition switch OFF and disconnect TCM and ECM couplers. 2) Check resistance between terminal "A7" of disconnected harness side TCM coupler and body ground. Is it infinity?	Go to Step 4.	"B/Bl" wire shorted to ground.
4	1) Turn ignition switch OFF and connect TCM couplers. 2) Turn ignition switch ON and check voltage between terminal "B10" of disconnected harness side ECM coupler and body ground. Is it 10 – 14 V?	Intermittent trouble or faulty ECM. Substitute a known-good ECM and recheck.	Substitute a known-good TCM and recheck.

DTC 33 – THROTTLE POSITION SIGNAL
(THROTTLE OPENING SIGNAL OF UNDER 0% INPUTTED OR INPUT SIGNAL FIXED TO HIGH (12V) OR LOW (0V))

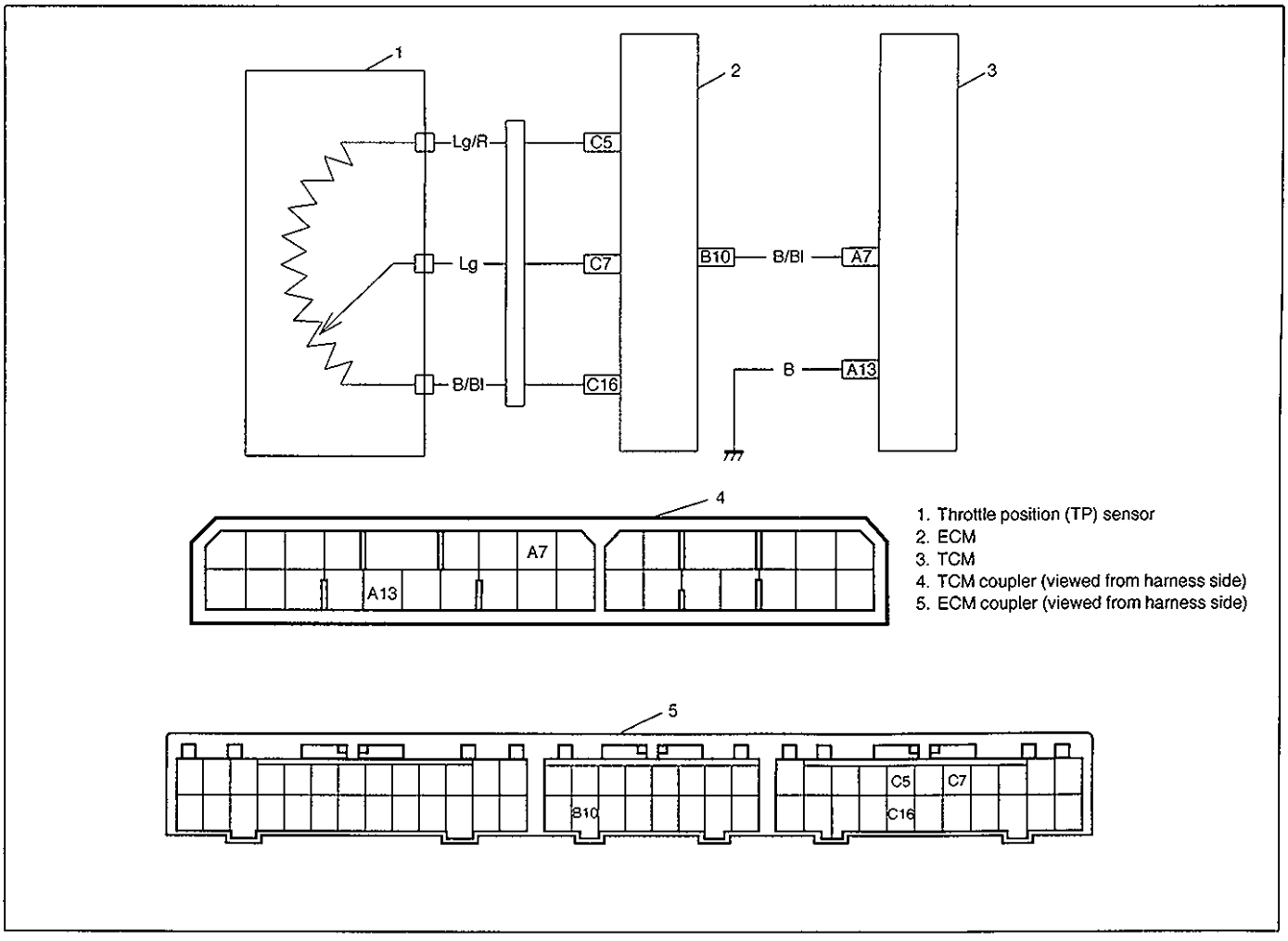

1. Throttle position (TP) sensor
2. ECM
3. TCM
4. TCM coupler (viewed from harness side)
5. ECM coupler (viewed from harness side)

STEP	ACTION	YES	NO
1	1) Check throttle opening signal referring to Section 6E. Is it OK?	Intermittent trouble or faulty TCM. Recheck referring to "Intermittent trouble" in Section 0B.	Go to Step 2.
2	Check DTC of electronic fuel injection system referring to Section 6E. Does the DTC show code 12?	Go to Step 3.	Inspect and repair referring to DTC table of electronic fuel injection system in Section 6E.
3	1) Turn ignition switch OFF and disconnect ECM couplers. 2) Turn ignition switch ON and check voltage between terminal "B10" of disconnected harness side ECM coupler and body ground. Is it 10 – 14 V?	Poor connection of terminal "B10" of ECM coupler. If connection is OK, substitute a known-good ECM and recheck.	"B/Bl" wire open or poor "A7" connection of TCM coupler. If wire and connection are OK, substitute a known-good TCM and recheck.

DTC 34 – SHIFT SWITCH
(NO SHIFT SWITCH SIGNAL INPUTTED OR TWO OR MORE SHIFT SWITCH SIGNALS INPUTTED AT THE SAME TIME)

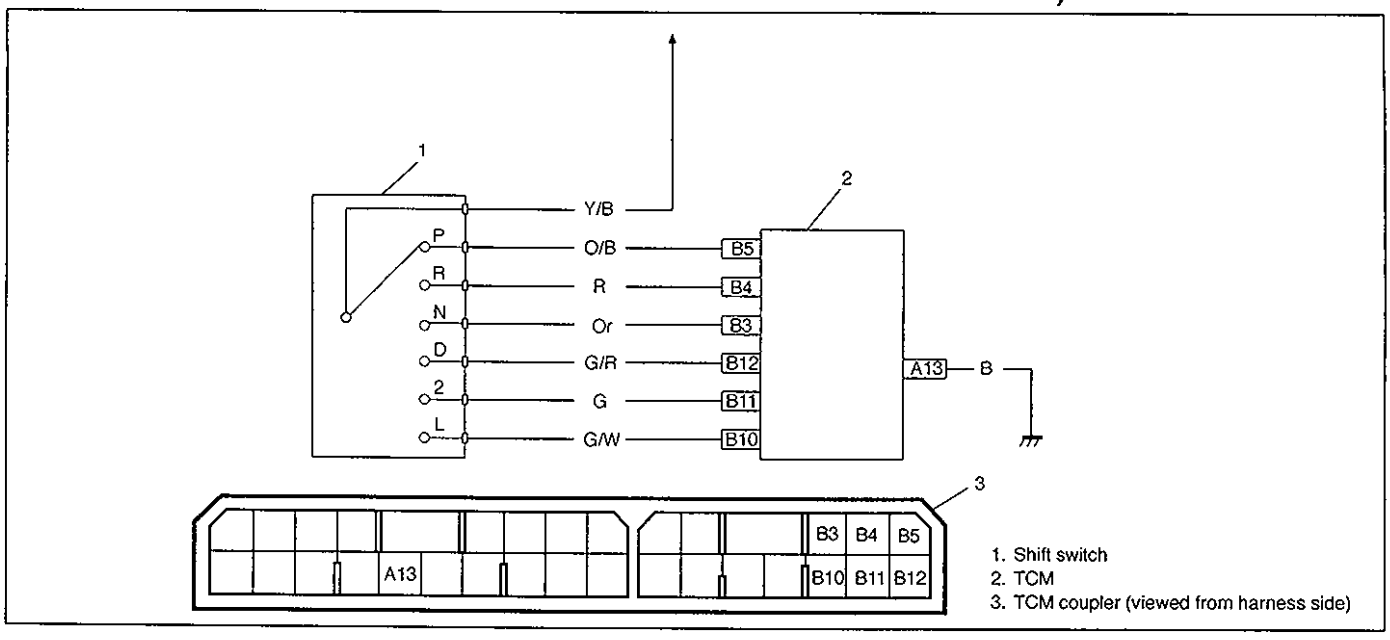

STEP	ACTION	YES	NO
1	1) Turn ignition switch OFF, disconnect TCM coupler. 2) Turn ignition switch ON, check voltage between terminal "B5" and "A13" of disconnected harness side TCM coupler. Is it 10 – 14 V at "P" range and 0 V at other range?	Go to Step 2.	Go to Step 7.
2	While ignition switch ON, check voltage between terminal "B4" and "A13" of disconnected harness side TCM coupler. Is it 10 – 14 V at "R" range and 0 V at other range?	Go to Step 3.	Go to Step 7.
3	While ignition switch ON, check voltage between terminal "B3" and "A13" of disconnected harness side TCM coupler. Is it 10 – 14 V at "N" range and 0 V at other range?	Go to Step 4.	Go to Step 7.
4	While ignition switch ON, check voltage between terminal "B12" and "A13" of disconnected harness side TCM coupler. Is it 10 – 14 V at "D" range and 0V at other range?	Go to Step 5.	Go to Step 7.
5	While ignition switch ON, check voltage between terminal "B11" and "A13" of disconnected harness side TCM coupler. Is it 10 – 14 V at "2" range and 0 V at other range?	Go to Step 6.	Go to Step 7.

STEP	ACTION	YES	NO
6	While ignition switch ON, check voltage between terminal"B10" and "A13" of disconnected harness side TCM coupler. Is it 10 – 14 V at "L" range and 0 V at other range?	Intermittent trouble or faulty TCM. Check for intermittent trouble referring to "Intermittent troubles" in Section 0B.	Go to Step 7.
7	Check shift switch referring in this section. Is it OK? (Figure 1)	Shift switch wire shorted. If wire harnesses are OK, substitute a known-good TCM and recheck.	Replace shift switch.

Figure 1

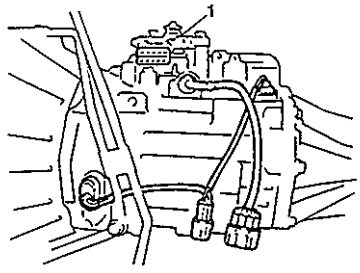

1. Shift switch

DTC 35 – ENGINE REV. SIGNAL

(NO ENGINE REV. SIGNAL INPUTTED EVEN THOUGH STANDARD VALUE OF VEHICLE SPEED SIGNAL AND THROTTLE OPENING SIGNAL INPUTTED)

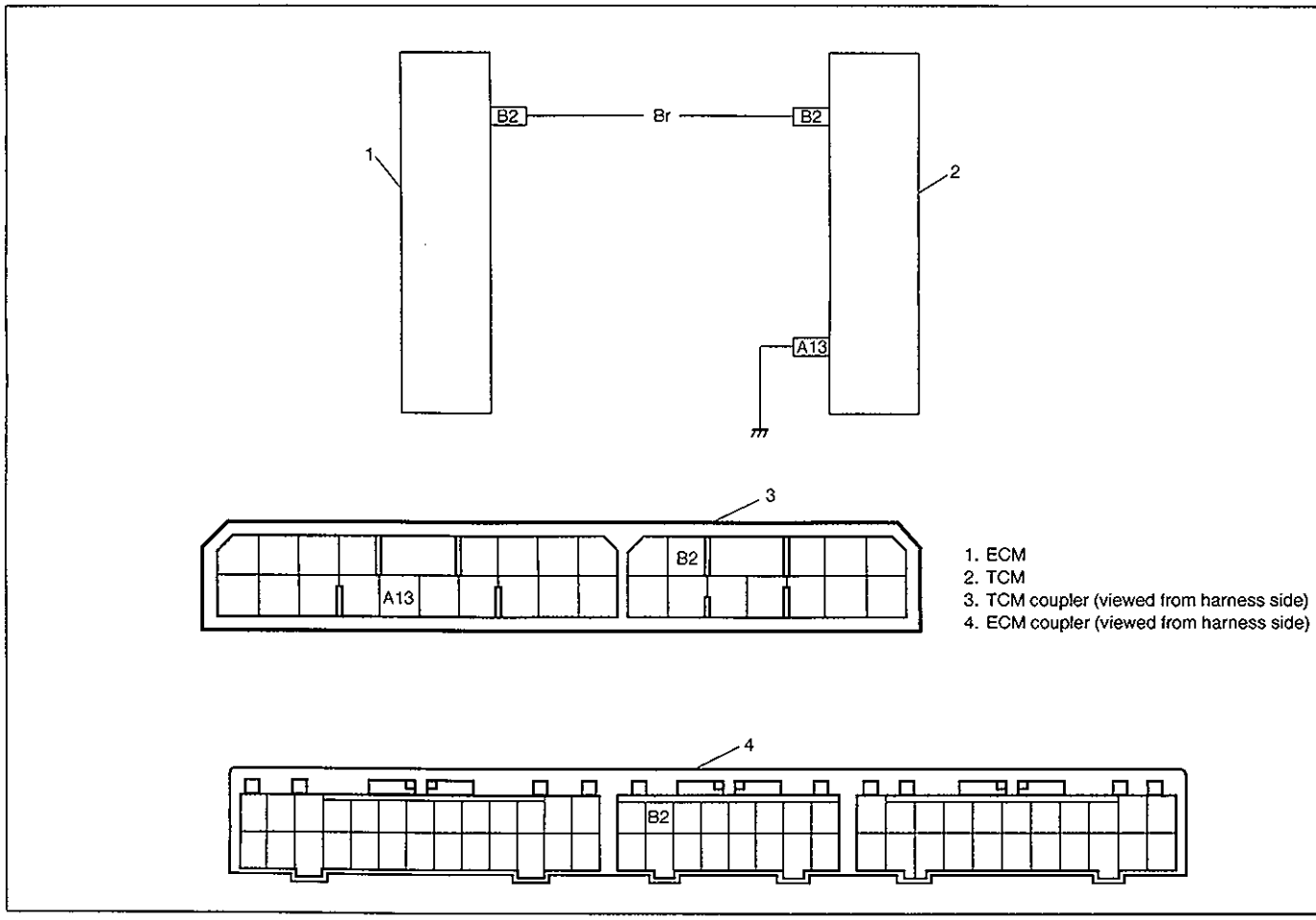

STEP	ACTION	YES	NO
1	1) Turn ignition switch OFF and Disconnect TCM couplers. 2) Turn ignition switch ON and Measure voltage between terminal "B2" of TCM and body ground. (Figure 1) Is it about 12 V?	Check connection of ECM and TCM couplers. If they are OK, go to Step 2.	"Br" wire is shorted to ground or poor connection of "B2" terminal of ECM.
2	1) Check noise suppressor, ignition coil assembly and their circuits referring to SECTION 6F. Are they OK?	Intermittent trouble or faulty ECM or TCM. Substitute a known-good ECM or TCM and recheck.	Inspect and repair referring to each item in Section 6F.

Figure 1

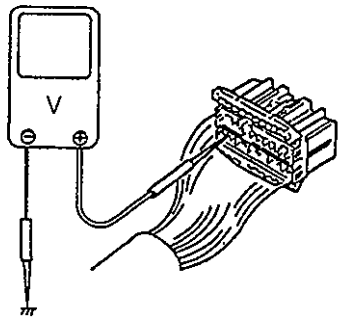

DTC 36 – A/T FLUID TEMPERATURE SIGNAL
(A/T FLUID TEMPERATURE SIGNAL INPUT VOLTAGE DOES NOT GO DOWN EVEN THOUGH STANDARD VALUE OF ENGINE REV. SIGNAL INPUTTED)

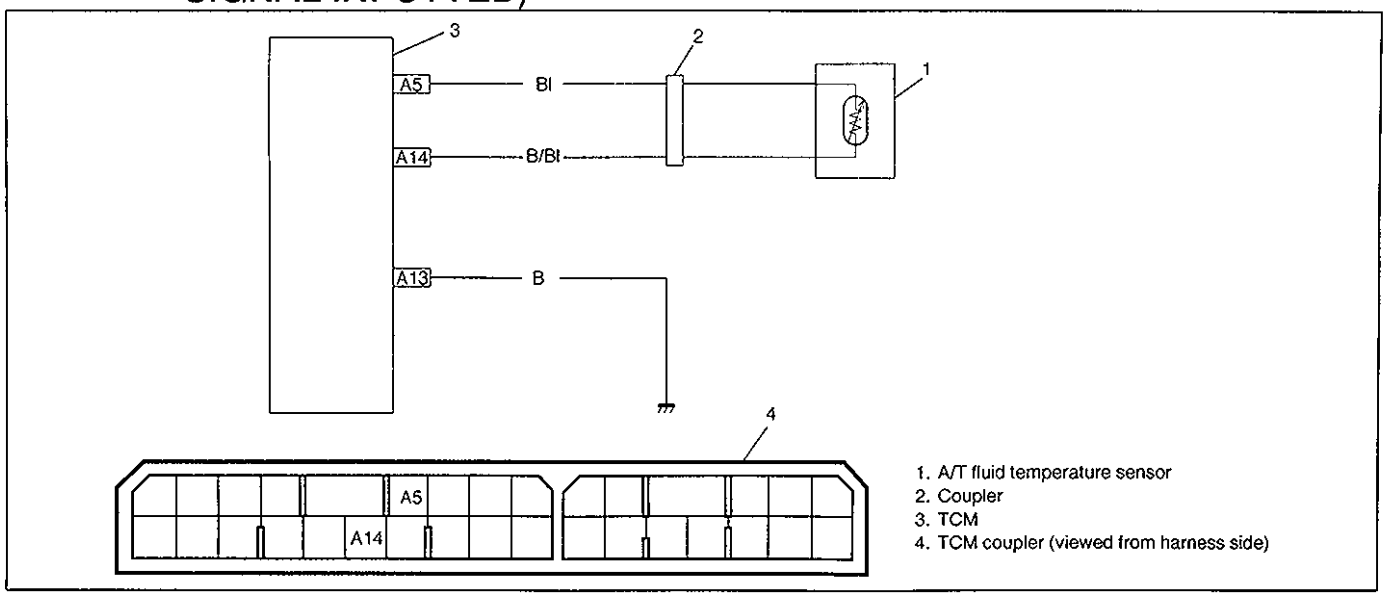

STEP	ACTION	YES	NO
1	1) Turn ignition switch OFF and disconnect solenoid wire harness coupler. 2) Turn ignition switch ON then measure voltage between "Bl" wire terminal of disconnected harness side coupler and engine ground. (Figure 1) Is it about 5V?	Go to Step 2.	• Broken Blue lead wire or shorted to 12V power source. • Poor connection of "A5" terminal at TCM. If all the above are in good condition, substitute a known-good TCM and re-start the troubleshooting.
2	1) Turn ignition switch OFF and connect solenoid wire harness coupler. 2) Turn ignition switch ON then measure voltage between "B/Bl" lead wire terminal of solenoid wire harness coupler and engine ground (with coupler connected). Is it about 5V?	Broken "B/Bl" lead wire or poor connection of "A14" terminal at TCM. If all the above are in good condition, substitute a known-good TCM and restart the troubleshooting.	Go to Step 3.
3	Check A/T fluid temperature sensor referring to A/T FLUID TEMPERATURE SENSOR INSPECTION in this section. Is it OK?	Short in between Blue lead wire and 5V power source or short in between A/T fluid temp. sensor lead wire and 5V power source. If all the above are in good condition, the cause can be a temporary malfunction of the TCM.	Replace A/T fluid temperature sensor.

Figure 1

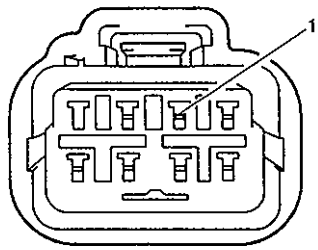

1. "Blue" wire terminal

DTC 52 – POWER SOURCE RELAY IN TCM
(RELAY OUTPUT VOLTAGE TOO HIGH EVEN THOUGH TCM ORDERS THE RELAY TO TURN OFF OR RELAY OUTPUT VOLTAGE TOO LOW EVEN THOUGH TCM ORDERS THE RELAY TO TURN ON)

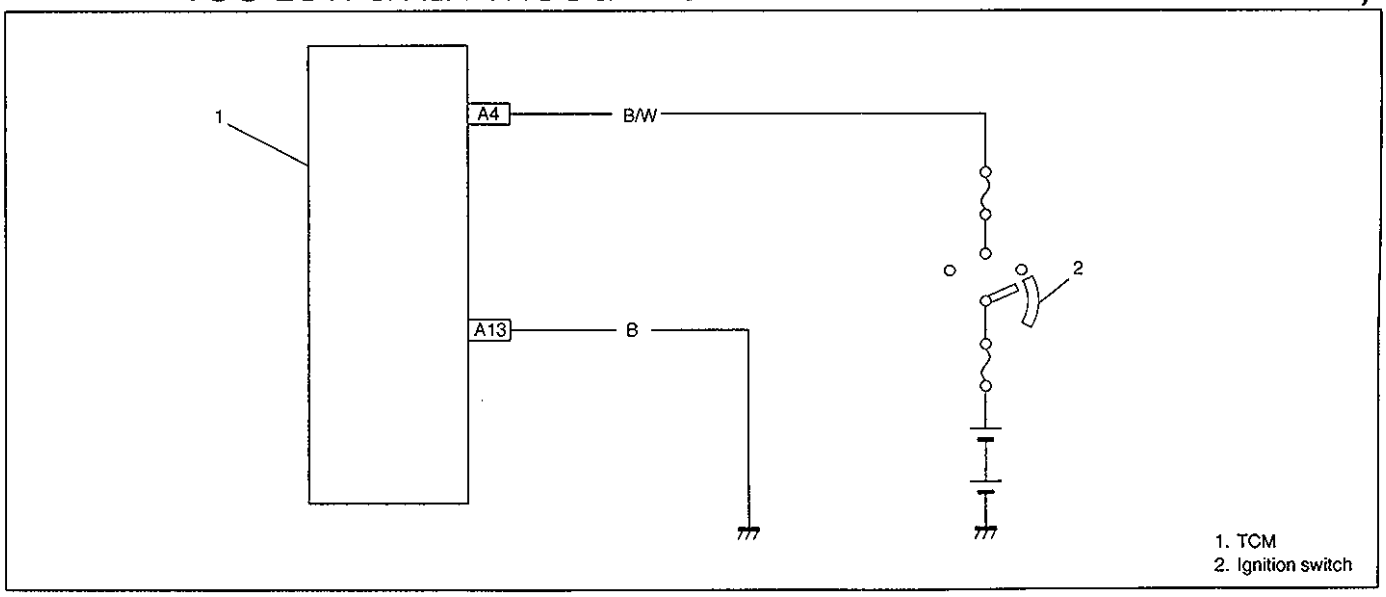

STEP	ACTION	YES	NO
1	1) Turn ignition switch ON. 2) Erase all DTCs referring to HOW TO CLEAR DTC in this section. 3) Turn ignition switch OFF. 4) Turn ignition switch ON once again and check for any DTC. Is it DTC 52? (Figure 1)	Replace TCM.	Could be a temporary malfunction of the TCM.

Figure 1

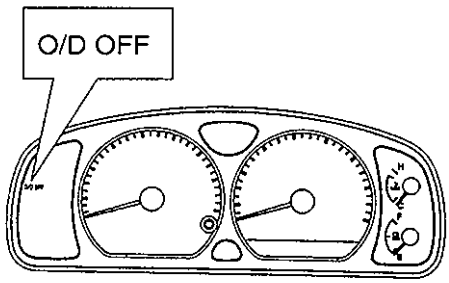

INSPECTION OF TCM AND ITS CIRCUITS

TCM and its circuits can be checked at TCM wiring couplers by measuring voltage and resistance.

CAUTION:
TCM cannot be checked by itself, it is strictly prohibited to connect voltmeter or ohmmeter to TCM with coupler disconnected from it.

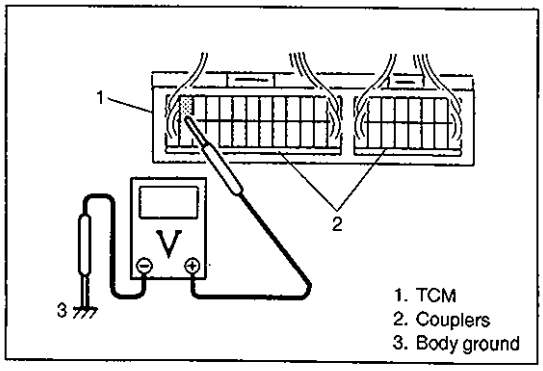

Voltage Check

1) Remove TCM from vehicle referring to p.7B-58.
2) Connect TCM couplers to TCM.
3) Check voltage at each terminal of couplers connected.

NOTE:
As each terminal voltage is affected by the battery voltage, confirm that it is 11 V or more when ignition switch is ON.

Terminal arrangement of TCM coupler (Viewed from harness side)

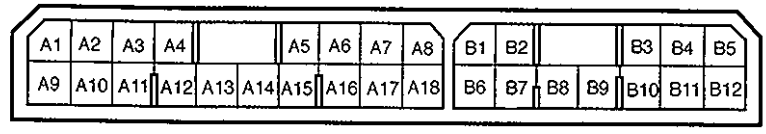

TERMI-NAL	CIRCUIT	STANDARD VOLTAGE	CONDITION
A1	Shift solenoid No.1	about 0 V	IG switch ON, select lever at "P" range
A2	Shift solenoid No.3	about 0 V	IG switch ON, select lever at "P" range
A3	D-range idle up signal	10 – 14 V	Select lever at "P" or "N" range
		about 0 V	Select lever other than "P" and "N" range
A4	IG power source	10 – 14 V	IG switch ON
A5	A/T fluid temperature sensor	–	–
A6	A/C compressor	about 0 V	A/C OFF
		10 – 14 V	A/C ON
A7	Throttle opening signal	–	IG switch ON. The voltage should decrease as the throttle pedal depressed
A8	Turbine rev. sensor (+)	–	–
A9	Shift solenoid No.2	10 – 14 V	IG switch ON, select lever at "P" range
A10	Shift solenoid No.4	about 0 V	IG switch ON, select lever at "P" range
A11	O/D signal	10 – 14 V	IG switch ON, O/D cut switch OFF ("O/D OFF" not-illuminated)
		about 0 V	IG switch ON, O/D cut switch ON ("O/D OFF" illuminated)
A12	Lock-up solenoid	about 0 V	IG switch ON, select lever at "P" range
A13	Ground	–	–
A14	Sensor ground	–	–
A15	Vehicle speed sensor	–	–
A16	Brake switch	10 – 14 V	IG switch ON, brake pedal depressed
A17	Engine coolant temp. signal	–	–
A18	Turbine rev. sensor (–)	–	–
B1	A/T vehicle speed sensor (+)	–	–
B2	Engine rev. speed signal	–	–
B3	Transmission range "N" switch	10 – 14 V	IG switch ON, select lever at "N" range
		about 0 V	IG switch ON, select lever other than "N" range
B4	Transmission range "R" switch	10 – 14 V	IG switch ON, select lever at "R" range
		about 0 V	IG switch ON, select lever other than "R" range
B5	Transmission range "P" switch	10 – 14 V	IG switch ON, select lever at "P" range
		about 0 V	IG switch ON, select lever other than "P" range
B6	A/T vehicle speed sensor (–)	–	–
B7	Vehicle speed sensor shield	–	–
B8	Serial communication	4.5 – 5.5 V	When SUZUKI scan tool not used
B9	Diagnosis switch	–	–
B10	Transmission range "L" switch	10 – 14 V	IG switch ON, select lever at "L" range
		about 0 V	IG switch ON, select lever other than "L" range
B11	Transmission range "2" switch	10 – 14 V	IG switch ON, select lever at "2" range
		about 0 V	IG switch ON, select lever other than "2" range
B12	Transmission range "D" switch	10 – 14 V	IG switch ON, select lever at "D" range
		about 0 V	IG switch ON, select lever other than "D" range

ON-VEHICLE SERVICE

MAINTENANCE SERVICE

FLUID LEVEL

LEVEL CHECK AT NORMAL OPERATING TEMPERATURE

1) Stop vehicle and place it level.
2) Apply parking brake and place chocks against wheels.
3) With selector at P position, start engine.
4) Warm up engine till fluid temperature reaches normal operating temperature (70 – 80°C/158 – 176°F). As a guide to check fluid temperature, warm up engine to normal operating temperature.

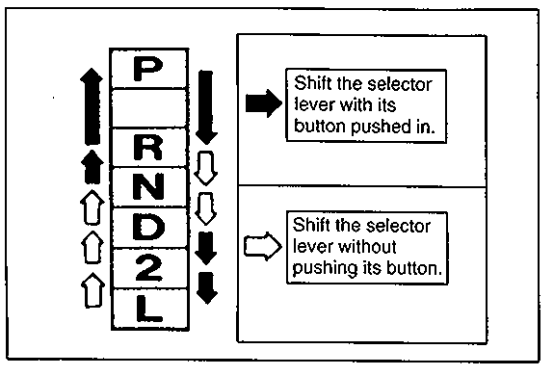

5) Keep engine idling and shift selector slowly to L and back to P position.
6) With engine idling, pull out dipstick, wipe it off with a clean cloth and put it back into place.

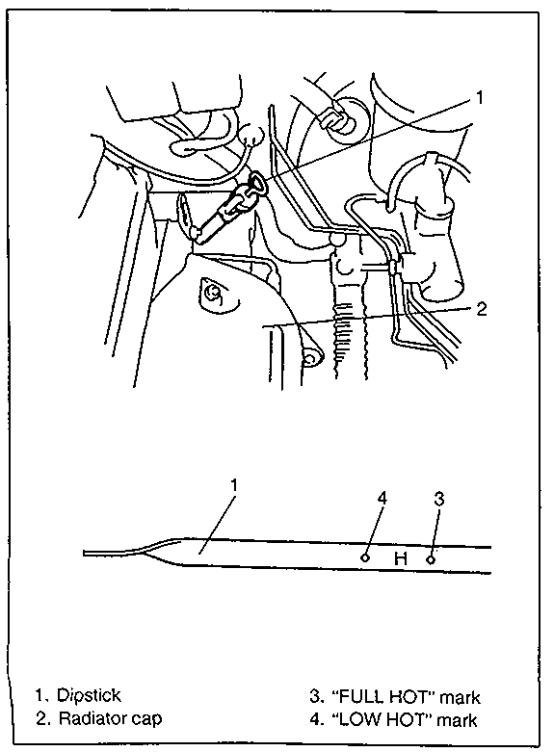

1. Dipstick
2. Radiator cap
3. "FULL HOT" mark
4. "LOW HOT" mark

7) Pull out dipstick again and check fluid level indicated on it. Fluid level should be between FULL HOT and LOW HOT. If it is below LOW HOT, add an equivalent of DEXRON®-IIE or DEXRON®-III, up to FULL HOT.

Fluid specification
An equivalent of DEXRON®-IIE or DEXRON®-III

NOTE:

- **DO NOT RACE ENGINE while checking fluid level, even after the engine start.**
- **DO NOT OVERFILL. Overfilling can cause foaming and loss of fluid through breather. Then slippage and transmission failure can result.**
- **Bringing the level from LOW HOT to FULL HOT requires 0.13 liters (0.27/0.23 US/Imp. pt).**
- **If vehicle was driven under high load such as pulling a trailer, fluid level should be checked about half an hour after it is stopped.**

FLUID CHANGE INTERVALS

If the vehicle is usually driven under one or more of the following severe conditions, change the transmission fluid every 160,000 km (100,000 miles).

- In heavy city traffic. Where the outside temperature regularly reaches 32°C (90°F).
- In very hilly or mountainous areas.
- Commercial use, such as taxi, police vehicle or delivery service.

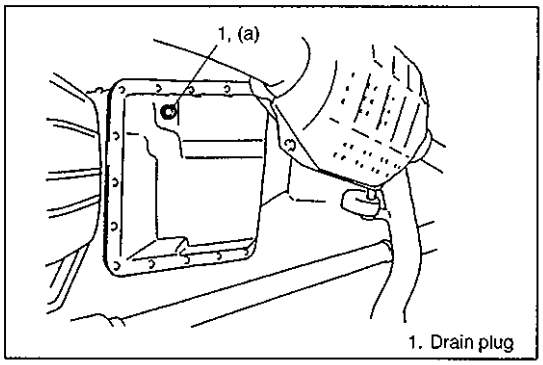

1. Drain plug

CHANGING FLUID

1) Lift up vehicle.
2) When engine has cooled down, remove drain plug from oil pan and drain A/T fluid.
3) Install drain plug.

Tightening Torque
(a): 22 N·m (2.2 kg-m, 16.0 lb-ft)

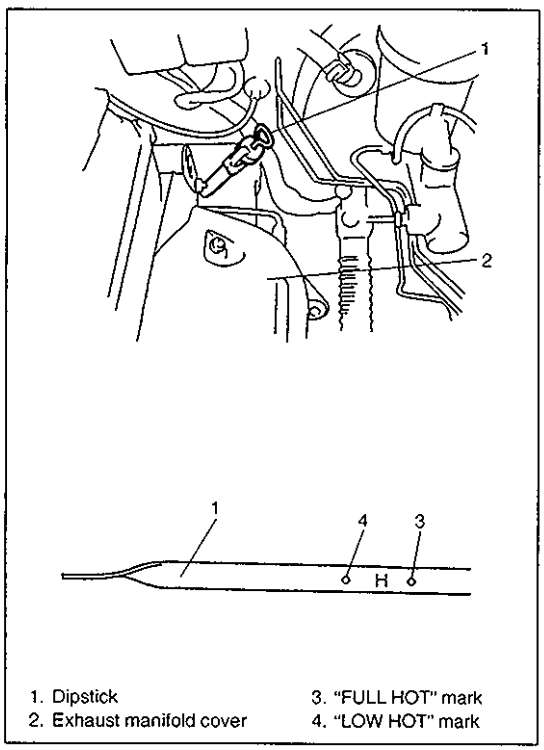

1. Dipstick
2. Exhaust manifold cover
3. "FULL HOT" mark
4. "LOW HOT" mark

4) Lower vehicle and fill proper amount of an equivalent of DEXRON®-IIE or DEXRON®-III.
5) Check fluid level according to procedure described under LEVEL CHECK AT NORMAL OPERATING TEMPERATURE.

Fluid specification
An equivalent of DEXRON®-IIE or DEXRON®-III

Fluid capacity	
When draining from drain plug hole	1.4 liters (2.96/2.46 US/Imp.pt.)
When overhauling	3.7 liters (7.82/6.51 US/Imp.pt.)

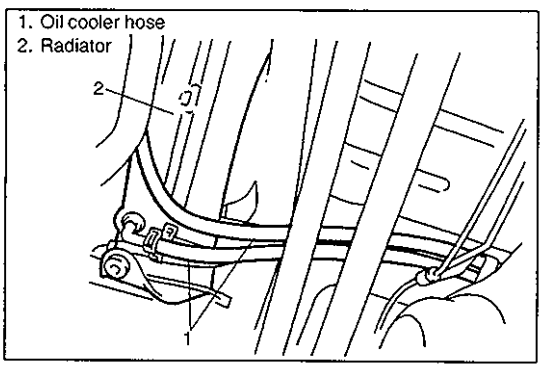

OIL COOLER HOSES

The rubber hoses for the oil cooler should be replaced every 60,000 km (36,000 miles) or every 3 years. When replacing them, be sure to note the following.

- Replace clamps at the same time
- Insert hose as far as its limit mark
- Clamp clamps securely

SELECTOR LEVER

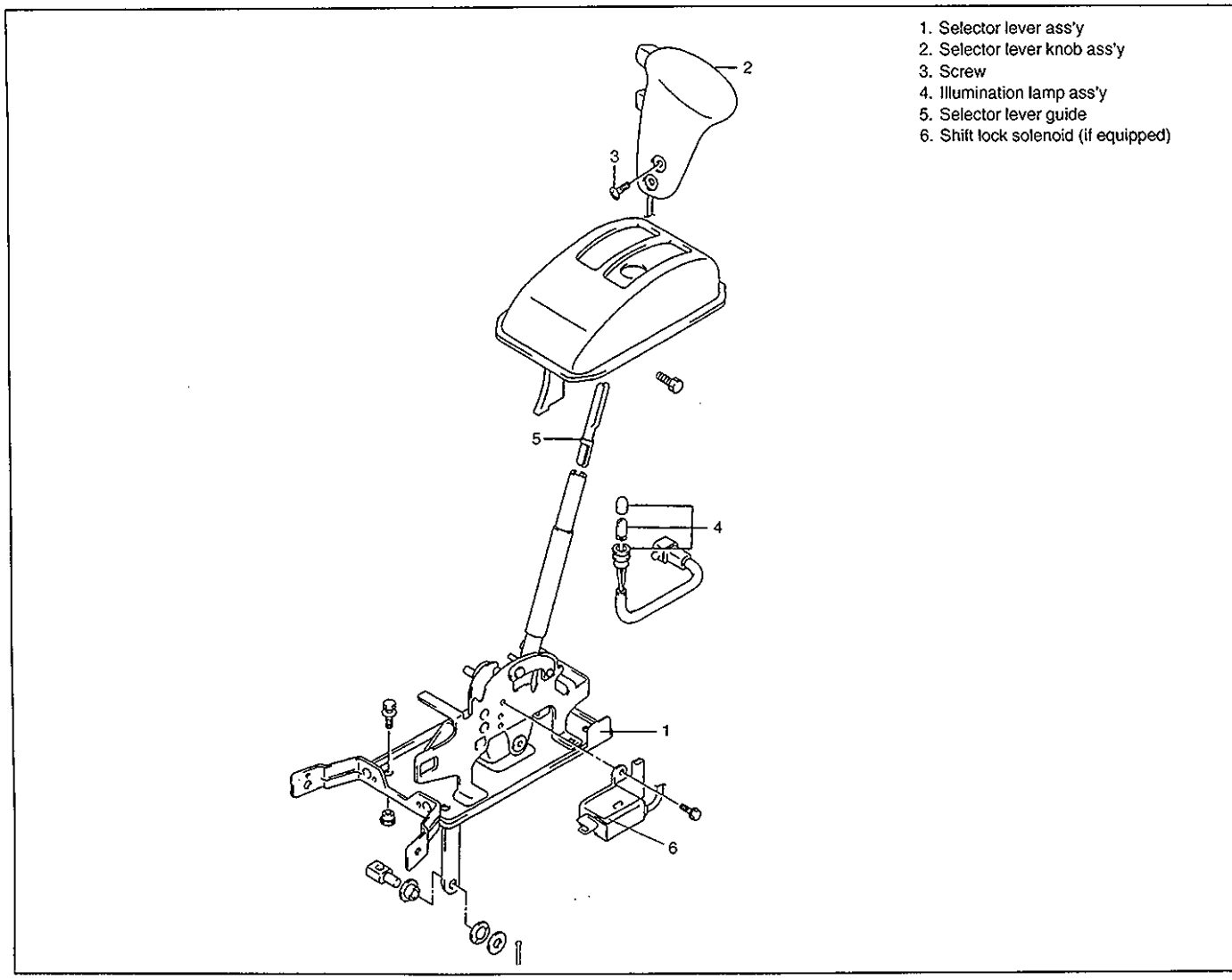

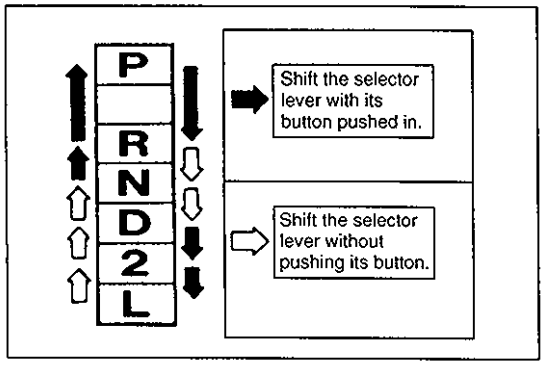

INSPECTION

Check selector lever for smooth and clear cut movement and position indicator for correct indication.

For operation of selector lever, refer to the figure.

SHIFT SWITCH

REMOVAL

1) Block wheels and turn selector lever to "N" range.
2) Disconnect shift switch coupler and remove selector rod from shift control shaft lever.
3) Remove shift control shaft lever and then shift switch.

CAUTION:
Do not overhaul shift switch.

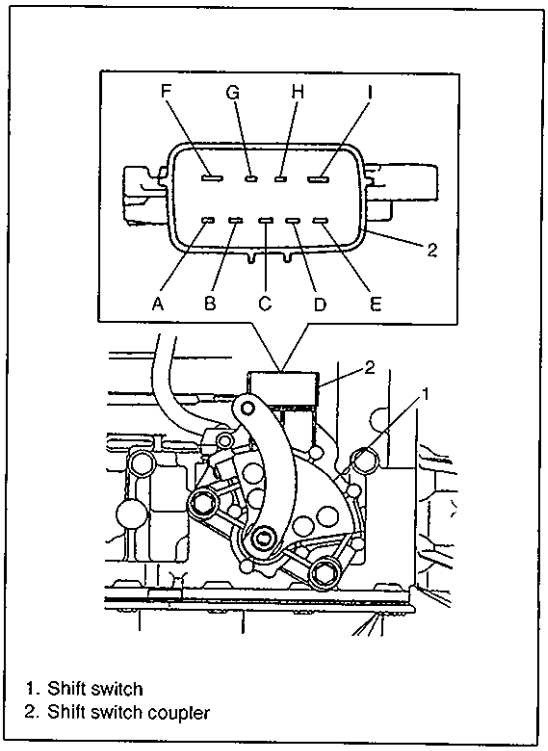

1. Shift switch
2. Shift switch coupler

INSPECTION

1) Disconnect shift switch coupler.
2) Check that continuity exists at terminals shown below by moving selector lever.

Switch Position \ Terminal No	B	A	H	C	E	D	G	I	F
P			○			○		○	○
R			○		○				
N			○				○	○	○
D			○	○					
2		○	○						
L	○		○						

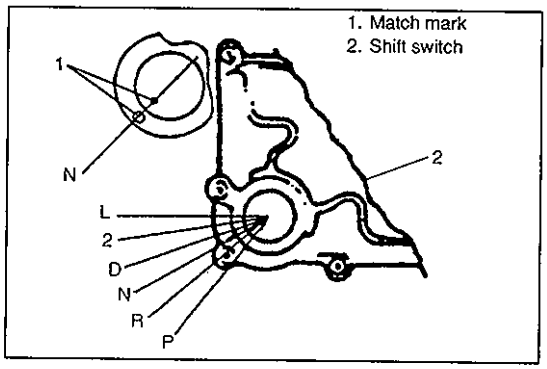

1. Match mark
2. Shift switch

INSTALLATION

1) Using flat tip screwdriver, turn shift switch to align match marks (shift switch "N" range). Turn shift control shaft to "N" range (to have the automatic transmission to "N" range).

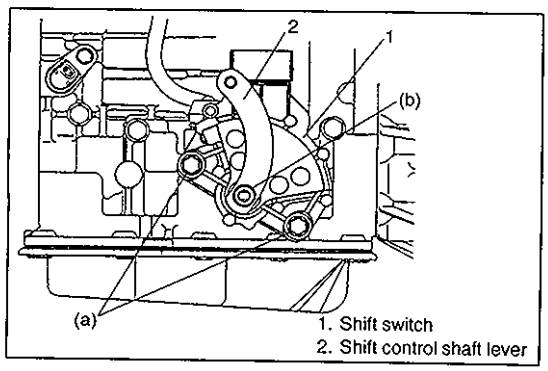

1. Shift switch
2. Shift control shaft lever

2) Install shift switch to transmission case and then lever to shift control shaft after setting them in "N" position as shown in figure. Tighten bolts and nut to specification.

Tightening Torque
(a): 18 N·m (1.8 kg-m, 13.0 lb-ft)
(b): 13 N·m (1.3 kg-m, 9.5 lb-ft)

3) Shift selector lever to "N" position and connect selector rod to shift control shaft lever.
4) Move selector lever in cabin to each range and check the continuity of each terminal of shift switch referring to INSPECTION.

5) Connect shift switch coupler.
6) Check that the engine can only be started in "N" and "P" range, but can not in "D", "2", "L" or "R" range. Also, check that backup lights come ON at "R" range.

SELECTOR ROD

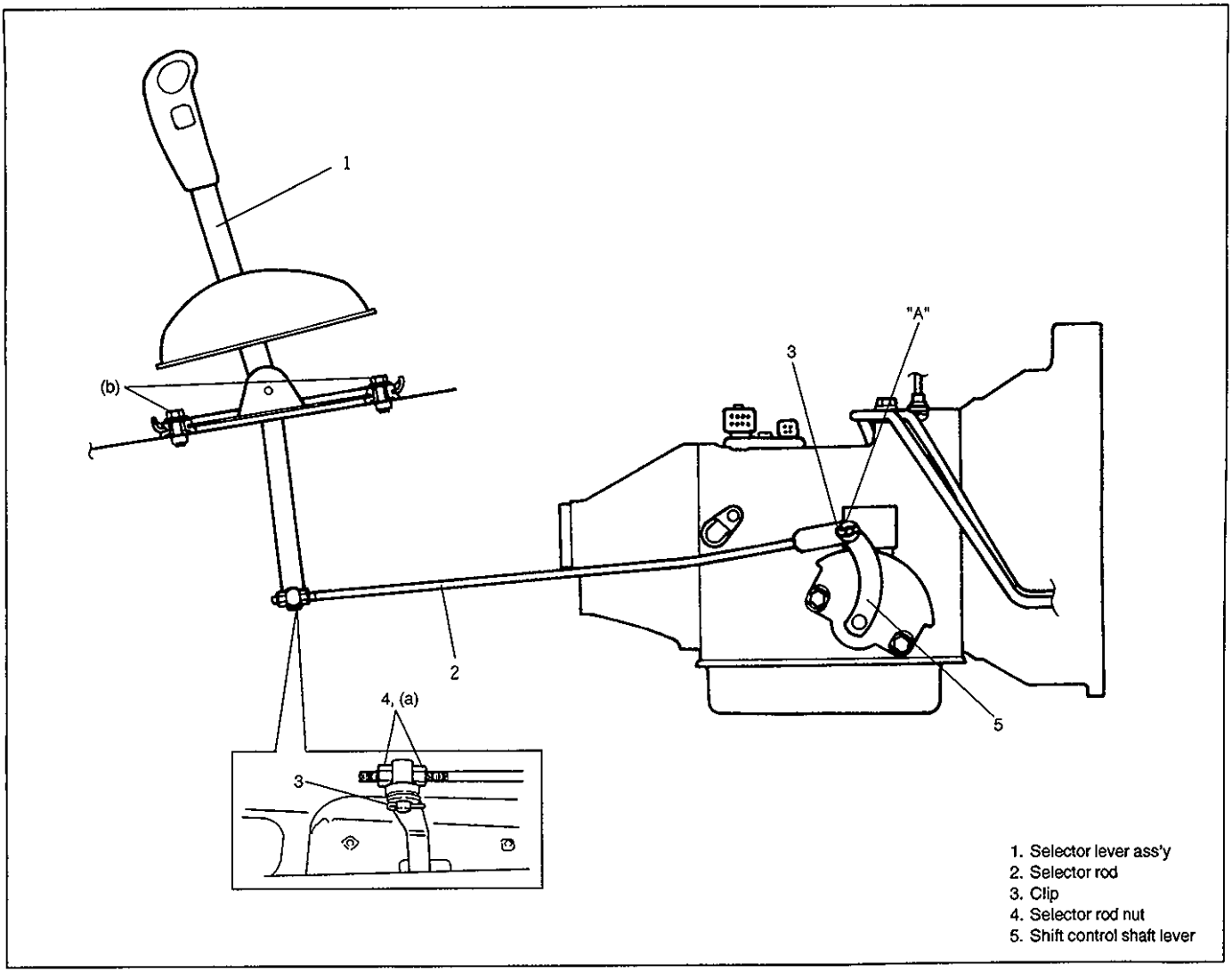

1. Selector lever ass'y
2. Selector rod
3. Clip
4. Selector rod nut
5. Shift control shaft lever

REMOVAL

1) Hoist vehicle.
2) Remove clips on both ends of selector rod.
3) Remove selector rod from transmission and selector lever assembly.

INSTALLATION

Install selector rod by reversing removal procedure.
The important steps in installation are as follows.

- Apply grease to shift switch lever pin.

  "A": SUZUKI SUPER GREASE A (99000-32020)

- Tighten bolts and nut in upper figure to specified torque.

  Tightening Torque
  (a): 7 N·m (0.7 kg-m, 5.0 lb-ft)
  (b): 18 N·m (1.8 kg-m, 13.0 lb-ft)

- Adjusting procedure is as follows.

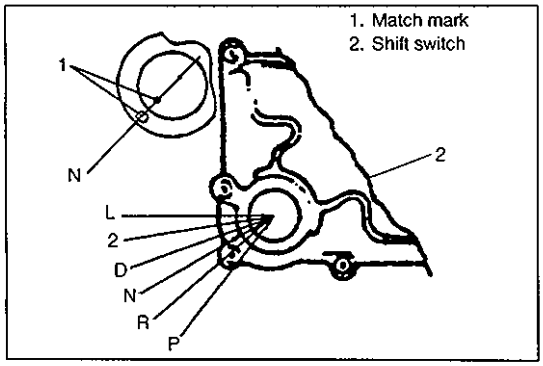

ADJUSTMENT

1) Before tightening rod end nut, shift selector lever to N range.
2) Also shift control shaft lever to N range by aligning match marks.

NOTE:
Make sure that nuts and rod joint have clearance under above conditions.

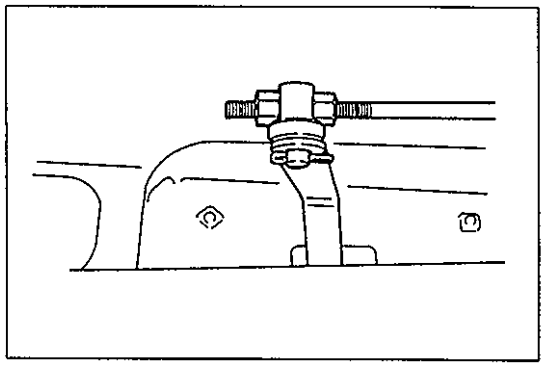

3) Turn nuts by hand till it contacts control shift lever joint. Then tighten them with wrench.
4) After selector rod was installed, check for the following.
   - Push vehicle with selector lever shifted to P range. Vehicle should not move.
   - Vehicle can not be driven in N range.
   - Vehicle can be driven in D, 2 and L ranges.
   - Vehicle can be backed in R range.

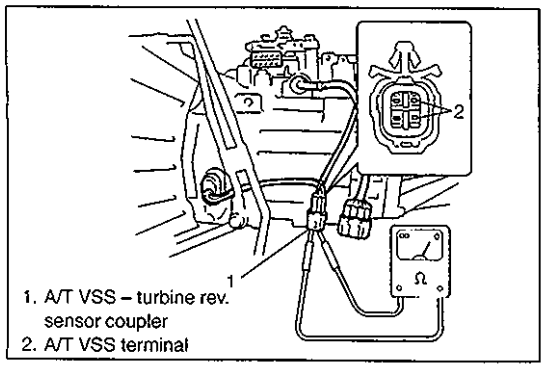

1. A/T VSS – turbine rev. sensor coupler
2. A/T VSS terminal

A/T VEHICLE SPEED SENSOR (A/T VSS)

INSPECTION

1) Disconnect negative cable at battery.
2) Disconnect A/T VSS – turbine rev. sensor coupler.
3) Check resistance between A/T VSS terminals.

A/T VSS standard resistance: 160 – 200 Ω at 20°C (68°F)

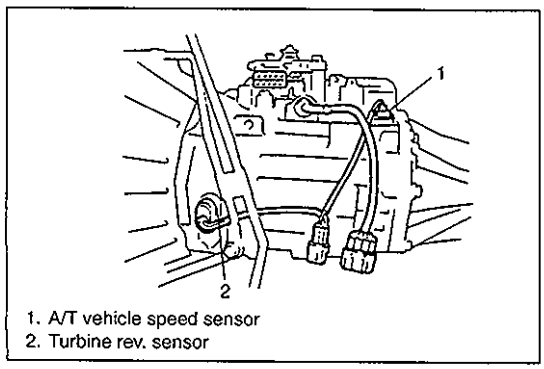

1. A/T vehicle speed sensor
2. Turbine rev. sensor

REMOVAL

1) Disconnect negative cable at battery.
2) Disconnect A/T VSS – turbine rev. sensor coupler.
3) Remove A/T VSS – turbine rev. sensor by removing its bolt.

INSTALLATION

1) Apply A/T fluid to A/T VSS O-ring.
2) Install A/T VSS to A/T case and tighten bolt to specified torque.

Tightening Torque for A/T VSS:
8 N·m (0.8 kg-m, 6.0 lb-ft)

3) Connect A/T VSS – turbine rev. sensor coupler.
4) Connect negative cable to battery.

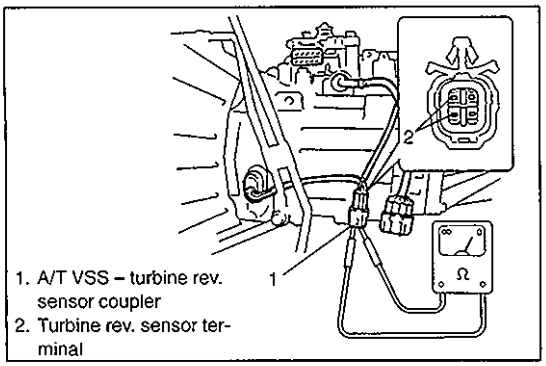

1. A/T VSS – turbine rev. sensor coupler
2. Turbine rev. sensor terminal

TURBINE REVOLUTION SENSOR

INSPECTION

1) Disconnect negative cable at battery.
2) Disconnect A/T VSS – turbine rev. sensor coupler.
3) Check resistance between turbine revolution sensor terminals.

Turbine revolution sensor standard resistance: 160 – 200 Ω at 20°C (68°F)

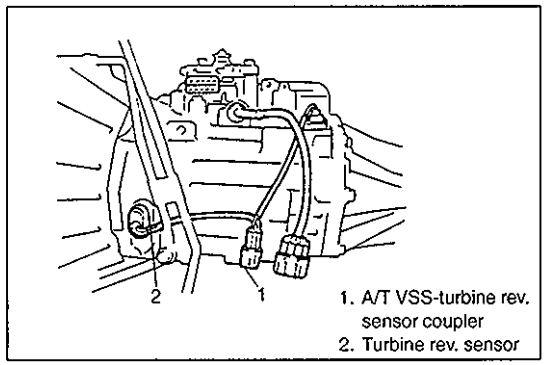

1. A/T VSS-turbine rev. sensor coupler
2. Turbine rev. sensor

REMOVAL

1) Disconnect negative cable at battery.
2) Disconnect A/T VSS – turbine rev. sensor coupler.
3) Remove turbine rev. sensor by removing its bolt.

INSTALLATION

1) Apply A/T fluid to turbine revolution sensor O-ring.
2) Install turbine revolution sensor to A/T case and tighten bolt to specified torque.

Tightening Torque for Turbine Rev. Sensor
8 N·m (0.8 kg-m, 6.0 lb-ft)

3) Connect A/T VSS – turbine rev. sensor coupler.
4) Connect negative cable to battery.

VEHICLE SPEED SENSOR

Refer to Section 6E for removal, installation and inspection.

THROTTLE POSITION SENSOR

INSPECTION

Check throttle position sensor referring to Section 6E.

ENGINE COOLANT TEMP. (ECT) SENSOR

INSPECTION

Check engine coolant temp. sensor referring to Section 6E.

O/D cut switch ON

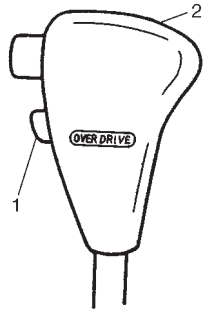

1. O/D cut switch
2. Shift lever

O/D cut switch OFF

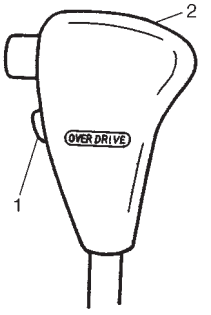

O/D CUT SWITCH

INSPECTION

1) Remove console box.
2) Disconnect O/D cut switch coupler.
3) Check continuity between O/D cut switch terminals.

O/D cut switch	ON	OFF
Continuity	Continuity	No continuity

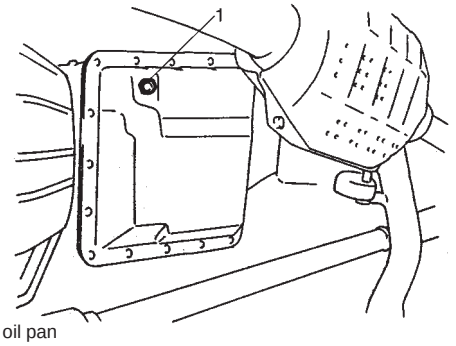

1. A/T oil pan

SHIFT SOLENOID VALVES AND A/T FLUID TEMP. SENSOR

REMOVAL

1) Disconnect negative cable from battery.
2) Drain A/T fluid.
3) Remove A/T oil pan.
4) Disconnect A/T fluid temp. sensor coupler.

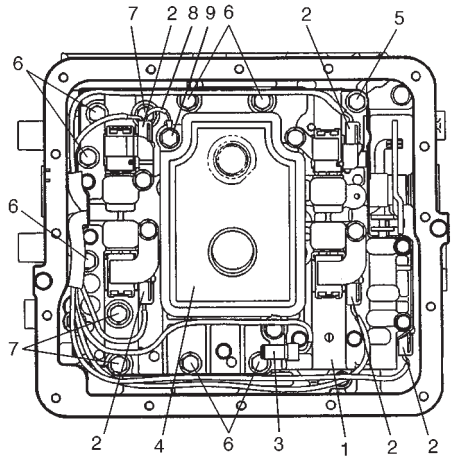

1. Valve body ass'y
2. Coupler
3. A/T fluid temp. sensor
4. Oil strainer ass'y
5. Bolt A
6. Bolt B
7. Bolt C
8. Ground wire
9. Oil strainer bolt

5) Remove one of oil strainer bolts and ground wire for shift solenoid valve No.1.
6) Disconnect shift solenoid and A/T fluid temp. sensor couplers.
7) Remove shift solenoid valves (No.1, No.3 and No.4) and lock-up solenoid valve.
8) Remove valve body ass'y.
9) Remove shift solenoid valve No.2.

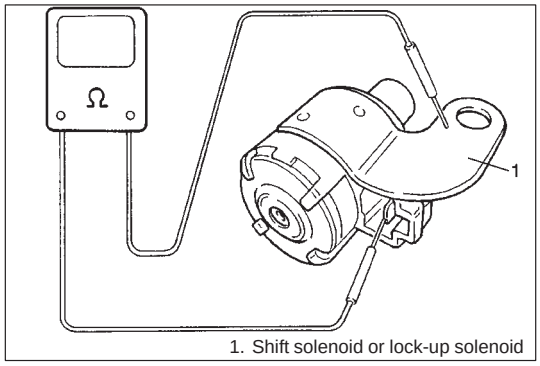

1. Shift solenoid or lock-up solenoid

SHIFT SOLENOID VALVES AND LOCK-UP SOLENOID VALVE

INSPECTION

Resistance Check

- Shift solenoid No.1, No.2, No.3, No.4 and lock-up solenoid. Check resistance between terminal and solenoid body.

  Standard resistance: 11.5 – 12.5 Ω

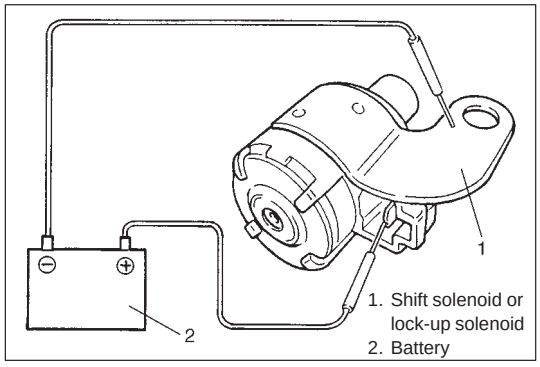

1. Shift solenoid or lock-up solenoid
2. Battery

Operation check

Shift solenoid valves No.1, No.2, No.3, No.4 and lock-up solenoid When solenoids is connected to the battery as shown in figure, check that the solenoid actuates with a click sound.

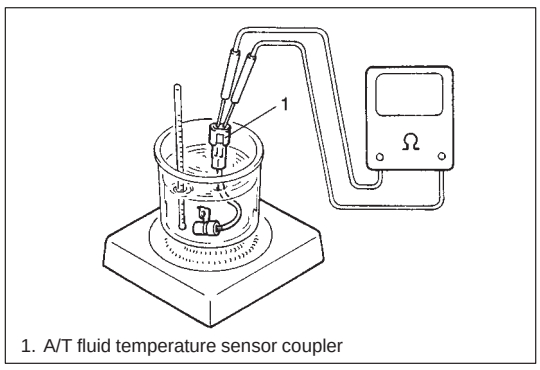

1. A/T fluid temperature sensor coupler

A/T FLUID TEMP. SENSOR

INSPECTION

Warm up A/T fluid temp. sensor. Thus make sure its resistance decrease with the increase of temperature.

Temperature	Resistance
20°C (68°F)	2.5 kΩ
40°C (104°F)	1.2 kΩ
60°C (140°F)	0.6 kΩ

INSTALLATION

Reverse removal procedure for installation noting following points.

- Tighten solenoid valve bolts and valve body ass'y bolts to specification referring to 7B-101.

  Tightening Torque for solenoid valve bolts:
  8 N·m (0.8 kg-m, 6.0 lb-ft)

  Tightening Torque for Valve Body Ass'y Bolts A, B and C:
  10 N·m (1.0 kg-m, 7.5 lb-ft)

- Make sure that slot of manual valve is fitted to pin of manual valve lever.

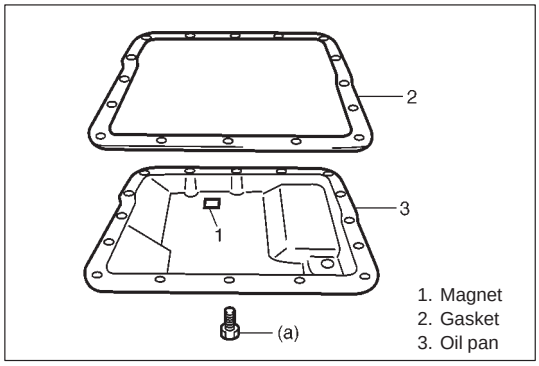

- Clean mating surface of A/T oil pan and A/T case and install new gasket to A/T oil pan.
  Tighten bolts to specification.

  Tightening Torque
  (a): 7.5 N·m (0.75 kg-m, 5.5 lb-ft)

- Refill A/T fluid referring to 7B-48 and verify that there is no A/T fluid leakage.

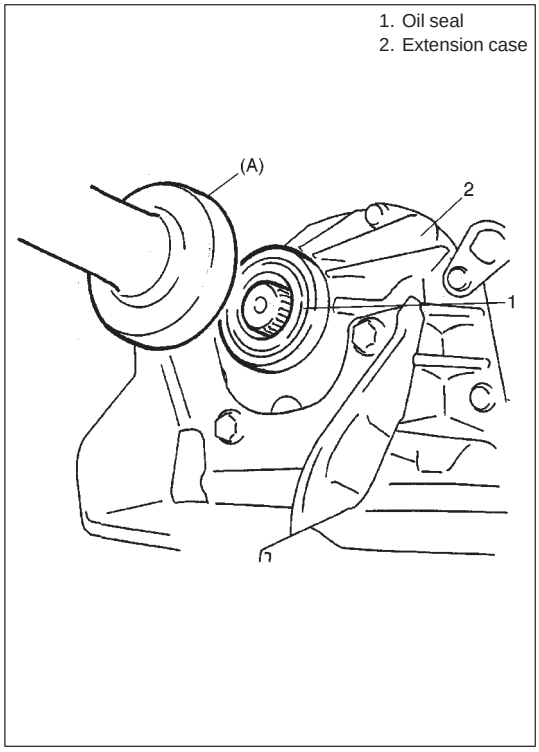

EXTENSION CASE OIL SEAL

REPLACEMENT

1) Lift up vehicle and drain transmission oil.
2) Remove propeller shaft No.1 and No.2.
   Refer to Section 4B for procedure.
3) Remove extension case oil seal by using screwdriver or like.
4) Install new differential side oil seal by using special tool.

   NOTE:
   For oil seal installation, press-fit oil seal so that transmission case end face is flush with oil seal end face.

   Special Tool
   (A): 09913-75520

5) Install propeller shafts referring to Section 4B.
6) Refill A/T fluid referring to p. 7B-69.

TRANSMISSION CONTROL MODULE (TCM)

CAUTION:
TCM and ECM consist of highly precise parts, so when handling it (or them), be careful not to expose to excessive shock.

REMOVAL
Remove ECM and separate TCM from ECM bracket.
Refer to SECTION 6E for ECM removal.

INSTALLATION
Reverse removal procedure noting the following.
- Connect ECM and TCM couplers securely.
- If the vehicle is equipped with air bag system, be sure to enable air bag system after TCM and ECM are back in place. Refer to "Enabling Air Bag System" in Section 10B.

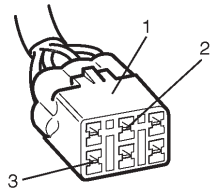

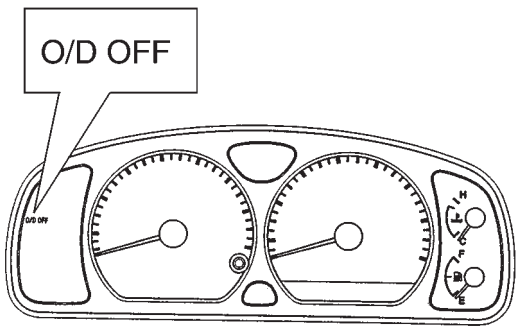

1. Monitor coupler
2. Diag. switch terminal
3. Ground terminal

LEARNING CONTROL MEMORY INITIALIZATION

Initialization of learning control memory in TCM should be made upon replacement of parts as explained below.
- Automatic transmission assembly replacement with new or used one
- Any A/T brake component parts replacement such as discs, plates and flange with new or used one(s)
- Any A/T clutch component parts replacement such as discs, plates and flange with new or used one(s)
- Replacement of TCM with used one

1) Turn ignition switch to "ON" position. (Do not start engine.)
2) Bring diag. switch terminal of monitor coupler in contact with ground terminal using service wire.
3) Repeat shifting selector lever from "D" to "2" position and vice versa for 3 times within 10 seconds to complete memory initialization.
4) Confirm initialization by DTC set in system referring to "DTC CHECK" in this section.
   DTC No.12: completion of initialization is confirmed
   DTC No.52: initialization is failed
5) If you failed initialization, repeat steps 1) to 3).

NOTE:
- **"O/D OFF" lamp continues to turn on while initialization.**
- **DTCs which might have been set in system other than No.12 and 52 are also erased by initialization.**

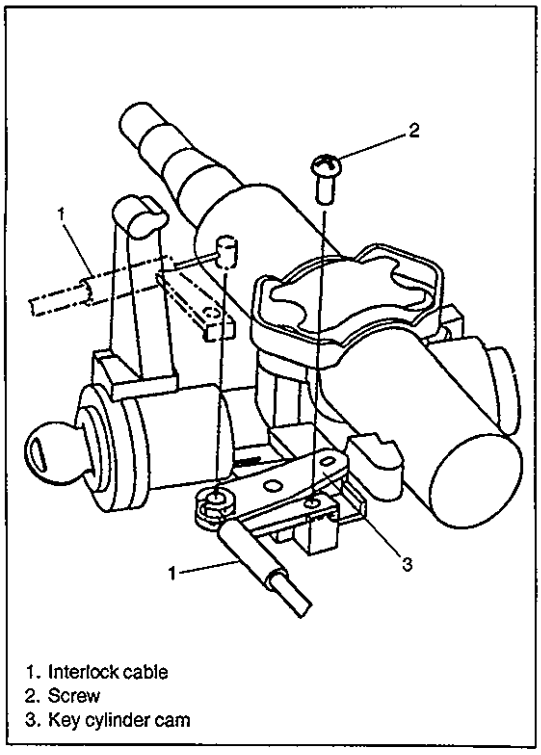

1. Interlock cable
2. Screw
3. Key cylinder cam

INTERLOCK CABLE (if equipped)

NOTE:

Don't bend interlock cable excessively when removing and installing it, or system will not operate correctly.

REMOVAL

1) Disconnect negative cable at battery and disable air bag system, referring to "DISABLING AIR BAG SYSTEM" in Section 10B.
2) Remove steering upper and lower cover.
3) Remove interlock cable clamp screw located at ignition switch and disconnect interlock cable from key cylinder cam with ignition switch turned at "ACC" position. And then turn ignition switch to "LOCK" position.

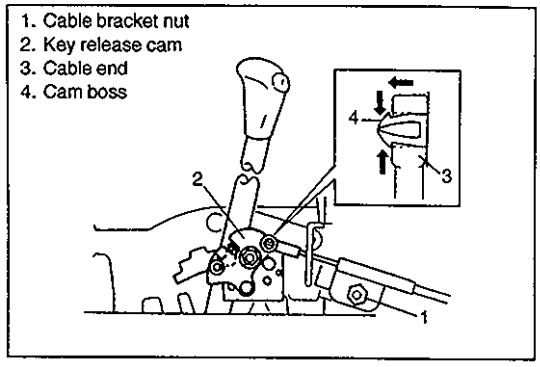

1. Cable bracket nut
2. Key release cam
3. Cable end
4. Cam boss

4) Remove parking brake cover and console box.
5) Remove cable bracket nut and detach cable end from key release cam while pressing claws of release cam boss.
   At this time, be careful not to cause damage to its claws.
6) Remove interlock cable.

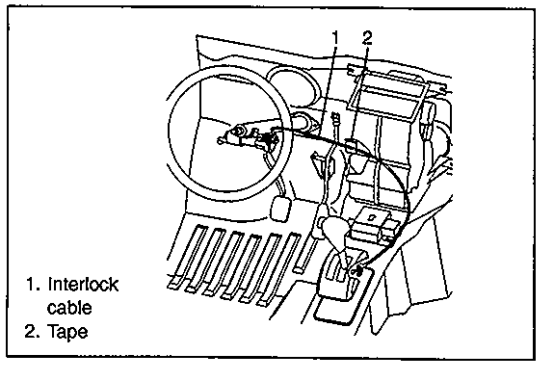

1. Interlock cable
2. Tape

INSTALLATION

1) Install interlock cable as shown in figure.

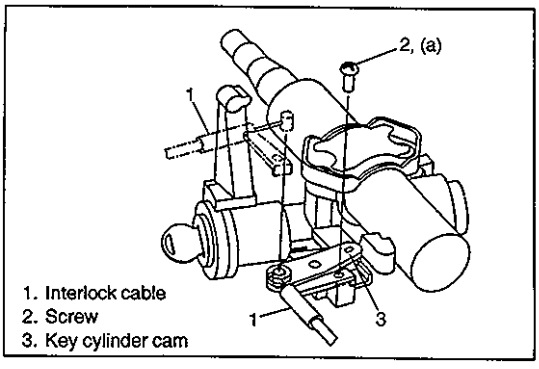

1. Interlock cable
2. Screw
3. Key cylinder cam

2) Connect cable end to steering lock and tighten cable clamp screw securely.

Tightening Torque
(a): 2.2 N·m (0.22 kg-m, 1.6 lb-ft)

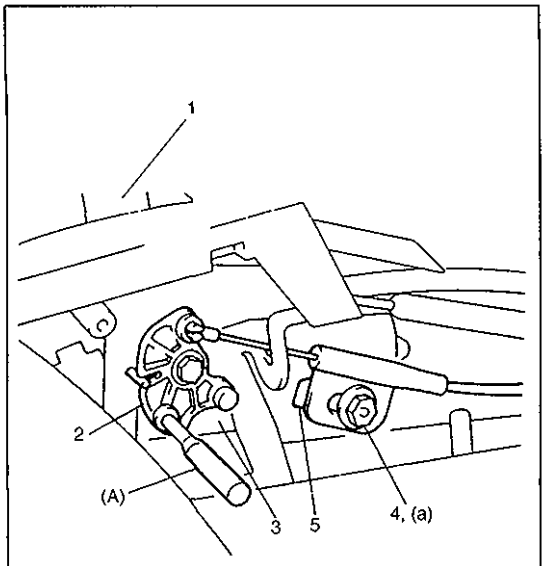

1. Selector lever ("P" position and pushing knob button)
2. Key release cam
3. Selector bracket
4. Cable bracket nut
5. Leaf spring

3) Shift selector lever to "P" position and with lock plate manually moved toward front side of vehicle, push knob button of selector lever.
4) Under above condition, fix key release cam inserting special tool into holes on cam and selector bracket.

Special Tool
(A): 09925-78210 (6 mm)

5) Connect cable end to key release cam.
6) With cable bracket pushed in arrow direction by spring force, tighten cable bracket nut.

Tightening Torque
(a): 13 N·m (1.3 kg-m, 9.5 lb-ft)

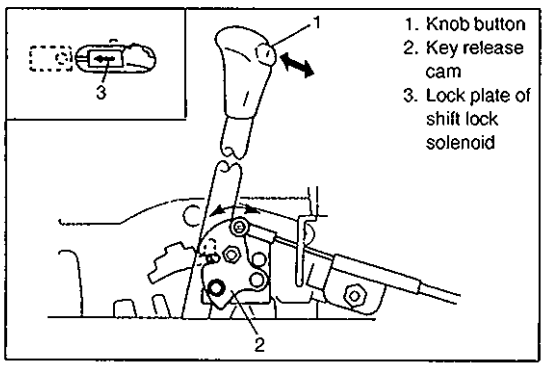

1. Knob button
2. Key release cam
3. Lock plate of shift lock solenoid

7) Remove special tool. Then with lock plate of shift lock solenoid manually moved toward front side of vehicle, check that key release cam moves smoothly by operating knob button of selector lever.

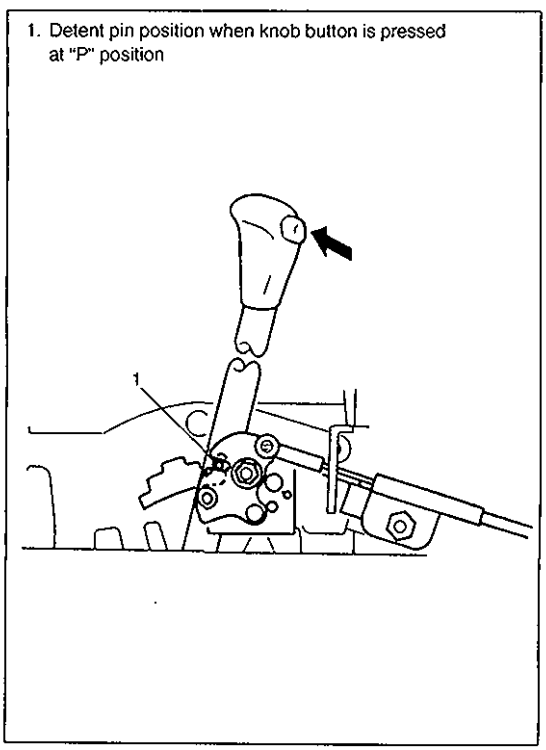

1. Detent pin position when knob button is pressed at "P" position

8) With selector lever set at "P" position, turn ignition key to "ACC" position and then check for following conditions.
   - With knob button released, ignition key can be turned from "ACC" position to "LOCK" position.
   - With knob button pressed, ignition key cannot be turned from "ACC" position to "LOCK" position.
9) Install steering upper and lower cover.
10) Connect negative cable at battery and enable air bag system, referring to "ENABLING AIR BAG SYSTEM" in Section 10B.

TRANSMISSION UNIT REPAIR OVERHAUL

NOTE:
When transmission is replaced, or when any A/T clutch or brake component parts such as discs, plates and flange are replaced with new or used one(s), learning control memory of TCM should be initialized after those replacement referring to "LEARNING CONTROL MEMORY INITIALIZATION" in this section.

DISMOUNTING

NOTE:
If automatic transmission is overhauled later on, draining A/T fluid at this point will facilitate work.

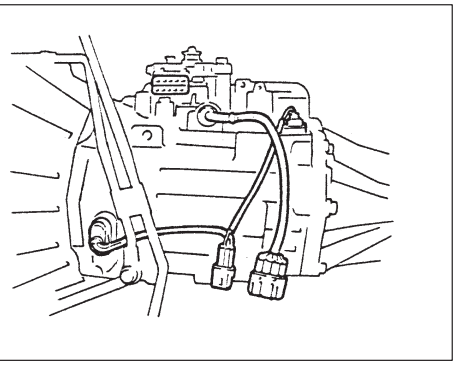

1) Remove following parts.
   - Propeller shafts No.1 and No.2 (refer to SECTION 4B)
   - Exhaust pipe (refer to SECTION 6K)
   - Negative cable from battery
2) Disconnect couplers. (2 couplers from wire harness and 1 from shift switch)

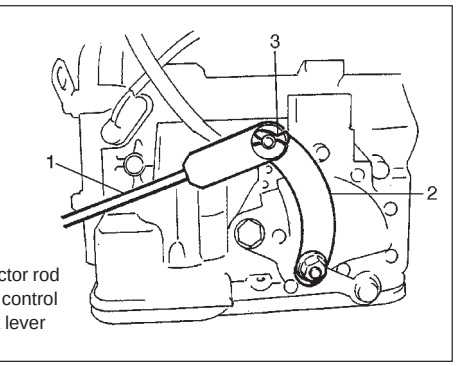

1. Selector rod
2. Shift control shaft lever
3. Pin

3) Remove selector rod from shift control shaft lever by removing pin.
4) Remove oil cooler hoses from pipes.

   NOTE:
   To avoid leakage of transmission fluid, plug open ends of oil cooler pipes and hoses right after they are disconnected.

5) Remove torque converter housing lower plate.

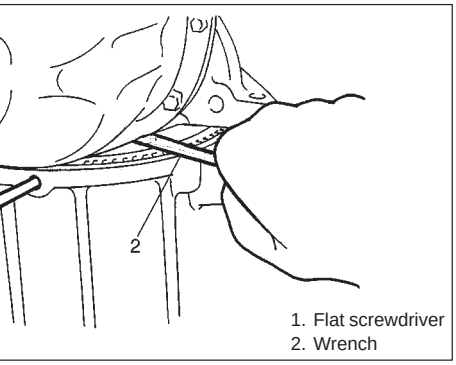

1. Flat screwdriver
2. Wrench

6) Remove drive plate bolts.
   To lock drive plate, engage a flat screwdriver with drive plate gear.
7) Remove starting motor.

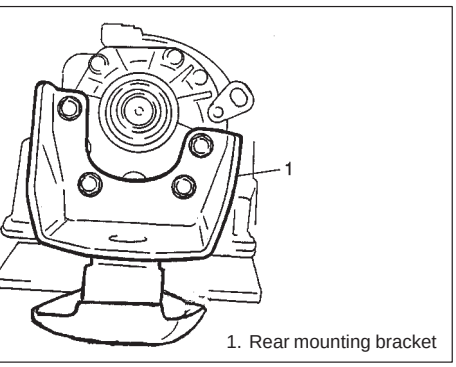

1. Rear mounting bracket

8) With transmission held up on jack, remove engine to transmission bolts and nuts.
9) Remove transmission rear mounting bracket.
10) Move transmission to the rear a little and lower it including torque converter.

WARNING:
Be sure to keep transmission horizontal throughout the work. Should it be tilted, torque converter may fall off and cause personal injury and A/T fluid may flow out.

REMOUNTING

WARNING:
When moving transmission assembly with torque converter equipped in it, be sure to keep it horizontal. Tilting it with its front facing down may allow converter to fall off. Whereby an injury may result.

For remounting, reverse dismounting procedure. Use specified torque as given below and left.

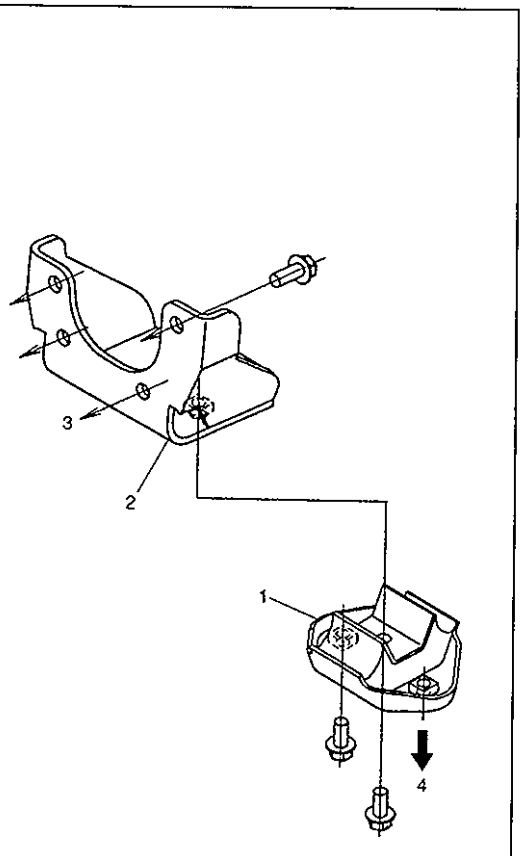

1. Transmission rear mounting
2. Transmission rear mounting bracket
3. To transmission
4. To frame

Tightening torque	N·m	kg-m	lb-ft
Exhaust pipe to manifold bolts	50	5.0	36.5
Muffler to exhaust pipe bolts	50	5.0	36.5
Universal joint flange bolts and nuts	50	5.0	36.5
Drive plate bolts	19	1.9	14.0
Engine to transmission bolts and nuts	50	5.0	36.5
Rear mounting bracket to transmission bolt	25	2.5	18.0
Rear mounting to bracket bolt	25	2.5	18.0
Frame to rear mounting bolts	25	2.5	18.0

- Clamp wiring harness and hoses securely.
- Refer to page 7B-53 for adjusting procedure of selector rod.
- Follow fluid level check procedure in page 7B-48 for refilling automatic transmission fluid, its level adjusting and fluid specification.
- Connect battery, and confirm that engine and transmission function acceptably.
- When remounting drive plate, use specified bolts.

DISASSEMBLY

CAUTION:
- **Thoroughly clean transmission exterior before overhauling it.**
- **Keep working table, tools and hands clean while overhauling.**
- **Use special care to handle aluminum parts so as not to damage them.**
- **Do not expose removed parts to dust. Keep them always clean.**

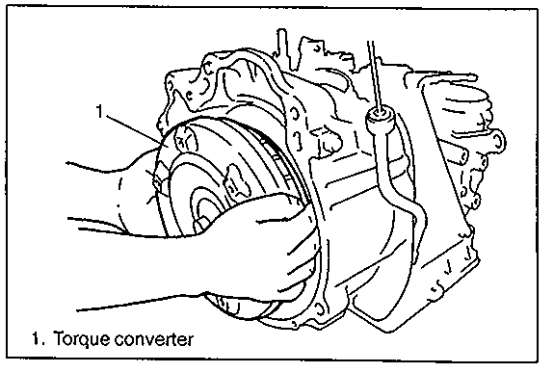

1. Torque converter

1) Remove torque converter.

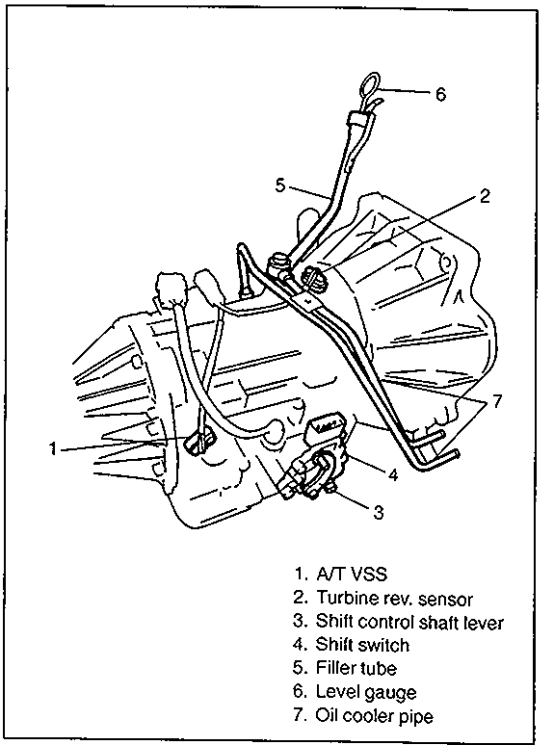

1. A/T VSS
2. Turbine rev. sensor
3. Shift control shaft lever
4. Shift switch
5. Filler tube
6. Level gauge
7. Oil cooler pipe

2) Remove following parts.
- Battery ground cable (if still attached)
- A/T VSS and turbine revolution sensor
- Shift control shaft lever and shift switch
- A/T fluid level gauge and filler tube
- Oil cooler pipes

3) Remove oil pan and oil pan gasket.

NOTE:
For removal of oil pan, do not turn transmission over as this will contaminate valve body with foreign matters in the bottom of oil pan.
When removing oil pan, tap around it lightly with a plastic hammer. Do not force it off by using a screwdriver or the like.

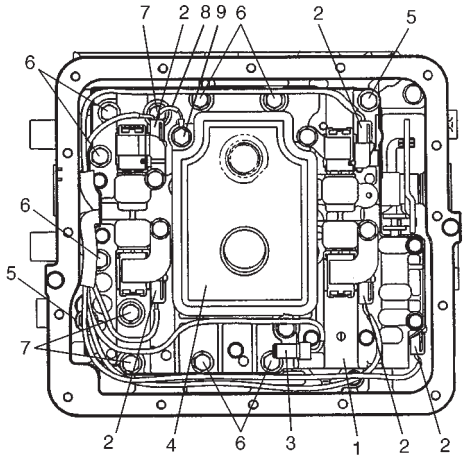

1. Valve body ass'y
2. Coupler
3. A/T fluid temp. sensor
4. Oil strainer ass'y
5. Bolt A
6. Bolt B
7. Bolt C
8. Ground wire
9. Oil strainer bolt

4) Remove one of oil strainer bolts and ground wire of shift solenoid valve No.1.
   Disconnect couplers from solenoid valves, and A/T fluid temperature sensor.
   Remove A/T fluid temperature sensor and oil strainer assembly.
5) Remove valve body assembly.

CAUTION:
Be careful not to let manual valve fall off when removing valve body assembly.

NOTE:
There are three kinds of bolts fixing valve body ass'y.

6) Remove solenoid harness assembly.

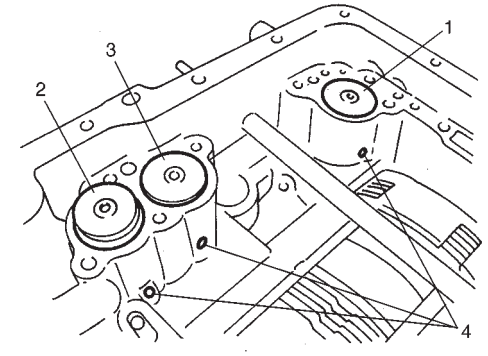

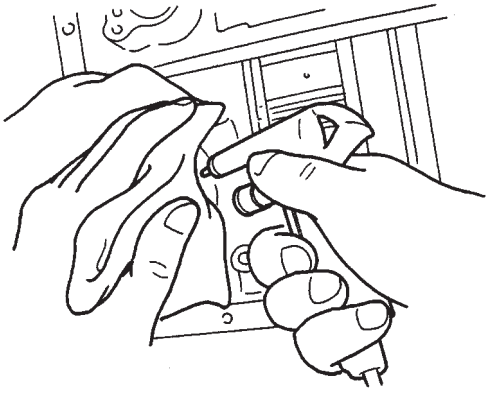

1. C1 accumulator piston
2. C2 accumulator piston
3. B1 accumulator piston
4. Hole

7) Remove accumulator pistons and springs.
   To remove C1, C2 and B1 accumulator pistons and springs, position a rag on pistons to catch each piston.
   To remove pistons, force low-pressure compressed air (1 kg/cm^2, 15 psi, 100 kPa, max) into hole as shown in figure, and pop each piston into the rag.
   To remove B0 accumulator piston and spring, remove snap ring and accumulator spacer, then remove spring and piston.

NOTE:
Do not push accumulator pistons with fingers or anything before removing them. Pushing them may cause compressed fluid in accumulator to spew out of hole and get to your face and clothes.

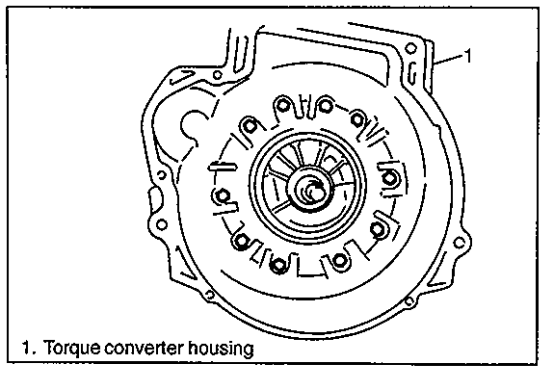

1. Torque converter housing

8) Remove torque converter housing.
   a) Remove housing bolts.
   b) Remove housing while tapping around it lightly with a plastic hammer.

NOTE:
Never reuse housing bolts.

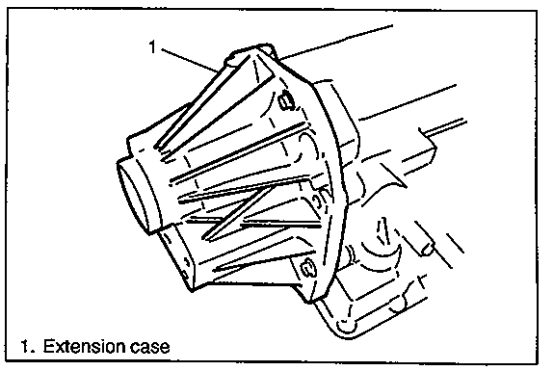

1. Extension case

9) Remove extension case and disconnect output shaft assembly.
   Remove thrust bearing from transmission case.

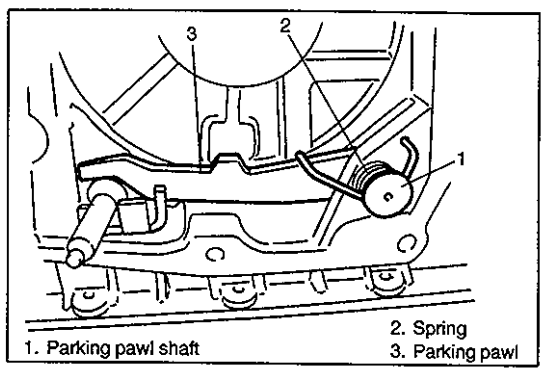

1. Parking pawl shaft
2. Spring
3. Parking pawl

10) Remove parking pawl shaft, spring and then parking pawl.

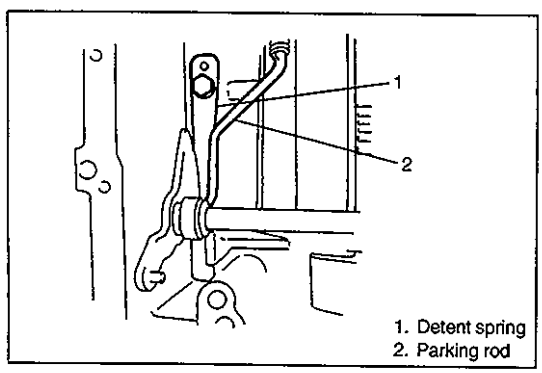

1. Detent spring
2. Parking rod

11) Remove detent spring and parking rod.

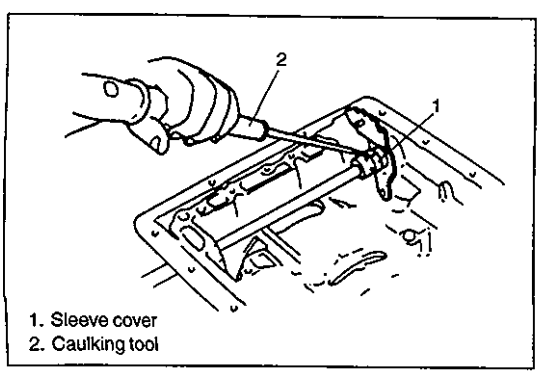

1. Sleeve cover
2. Caulking tool

12) Remove manual shift shaft as follows, if necessary.
   a) Remove sleeve cover by using caulking tool.

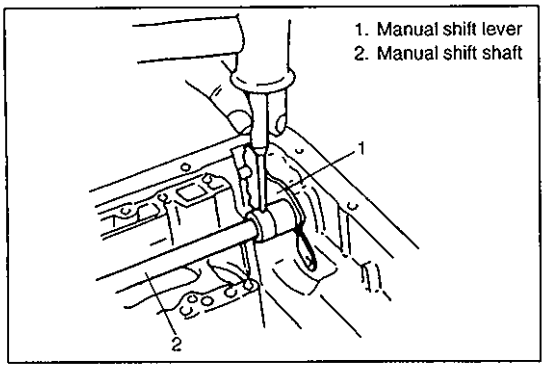

b) Using a punch, drive out manual shift lever pin, pull out manual shift shaft and remove manual shift lever. Then remove sleeve cover from manual shift lever.
Remove oil seal from both sides of transmission case and replace as necessary.

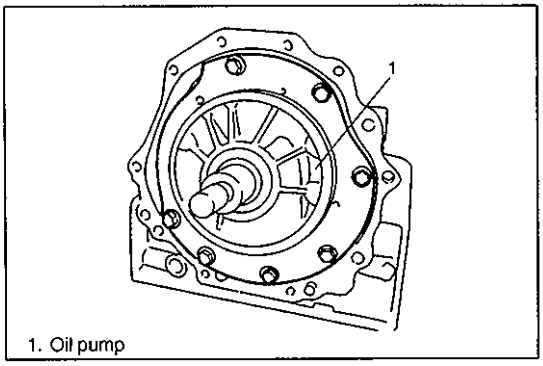

13) Remove oil pump.

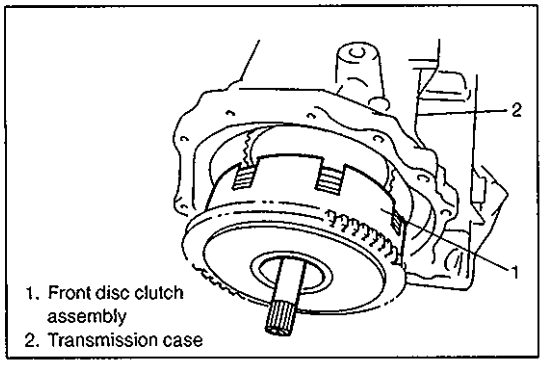

14) Remove front disc clutch assembly.

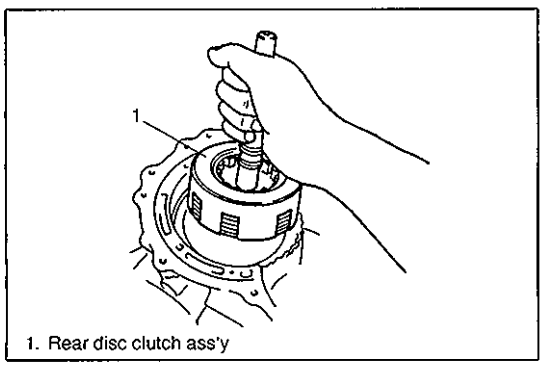

15) Remove rear disc clutch assembly.

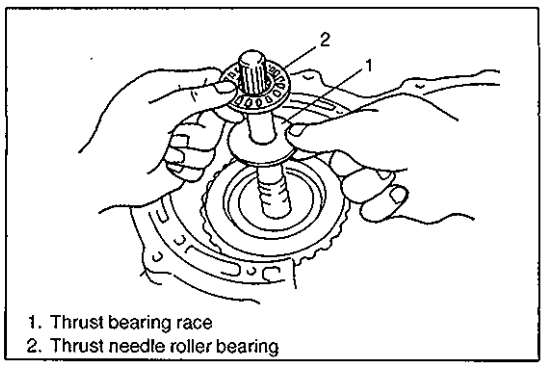

16) Remove thrust bearing race and thrust needle roller bearing.

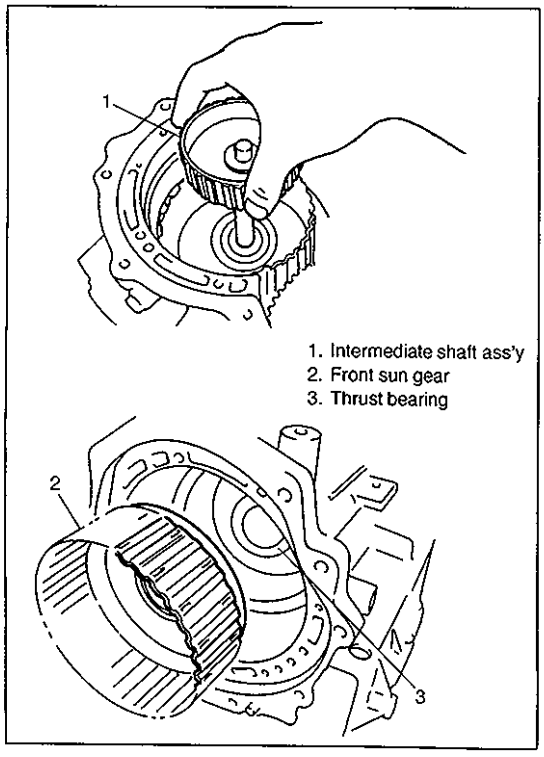

1. Intermediate shaft ass'y
2. Front sun gear
3. Thrust bearing

17) Remove intermediate shaft assembly and front sun gear.

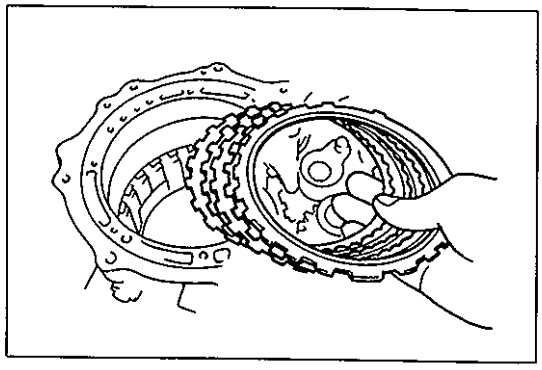

18) Remove B0 brake snap ring, brake flanges, brake discs and brake plates.

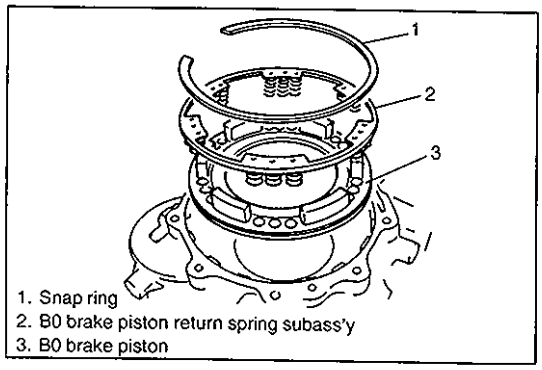

1. Snap ring
2. B0 brake piston return spring subass'y
3. B0 brake piston

19) Remove snap ring then remove B0 brake piston return spring subassembly and B0 brake piston & drum ass'y.

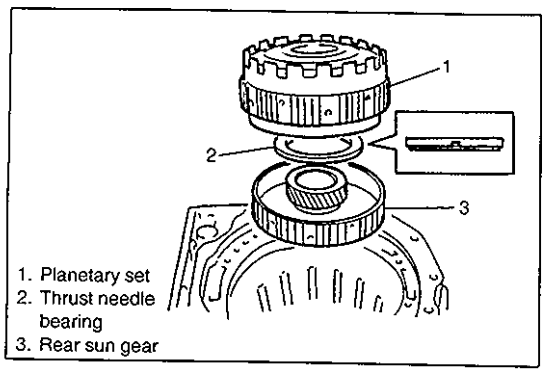

1. Planetary set
2. Thrust needle bearing
3. Rear sun gear

20) Remove planetary carrier ass'y, thrust needle bearing and rear sun gear.

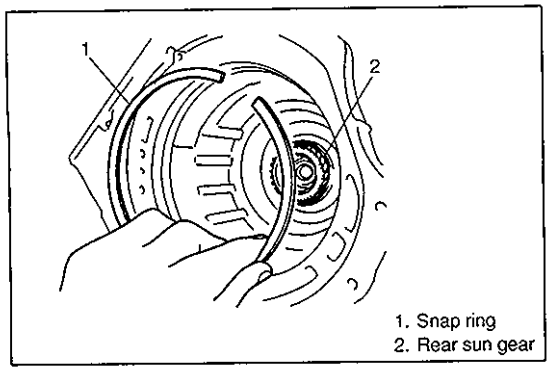

1. Snap ring
2. Rear sun gear

21) Remove B2 brake snap ring, brake flange, brake discs, brake plates and cushion plate.

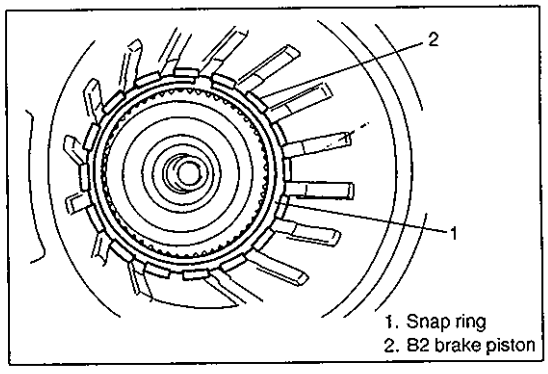

1. Snap ring
2. B2 brake piston

22) Remove B1 brake snap ring, brake flange, brake discs and brake plates.

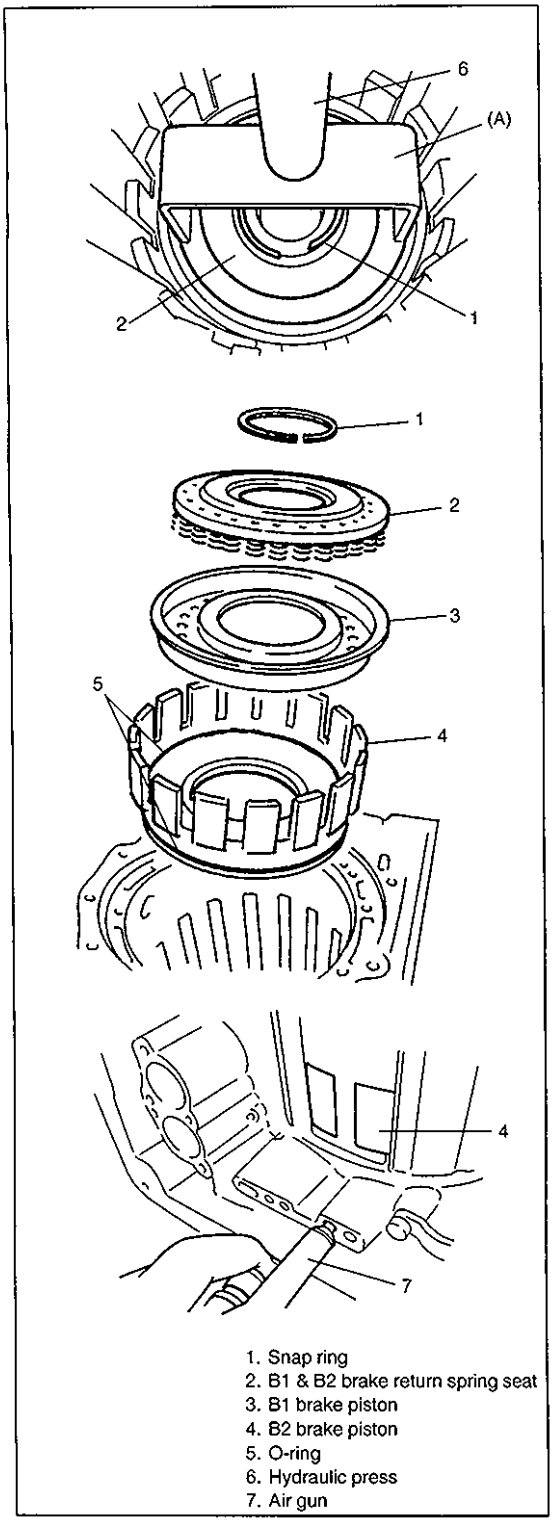

1. Snap ring
2. B1 & B2 brake return spring seat
3. B1 brake piston
4. B2 brake piston
5. O-ring
6. Hydraulic press
7. Air gun

23) Use hydraulic press and special tool to compress return spring seat, then remove snap ring.

Special Tool:
(A): 09926-96010

NOTE:
Do not compress wave spring more than necessary.

Remove spring seat and B1 brake piston from B2 brake piston.

24) Remove B2 brake piston.
To remove B2 brake piston, force low-pressure compress air (1kg/cm^2, 15psi, 100kPa max) into hole shown in figure, and pop out piston into a rag.

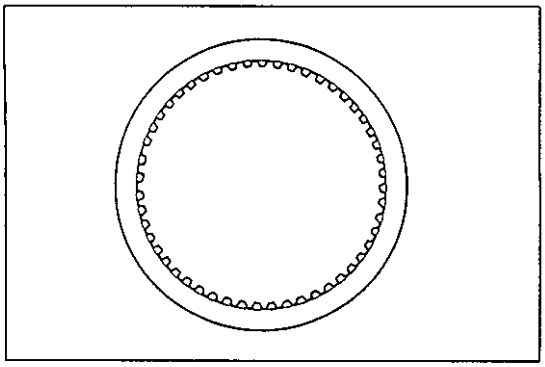

INSPECTION

Clutch and Brake Discs

Dry and inspect them for pitting, burn flaking, wear, glazing, cracking, charring and chips or metal particles imbedded in lining. If discs show any of the above conditions, replacement is required.

NOTE:

- **If disc lining is exfoliated or discolored, replace all discs.**
- **Before assembling new discs, soak them in A/T fluid for at least two hours.**

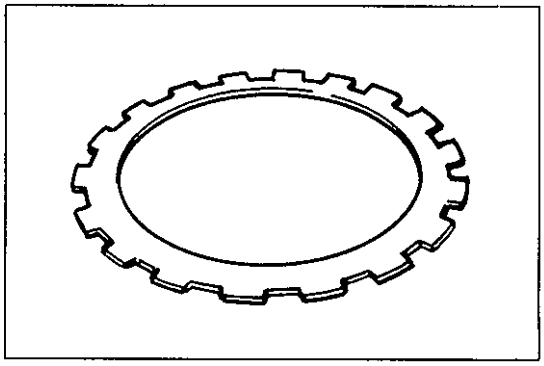

Clutch and Brake Plates and Flanges

Dry plates and check for discoloration. If plate surface is smooth and even color smear is indicated, the plate should be reused. If severe heat spot discoloration or surface scuffing is indicated, the plate must be replaced.

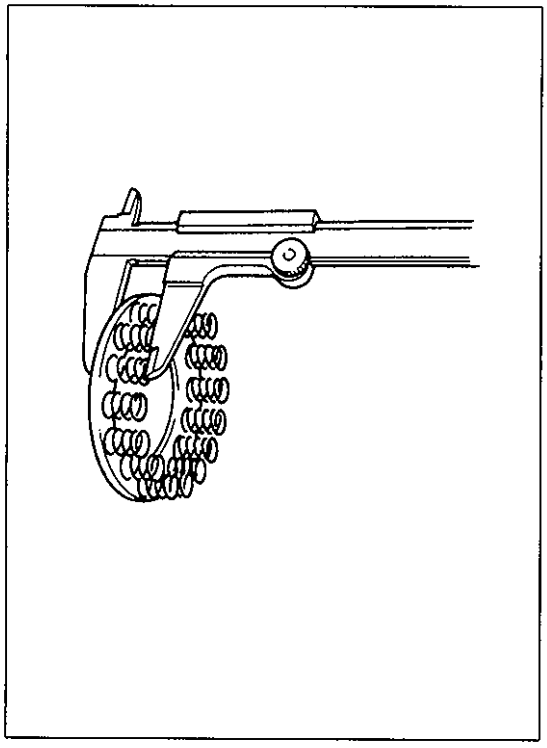

Brake Piston Return Spring Subassembly

Measure height of B1 & B2 and B0 brake piston return springs.

Specified value:

15.62 mm (6.15 in.) (B1 & B2 return spring ass'y)
15.19 mm (5.98 in.) (B0 return spring ass'y)

NOTE:

- **Do not apply excessive force when measuring spring height.**
- **Perform measurement at several points.**

Evidence of extreme heat or burning in the area of clutch may have caused springs to take a heat set and would require their replacement.

DISASSEMBLY OF SUBASSEMBLY

CAUTION:

- Keep component parts in group for each subassembly and avoid mixing them up.
- Clean all parts with cleaning solvent thoroughly and air dry them.
- Use kerosene or automatic transmission fluid as cleaning solvent.
- Do not use wiping cloths or rags to clean or dry parts.
- All oil passages should be blown out and checked to make sure that they are not obstructed.
- Keep face and eyes away from solvent spray while air blowing parts.
- Check mating surface for irregularities and remove them, if any, and clean it again.
- Soak new clutch discs and brake discs in transmission fluid for at least 2 hours before assembly.
- Replace all gaskets and O-rings with new ones.
- Apply automatic transmission fluid to all O-rings.
- When installing seal ring, be careful so that it is not expanded excessively, extruded or caught.
- Replace oil seals that are removed and apply grease to their lips.
- Before installing, be sure to apply automatic transmission fluid to sliding, rolling and thrusting surface of all component part. Also after installation, make sure to check each part for proper operation.
- Always use torque wrench when tightening bolts.

OIL PUMP

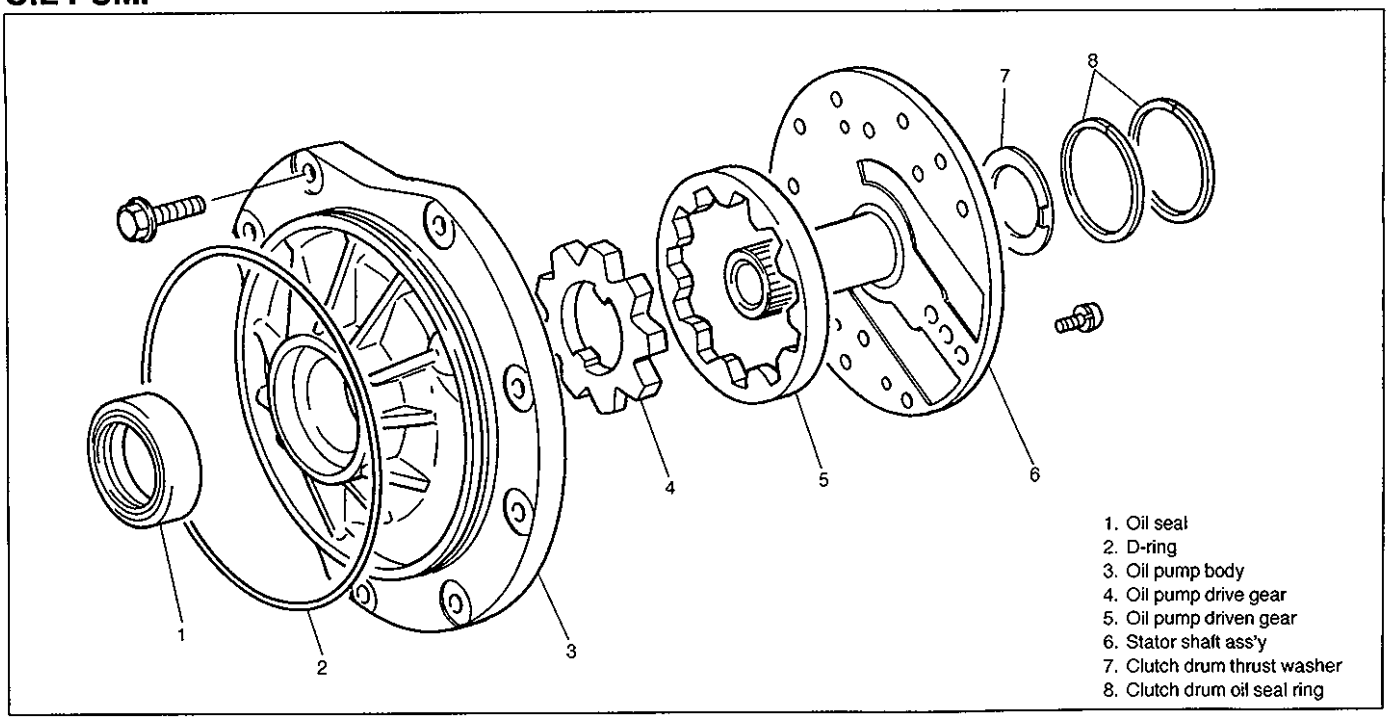

1. Oil seal
2. D-ring
3. Oil pump body
4. Oil pump drive gear
5. Oil pump driven gear
6. Stator shaft ass'y
7. Clutch drum thrust washer
8. Clutch drum oil seal ring

DISASSEMBLY

1) Remove D-ring from pump body.
2) Remove 2 oil seal rings and clutch drum thrust washer.
3) Remove 11 bolts.
4) Separate pump body from stator shaft ass'y.
5) Remove oil seal from pump body.

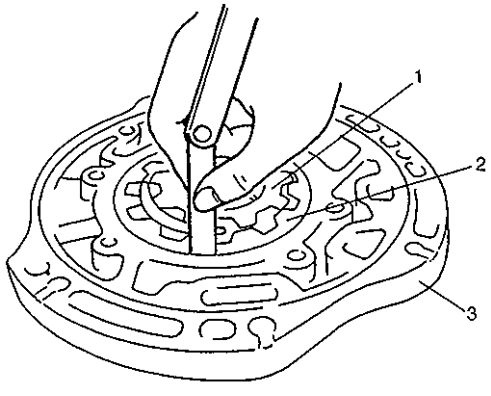

1. Oil pump drive gear
2. Driven gear
3. Body

INSPECTION

1) Inspect pump body oil seal.
   Check for wear, damage or cracks.
   Replace oil seal if necessary and apply grease to its lip portion slightly when it is installed.
2) Check body clearance of driven gear.
   Push driven gear to one side of body. Using a feeler gauge, measure clearance between driven gear and body.
   If clearance exceeds its standard value, replace oil pump ass'y.

Body Clearance

Standard : 0.08 – 0.15 mm (0.0027 – 0.0059 in.)
Limit : 0.30 mm (0.018 in.)

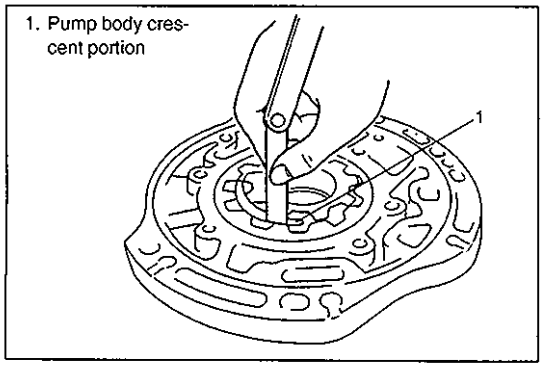

3) Check tip clearance of both drive and driven gears.
Measure radial clearance between gear tooth and crescent.
If clearance exceeds its standard value, replace oil pump ass'y.

Tip Clearance
Standard : 0.13 – 0.20 mm (0.0051 – 0.0079 in.)
Limit : 0.30 mm (0.018 in.)

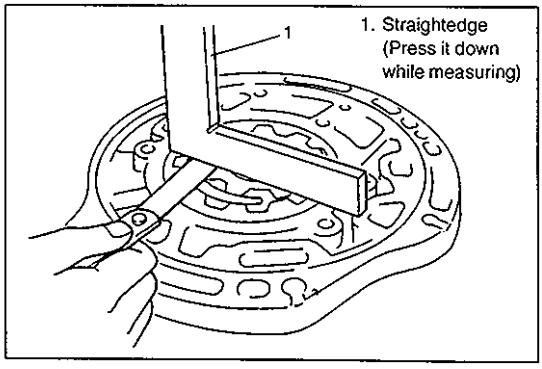

4) Check side clearance of both gears.
Using a straightedge and a feeler gauge, measure side clearance between gear and pump body.
If clearance exceeds its standard value, replace oil pump ass'y.

Side Clearance
Standard: 0.02 – 0.04 mm (0.0008 – 0.0019 in.)

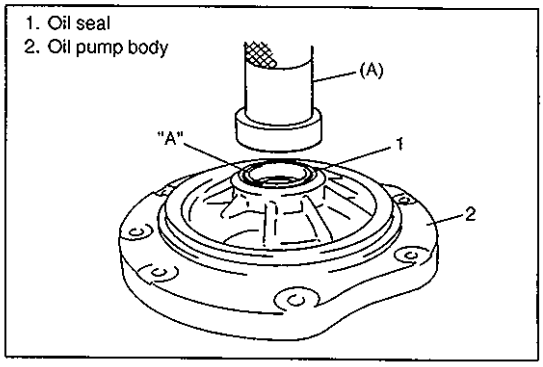

ASSEMBLY

1) Install pump body oil seal.
Use special tool and hammer to install it, and then apply grease to its lip portion.

Special Tool
(A): 09913-85210

"A": SUZUKI SUPER GREASE C, 99000-25030

2) Install driven gear and drive gear to pump body after applying A/T fluid to gears.

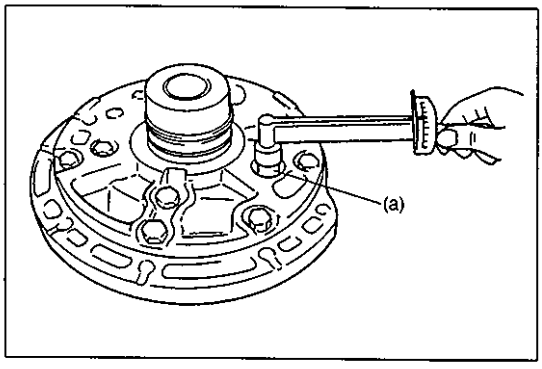

3) Install stator shaft ass'y to pump body and tighten 11 pump cover bolts to specification.

Tightening Torque
(a): 10 N·m (1.0 kg-m, 7.5 lb-ft)

4) Install 2 new oil seal rings to stator shaft.
5) Apply grease to 2 oil seal rings.
6) Install D-ring applied with grease and make sure that it is not twisted or extruded.
7) Check drive gear for smooth rotation.

FRONT CLUTCH (C1 CLUTCH)

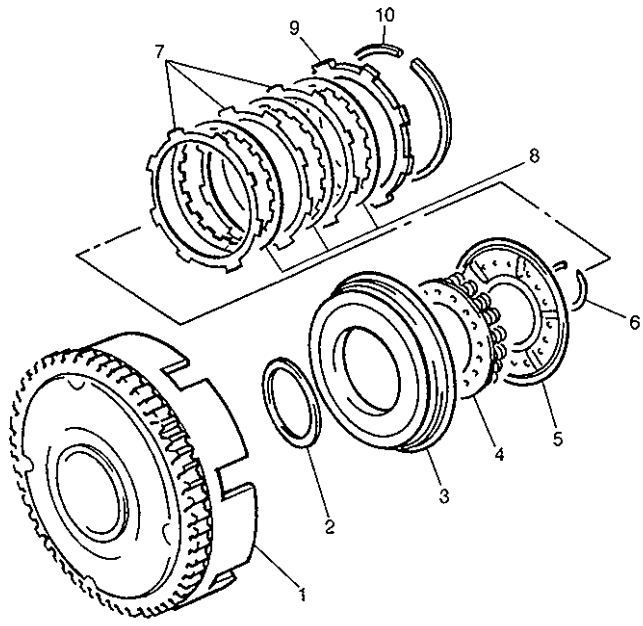

1. Front clutch No.1 drum
2. D-ring
3. Front clutch piston
4. Front clutch return spring seat
5. Front clutch balancer
6. Shaft snap ring
7. Clutch plate
8. Clutch disc
9. Clutch flange
10. Snap ring

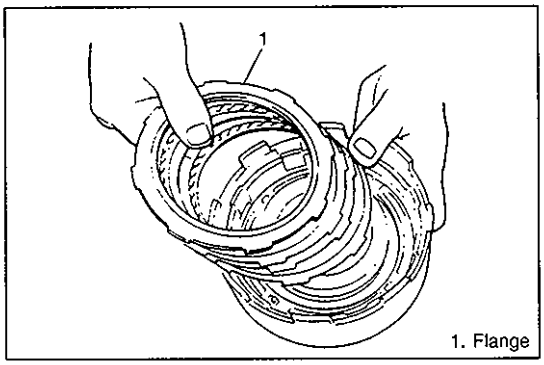

1. Flange

DISASSEMBLY

1) Remove snap ring.
2) Remove flange, discs and plates.

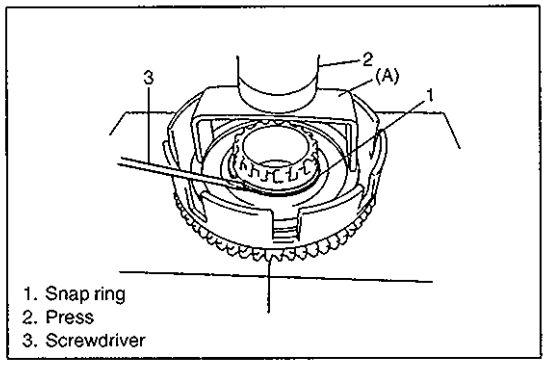

1. Snap ring
2. Press
3. Screwdriver

3) Remove shaft snap ring.
Compress piston return springs and remove shaft snap ring. Place special tool (clutch spring compressor) on spring seat and compress spring with a press, and then remove shaft snap ring, using a screwdriver.

CAUTION:
Do not push down return spring more than necessary.

Special Tool
(A): 09926-96010

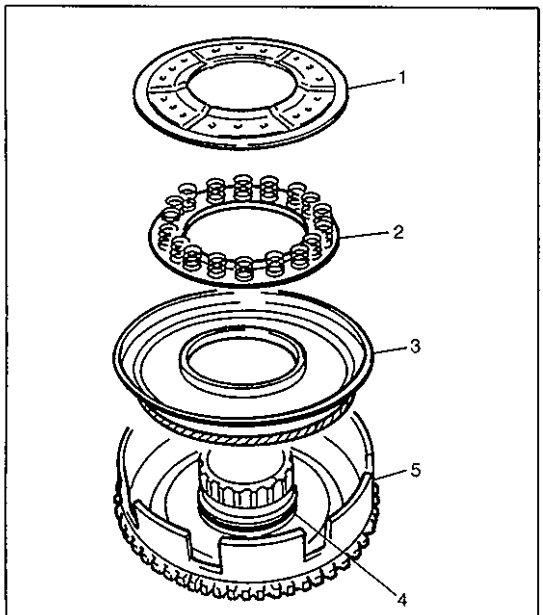

1. Front clutch balancer
2. Front clutch return spring seat
3. Front clutch piston
4. D-ring
5. Front clutch No.1 drum

4) Remove front clutch balancer and front clutch return spring seat.
5) Remove front clutch piston.
   Blow compressed air through input shaft oil hole to remove piston. If piston does not pop out, take it out with long nose pliers.
6) Remove D-ring from front clutch No.1 drum.

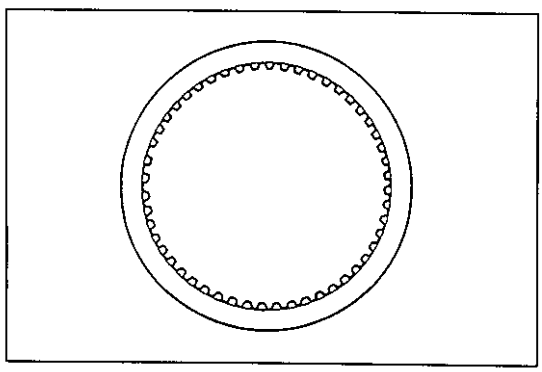

INSPECTION

Clutch Discs, Plates and Flange

Check that sliding surfaces of discs, plates and flanges are not worn or burnt. If necessary, replace.

NOTE:

- **If disc lining is exfoliated or discolored, replace all discs.**
- **Before assembling new discs, soak them in A/T fluid for at least two hours.**

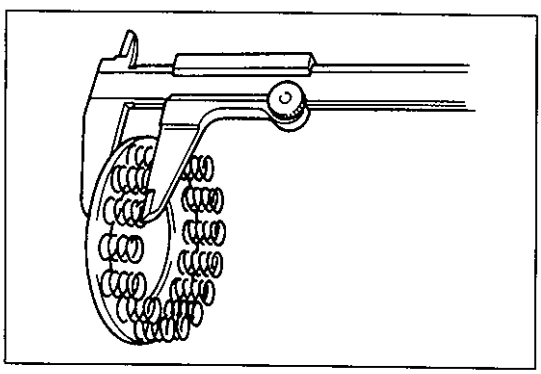

Front Clutch Return Spring Seat

Measure height of front clutch return spring.

Specified value: 14.85 mm (0.585 in.)

NOTE:

- **Do not apply excessive force when measuring spring height.**
- **Perform measurement at several points.**

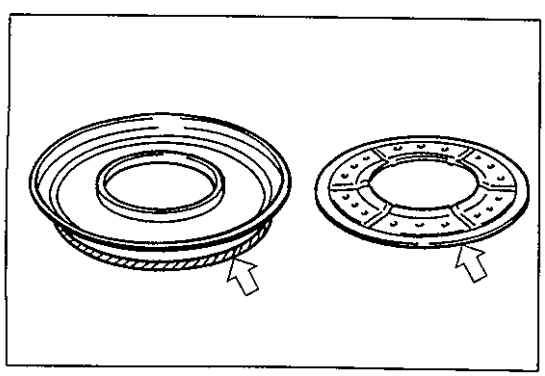

Front Clutch Piston Lip and Front Clutch Balancer Lip

Check each lip for wear, deformation, cut, and/or hardening. If necessary, replace.

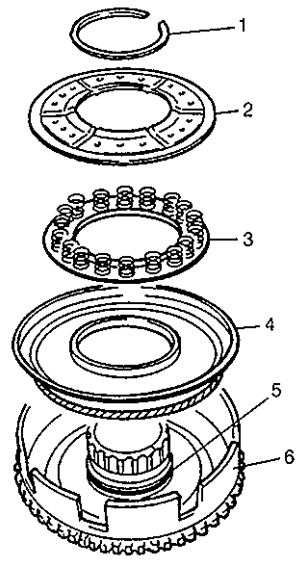

1. Snap ring
2. Front clutch balancer
3. Front clutch return spring seat
4. Front clutch piston
5. D-ring
6. Front clutch No.1 drum

ASSEMBLY

1) Install new D-ring to front clutch No.1 drum.
   Apply grease to D-ring and fit it to drum.

   Grease 99000-25030

2) Install piston into front clutch No.1 drum.
   Use care that the piston lip does not get twisted or caught.
   Apply grease to the lip of the piston.

   Grease 99000-25030

3) Install front clutch return spring seat and front clutch balancer.

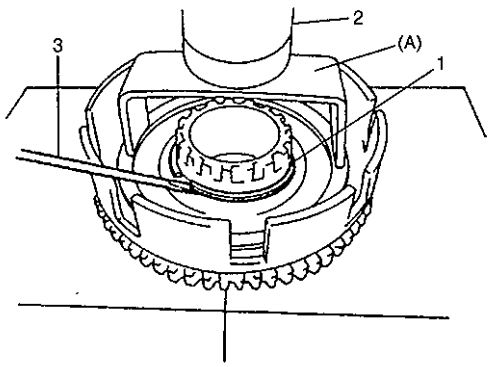

1. Shaft snap ring
2. Press
3. Screwdriver

4) Install shaft snap ring.
   Compress return springs and install shaft snap ring in groove by using a screwdriver.
   Place special tool (clutch spring compressor) on spring seat and compress springs with a press.

CAUTION:
Do not compress return spring more than necessary.

Special Tool
(A): 09926-96010

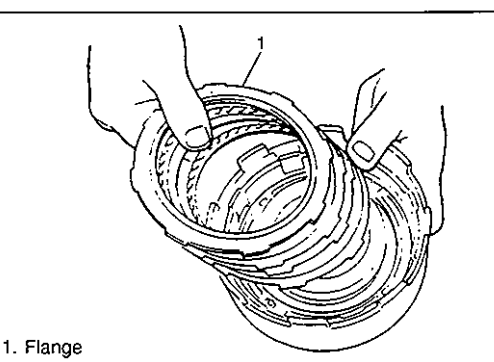

1. Flange

5) Install discs, plates and flange in following order.
   ① Plate → ② Disc → ③ Plate → ④ Disc → ⑤ Plate → ⑥ Disc → ⑦ Flange

NOTE:
Before assembly, new discs should be soaked in automatic transmission fluid for at least 2 hours.

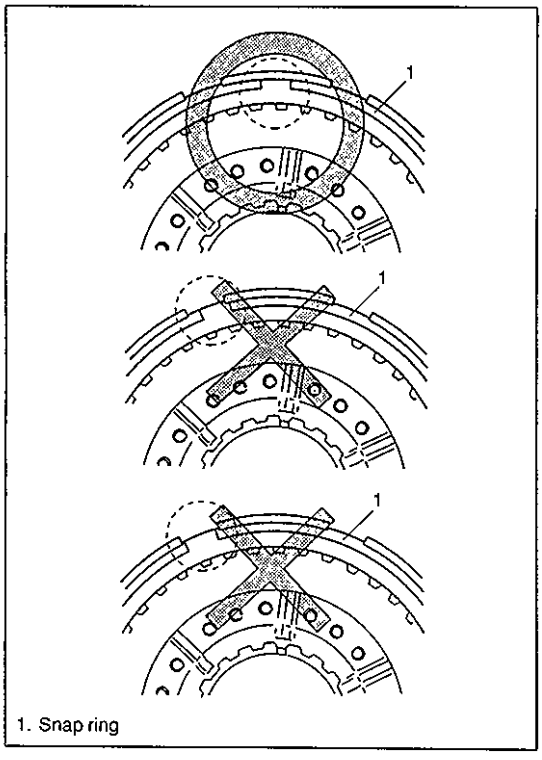

1. Snap ring

6) Install snap ring.

NOTE:
Make sure that the ends of the snap ring do not come to the opening of the front clutch No.1 drum.

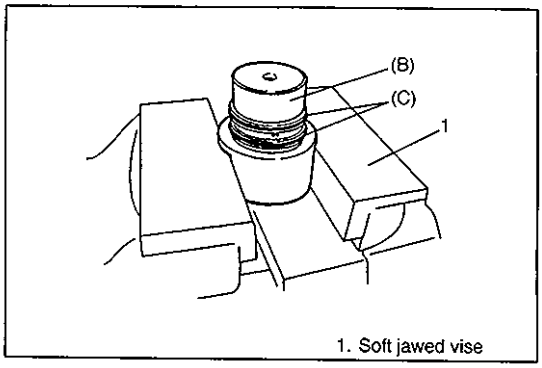

1. Soft jawed vise

7) Place special tool (B) on soft jawed vise and install 2 oil seal rings on special tool.
Special Tool
(B) : 09926-26030
SUZUKI GENUINE PARTS
(C): Clutch oil seal set 22860-81AT0
NOTE:
- **Clutch oil seal set has two oil seal rings in a set.**
- **Do not use the oil seal rings removed from oil pump ass'y. It is not necessary to remove oil seal rings from special tool once installed.**

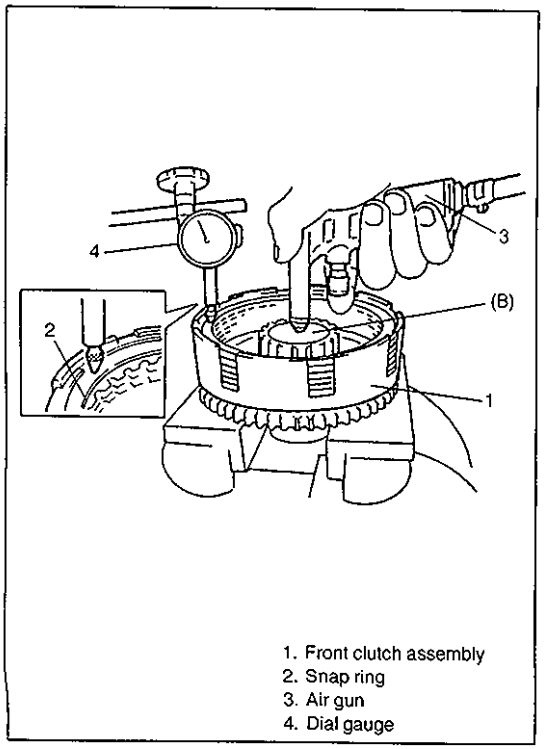

1. Front clutch assembly
2. Snap ring
3. Air gun
4. Dial gauge

8) Place front clutch assembly on special tool (B).
9) Set dial gauge on the top of clutch flange and measure clearance by blowing compressed air (4kg/cm^2, psi) as shown in figure.

Clearance : 0.65 – 1.20 mm (0.026 – 0.047 in.)

If the clearance is out of specification, use clutch flange of different, thickness to match the clearance to specification. Follow 5 types of clutch flanges are available as spare parts.

Available clutch flange size (thickness)	2.750 mm (0.108 in.)
	2.875 mm (0.113 in.)
	3.000 mm (0.118 in.)
	3.125 mm (0.123 in.)
	3.250 mm (0.128 in.)
	3.375 mm (0.133 in.)
	3.500 mm (0.138 in.)

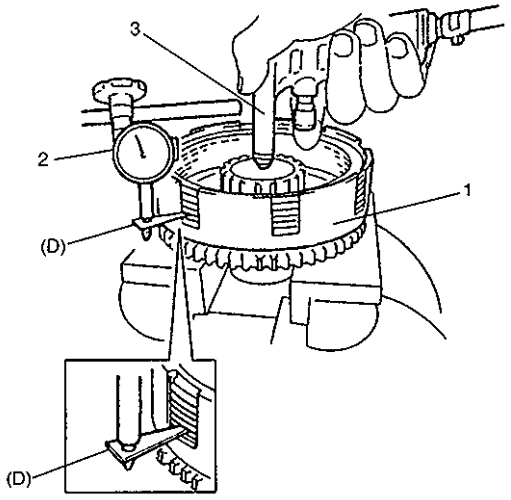

1. Front clutch assembly
2. Dial gauge
3. Air gun

10) Attach special tool (D) to dial gauge and set them on the lowest clutch plate.

Special Tool
(D): 09952-06010

Measure piston stroke by blowing compressed air (4kg/cm^2, 56.9psi) as shown in figure.

Piston Stroke : 0.95 – 1.20 mm (0.037 – 0.047 in.)

If the piston stroke is out of specification, use clutch flange of different thickness to match the piston stroke to specification. Follow 5 types of clutch flanges are available as spare parts.

Available clutch flange size (thickness)	2.750 mm (0.108 in.)
	2.875 mm (0.113 in.)
	3.000 mm (0.118 in.)
	3.125 mm (0.123 in.)
	3.250 mm (0.128 in.)
	3.375 mm (0.133 in.)
	3.500 mm (0.138 in.)

REAR CLUTCH (C2 CLUTCH)

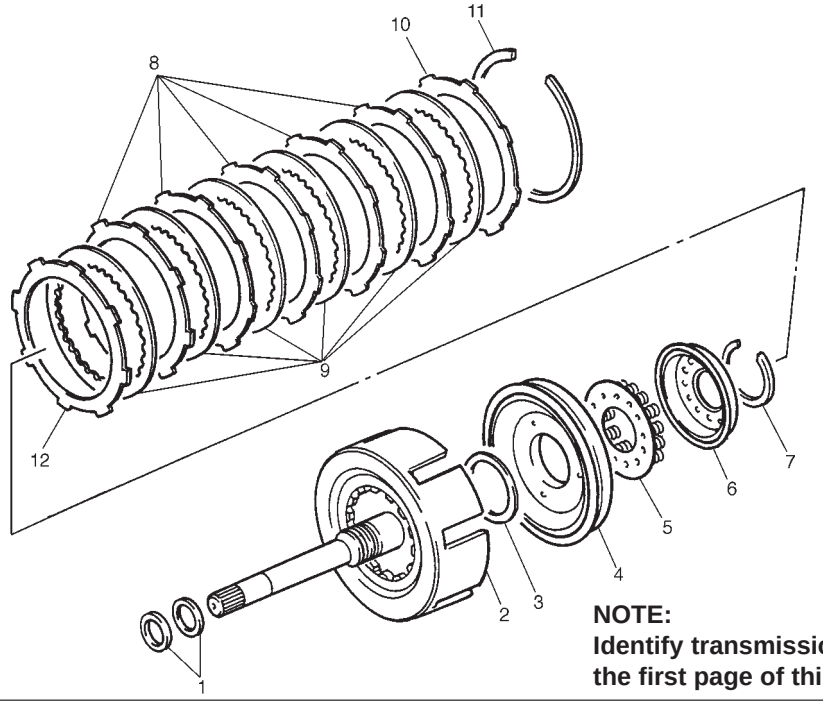

1. Input shaft oil seal ring
2. Input shaft subassembly
3. D-ring
4. Rear clutch piston
5. Rear clutch return spring seat
6. Rear clutch balancer
7. Shaft snap ring
8. Clutch plate
9. Clutch disc
10. Clutch flange
11. Snap ring
12. Clutch flange (Type-1) or Clutch plate (Type-2) See NOTE.

NOTE:
Identify transmission type by VIN listed on the first page of this section.

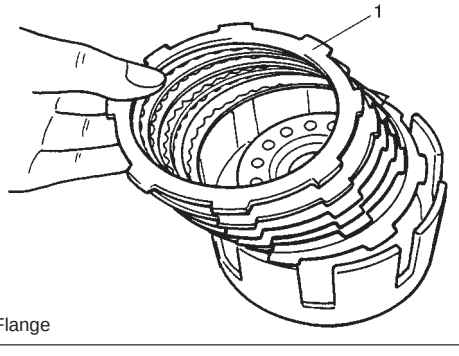

1. Flange

DISASSEMBLY

1) Remove snap ring.
2) Remove flange, discs and plates.

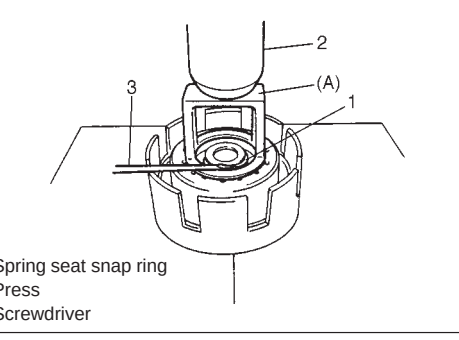

1. Spring seat snap ring
2. Press
3. Screwdriver

3) Remove shaft snap ring.
Compress piston return springs and remove shaft snap ring. Place special tool (clutch spring compressor) on spring seat and compress spring with a press, and then remove shaft snap ring, using a screwdriver.

CAUTION:
Do not push down return spring more than necessary.

Special Tool
(A): 09926-96020

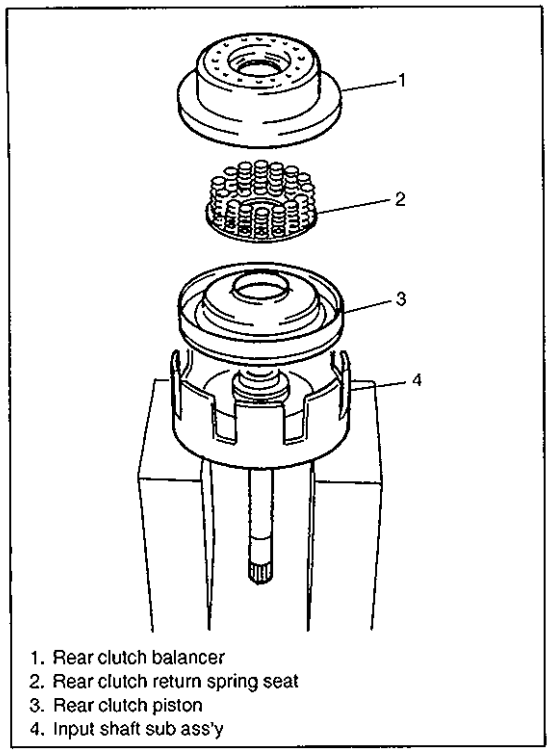

1. Rear clutch balancer
2. Rear clutch return spring seat
3. Rear clutch piston
4. Input shaft sub ass'y

4) Remove rear clutch balancer and rear clutch return spring seat.
5) Remove rear clutch piston.
   If piston does not pop out, blow compressed air through input shaft oil hole to remove piston.
6) Remove D-ring, and oil seals from input shaft subass'y.

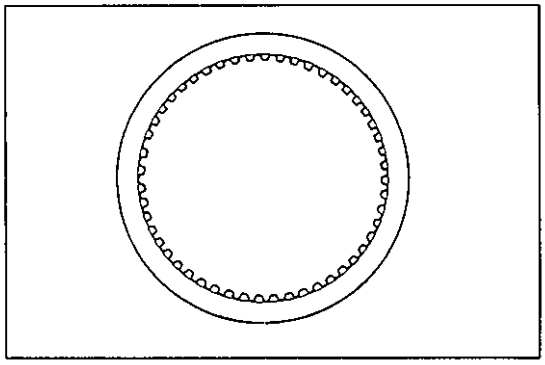

INSPECTION

Clutch Discs, Plates and Flange

Check that sliding surfaces of discs, plates and flanges are not worn or burnt. If necessary, replace.

NOTE:

- **If disc lining is exfoliated or discolored, replace all discs.**
- **Before assembling new discs, soak them in A/T fluid for at least two hours.**

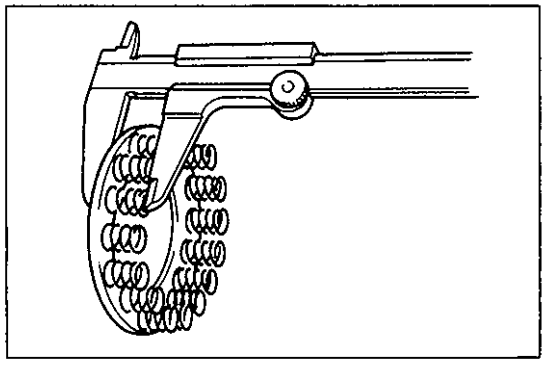

Rear Clutch Return Spring Seat

Measure height of overdrive clutch return spring.

Specified value: 28.14 mm (1.108 in.)

NOTE:

- **Do not apply excessive force when measuring spring height.**
- **Perform measurement at several points.**

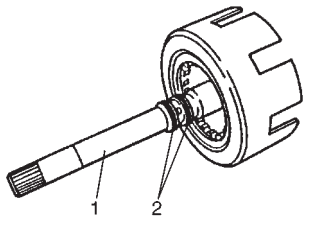

1. Input shaft subass'y
2. Oil seal

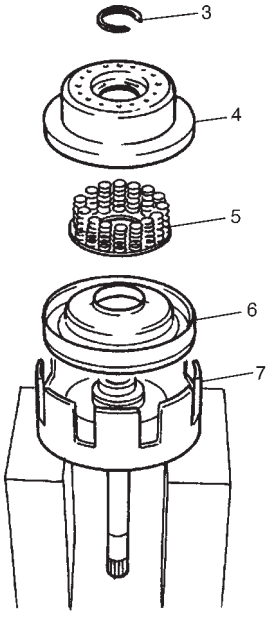

3. Snap ring
4. Rear clutch balancer
5. Rear clutch return spring seat
6. Rear clutch piston
7. Input shaft subass'y

ASSEMBLY

1) Install new D-ring and oil seals to input shaft subass'y.
   Apply grease to D-ring and fit it to input shaft subass'y.

   Grease 99000-25030

2) Install piston into input shaft subass'y.
   Apply grease to the lip of the piston.

   Grease 99000-25030

   Use care that the lip does not get twisted or caught.
3) Install rear clutch return spring seat and rear clutch balancer.

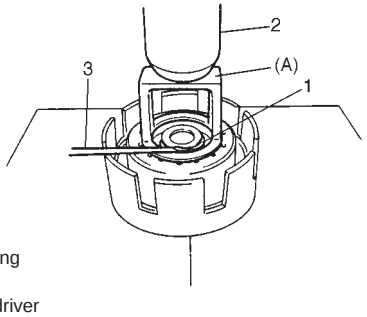

1. Snap ring
2. Press
3. Screwdriver

4) Install shaft snap ring.
   Compress return springs and install shaft snap rings in groove by using a screwdriver.
   Place special tool (clutch spring compressor) on spring seat and compress springs with a press.

> **CAUTION:**
> **Do not compress return spring more than necessary.**

Special Tool
(A): 09926-96020

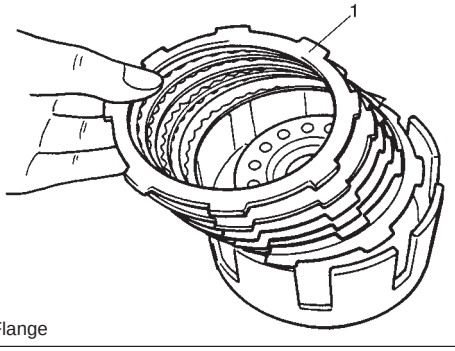

1. Flange

5) Install discs, plates and flanges in following order.
   ① Flange (Type-1) or Plate (Type-2) → ② Disc → ③ Plate → ④ Disc → ⑤ Plate → ⑥ Disc → ⑦ Plate → ⑧ Disc → ⑨ Plate → ⑩ Disc → ⑪Plate → ⑫Disc → ⑬Flange

NOTE:

- **Before assembly, new discs should be soaked in automatic transmission fluid for at least 2 hours.**
- **Identify transmission type by VIN listed on the first page of this section.**

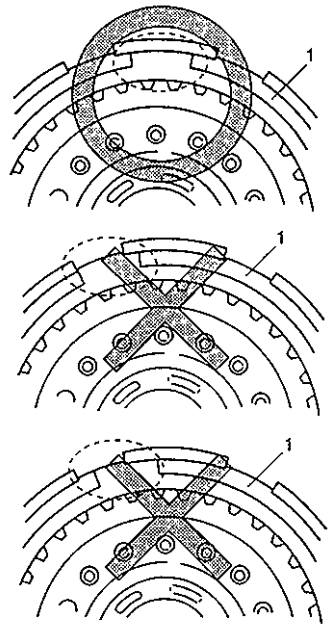

1. Snap ring

6) Install snap ring.

NOTE:
Make sure that the ends of the snap ring do not come to the opening of the input shaft subass'y.

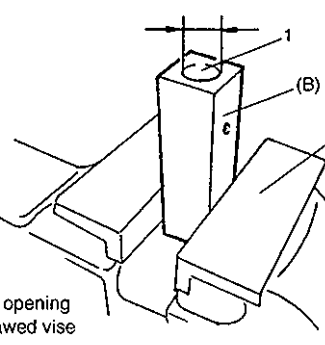

1. Wider opening
2. Soft jawed vise

7) Place special tool (B) on soft jawed vise with wider opening facing up.

Special Tool
(B): 09926-26040

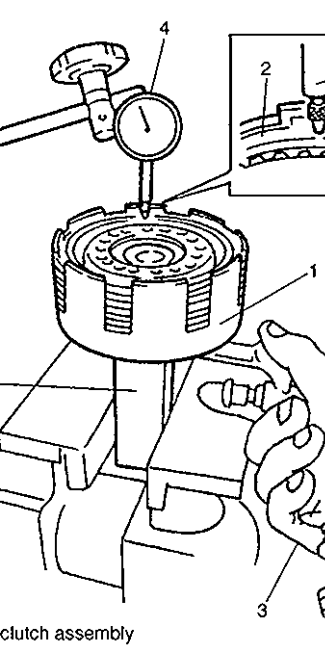

1. Rear clutch assembly
2. Clutch flange
3. Air gun
4. Dial gauge

8) Place rear clutch assembly on special tool (B).
9) Set dial gauge on the top of clutch flange and measure clearance by blowing compressed air (4kg/cm^2, psi) as shown in figure.

Clearance : 1.10 – 1.85 mm (0.051 – 0.073 in.)

If the clearance is out of specification, use clutch flange of different thickness to match the clearance to specification. Follow 5 types of clutch flanges are available as spare parts.

Available clutch flange size (thickness)	2.75 mm (0.108 in.)
	2.90 mm (0.114 in.)
	3.05 mm (0.120 in.)
	3.20 mm (0.126 in.)
	3.35 mm (0.132 in.)
	3.50 mm (0.138 in.)
	3.65 mm (0.144 in.)

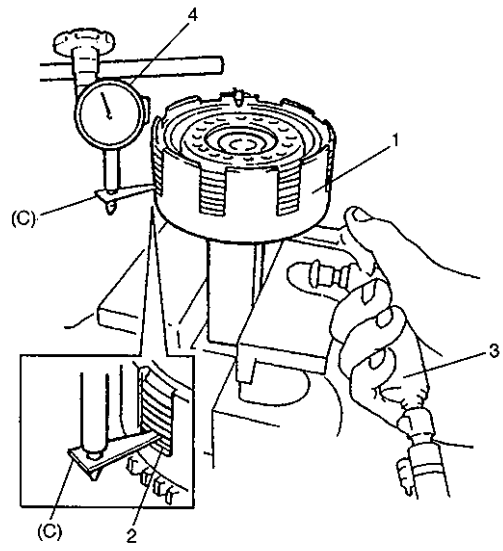

1. Rear clutch assembly
2. Lowest clutch plate
3. Air gun
4. Dial gauge

10) Attach special tool (C) to dial gauge and set them on the lowest clutch plate.

Special Tool
(C): 09952-06010

Measure piston stroke by blowing compressed air (4kg/cm^2, psi) as shown in figure.

Piston Stroke : 1.60 – 1.85 mm (0.063 – 0.073 in.)

If the piston stroke is out of specification, use clutch flange of different thickness to match the piston stroke within specification. Follow 5 types of clutch flanges are available as spare parts.

Available clutch flange size (thickness)	2.75 mm (0.108 in.)
	2.90 mm (0.114 in.)
	3.05 mm (0.120 in.)
	3.20 mm (0.126 in.)
	3.35 mm (0.132 in.)
	3.50 mm (0.138 in.)
	3.65 mm (0.144 in.)

PLANETARY SET

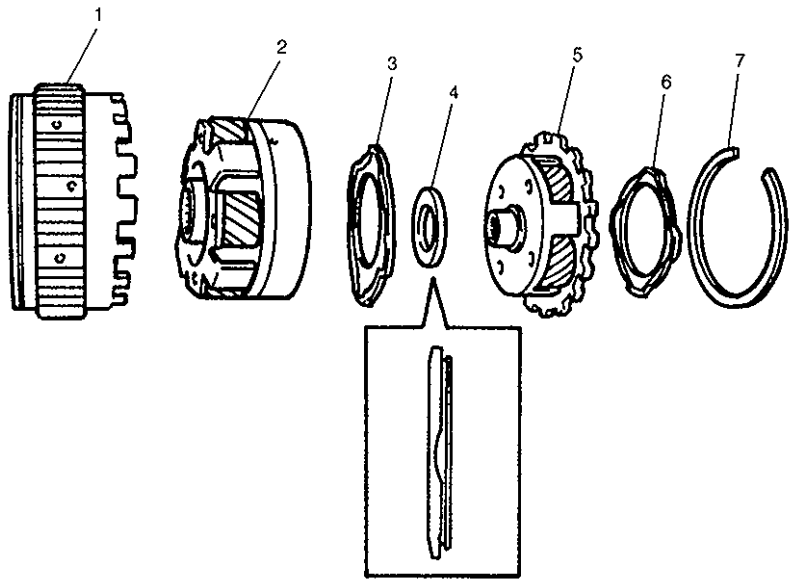

1. Rear ring gear
2. Rear carrier ass'y
3. Planetary oil receiver No.2
4. Thrust needle roller bearing
5. Front carrier ass'y
6. Planetary oil receiver No.1
7. Snap ring

DISASSEMBLY

1) Remove snap ring.
   Remove front carrier ass'y.
2) Remove planetary oil receiver No.1 from rear carrier ass'y.
3) Remove rear carrier ass'y
4) Remove needle roller bearing and planetary oil receiver No.2 from planetary gear ass'y No.2.

1. Planetary oil receiver No.1
2. Planetary oil receiver No.2

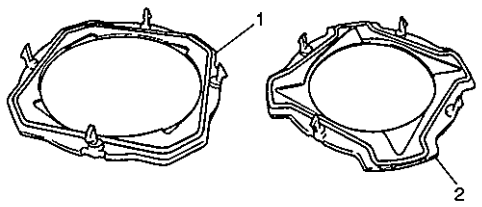

INSPECTION

Planetary Oil Receiver No.1 and No.2

Inspect the seal and the claw for deterioration, damage or cut.
If found faulty, replace.

ASSEMBLY

Reverse removal procedure for installation noting following points.

- Note the direction of needle roller bearing.
- Take care not to break the claw of oil receiver.
- Oil receiver has installation position.
  Make sure that all claws are aligned with holes before inserting them.

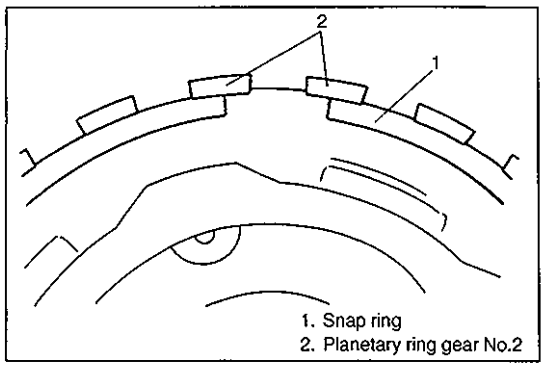

1. Snap ring
2. Planetary ring gear No.2

- Note the location of the ends of the snap ring.

VALVE BODY

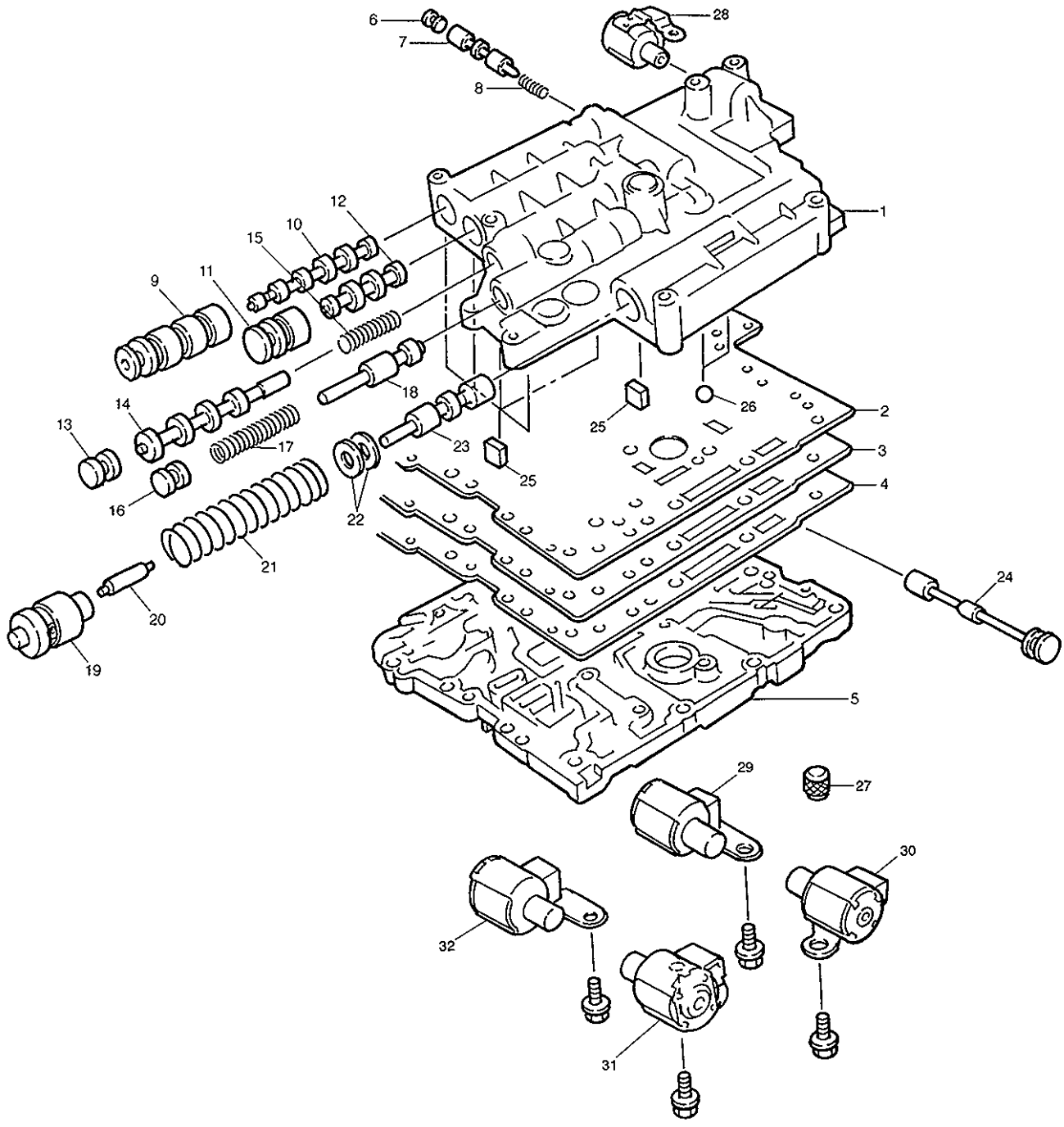

1. Upper valve body
2. Gasket for upper valve body
3. Valve body plate
4. Gasket for lower valve body
5. Lower valve body
6. Plug
7. Signal valve
8. Signal valve spring
9. Fail valve No.1 sleeve
10. Fail valve No.1
11. Fail valve No.2 sleeve
12. Fail valve No.2
13. Plug
14. Lock-up control valve
15. Lock-up control valve spring
16. Plug
17. Secondary regulator valve spring
18. Secondary regulator valve
19. Primary regulator valve sleeve
20. Primary regulator valve plunger
21. Primary regulator valve spring
22. Washer plate
23. Primary regulator valve
24. Manual valve
25. Key
26. Steel ball
27. Oil strainer
28. Shift solenoid valve No.2
29. Shift solenoid valve No.4
30. Shift solenoid valve No.3
31. Shift solenoid valve No.1
32. Lock-up solenoid valve

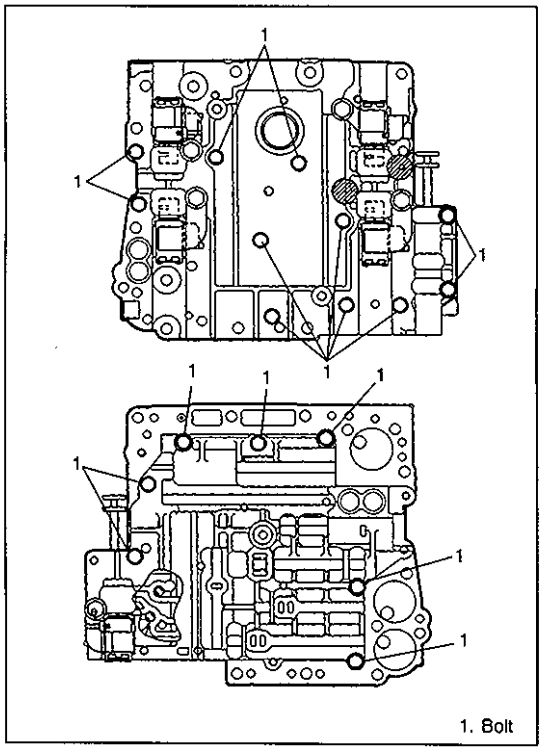

1. Bolt

VALVE BODY ASS'Y

Disassembly

1) Remove manual valve.
2) Remove 18 bolts from lower valve body.

NOTE:

- **There are 4 different kinds of bolt fixing upper and lower valve body. Do not mix them up and remember where they belong to.**
- **When separating lower and upper valve body, be careful not to let the steel ball to fall off.**

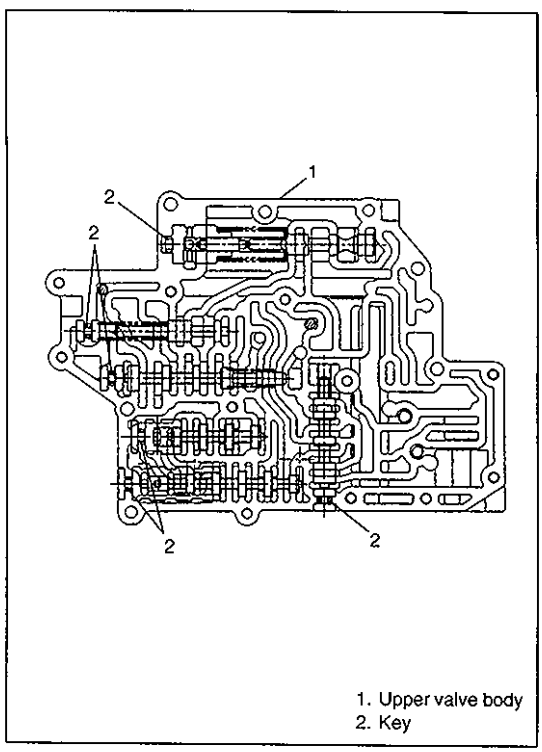

1. Upper valve body
2. Key

UPPER VALVE BODY

Disassembly

1) Remove shift solenoid No.2.
2) Remove sleeves, springs, washers, plunger and valves by removing keys.
3) Remove oil strainer.

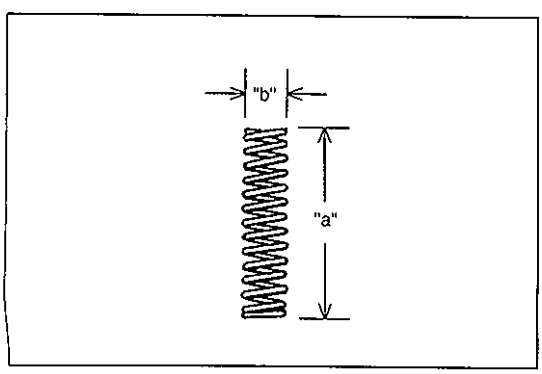

Reference

Spring	Color of Paint	Free length "a"	Outside diameter "b"
Primary regulator valve	Yellow	66.9 mm (2.633 in.)	16.0 mm (0.630 in.)
Signal valve	Blue	20.5 mm (0.807 in.)	6.2 mm (0.244 in.)
Lock-up control valve	—	29.5 mm (1.161 in.)	8.8 mm (0.346 in.)
Secondary regulator valve	Blue	38.7 mm (1.524 in.)	8.8 mm (0.346 in.)

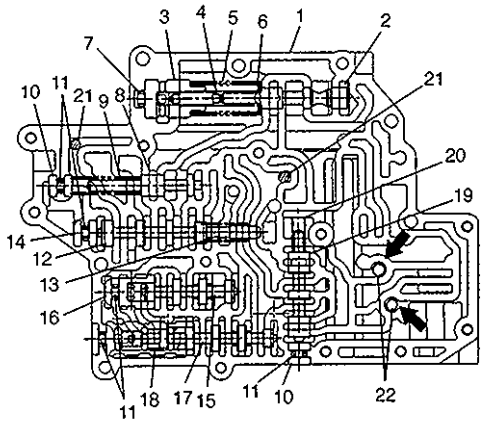

1. Upper valve body
2. Primary regulator valve
3. Primary regulator valve sleeve
4. Primary regulator valve plunger
5. Compression spring (yellow-painted)
6. Plate washer
7. Key
8. Secondary regulator valve
9. Compression spring (blue-painted)
10. Plug
11. Key
12. Lock-up control valve
13. Compression spring
14. Plug
15. Fail valve No.2
16. Fail valve No.2 sleeve
17. Fail valve No.1
18. Fail valve No.1 sleeve
19. Signal valve
20. Compression spring (blue-painted)
21. Oil strainer
22. Steel ball

Assembly

1) Apply A/T fluid to each valve, plate washer, spring, plunger, sleeve and key.
   Insert valves, plate washers, springs, sleeves and plunger referring to figure on 7B-86 and hold them with keys as shown in left figure.

   NOTE:
   - **Note the location of the key shown in picture.**
   - **Each compression spring has an identification color paint.**
   - **Note the direction of each valve.**

2) Install solenoid valve No.2.

   Tightening Torque for solenoid valve No.2 bolt : 8 N·m (0.8 kg-m, 6.0 lb-ft)

3) Install oil strainer and steel ball.

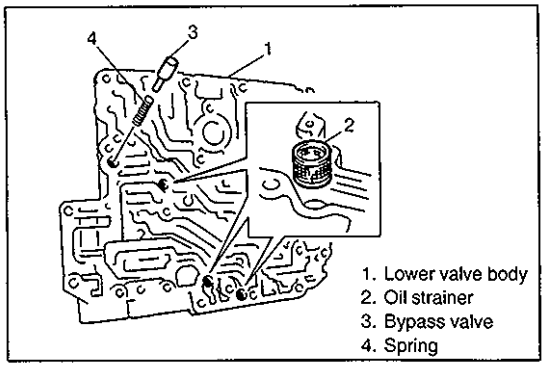

LOWER VALVE BODY

Disassembly

1) Remove oil strainer, bypass valve and spring.

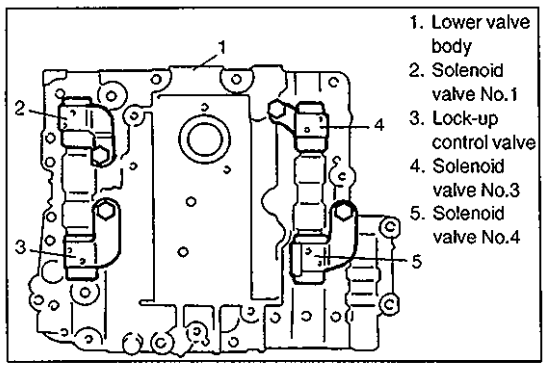

2) Remove solenoid valves.

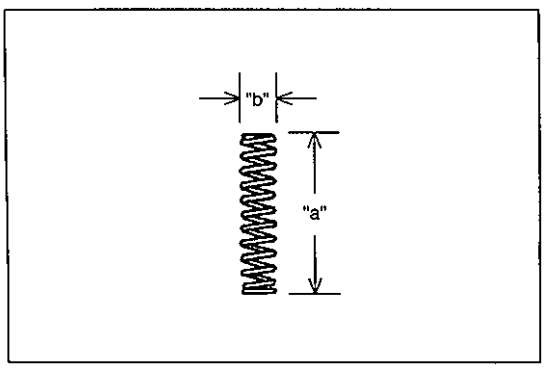

Reference

Cooler Bypass Valve Spring (compression spring)

Free length "a": 22.8 mm (8.98 in.)
Outside diameter "b": 8.0 mm (0.31 in.)

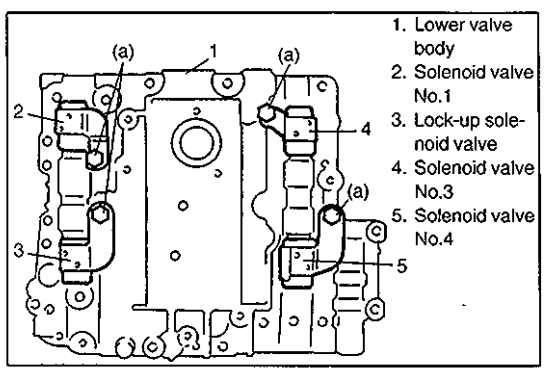

Assembly

1) Install solenoid valves.

Tightening Torque
(a): 8 N·m (0.8 kg-m, 6.0 lb-ft)

NOTE:
Solenoid valve No.1 and No.2 are the same solenoid valve.

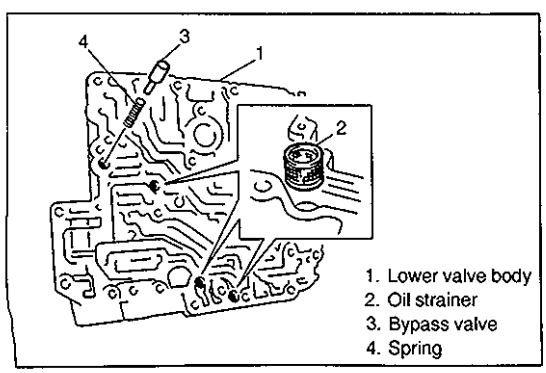

2) Insert oil strainers and bypass valve to lower valve body.

NOTE:
Clean oil strainer before installing.

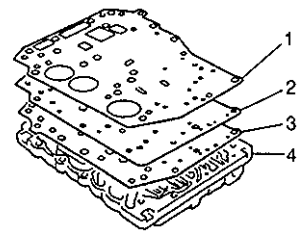

1. Gasket (for lower valve body)
2. Valve body plate
3. Gasket (for upper valve body)
4. Upper valve body

VALVE BODY ASS'Y

Assembly

1) Install gasket for upper valve body, valve body plate and gasket for lower valve body to upper valve body.

NOTE:
Make sure that steel balls and oil strainers are installed at proper location. Refer to "Upper Valve Body Assembly" for steel ball location.

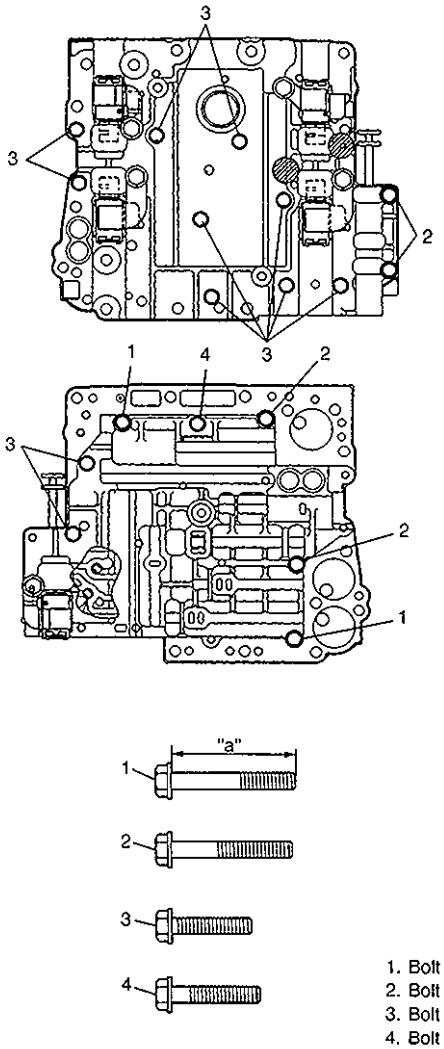

1. Bolt A
2. Bolt B
3. Bolt C
4. Bolt D

2) Assemble upper valve body with gaskets and plate to lower valve body. Make sure that bypass valve is installed to lower valve body before assembly.

Tightening Torque for Valve Body Assembly Bolts (A – D)
5.5 N·m (0.55 kg-m, 4.0 lb-ft)

NOTE:
There are four kinds of bolts fixing upper and lower valve body. Refer to the table below for the bolt specifications.

Bolt	Length "a"	Pieces
A	41.0 mm (1.61 in.)	2
B	38.0 mm (1.50 in.)	4
C	23.0 mm (0.91 in.)	11
D	29.5 mm (1.16 in.)	1

3) Install manual valve to valve body ass'y.

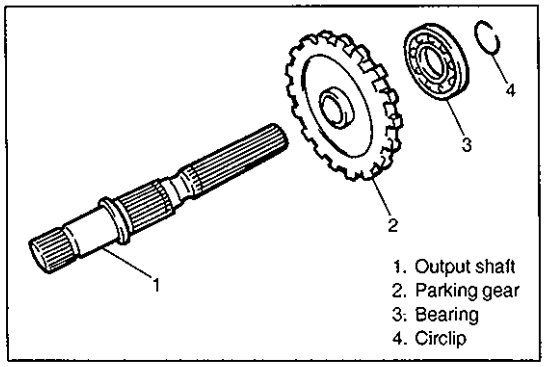

OUTPUT SHAFT ASSEMBLY

DISASSEMBLY

1) Remove circlip and pull out output shaft from parking gear ass'y.

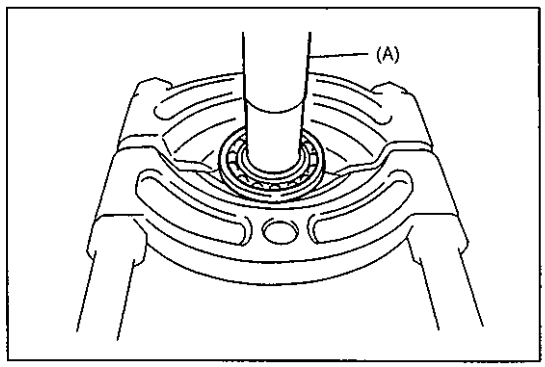

2) Pull out bearing from parking gear by using puller and press.

Special Tool
(A): 09913-80112

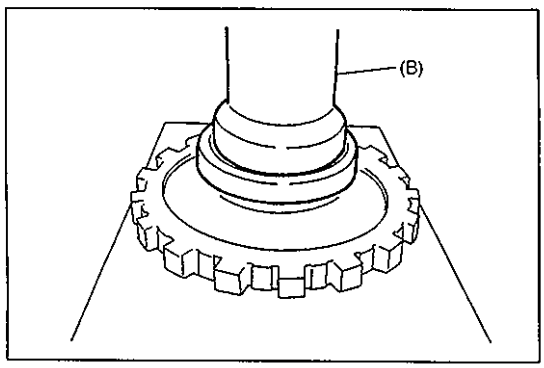

ASSEMBLY

Reverse disassembly procedure noting following point.

- Press-fit bearing by using press and special tool

Special Tool
(B): 09913-76010

UNIT ASSEMBLY

CAUTION:
- **Automatic transmission consists of highly precise parts. As even a flaw in a small part may cause oil leakage or decrease in function, check each part carefully before installation.**
- **Clean all parts with compressed air. Never use wiping cloths or rags.**
- **Before assembling new clutch discs and brake discs, soak them in automatic transmission fluid for at least 2 hours.**
- **Be sure to use new gaskets and O-rings.**
- **Lubricate O-rings with automatic transmission fluid.**
- **Apply automatic transmission fluid on sliding or rotating surfaces of the parts before assembly.**
- **Use yellow petrolatum grease or Suzuki Super Grease C to retain parts in place.**
- **Be sure to install thrust bearings and races in correct direction and position.**
- **Make sure that snap ring ends are not aligned with one of cutouts and are installed in groove correctly.**
- **Do not use adhesive cements on gaskets and similar parts.**
- **Be sure to torque each bolt and nut to specification.**

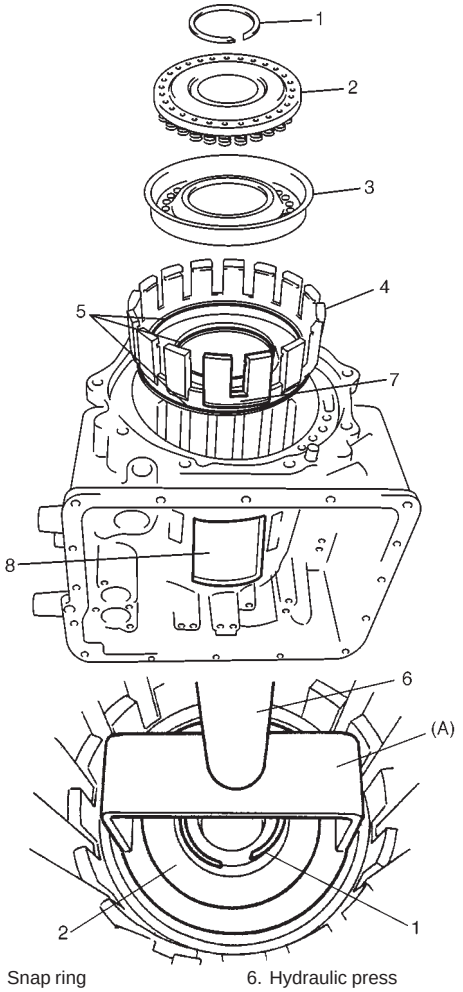

1. Snap ring
2. B1 & B2 return spring ass'y
3. B1 brake piston
4. B2 brake piston
5. O-ring
6. Hydraulic press
7. Mounded part of B2 brake piston
8. Hole of transmission case

1) Install new O-rings (inside and outside) to B2 brake piston, and apply grease to them.

   Grease : 99000-25030

2) **[In the case of transmission type-1]**
   Install B2 brake piston to transmission case.

   [In the case of transmission type-2]
   Install B2 brake piston with two fingers, which have mounded part between them, aligned with transmission case hole as shown in figure.

   NOTE:
   Identify transmission type by VIN listed on the first page of this section.

3) Install B1 brake piston and B1 & B2 return spring assembly to transmission case.
4) Install snap ring by compressing return spring ass'y thru B2 brake piston seat with hydraulic press and special tool.

   NOTE:
   Don't compress B1 & B2 return spring ass'y more than necessary or it may get damaged.

   Special Tool
   (A): 09926-96010

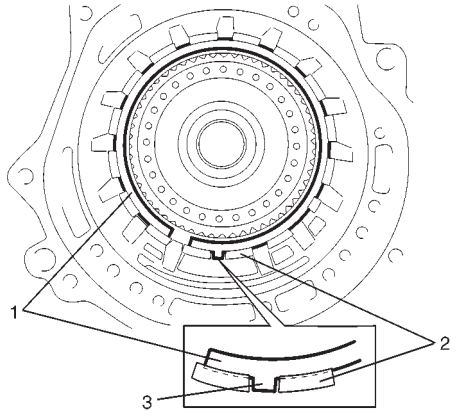

1. Snap ring
2. B2 brake piston
3. Antirotation protrusion

5) Install B1 brake discs, plates and flange to B2 brake piston in following order.
① Plate → ② Disc → ③ Plate → ④ Disc → ⑤ Plate → ⑥ Disc → ⑦ Plate → ⑧ Disc → ⑨ Plate → ⑩ Disc → ⑪ Flange
6) **[In the case of transmission type-1]**
Install snap ring to B2 brake piston.

[In the case of transmission type-2]
Install snap ring to B2 brake piston with antirotation protrusion aligned with gap between two fingers having mounded part.

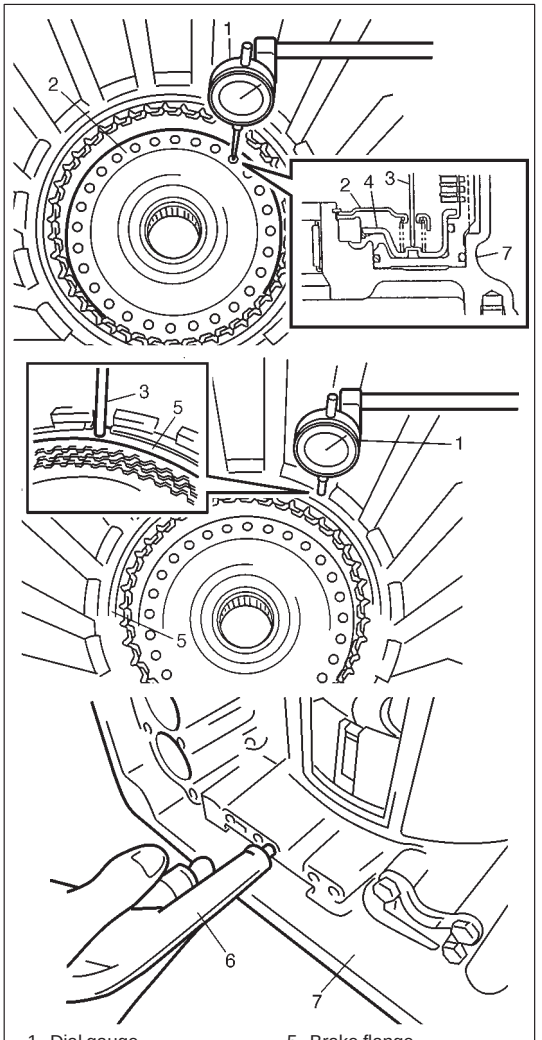

1. Dial gauge
2. B1 brake spring seat
3. Tip of dial gauge
4. B1 brake piston
5. Brake flange
6. Air gun
7. Transmission case

7) Measure B1 brake stroke and clearance in following manner.

B1 Brake Stroke:
Set the dial gauge to 1st & 2nd brake (B1 brake) piston through B1 brake spring seat hole as shown. Blow compressed air into hole shown in figure. Then measure the difference as the compressed air is blown in.

Standard Value for B1 Brake Stroke : 1.75 – 2.00 mm (0.0689 – 0.0787 in.)

B1 Brake Clearance:
Blow compressed air into the hole shown in figure.
Measure the difference.

Standard Value for B1 Brake Clearance: 1.30 – 2.00 mm (0.0512 – 0.0787 in.)

If the measured value(s) is (are) out of specification, select the flange from table below and repeat this step until the measured values are within specification.

Available Flange Size (thickness)	2.875 mm (0.113 in.)
	3.050 mm (0.120 in.)
	3.225 mm (0.127 in.)
	3.400 mm (0.134 in.)
	3.575 mm (0.141 in.)

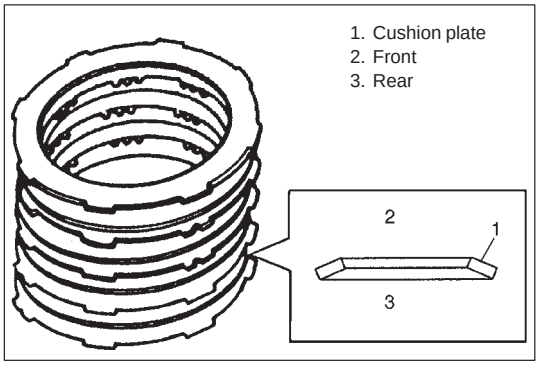

8) Install B2 brake discs, plates and flange in following order.
① Plate → ② Cushion plate → ③ Plate → ④ Disc → ⑤ Plate (thick) → ⑥ Disc → ⑦ Plate (thick) → ⑧ Disc → ⑨ Flange

NOTE:
Cushion plate has installing direction as shown in figure.

9) Hold above parts with snap ring.

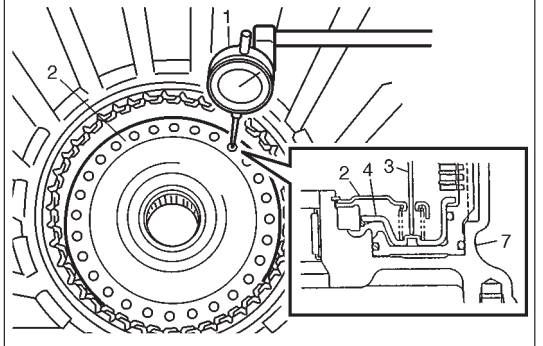

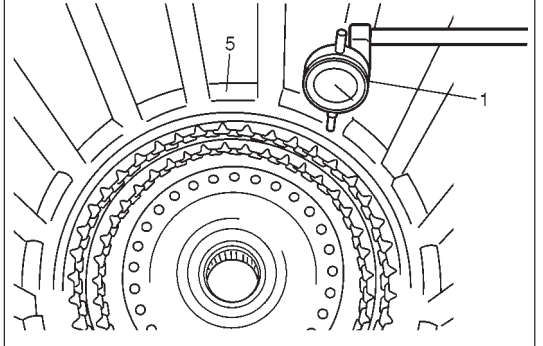

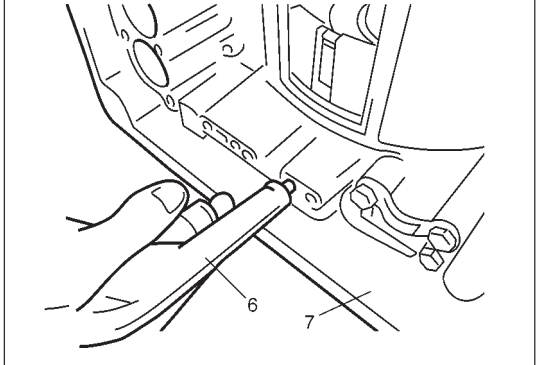

1. Dial gauge
2. B1 brake spring seat
3. Tip of dial gauge
4. B1 brake piston
5. Brake flange
6. Air gun
7. Transmission case

10) Measure B2 brake stroke and clearance in following manner.

B2 Brake Stroke:

Set the dial gauge to reverse brake (B2 brake) piston through B1 brake spring seat hole as shown. Blow compressed air into hole shown in figure. Then measure the difference as the compressed air is blown in.

Standard Value for B2 Brake Stroke : 2.22 – 2.47 mm (0.0874 – 0.0972 in.)

B2 Brake Clearance:
Blow compressed air into the hole shown in figure.
Measure the difference.

Standard Value for B2 Brake Clearance: 0.60 – 1.70 mm (0.0236 – 0.0669 in.)

If the measured value(s) is (are) out of specification, select the flange from table below and repeat this step until the measured values are within specification.

Available Flange Size (thickness)	2.36 mm (0.093 in.)
	2.54 mm (0.100 in.)
	2.72 mm (0.107 in.)
	2.90 mm (0.114 in.)

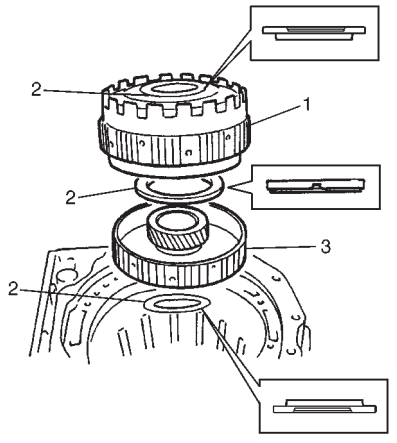

1. Planetary set
2. Thrust needle roller bearing
3. Rear sun gear

11) Install thrust needle roller bearing and rear sun gear. Turn rear sun gear right and left to match the brake discs and the spline of rear sun gear.
12) Install thrust needle roller bearing and planetary set. Turn planetary set right and left to match the gears of the rear sun gear and the gears of the planetary set.

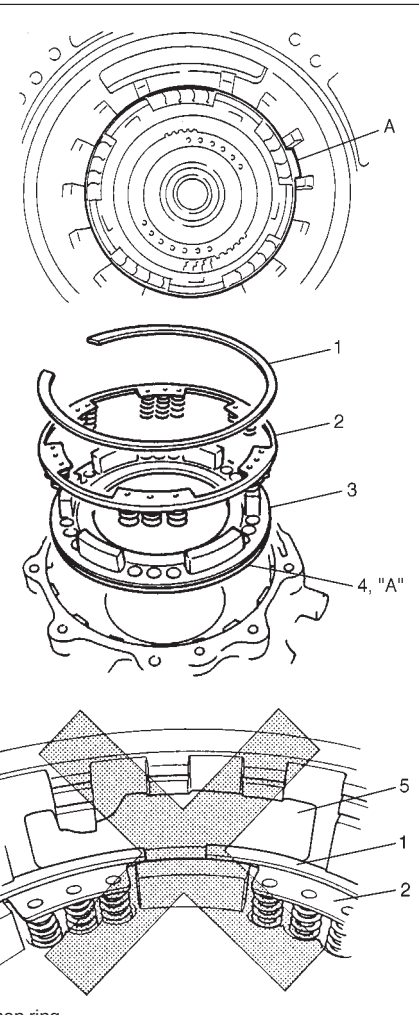

1. Snap ring
2. B0 brake piston return spring subass'y
3. B0 brake piston
4. O-ring (outer)
5. Cored-hole

13) Install new inner and outer O-rings to B0 brake piston and apply grease to them.

"A": Grease 99000-25030

Install brake piston to B0 brake drum.
14) Install B0 brake piston & drum ass'y to transmission case, in such way that the edge A comes at the position as shown in figure. Make sure that the O-rings are not twisted or caught.
15) Place B0 brake piston return spring subass'y on piston. Make sure that each spring fits the holes on the piston.
16) Push down return spring subass'y and install snap ring.

CAUTION:
Check that the opening of snap ring does not face the cored-hole of the transmission case.

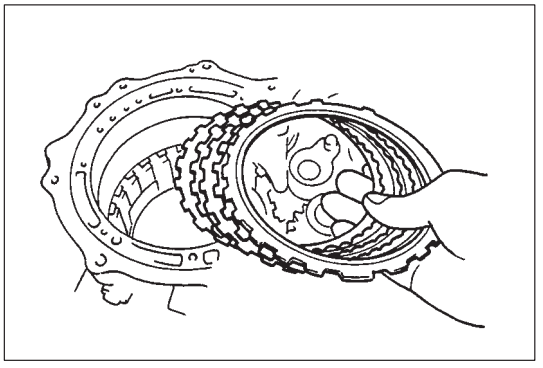

17) Install B0 brake discs, plates and flange in following order.
① Plate → ② Disc → ③ Plate → ④ Disc → ⑤ Flange

NOTE:
The flat surface of B0 flange must face to B0 disc.

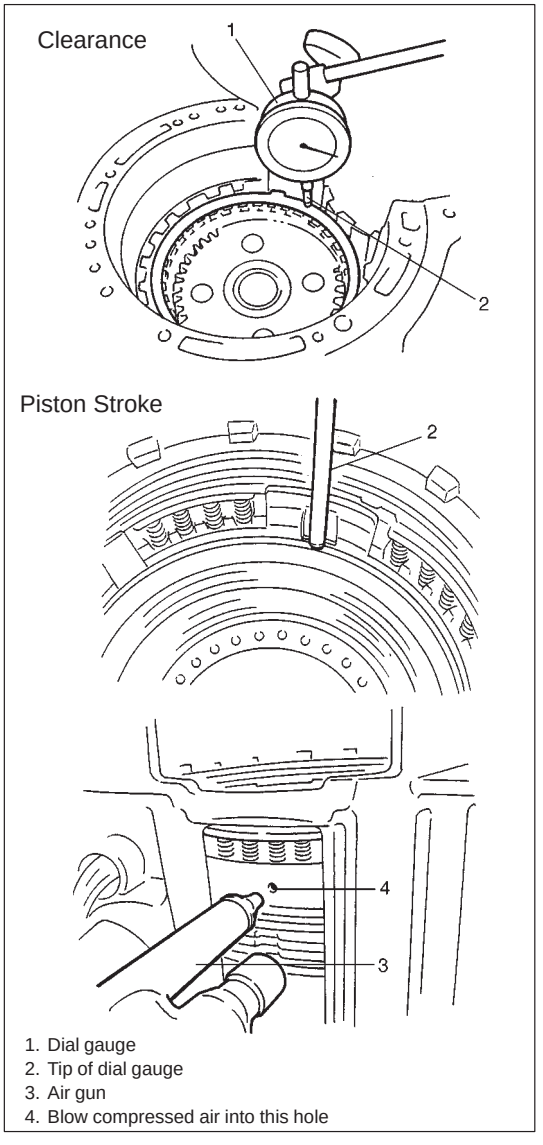

1. Dial gauge
2. Tip of dial gauge
3. Air gun
4. Blow compressed air into this hole

18) Inspect B0 brake piston stroke and clearance by blowing compressed air into hole shown in figure.
Make sure that the obtained piston stroke and clearance satisfy the standard value.

To Measure Clearance:

Set dial gauge to the top of B0 brake flange and blow compressed air into the hole shown in figure.

To Measure Piston Stroke:

Set dial gauge to the step of B0 brake piston as shown in figure. Blow compressed air into the hole shown in figure and measure the value for piston stroke.

Standard Values for
Clearance : 0.50 – 1.05 mm (0.0197 – 0.0413 in.)
Piston stroke : 0.70 – 1.05 mm (0.0275 – 0.0413 in.)

If the measured value(s) is (are) out of specification, select the flange from table below and repeat this step until the measured values are within specification.

Available Flange Size (thickness)	2.35 mm (0.093 in.)
	2.60 mm (0.102 in.)
	2.85 mm (0.112 in.)
	3.10 mm (0.122 in.)

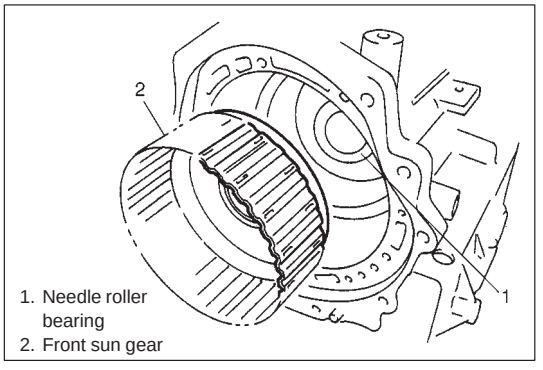

1. Needle roller bearing
2. Front sun gear

19) Install front sun gear to planetary set.

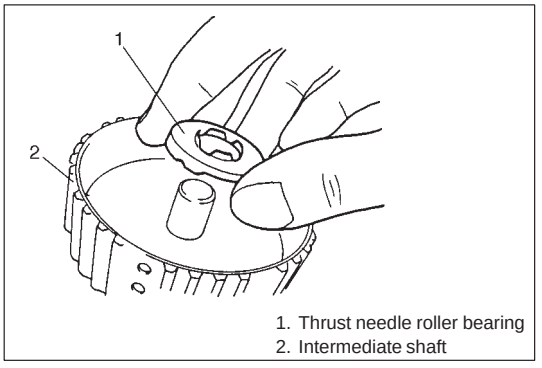

1. Thrust needle roller bearing
2. Intermediate shaft

20) Install thrust needle roller bearing to intermediate shaft.

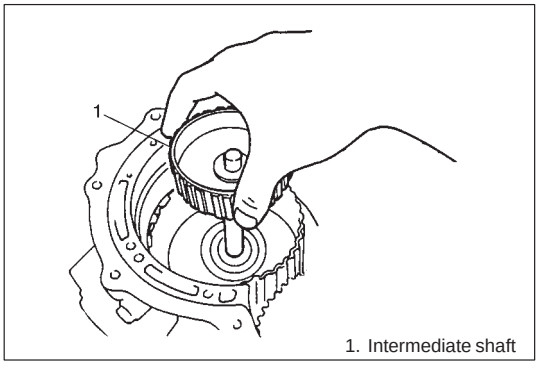

1. Intermediate shaft

21) Install intermediate shaft to transmission case.

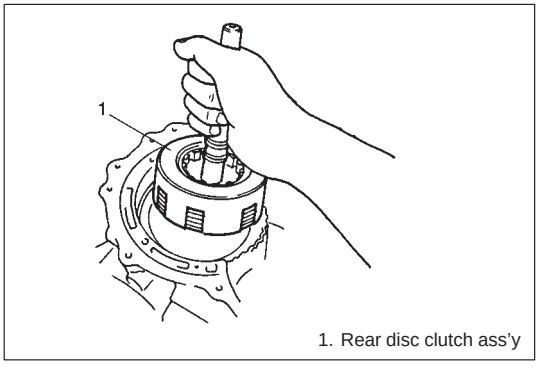

1. Rear disc clutch ass'y

22) Install rear disc clutch assembly by turning it right and left to match the clutch disc of rear disc clutch ass'y and the spline of intermediate shaft.

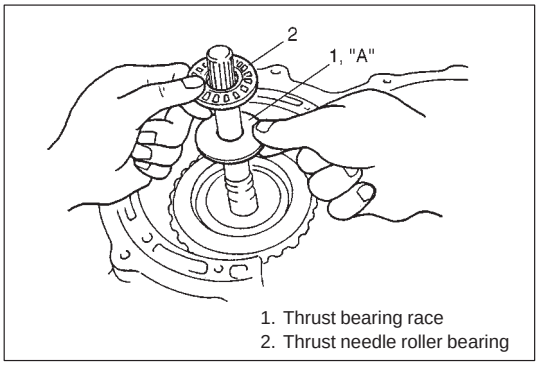

1. Thrust bearing race
2. Thrust needle roller bearing

23) Install thrust bearing race and thrust needle roller bearing.

"A": Grease 99000-25030

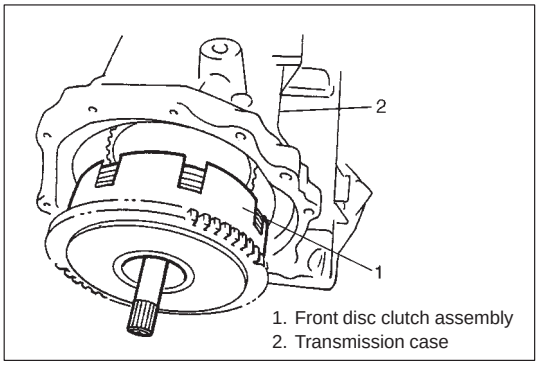

1. Front disc clutch assembly
2. Transmission case

24) Install front disc clutch assembly by turning it right and left to match the clutch disc of front disc clutch ass'y and the spline of follow shaft.

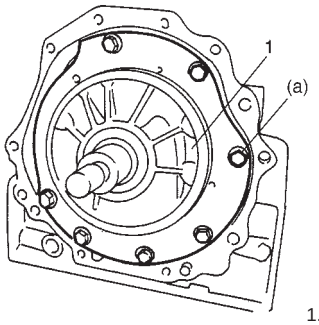

1. Oil pump

25) Install gasket to transmission case and install oil pump assembly to transmission case.

Tightening Torque:
(a): 12 N·m (1.2 kg-m, 8.5 lb-ft)

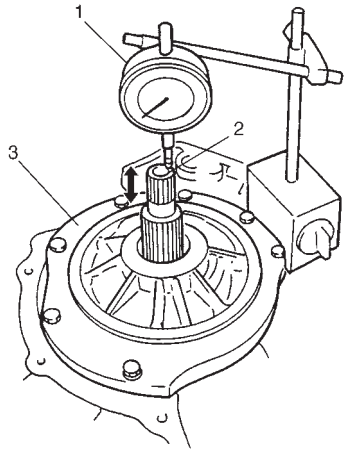

1. Dial gauge
2. Input shaft end
3. Oil pump

26) Measure input shaft end play.
Set dial gauge as shown in figure and measure the play of the input shaft.

Standard Value of Input Shaft End Play: 0.3 – 0.9 mm (0.012 – 0.036 in.)

If the obtained value is out of standard value, select thrust bearing race (installed in step 22) of different thickness shown in table below and adjust the play.

Available Thrust Bearing Race Size (thickness)	1.3 mm (0.051 in.)
	1.7 mm (0.067 in.)
	2.1 mm (0.083 in.)

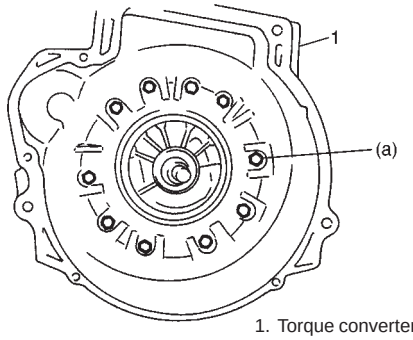

1. Torque converter housing

27) Apply grease to oil pump D-ring.
Install new gasket to transmission case and install torque converter housing.

Tightening Torque:
(a): 19 N·m (1.9 kg-m, 14.0 lb-ft)

Grease: 99000-25030

NOTE:
Use new bolts.

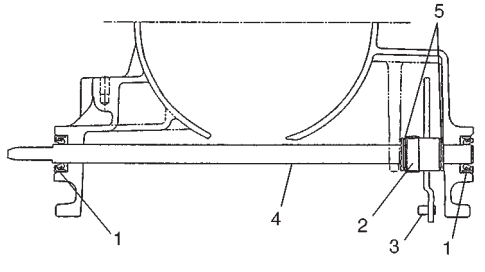

1. Oil seal
2. Sleeve cover
3. Manual shift lever
4. Manual shift shaft
5. Washer

28) Apply grease to lip of new oil seal and drive in oil seal till it contacts with transmission case.
29) After installing new sleeve cover and washers to manual shift lever, install manual shift shaft and manual shift lever to transmission case.

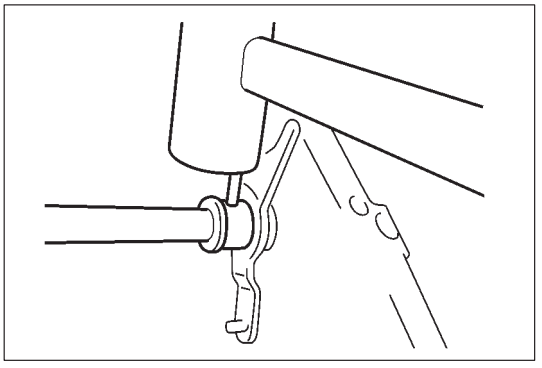

30) Align hole in manual shift shaft with that in manual shift lever and drive in new manual shift lever pin through sleeve cover.

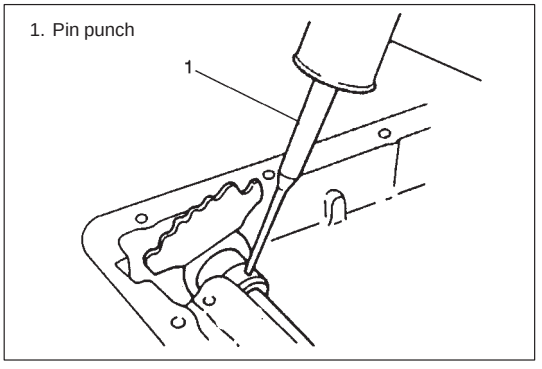

31) Turn sleeve cover by 90° and caulk securely with pin punch. Then check that manual shift shaft turns smoothly.

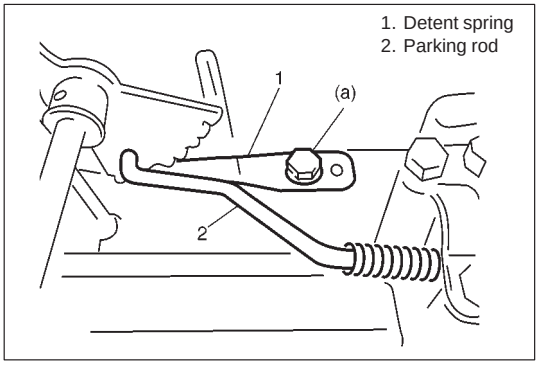

32) Install detent spring and parking rod as shown in figure.

Tightening Torque
(a): 15N·m (1.5 kg-m, 11.0 lb-ft)

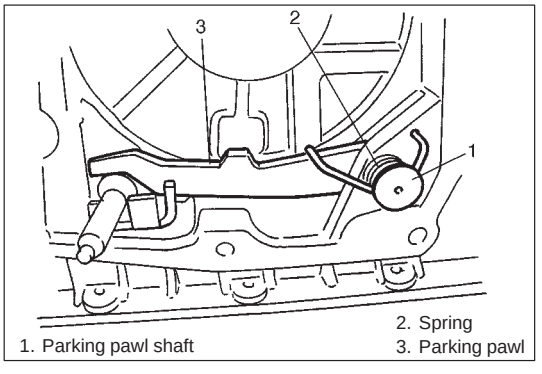

33) Install parking pawl, spring and parking pawl shaft as shown in figure.

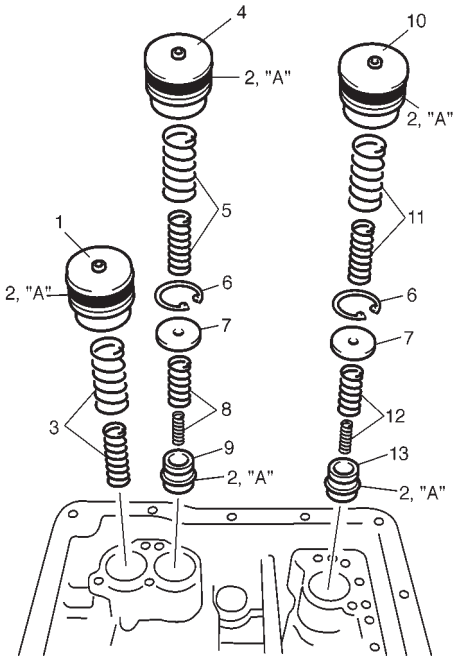

1. C2 accumulator piston (large)
2. O-ring
3. C2 accumulator spring (with pink paint)
4. B1 accumulator piston (with 1 groove)
5. B1 accumulator spring (with light blue paint)
6. Snap ring
7. Accumulator spacer
8. B0 accumulator spring (with white paint)
9. B0 accumulator piston
10. C1 accumulator piston (with 2 grooves)
11. C1 accumulator spring
12. C2 accumulator spring (with orange paint)
13. C2 accumulator piston (small)

34) Install O-rings to each accumulator piston and apply grease or ATF to them.

"A": Grease 99000-25030

35) Install B0 accumulator piston, compression spring gray paint and accumulator spacer.
Hold them with snap ring.

NOTE:
- **Make sure that the snap ring is fitted to the groove of B1-B0 accumulator cylinder.**
- **Make sure that the O-ring is not twisted or caught when installing.**

36) Install B1 accumulator spring (with light blue paint) and accumulator piston.

NOTE:
- **Make sure that the O-ring is not twisted or caught when installing.**

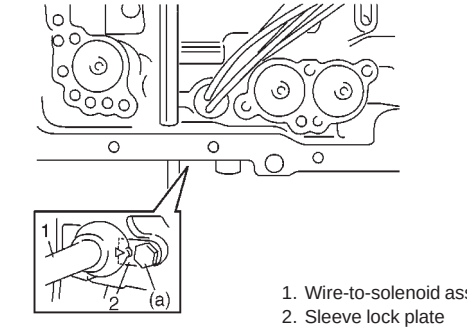

1. Wire-to-solenoid ass'y
2. Sleeve lock plate

37) Install wire-to-solenoid assembly.
Fix it with sleeve lock plate and a bolt.

NOTE:
- **Apply grease to O-ring of wire-to-solenoid ass'y.**
- **Match the arrow mark on wire-to-solenoid ass'y with the sleeve lock plate.**

Tightening Torque:
(a): 8.0 N·m (0.8 kg-m, 6.0 lb-ft)
Grease 99000-25030

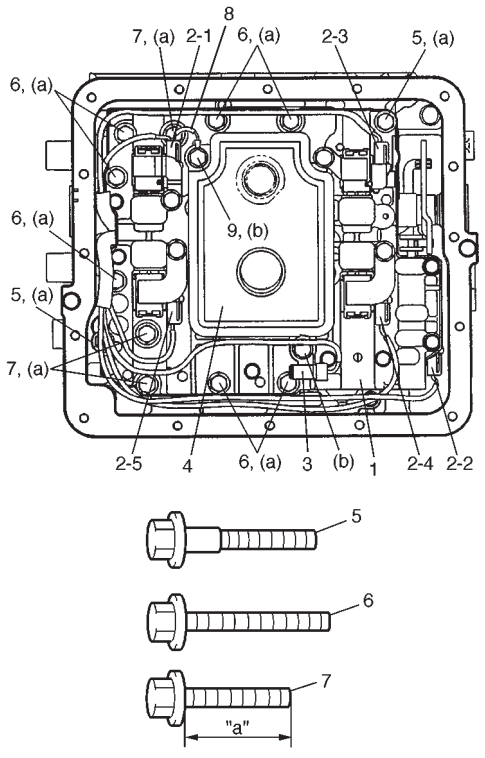

1. Valve body ass'y
2–1. Shift solenoid No.1 coupler
2–2. Shift solenoid No.2 coupler
2–3. Shift solenoid No.3 coupler
2–4. Shift solenoid No.4 coupler
2–5. Lock-up solenoid coupler
3. A/T fluid temp. sensor
4. Oil strainer ass'y
5. Bolt A
6. Bolt B
7. Bolt C
8. Ground wire
9. Oil strainer bolt

38) Install valve body to transmission case.
First match the pin of the manual valve lever to the slot of the manual valve.

NOTE:
Connect shift solenoid No.2 coupler (green) before tightening bolts.
Tightening Torque:
(a): 10 N·m (1.0 kg-m, 7.5 lb-ft)

Bolt	Length "a"	Pieces
A	25 mm (0.98 in.)	2
B	25 mm (0.98 in.)	7
C	20 mm (0.79 in.)	3

39) Connect couplers of wire-to-solenoid to solenoid valves.

Solenoid Valve	Color
1	Natural
2	Green
3	Natural
4	Black
Lock-up	Black

40) Install O-ring to oil strainer ass'y.
41) Install oil strainer ass'y with ground wire for shift solenoid valve No.1 to the top of valve body ass'y.
Connect A/T fluid temperature sensor coupler.
Fix A/T fluid temperature sensor and oil strainer ass'y with bolts.

Tightening Torque:
(b): 8 N·m (0.8 kg-m, 6 lb-ft)

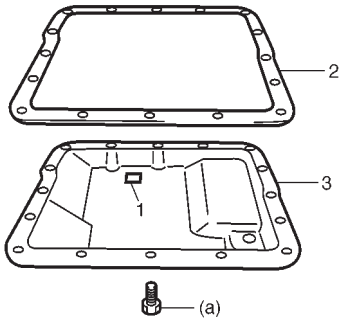

1. Magnet
2. Gasket
3. Oil pan

42) Install magnet in oil pan.

NOTE:
If metal particles are attached to the magnet, clean them before installing.

43) Install gasket to transmission case and install oil pan.

Tightening Torque:
(a): 7.5 N·m (0.75 kg-m, 5.5 lb-ft)

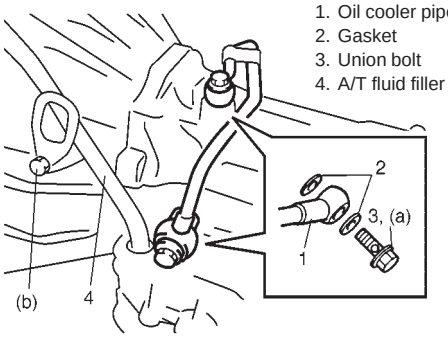

1. Oil cooler pipe
2. Gasket
3. Union bolt
4. A/T fluid filler tube

44) Install oil cooler pipe with new gaskets.

Tightening Torque:
(a):36 N·m (3.6 kg-m, 26.0 lb-ft)
(b):19 N·m (1.9 kg-m, 13.5 lb-ft)
Oil cooler pipe bracket bolt: 6 N·m (0.6 kg-m, 4.5 lb-ft)

45) Install A/T fluid filler tube and level gauge.

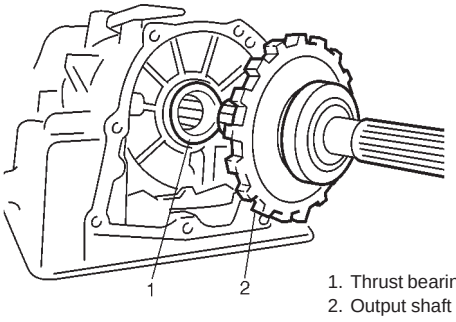

1. Thrust bearing
2. Output shaft ass'y

46) Apply grease to thrust bearing and install it to transmission case.
47) Install output shaft to transmission case.

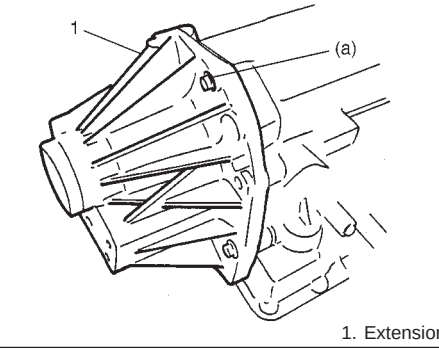

1. Extension case

48) Install extension case.

Tightening Torque
(a): 17 N·m (1.7 kg-m, 12.5 lb-ft)

NOTE:
Use new bolts.

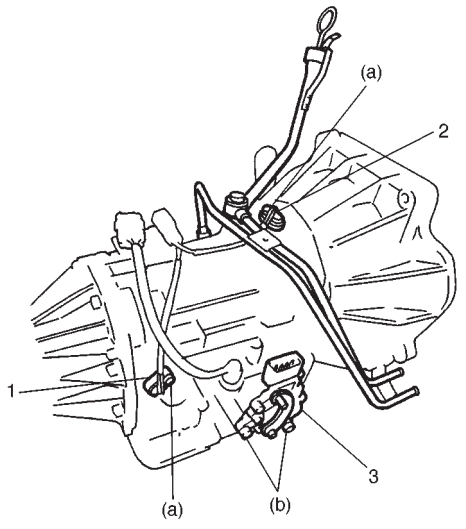

1. A/T VSS
2. Turbine rev. sensor
3. Shift switch

49) Install A/T VSS and turbine revolution sensor.
Apply grease to O-ring of each sensor.

Tightening Torque:
(a): 8 N·m (0.8 kg-m, 6.0 lb-ft)

50) Install shift switch.
Install it temporarily so that the adjustment can be done after installing A/T ass'y back to the vehicle.

Tightening Torque:
(b): 18 N·m (1.8 kg-m, 13.0 lb-ft)

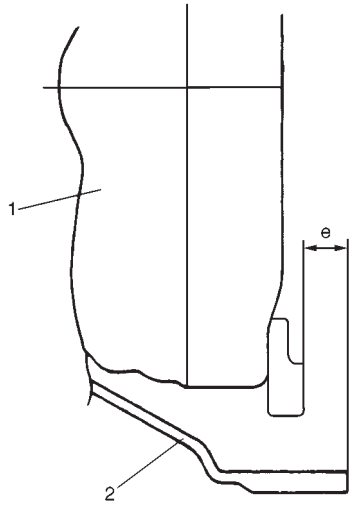

1. Torque converter
2. Torque converter housing

51) Install torque converter to input shaft.
- Install torque converter, using care not to damage oil seal of oil pump.
- After installing torque converter, check to make sure that distance “e” is within specification.

  Distance “e”: More than 18.0 mm (0.708 in.)
- Check torque converter for smooth rotation.
- Apply grease around cup at the center of torque converter.

  SUZUKI SUPER GREASE A, 99000-25010

CAUTION:
- **Before installing converter, make sure that its pump hub portion is free from nicks, burrs or damage which may cause oil seal to leak.**
- **Be very careful not to drop converter on oil pump gear. Damage in gear, should it occur, may cause a critical trouble.**

TIGHTENING TORQUE SPECIFICATIONS

	Fastening portion	Tightening torque		
		N·m	kg-m	lb-ft
ON-VEHICLE SERVICE	Drain plug	22.0	2.2	16.0
	Shift switch bolt	18.0	1.8	13.0
	A/T VSS bolt	8.0	0.8	6.0
	Turbine rev. sensor bolt	8.0	0.8	6.0
	Selector rod nut	7.0	0.7	5.0
	Connector clamp bracket bolt	8.0	0.8	6.0
	A/T oil pan bolt	7.5	0.75	5.5
	A/T fluid temp. sensor bolt	8.0	0.8	6.0
	Oil strainer bolt	8.0	0.8	6.0
	Selector lever ass'y bolt	18.0	1.8	13.0
	Shift control shaft nut	13.0	1.3	9.5
E SERVICE	Solenoid valve bolt	8.0	0.8	6.0
	Interlock cable screw	2.2	0.22	1.6
	Interlock cable bracket nut	13.0	1.3	9.5
MOUNTING	Transmission rear mounting blot	25.0	2.5	18.0
	Rear mounting bracket bolts			
	Frame to rear mounting bolts			
	Transmission mounting ass'y bolt and nut	50.0	5.0	36.5
TRANSMISSION	Detent spring ass'y bolts	15.0	1.5	11.0
	Oil pump ass'y – transmission case fastening bolts	12.0	1.2	8.5
	Torque converter housing bolts	19.0	1.9	14.0
	Wire-to-solenoid bolt	8.0	0.8	6.0
	Upper valve body – lower valve body fastening bolts	5.5	0.55	4.0
	Valve body ass'y – transmission case fastening bolts	10.0	1.0	7.5
	Oil cooler pipe union bolts	36.0	3.6	26.0
	Oil cooler pipe ass'y – transmission case fastening bolt	6.0	0.6	4.5
	Extension case bolt	17.0	1.7	12.5

SPECIAL TOOLS

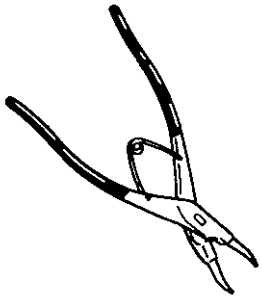

09900-06108
Snap ring plier
(Closing type)

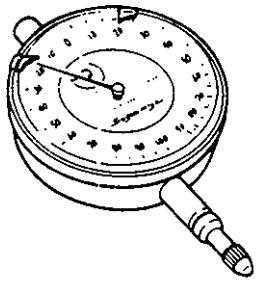

09900-20606
Dial gauge

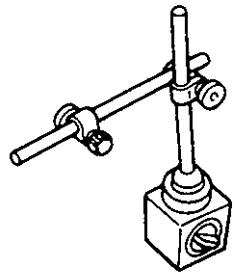

09900-20701
Magnetic stand

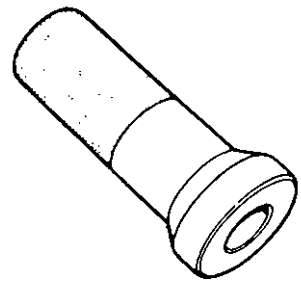

09913-76010
Bearing installer

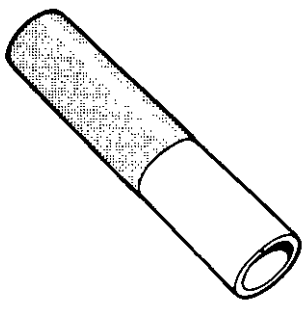

09913-80112
Bearing installer

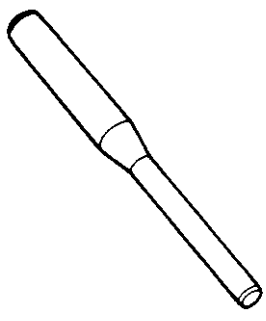

09925-78210
Spring pin remover (6 mm)

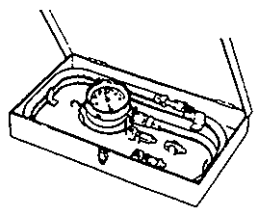

09925-37810
Oil pressure gauge

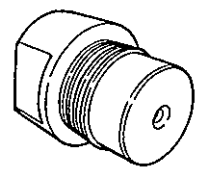

09926-26030
Clutch clearance
checking base No.1

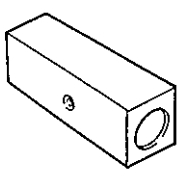

09926-26040
Clutch clearance
checking base No.2

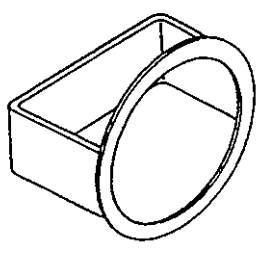

09926-96010
Clutch spring compressor

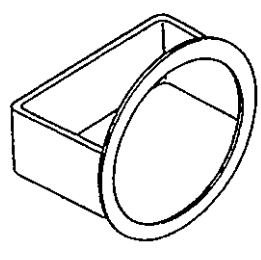

09926-96020
Clutch spring compressor

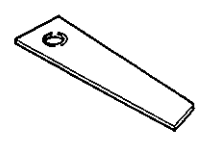

09952-06010
Dial gauge plate No.1

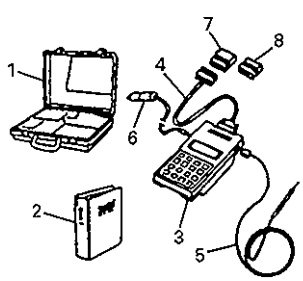

1. Storage case
2. Operator's manual
3. Tech 1A
4. DLC cable
5. Test lead/probe
6. Power source cable
7. DLC cable adaptor
8. Self-test adaptor

09931-76011
Tech 1A kit

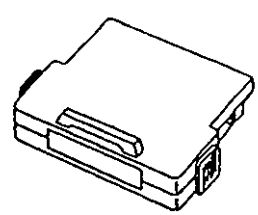

Mass storage cartridge

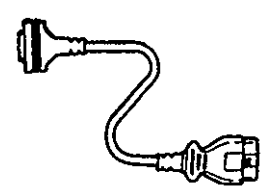

09931-76030
16/14 pin DLC cable

REQUIRED SERVICE MATERIALS

MATERIALS	RECOMMENDED SUZUKI PRODUCT	USE
Automatic transmission fluid	An equivalent of DEXRON®-IIE or DEXRON®-III	• Automatic transmission • Parts lubrication when installing
Lithium grease	SUZUKI SUPER GREASE C (99000-25030)	• Retaining parts in place when assembling • Oil seal lips • Oil pump D-ring
	SUZUKI SUPER GREASE A (99000-25010)	• Rod ends • Converter center cup

SECTION 7C

CLUTCH

CONTENTS

GENERAL DESCRIPTION 7C- 2
DIAGNOSIS 7C- 3
ON-VEHICLE SERVICE 7C- 4
Maintenance Service 7C- 4
Clutch Cable 7C- 6
UNIT REPAIR OVERHAUL 7C- 7
Clutch Cover, Clutch Disc, Flywheel And Release Bearing 7C- 7
TIGHTENING TORQUE SPECIFICATIONS 7C-12
REQUIRED SERVICE MATERIALS 7C-12
SPECIAL TOOLS 7C-12

GENERAL DESCRIPTION

The clutch is a diaphragm-spring clutch of a dry single disc type. The diaphragm spring is of a taperingfinger type, which is a solid ring in the outer diameter part, with a series of tapering fingers pointing inward. The disc, carrying three torsional coil springs, is slidably mounted on the transmission input shaft with a serration fit.

The clutch cover is secured to the flywheel, and carries the diaphragm spring in such a way that the peripheral edge of the spring pushes on the pressure plate against the flywheel (with the disc in between), when the clutch release bearing is held back: This is the engaged condition of the clutch.

Depressing the clutch pedal causes the release bearing to advance and push on the tips of the tapering fingers of the diaphragm spring. When this happens, the diaphragm spring pulls the pressure plate away from the flywheel, thereby interrupting the flow of drive from flywheel through clutch disc to transmission input shaft.

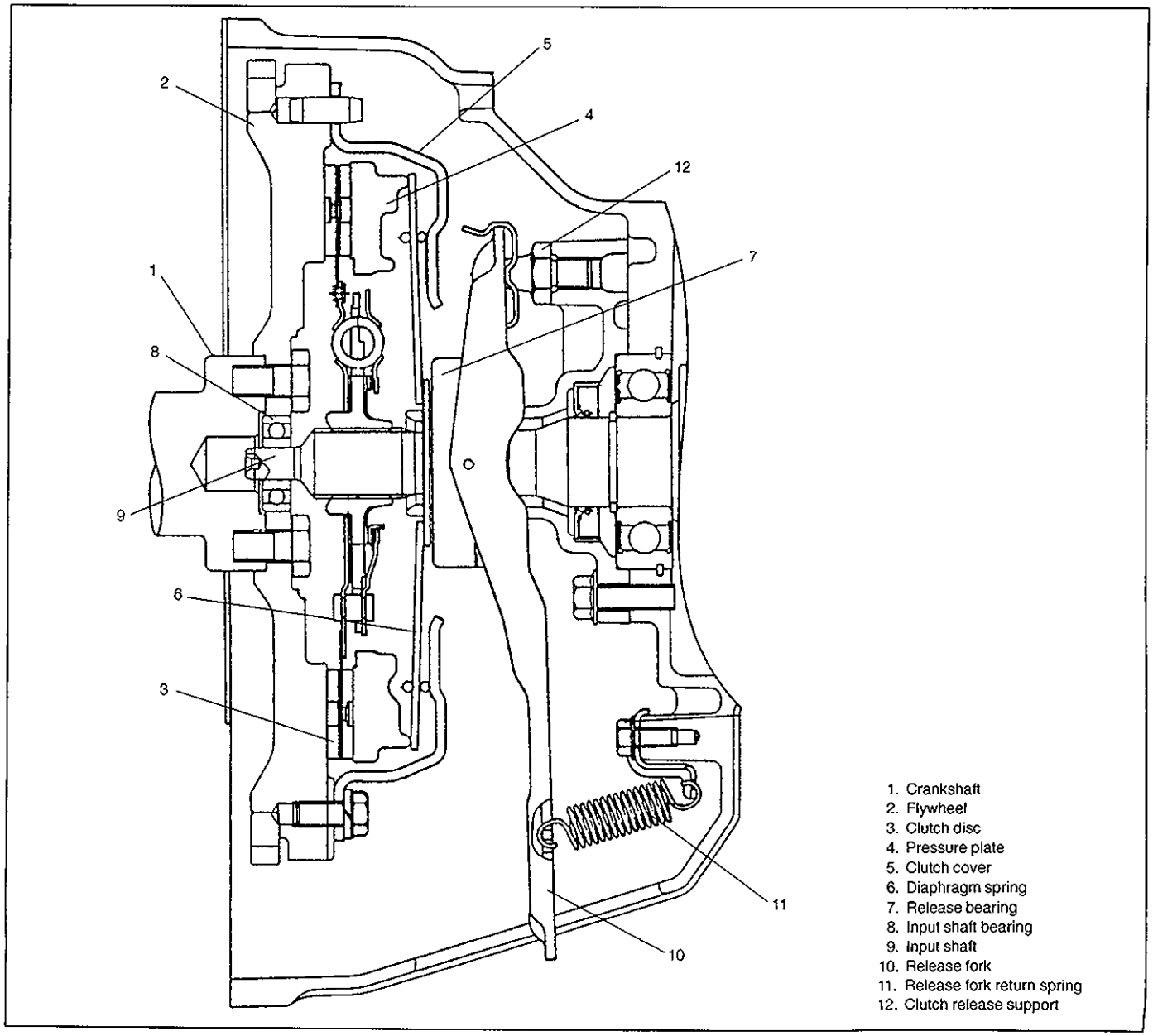

1. Crankshaft
2. Flywheel
3. Clutch disc
4. Pressure plate
5. Clutch cover
6. Diaphragm spring
7. Release bearing
8. Input shaft bearing
9. Input shaft
10. Release fork
11. Release fork return spring
12. Clutch release support

DIAGNOSIS

Condition	Possible Cause	Correction
Slipping clutch	• Loss of clearance at the tip of release fork	Adjust as prescribed
	• Clutch facings dirty with oil	Replace
	• Clutch facings excessively worn	Replace
	• Weakened diaphragm spring	Replace
	• Distorted pressure plate or flywheel surface	Replace
	• Improper clutch pedal free travel	Adjust and, as necessary, replace clutch facings
Dragging clutch	• Improper clutch pedal free travel	Adjust free travel
	• Weakened diaphragm spring, or worn spring tip	Replace
	• Damaged or worn splines of transmission input shaft	Replace
	• Front input shaft bearing worn or broken	Replace
	• Excessively wobbly clutch disc	Replace
	• Clutch facings broken or dirty with oil	Replace
Clutch vibration	• Glazed (glass–like) clutch facings	Repair or replace
	• Clutch facings dirty with oil	Replace
	• Wobbly clutch disc, or poor facing contact	Replace
	• Weakened torsion springs (in clutch disc)	Replace
	• Clutch disc rivets loose	Replace the disc
	• Distorted pressure plate or flywheel surface	Replace
	• Weakened engine mounting or loosened mounting bolt or nut	Retighten or replace
Noisy clutch	• Worn or broken release bearing	Replace
	• Front input shaft bearing worn down	Replace
	• Excessive rattle of clutch disc hub	Replace the disc
	• Cracked clutch disc	Replace
	• Pressure plate and diaphragm spring rattling	Replace
Grabbing clutch	• Clutch facings soaked with oil	Replace
	• Excessively worn clutch facings	Replace
	• Rivet heads showing out of the facing	Replace
	• Weakened torsion springs	Replace

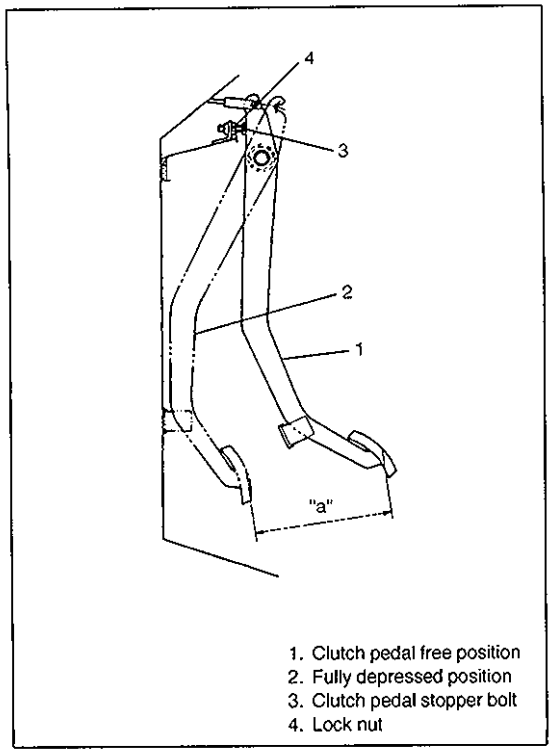

1. Clutch pedal free position
2. Fully depressed position
3. Clutch pedal stopper bolt
4. Lock nut

ON-VEHICLE SERVICE

MAINTENANCE SERVICE

CLUTCH PEDAL HEIGHT

Check to make sure that clutch pedal height is within "a" range as illustrated.

Clutch pedal height "a": 140 mm (5.51 in.)

If clutch pedal height is out of above specification, adjust it by turning pedal stopper bolt.
Be sure to tighten lock nut after adjustment.

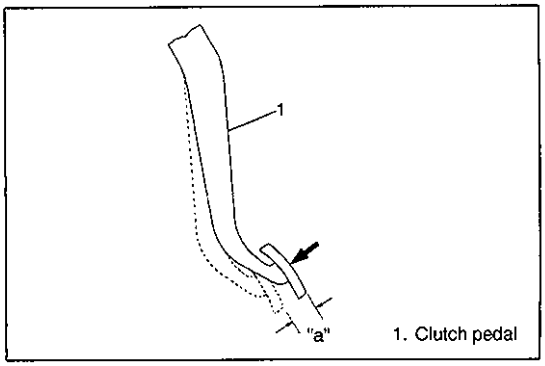

1. Clutch pedal

CLUTCH PEDAL FREE TRAVEL

1) Depress clutch pedal, stop the moment clutch resistance is felt, and measure distance (clutch pedal free travel). Free travel should be within the following specification.

Pedal free travel "a": 10 – 20 mm (0.4 – 0.8 in.)

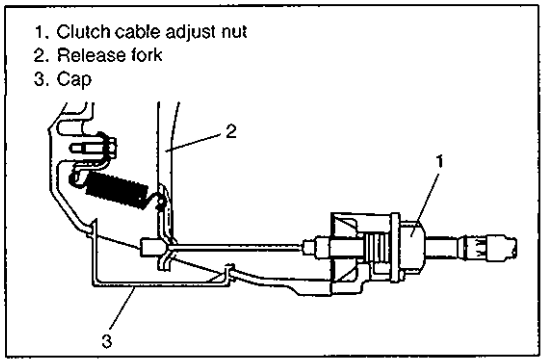

2) If free travel is out of specification, adjust it with clutch cable adjust nut.

Release fork free travel: 2 – 4mm (0.08 – 0.16 in.)

CLUTCH CABLE ROUTING

1) For left-hand side steering vehicle.

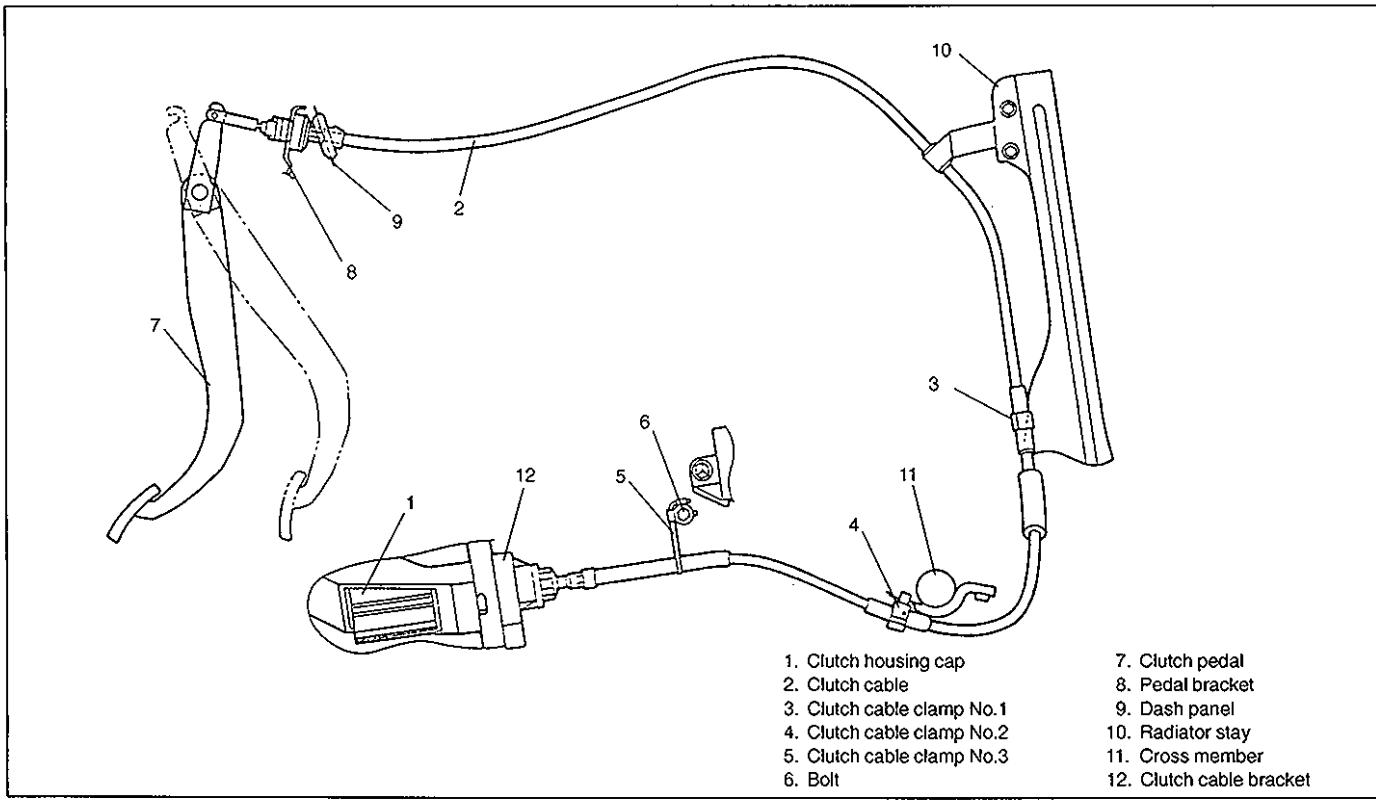

1. Clutch housing cap
2. Clutch cable
3. Clutch cable clamp No.1
4. Clutch cable clamp No.2
5. Clutch cable clamp No.3
6. Bolt
7. Clutch pedal
8. Pedal bracket
9. Dash panel
10. Radiator stay
11. Cross member
12. Clutch cable bracket

2) For right-hand side steering vehicle.

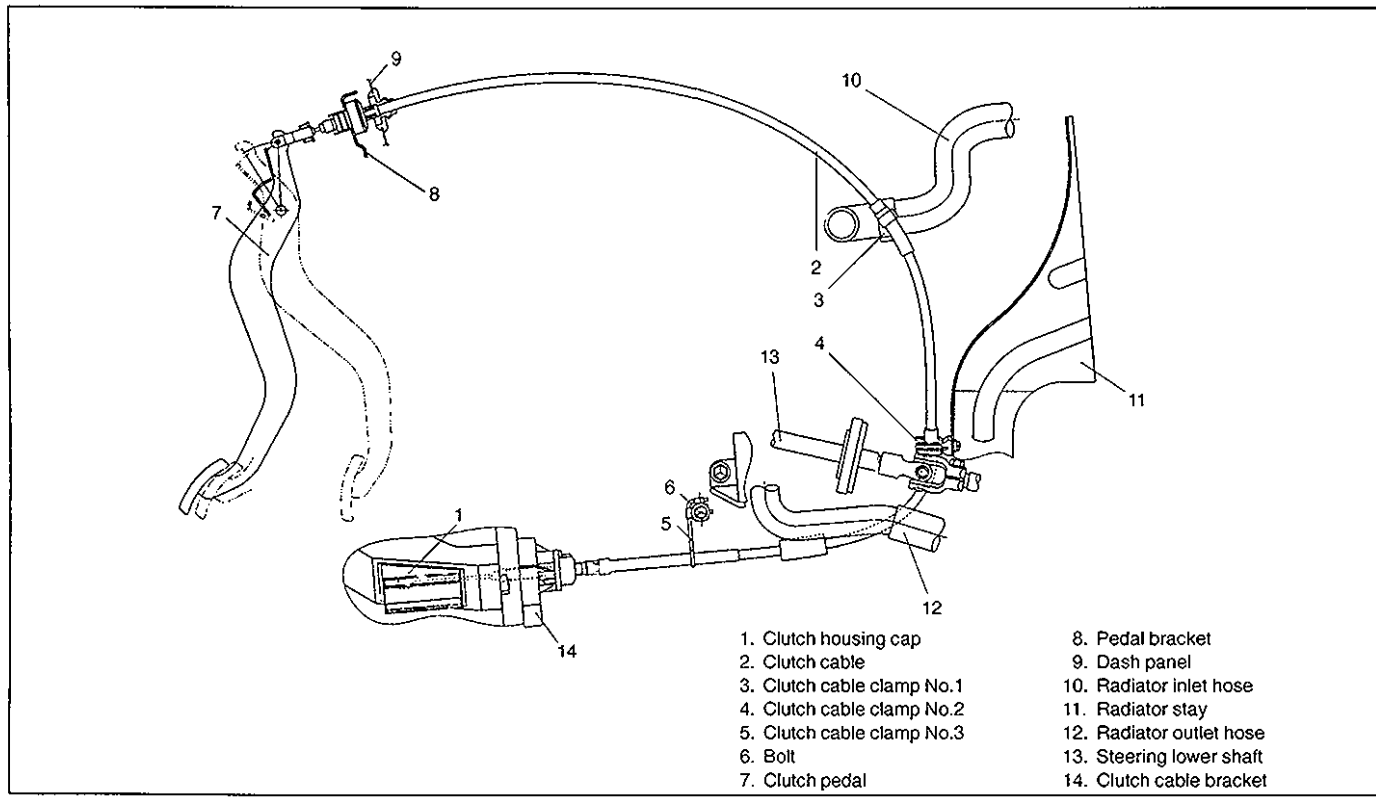

1. Clutch housing cap
2. Clutch cable
3. Clutch cable clamp No.1
4. Clutch cable clamp No.2
5. Clutch cable clamp No.3
6. Bolt
7. Clutch pedal
8. Pedal bracket
9. Dash panel
10. Radiator inlet hose
11. Radiator stay
12. Radiator outlet hose
13. Steering lower shaft
14. Clutch cable bracket

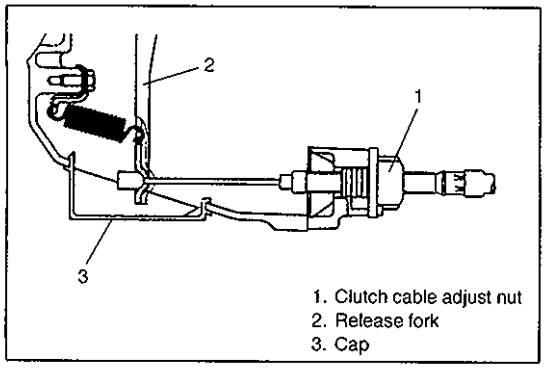

1. Clutch cable adjust nut
2. Release fork
3. Cap

CLUTCH CABLE

REMOVAL

1) Remove clutch housing cap.
2) Loosen clutch cable adjust nut and disconnect clutch cable from release fork.

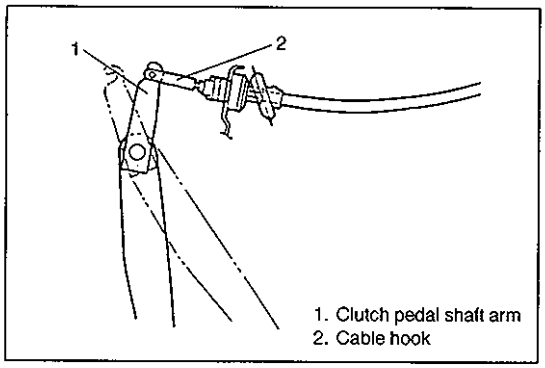

1. Clutch pedal shaft arm
2. Cable hook

3) Disconnect cable hook at clutch pedal shaft arm, then take off cable.

INSPECTION

Inspect clutch cable and replace it for any of following conditions.

- Excessive cable friction
- Frayed cable
- Bent or kinked cable
- Worn end

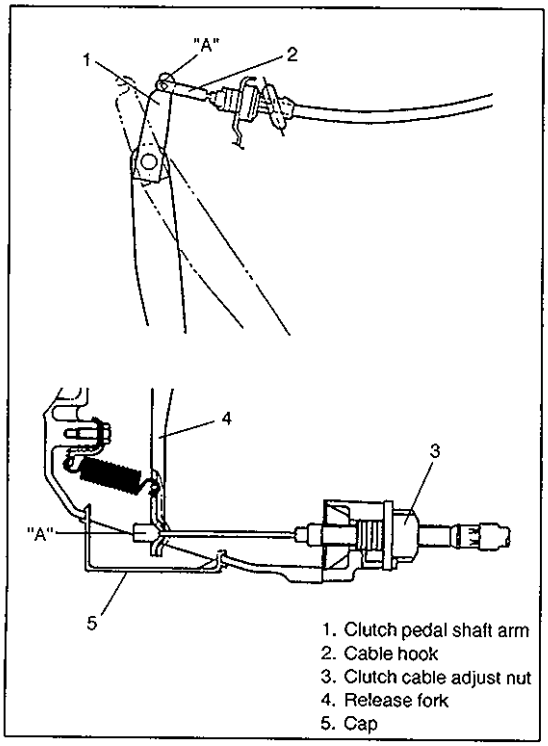

1. Clutch pedal shaft arm
2. Cable hook
3. Clutch cable adjust nut
4. Release fork
5. Cap

INSTALLATION

1) Before installing cable, apply grease to cable end hook and release fork as shown figure.

   "A" : Grease 99000–25010

2) Screw in clutch cable adjust nut and adjust free travel of pedal to specification by turnning nut.
3) Check clutch for proper function with engine running.

UNIT REPAIR OVERHAUL

CLUTCH COVER, CLUTCH DISC, FLYWHEEL AND RELEASE BEARING

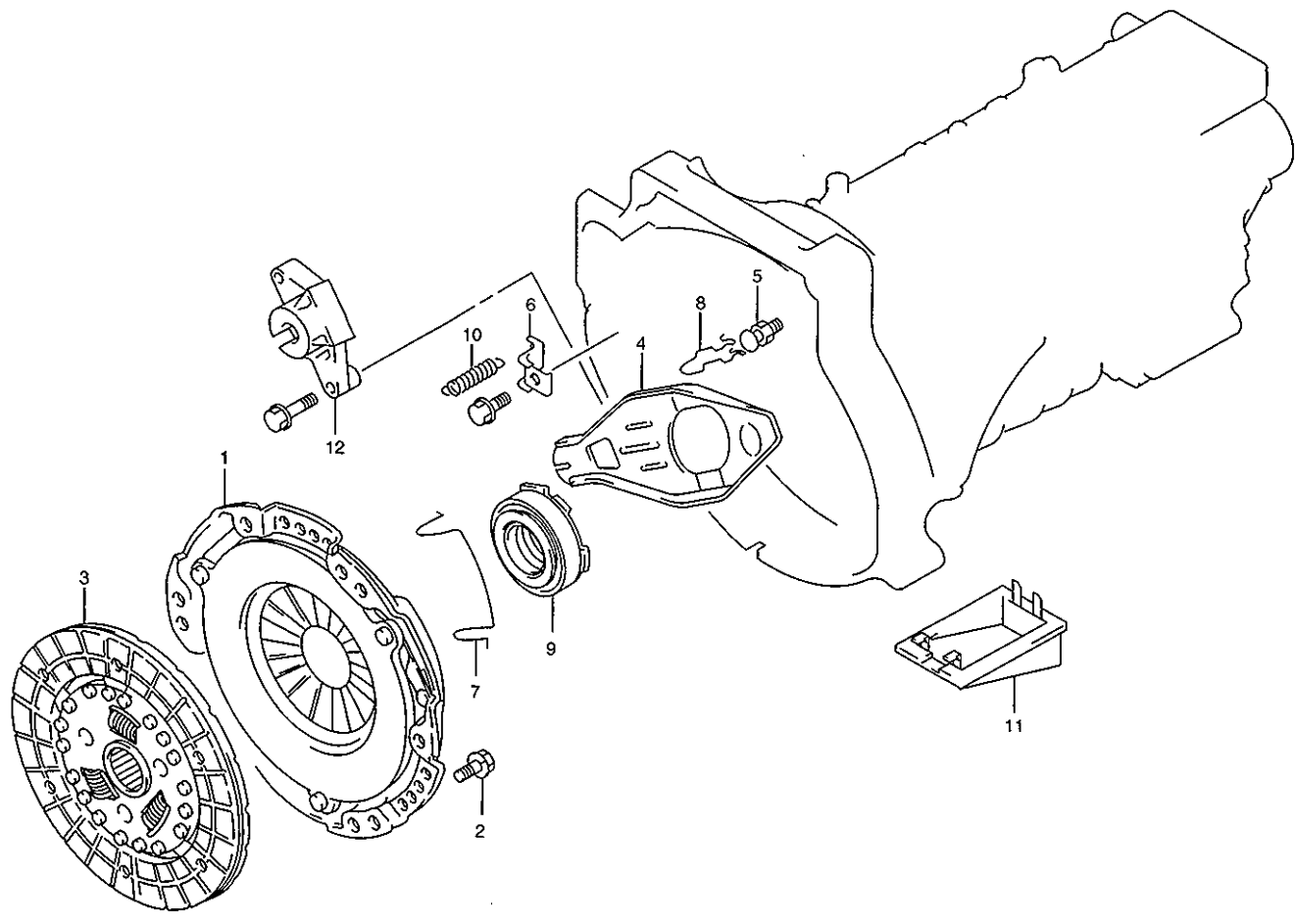

1. Clutch cover
2. Bolt
3. Clutch disc
4. Release fork
5. Clutch release fork support
6. Return spring bracket
7. Release bearing clip
8. Release fork clip
9. Release bearing
10. Release fork return spring
11. Clutch housing cap
12. Clutch cable bracket

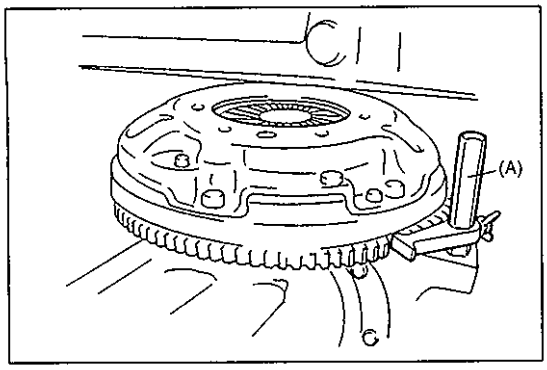

REMOVAL

1) Removal of clutch presupposes that the transmission has been separated from engine according to the method outlined in SECTION 7A TRANSMISSION.
2) Hold flywheel stationary with special tool and remove bolts securing clutch cover to flywheel, and take off clutch cover and disc.

Special Tool
(A): 09924-17810

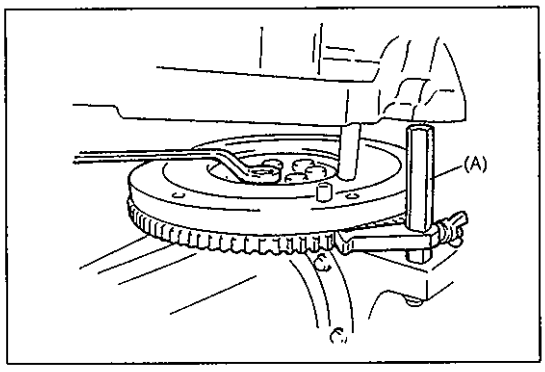

3) Hold flywheel stationary with special tool and remove bolts securing flywheel to crank shaft, and take off flywheel.

Special Tool
(A): 09924-17810

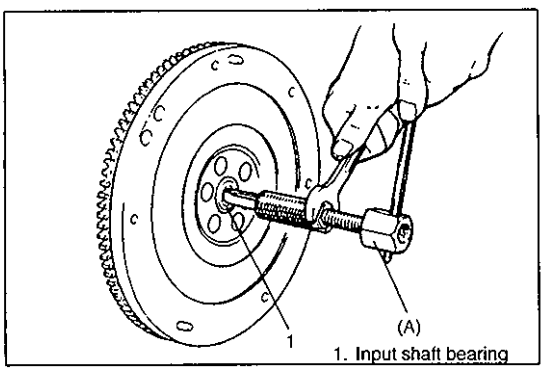

4) Use bearing remover (special tool) for pulling out of input shaft bearing.

Special Tool
(A): 09917-58010

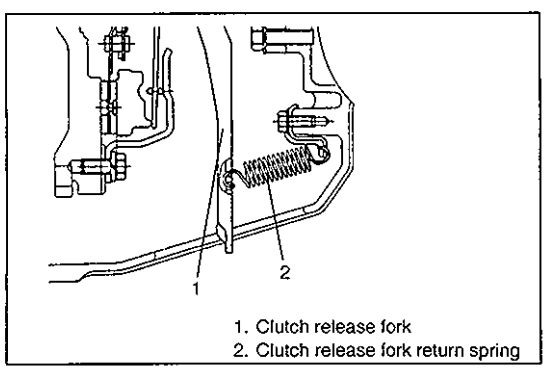

5) Remove clutch release fork return spring.

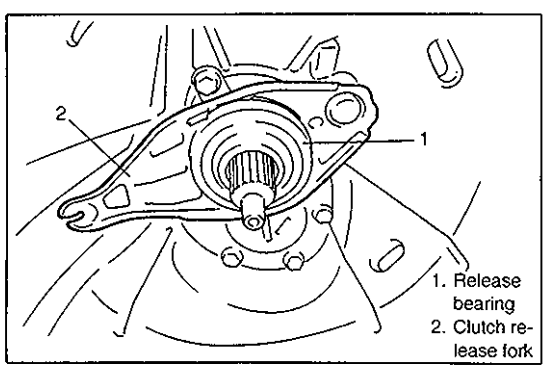

6) Remove release bearing and clutch release fork.

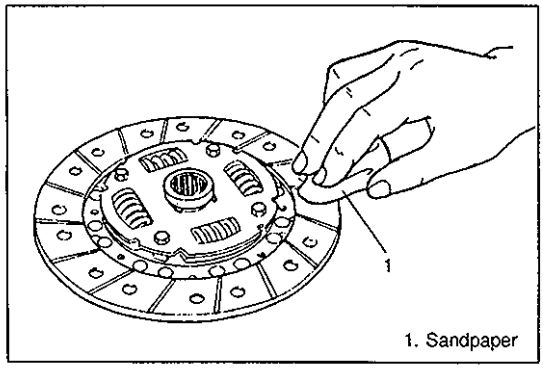

1. Sandpaper

INSPECTION

Clutch Disc Facing Surface Condition

A burnt or glazed (glass-like surface) facing can be reconditioned by grinding it with No. 120 – 200 sandpaper. If surface is in bad condition beyond repair, replace whole clutch disc assembly.

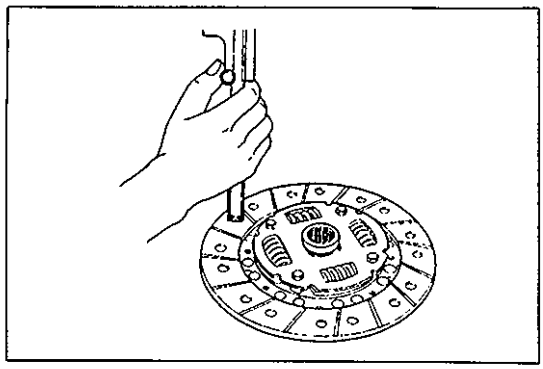

Clutch Facing Wear

Check wear of facing by measuring depth of each rivet head depression, i.e. distance between rivet head and facing surface. If depressing is found to have reached service limit at any of the holes, replace clutch disc assembly.

Rivet head depth

Standard:	**1.2 mm (0.05 in.)**
Service limit:	**0.5 mm (0.02 in.)**

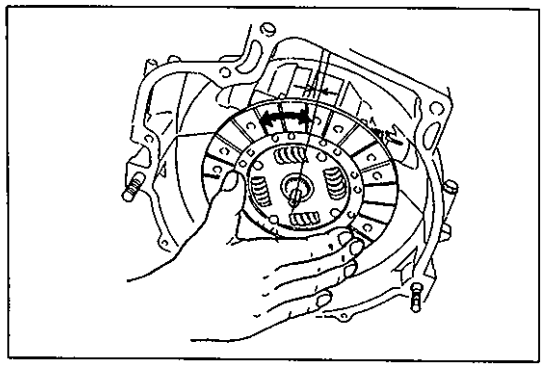

Backlash in Disc Serration Fit

Check backlash by turning disc back and forth as mounted on transmission input shaft. Replace disc assembly if backlash is noted to exceed service limit. Backlash here is a circular displacement as measured with a dial indicator.

Backlash limit in serration fit: 0.8 mm (0.03 in.)

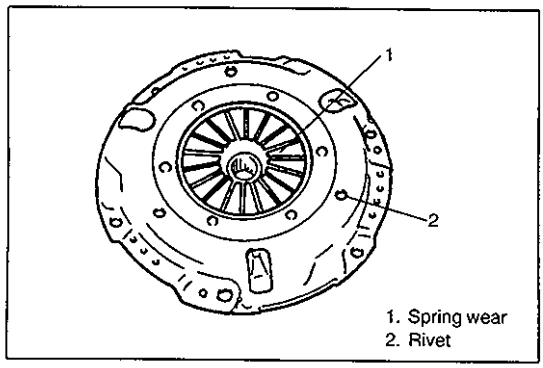

1. Spring wear
2. Rivet

Clutch Cover

Inspect clutch cover for evidence of diaphragm spring rivets getting loose. If rivets are loose or are getting loose, replace cover assembly as such cover makes rattling noise when clutch pedal is depressed.

Inspect tips of tapering fingers (to which the release bearing exerts a push to disengage clutch) for wear. If tips are worn excessively, replace cover assembly.

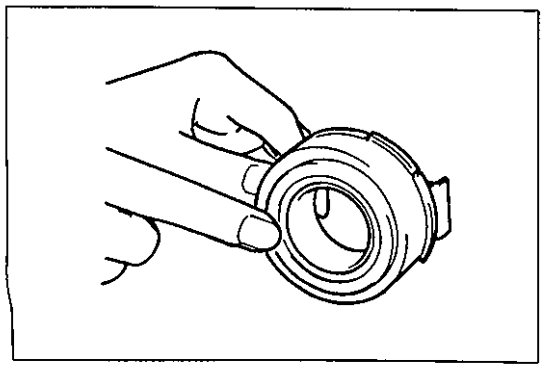

Release Bearing

Replace release bearing if it sticks, rattles or makes abnormal noise when spun and turned by hand.

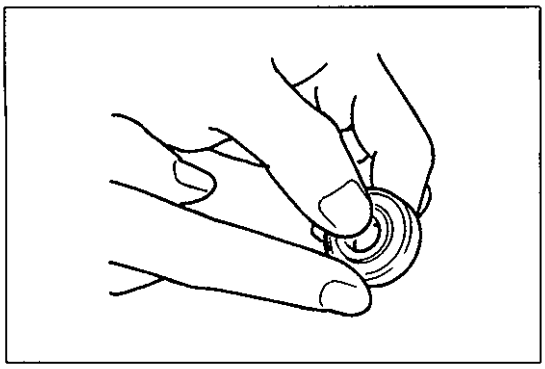

Input Shaft Bearing

Replace input shaft bearing if it sticks, rattles or makes abnormal noise when spun and turned by hand.

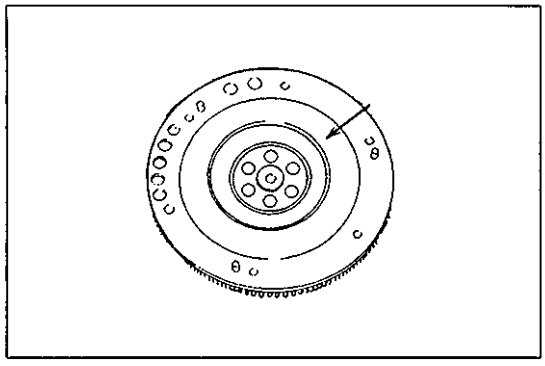

Flywheel

Check surface contacting clutch disc for any wear or damage.

INSTALLATION

NOTE:

- **Before installing flywheel, clutch disc and clutch cover, hoist vehicle and lift transmission by jack up to transmission installation position.**
- **Before assembling, make sure that flywheel surface and pressure plate surface have been cleaned and dried thoroughly.**

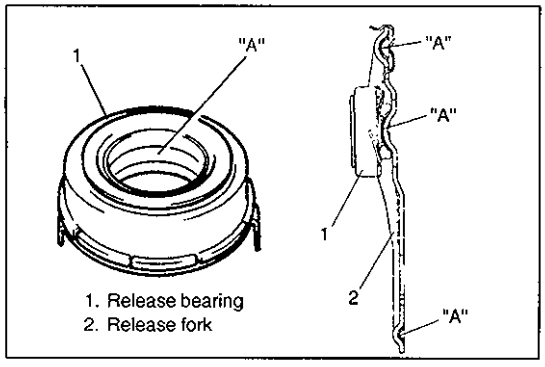

1. Release bearing
2. Release fork

1) Before installing retainer, apply grease to release bearing inner surface and release fork.

"A" Grease: SUZUKI SUPER GREASE A 99000-25010

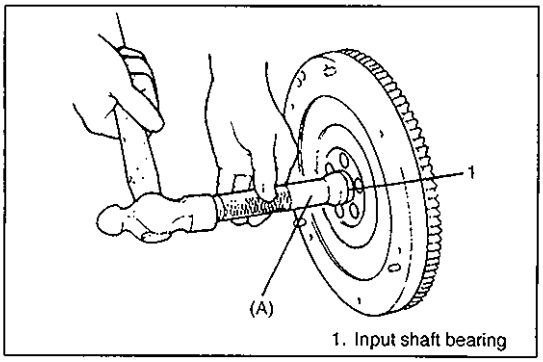

1. Input shaft bearing

2) Install input shaft bearing to flywheel using bearing installer (special tool).

Special Tool
(A): 09925-98210

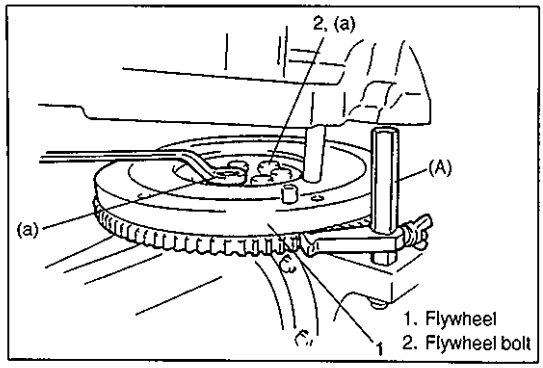

3) Install flywheel to crankshaft and tighten bolts to specification.

Special Tool
(A): 09924-17810

Tightening Torque
(a): 76 N·m (7.6 kg-m, 55.0 lb-ft)

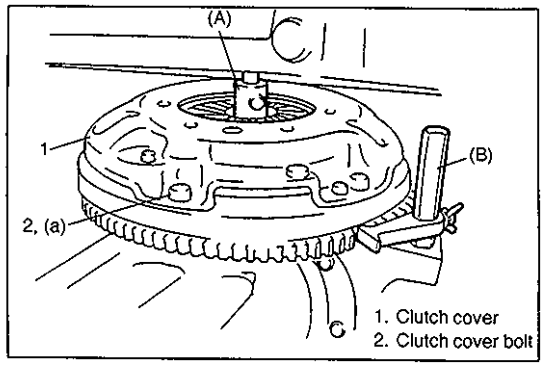

4) Using special tool (clutch center guide), install clutch disc and clutch cover.
Tighten clutch cover bolts to specification using special tool (Flywheel holder).

Special Tool
(A): 09923-36330
(B): 09924-17810
Tightening Torque
(a): 23 N·m (2.3 kg-m, 17.0 lb-ft)

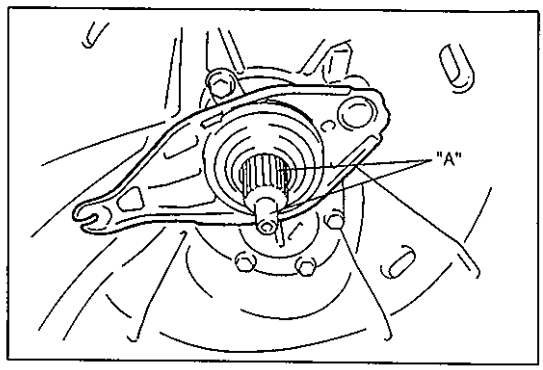

5) Slightly apply grease to input shaft. Then join transmission with engine. Refer to TRANSMISSION REMOUNTING of Section 7A.

"A": Grease 99000-25210

NOTE:
Turn crankshaft with wrench from front while inserting transmission input shaft to clutch disc until splines mesh.

TIGHTENING TORQUE SPECIFICATIONS

Be sure to torque each nut or bolt, if loosened, to specification given below.
If specified tightening torque for particular bolt or nut is not included here, refer to SECTION 0A of this manual.

Fastening Parts	Tightening Torque		
	N·m	kg-m	lb-ft
Flywheel bolts	76	7.6	55.0
Clutch cover bolts	23	2.3	17.0
Clutch release support	29	2.9	21.0
Release fork return spring bolt	10	1.0	7.5

REQUIRED SERVICE MATERIALS

MATERIAL	RECOMMENDED SUZUKI PRODUCT	USE
Lithium grease	SUZUKI SUPER GREASE A (99000-25010)	• Cable junction with pedal shaft arm. • Release fork. • Inside of release bearing
	SUZUKI SUPER GREASE I (99000-25210)	• Input shaft spline and front end.

SPECIAL TOOLS



09917-58010
Bearing remover
(for input shaft bearing)

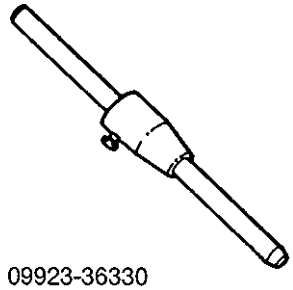

09923-36330
Clutch center guide

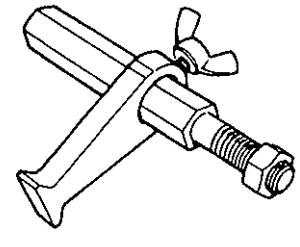

09924-17810
Flywheel holder

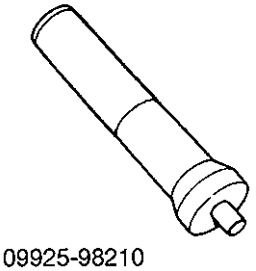

09925-98210
Input shaft bearing
installer

SECTION 7D

TRANSFER

NOTE:
When servicing 2WD vehicles, use the same procedure described in this section but refer to the parts diagram of 2WD vehicles on page 7D-2 to check their differences from 4WD vehicles.

CONTENTS

GENERAL DESCRIPTION 7D- 2
DIAGNOSIS 7D- 5
ON VEHICLE SERVICE 7D- 6
UNIT REPAIR OVERHAUL 7D- 7
Dismounting 7D- 7
Remounting 7D- 9
Disassembly 7D-10
Inspection 7D-16
Assembly 7D-18
TIGHTENING TORQUE SPECIFICATIONS 7D-25
REQUIRED SERVICE MATERIALS 7D-25
SPECIAL TOOLS 7D-26

GENERAL DESCRIPTION

The transfer consists of an input shaft, drive chain, output front shaft (4WD model only), output rear shaft and their accompanying gears, hubs, sleeves, shift shaft, etc. The planetary gear unit installed at the center of the output rear shaft selects the Lo range or the Hi range and the sleeve on the output front shaft side selects the 2WD or 4WD (4WD model only).

1. Input shaft
2. Drive chain
※ 3. Output front shaft
※ 4. Sleeve
※ 5. 2-4 shift fork
※ 6. Synchronizer key
※ 7. Synchronizer ring
※ 8. Lock-up plate
9. Output rear shaft
※ 10. Hi-Lo shift fork
※ 11. Pinion gear
※ 12. Sprocket gear
13. Speedometer sensor gear
※ 14. Key retainer
※ 15. Key spring
※ 16. Sun gear
※ 17. Shift fork spacer
※ 18. Ring gear
※ 19. Planetary carrier
20. Front case
21. Rear case

※: 4WD model only

[4WD model]

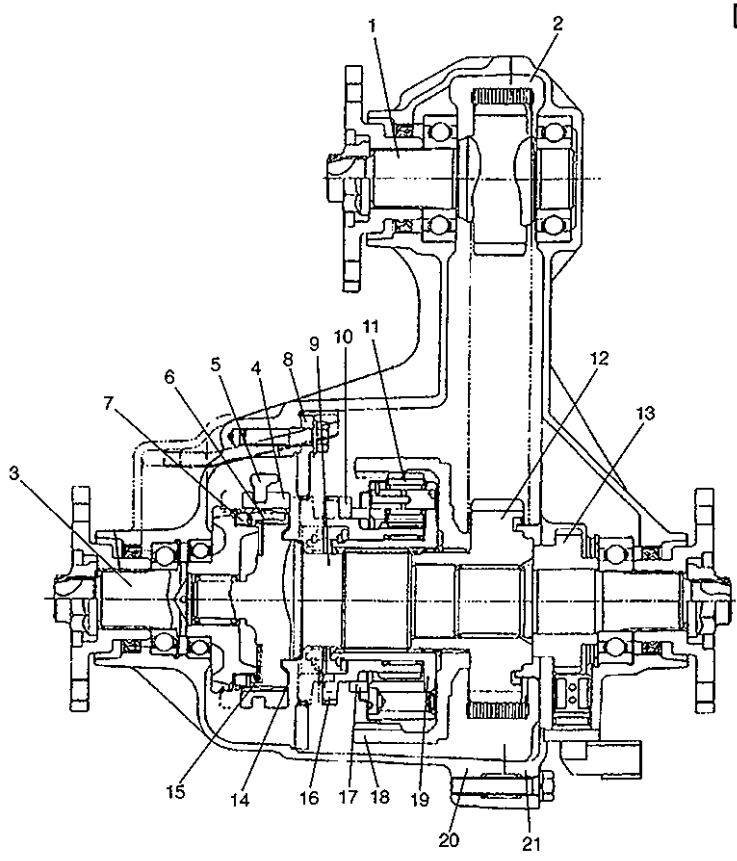

[2WD model]

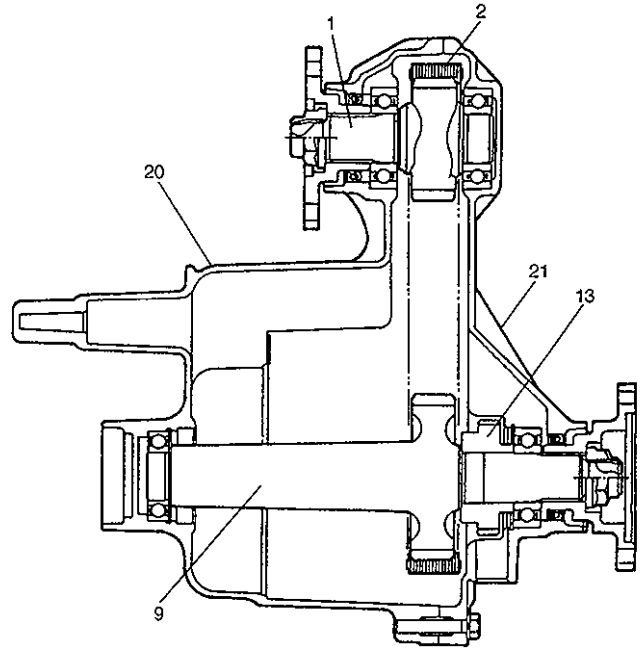

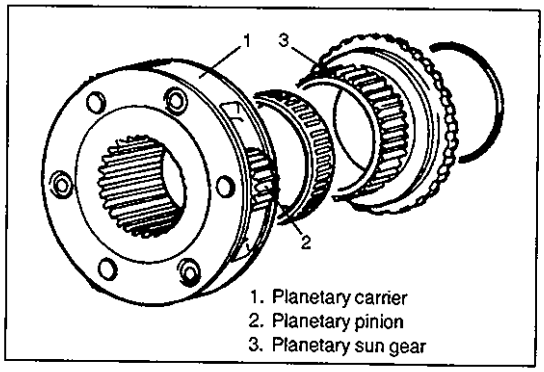

1. Planetary carrier
2. Planetary pinion
3. Planetary sun gear

PLANETARY GEAR UNIT

The planetary gear unit consists of a planetary carrier, 3 pinion gears and a sun gear. As the Hi-Lo shift fork moves this planetary gear unit, the gear is selected in the 4H↔N↔4L pattern.

4H range

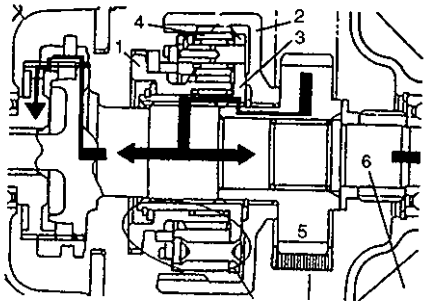

4L range

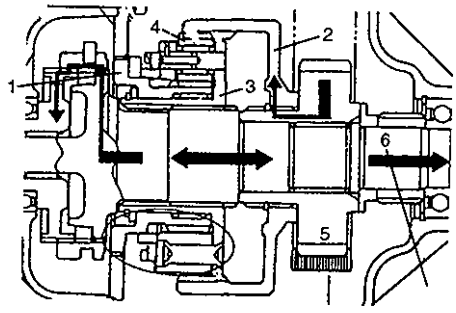

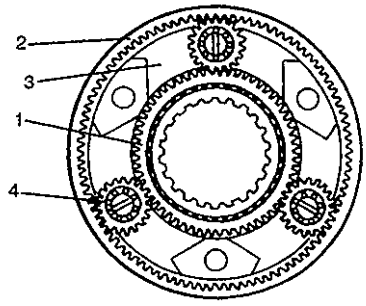

1. Sun gear
2. Ring gear
3. Planetary carrier
4. Planetary pinion
5. Sprocket output gear
6. Output rear shaft

Planetary Gear Operation

4H range

As the sprocket output gear and the output rear shaft are engaged through the planetary carrier serration, they turn as one unit.

L range

As the sun gear is engaged with the lock-up plate and fixed, rotation of the sprocket output gear is transmitted through the ring gear, planetary pinion and planetary carrier while being reduced and causes the output rear shaft to turn.

GEAR SHIFT CONTROL

The gear is shifted to the 2H, 4H or 4L shift position by using the shift lever provided inside of the vehicle. The control mechanism consists of a shift lever, shift shaft, interlock block, shift fork, etc.

The shift lever is installed directly to the transfer case. To shift the shift control lever between 2H and 4H positions, move it in the shift shaft direction. To shift it from the 4H position to the 4L position, push it down at the 4H position and then move it in the shift shaft direction.

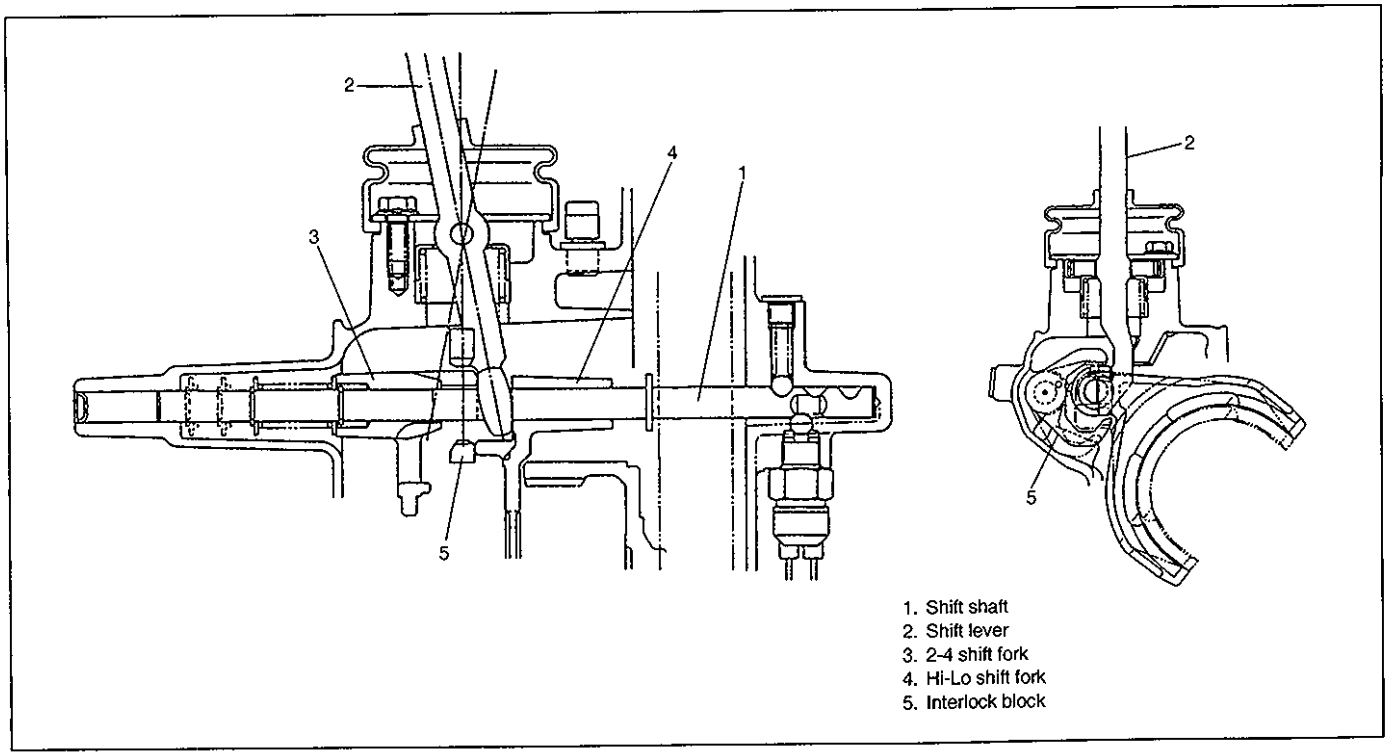

Control Mechanism

The shift lever fitted through the shift shaft and fixed to it with a pin. Also, the 2-4 shift fork to shift the gear in the 2H↔4H pattern and the Hi-Lo shift fork in the 4H↔4L pattern are fitted so that they can slide on the shift shaft. The interlock block cannot move in the shaft direction of the shift shaft as its movement is restricted by the interlock pin installed to the transfer case, but it can turn within the range of the groove in the interlock block. Interlock block can be turned by pushing shift control lever downward at 4H shift position, it restricts 2-4 shift fork movement and enable Hi-Lo shift fork to side forward, causes 4L shift position.

DIAGNOSIS

Condition	Possible Cause	Correction
Gear slipping out of mesh	• Worn shift fork shaft • Worn shift fork or sleeve • Weak or damaged locating spring • Worn bearings on input shaft or output shaft • Worn chamfered tooth on sleeve or gear • Worn synchronizer ring	Replace Replace Replace Replace Replace sleeve and gear Replace
Gears refusing to disengage	• Distorted shift shaft or shift fork • Weakened or broken synchronizer spring	Replace Replace
Hard shifting	• Inadequate or insufficient lubricant • Worn chamfered tooth on sleeve or gear • Distorted shift shaft	Replenish Replace sleeve and gear Replace
Noise	• Inadequate or insufficient lubricant • Damaged or worn bearing (s) • Damaged or worn gear (s) • Damaged or worn chamfered tooth on sleeve or gear	Replenish Replace Replace Replace

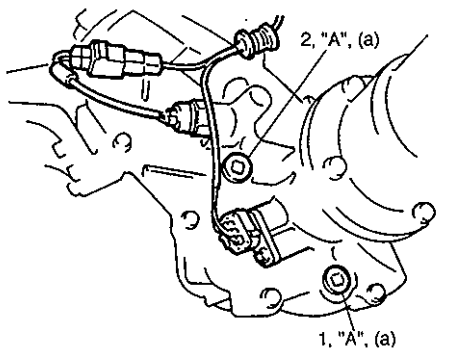

1. Drain plug
2. Level plug

Viscosity chart
SAE

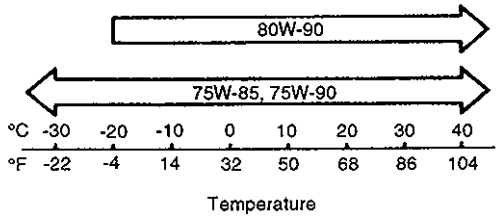

ON VEHICLE SERVICE

OIL CHANGE

1) Before changing or inspecting oil, be sure to stop engine and lift vehicle horizontally.
2) With vehicle lifted up, check oil level and leakage. If leakage exists, correct or repair it.
3) Drain old oil, tighten drain plug after applying sealant to its thread and fill new specified oil as shown below by specified amount (roughly up to level hole).
   "A" : Sealant 99000-31110
   Tightening Torque
   (a): 23 N·m (2.3 kg-m, 17.0 lb-ft)
   NOTE:
   - **It is highly recommended to use SAE 75W-90 gear oil.**
   - **Whenever vehicle is hoisted for any other service work than oil change, also be sure to check for oil leakage.**

   Gear Oil Specification

Oil grade:	**API GL-4**
Viscosity:	**SAE 75W-85, 75W-90 or 80W-90**
Oil Capacity:	**0.9 liters (1.9/1.6 US/Imp. pt) (4WD model)**
	1.34 liters (2.8/2.4 US/Imp. pt) (2WD model)

4) Torque level/filler plug as specified below after applying sealant to its thread.
   "A": Sealant 99000-31110
   Tightening Torque
   (a): 23 N·m (2.3 kg-m, 17.0 lb-ft)

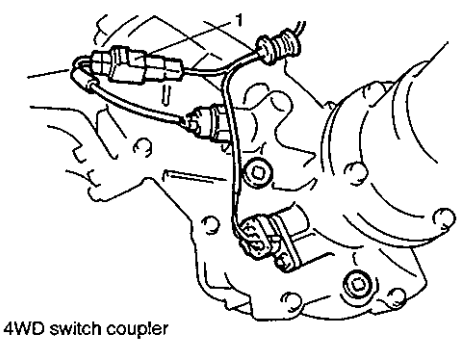

1. 4WD switch coupler

4WD SWITCH

Inspection

1) Hoist vehicle.
2) Disconnect 4WD switch coupler.

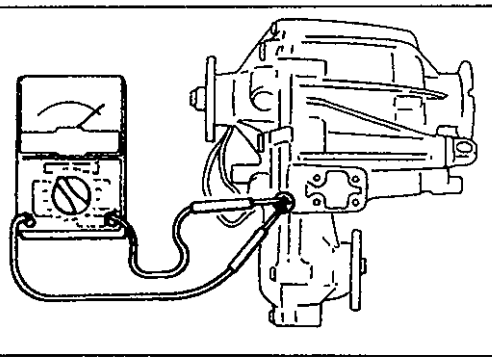

3) Check continuity between two terminals of 4WD switch.

Transfer position	
2H	Not continuity
4H, 4L	Continuity

4) Connect 4WD switch coupler.

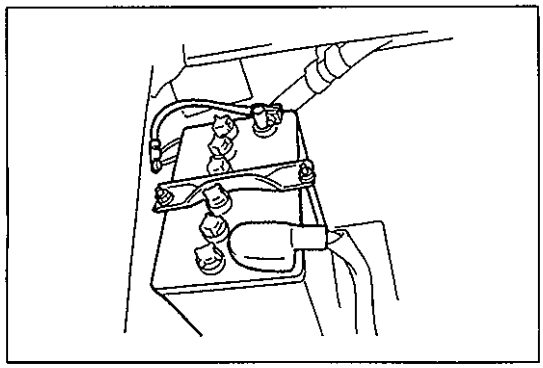

UNIT REPAIR OVERHAUL

DISMOUNTING

In Engine Room

1) Disconnect negative cable at battery.

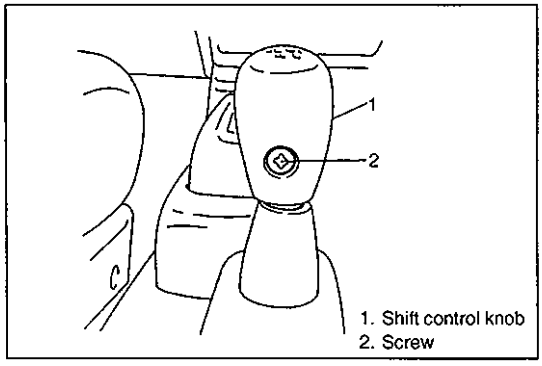

1. Shift control knob
2. Screw

In Cabin

1) Remove transfer shift knob by removing screw.

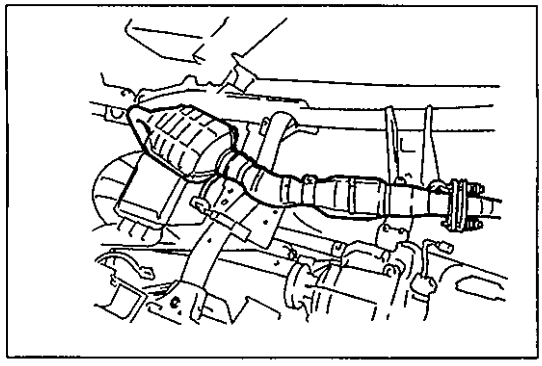

On Lift

1) Drain transfer oil (Refer to p.7D-6).
2) Remove exhaust pipe.

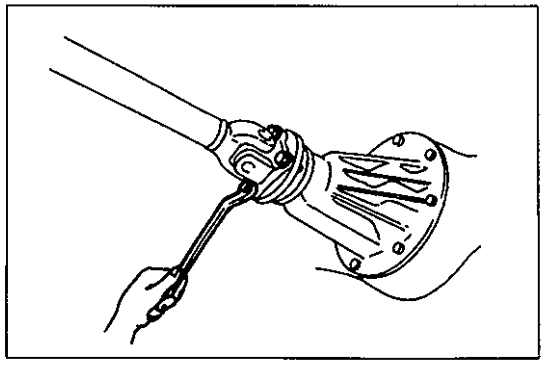

3) Give match marks on each joint flange and propeller shaft.
4) Remove securing bolts from each flange connection, sever 3 propeller shafts from transfer gear box and suspend propeller shafts with a wire hook or like.

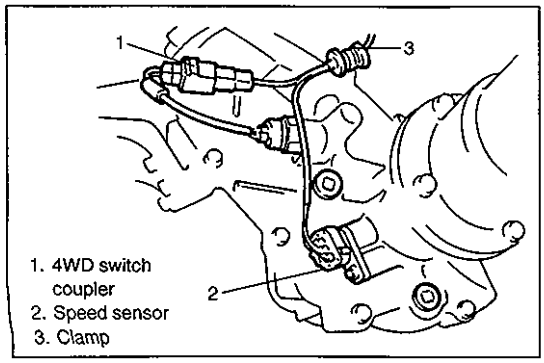

1. 4WD switch coupler
2. Speed sensor
3. Clamp

5) Disconnect 4WD switch wire at coupler and unclamp harness. Disconnect speed sensor coupler.

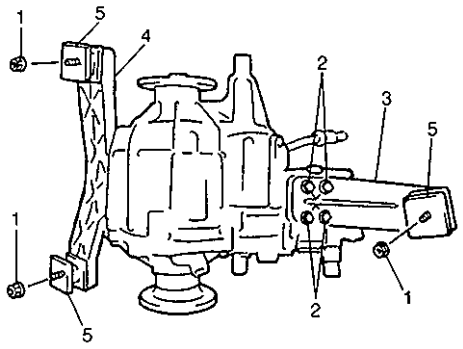

1. Mounting nut
2. Mounting bolt
3. Mounting right bracket
4. Mounting left bracket
5. Mounting

6) With transfer supported on jack, remove 3 mounting nuts and 4 bolts.
7) Remove transfer with mountings from body.
8) Remove mounting from transfer.

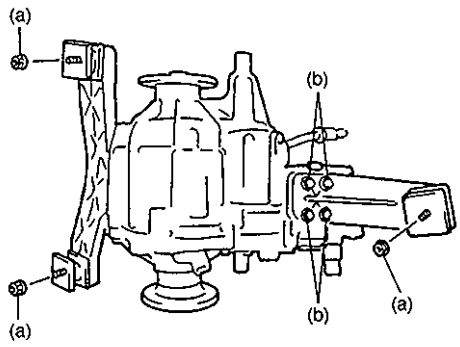

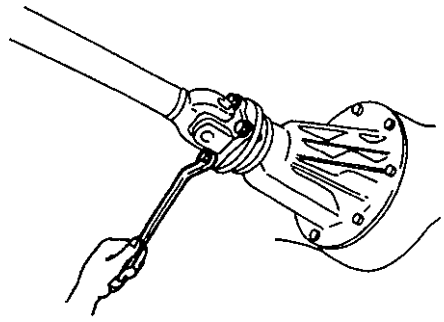

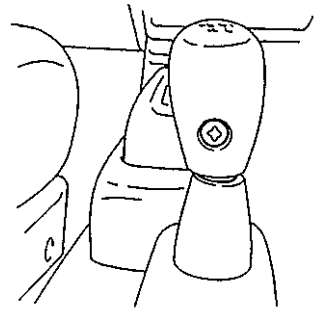

REMOUNTING

For remounting, reverse dismounting procedure, noting following.

- Use specified torques as given below.

Tightening Torque

(a): 30 N·m (3.0 kg-m, 22.0 lb-ft)

(b): 23 N·m (2.3 kg-m, 17.0 lb-ft)

- Set each clamp for wiring securely.
- Connect couplers to speed sensor and 4WD switch securely.
- Fill gear oil to transfer as specified.
- When installing propeller shafts, align the each match marks. For tightening torque of flange bolts, refer to SECTION 4B.
- Install exhaust pipe (refer to SECTION 6K).
- Install shift knob.
- Connect battery and check function of engine and trans.

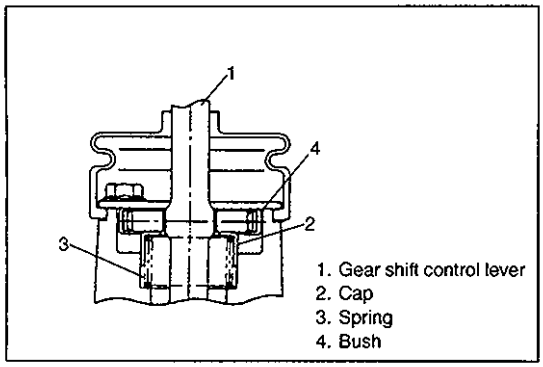

1. Gear shift control lever
2. Cap
3. Spring
4. Bush

DISASSEMBLY

1) Remove boot and then plate, bush and spring.
Disconnect gear shift control lever.

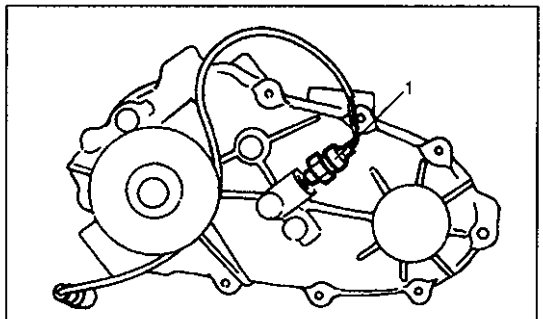

1. 4WD switch

2) Remove 4WD switch and take out steel ball.

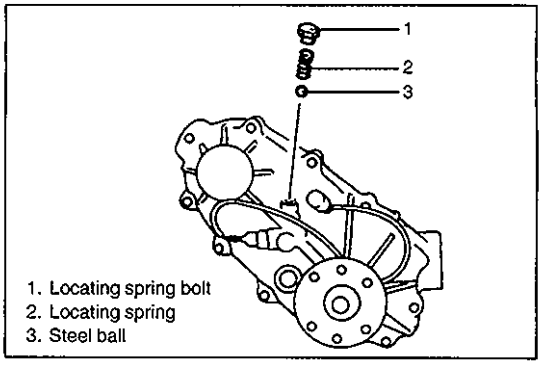

1. Locating spring bolt
2. Locating spring
3. Steel ball

3) Remove locating spring bolt and take out locating spring and steel ball.

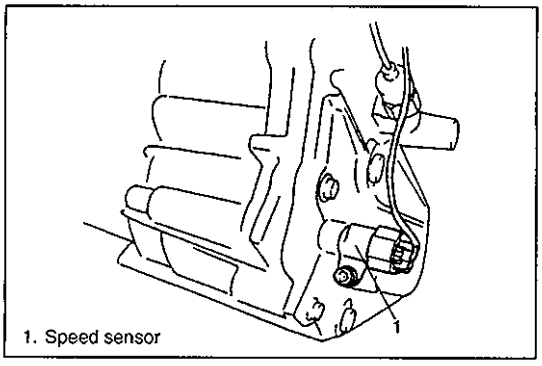

1. Speed sensor

4) Remove speed sensor.

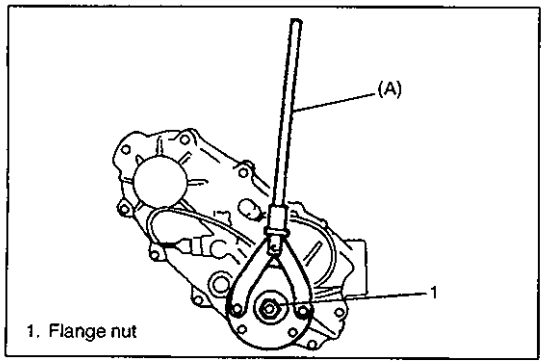

1. Flange nut

5) Remove rear output side flange. To lock flange, use special tool. With flange locked, remove flange bolt.

Special Tool
(A) : 09930-40113

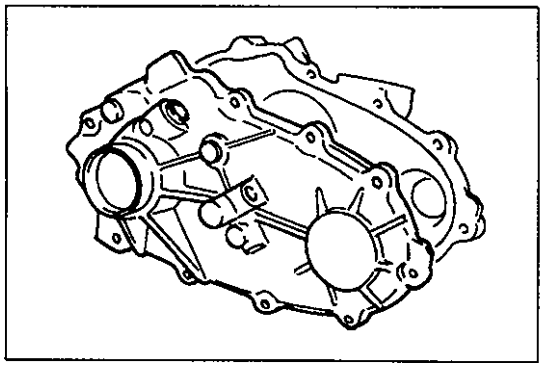

6) Remove 11 rear case bolts and then separate case by using special tool.

NOTE:
To separate case, use special tool at 2 points in turn and make opening wider evenly.

Special Tool
09912-34510

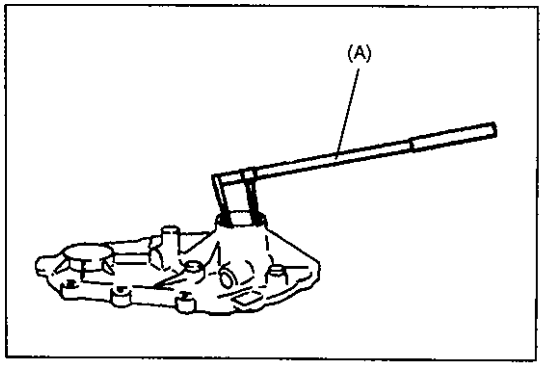

7) Remove oil seal from rear case by using special tool.

Special Tool
(A) : 09913-50121

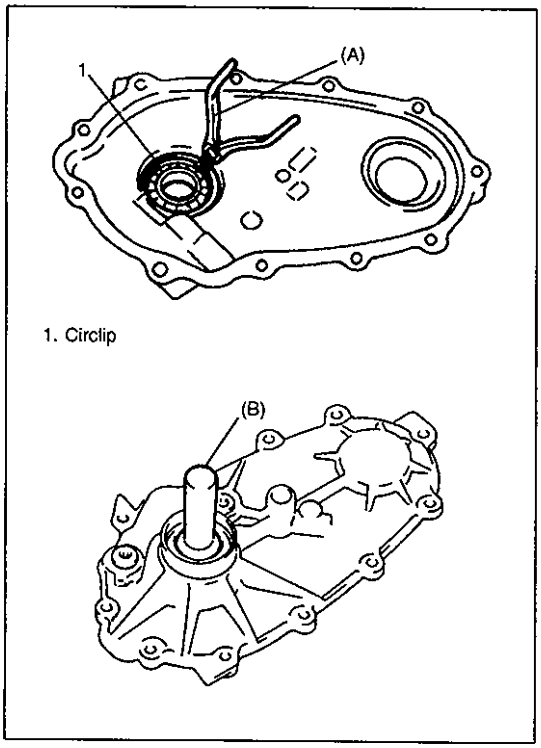

8) Remove circlip by using special tool and then remove bearing by using special tool.

Special Tool
(A) : 09900-06108
(B) : 09913-75830

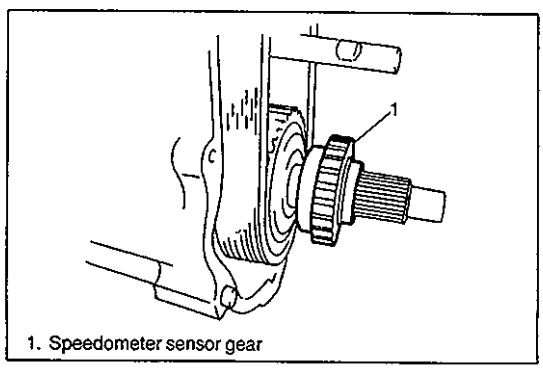

9) Pull out speedometer sensor gear.

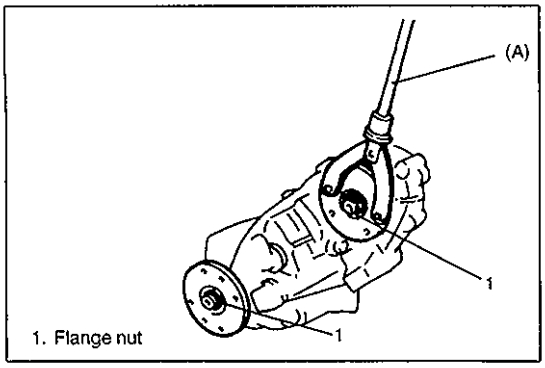

1. Flange nut

10) Remove flanges. To lock flange, use special tool. With flange locked, remove flange nut.

Special Tool
(A) : 09930-40113

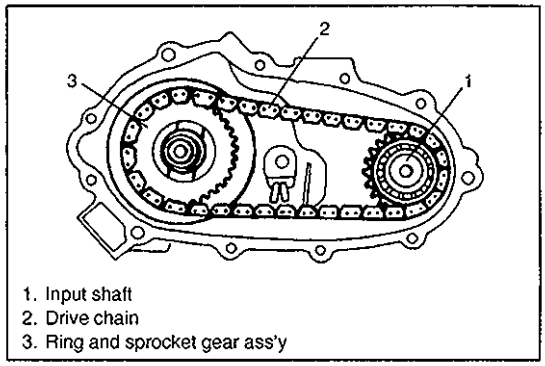

1. Input shaft
2. Drive chain
3. Ring and sprocket gear ass'y

11) Remove drive chain, input shaft and ring and sprocket gear ass'y as an assembly.

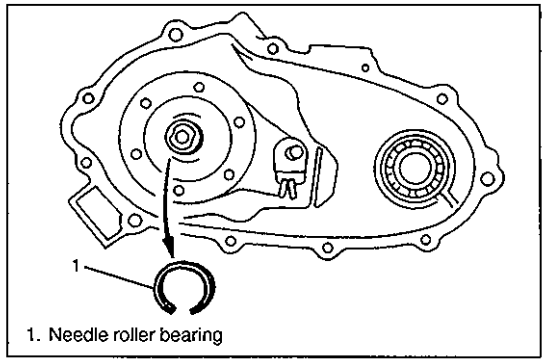

1. Needle roller bearing

12) Remove needle roller bearing.

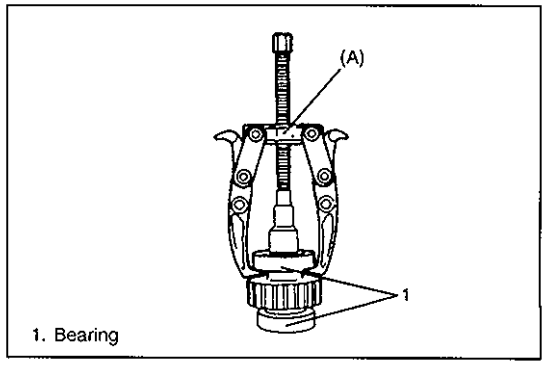

1. Bearing

13) Pull out bearings from input shaft by using Special tool.

Special Tool
(A) : 09913-65135

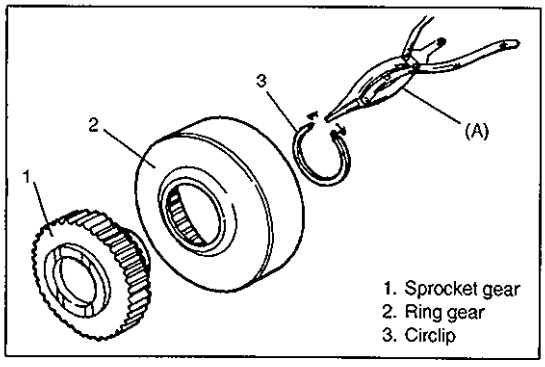

1. Sprocket gear
2. Ring gear
3. Circlip

14) Disassemble ring and sprocket gear ass'y by removing circlip.

Special Tool
(A) : 09920-76010

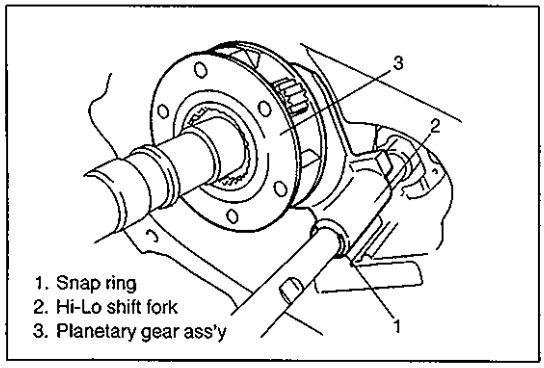

1. Snap ring
2. Hi-Lo shift fork
3. Planetary gear ass'y

15) Remove snap ring and pull out Hi-Lo shift fork and planetary gear ass'y as an assembly.

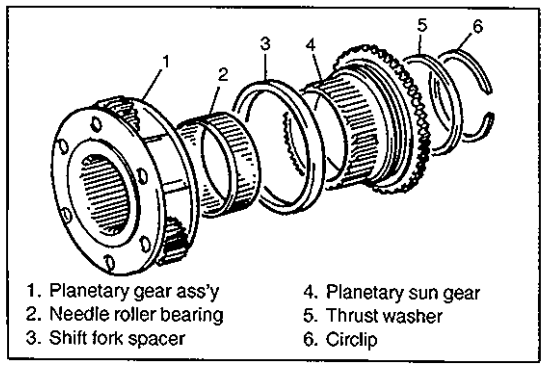

1. Planetary gear ass'y
2. Needle roller bearing
3. Shift fork spacer
4. Planetary sun gear
5. Thrust washer
6. Circlip

16) Disassemble planetary gear unit by removing circlip.

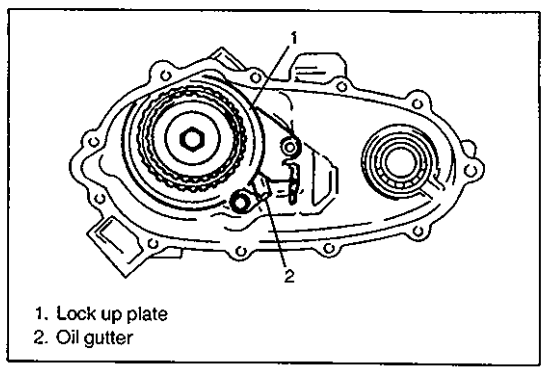

1. Lock up plate
2. Oil gutter

17) Remove lock up plate and oil gutter by removing 3 bolts.

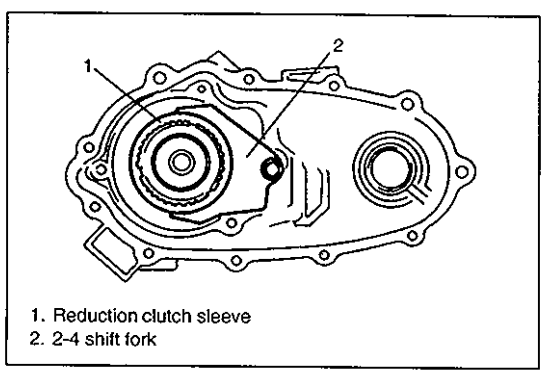

1. Reduction clutch sleeve
2. 2-4 shift fork

18) Remove output rear shaft, shift shaft, reduction clutch sleeve and 2-4 shift fork as an assembly.
Disassemble shift shaft by removing snap ring as necessary.
19) Remove synchronizer ring.

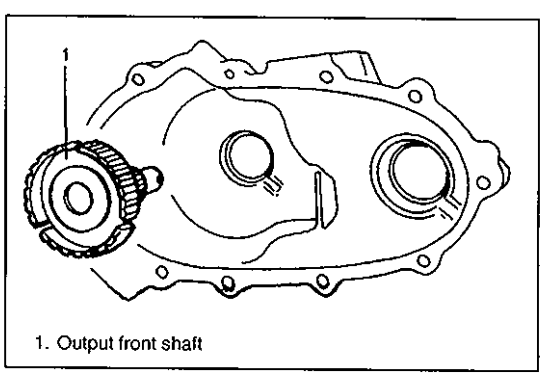

1. Output front shaft

20) Remove output front shaft.

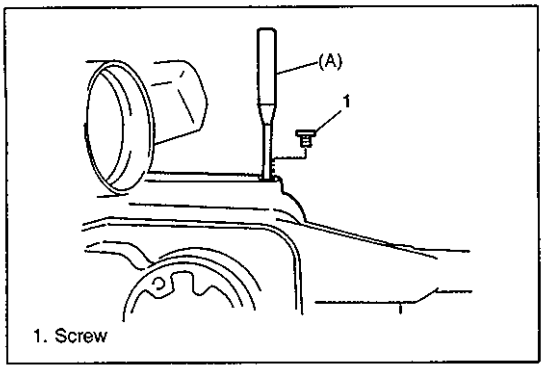

1. Screw

21) Remove screw and drive out pin with special tool.

Special Tool
(A) : 09922-85811

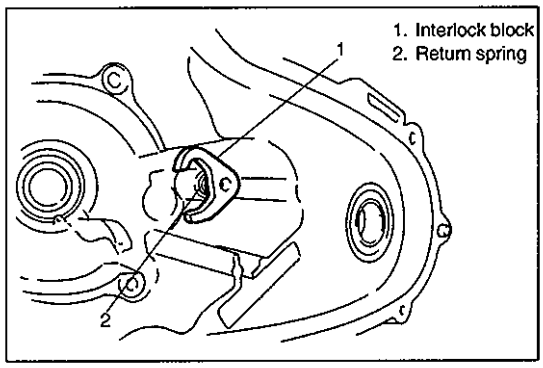

1. Interlock block
2. Return spring

22) Remove interlock block and spring.

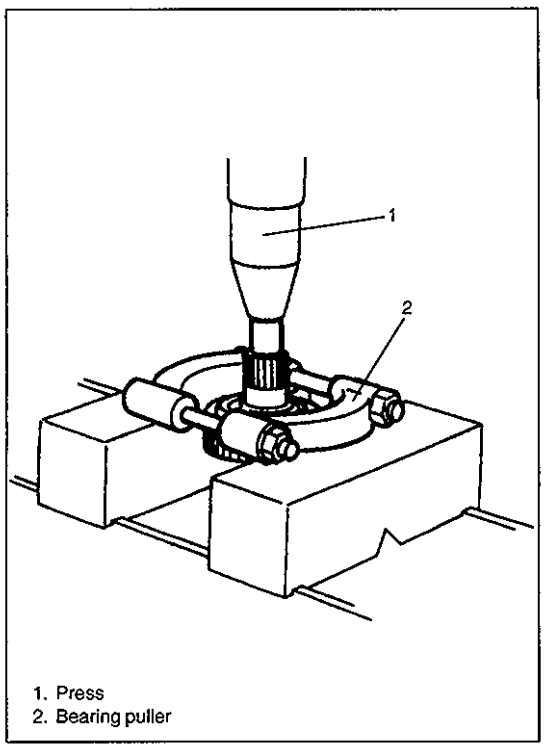

1. Press
2. Bearing puller

23) By using bearing puller and press, remove bearing from output front shaft.

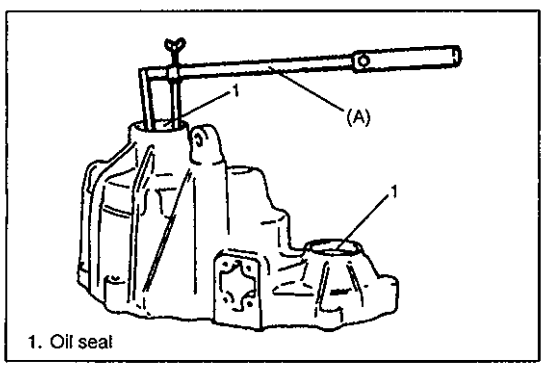

1. Oil seal

24) By using special tool, remove oil seals from front case.

Special Tool
(A): 09913-50121

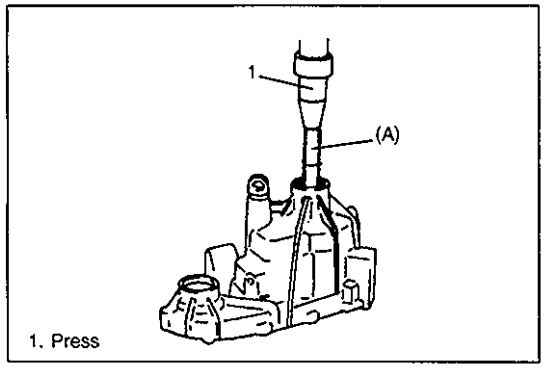

1. Press

25) Remove circlip and then, remove bearing from front case.

Special Tool
(A): 09913-75830

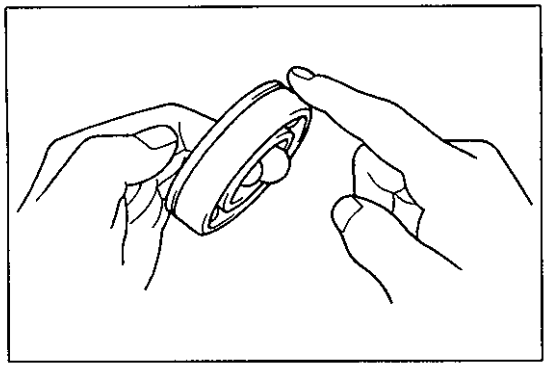

INSPECTION

- Check each ball bearing for smooth rotation.
  If found abnormal, replace.
- Check needle bearing and bearing contacting surface for damage. Replace as required.

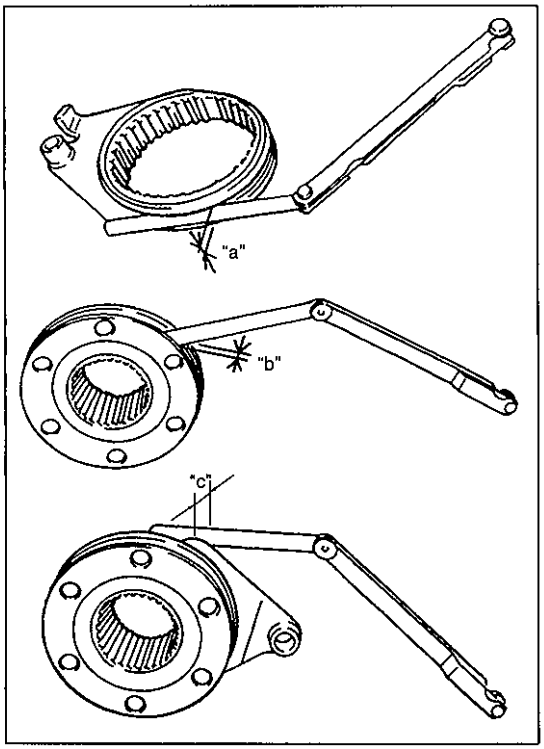

- Check gear tooth surface and shift mechanism in the same manner as with transmission.
  Correct or replace as necessary.

  Especially for following parts, measure each clearance
  Clearance Between Sleeve and 2-4 Shift Fork "a":
  Service Limit 1.0 mm (0.039 in.)
  If clearance exceeds service limit, replace sleeve and 2-4 shift fork.
  Thrust Clearance Between Pinion gear and carrier "b":
  Standard 0.15–0.55 mm (0.0059–0.021 in)
  If clearance is out of standard value, replace planetary carrier sub-ass'y.
  Clearance Between Planetary Gear Unit and Hi-Lo Shift Fork "c":
  Service Limit 1.0 mm (0.039 in).
  If clearance exceeds service limit, replace planetary sun gear, shift fork spacer and Hi-Lo shift fork.

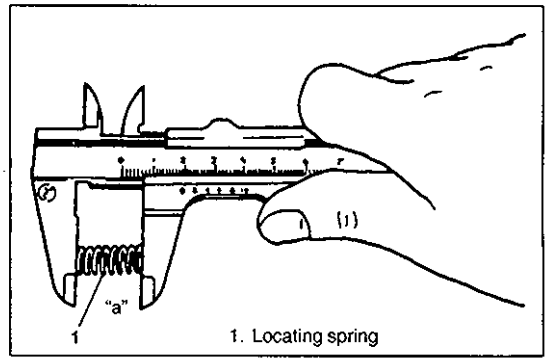

1. Locating spring

- Check each spring for distortion or breakage and change it with new one as necessary.
  Especially for locating springs, measure each free length and replace if it is below service limit

  Locating spring free length "a":

Standard	**23.7 mm (0.933 in.)**
Service limit	**22.0 mm (0.866 in.)**

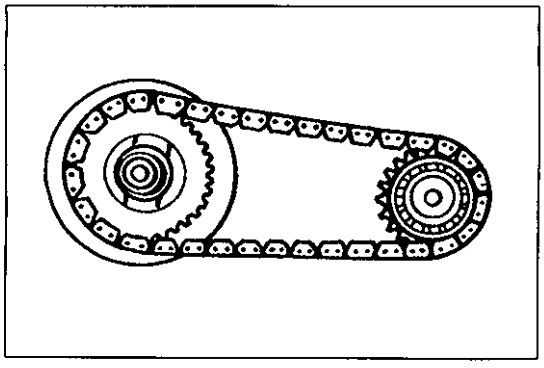

- Check drive chain and sprockets for abnormal wear or damage. Replace as required.
- Check oil seal for leakage and its lip for excessive hardness. If either is found, replace.
  Also, check corresponding surface of shaft where oil seal lip contacts. Correct or replace as necessary.

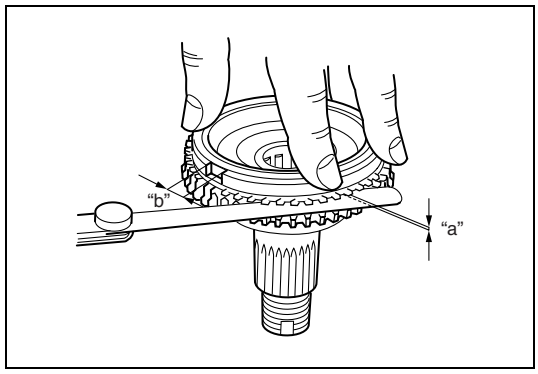

- Check clearance "a" between synchronizer ring and output front shaft while lightly pushing synchronizer ring by the hand, key slot width "b" in synchronizer ring and each chamfered tooth of gear and synchronizer ring and synchronizer ring and replace with new one, if necessary. Also, check gear tooth.

Clearance "a": Standard 0.5 – 1.2 mm (0.020 – 0.047 in.)
Service limit 0.4 mm (0.015 in.)
Slot width "b": Standard 12.3 mm (0.484 in.)
Service limit 12.6 mm (0.496 in.)

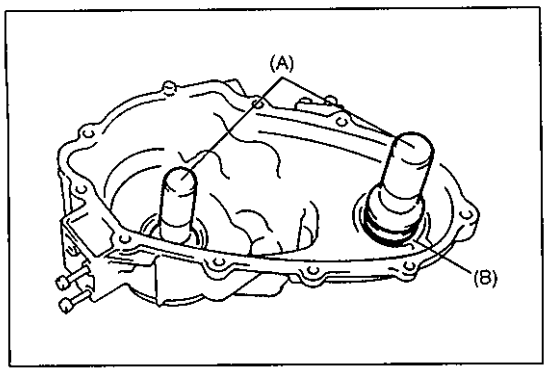

ASSEMBLY

1) Install bearing to front case by using special tool and press.

Special Tool
(A): 09913-75810
(B): 09944-66020

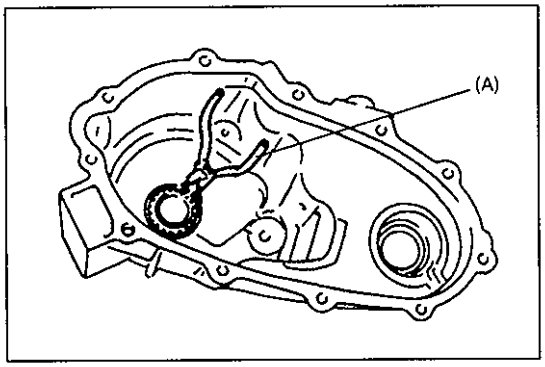

2) Fix output front shaft with circlip by using special tool.

Special Tool
(A): 09900-06108

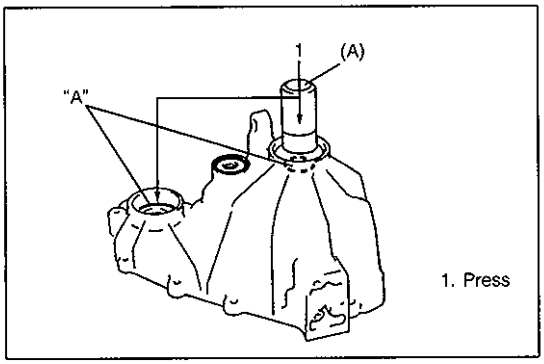

3) By using special tool and hummer, install oil seal to front case, Apply grease to each oil seal lip.

Special tool
(A): 09913-75810
NOTE:
Refer to figure below for each oil seal installation position
Grease "A": 99000-25010

Oil seal installation position

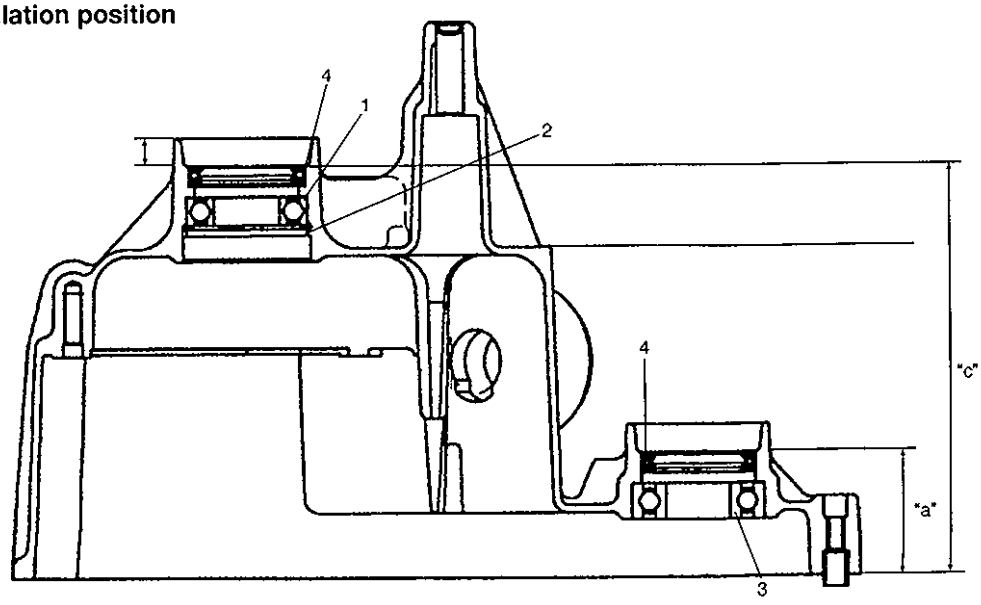

"a": 53.7 ± 0.5 mm
"c": 179.8 ± 0.5 mm

1. Output front bearing
2. Circlip
3. Input bearing
4. Oil seal

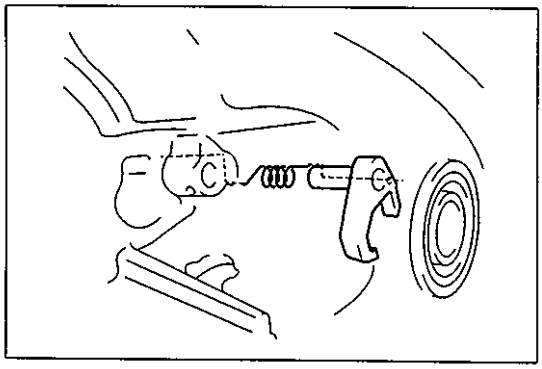

4) Install interlock block and spring as shown in figure.

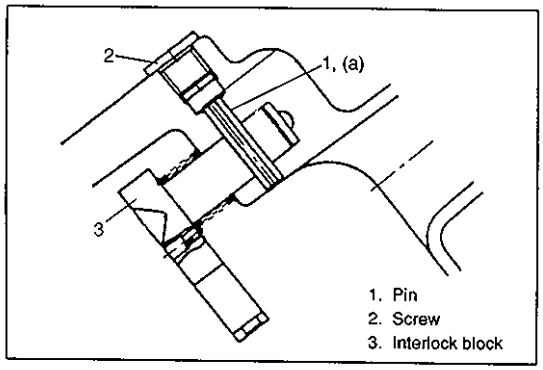

5) Drive in pin a little with special tool and tighten screw.

Special Tool
09922-85811

Tightening Torque
(a): 25 N·m (2.5 kg-m, 18.0 lb-ft)

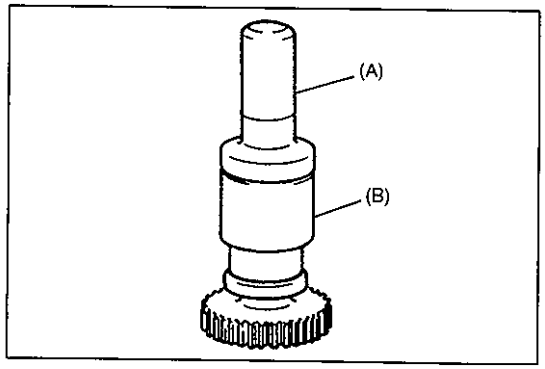

6) By using special tools and press, install bearing to output shaft.

Special Tool
(A): 09913-75520
(B): 09940-53111

7) Install output front shaft to front case.

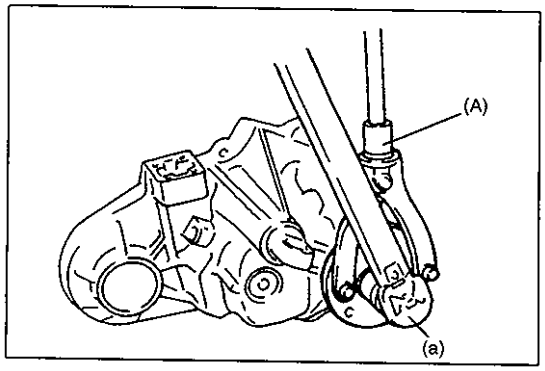

8) Install flange, tighten flange nut and caulk nut.

Special Tool
(A): 09930-40113

Tightening Torque
(a): 130 N·m (13.0 kg-m, 94 lb-ft).

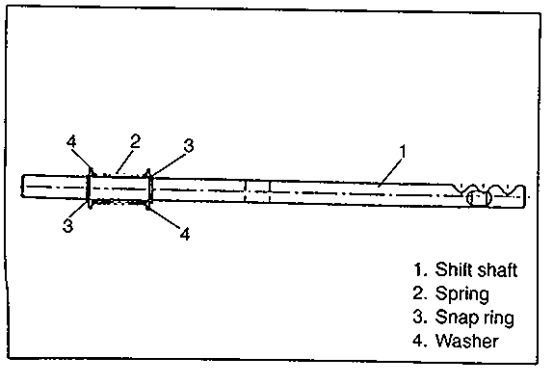

9) Install shift shaft to front case with spring, washers and snap rings installed as shown in figure.

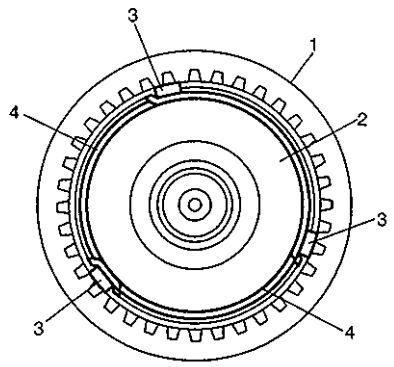

1. Sleeve
2. Output rear shaft
3. Key
4. Key spring

10) Assemble output rear shaft, sleeve, keys and key springs as shown in figure. Sleeve has specific installing direction.

NOTE:
Install key springs, deviating their openings so that they are not in line with each other.

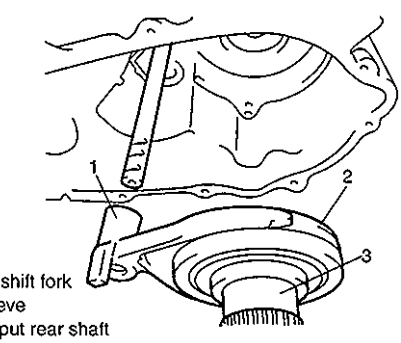

1. 2-4 shift fork
2. Sleeve
3. Output rear shaft

11) Install output rear shaft and 2-4 shift fork as an assembly.

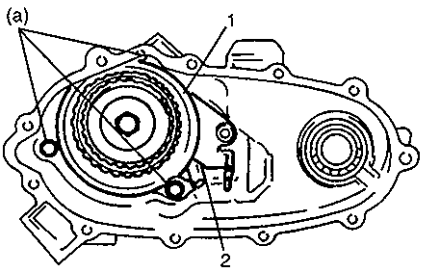

1. Lock up plate
2. Oil gutter

12) Install lock up plate and oil gutter and tighten 3 bolts.

Tightening Torque
(a): 28 N·m (2.8 kg-m, 20.5 lb-ft).

NOTE:
Chamfer of lock up plate must face to rear side.

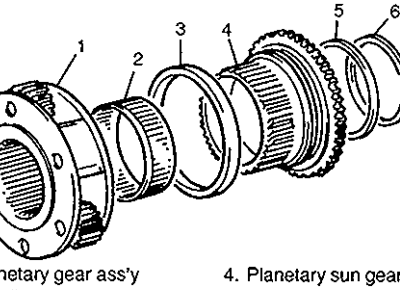

1. Planetary gear ass'y
2. Needle roller bearing
3. Shift fork spacer
4. Planetary sun gear
5. Thrust washer
6. Circlip

13) Assemble planetary gear ass'y, shift fork spacer, needle roller bearing, planetary sun gear and thrust washer and secure then with circlip.

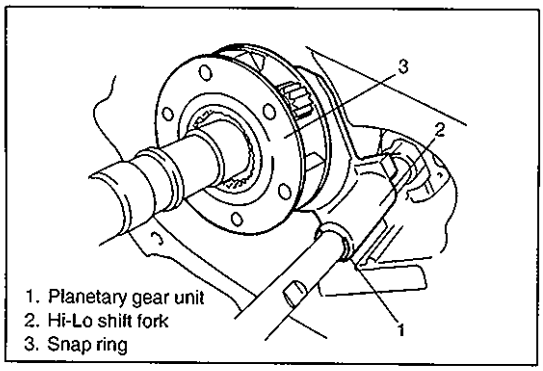

1. Planetary gear unit
2. Hi-Lo shift fork
3. Snap ring

14) Install planetary gear unit and Hi-Lo shift fork to output rear shaft as an assembly. Fit snap ring to shift shaft.

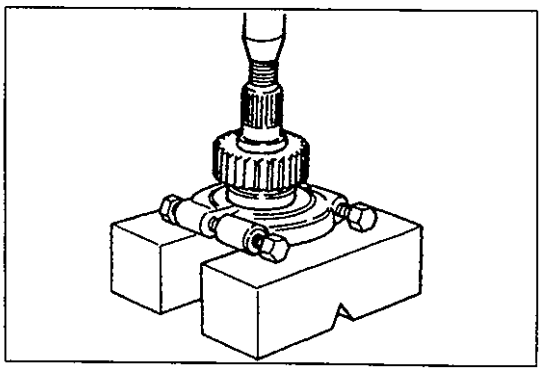

15) Install bearing to input shaft by using bearing puller and press.

NOTE:
Fit bearing puller at inner race of bearing.

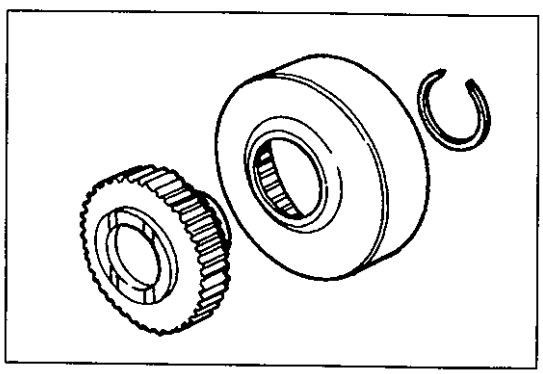

16) Assemble ring gear and sprocket gear and secure them with circlip.

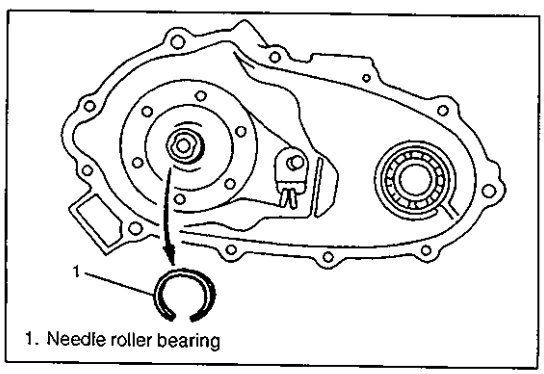

1. Needle roller bearing

17) Fit needle roller bearing to output shaft.

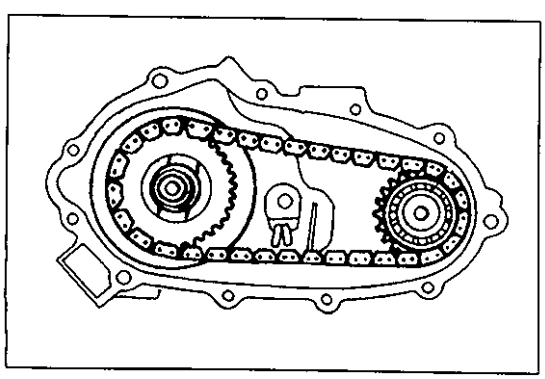

18) Install input shaft, sprocket gear and drive chain to front case as an assembly.

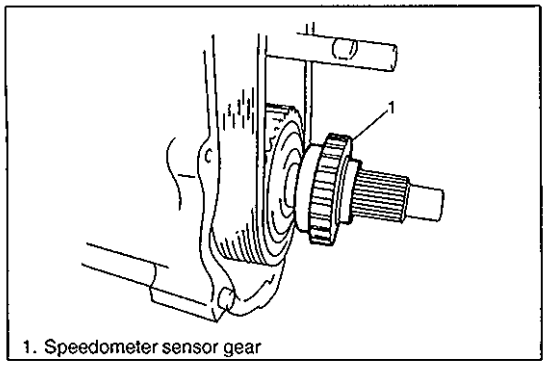

1. Speedometer sensor gear

19) Install speedometer sensor gear to output shaft.

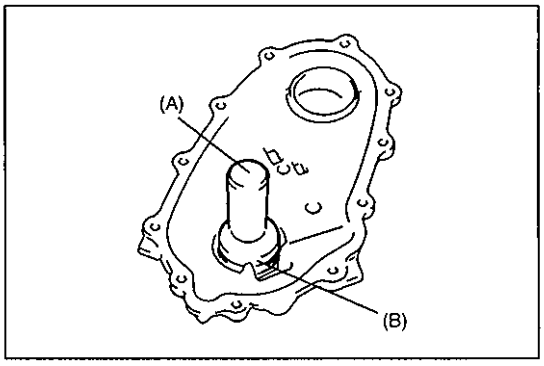

20) Install bearing to rear case by using special tool and press and fix it with circlip.

Special Tool
(A): 09913-75810
(B): 09944-66020

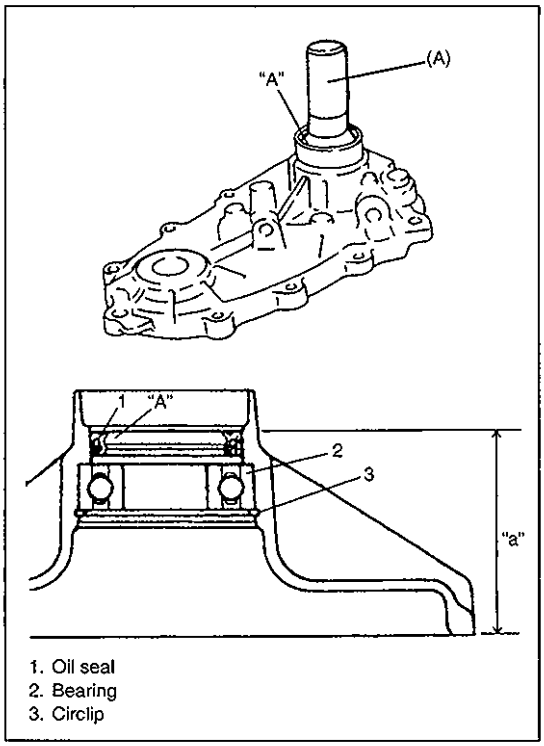

1. Oil seal
2. Bearing
3. Circlip

21) By using special tool and hammer, install oil seal to rear case. Apply grease to oil seal lip.

NOTE:
Refer to figure for oil seal installation position.

Special Tool
(A): 09913-75810
Grease "A" : 99000-25010

"a": 69.35 ± 0.5 mm (2.730 ± 0.020 in.)

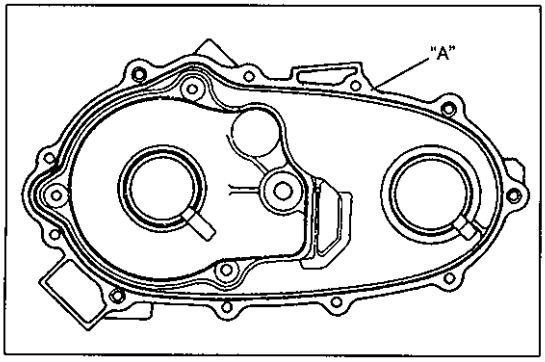

22) After cleaning mating surfaces of both cases, coat mating surface of front case with sealant evenly and put it over rear case.

"A": Sealant 99000-31110

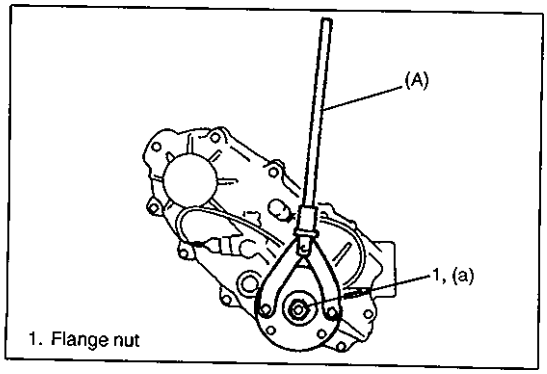

23) Align front case and rear case, then install flange, tighten flange nut and calk it.

Special Tool
(A): 09930-40113

Tightening Torque
(a): 130 N·m (13.0 kg-m, 94.0 lb-ft)

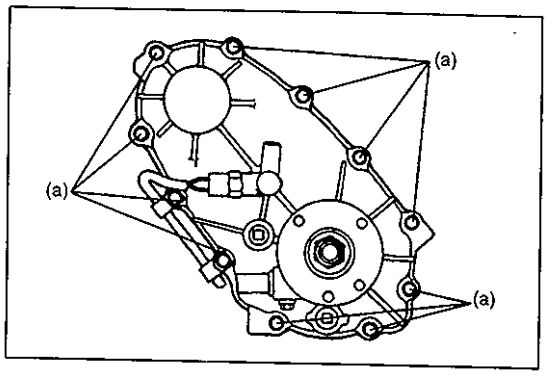

24) Tighten 11 case bolts.

Tightening Torque
(a): 18 N·m (1.8 kg-m, 13.0 lb-ft)

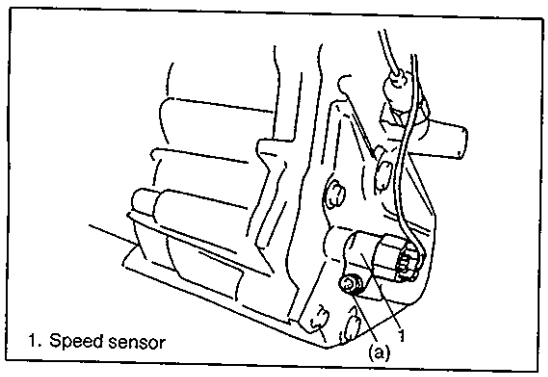

25) Install speed sensor.

Tightening Torque
(a): 10 N·m (1.0 kg-m, 7.5 lb-ft)

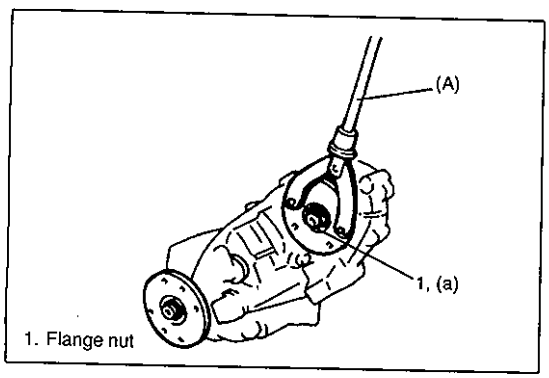

26) Install input flange, tighten flange nut and calk it.

Special Tool
(A): 09930-40113

Tightening Torque
(a): 130 N·m (13.0 kg-m, 94.0 lb-ft)

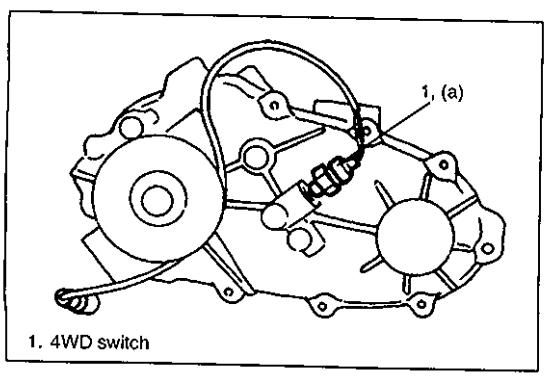

27) Install steel ball and 4WD switch.

Tightening Torque
(a): 19 N·m (1.9 kg-m, 14.0 lb-ft)

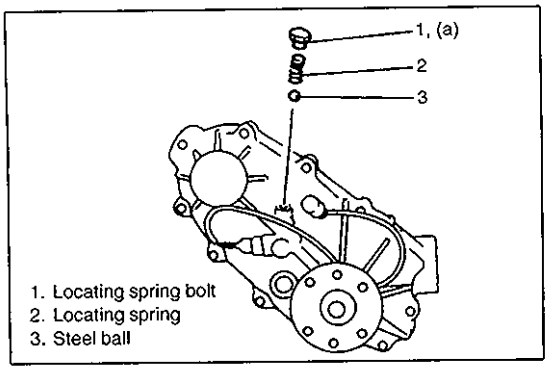

28) Install steel ball, locating spring and locating spring bolt.

Tightening Torque
(a): 25 N·m (2.5 kg-m, 18.0 lb-ft)

29) Install shift and select arm and fix it spring pin.

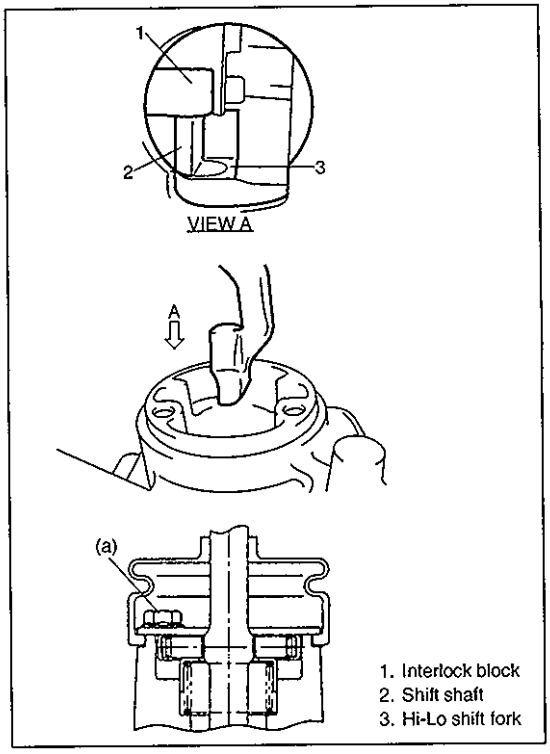

30) Set shift shaft, 2-4 shift fork and Hi-Lo shift fork position as shown in figure. (2H shift position).

31) Install transfer shift control lever through spring and cover and fit boot to front case after tightening bolts.

Tightening Torque
(a): 18 N·m (1.8 kg-m, 13.0 lb-ft)

TIGHTENING TORQUE SPECIFICATIONS

Fastening portion	Tightening Torque		
	N·m	kg-m	lb-ft
Oil filler/level and drain plug	23	2.3	17.0
Transfer mounting nut	30	3.0	22.0
Transfer mounting bracket bolt	23	2.3	17.0
Propeller shaft bolt	50	5.0	36.5
Flange nut	130	13.0	94.0
Lock up plate	28	2.8	20.5
Interlock bolt	23	2.3	17.0
Transfer case bolt	18	1.8	13.0
4WD switch	19	1.9	14.0
Locating spring bolt	25	2.5	18.0
Shift control lever bolt	18	1.8	13.0
Speed sensor bolt	10	1.0	7.5
Interlock block pin screw	25	2.5	18.0

REQUIRED SERVICE MATERIALS

MATERIAL	RECOMMENDED SUZUKI PRODUCT	USE
Lithium grease	SUZUKI SUPER GREASE A (99000-25010)	Oil seal lip
Sealant	SUZUKI BOND No. 1215 (99000-31110)	• Oil filler and level plug • Oil drain plug • Mating surface of front case

SPECIAL TOOLS

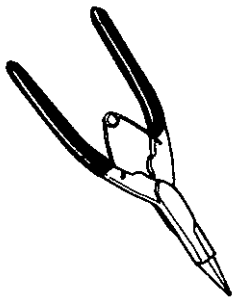 09900-06107 Snap ring plier (Opening type)	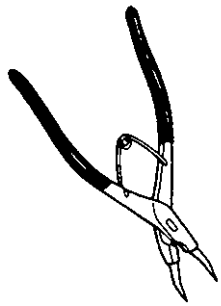 09900-06108 Snap ring plier (Closing type)	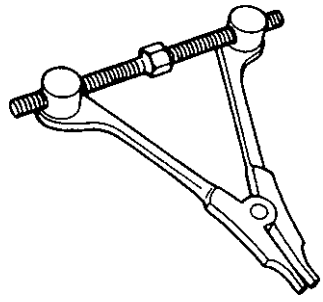 09912-34510 Separator	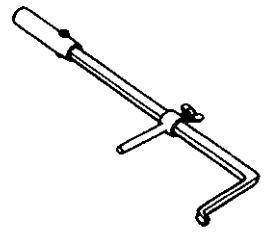 09913-50121 Oil seal remover
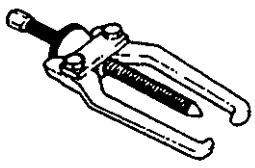 09913-65135 Bearing puller	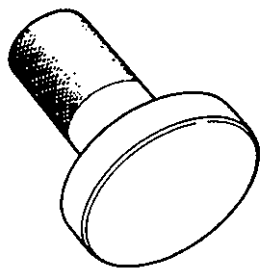 09913-75520 Bearing installer	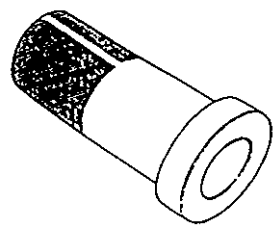 09913-75810 Bearing installer	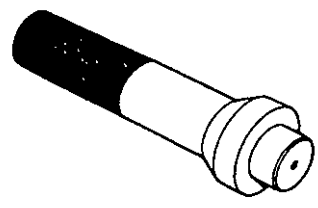 09913-75830 Bearing installer
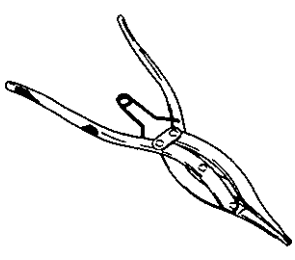 09920-76010 Snap ring plier (Opening type)	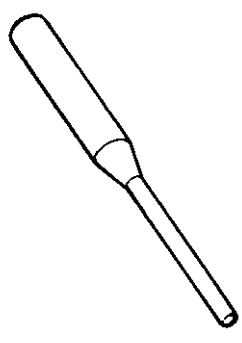 09922-85811 Pin remover	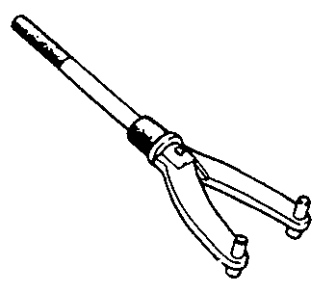 09930-40113 Flange holder	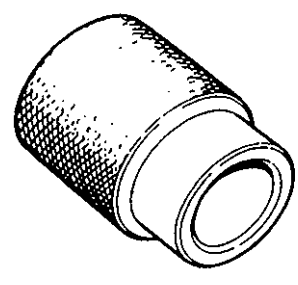 09940-53111 Differential side bearing installer
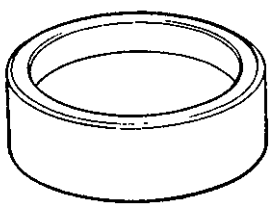 09944-66020 Bearing installer			

SECTION 7E

DIFFERENTIAL (FRONT AND REAR)

CONTENTS

GENERAL DESCRIPTION 7E- 1
DIAGNOSIS 7E- 3
ON-VEHICLE SERVICE 7E- 4
Maintenance Service 7E- 4
Removal 7E- 5
Disassembly 7E- 6
Inspection 7E-10
Adjustment and Reassembly 7E-11
Installation 7E-25
TIGHTENING TORQUE SPECIFICATIONS 7E-26
REQUIRED SERVICE MATERIALS 7E-27
SPECIAL TOOLS 7E-27

GENERAL DESCRIPTION

The differential assemblies using a hypoid bevel pinion and gear are installed to the front and rear axles.

Some of the components such as bevel gear and pinion set are not interchangeable between the front and rear differential assemblies.

The differential assembly is decisive in that the drive power is concentrated there. Therefore, use of genuine parts and specified torque is compulsory. Further, because of sliding tooth meshing with high pressure between bevel pinion and gear, it is mandatory to lubricate them by hypoid gear oil.

For Front Differential

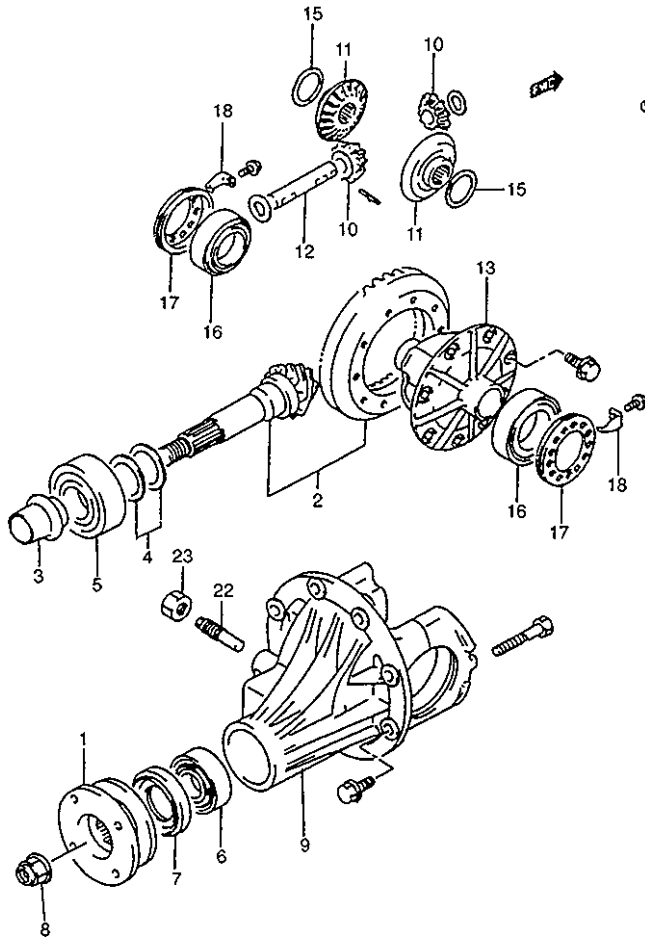

For Rear Differential

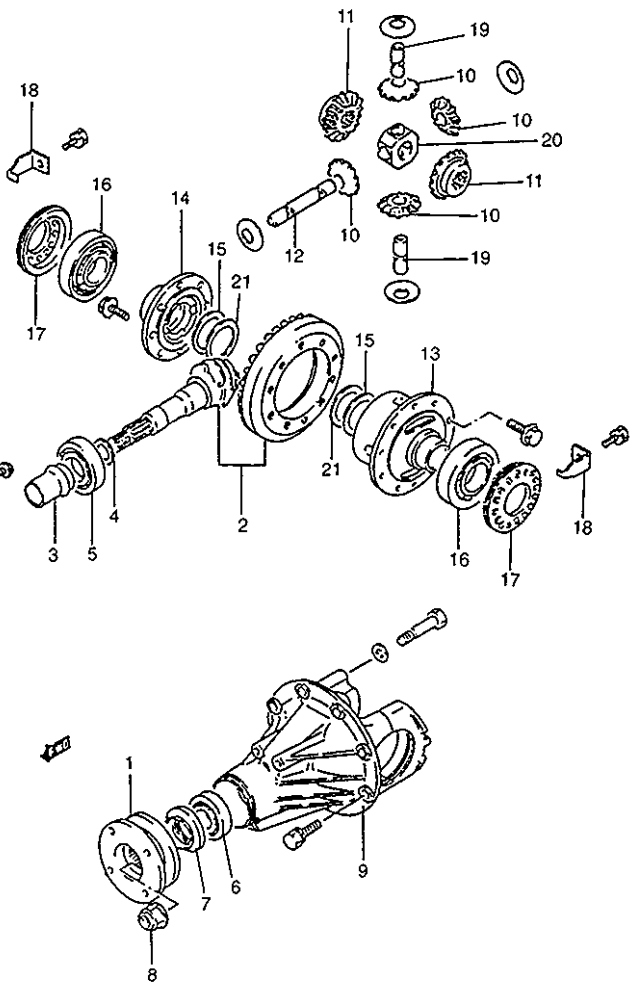

1. Universal joint flange
2. Bevel pinion gear set
3. Bevel pinion spacer
4. Shim
5. Rear bearing
6. Front bearing
7. Oil seal
8. Flange nut
9. Diff. carrier ass'y
10. Differential pinion
11. Differential gear
12. Pinion shaft No.1
13. Differential (left) case
14. Differential right case
15. Thrust washer
16. Differential side bearing
17. Bearing adjuster
18. Lock plate
19. Pinion shaft No.2
20. Pinion joint
21. Spring washer
22. Gear thrust bolt
23. Gear thrust nut

DIAGNOSIS

Condition	Possible Cause	Correction
Gear noise	• Deteriorated or water mixed lubricant	Repair and replenish
	• Inadequate or insufficient lubricant	Repair and replenish
	• Maladjusted backlash between bevel pinion and gear	Adjust as prescribed
	• Improper tooth contact in the mesh between bevel pinion and gear	Adjust or replace
	• Loose bevel gear securing bolts	Replace or retighten
	• Damaged side gear(s) or side pinion(s)	Replace
Bearing noise	• (Constant noise) Deteriorated or water mixed lubricant	Repair and replenish
	• (Constant noise) Inadequate or insufficient lubricant	Repair and replenish
	• (Noise while coasting) Damaged bearing(s) of bevel pinion	Replace
	• (Noise while turning) Damaged diff. side bearing(s) or axle bearing(s)	Replace
Oil leakage	• Clogged breather plug	Clean
	• Worn or damaged oil seal	Replace
	• Excessive oil	Adjust oil level
	• Loose differential carrier bolts	Replace or retighten

ON-VEHICLE SERVICE

MAINTENANCE SERVICE

Inspection

Inspect differential and differential housing for evidence of oil leakage.
Oil level is checked by means of its oil level plug. Refer to SECTION 0B for level inspection.

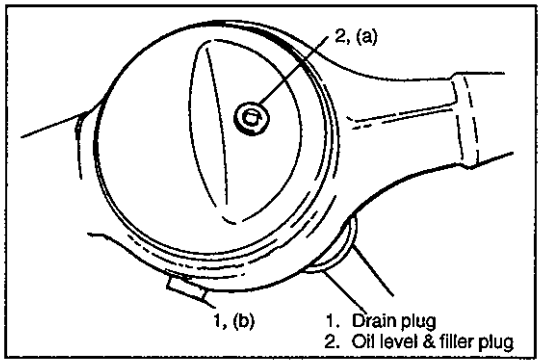

Oil Change

1) Remove oil drain plug and drain oil.
2) Reinstall drain plug and tighten it to specified tightening torque.
3) Remove oil level & filler plug and fill differential housing with new specified oil.

Differential oil specification
Hypoid gear oil API GL-5
SAE 80W-90 or 75W-85

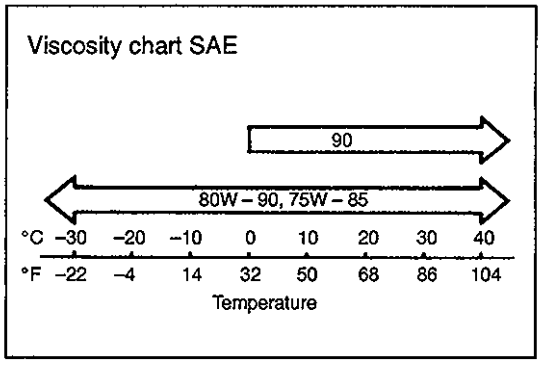

Oil capacity
Front: 1.35 liters (2.9/2.3 US/Imp pt.)
Rear: 1.5 liters (3.2/2.6 US/Imp pt.)

NOTE:
- **Hypoid gear oil must be used for differential.**
- **It is highly recommended to use SAE 80W-90 viscosity.**

4) Apply sealant to thread of drain and level/filler plugs (a) and (b) and torque plugs to specification.

Sealant 99000-31110

Tightening Torque
(a): 50 N·m (5.0 kg-m, 36.5 lb-ft)
(b): 27 N·m (2.7 kg-m, 19.5 lb-ft)

REMOVAL

FRONT DIFFERENTIAL

1) Lift up vehicle and drain oil from front differential housing.
2) Remove front axle shaft. (Refer to front axle shaft removal of SECTION 3D.)

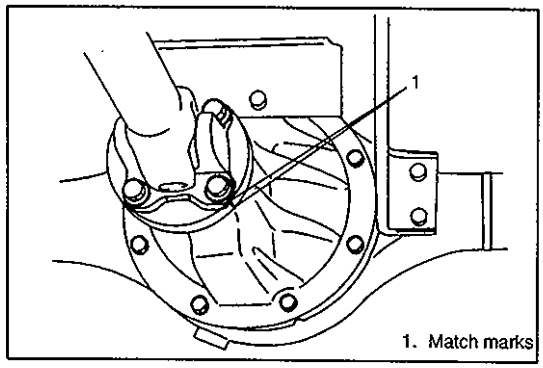

1. Match marks

3) Before removing propeller shaft, give match marks on joint flange and propeller shaft as shown.
4) Remove propeller shaft by removing its 4 flange bolts.

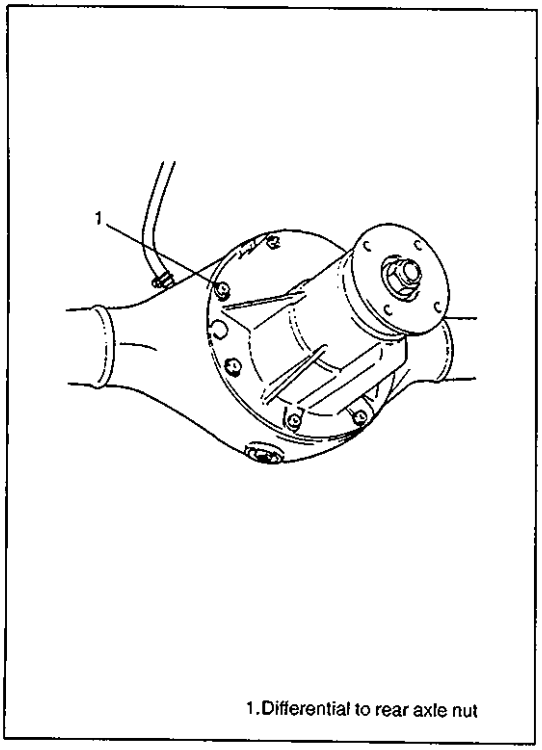

1.Differential to rear axle nut

5) Remove differential assembly by removing its 8 fastening bolts.

REAR DIFFERENTIAL

1) Lift up vehicle and drain oil from rear differential housing.
2) Remove rear brake drums and pull out right and left rear axle shafts. (Refer to rear axle shaft removal of SECTION 3E.)
3) Follow step 3) to 5) of FRONT DIFFERENTIAL REMOVAL described above.

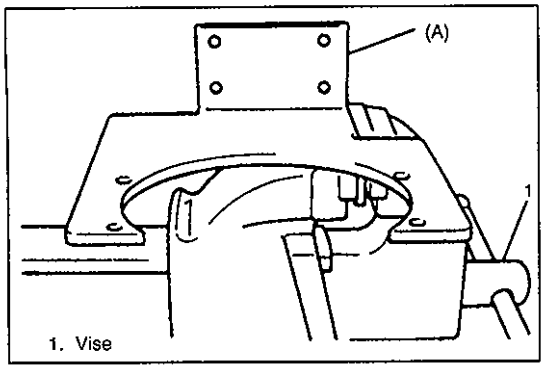

DISASSEMBLY

FRONT DIFFERENTIAL

1) Set special tool on vise securely.

Special Tool
(A): 09944-76010

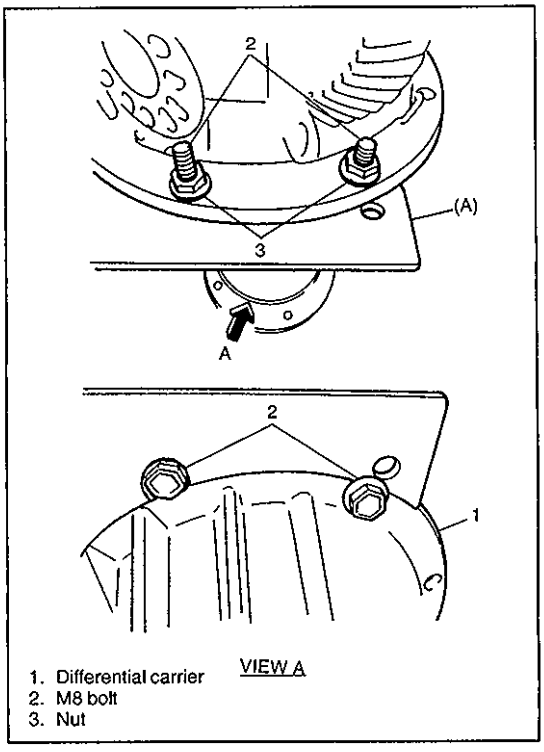

2) Using 2 bolt & nut sets (M8), set differential assembly onto differential carrier holder.

Special Tool
(A): 09944-76010

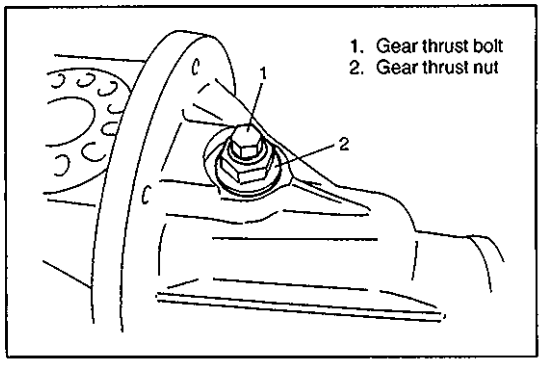

3) Remove gear thrust bolt and nut.

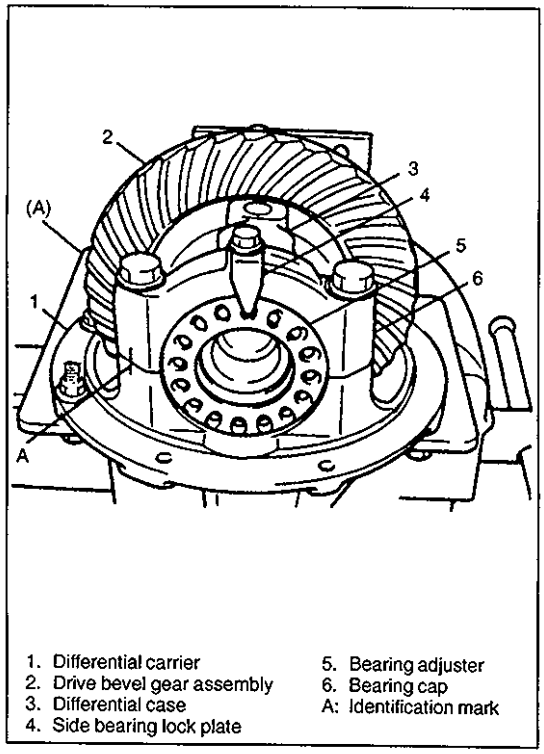

1. Differential carrier
2. Drive bevel gear assembly
3. Differential case
4. Side bearing lock plate
5. Bearing adjuster
6. Bearing cap
A: Identification mark

4) Put identification marks on differential side bearing caps.
5) Take off differential side bearing lock plates and differential side bearing caps removing their bolts and then take out bearing adjusters, side bearing outer races and drive bevel gear with differential case.

Special Tool
(A): 09944-76010

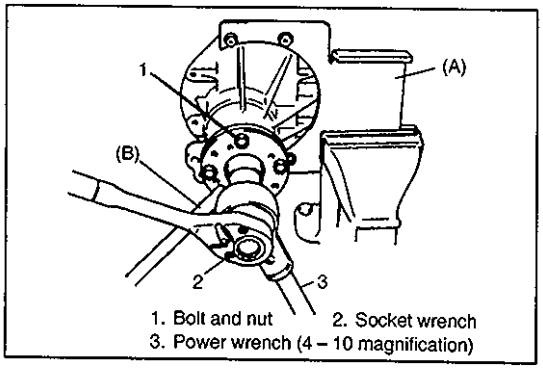

1. Bolt and nut
2. Socket wrench
3. Power wrench (4 – 10 magnification)

6) Turn differential assembly together with special tool (A) by 90 degrees and grip it with vise again.

Special Tool
(A): 09944-76010

7) Hold universal joint flange with special tool and then remove flange nut by using power wrench.

Special Tool
(B): 09922-66020

8) Make mating marks on drive bevel pinion and companion flange.

CAUTION:
Don't make mating mark on the coupling surface of the flange.

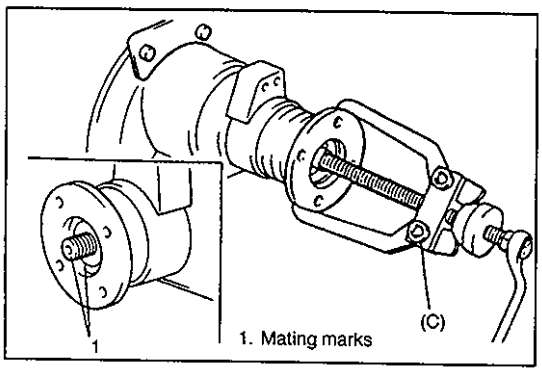

1. Mating marks

9) Remove companion flange from pinion. Use special tool if it is hard to remove.
Special Tool
(C): 09913-65135

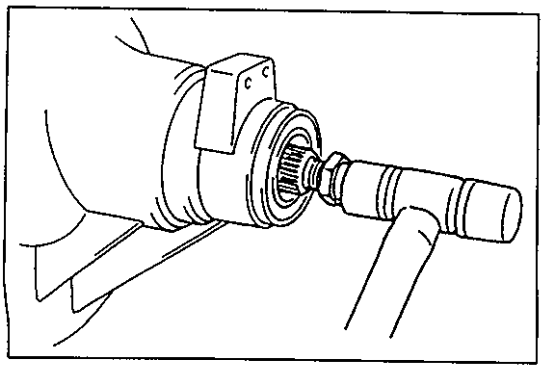

10) Remove bevel pinion with rear bearing, and spacer from carrier.
If it is hard to remove, screw an used nut into pinion and hammer on that nut with a plastic hammer but never directly on pinion.

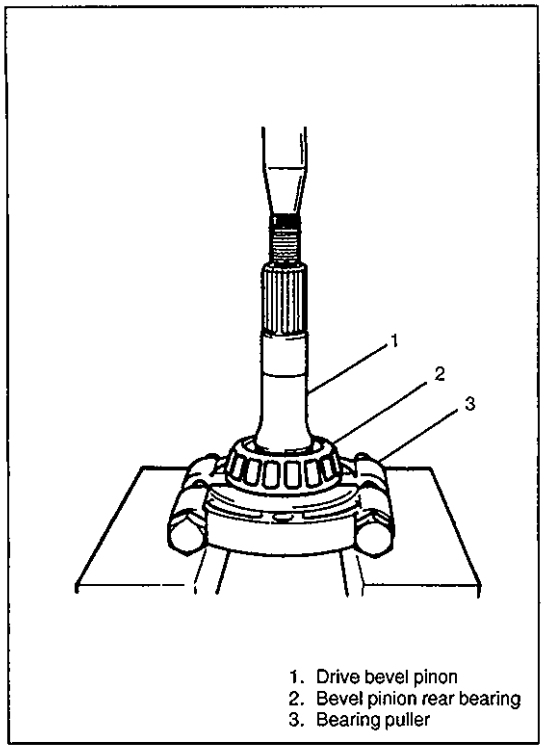

1. Drive bevel pinon
2. Bevel pinion rear bearing
3. Bearing puller

11) Remove bevel pinion rear bearing by using bearing puller and press.

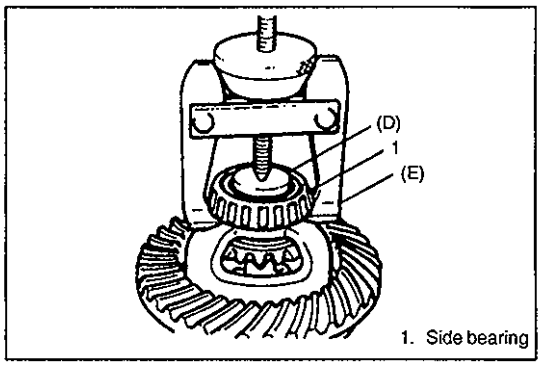

1. Side bearing

12) Using special tools, pull out differential side bearings.

Special Tool
(D): 09913-85230
(E): 09913-61510

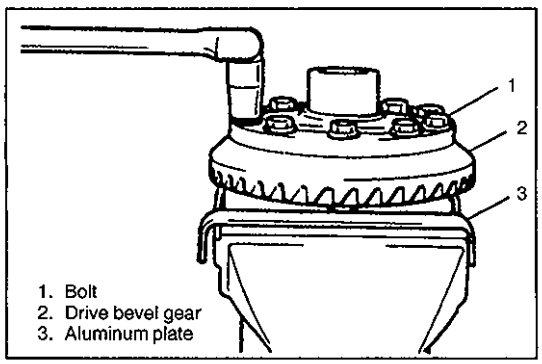

1. Bolt
2. Drive bevel gear
3. Aluminum plate

13) With aluminum plates placed on vise first, grip differential case with it and remove bevel gear by removing its 10 bolts.

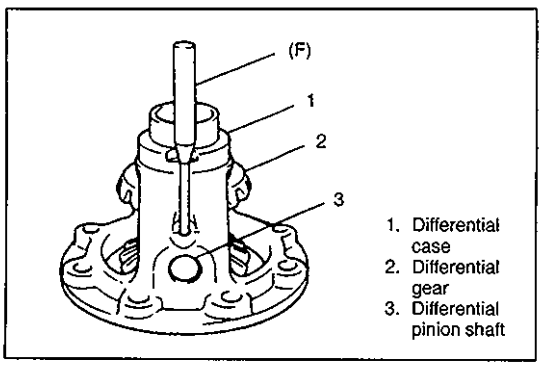

1. Differential case
2. Differential gear
3. Differential pinion shaft

14) Drive out spring pin with special tool and hammer and disassemble differential side gears, pinions, washers and shaft in differential case.

Special Tool
(F): 09922-85811

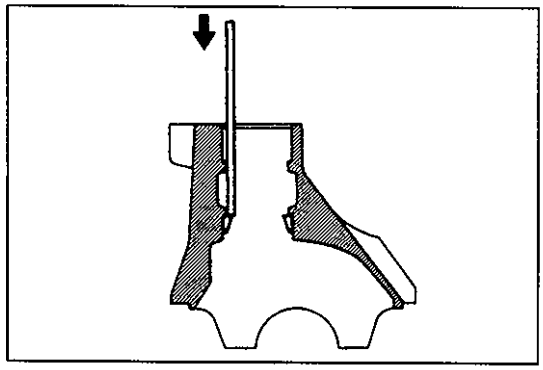

15) Drive out bevel pinion bearing outer races in differential carrier by hammering metal stick applied to them.

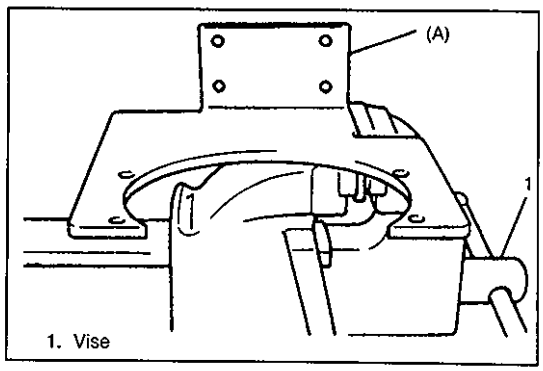

REAR DIFFERENTIAL

1) Set special tool on vise securely.

Special Tool
(A): 09944-76010

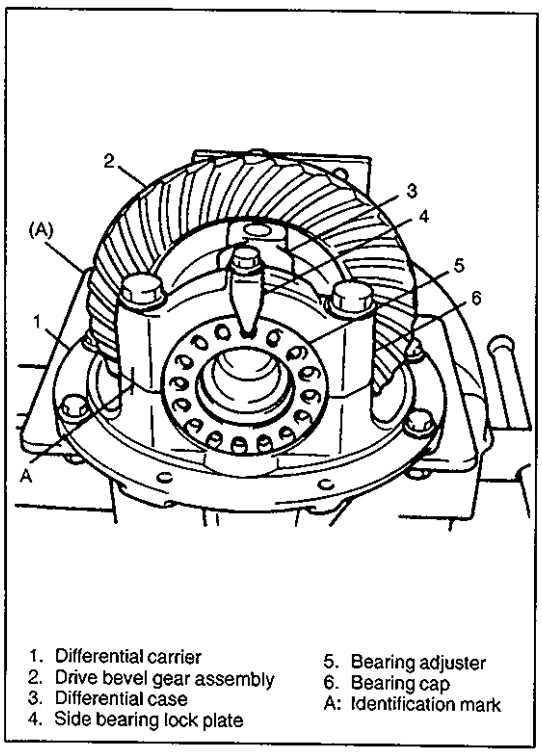

2) Using bolt & nut sets, set differential assembly onto differential carrier holder.
3) Put identification marks on differential side bearing caps.
4) Take off differential side bearing lock plates and differential side bearing caps removing their bolts and then take out bearing adjusters, side bearing outer races and drive bevel gear with differential case.

Special Tool
(A): 09944-76010

For complete disassembly procedure, follow steps 6) to 11) of FRONT DIFFERENTIAL DISASSEMBLY previously described in this section.

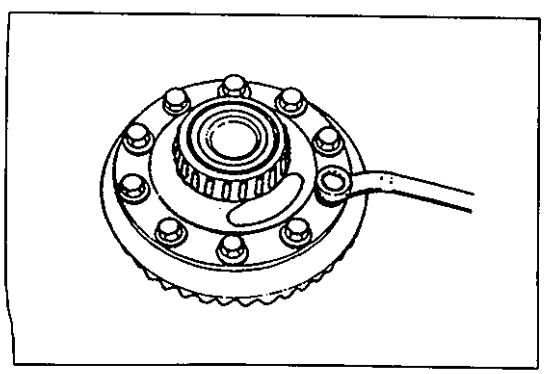

5) Remove 10 bolts securing bevel gear to differential case, and separate gear from case.

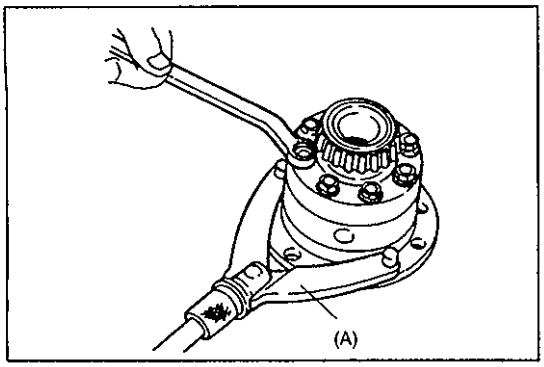

6) There are 8 bolts fastening two differential case halves together. Remove these bolts to sever right-hand case half from left-hand one, and take off right-hand one.

Special Tool
(A): 09930-40113

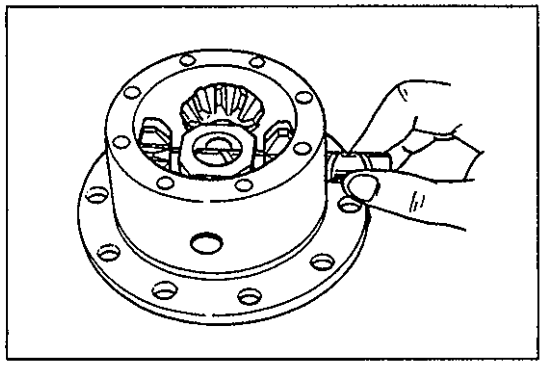

7) Remove side gears, differential pinions and thrust washers.

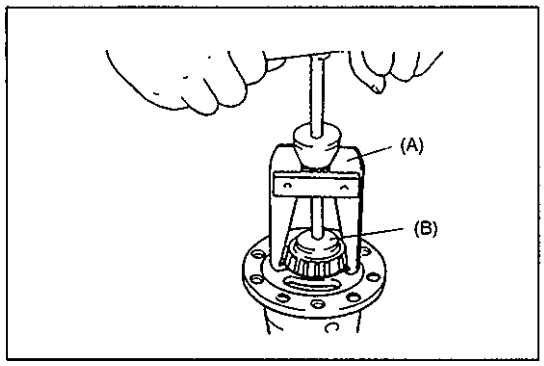

8) Using special tools, extract side bearing from each differential case half.

Special Tool
(A): 09913-60910
(B): 09913-85230

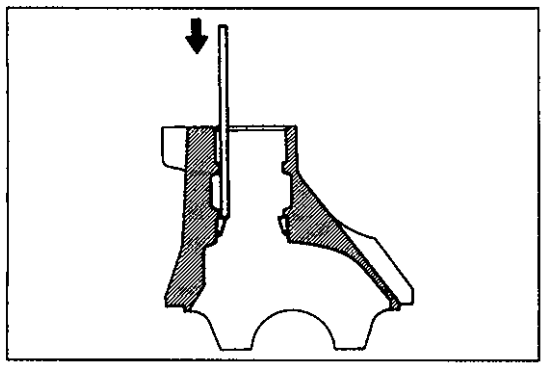

9) Drive out bevel pinion bearing outer races in differential carrier by hammering metal stick applied to them.

INSPECTION

- Check companion flange for wear or damage.
- Check bearings for wear or discoloration.
- Check differential carrier for cracks.
- Check drive bevel pinion and bevel gear for wear or cracks.
- Check side gears, pinion gears and pinion shaft for wear or damage.
- Check side gear spline for wear or damage.

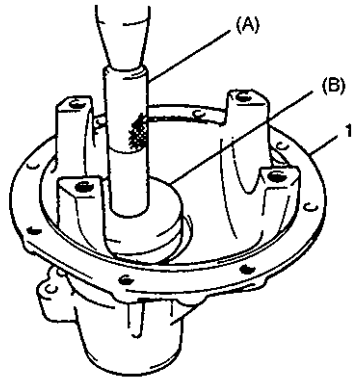

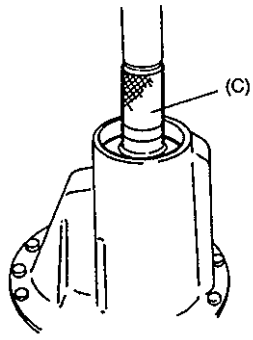

1. Differential carrier

ADJUSTMENT AND REASSEMBLY

Judging from faulty conditions noted before disassembly and what is found through visual check of bearing and gear tooth etc. after disassembly, prepare replacing parts and proceed to reassembly according to procedures as described below.

CAUTION:
- **Bevel gear and pinion must be replaced as a set when either replacement becomes necessary.**
- **When replacing taper roller bearing, replace as inner race & outer race assembly.**

DIFFERENTIAL CARRIER

For press-fitting bevel pinion bearing outer races, use special tools as shown.

CAUTION:
Perform press-fitting carefully so as not to tilt outer race.

Special Tool
For front differential
(A): 09913-75510
(C): 09913-75520
For rear differential
(A): 09924-74510
(B): 09926-68310
(C): 09913-75510

Left side

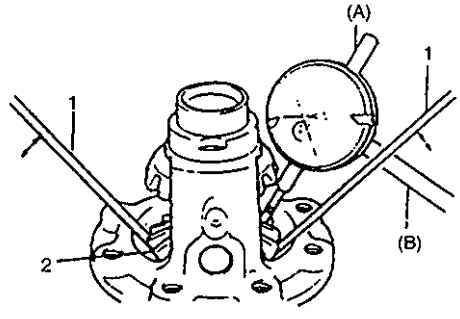

1. Screwdriver
2. Differential gear

DIFFERENTIAL CASE

For Front Differential

Judging from abnormality noted before disassembly and what is found through visual check of component parts after disassembly, prepare replacing parts and proceed to reassembly. Make sure that all parts are clean.

1) Assemble differential gear and measure thrust play of differential gear as follows.

Special Tool
(A): 09900-20606
(B): 09900-20701

Diff. gear thrust play: 0.12–0.37 mm (0.005–0.014 in.)

Left side
- Hold differential assembly with soft jawed vise and apply measuring tip of dial gauge to top surface of gear.
- Using 2 screwdrivers, move gear up and down and read movement of dial gauge pointer.

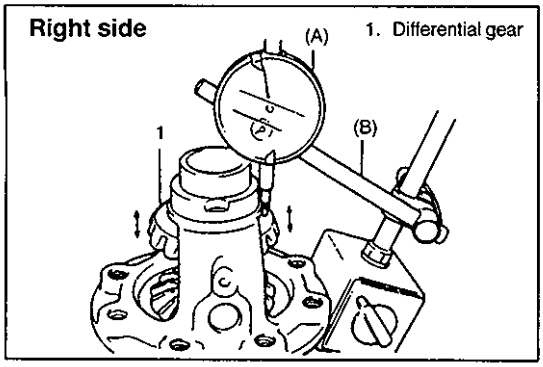

Right side

- Using similar procedure to the above, set dial gauge tip to gear shoulder.
- Move gear up and down by hand and read dial gauge.

2) If thrust play is out of specification, select suitable thrust washer from among following available size, install it and check again that specified gear play is obtained.

Available thrust washer thickness	0.9, 1.0, 1.1, and 1.2 mm (0.035, 0.039, 0.043, and 0.047 in.)

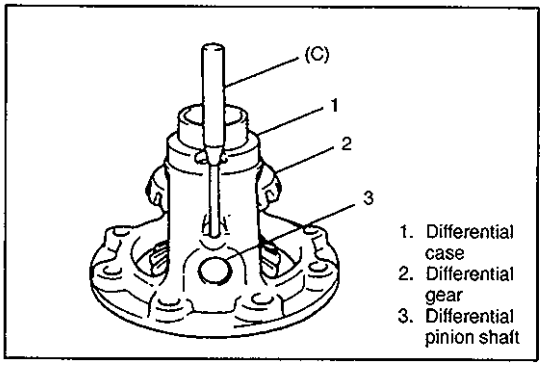

3) Drive in spring pin for differential side pinion shaft till it is flush with differential case surface.

Special Tool
(C): 09922-85811

Continued on item For Front & Rear Differential below.

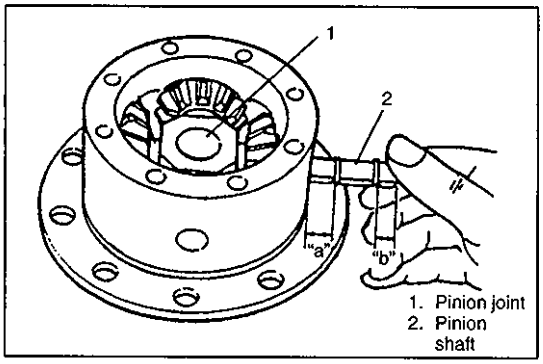

For Rear Differential

1) When installing pinion shaft (shorter) into differential case and pinion, insert its "a" side into pinion joint.

NOTE:
"a" is longer than "b". ("a" >"b")

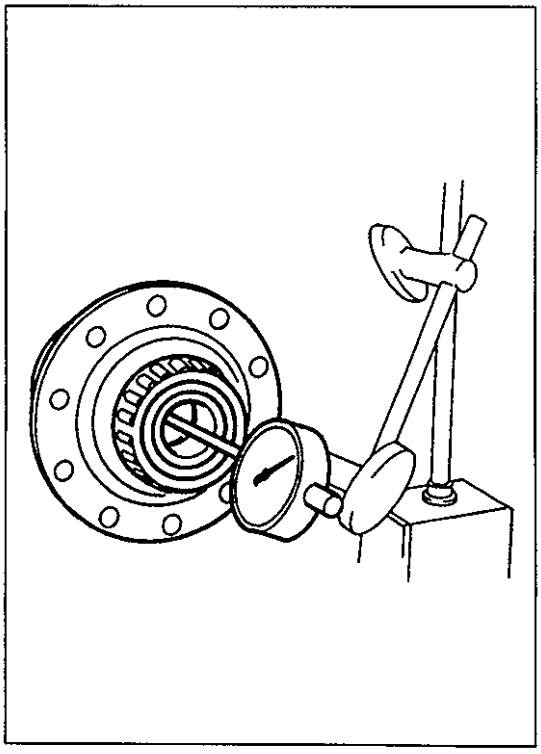

2) To check thrust play, assemble differential gearing and case, as shown in figure, fastening together two case halves by tightening securing bolts to prescribed torque. By comparing thrust play reading, taken as shown in figure, against thrust play indicated below, increase or decrease total thickness of thrust washers, which are located in two places, that is, on the inner side of each case half.

Tightening Torque for differential case bolt:
41 N·m (4.1 kg-m, 30.0 lb-ft)

Side gear thrust play specification	0.12–0.37 mm (0.005–0.014 in.)

Available thrust washer sizes (thickness)	0.6, 0.7 & 0.8 mm (0.024, 0.028 & 0.032 in)

Continued on item For Front & Rear Differential below.

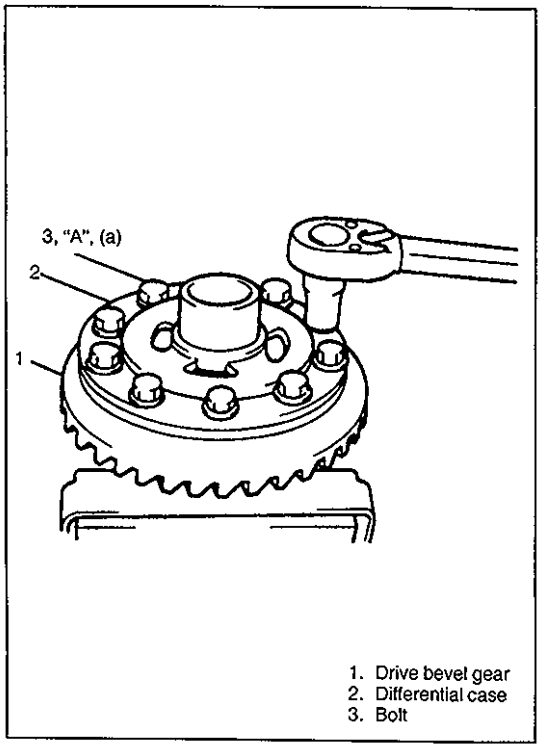

1. Drive bevel gear
2. Differential case
3. Bolt

For Front & Rear Differential

1) Put bevel gear on differential case and fasten them with 10 bolts by tightening them to specified torque.
Use thread lock cement for 10 bolts.

CAUTION:
Use of any other bolts than that specified is prohibited.

"A": Thread lock cement 99000-32020

Tightening Torque
(a): 85 N·m (8.5 kg-m, 61.5 lb-ft)

For Front Diff.

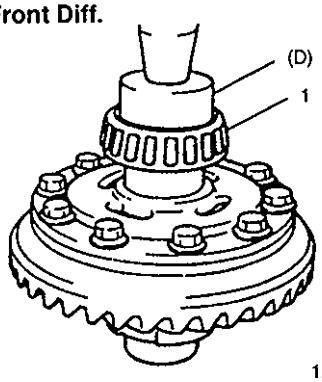

1. Side bearing

For Rear Diff.

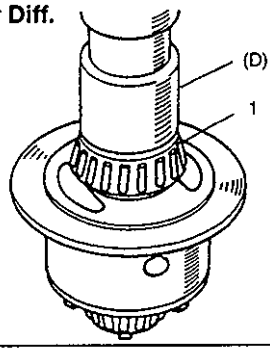

2) Press-fit these bearings into differential case by using special tool. Driving the bearing into case is not permitted.

Special Tool
(D): 09944-66020 (Front differential)
09940-53111 (Rear differential)

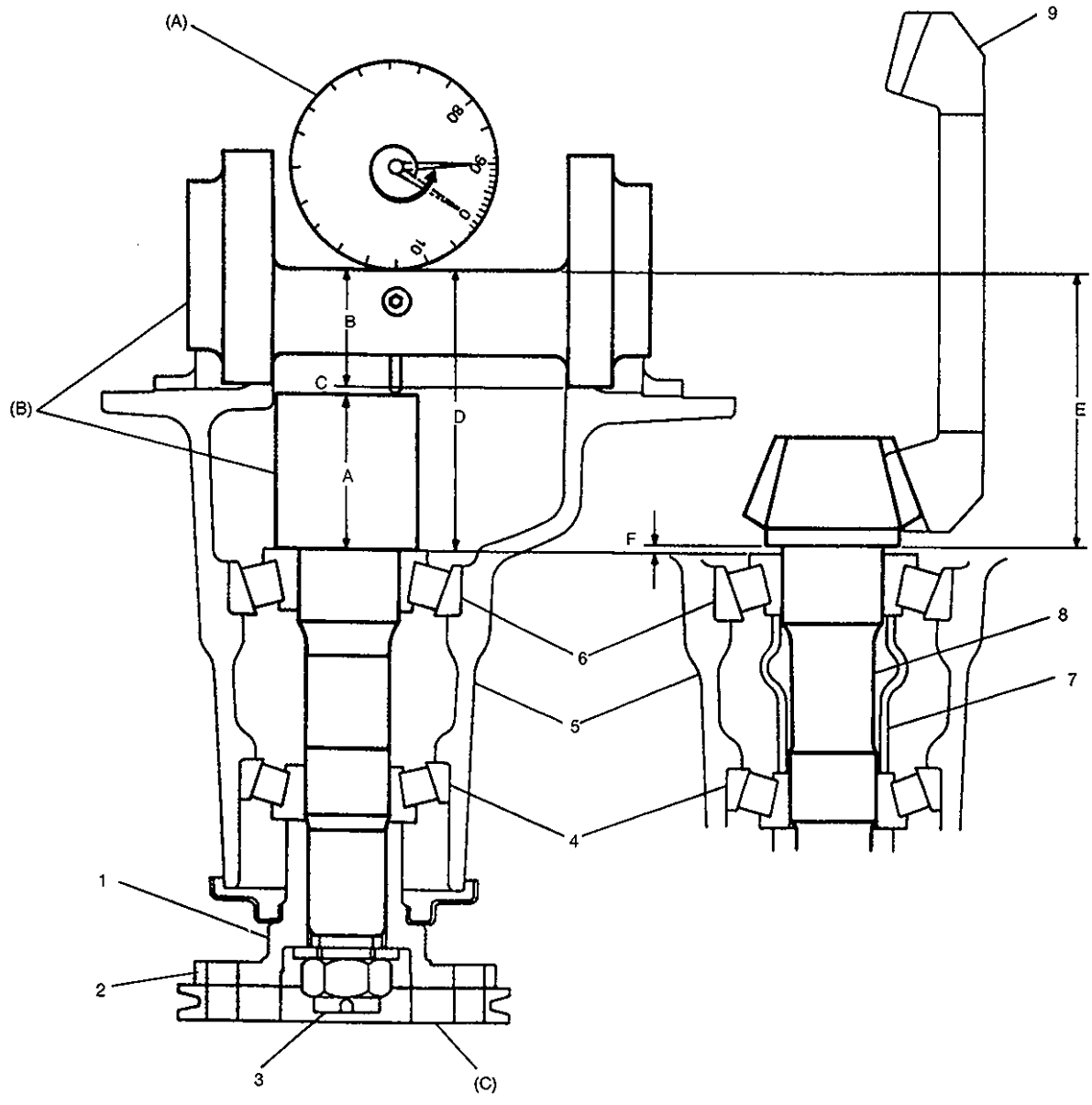

A: Pinion dummy height
B: Axle dummy radius
A + B: Mounting dummy size
For front differential 85.00 mm/3.34645 in.
For rear differential 94.00 mm/3.70078 in.
C: Measured dimension
D: Differential carrier mounting distance (A + B + C)
E: Bevel pinion mounting distance
(Marked in shaft in mm)
F: Shim size for mounting distance adjustment
(D–E)

1. Universal joint flange without groove
(P/No. 27110 – 60A00)
2. No groove on flange periphery
3. Nut
4. Front bearing
5. Differential carrier
6. Rear bearing
7. Spacer
8. Bevel pinion
9. Bevel gear

Special Tool
(A): 09900-20606
(B): 09924-36320 (Front Differential)
09926-78311 (Rear Differential)
(C): 09922-75222

DRIVE BEVEL PINION

To engage bevel pinion and gear correctly, it is prerequired to install bevel pinion to differential carrier properly by using adjusting shim as described on following pages. Shown in above page are relative positions of bevel pinion, differential carrier and mounting dummy.

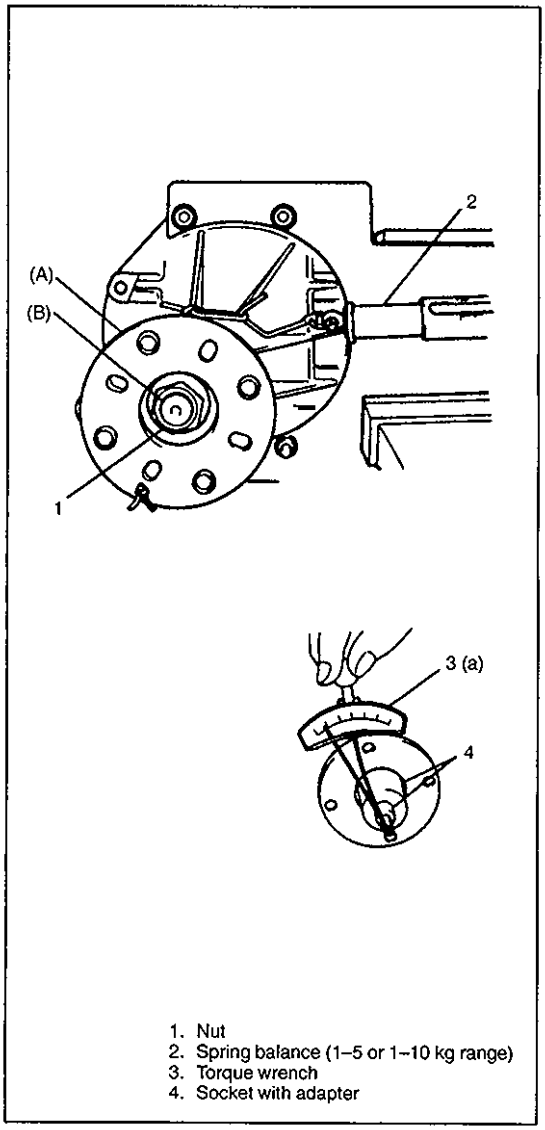

1. Nut
2. Spring balance (1–5 or 1–10 kg range)
3. Torque wrench
4. Socket with adapter

1) Install bevel pinion dummy with bearings into differential carrier and tighten flange nut so that specified bearing preload is obtained.

NOTE:

- **This installation requires universal joint flange not equipped with groove on flange periphery.**
- **This installation requires no spacer or oil seal.**
- **Before taking measurement with spring balance or torque wrench, check for rotation by hand and apply small amount of oil to bearings.**

Special Tool
(A): 09922-75222
(B): 09924-36320 (Front differential)
09926-78311 (Rear differential)
Pinion bearing preload
(a): Front differential
5.0–13.0 kg-cm (4.4–11.2 lb-in)
Rear differential
9.0–17.0 kg-cm (7.8–14.7 lb-in)

Spring balance reading
Front differential
1.0–2.6 kg-cm (2.3–5.7 lb)
Rear differential
1.8–3.4 kg (4.0–7.5 lb)

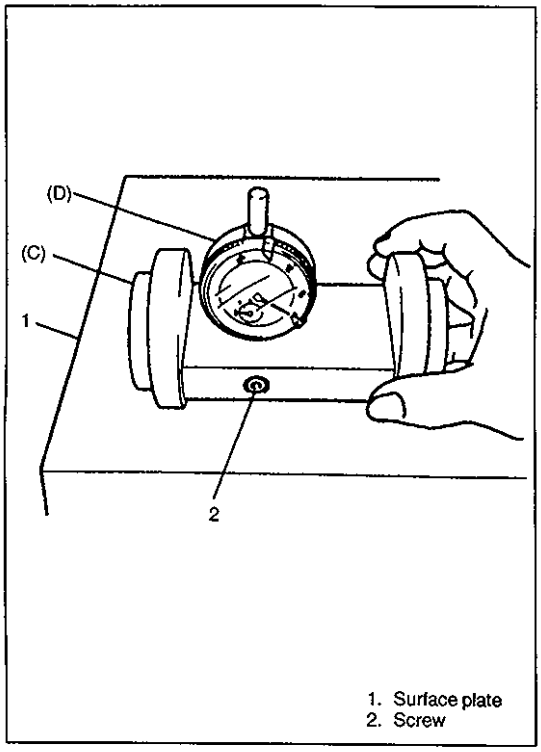

1. Surface plate
2. Screw

2) Set dial gauge to bevel pinion mounting dummy and make 0 (zero) adjustment on surface plate.

NOTE:

- **When setting dial gauge to mounting dummy, tighten screw lightly. Be careful not to overtighten it, which will cause damage to dial gauge.**
- **With dial gauge set, turn dummy back and force by hand a couple of times and attain accurate 0 (zero) adjustment.**
- **It is desirable that short pointer indicates beyond 2 mm when long one is at 0 (zero).**

Special Tool
(C): 09924-36320 (Front differential)
09926-78311 (Rear differential)
(D): 09900-20606

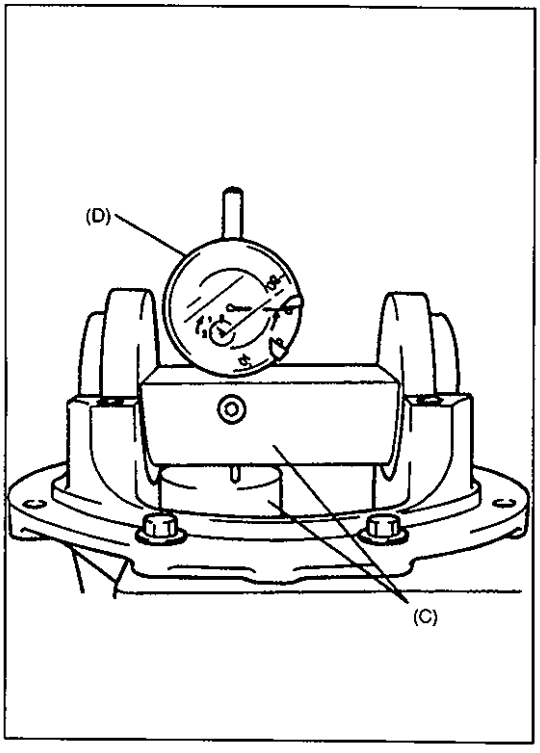

3) Place zero-adjusted mounting dummy and dial gauge set on pinion dummy and take measurement between zero position and extended dial gauge measuring tip.

NOTE:

- **Repeat turning back and force of dummy and measure distance as far as top surface of pinion dummy accurately.**
- **When dial gauge measuring tip extends from 0 (zero) position, pointer turns counterclockwise.**
- **Measured value may exceed 1 mm. Therefore, it is also necessary to know reading of short pointer.**

Special Tool
(C): 09924-36320 (Front differential)
09926-78311 (Rear differential)
(D): 09900-20606

4) Obtain adjusting shim thickness by using measured value by dial gauge (which represents C) in following equation.

Necessary shim thickness (F)	= 85 or 94 +	Dial gauge measured value (C)	−	measurement printed on pinion (E)

85 or 94 in above equation is A + B of mounting dummy (special tool) as shown in P.7E-15.

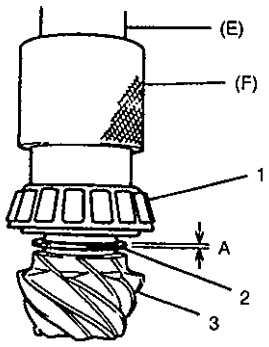

1. Rear bearing
2. Adjusting shim
3. Bevel pinion
A: Closest value to F (calculated)

5) Select adjusting shim(s) closest to calculated value from among following available sizes and put it in place and then press-fit rear bearing.

Special Tool
(E): 09925-18010
(F): 09940-53111
(Not use for front differential)

Available shim thickness	For Front Diff.	0.05, 0.1, 0.2 and 0.3 mm (0.002, 0.004, 0.008 and 0.012 in)
	For Rear Diff.	1.12, 1.15, 1.18, 1.21, 1.24, 1.27, 1.30 and 0.3 mm (0.044, 0.045, 0.046, 0.047, 0.048, 0.050, 0.051 and 0.012 in.)

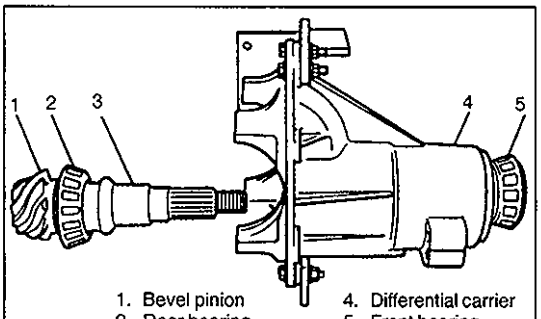

1. Bevel pinion
2. Rear bearing
3. Spacer
4. Differential carrier
5. Front bearing

6) With new pinion spacer inserted as shown, install front bearing to differential carrier.

NOTE:
- **Make sure to use new spacer for reinstallation.**
- **Apply oil to bearings.**

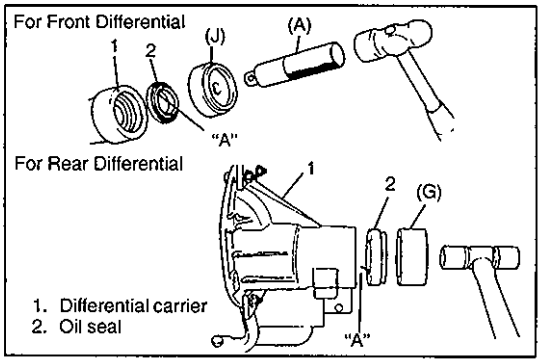

1. Differential carrier
2. Oil seal

7) Using special tool and plastic hammer, drive oil seal into differential carrier till it becomes flush with carrier end. Then apply grease to oil seal lip.

Special Tool
Front differential
(A): 09924-74510
(J): 09951-16090
Rear differential
(G): 09951-18210

"A": Grease 99000-25010

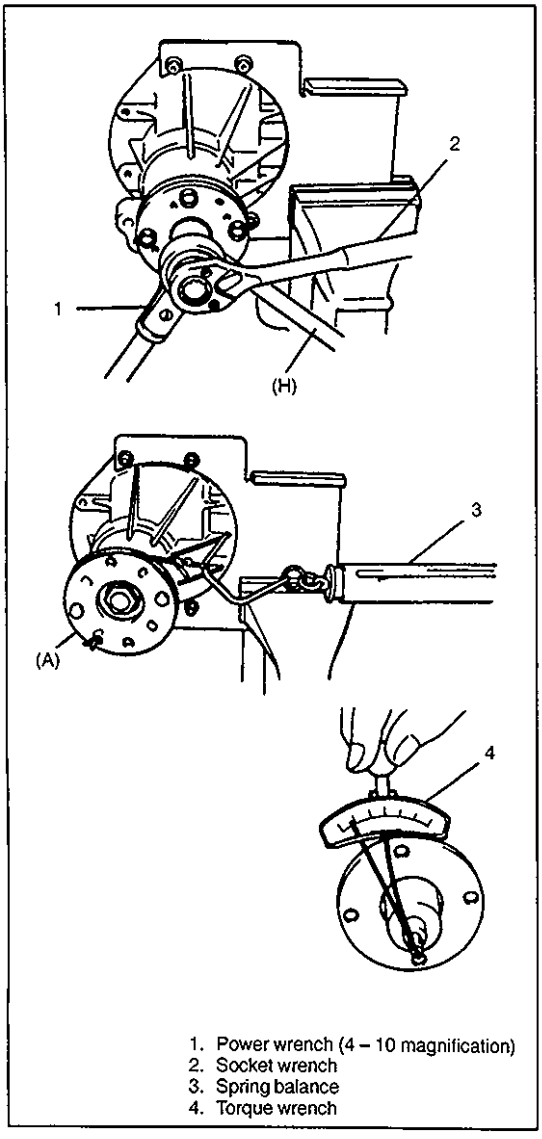

1. Power wrench (4 – 10 magnification)
2. Socket wrench
3. Spring balance
4. Torque wrench

8) While tightening flange nut gradually with flange holder (special tool) and power wrench, set preload of pinion to specification.

NOTE:

- **Before taking measurement with spring balance or torque wrench, check for smooth rotation by hand.**
- **Bevel pinion bearing preload is adjusted by tightening bevel pinion nut to crush spacer.**
  Therefore, be sure to use a new spacer for adjustment and tighten pinion nut step by step and check for starting torque (preload) as often as tightening to prevent over crushing of spacer.
  If exceeds specification given below during adjustment, replace spacer and repeat preload adjustment procedure.
  Attempt to decrease starting torque (preload) by loosening pinion nut will not do.

Pinion bearing preload:	**Front differential**
	5.0–13.0 kg-cm (4.4–11.2 lb-in.)
	Rear differential
	9.0–17.0 kg-cm (7.8–14.7 lb-in.)
Spring balance reading:	**Front differential**
	1.0–2.6 kg (2.3–5.7 lb)
	Rear differential
	1.8–3.4 kg (4.0–7.5 lb)

Special Tool
(A): 09922-75222
(H): 09922-66020

ASSEMBLING UNIT

1) Place bearing outer races on their respective bearings.
   Used left and right outer races are not interchangeable.
2) Install case assembly in carrier.
3) Install side bearing adjusters on their respective carrier, making sure adjuster are threaded properly.

NOTE:
Screw in each adjuster till it contacts bearing outer race so that outer race is prevented from inclining.

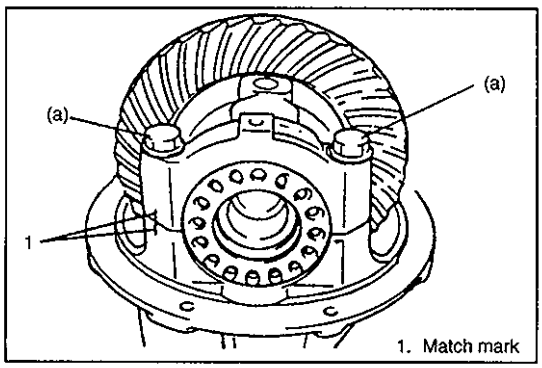

4) Align match marks on cap and carrier. Screw in two side bearing cap bolts two or three turns and press down bearing cap by hand.
   NOTE:
   If bearing cap does not fit tightly on carrier, side bearing adjuster is not threaded properly. Reinstall adjuster.
   Tighten cap bolts.
   Provisional Tightening Torque
   (a): 15 N·m (1.5 kg-m, 11.0 lb-ft)

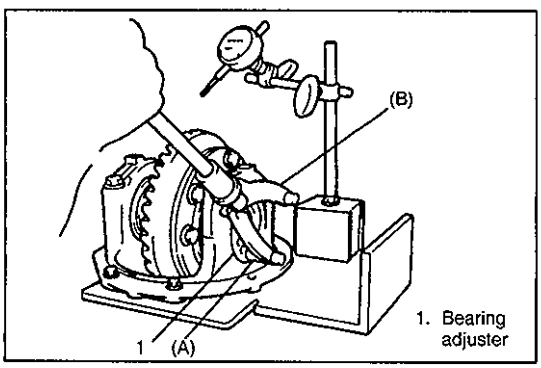

5) Tighten both bearing adjusters so as to obtain specified gear backlash and at the same time, obtain preload of side bearing.
   Special Tool
   (A): 09930-40120 (Attachment)
   (B): 09930-40113 (Rotor holder)
   Bevel gear backlash: Front differential
   0.10–0.20 mm (0.0039–0.0078 in.)
   Rear differential
   0.10–0.20 mm (0.0039–0.0078 in.)

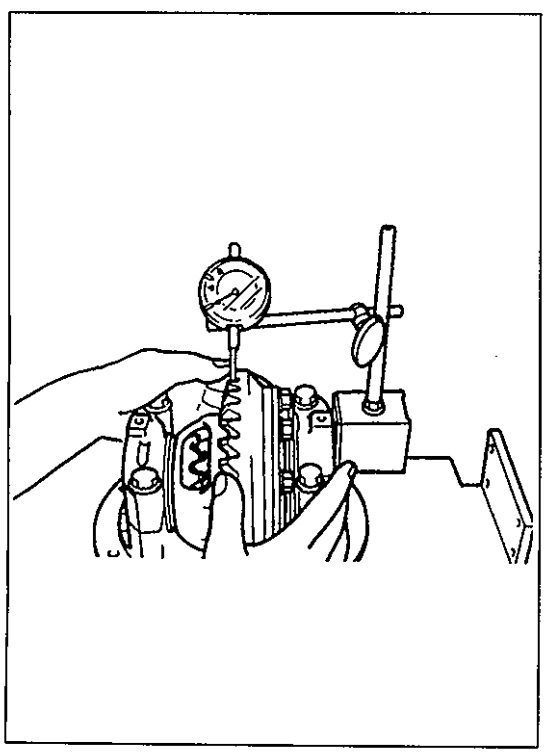

NOTE:
- **Be sure to apply measuring tip of dial gauge at right angles to convex side (drive side) of tooth.**
- **Measure at least 4 points on drive bevel gear periphery.**
- **As a practical measure following would be recommended to obtain specified backlash and side bearing preload at the same time.**
  1) **To increase or decrease backlash for adjustment, displace bevel gear toward or away from pinion by running in one adjuster and running out the other adjuster by equal amount.**
  2) **Tighten both adjusters further by one notch at a time.**

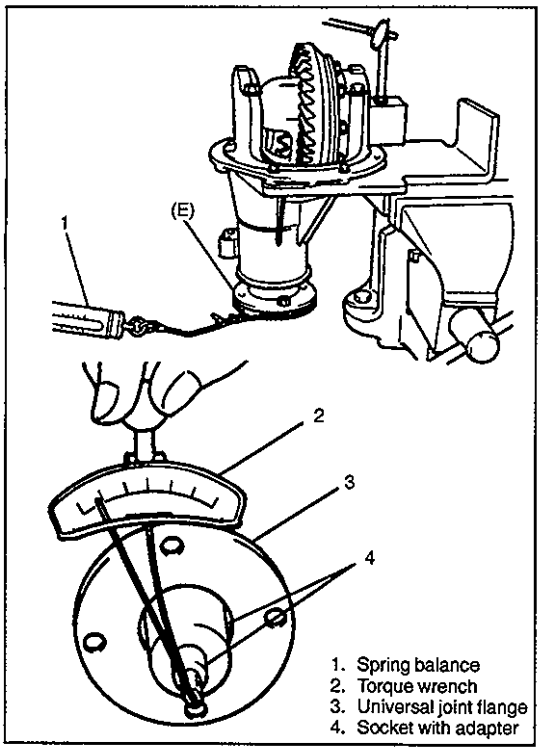

6) Measure preload of pinion with spring balance or torque wrench and check composite preload of pinion bearing and side bearing.

Special Tool
(E): 09922-75222

NOTE:
Standard preload is within the range given in graph on next page, which should be read as follows.

Example (front differential):
When preload of bevel pinion is 2.6 kg/5.73 lb, acceptable composite preload of both pinion bearings and side bearings should be between 2.8 and 3.2 kg/6.17 and 7.05 lb.

For Front Differential

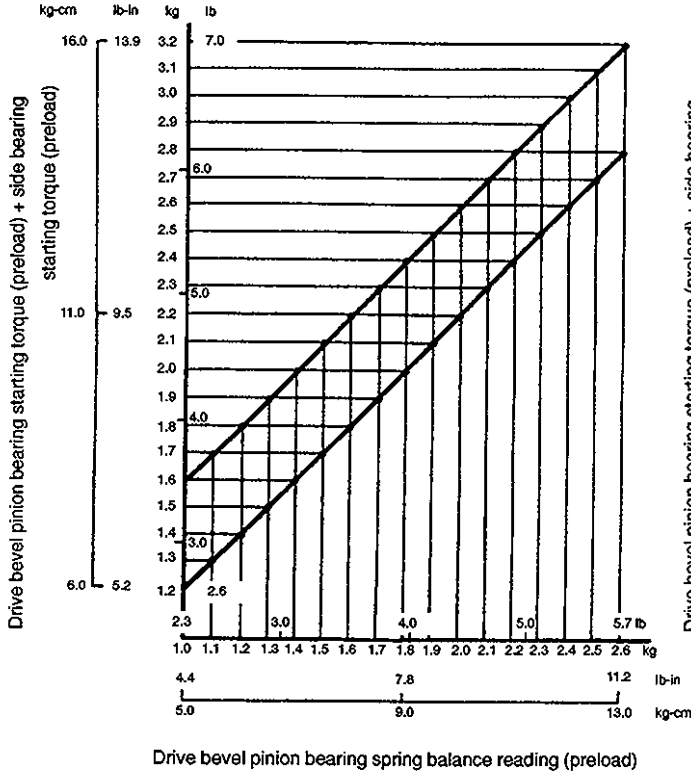

For Rear Differential

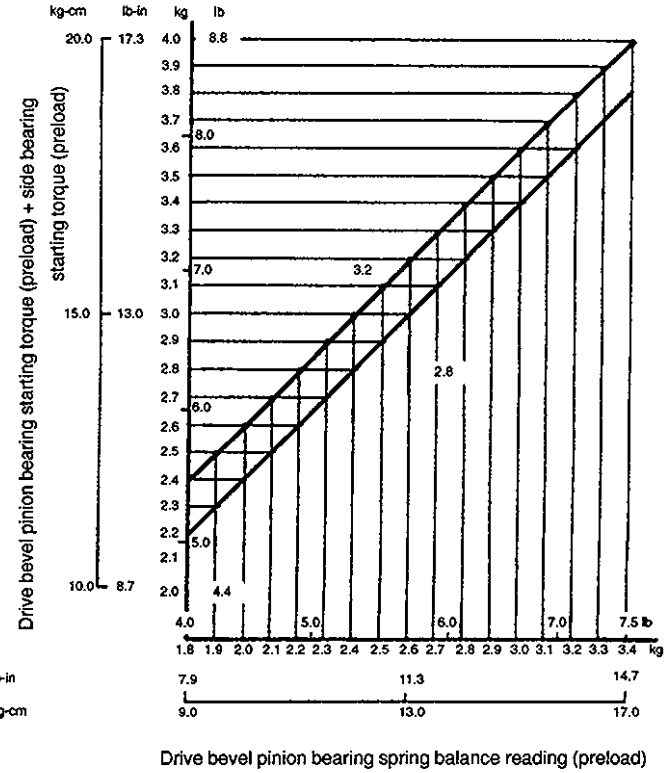

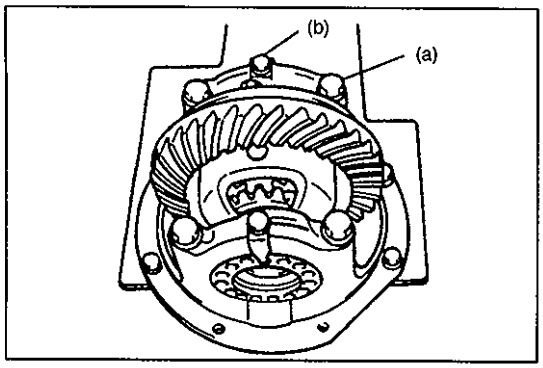

7) Torque bearing cap bolts to specification and install bearing lock plates.

Tightening Torque
(a): Front differential 50 N·m (5.0 kg-m, 36.5 lb-ft)
Rear differential 85 N·m (8.5 kg-m, 61.5 lb-ft)
(b): 11.5 N·m (1.15 kg-m, 8.5 lb-ft)

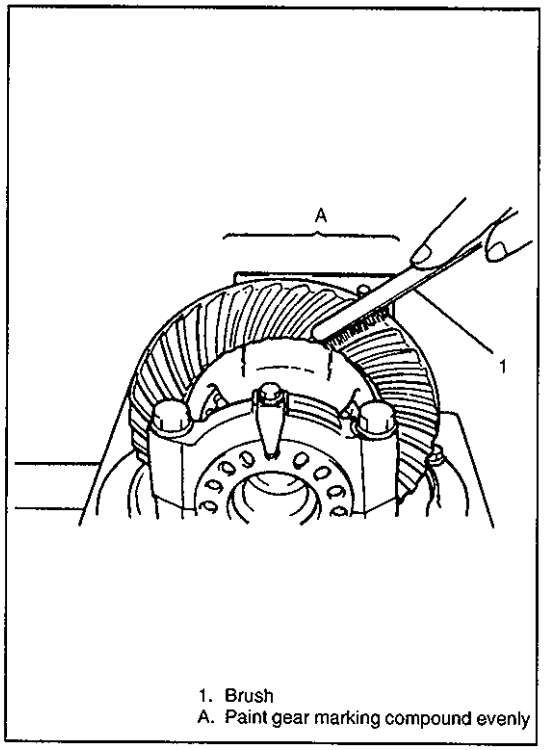

1. Brush
A. Paint gear marking compound evenly

8) As final step, check gear tooth contact as follows.
(1) After cleaning tooth surface of 10 bevel gears, paint them with gear marking compound evenly by using brush or sponge etc.

CAUTION:
When applying red lead paste to teeth, be sure to paint tooth surfaces uniformly. The paste must not be too dry or too fluid.

(2) Turn gear to bring its painted part in mesh with bevel pinion and turn it back and forth by hand to repeat their contact.
(3) Bring painted part up and check contact pattern, referring to following chart (next page). If contact pattern is not normal, readjust or replace as necessary according to instruction in chart.

NOTE:
Be careful not to turn bevel gear more than one full revolution, for it will hinder accurate check.

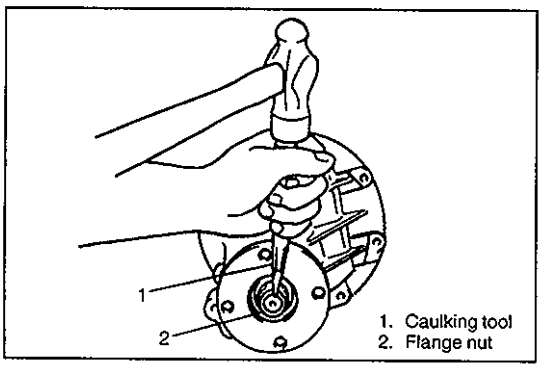

1. Caulking tool
2. Flange nut

9) Upon completion of gear tooth contact check in step 8, caulk flange nut with caulking tool and hammer.

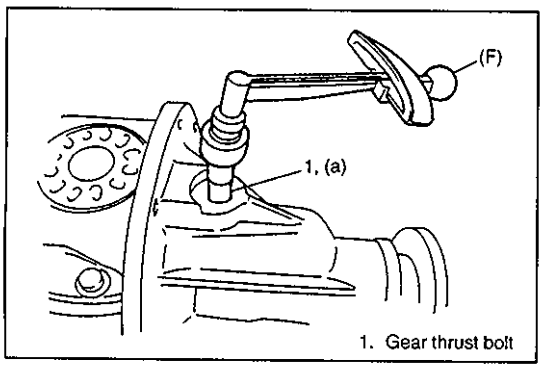

1. Gear thrust bolt

[For front differential]
10) Screw in gear thrust bolt and tighten it to specification.
Tightening Torque of Gear Thrust Bolt:
(a): 1.5 N·m (0.15 kg-m, 1.1 lb-ft)
Special Tool
(F): 09900-21107
11) Loosen gear thrust bolt by 180° degrees.
NOTE:
Be careful not to turn gear thrust bolt after loosening it in step11).

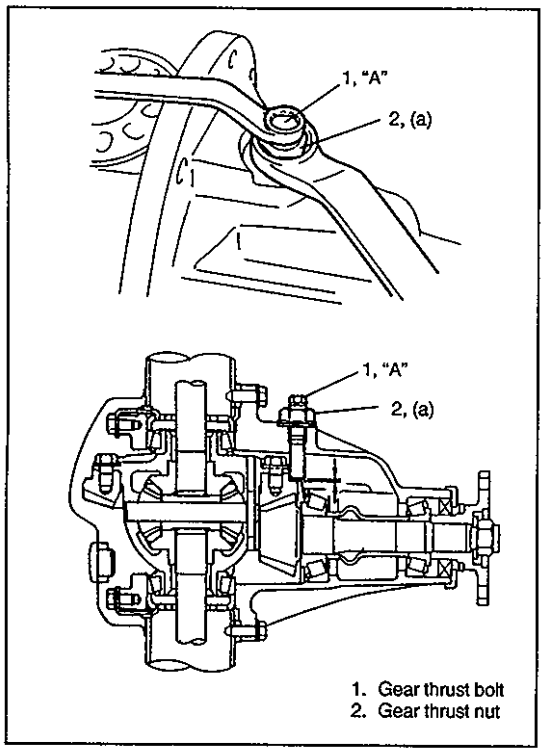

1. Gear thrust bolt
2. Gear thrust nut

12) Apply thread lock cement to thread part of gear thrust bolt and tighten gear thrust nut to specification.

"A": Thread lock cement 99000-32020

Tightening Torque
(a): 85 N·m (8.5 kg-m, 61.5 lb-ft)

TOOTH CONTACT PATTERN	DIAGNOSIS AND REMEDY
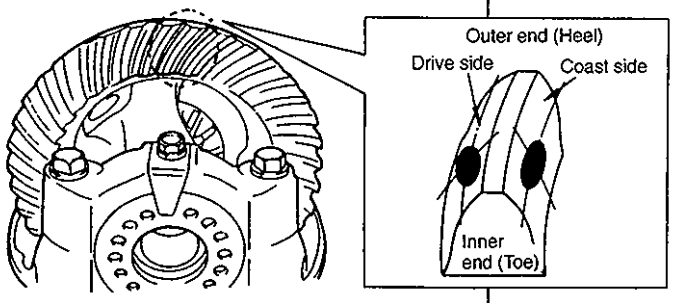	NORMAL
	HIGH CONTACT Pinion is positioned too far from the center of drive bevel gear. 1. Increase thickness of pinion height adjusting shim and position pinion closer to gear center. 2. Adjust drive bevel gear backlash to specification. 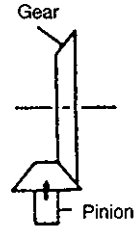
	LOW CONTACT Pinion is positioned too close to the center of drive bevel gear. 1. Decrease thickness of pinion height adjusting shim and position pinion farther from gear center. 2. Adjust drive bevel gear backlash to specification. 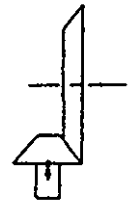
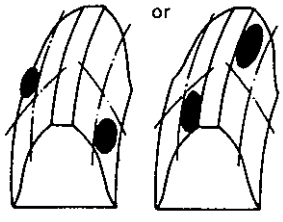	These contact patterns indicate that the "offset" of differential carrier is too much or too little. The remedy is to replace the carrier with a new one.
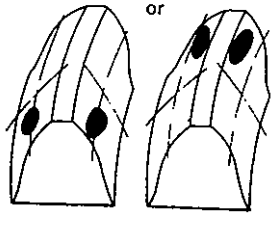	These contact patterns, located on toe or heel on both drive and coast sides, mean that 1) both pinion and gear are defective, 2) carrier is not true and square, or 3) gear is not properly seated on differential case. The remedy is to replace the defective member.
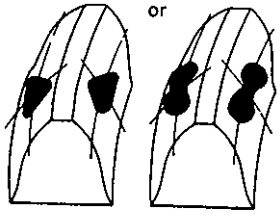	Irregular patterns: If the pattern is not oval, it means that bevel gear is defective. High or low spots on tooth surfaces or on the seat of bevel gear are the cause of irregular patterns appearing on some teeth. The remedy is to replace the pinion and gear set and, if the seat is defective, so is differential case.

INSTALLATION

Reverse removal procedure for installation, noting the following.

Differential
Before installing differential ass'y to axle housing, clean mating surfaces of differential carrier and housing and apply sealant to them.

Sealant: 99000-31110

Front Axle Shaft
For installation them, refer to "Front Suspension Installation" in SECTION 3D of this manual.

Rear Axle Shaft
For installation them, refer to SECTION 3E of this manual.

Propeller Shaft
Refer to SECTION 4B for installation.

Differential Gear Oil
Refill differential housing with new specified oil. Refer to "MAINTENANCE SERVICE" in this section for refill.

Brake Circuit Air Purging
Make sure to purge air out of brake circuit. Refer to section 5. BRAKES for "AIR BLEEDING" operation.
Then check to ensure that joint seam of pipe is free from oil leak.

TIGHTENING TORQUE SPECIFICATIONS

Fastening portion (✱: Applicable for front and rear)		Tightening Torque		
		N·m	kg-m	lb-ft
✱ Differential oil filler/level plug		50	5.0	36.5
✱ Differential oil drain plug		27	2.7	19.5
✱ Propeller shaft flange bolts		50	5.0	36.5
✱ Bevel gear bolts		85	8.5	61.5
✱ Bearing cap bolts	Front	50	5.0	36.5
	Rear	85	8.5	61.5
✱ Lock plate bolts		11.5	1.15	8.5
Front and rear differential carrier bolts		23	2.3	17.0
Gear thrust bolt (front only)		1.5	0.15	0.1
Gear thrust nut (front only)		85	8.5	61.5

REQUIRED SERVICE MATERIALS

MATERIALS	RECOMMENDED SUZUKI PRODUCT	USE
Thread lock cement	THREAD LOCK CEMENT SUPER 1333B (99000-32020)	• Bevel gear bolts • Gear thrust bolt
Lithium grease	SUZUKI SUPER GREASE A (99000-25010)	Oil seal lips
Sealant	SUZUKI BOND NO. 1215 (99000-31110)	• Rear differential drain plug • Mating surface of differential housing • Mating surface of rear axle housing

SPECIAL TOOLS

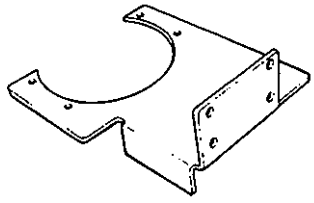 09944-76010 Differential carrier holder	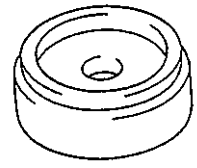 09951-16090 Oil seal installer	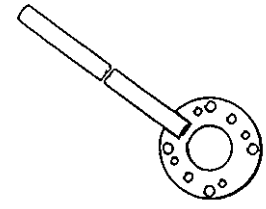 09922-66020 Flange holder	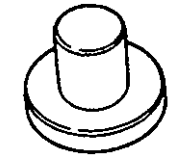 09913-85230 Bearing removing jig
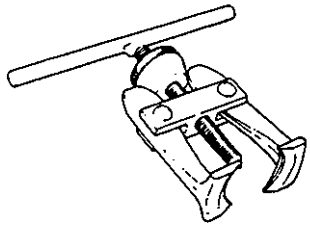 09913-61510 Bearing puller	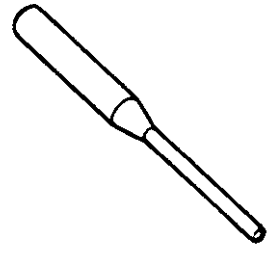 09922-85811 Spring pin remover	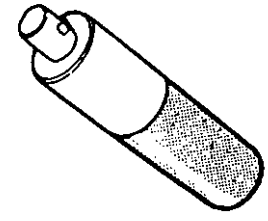 09924-74510 Installer attachment	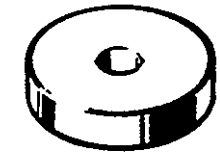 09926-68310 Bearing installer
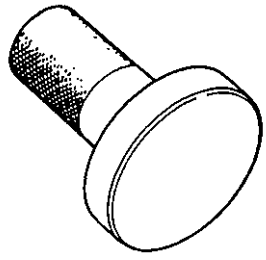 09913-75510 (O.D.70.5 mm) 09913-75520 (O.D.60.5 mm) Bearing installer	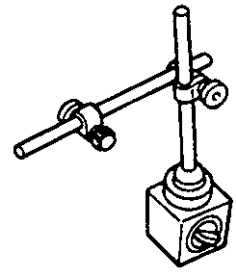 09900-20701 Magnetic stand	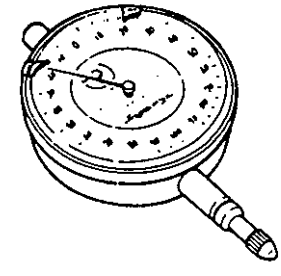 09900-20606 Dial gauge	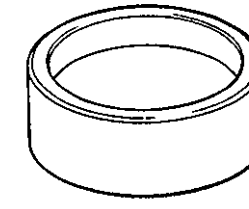 09944-66020 Bearing installer

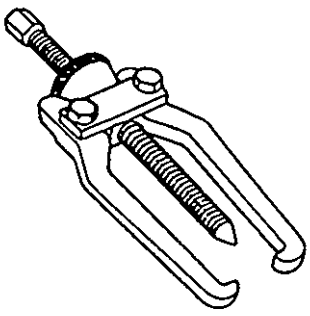 09913-65135 Bearing puller	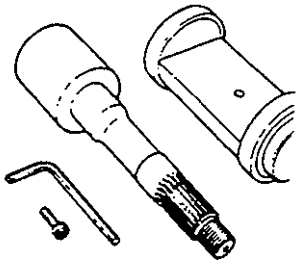 09924-36320 (For Front Diff) 09926-78311 (For Rear Diff) Bevel pinion mounting dummy	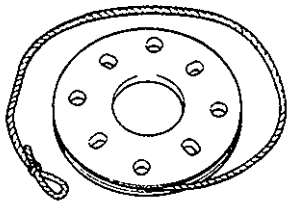 09922-75222 Preload adjuster	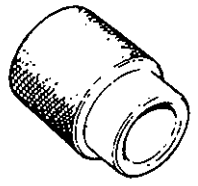 09940-53111 Bearing installer
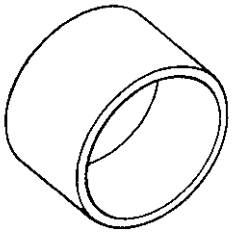 09951-18210 Oil seal remover & installer No. 2	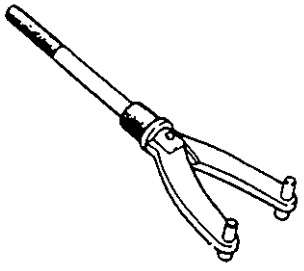 09930-40113 Rotor holder	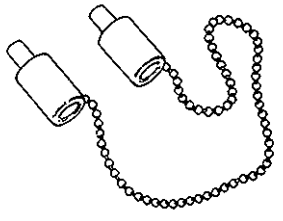 09930-40120 Attachment	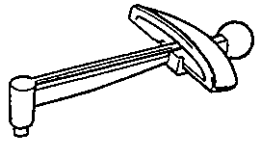 09900-21107 Torque wrench

SECTION 8

BODY ELECTRICAL SYSTEM

WARNING:
For vehicles equipped with Supplement Restraint (Air Bag) System

- **Service on and around the air bag system components or wiring must be performed only by an authorized SUZUKI dealer. Refer to "Air Bag System Components and Wiring Location View" under "General Description" in air bag system section in order to confirm whether you are performing service on or near the air bag system components or wiring. Please observe all WARNINGS and "Service Precautions" under "On-Vehicle Service" in air bag system section before performing service on or around the air bag system components or wiring. Failure to follow WARNINGS could result in unintentional activation of the system or could render the system inoperative. Either of these two conditions may result in severe injury.**
- **Technical service work must be started at least 90 seconds after the ignition switch is turned to the "LOCK" position and the negative cable is disconnected from the battery. Otherwise, the system may be activated by reserve energy in the Sensing and Diagnostic Module (SDM).**

CONTENTS

GENERAL DESCRIPTION 8- 3
Cautions in Servicing 8- 3
Wire Color Symbols 8- 5
Combination Meter 8- 6
Headlight 8- 7
Windshield Wiper and Washer 8- 7
DIAGNOSIS 8- 8
Headlight 8- 8
Headlights with Leveling System (If Equipped) 8- 8
Rear Fog Light (If Equipped) 8- 8
Turn Signal and Hazard Warning Lights 8- 9
Clearance, Tail and License Plate Lights 8- 9
Back-up Light 8- 9
Brake Lights 8- 9
Tachometer and ECM 8-10
Speedometer and VSS 8-10
Fuel Meter and Fuel Gauge Unit 8-10
Engine Coolant Temp. (ECT) Meter and ECT Sensor 8-10
Oil Pressure Light 8-10
Brake and Parking Brake Warning Light 8-11
Seat Belt Warning Light 8-11
Rear Window Defogger (If Equipped) 8-11
Windshield Wiper and Washer 8-12
Front Wiper and Washer 8-12
Rear Wiper and Washer (If Equipped) 8-12

Power Window Control System (If Equipped) 8-12
Power Door Lock System 8-12
Power Door Mirror Control System 8-13
Cigarette Lighter 8-13
Interior Lights 8-13

ON-VEHICLE SERVICE 8-14
Headlight 8-14
Headlights with Leveling System (If Equipped) 8-16
Turn Signal and Hazard Warning Light 8-17
Rear Fog Light (If Equipped) 8-18
Combination Meter 8-19
Fuel Meter/Fuel Gauge Unit 8-19
Engine Coolant Temperature Meter and Sensor Unit 8-20
Oil Pressure Warning Light 8-21
Brake and Parking Brake Warning Light 8-21
Seat Belt Warning Light 8-22
Rear Window Defogger (If Equipped) 8-22
Windshield Wipers 8-24
Front Wiper and Washer 8-24
Rear Wiper and Washer (If Equipped) 8-28
Power Window Control System (If Equipped) 8-29
Power Door Lock System 8-30
Power Door Mirror Control System 8-32

GENERAL DESCRIPTION

The body electrical components of this vehicle are designed to operate on 12 Volts power supplied by the battery. The electrical system utilizes negative ground polarity.

CAUTIONS IN SERVICING

When performing works related to electric systems, observe following cautions for the purpose of protection of electrical parts and prevention of a fire from occurrence.

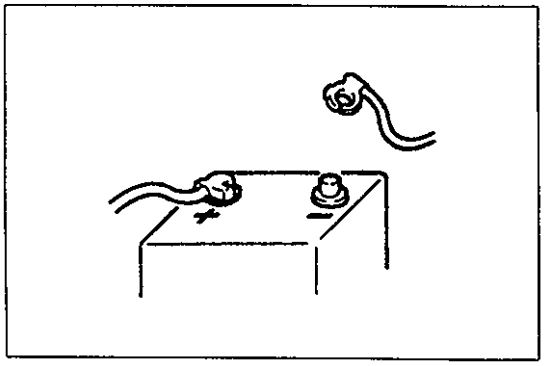

- When removing the battery from the vehicle or disconnecting the cable from the battery terminals for inspection or service works on the electric systems, always confirm first that the ignition switch and all the other switches have been turned OFF. Otherwise, the semi-conductor part may be damaged.
- When disconnecting cables from the battery, be sure to disconnect the one from the negative (–) terminal first and then the other from the positive (+) terminal.
- Reverse the above order when connecting the cables to the battery terminals.

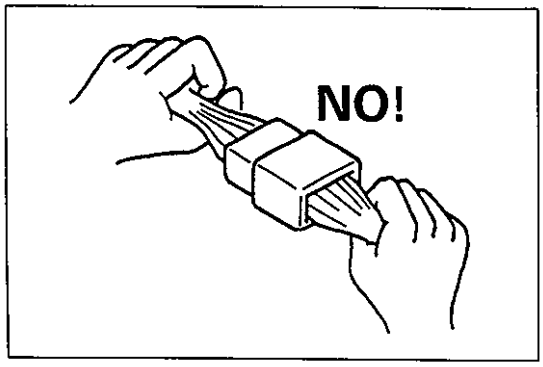

- When disconnecting connectors, never pull the wiring harnesses. Unlock the connector lock first and then pull them apart by holding connectors themselves.

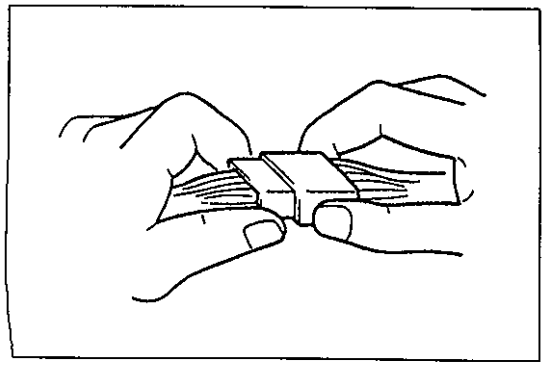

- When connecting connectors, also hold connectors and push them together until they lock securely (a click is heard).

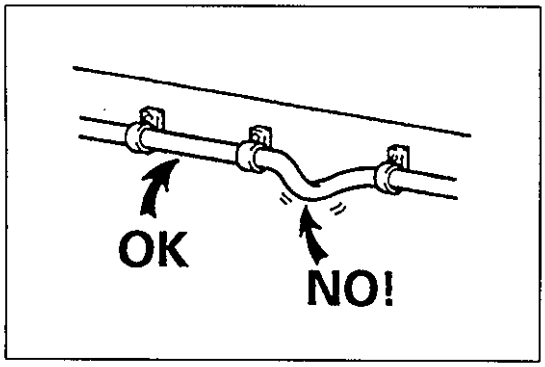

- When installing the wiring harness, fix it with clamps so that no slack is left.

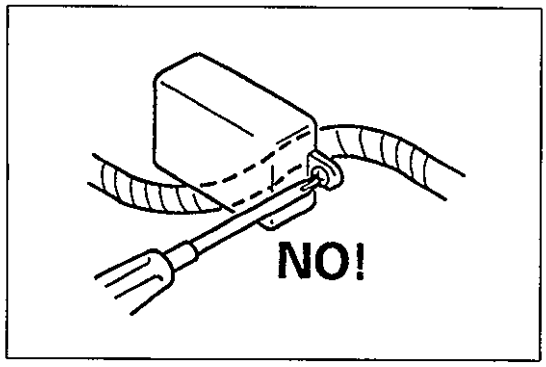

- When installing vehicle parts, be careful so that the wiring harness is not interfered with or caught by any other part.

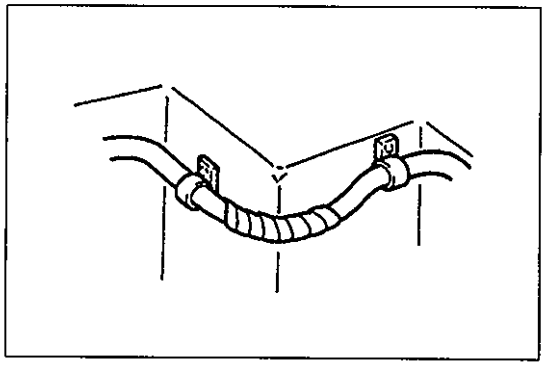

- To avoid damage to the harness, protect its part which may contact against a part forming a sharp angle by winding tape or the like around it.

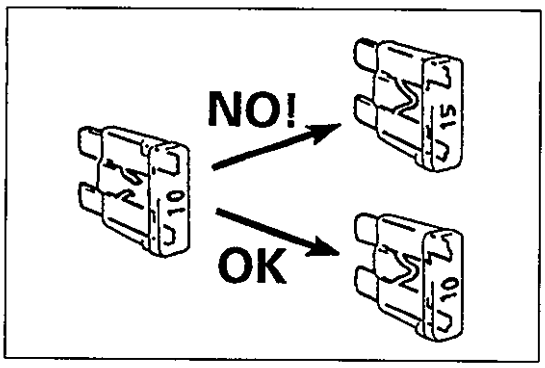

- When replacing a fuse, make sure to use a fuse of the specified capacity. Use of a fuse with a larger capacity will cause a damage to the electrical parts and a fire.

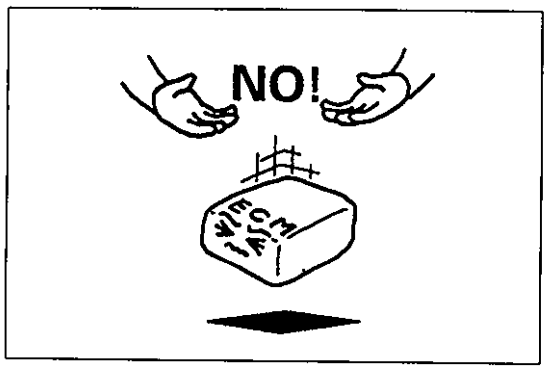

- Always be careful not to handle electrical parts (computer, relay, etc.) in a rough manner or drop them.

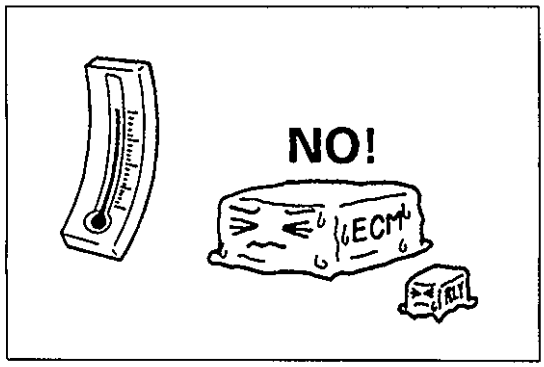

- When performing a work that produces a heat exceeding 80°C in the vicinity of the electrical parts, remove the heat sensitive electrical part(s) beforehand.

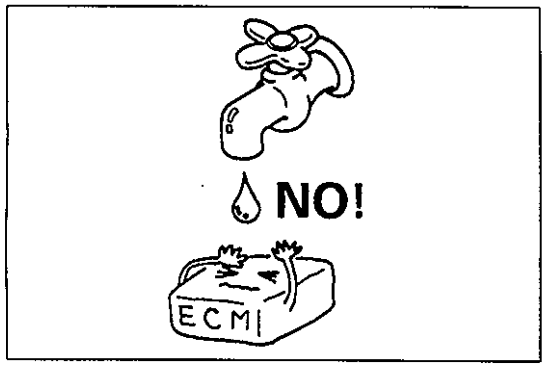

- Use care not to expose connectors and electrical parts to water which will be a cause of a trouble.

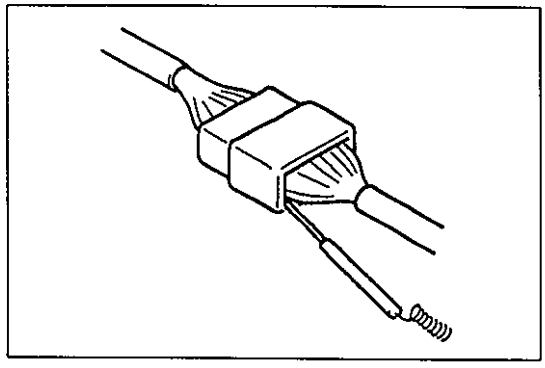

- When using a tester for checking continuity or measuring voltage, be sure to insert the tester probe from the wire harness side.

Symbol	Wire Color	Symbol	Wire Color
B	Black	O	Orange
Bl	Blue	R	Red
Br	Brown	W	White
G	Green	Y	Yellow
Gr	Gray	P	Pink
Lbl	Light blue	V	Violet
Lg	Light green		

WIRE COLOR SYMBOLS

The wire color is abbreviated to the first (or first two) alphabet(s) of each color.

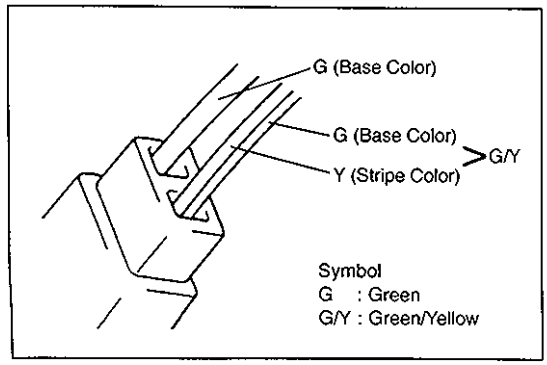

There are two kinds of colored wire used in this vehicle. One is single-colored wire and the other is dual-colored (striped) wire. The single-colored wire uses only one color symbol (i.e. "G"). The dual-colored wire uses two color symbols (i.e. "G/Y"). The first symbol represents the base color of the wire ("G" in the figure) and the second symbol represents the color of the stripe ("Y" in the figure).

COMBINATION METER

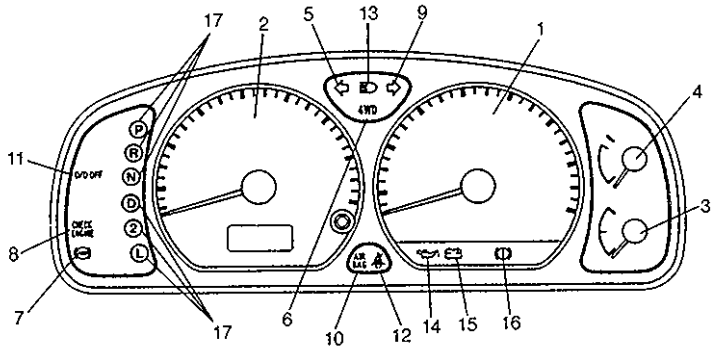

1. Tachometer
2. Speedometer
3. Fuel lever meter
4. Water temperature meter
5. Turn signal pilot light (LH)
6. 4WD indicator
7. ABS warning light (if equipped)
8. CHECK ENGINE light
9. Turn signal pilot light (RH)
10. AIR BAG warning light (if equipped)
11. O/D OFF light (A/T vehicle only)
12. Fasten seat belt light (if equipped)
13. High beam light
14. Oil pressure warning light
15. Charge warning light
16. Brake warning light
17. Shift position indicator (A/T vehicle, if equipped)

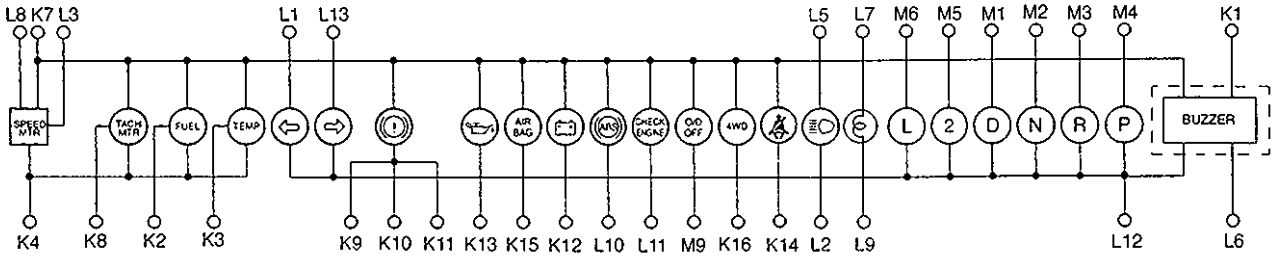

NOTE:
Terminal arrangement of coupler viewed from harness side.

Coupler K

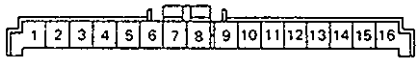

Coupler L

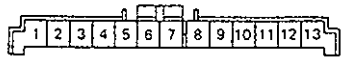

Coupler M

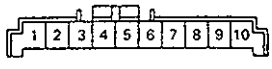

Coupler K

1.	To ignition switch (if equipped)	Bl/G
2.	To fuel level gauge	Y/R
3.	To ECT sensor	Y/W
4.	To ground	B/O
5.	Blank	—
6.	Blank	—
7.	To ignition switch	B/W
8.	To ECM	Br
9.	To ignition switch (if equipped)	V/R
10.	To brake fluid level switch	R/B
11.	To parking brake switch	R/G
12.	To alternator	W/R
13.	To oil pressure switch	Y/B or Y/Bl
14.	To seat belt switch (if equipped)	Lg
15.	To air bag controller (if equipped)	Bl
16.	To 4WD controller (if equipped)	Bl

Coupler L

1.	To combination switch (turn L)	G/R
2.	To combination switch (dimmer sw)	R
3.	To VSS	Y/G
4.	Blank	—
5.	To main fuse	W/Bl
6.	To door switch (if equipped)	B/Y
7.	To combination switch (dimmer sw)	R/Y
8.	To main fuse	W
9.	To ground	B
10.	To ABS controller (if equipped)	R/Bl
11.	To ECM	V/Y
12.	To ground	B
13.	To combination switch (turn R)	G/Y

Coupler M

1.	To shift switch (A/T vehicle, if equipped)	G/R
2.	To shift switch (A/T vehicle, if equipped)	O
3.	To shift switch (A/T vehicle, if equipped)	R
4.	To shift switch (A/T vehicle, if equipped)	O/B
5.	To shift switch (A/T vehicle, if equipped)	G
6.	To shift switch (A/T vehicle, if equipped)	G/W
7.	Blank	—
8.	Blank	—
9.	To transmission control module (A/T vehicle, if equipped)	Bl/Y
10.	Blank	—

HEADLIGHT

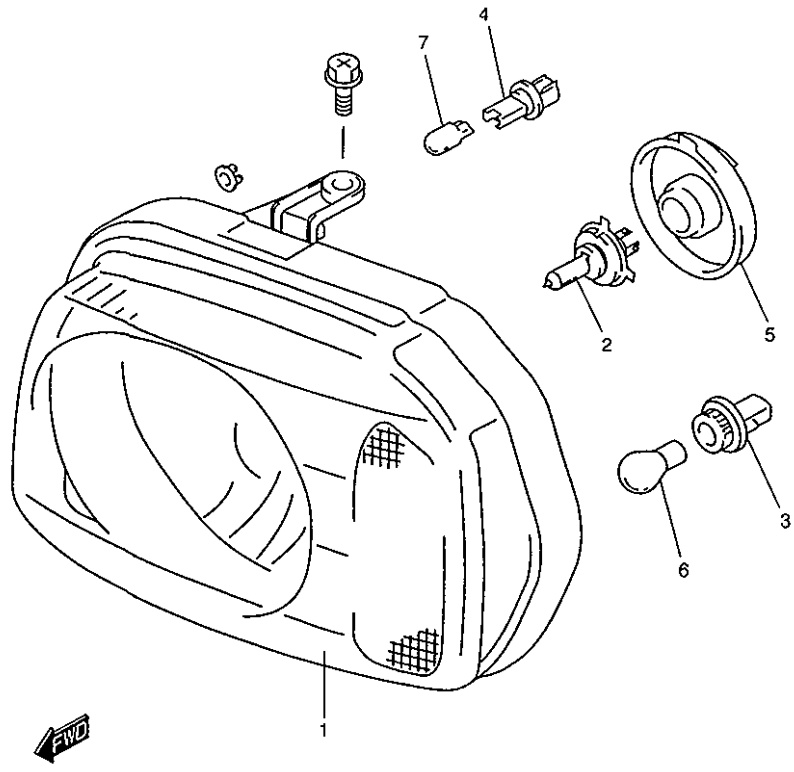

1. Headlight assembly
2. Halogen bulb
3. Turn signal light socket
4. Position light socket
5. Socket cover
6. Turn signal light bulb
7. Position light bulb

WINDSHIELD WIPER AND WASHER

FRONT WIPER

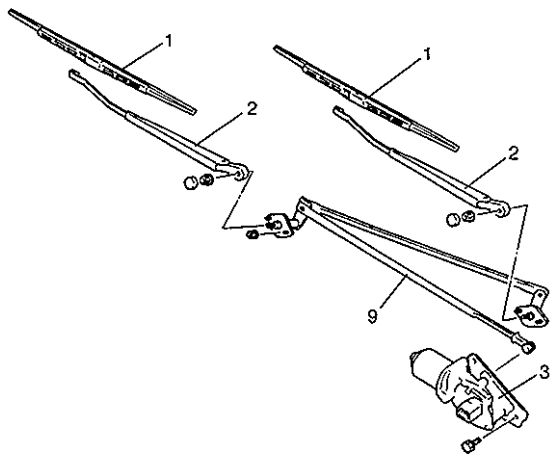

REAR WIPER

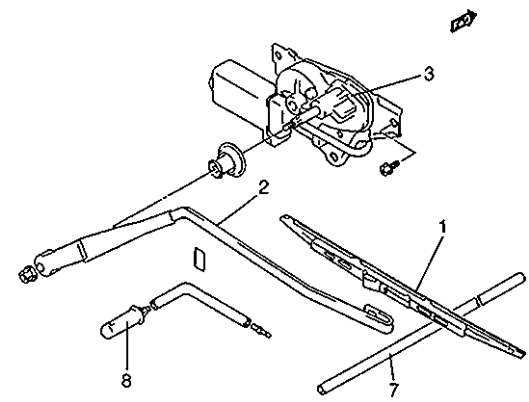

WASHER

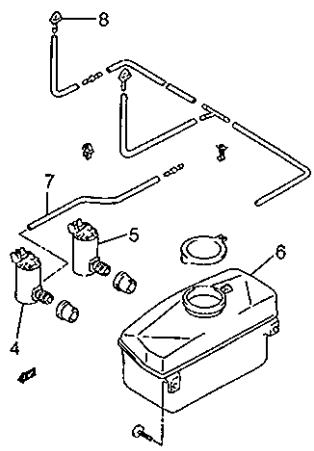

1. Wiper blade
2. Wiper arm
3. Wiper motor
4. Washer pump (for front washer)
5. Washer pump (for rear washer)
6. Washer tank
7. Washer hose
8. Washer nozzle
9. Wiper link

DIAGNOSIS

HEADLIGHT

Trouble	Possible Cause	Correction
Headlights do not light up	Bulb blown	Check bulb
	Headlight switch faulty	Check headlight switch
	HEAD R and L fuses blown	Check fuses and replace as necessary (If replace, check short circuit)
	Wiring or grounding faulty	Repair circuit
Only one headlight does not light up	Bulb blown	Check bulb
	HEAD R or L fuse blown	Check fuse and replace as necessary
	Headlight switch faulty	Check headlight switch
	Wiring or grounding faulty	Repair circuit
Only one beam ("Hi" or "Lo") does not light	Bulb burnt out	Replace bulb
	Lighting or dimmer switch faulty	Check switch

HEADLIGHTS WITH LEVELING SYSTEM (IF EQUIPPED)

Trouble	Possible Cause	Correction
Both headlights do not move	Fuse blown	Check circuit and replace fuse
	Leveling switch faulty	Check switch or replace it as necessary
	Supply voltage too low	Recharge or replace battery
One of headlights (either Right or Left) does not move	Socket, wiring or grounding faulty	Repair as necessary
	Actuator faulty	Replace actuator
	Vehicle body around headlight deformed	Repair body
	Headlight ass'y itself deformed	Replace headlight ass'y

REAR FOG LIGHT (If equipped)

Trouble	Possible Cause	Correction
Rear fog light does not come on	Main fuse and/or fuses blown	Replace main fuse and/or fuses to check for short
	Rear fog light switch faulty	Check fog light switch
	Lighting switch faulty	Check switch
	Wiring or grounding faulty	Repair as necessary
	Bulb burnt out	Replace

TURN SIGNAL AND HAZARD WARNING LIGHTS

Trouble	Possible Cause	Correction
Flash rate high or one side only flashes	Bulb blown on "flash rate high"-side Incorrect bulb Turn signal/hazard warning relay faulty Open circuit or high resistance existing between turn signal/hazard warning switch and light on one side Wiring or grounding faulty	Check bulb Check bulb Check relay Repair circuit Repair circuit
No flashing	HAZARD HORN and/or TURN BACK fuse blown Open circuit or high resistance existing between battery and switch Turn signal/hazard relay faulty Combination switch and/or hazard switch faulty	Check fuse and replace as necessary (If replace, check short circuit) Check bulb and check circuit Check relay Check switch
Flash rate low	Supply voltage low Turn signal/hazard relay faulty	Check charging system Check relay

CLEARANCE, TAIL AND LICENSE PLATE LIGHTS

Trouble	Possible Cause	Correction
All lights do not light up	Bulb(s) blown TAIL fuse blown Wiring or grounding faulty	Check bulb Check fuse and replace as necessary (If replace, check short circuit) Repair circuit
Some lights do not light up	Bulb(s) blown Wiring or grounding faulty	Check bulb Repair circuit

BACK-UP LIGHT

Trouble	Possible Cause	Correction
Back-up lights do not light up	Bulb(s) blown TURN BACK fuse blown Back-up light switch faulty Wiring or grounding faulty	Check bulb Check fuse and replace as necessary (If replace, check short circuit) Check switch Repair circuit
Back-up lights stay on	Back-up light switch faulty	Check or replace switch

BRAKE LIGHTS

Trouble	Possible Cause	Correction
Brake lights do not light up	Bulb(s) blown STOP fuse blown Brake light switch faulty Wiring or grounding faulty	Check bulb Check fuse and replace as necessary (If replace, check short circuit) Check switch Repair circuit
Brake lights stay on	Brake light switch faulty	Check, adjust or replace switch

TACHOMETER AND ECM

Trouble	Possible Cause	Correction
Tachometer shows no operation	IG METER fuse blown	Check fuse and replace as necessary
	Wiring or grounding faulty	Repair circuit
	Tachometer faulty	Replace tachometer
	ECM or other controller faulty	Check ECM and other controller

SPEEDOMETER AND VSS

Trouble	Possible Cause	Correction
Speedometer shows no operation	IG METER fuse blown	Check fuse
	VSS faulty	Check VSS
	Wiring or grounding faulty	Repair
	Speedometer faulty	Replace speedometer

FUEL METER AND FUEL GAUGE UNIT

Trouble	Possible Cause	Correction
Fuel meter shows no operation	IG COIL METER fuse blown	Check fuse (If replace, check short circuit)
	Fuel gauge unit	Check fuel gauge unit
	Fuel meter	Check fuel meter
	Wiring or grounding	Repair circuit

ENGINE COOLANT TEMP. (ECT) METER AND ECT SENSOR

Trouble	Possible Cause	Correction
Engine coolant temp. meter shows no operation	IG COIL METER fuse blown	Check fuse and replace as necessary (If replace, check short circuit)
	ECT meter faulty	Check ECT meter
	ECT sensor faulty	Check ECT sensor
	Wiring or grounding faulty	Repair circuit

OIL PRESSURE LIGHT

Trouble	Possible Cause	Correction
Oil pressure warning light does not light up when ignition switch is on at engine off	Bulb in combination meter blown	Check bulb
	IG COIL METER fuse blown	Check fuse and replace as necessary (If replace, check short circuit)
	Combination meter wiring circuit faulty	Check combination meter wiring circuit
	Oil pressure switch faulty	Check oil pressure switch
	Wiring or grounding faulty	Repair circuit

BRAKE AND PARKING BRAKE WARNING LIGHT

Trouble	Possible Cause	Correction
Brake warning light does not light up when fluid low level	Bulb in combination meter blown	Check bulb
	IG COIL METER fuse blown	Check fuse and replace as necessary (If replace, check short circuit)
	Combination meter wiring circuit faulty	Check combination meter wiring circuit
	Brake fluid level switch faulty	Check brake fluid level switch
	Wiring or grounding faulty	Repair circuit
Brake warning light does not light up when cranking (when ignition switch at ST position)	Ignition switch faulty	Check ignition switch
	Combination meter wiring circuit faulty	Check combination meter wiring circuit
	Wiring or grounding faulty	Repair circuit
Brake warning light does not light up when parking brake pull up	Bulb in combination meter blown	Check bulb
	IG COIL METER fuse blown	Check fuse and replace as necessary (If replace, check short circuit)
	Combination meter wiring circuit faulty	Check combination meter wiring circuit
	Parking brake switch faulty	Check parking brake switch
	Wiring or grounding faulty	Repair circuit

SEAT BELT WARNING LIGHT

Trouble	Possible Cause	Correction
Seat belt warning light does not light up	Bulb in combination meter blown	Check bulb
	Seat belt switch faulty	Check seat belt switch
	IG COIL METER fuse blown	Check fuse and replace as necessary (If replace, check short circuit)
	Wiring or grounding faulty	Repair circuit

REAR WINDOW DEFOGGER (IF EQUIPPED)

Trouble	Possible Cause	Correction
Defogger does not operate	REAR DEFG fuse blown	Check fuse and replace as necessary (If replace, check short circuit)
	Heat wire faulty	Check heat wire
	Rear window defogger switch faulty	Check switch
	Wiring or grounding faulty	Repair circuit

WINDSHIELD WIPER AND WASHER

FRONT WIPER AND WASHER

REAR WIPER AND WASHER (IF EQUIPPED)

Trouble	Possible Cause	Correction
Wiper malfunctions or does not return to its original position	WIPER WASHER fuse blown	Check fuse and replace as necessary (If replace, check short circuit)
	Wiper motor faulty	Check wiper motor
	Wiper switch faulty	Check wiper switch
	Wiring or grounding faulty	Repair circuit
Washer malfunctions	Washer hose or nozzle clogged	Clean or repair clogged hose or nozzle
	WIPER WASHER fuse blown	Check fuse and replace as necessary (If replace, check short circuit)
	Washer motor faulty	Check washer motor
	Wiper switch faulty	Check wiper switch
	Wiring or grounding faulty	Repair circuit

POWER WINDOW CONTROL SYSTEM (IF EQUIPPED)

Trouble	Possible Cause	Correction
All power windows do not operate	Circuit breaker in operation or faulty	Check breaker and replace as necessary
	Ignition (main) switch faulty	Check ignition (main) switch
	Power window switch faulty	Check power window switch
	Wiring or grounding faulty	Repair circuit
Only one power window does not operate	Wiring and/or coupler faulty	Check wiring and/or coupler
	Power window switch (main or sub) faulty	Check power window switch
	Window actuator faulty	Check window actuator
	Grounding faulty	Repair

POWER DOOR LOCK SYSTEM

Trouble	Possible Cause	Correction
All power door locks do not operate	DOOR LOCK fuse blown	Replace fuse to check for short
	Power door lock controller faulty	Check controller
	Wiring or grounding faulty	Repair as necessary
Power door locks do not operate by power door lock switch	Power door lock switch faulty	Check switch
	Power door lock controller faulty	Check controller
	Wiring or grounding faulty	Repair as necessary
Only one power door lock does not operate	Actuator (door lock motor) faulty	Repair as necessary
	Wiring or grounding faulty	Repair as necessary

POWER DOOR MIRROR CONTROL SYSTEM

Trouble	Possible Cause	Correction
All power mirrors do not operate	CIGAR RADIO fuse blown Power door mirror switch faulty Wiring or grounding faulty	Replace fuse to check for short Check switch Repair as necessary
One power mirror does not operate	Power door mirror switch faulty Actuator (power door mirror motor) faulty Wiring or grounding faulty	Check switch Check actuator Repair as necessary

CIGARETTE LIGHTER

Trouble	Possible Cause	Correction
Cigarette lighter shows no operation	RADIO CIGAR fuse blown Ignition switch faulty Cigarette lighter faulty Wiring or grounding faulty	Check fuse and replace as necessary (If replace, check short circuit) Check ignition switch Check cigarette lighter Repair circuit

INTERIOR LIGHTS

Trouble	Possible Cause	Correction
Interior lights do not light up	Bulbs blown TAIL STOP fuse blown Interior light switch faulty Door switch faulty Wiring or grounding	Replace Check fuse and replace as necessary (If replace, check short circuit) Check switch Check switch Repair
One of interior light does not light up	Bulb blown Interior light switch faulty Door switch faulty Wiring or grounding	Replace Check switch Check switch Repair

LH steering vehicle shown

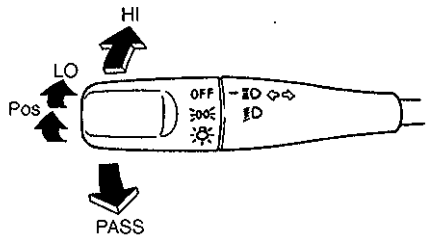

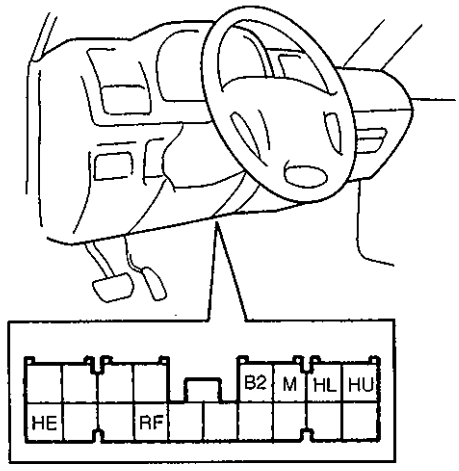

ON-VEHICLE SERVICE

HEADLIGHT

HEADLIGHT SWITCH

INSPECTION

1) Disconnect negative (-) cable at battery.
2) Disconnect combination switch lead wire couplers from junction/fuse block.
3) Use a circuit tester to check the continuity at each switch position shown below.

Terminal / Switch Position / Wire Color	HE	HU	HL	RF
	B	R	R/W	Br/Y
Passing	○	○		
Low Beam			○	○
High Beam		○		○

Terminal / Switch Position / Wire Color	HE	RF	B2	M
	B	Br/Y	W	R/Y
OFF				
			○	○
	○	○	○	○

REMOVAL AND INSTALLATION

Refer to COMBINATION SWITCH/CONTACT COIL AND COMBINATION SWITCH ASSEMBLY in Section 3C for details.

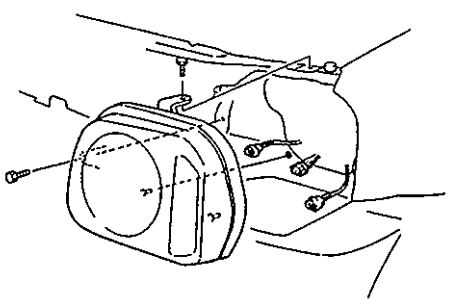

HEADLIGHT

REMOVAL

1) Disconnect negative cable at battery.
2) Remove front bumper.
3) Remove headlight mounting bolts.
4) Detach headlight assembly from vehicle.
5) Disconnect couplers from headlight assembly.
6) Remove headlight assembly.

INSTALLATION

Reverse removal procedure for installation.

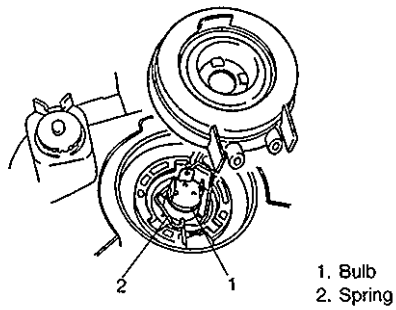

1. Bulb
2. Spring

BULB REPLACEMENT

WARNING:
Don't touch when the bulb is hot.

1) Disconnect negative (–) cable at battery.
2) Disconnect harness from bulb.
3) Remove socket cover and bulb.
4) Replace bulb and assemble all removed parts.

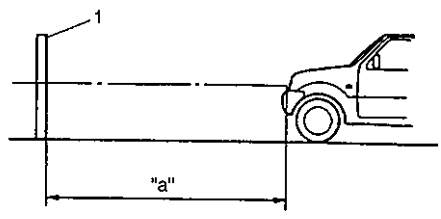

1. Screen

LH steering vehicle shown

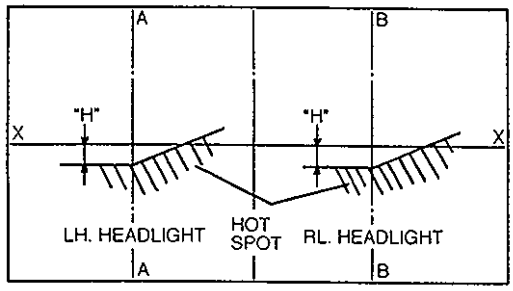

X - X: Horizontal center line of headlights bulb
A - A: Vertical center line of left headlight bulb
B - B: Vertical center line of right headlight bulb

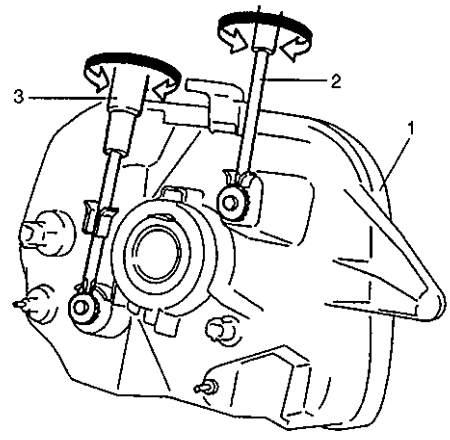

1. Headlight ass'y
2. Aiming (for right/left adjustment)
3. Aiming (for up/down adjustment)

HEADLIGHT AIMING WITH SCREEN

NOTE:

- **Unless otherwise obligated by local regulations, adjust headlight aiming according to following procedure.**
- **After replacing headlight, be sure to adjust aiming.**

Before adjustment, make sure the following.

a) Place vehicle on a flat surface in front of blank wall (screen) ahead of headlight surface.

Clearance "a": 10 m (32.8 ft.)

b) Adjust air pressure of all tires to a specified value respectively.
c) Bounce vehicle body up and down by hand to stabilize suspension.
d) Carry out with one driver aboard.

Driver's weight: 75 kg (165 lb)

Adjustment

1) Check to see if hot spot (high intensity zone) of each main (low) beam axis falls as illustrated.

Clearance "H": Approx. 130 mm (5.15 in.)

2) If headlight aiming is not set properly, align it to specification by adjusting aiming screw and aiming gear.

LH steering vehicle shown

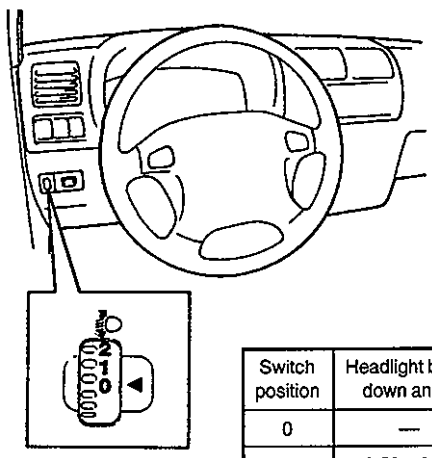

Switch position	Headlight beam down angle
0	—
1	0.52 – 0.57
2	1.09 – 1.14
3	1.66 – 1.71
4	2.23

HEADLIGHTS WITH LEVELING SYSTEM (IF EQUIPPED)

LEVELING SWITCH

INSPECTION

To check the switch operation, substitute it with a new one. If proper operation is obtained, it means the switch is defective. Replace it with a new one.

LEVELING ACTUATOR

INSPECTION

All headlight system couplers connected including leveling actuator and switch, and at Ignition switch ON, listen to the leveling actuator sound on both actuators according to the movement of the leveling switch. If no sound is heard with the movement of the leveling switch, replace headlight assembly.

LH steering vehicle shown

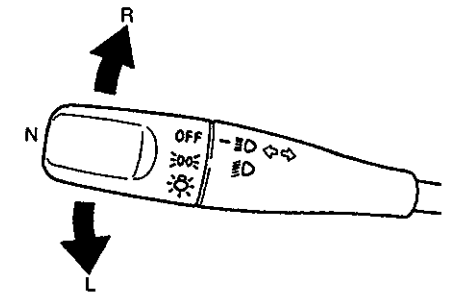

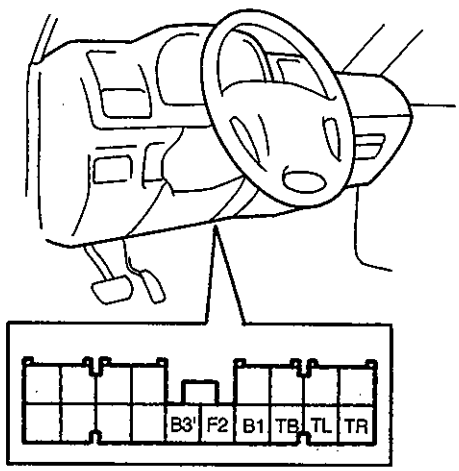

TURN SIGNAL AND HAZARD WARNING LIGHT

TURN SIGNAL LIGHT SWITCH

INSPECTION

1) Disconnect negative (–) cable at battery.
2) Disconnect combination switch lead wire coupler.
3) Use a circuit tester to check the continuity at each switch position shown below.

Hazard SW / Turn Signal SW	Terminal / Wire Color	TL G/R	TB G	TR G/Y	B3' Y	B1 Y/W	F2 W/G
OFF	L	○—○					
	N				○—○		
	R		○—○				
ON		○—○	○—○	○—○		○—○	○—○

REMOVAL AND INSTALLATION

Refer to COMBINATION SWITCH/CONTACT COIL AND COMBINATION SWITCH ASSEMBLY in Section 3C for details.

LH steering vehicle shown

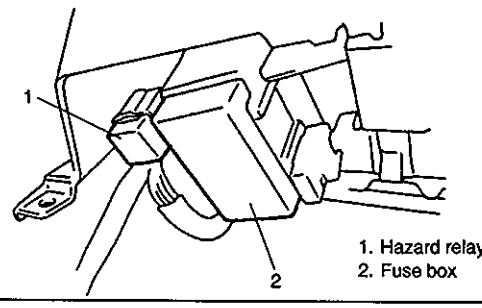

1. Hazard relay
2. Fuse box

HAZARD RELAY

The turn signal/hazard relay is located near the fuse box.

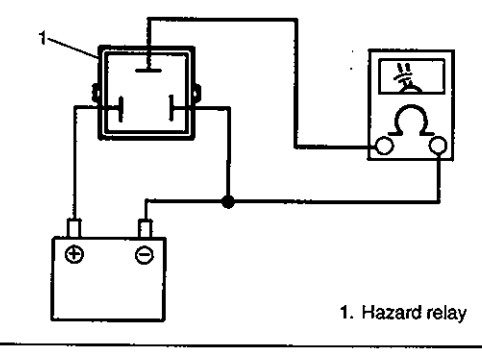

1. Hazard relay

INSPECTION

Connect battery and tester as shown left.
Unless a continued click sound is heard, replace relay.

REAR FOG LIGHT (IF EQUIPPED)

REAR FOG LIGHT SWITCH

INSPECTION

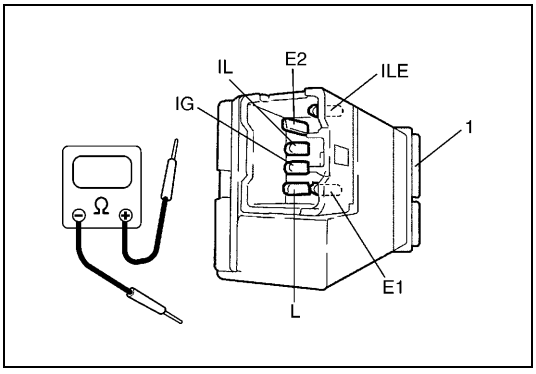

1) Check for continuity between terminals at each switch position as shown below.
   If check result is not as specified, replace switch.
   If check result is specified, go to next step.

TERMINAL / FOG SW (1)	IG	E1	E2	L	IL	ILE
FREE			○	○		
PUSH	○	○	○	○	○	○

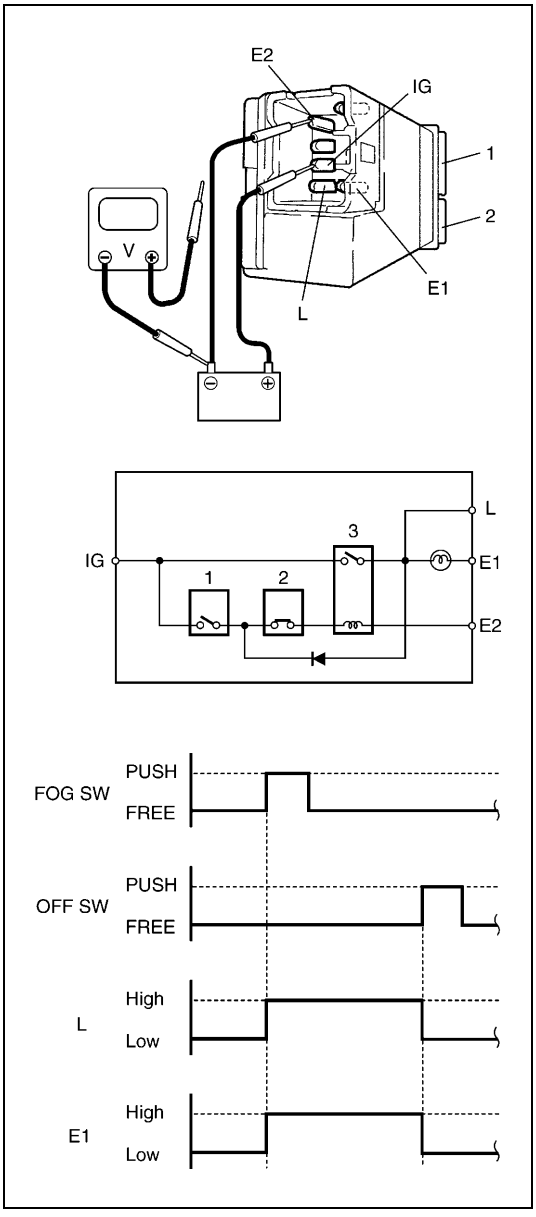

2) Connect battery positive terminal to terminal “IG” and negative terminal to terminal “E2”.
3) Measure voltage between the following terminals.
   [When rear fog light switch is at ON position]
   - Between “L” and battery negative terminal: 10 – 14 V
   - Between “E1” and battery negative terminal: 10 – 14 V

   [When rear fog light switch is at OFF position]
   - Between “L” and battery negative terminal: 0 V
   - Between “E1” and battery negative terminal: 0 V

   If not, replace switch.

3. Fold relay

RH steering vehicle shown

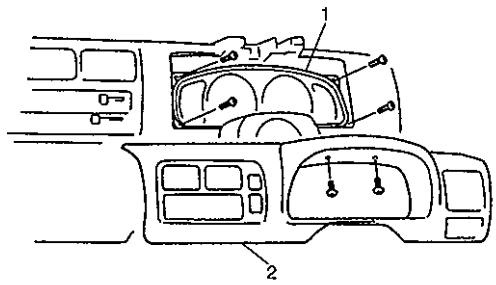

1. Combination meter
2. Cluster panel

COMBINATION METER

REMOVAL

1) Disconnect negative cable at battery.
2) Loosen steering column mounting screws and nuts. (Refer to Section 3C.)
3) Remove meter cluster panel. Make sure to disconnect all couplers of switches and wires of cigarette lighter on meter cluster.
4) Disconnect couplers from combination meter.
   Remove combination meter.

INSTALLATION

Reverse removal procedure for installation.

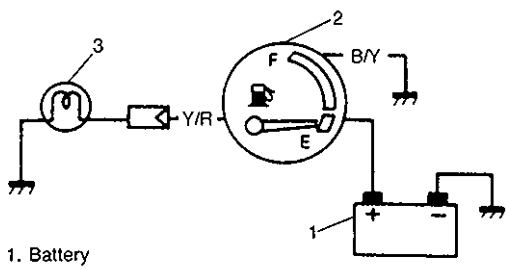

1. Battery
2. Fuel meter
3. Test light (12V, 3.4W)

FUEL METER/FUEL GAUGE UNIT

FUEL LEVEL METER

INSPECTION

1) Disconnect Y/R lead wire going to gauge unit.
2) Use a bulb (12V 3.4W) in position to ground lead wire as illustrated.
3) Turn ignition switch ON.
   Make sure that bulb is lighted with meter pointer fluctuating several seconds thereafter. If meter is faulty, replace.

FUEL SENDER GAUGE

INSPECTION

Remove fuel pump assembly referring to Section 6C of this manual.

Use an ohmmeter to confirm that resistance of sender gauge unit changes with change of float position.

Float Position		Resistance (Ω)
Full Upper "a"	91.4 mm (4.03 in.)	2 - 4
Middle (1/2) "b"	154.8 mm (6.20 in.)	29.5 - 35.5
Full Lower "c"	263.5 mm (8.60 in.)	119 - 121

If the measured value is out of specification, replace.

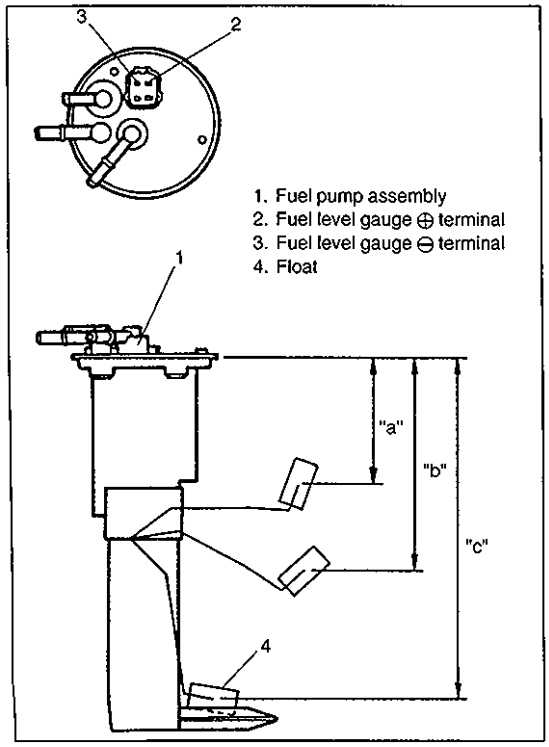

1. Fuel pump assembly
2. Fuel level gauge ⊕ terminal
3. Fuel level gauge ⊖ terminal
4. Float

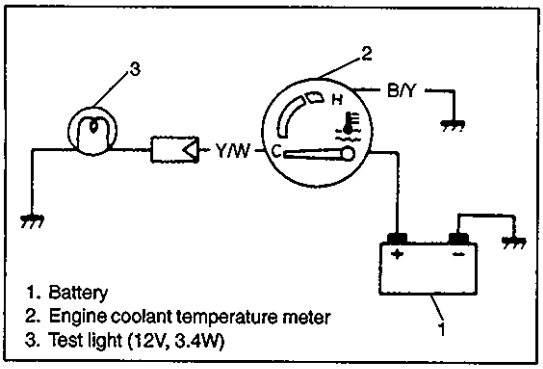

1. Battery
2. Engine coolant temperature meter
3. Test light (12V, 3.4W)

ENGINE COOLANT TEMPERATURE METER AND SENSOR UNIT

ENGINE COOLANT TEMPERATURE METER

INSPECTION

1) Disconnect Y/W lead wire going to sender gauge installed to thermostat case.
2) Use a bulb (12V 3.4W) in position to ground wire as illustrated.
3) Turn main switch ON. Confirm that bulb is lighted with meter pointer fluctuating several seconds thereafter.
   If not, replace.

ENGINE COOLANT TEMPERATURE SENSOR

REMOVAL

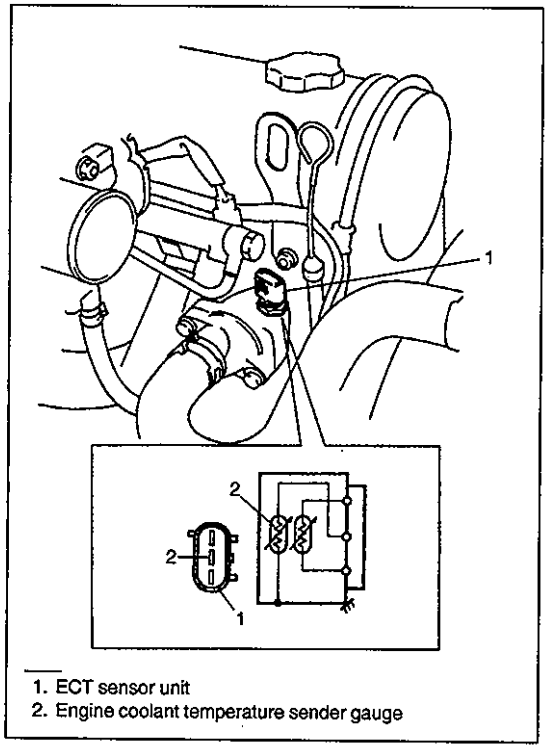

1. ECT sensor unit
2. Engine coolant temperature sender gauge

WARNING:
- **Make sure that engine coolant temperature is cold before removing any part of cooling system.**
- **Also be sure to disconnect negative cable from battery terminal before removing any part.**

1) Drain coolant.
2) Remove engine coolant temperature sensor.

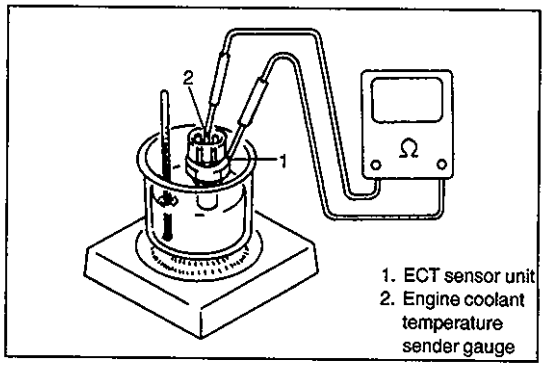

1. ECT sensor unit
2. Engine coolant temperature sender gauge

INSPECTION

Warm up sender gauge. Thus make sure its resistance is decreased with increase of its temperature.

Temperature	Resistance
50°C (122°F)	136 - 216 Ω
120°C (248°F)	16.4 - 19.4 Ω

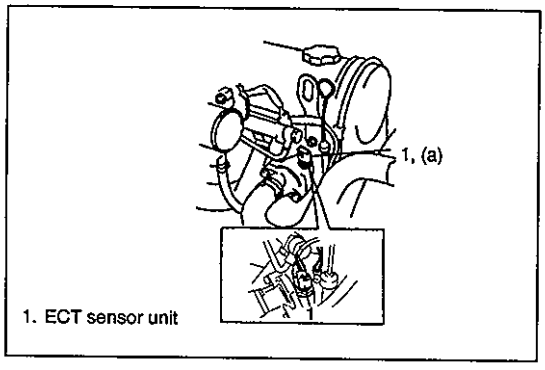

1. ECT sensor unit

INSTALLATION

Reverse removal procedure for installation noting the following:
Apply sealant to the thread of ECT sensor.

Sealant 99000 - 31150

Tightening Torque
(a) : 15 N·m (1.5 kg-m, 11.3 lb-ft)

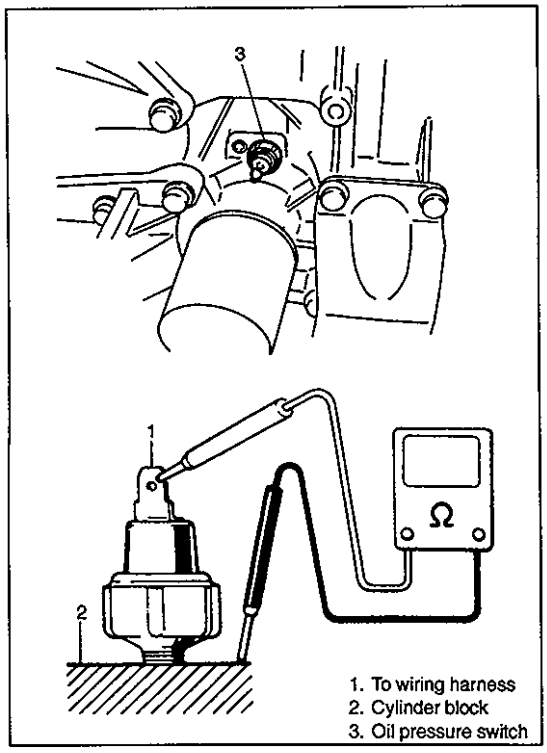

OIL PRESSURE WARNING LIGHT

OIL PRESSURE SWITCH

INSPECTION

Use an ohmmeter to check switch continuity.

During Engine Running	No continuity (∞ Ω)
At Engine Stop	Continuity (0 Ω)

REMOVAL AND INSTALLATION

Refer to Section 6A OIL PRESSURE CHECK in this manual.

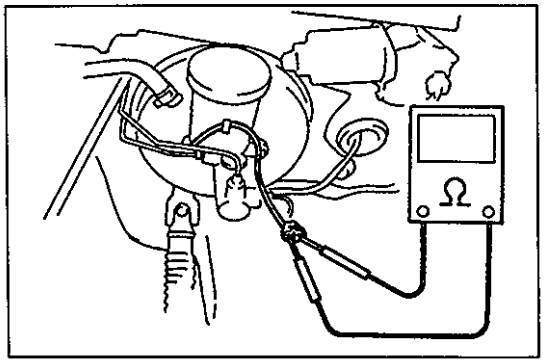

BRAKE AND PARKING BRAKE WARNING LIGHT

INSPECTION

- BRAKE FLUID LEVEL SWITCH

  Use an ohmmeter to check switch for continuity.
  If found defective, replace switch.

OFF position (float up)	No continuity
ON position (float down)	Continuity

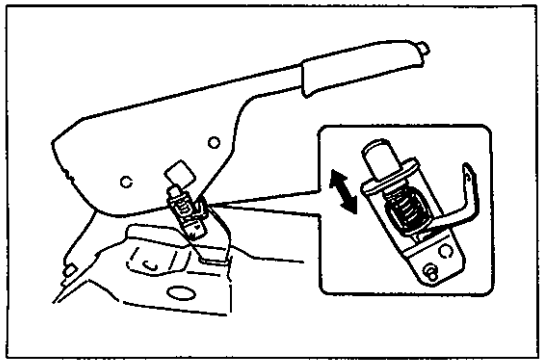

- PARKING BRAKE SWITCH

  Use an ohmmeter to check switch for continuity.
  If found defective, replace switch.

OFF position (parking brake released)	No continuity
ON position (parking brake lever pulled up)	Continuity

SEAT BELT WARNING LIGHT (IF EQUIPPED)

SEAT BELT SWITCH

INSPECTION

Refer to section 10A "SEAT BELT" section.

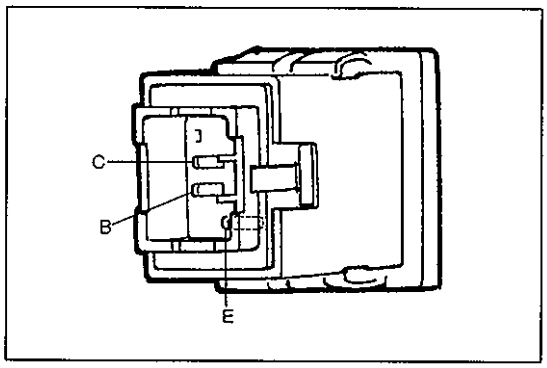

REAR WINDOW DEFOGGER (IF EQUIPPED)

DEFOGGER SWITCH

INSPECTION

Use a circuit tester to check defogger switch for continuity.
If switch has no continuity between terminals, replace.

Terminal / Defogger SW	C	B	E
OFF		○	○
ON	○	○	○

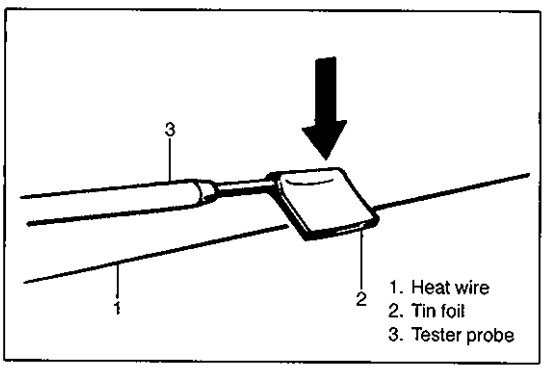

DEFOGGER WIRE

INSPECTION

NOTE:

- **When cleaning rear window glass, use a dry cloth to wipe it along wire direction.**
- **When cleaning glass, do not use detergent or abrassive-containing glass cleaner.**
- **When measuring wire voltage, use a tester with negative probe wrapped with a tin foil which should be held down on wire by finger pressure.**

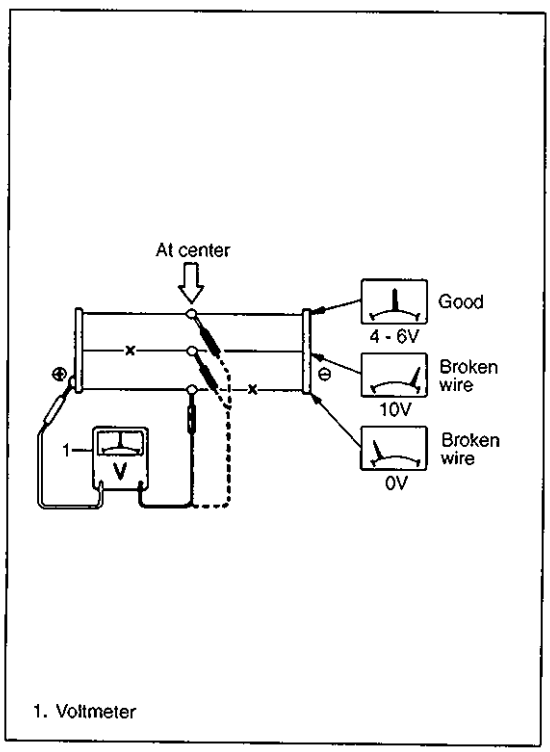

1) Checking wire damage
   a. Turn main switch ON.
   b. Turn defogger switch ON.
   c. Use a voltmeter to check voltage at the center of each heat wire, as shown.

Voltage	Criteria
Approx. 5V	Good (No break in wire)
Approx. 10V or 0V	Broken wire

If measured voltage is 10V, wire must be damaged between its center and positive end. If voltage is zero, wire must be damaged between its center and ground.

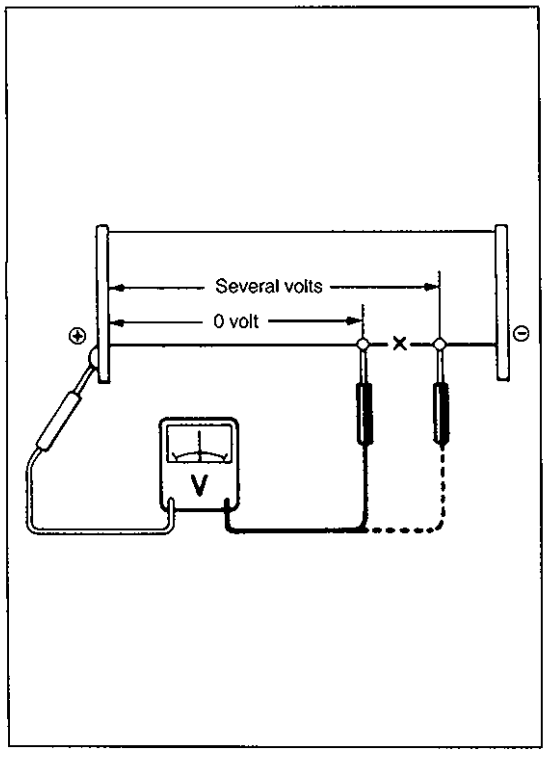

2) Locating damage in wire
   a. Touch voltmeter positive (+) lead to heat wire positive terminal end.
   b. Touch voltmeter negative (–) lead with a foil strip to heat wire positive terminal end, then move it along wire to the negative terminal end.
   c. The place where voltmeter fluctuates from zero to several volts is where there is damage.

NOTE:
If heat wire is free from damage, voltmeter should indicate 12V at heat wire positive terminal end and its indication should decrease gradually toward zero at the other terminal (ground).

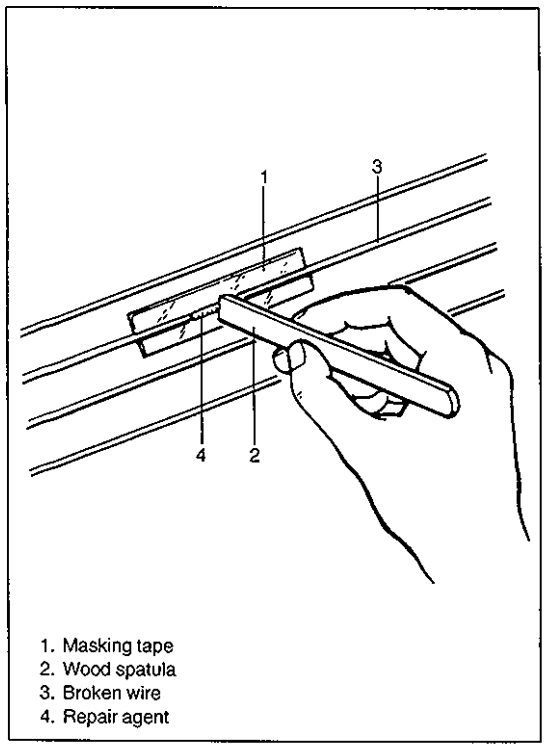

1. Masking tape
2. Wood spatula
3. Broken wire
4. Repair agent

DEFOGGER CIRCUIT

REPAIR

1) Use white gasoline for cleaning.
2) Apply masking tape at both upper and lower sides of heat wire to be repaired.
3) Apply commercially-available repair agent with a fine-tip brush.
4) Two to three minutes later, remove masking tapes previously applied.
5) Leave repaired heat wire as it is for at least 24 hours before operating defogger again.

LH steering vehicle shown

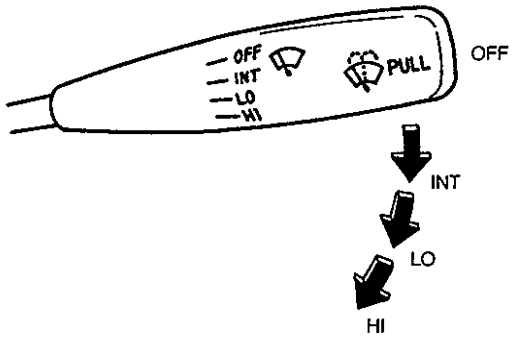

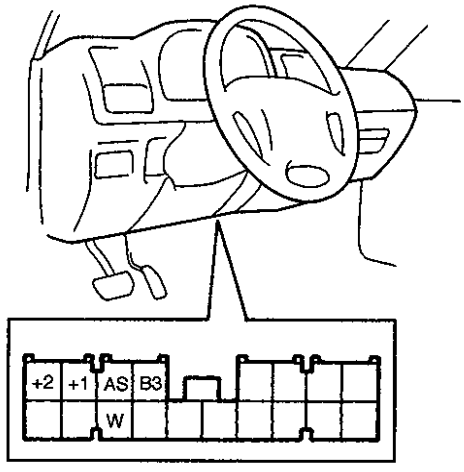

WINDSHIELD WIPERS

FRONT WIPER AND WASHER

FRONT WIPER/WASHER SWITCH

Inspection

1) Disconnect negative cable at battery.
2) Disconnect combination switch lead wire coupler.
3) Use a circuit tester to check the continuity at each switch position as shown below.

Terminal / Wire Color / Wiper SW	B3	+2	+1	As
	Y/Bl	Bl/R	Bl	Bl/W
OFF			○—○	
INT			○—○	
LO	○———○			
HI	○—○			

Terminal / Wire Color / Washer SW	B3	W
	Y/Bl	Bl/B
OFF		
ON	○—○	

Removal and Installation

Refer to COMBINATION SWITCH/CONTACT COIL AND COMBINATION SWITCH ASSEMBLY in Section 3C for details.

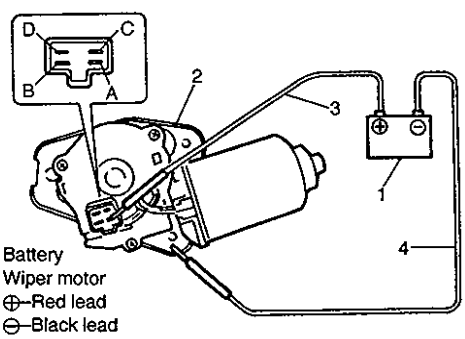

1. Battery
2. Wiper motor
3. ⊕–Red lead
4. ⊖–Black lead

WIPER MOTOR

Inspection

1) As illustrated left, have a 12V battery and connect its (+) terminal to terminal "A", and its (–) terminal to bracket (wiper ground). If motor rotates at a low revolution speed of 44 to 52 rpm, it is proper. As for high speed check, connect battery (+) terminal to terminal "B", and its (–) terminal to bracket (wiper ground). If motor rotates at a high revolution speed of 64 to 78 rpm, it is proper.

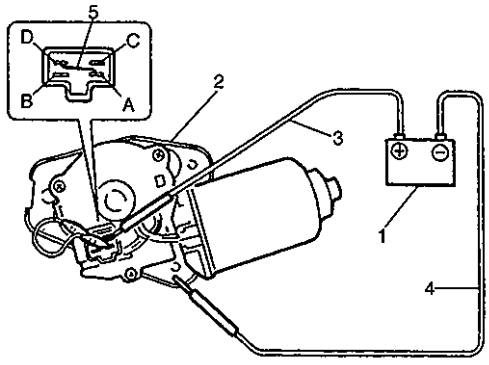

1. Battery
2. Wiper motor
3. ⊕–Red lead
4. ⊖–Black lead
5. Jumper

2) Testing automatic stop action
   a) Connect 12V battery (+) terminal to terminal "A" of wiper motor and (–) terminal to bracket (wiper ground) and let the motor turn.
   b) Disconnect terminal "A" from battery, and let the motor stop.
   c) Connect terminal "A" and "D" with a jumper wire, and connect terminal "C" to battery (+) terminal. Observe the motor turns once again then stops at a given position.
   d) Repeat a) thru c) several times and inspect if the motor stops at the given position every time.

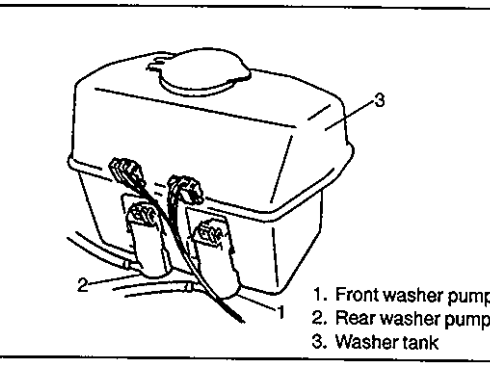

1. Front washer pump
2. Rear washer pump
3. Washer tank

WASHER PUMP

Removal

1) Disconnect battery (–) cable.
2) Remove washer tank fitting screws.
3) Disconnect pump lead wire coupler(s) and hose(s).
4) Remove washer tank.
5) Remove pump from tank.

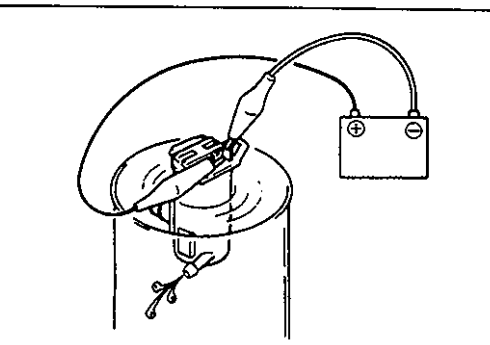

Inspection

Connect battery (+) and (–) terminals to pump (+) and (–) terminals respectively to check pumping rate.
Check for both front and rear washer pump.
Pumping Rate:
Front more than 1.0 l/min (2.1 US pt./min, 1.76 Imp pt./min) Rear more than 1.0 l/min (2.1 US pt./min, 1.76 Imp pt./min)

Installation

Reverse removal procedure for installation.

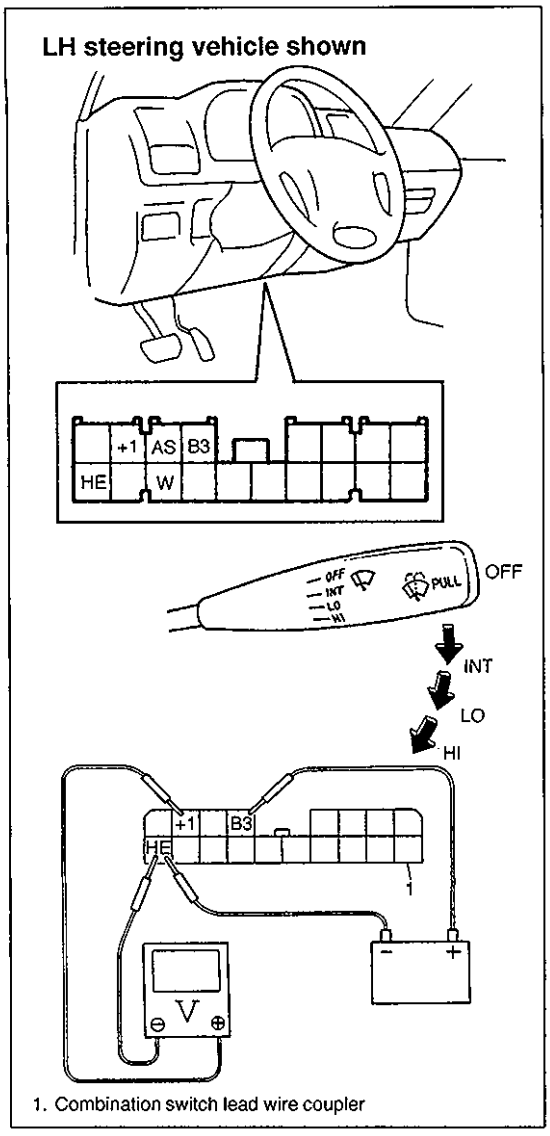

1. Combination switch lead wire coupler

Intermittent Wiper Relay Circuit

1) Disconnect negative cable at battery.
2) Disconnect combination switch lead wire coupler.
3) Turn the front wiper switch to INT position.
4) Connect battery positive terminal to terminal "B3" and battery negative terminal to terminal "HE".
5) Connect voltmeter positive lead to terminal "+1" and negative lead to terminal "HE"
   Check that the voltmeter indicates the battery voltage (10 – 14V).

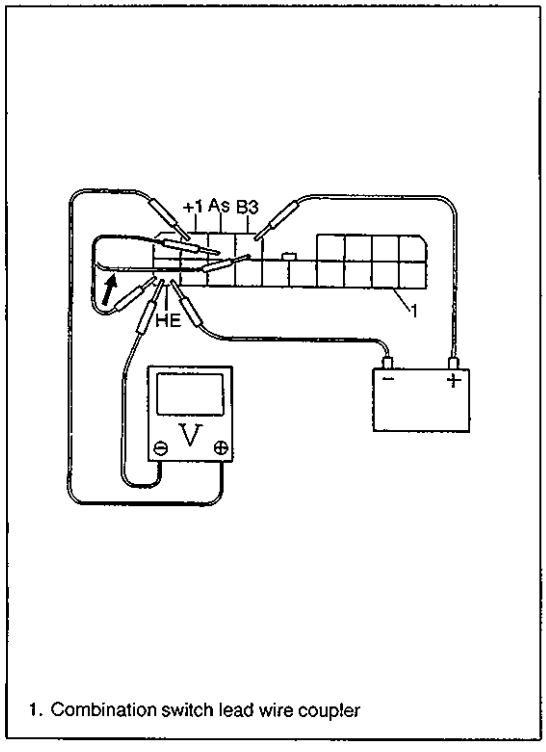

1. Combination switch lead wire coupler

6) Connect terminal "As" and terminal "B3" by a jumper wire. Then connect terminal "B3" end to terminal "HE".
   Observe the voltmeter voltage drops to 0V right after connecting the jumper wire from terminal "B3" to "HE". Then the voltage rises to battery voltage (10 – 14 V) within the time shown below.

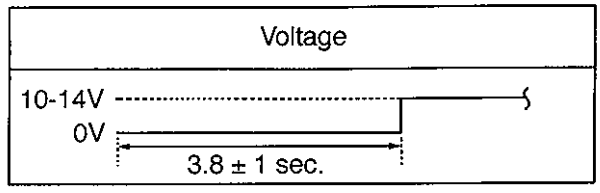

LH steering vehicle shown

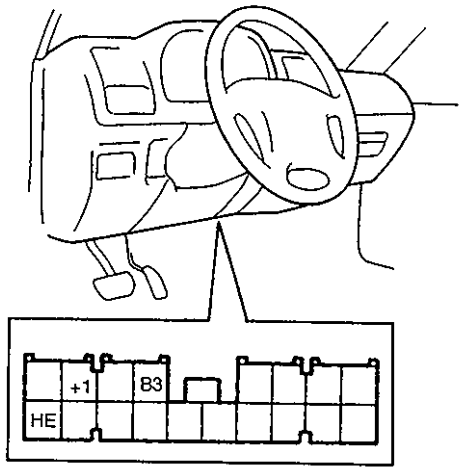

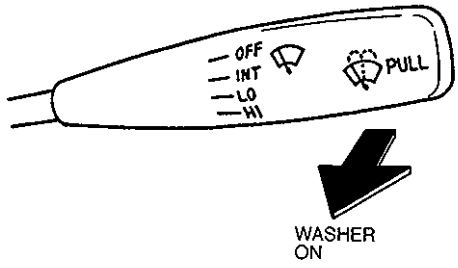

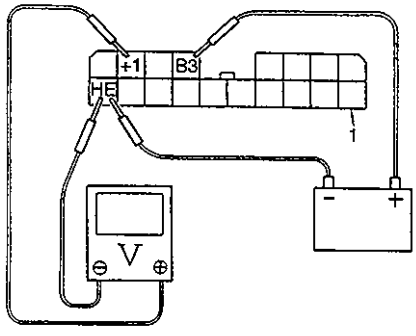

1. Combination switch lead wire coupler

Washer Linked Operation

1) Disconnect negative cable at battery.
2) Disconnect combination switch lead wire coupler.
3) Make sure that front wiper switch is at OFF position.
4) Connect battery positive terminal to terminal "B3" and battery negative terminal to terminal "HE".
5) Connect voltmeter positive lead to terminal "+1" and negative lead to terminal "HE".
6) Push washer switch check that voltage changes as shown in the table.

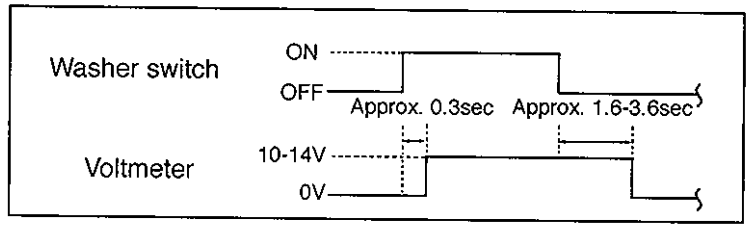

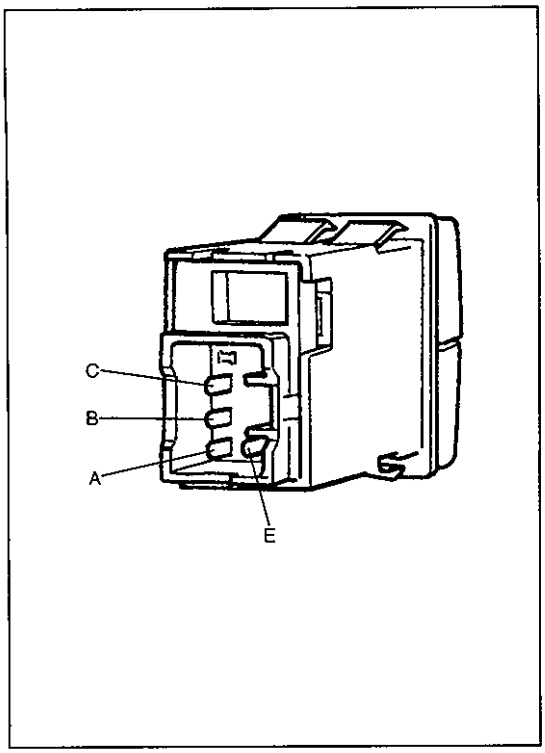

REAR WIPER AND WASHER (IF EQUIPPED)

INSPECTION

A. Wiper And Washer Switches

Use a circuit tester to check switches for continuity.

Wiper & Washer SW	Wiper SW	Terminal A	Terminal B	Terminal C	Terminal E
OFF	OFF		○—○		
	ON	○—○			
Washer ON	OFF	○			○
	ON	○	○		○
ON	OFF	○	○		○
	ON	○	○		○

B. Washer Pump

Refer to FRONT WIPER AND WASHER INSPECTION in this section.

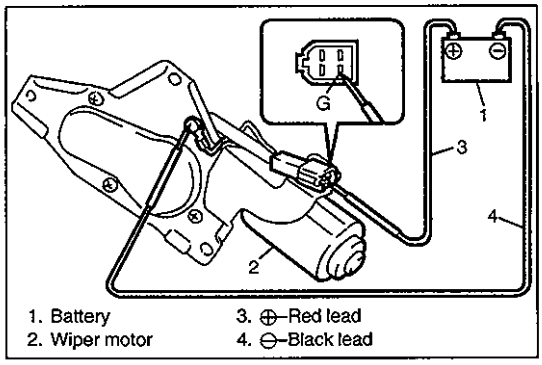

1. Battery
2. Wiper motor
3. ⊕–Red lead
4. ⊖–Black lead

C. Wiper Motor

1) TESTING WIPER MOTOR

As shown left, use a 12V battery to connect its (+) and (–) terminals to terminal "G" and Black lead wire respectively. Then motor should rotate at 35 to 45 rpm.

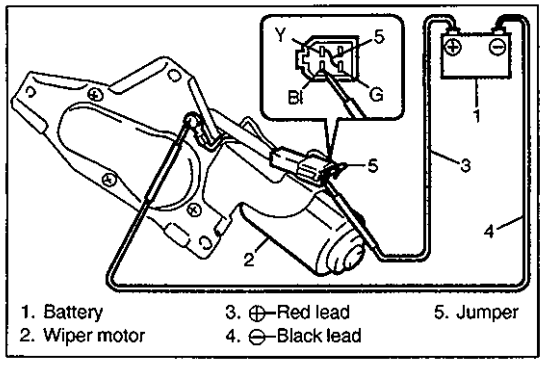

1. Battery
2. Wiper motor
3. ⊕–Red lead
4. ⊖–Black lead
5. Jumper

2) TESTING AUTOMATIC STOP ACTION

a) First, connect battery (+) terminal to terminal "G" and battery (–) terminal to black lead wire and let the motor turn.
b) Then disconnect terminal "G" from battery and let the motor stop.
c) Next connect terminal "G" and terminal "Y" with a jumper wire and connect terminal "Bl" to battery (+) terminal. Observe the wiper motor turns once again, then stops at a given position.
d) Repeat these steps several times, and inspect if the motor stops at the given position every time.

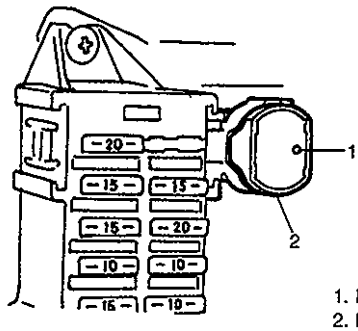

1. Hole
2. Breaker

POWER WINDOW CONTROL SYSTEM (IF EQUIPPED)

INSPECTION

Breaker

- When the breaker has worked, insert a pin in the hole indicated in the figure and push it until a click is heard.
- If the system fails to operate properly, replace the breaker.

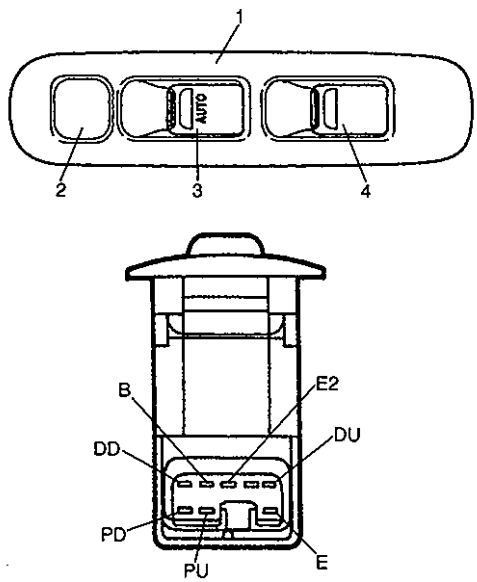

1. Power window main switch
2. Power window lock switch
3. Driver side window switch
4. Passenger side window switch

Power Window Main Switch

Inspect switch continuity between terminals.

Switch Position			Driver Side Window Switch				Passenger Side Window Switch			
Terminal			B	E	DU	DD	B	E	PU	PD
Power Window Lock Switch	OFF	UP	○		○		○		○	
						○				○
		OFF		○	○			○	○	
				○		○		○		○
		DOWN	○			○	○			○
				○	○			○	○	
	ON	UP	○		○		○		○	
				○		○				
		OFF		○	○				○	○
				○		○				
		DOWN	○			○	○			○
				○	○					

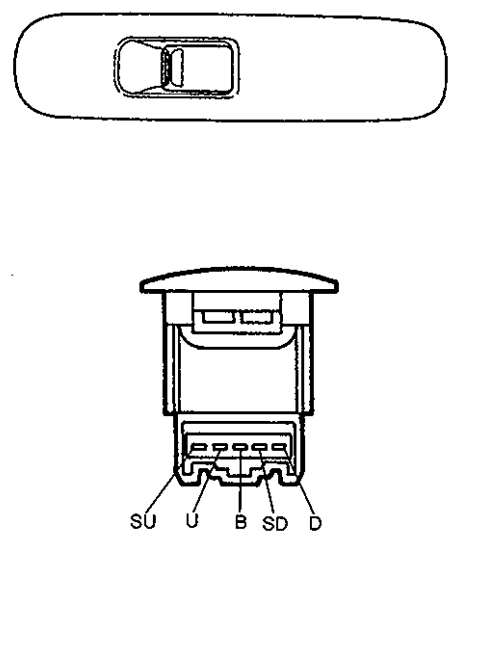

Power Window Sub Switch

Inspect switch continuity between terminal.

Switch Position \ Terminal	B	SD	SU	D	U
UP		○		○	
	○				○
OFF		○		○	
			○		○
DOWN	○			○	
			○		○

LH steering vehicle shown

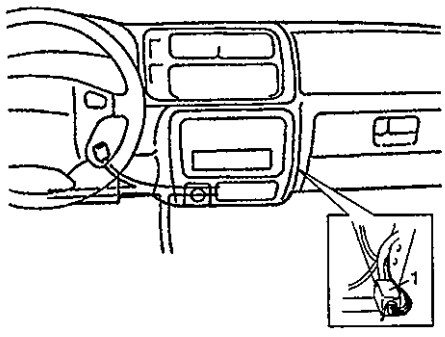

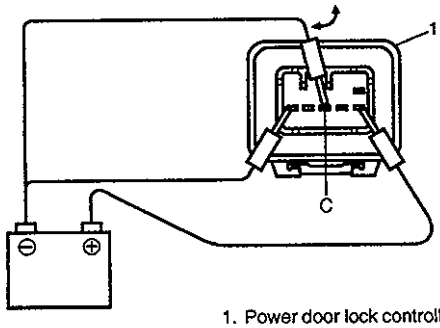

1. Power door lock controller

POWER DOOR LOCK SYSTEM

INSPECTION

Power Door Lock Controller

Remove door lock controller from vehicle. Disconnect coupler from door lock controller. Connect door lock controller terminal to 12V battery as shown.

If operation sound (click) can be heard when terminal "C" is grounded and terminal "C" is released from battery (–) terminal, the controller is in good condition.

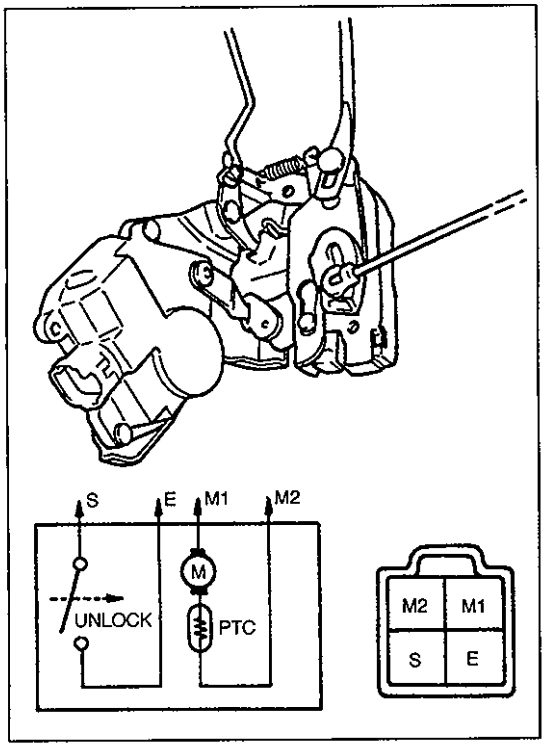

KEY CYLINDER SWITCH (Drivers side)

Inspect continuity at terminals according to the key action.

Key \ Terminal	S	E
LOCK		
UNLOCK	○	○

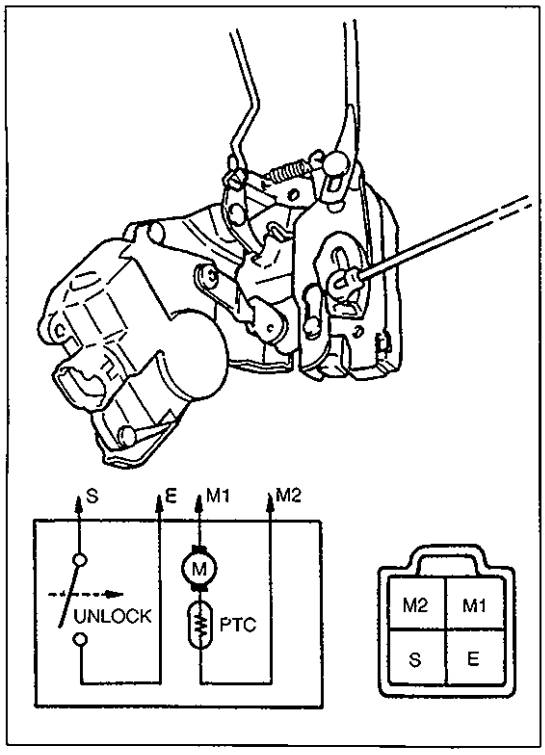

POWER DOOR LOCK ACTUATOR

1) Disconnect power door lock actuator coupler.
2) Connect 12V battery positive and negative terminals to the door lock actuator terminals shown below.
   If it does not follow the table's operation, replace the faulty door lock actuator.

Front Door

Operation / Terminal	UNLOCK		LOCK	
	R	L	R	L
M1	⊕	⊖	⊖	⊕
M2	⊖	⊕	⊕	⊖

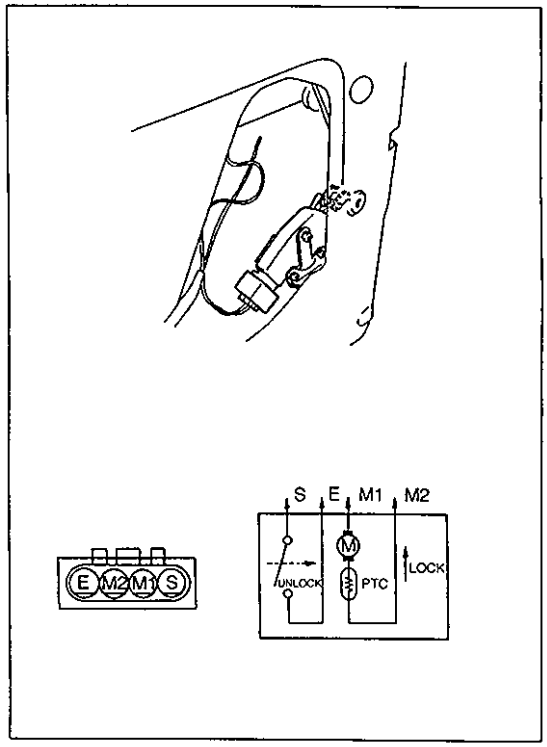

Back Door

Operation / Terminal	UNLOCK	LOCK
M1	⊖	⊕
M2	⊕	⊖

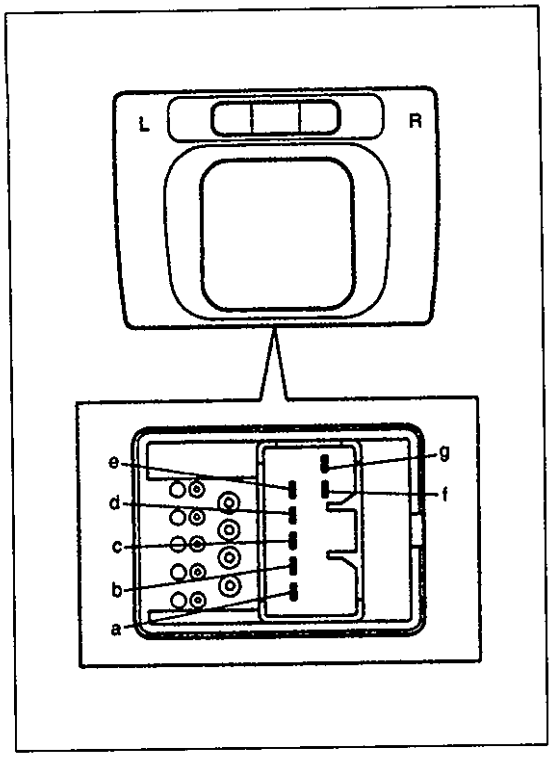

POWER DOOR MIRROR CONTROL SYSTEM

INSPECTION

MIRROR SWITCH

1) Remove mirror switch from instrument panel.
2) Check continuity at each switch position by using a circuit test.
   If any continuity is not obtained, replace mirror switch.

L / R	a	b	c	d / e	g / f
UP	○	○	○		○
DOWN	○	○	○		○
LEFT	○	○	○	○	
RIGHT	○	○	○	○	

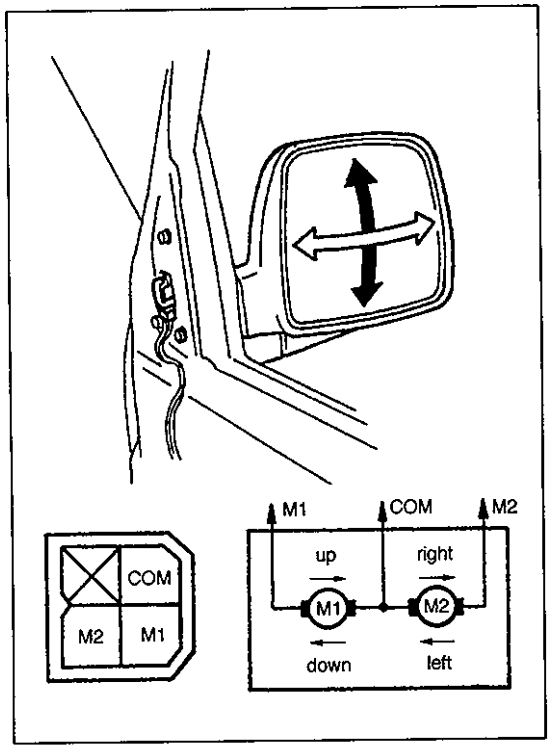

DOOR MIRROR ACTUATOR

1) Remove garnish from door.
2) Disconnect door mirror coupler.
3) Check that door mirror operates properly when battery voltage is applied to connector terminals.
   Connect battery positive and negative terminal to the door mirror terminal shown below.
   If it does not follow the table's operation, replace door mirror assembly.

Operation \ Terminal	COM	M1	M2
Up	⊖	⊕	
Down	⊕	⊖	
Left	⊖		⊕
Right	⊕		⊖

NOTE:
When installing door mirror to door, be careful not to pinch harness between door and door mirror.

SECTION 8G

IMMOBILIZER CONTROL SYSTEM (IF EQUIPPED)

WARNING:
For vehicles equipped with Supplemental Restraint (Air Bag) System

- **Service on and around the air bag system components or wiring must be performed only by an authorized SUZUKI dealer. Refer to "Air Bag System Components and Wiring Location View" under "General Description" in air bag system section in order to confirm whether you are performing service on or near the air bag system components or wiring. Please observe all WARNINGS and "Service Precautions" under "On-Vehicle Service" in air bag system section before performing service on or around the air bag system components or wiring. Failure to follow WARNINGS could result in unintentional activation of the system or could render the system inoperative. Either of these two conditions may result in severe injury.**
- **Technical service work must be started at least 90 seconds after the ignition switch is turned to the "LOCK" position and the negative cable is disconnected from the battery. Otherwise, the system may be activated by reserve energy in the Sensing and Diagnostic Module (SDM).**

CONTENTS

GENERAL DESCRIPTION 8G- 2
DIAGNOSIS 8G- 4
Precautions in Diagnosing Troubles 8G- 4
Diagnostic Flow Table 8G- 4
Diagnostic Trouble Code Table 8G- 6
TABLE A DTC is not Output from Diagnostic Output Terminal 8G- 7
DTC11 Transponder Code Not Matched . 8G- 8
DTC31 Transponder Code Not Registered 8G- 8
DTC12 Fault in Immobilizer Control Module 8G- 8
DTC13 No Transponder Code Transmitted or Coil Antenna Opened/Shorted 8G- 9
DTC21 ECM/Immobilizer Control Module Code Not Matched (Immobilizer Control Module Side) 8G-11
DTC81 ECM/Immobilizer Control Module Code Not Matched (ECM Side) 8G-11
DTC84 ECM/Immobilizer Control Module Code Not Registered 8G-11
DTC 82 Fault in ECM 8G-11
DTC22 Ignition Switch Circuit Open/Short 8G-12
DTC23 No ECM/Immobilizer Control Module Code Transmitted from ECM or DLC Circuit Opened/Shorted 8G-13
DTC83 No ECM/Immobilizer Control Module Code Transmitted from Immobilizer Control Module or DLC Circuit Opened/Shorted 8G-13
Inspection of ECM, Immobilizer Control Module and its Circuit 8G-14
ON-VEHICLE SERVICE 8G-15
Precautions in Handling Immobilizer Control System 8G-15
Immobilizer Control Module 8G-16
Coil Antenna 8G-16
HOW TO REGISTER IGNITION KEY 8G-17
PROCEDURE AFTER IMMOBILIZER CONTROL MODULE REPLACEMENT 8G-18
PROCEDURE AFTER ECM REPLACEMENT 8G-19
SPECIAL TOOLS 8G-19

GENERAL DESCRIPTION

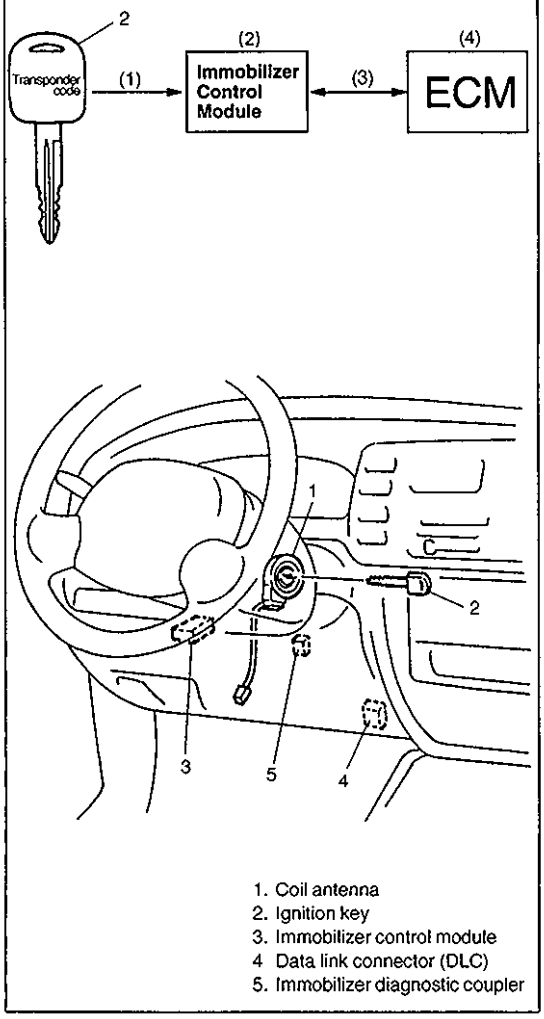

1. Coil antenna
2. Ignition key
3. Immobilizer control module
4 Data link connector (DLC)
5. Immobilizer diagnostic coupler

The immobilizer control system designed to prevent vehicle burglar consists of following components.

- Engine control module (ECM)
- Immobilizer control module
- Ignition key (with built-in transponder)
- Coil antenna

Operation of this system is as follows.

(1) Each ignition key has its own code (Transponder code) stored in memory. When the ignition switch is turned ON, Immobilizer Control Module tries to read the Transponder code through the coil antenna installed to the steering lock assembly.

(2) Immobilizer Control Module compares the Transponder code read in (1) and that registered in Immobilizer Control Module and checks if they match.

(3) When it is confirmed that two Transponder codes match each other as described above, Immobilizer Control Module and ECM check if ECM/Immobilizer Control Module codes registered in them respectively match.

(4) Only when it is confirmed that ECM/Immobilizer Control Module codes match, the engine starts running. If Transponder codes in Step (2) or ECM/Immobilizer Control Module codes in Step (3) do not match, ECM will stop operation of the injector and ignition of spark plug.

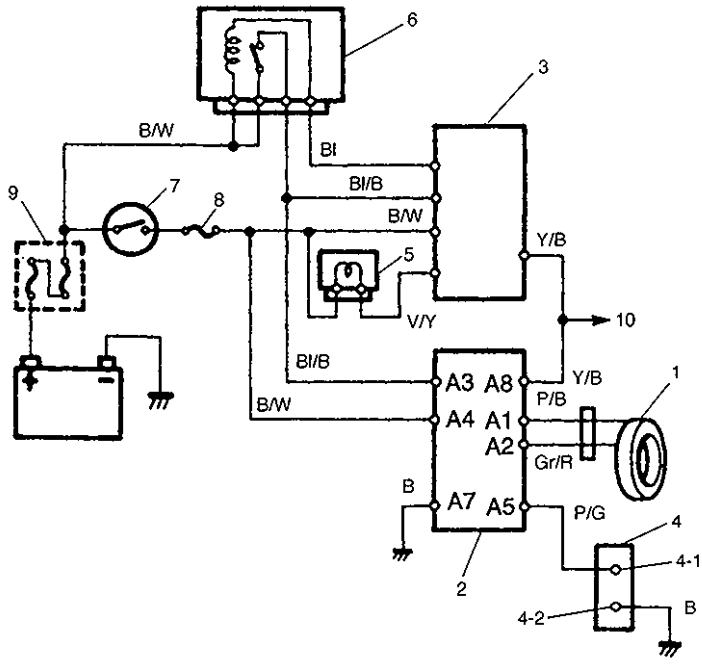

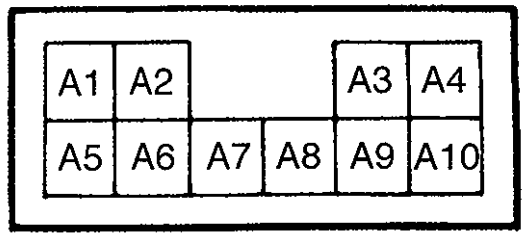

Terminal arrangement of Immobilizer Control Module coupler (Viewed from harness side)

1. Coil antenna
2. Immobilizer Control Module
3. ECM
4. Immobilizer diagnostic coupler
4-1. Diagnostic output terminal
4-2. Ground terminal
5. Malfunction indicator lamp ("CHECK ENGINE" light)
6. Main relay
7. Ignition switch
8. Fuse
9. Main fuse
10. To Data link connector

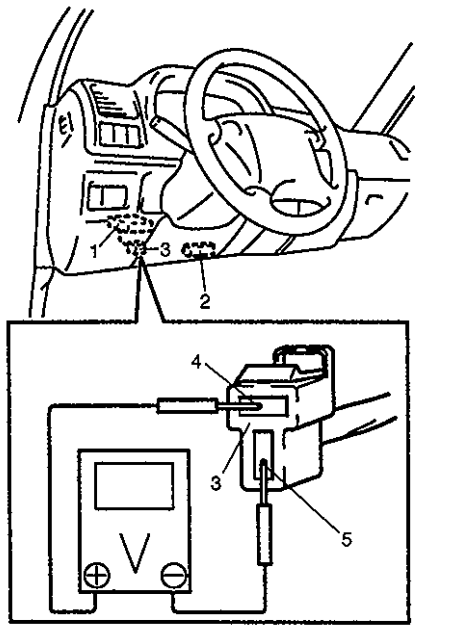

1. Immobilizer control module
2. DLC (Data link connector)
3. Immobilizer diagnostic coupler
4. Diagnostic output terminal
5. Ground terminal

For Immobilizer Control Module

With the ignition switch turned ON, Immobilizer Control Module outputs the result (Diagnostic trouble code (DTC)) of diagnosing the above area through the diagnostic output terminal of the immobilizer diagnostic coupler. This can be read by checking deflection of the voltmeter indicator as it deflects when the positive probe and the negative probe of the voltmeter are connected to the diagnostic output terminal and the ground terminal respectively.

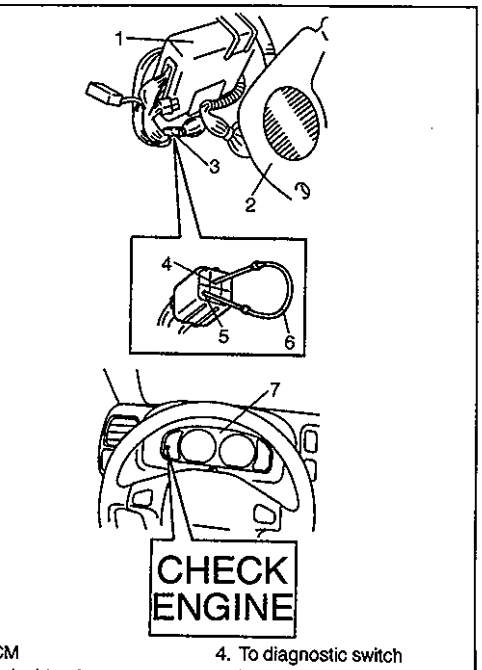

1. ECM
2. Dash side trim
3. Monitor coupler
4. To diagnostic switch
5. To ground terminal
6. Service wire
7. Speedometer

For ECM

With the ignition switch turned ON and the diagnostic switch terminal grounded, ECM outputs the result (Diagnostic trouble code (DTC)) of diagnosing above area of the immobilizer control system and the result (Diagnostic trouble code) of the electronic fuel injection system by flashing the malfunction indicator lamp ("CHECK ENGINE" light).

NOTE:

When a trouble exists in the immobilizer control system (when Immobilizer Control Module or ECM detects a diagnostic trouble code (DTC)), ECM will stop operation of the injector and ignition of spark plug.

DIAGNOSIS

PRECAUTIONS IN DIAGNOSING TROUBLES

PRECAUTIONS IN IDENTIFYING DIAGNOSTIC TROUBLE CODE

ECM

- Before identifying diagnostic trouble code indicated by malfunction indicator lamp ("CHECK ENGINE" light), don't disconnect couplers from ECM, battery cable from battery, ECM ground wire harness from engine. Such disconnection will clear trouble codes for electronic fuel injection system stored in memory of ECM.
- If abnormality or malfunction lies in two or more areas, malfunction indicator lamp ("CHECK ENGINE" light) indicates applicable codes three times each.
  And flashing of these codes is repeated as long as diagnosis terminal is grounded and ignition switch is held at ON position.
- When ECM detects a trouble in both electronic fuel injection system and immobilizer control system, malfunction indicator lamp ("CHECK ENGINE" light) indicates trouble codes of both systems alternately while the ignition switch is turned ON and the diagnosis terminal is grounded.
- Take a note of diagnostic trouble code indicated first.

Immobilizer Control Module

- Take a note of diagnostic trouble code indicated first.

PRECAUTION AFTER REPLACING ECM OR IMMOBILIZER CONTROL MODULE

- When ECM was replaced, including when replaced because rechecking by using a known-good ECM was necessary during trouble diagnosis, the ECM/Immobilizer Control Module code must be registered in ECM and Immobilizer Control Module by performing procedure described in "Procedure After ECM Replacement" on p.8G-19. If it is not registered, the engine would not start and accurate trouble diagnosis would not be assured.
- When Immobilizer Control Module was replaced, including when replaced because rechecking by using a known-good Immobilizer Control Module was necessary during trouble diagnosis, the Transponder code and ECM/Immobilizer Control Module code must be registered in Immobilizer Control Module and ECM/Immobilizer Control Module code in ECM by performing procedure described in "Procedure After Immobilizer Control Module Replacement" on p.8G-18. If they are not registered, the engine would not start and accurate trouble diagnosis would not be assured.

[NOTES ON SYSTEM CIRCUIT INSPECTION]

Refer to "Precautions for Electrical Circuit Service" and "Intermittents And Poor Connection" in SECTION 0A.

DIAGNOSTIC FLOW TABLE

STEP	ACTION	YES	NO
1	1) Make sure that diagnosis switch terminal for electronic Fuel Injection System is not grounded by service wire. See Fig.1. 2) Check malfunction indicator lamp ("CHECK ENGINE" light) while ignition switch is ON (but without starting engine). See Fig. 2. Does malfunction indicator lamp flash?	Go to Step 3 on the next page.	• If malfunction indicator lamp remains ON, go to Step 2. • If malfunction indicator lamp remains OFF, go to "Malfunction Indicator Lamp Check" in SECTION 6.

STEP	ACTION	YES	NO
2	Using service wire, ground diagnosis switch terminal for Electronic Fuel Injection System. See Fig. 3. Does malfunction indicator lamp ("CHECK ENGINE" light) flash?	Immobilizer control system is in good condition.	Go to "Malfunction Indicator Lamp Check" in SECTION 6.
3	Does malfunction indicator lamp ("CHECK ENGINE" light) flash as Fig. 4.	Go to Step 4.	Go to "Malfunction Indicator Lamp Check" in SECTION 6.
4	1) Connect positive probe of analog type voltmeter to diagnostic output terminal of immobilizer diagnostic coupler and negative probe to ground of immobilizer diagnostic coupler with ignition switch turned ON. See Fig. 5. 2) Is it possible to read diagnostic trouble code (DTC) by checking deflection of voltmeter indicator? (Refer to Immobilizer Control Module side in "Diagnostic Trouble Code Table".)	• If deflection of voltmeter indicates "No code", go to Step 5. • If deflection of voltmeter indicates DTC No., go to flow table for DTC No.	Go to table A.
5	Using service wire, ground diagnosis switch terminal for Electronic Fuel Injection System. See Fig. 3. Is there diagnostic trouble code (DTC) for immobilizer control system? (Refer to ECM side in "Diagnostic Trouble Code Table".)	Go to flow table for DTC No.	Substitute a known-good ECM and recheck. **NOTE:** **After replacing with a known-good ECM, register ECM /Immobilizer Control Module code in ECM by performing procedure described in "Procedure After ECM Replacement".**

Fig. 1 for Step 1

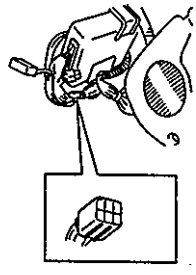

Fig. 2 for Step 1

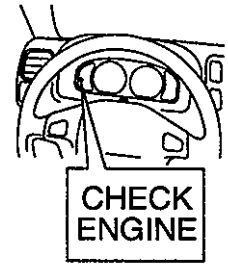

Fig. 3 for Step 2 and Step 5

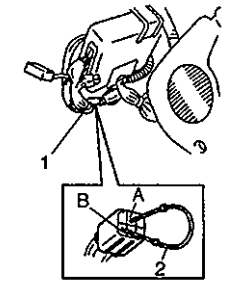

1. Monitor coupler
2 Service wire
A: Diagnosis switch terminal
B: Ground terminal

Fig. 4 for Step 3

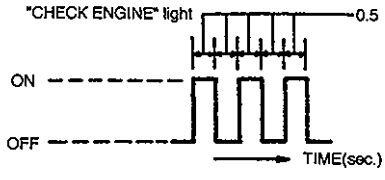

Fig. 5 for Step 4

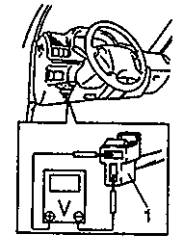

1. Immobilizer diagnostic coupler

DIAGNOSTIC TROUBLE CODE TABLE

For Immobilizer Control Module

EXAMPLE: • COIL ANTENNA FAILURE (CODE NO. 13)

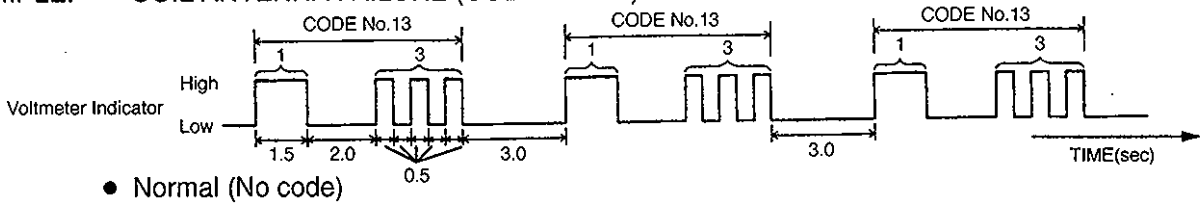

• Normal (No code)

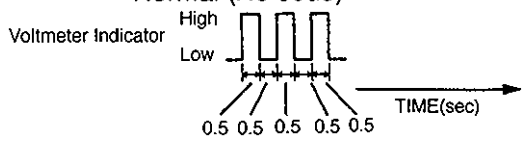

DIAGNOSTIC TROUBLE CODE		DIAGNOSTIC AREA	DIAGNOSIS
No.	VOLTMETER INDICATION		
—		Normal (No code)	This code appears when none of the other codes are identified.
11	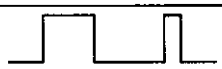	Transponder code	Diagnose trouble according to "Diagnostic Flow Table" corresponding to each code No.
31	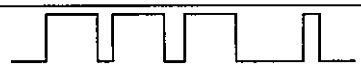		
12		Immobilizer Control Module	
13		Coil antenna or ignition key with built-in transponder	
21	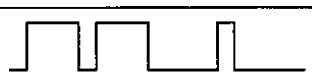	ECM/Immobilizer Control Module code	
22		Ignition switch circuit	
23		Serial data link circuit	

For ECM

To learn how to read diagnostic trouble code (DTC) from flashing of malfunction indicator lamp ("CHECK ENGINE" light), refer to SECTION 6E.

DIAGNOSTIC TROUBLE CODE		DIAGNOSTIC AREA	DIAGNOSIS
No.	MALFUNCTION INDICATOR lamp ("CHECK ENGINE" light) INDICATION		
12	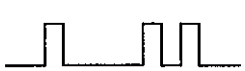	Normal	This code appears when it is confirmed that none of other trouble codes is set for immobilizer control system or electronic fuel injection system.
81	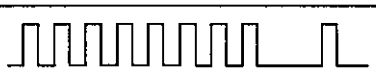	ECM/Immobilizer Control Module code	Diagnose trouble according to "Diagnostic Flow Table" corresponding to each code No.
84			
82		ECM	
83		Serial data link circuit	

TABLE A DTC IS NOT OUTPUT FROM DIAGNOSTIC OUTPUT TERMINAL

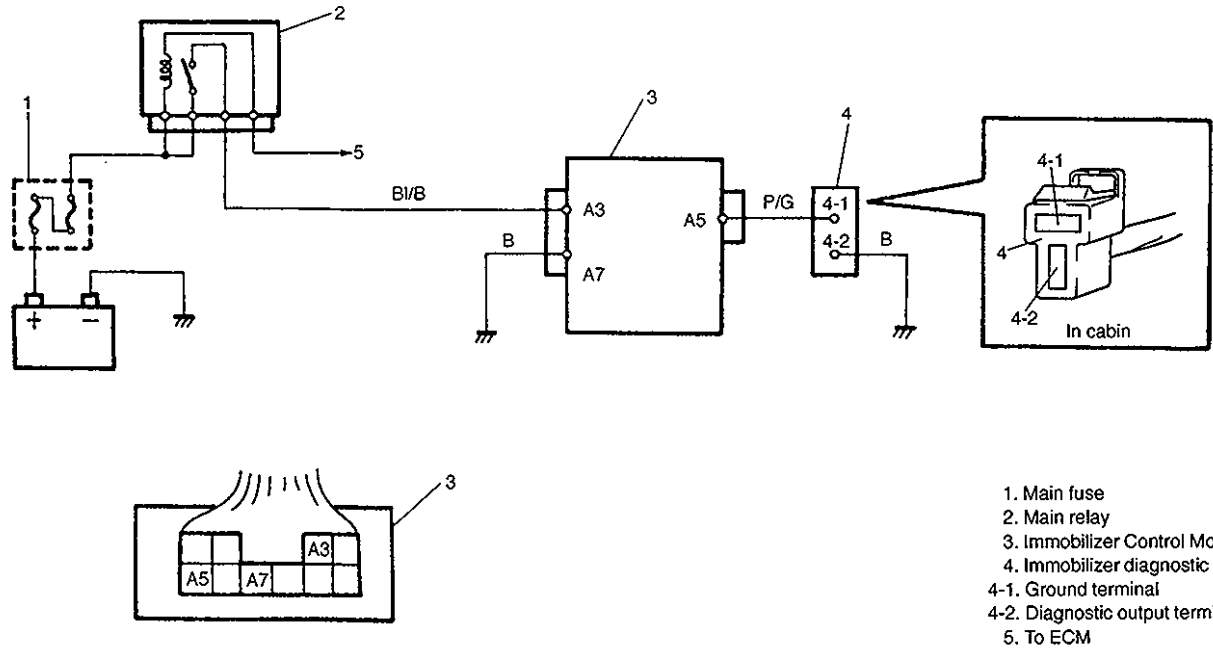

1. Main fuse
2. Main relay
3. Immobilizer Control Module
4. Immobilizer diagnostic coupler
4-1. Ground terminal
4-2. Diagnostic output terminal
5. To ECM

STEP	ACTION	YES	NO
1	Check voltage between A3 terminal and body ground with ignition switch turned ON. Is it 10 – 14V?	Go to Step 2.	"Bl/B" wire open.
2	1) Connect voltmeter between A5 terminal and body ground. 2) Does voltmeter indicator deflect?	Go to Step 3.	• Poor A3, A5 or A7 connection. • "B" wire of A7 terminal open. • "P/G" wire between A5 terminal and diagnostic output terminal of immobilizer diagnostic coupler short. If wire and connections are OK, substitute a known-good Immobilizer Control Module and recheck. **NOTE:** **After replacing with a known-good Immobilizer Control Module, register ECM/Immobilizer Control Module code in ECM and Transponder code and ECM/Immobilizer Control Module code in Immobilizer Control Module by performing procedure described in "Procedure After Immobilizer Control Module Replacement".**
3	1) Connect voltmeter between diagnostic output terminal of immobilizer diagnostic coupler and body ground. 2) Is it possible to read DTC by checking deflection of voltmeter indicator?	"B" wire of ground terminal for immobilizer diagnostic coupler open.	"P/G" wire between A5 terminal and diagnostic output terminal of immobilizer diagnostic coupler open.

DTC11 TRANSPONDER CODE NOT MATCHED

DESCRIPTION:

Immobilizer Control Module checks if Transponder code transmitted from ignition key and that registered in Immobilizer Control Module match when ignition switch is ON. If they do not, this DTC is set.

INSPECTION:

Register ignition key with built-in transponder by using SUZUKI scan tool and performing following steps.

1) Register Transponder code in Immobilizer Control Module by performing procedure described in "How To Register Ignition Key".
2) Turn ignition switch OFF, then turn it ON and check that DTC11 is not set.

DTC31 TRANSPONDER CODE NOT REGISTERED

DESCRIPTION:

Immobilizer Control Module checks if Transponder code transmitted from ignition key and that registered in Immobilizer Control Module match when ignition switch is ON. If there is no Transponder code registered in Immobilizer Control Module, this DTC is set.

INSPECTION:

Register ignition key with built-in transponder by using SUZUKI scan tool and performing following steps.

1) Register Transponder code in Immobilizer Control Module by performing procedure described in "How To Register Ignition Key".
2) Turn ignition switch OFF, then turn it ON and check that DTC31 is not set.

DTC12 FAULT IN IMMOBILIZER CONTROL MODULE

DESCRIPTION:

This DTC is set when an internal fault is detected in Immobilizer Control Module.

INSPECTION:

STEP	ACTION	YES	NO
1	1) Ignition switch "OFF". 2) Disconnect connectors from Immobilizer Control Module. 3) Check for proper connection to Immobilizer Control Module at all terminals. Are they in good condition?	Substitute a known-good Immobilizer Control Module and recheck. **NOTE:** **After replacing with a known-good Immobilizer Control Module, register ECM/Immobilizer Control Module code in ECM and Transponder code and ECM/Immobilizer Control Module code in Immobilizer Control Module by performing procedure described in "Procedure After Immobilizer Control Module Replacement".**	Repair or replace.

DTC13 NO TRANSPONDER CODE TRANSMITTED OR COIL ANTENNA OPENED/SHORTED (Page 1 of 2)

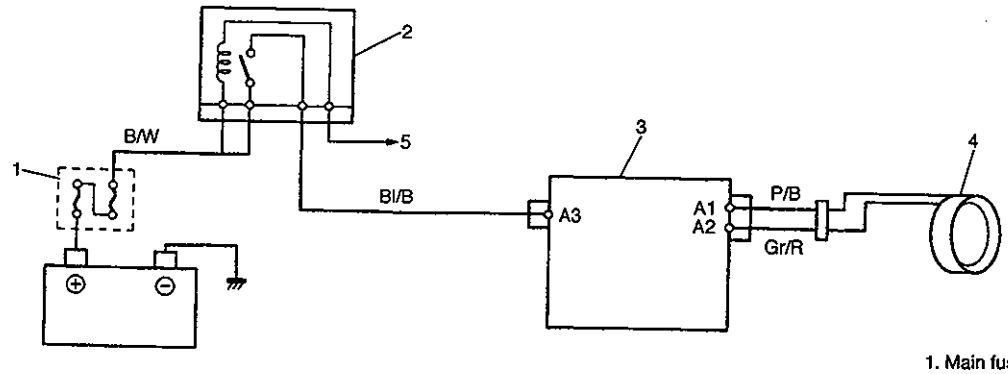

1. Main fuse
2. Main relay
3. Immobilizer Control Module
4. Coil antenna
5. To ECM

DESCRIPTION:

Immobilizer Control Module energizes the coil antenna when the ignition switch is ON and reads Transponder code from the ignition key. When Immobilizer Control Module cannot read Transponder code from the ignition key even when the coil antenna is energized, this DTC is set.

INSPECTION:

STEP	ACTION	YES	NO
1	Does ignition key being used have built-in transponder? (See Fig. 1)	Go to Step 2.	Replace ignition key with built-in transponder and follow "Diagnostic Flow Table" again.
2	1) Disconnect coil antenna coupler with ignition switch turned OFF. 2) Is there continuity between coil antenna coupler terminals A and B? (See Fig. 2)	Go to Step 3.	Coil antenna open.
3	Measure resistance between terminals of coil antenna coupler and body ground. (See Fig. 3) Is it ∞ (infinity) Ω?	Go to Step 4.	Coil antenna shorted to ground.
4	1) With coil antenna coupler disconnected, disconnect Immobilizer Control Module coupler. 2) Measure resistance between coil antenna terminals of Immobilizer Control Module coupler. (See Fig. 4) Is it ∞ (infinity) Ω?	Go to Step 5.	"P/B" wire shorted to "Gr/R" wire.
5	Measure resistance between terminal A1 of Immobilizer Control Module coupler and body ground. (See Fig. 5) Is it ∞ (infinity) Ω?	Go to Step 6.	"P/B" wire shorted to ground.
6	Measure resistance between terminal A2 of Immobilizer Control Module coupler and body ground. (See Fig. 6) Is it ∞ (infinity) Ω?	Go to Step 7.	"Gr/R" wire shorted to ground.
7	1) Connect coil antenna coupler. 2) Is there continuity between Immobilizer Control Module coupler terminals A1 and A2? (See Fig. 7)	Go to Step 8.	• "P/B" or "Gr/R" wire open • Poor coil antenna-to-coupler

DTC13 NO TRANSPONDER CODE TRANSMITTED OR COIL ANTENNA OPENED/SHORTED (Page 2 of 2)

STEP	ACTION	YES	NO
8	1) If connections are OK, connect Immobilizer Control Module coupler and substitute a known-good coil antenna. 2) Is DTC 13 also indicated with ignition switch turned ON?	Go to Step 9.	Faulty coil antenna.
9	Is DTC 13 still indicated even when another ignition key (with built-in transponder) for that vehicle used?	Substitute a known-good Immobilizer Control Module and recheck. **NOTE:** **After replacing with a known-good Immobilizer Control Module, register ECM/Immobilizer Control Module code in ECM and Transponder code and ECM/Immobilizer Control Module code in Immobilizer Control Module by performing procedure described in "Procedure After Immobilizer Control Module Replacement".**	Faulty transponder.

Fig. 1 for step 1

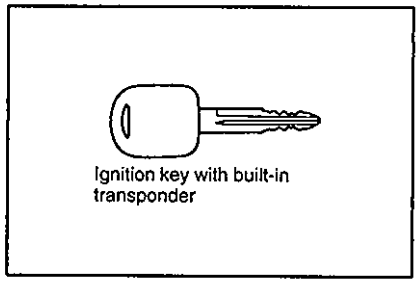

Fig. 2 for step 2

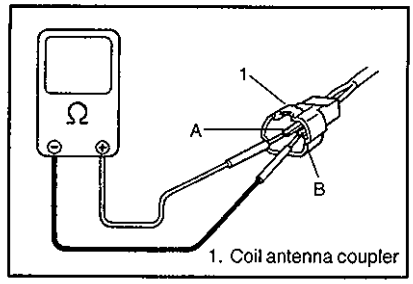

Fig. 3 for step 3

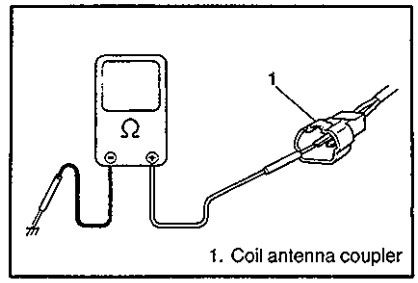

Fig. 4 for step 4

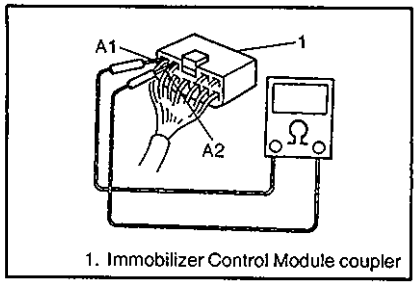

Fig. 5 for step 5

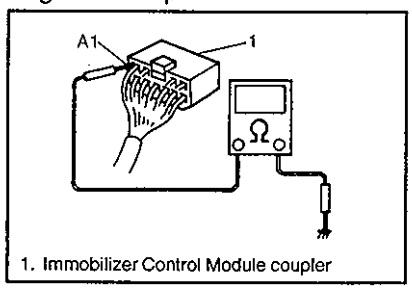

Fig. 6 for step 6

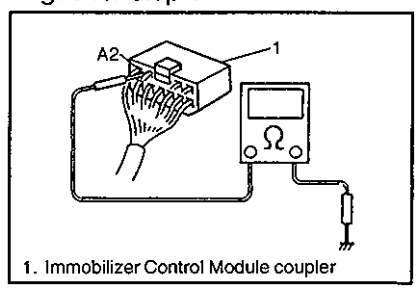

Fig. 7 for step 7

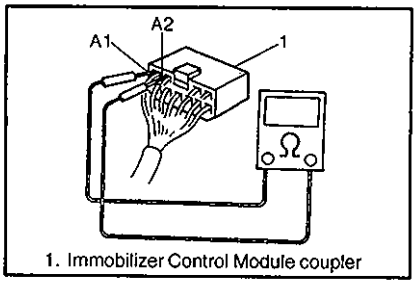

DTC21 ECM/IMMOBILIZER CONTROL MODULE CODE NOT MATCHED (IMMOBILIZER CONTROL MODULE SIDE)

DTC81 ECM/IMMOBILIZER CONTROL MODULE CODE NOT MATCHED (ECM SIDE)

DTC84 ECM/IMMOBILIZER CONTROL MODULE CODE NOT REGISTERED

DESCRIPTION:

- DTC21
  Immobilizer Control Module checks if ECM/Immobilizer Control Module code transmitted from ECM and that registered in Immobilizer Control Module match when ignition switch is ON. If they do not, this DTC is set.
- DTC81
  ECM checks if ECM/Immobilizer Control Module code transmitted from Immobilizer Control Module and that registered in ECM match when ignition switch is ON. If they do not, this DTC is set.
- DTC84
  ECM checks if code transmitted from Immobilizer Control Module and that registered in ECM match when ignition switch is ON. If there is no ECM/Immobilizer Control Module code registered in ECM, this DTC is set.

INSPECTION:

Perform procedure described in "Procedure After ECM Replacement".

DTC82 FAULT IN ECM

DESCRIPTION:

This DTC is set when an internal fault is detected in ECM.

INSPECTION:

STEP	ACTION	YES	NO
1	1) Ignition switch "OFF". 2) Disconnect connectors from ECM. 3) Check for proper connection to ECM at all terminals. Are they in good condition?	Substitute a known-good ECM and re-check. **NOTE:** **After replacing with a known-good ECM, register ECM/Immobilizer Control Module code in ECM by performing procedure described in "Procedure After ECM Replacement".**	Repair or replace.

DTC22 IGNITION SWITCH CIRCUIT OPEN/SHORT

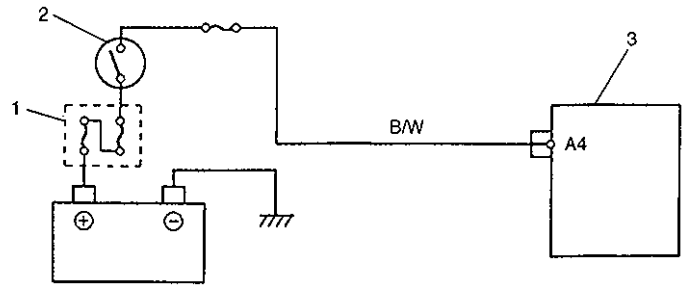

1. Main fuse
2. Ignition switch
3. Immobilizer Control Module

DESCRIPTION:

Immobilizer Control Module monitors ignition signal when the ignition switch is ON. This DTC is set when no ignition signal input is detected by Immobilizer Control Module.

INSPECTION:

STEP	ACTION	YES	NO
1	Check voltage between Immobilizer Control Module coupler terminal A4 and body ground with ignition switch turned ON. (See Fig.1) Is it 10 – 14V?	Poor A4 terminal connection. If connection is OK, substitute a known-good Immobilizer Control Module and recheck. **NOTE:** **After replacing with a know-good Immobilizer Control Module, register ECM/Immobilizer Control Module code in ECM and Transponder code and ECM/Immobilizer Control Module code in Immobilizer Control Module by performing procedure described in "Procedure After Immobilizer Control Module Replacement".**	"B/W" wire open or short.

Fig. 1 for step 1

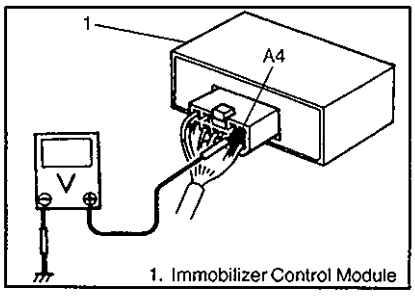

1. Immobilizer Control Module

DTC23 NO ECM/IMMOBILIZER CONTROL MODULE CODE TRANSMITTED FROM ECM OR DLC CIRCUIT OPENED/SHORTED
DTC83 NO ECM/IMMOBILIZER CONTROL MODULE CODE TRANSMITTED FROM IMMOBILIZER CONTROL MODULE OR DLC CIRCUIT OPENED/SHORTED

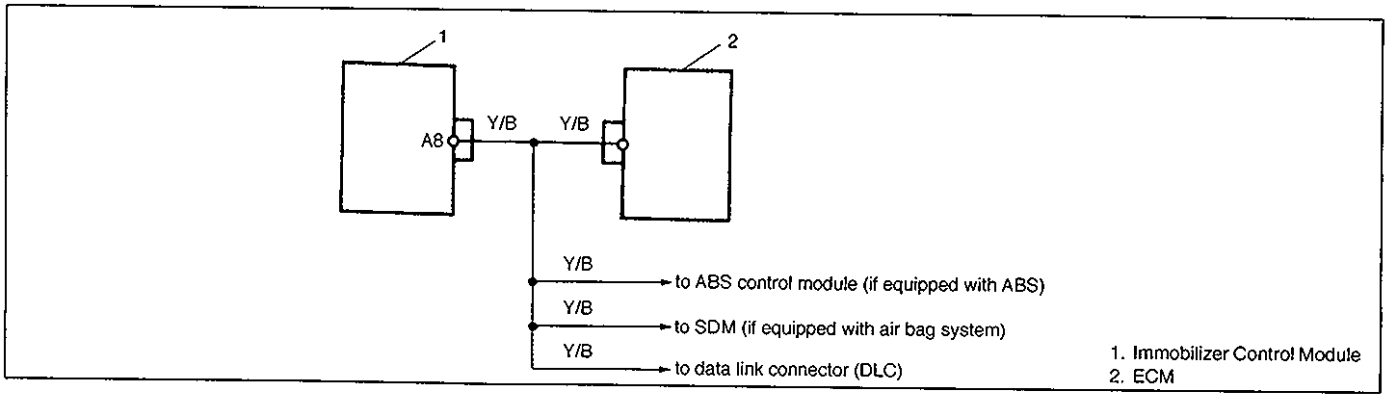

DESCRIPTION:

When the ignition switch is ON, Immobilizer Control Module requests ECM and ECM requests Immobilizer Control Module to transmit ECM/Immobilizer Control Module code. If ECM/Immobilizer Control Module code is not transmitted from ECM or Immobilizer Control Module, Immobilizer Control Module sets DTC23 and ECM sets DTC83.

INSPECTION:

STEP	ACTION	YES	NO
1	Check voltage between Immobilizer Control Module coupler terminal A8 and body ground with ignition switch turned ON. Is it 4 – 5V?	Go to Step 2.	"Y/B" wire short.
2	1) Disconnect ECM coupler with ignition switch turned OFF. 2) Is there continuity between Immobilizer Control Module coupler terminal A8 and Data link connector terminal of ECM coupler? (For positions of Data link connector terminal of ECM coupler, refer to Section 6E.)	Poor A8 connection (Immobilizer Control Module) or Poor Data link connector terminal connection (ECM). If connections are OK, substitute a known-good ECM or Immobilizer Control Module and recheck. **NOTE:** • **After replacing with a known-good ECM, register ECM/Immobilizer Control Module code in ECM by performing procedure described in "Procedure After ECM Replacement".** • **After replacing with a known-good Immobilizer Control Module, register ECM/Immobilizer Control Module code in ECM and Transponder code and ECM/Immobilizer Control Module code in Immobilizer Control Module by performing procedure described in "Procedure After Immobilizer Control Module Replacement".**	"Y/B" wire between Immobilizer Control Module and ECM open.

Fig. 1 for step 1

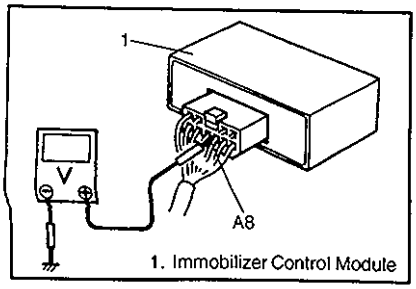

Fig. 2 for step 2

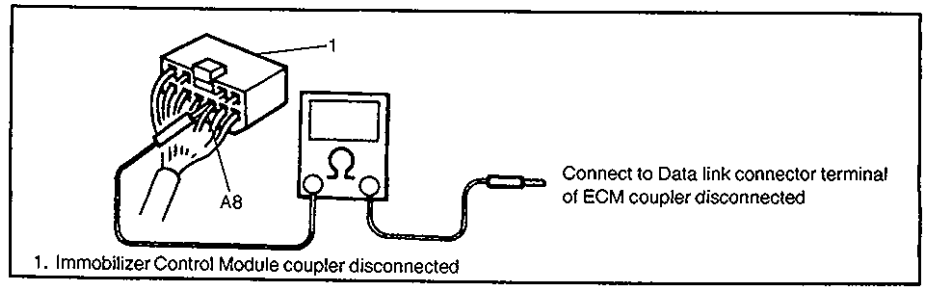

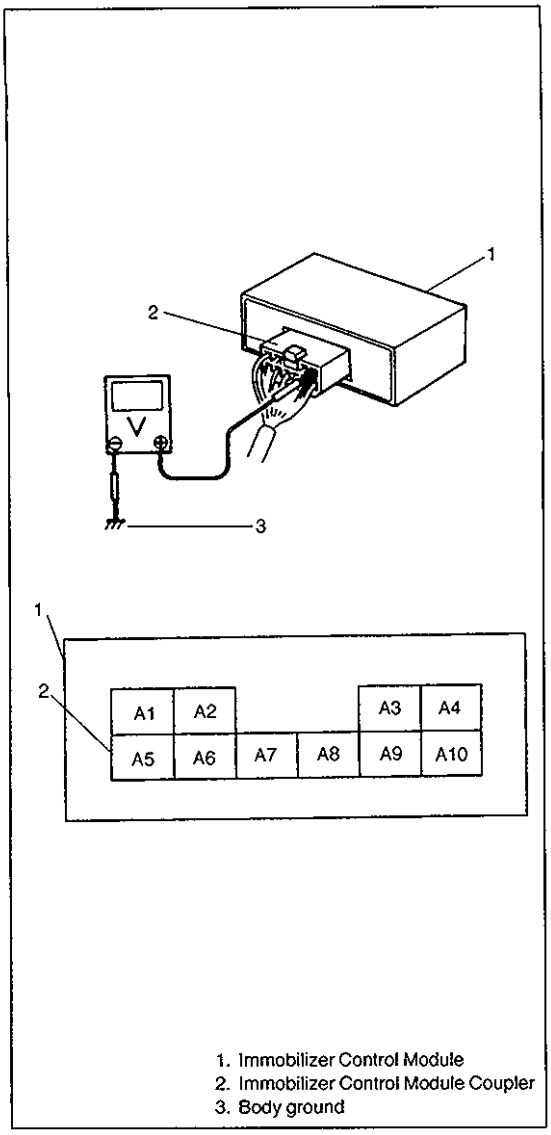

1. Immobilizer Control Module
2. Immobilizer Control Module Coupler
3. Body ground

INSPECTION OF ECM, IMMOBILIZER CONTROL MODULE AND ITS CIRCUIT

ECM, Immobilizer Control Module and its circuit can be checked at ECM wiring couplers and Immobilizer Control Module wiring coupler by measuring voltage. Described here is only inspection of Immobilizer Control Module. For inspection of ECM, refer to SECTION 6E.

CAUTION:
Immobilizer Control Module cannot be checked by itself. It is strictly prohibited to connect voltmeter or ohmmeter to Immobilizer Control Module with coupler disconnected from it.

Voltage Check

1) Remove Immobilizer Control Module from body with ignition switch OFF, referring to p.8G-16
2) Connect Immobilizer Control Module coupler to Immobilizer Control Module.
3) Check voltage at each terminal of coupler connected.

NOTE:
As each terminal voltage is affected by the battery voltage, confirm that it is 11V or more when ignition switch is ON.

TERMINAL	CIRCUIT	NORMAL VOLTAGE	CONDITION
A1	Coil antenna 1	0V	Ignition switch ON
A2	Coil antenna 2	0V	
A3	Power source	10 – 14V	
A4	Ignition signal	10 – 14V	Ignition switch ON
		0 – 0.8V	Ignition switch OFF
A5	Diagnosis output	0 – 14V	Ignition switch ON
		0V	Ignition switch OFF
A6	Blank	—	—
A7	Ground	—	—
A8	Data link connector (Serial data terminal)	4 – 5V	Ignition switch ON
A9 A10	Blank	—	—

NOTE:
When measuring voltage at A1 and A2 terminals with ignition switch turned ON, be sure to turn ignition switch ON before connecting positive probe of voltmeter to A1 or A2 terminal. If it is not turned ON first, DTC13 (Diagnostic Trouble Code 13) may be indicated.

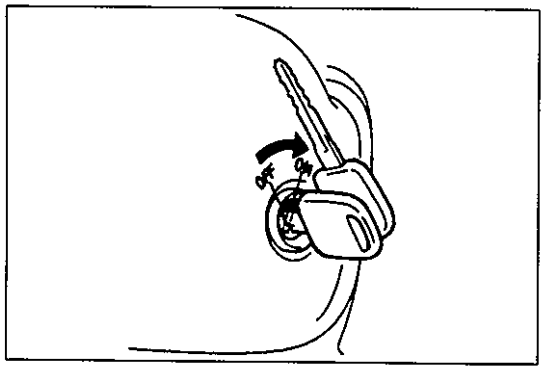

ON-VEHICLE SERVICE

PRECAUTIONS IN HANDLING IMMOBILIZER CONTROL SYSTEM

- Don't turn ON ignition switch with ignition key for immobilizer control system put together with another one or placed quite close to another one. Or the system may detect abnormal condition and prevent engine from starting.

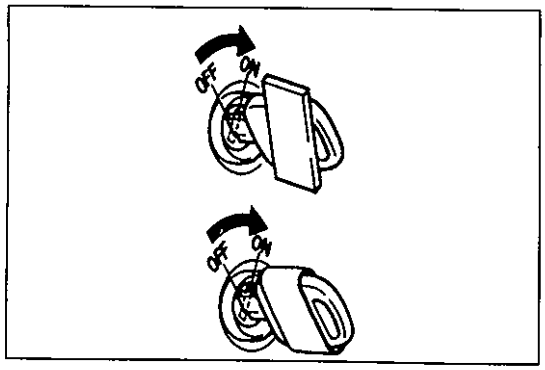

- Do not turn ON ignition switch by using ignition key with any type of metal wound around its grip or in contact with it. Or the system may detect abnormal condition and prevent engine from starting.

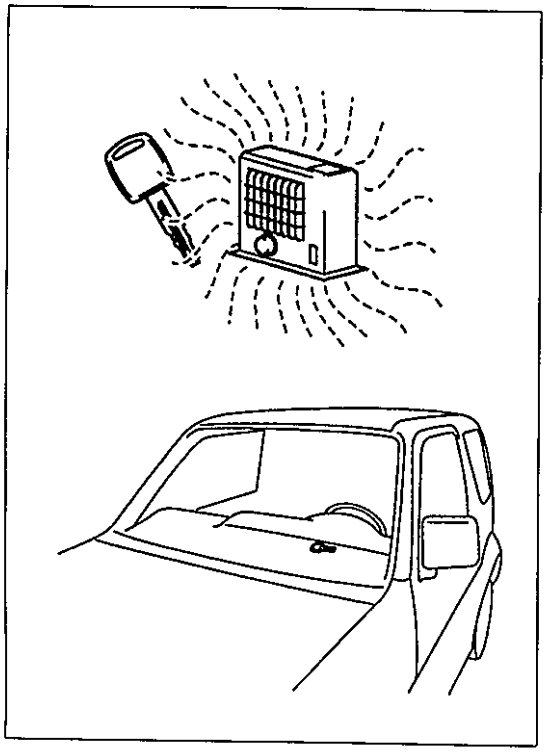

- Do not leave ignition key where high temperature is anticipated. High temperature will cause transponder in ignition key to be abnormal or damaged.

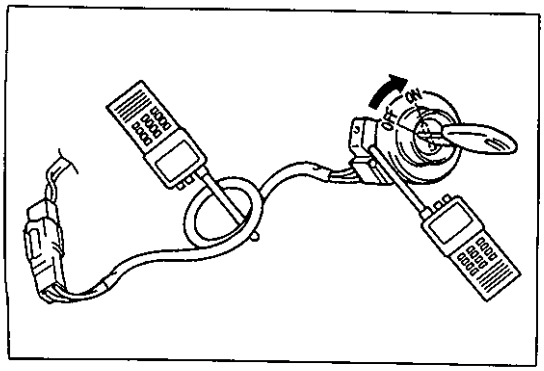

- Do not turn ON ignition switch with a radio antenna placed near coil antenna or its harness to Immobilizer Control Module. Or the system may detect abnormal condition and prevent engine from starting.

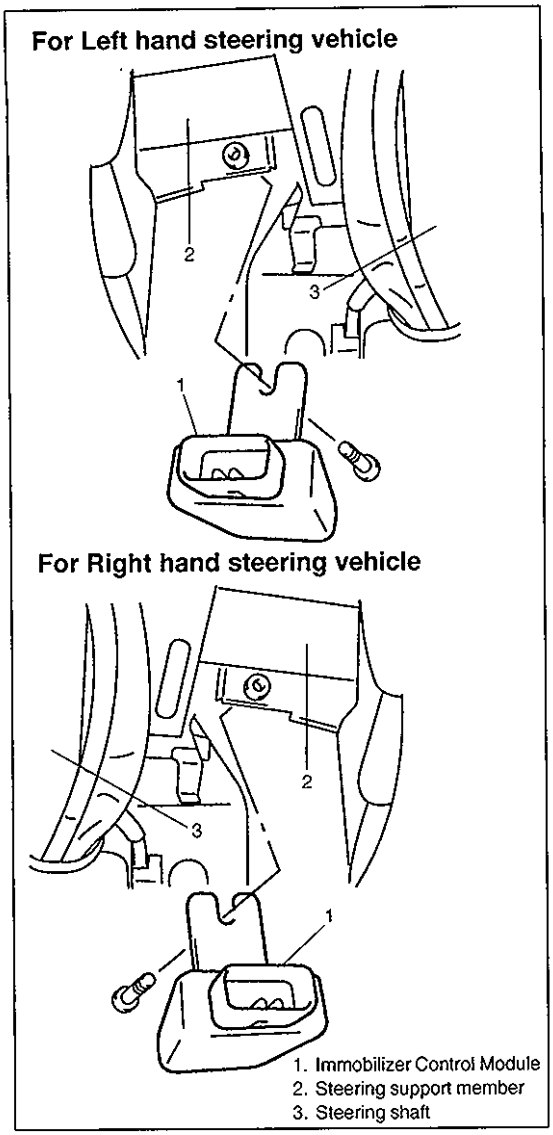

IMMOBILIZER CONTROL MODULE

Removal

1) Disconnect negative (–) cable at battery.
2) Remove steering column hole cover.
3) Disconnect coupler at Immobilizer Control Module.
4) Remove immobilizer control module.

Installation

Reverse removal procedure for installation.

NOTE:

After replacing Immobilizer Control Module, be sure to register Transponder code and ECM/Immobilizer Control Module code in Immobilizer Control Module and ECM/Immobilizer Control Module code in ECM by performing procedure described in "Procedure After Immobilizer Control Module Replacement".

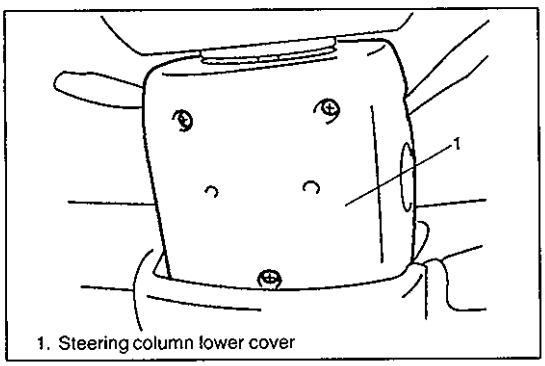

COIL ANTENNA

Removal

1) Disconnect negative (–) cable at battery.
2) Remove steering column hole cover.
3) Remove steering column upper and lower cover.

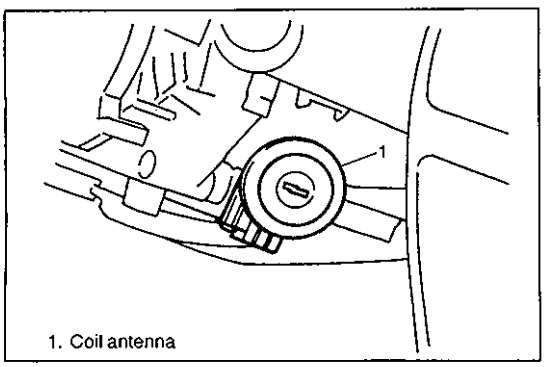

4)Remove coil antenna.

Installation

For installation, reverse removal procedure.

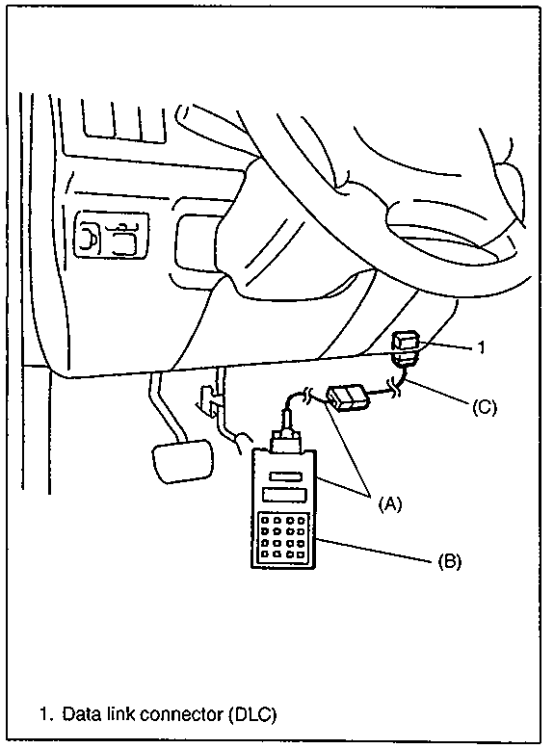

1. Data link connector (DLC)

HOW TO REGISTER IGNITION KEY

Register the ignition key with a built-in transponder in Immobilizer Control Module by using the following procedure.

1) Prepare SUZUKI scan tool and cartridge for immobilizer control system.
2) With ignition switch OFF, connect SUZUKI scan tool to data link connector (DLC) located on underside of instrument panel at driver's seat side.

   (A): 09931-76011 (SUZUKI scan tool)
   (B): Immobilizer cartridge 1.1
   (C): 09931-76030 (16/14 pin DLC cable)

   NOTE:
   For operation procedure of SUZUKI scan tool, refer to SUZUKI scan tool operator's manual.

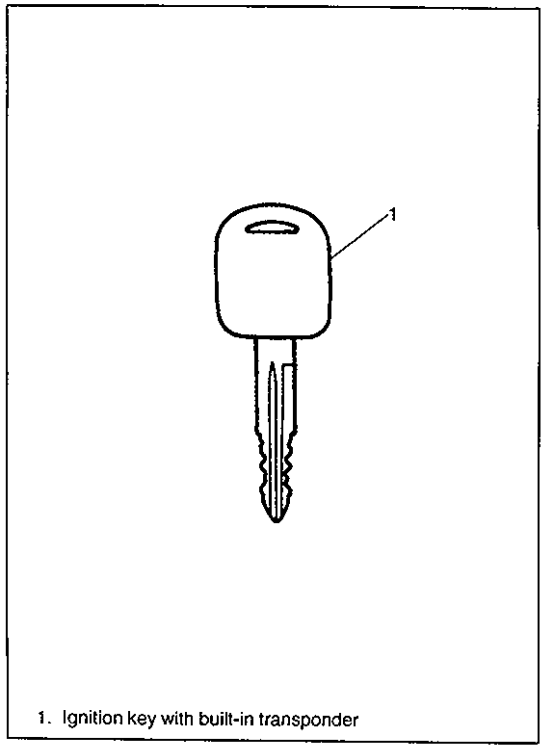

1. Ignition key with built-in transponder

3) Prepare ignition key with a built-in transponder. And then turn ignition switch ON by using it.
4) Number of Transponder codes for ignition key with a built-in transponder that can be registered in Immobilizer Control Module is limited to 4. If needed, clear all Transponder codes for ignition key with a built-in transponder that have been registered in Immobilizer Control Module by executing the "CLR. TRANS COD (CLEAR TP CODE)" command in the SELECT MODE menu by using SUZUKI scan tool.

   NOTE:
   When "CLR. TRANS COD (CLEAR TP CODE)" command is executed with the malfunction indicator lamp ("CHECK ENGINE" light) ON, it remains ON even after execution of that command is over. It will start flashing when the ignition switch is turned OFF once and then turned ON after some seconds.
5) Using SUZUKI scan tool, register Transponder code in Immobilizer Control Module by executing "ENT. TRANS COD (ENT. TP CODE)" command in SELECT MODE menu.
6) Make sure that malfunction indicator lamp ("CHECK ENGINE" light) lights when ignition switch is turned OFF once and then ON.
7) If any other Transponder code for ignition key with a built-in transponder needs to be registered, repeat above steps 3), 5) and 6).

   NOTE:
   - **Up to 4 Transponder codes for ignition key with a built-in transponder can be registered.**
   - **It is not possible to register the same Transponder code for ignition key with a built-in transponder as the one already registered in Immobilizer Control Module.**

PROCEDURE AFTER IMMOBILIZER CONTROL MODULE REPLACEMENT

When Immobilizer Control Module was replaced, including when replaced because rechecking by using a known-good Immobilizer Control Module was necessary during trouble diagnosis, register Transponder code and ECM/Immobilizer Control Module code in Immobilizer Control Module and ECM/Immobilizer Control Module code in ECM by performing following procedure.

1) Perform steps 1) and 2) described in "How To Register Ignition Key".
2) Prepare ignition key with a built-in transponder. And then turn ignition switch ON by using it.
3) Using SUZUKI scan tool, clear all transponder codes registered in Immobilizer Control Module by executing "CLR. TRANS COD (CLEAR TP CODE)" command in SELECT MODE menu.

   NOTE:
   When "CLR. TRANS COD (CLEAR TP CODE)" command is executed with the malfunction indicator lamp ("CHECK ENGINE" light) ON, it remains ON even after execution of that command is over. It will start flashing when the ignition switch is turned OFF once and then turned ON after some seconds.
4) Using SUZUKI scan tool, register Transponder code in Immobilizer Control Module by executing "ENT. TRANS COD (ENT. TP CODE)" command in SELECT MODE menu.
5) Using SUZUKI scan tool, register ECM/Immobilizer Control Module code in both Immobilizer Control Module and ECM by executing "RECORD ECU (RECORD ECM/ICM)" command in SELECT MODE menu.
6) Make sure that malfunction indicator lamp ("CHECK ENGINE" light) lights when ignition switch is turned OFF once and then ON.
7) If any other Transponder code for ignition key with a built-in transponder needs to be registered, repeat above steps 2), 4) and 6).

   NOTE:
   - **Up to 4 Transponder codes for ignition key with a built-in transponder can be registered.**
   - **It is not possible to register the same Transponder code for ignition key with a built-in transponder as the one already registered in Immobilizer Control Module.**

PROCEDURE AFTER ECM REPLACEMENT

When ECM was replaced, including when replaced because rechecking by using a known-good ECM was necessary during trouble diagnosis, register ECM/Immobilizer Control Module code in ECM by performing following procedure.

1) Perform steps 1) and 2) described in "How To Register Ignition Key". And then turn ignition switch ON.
2) Using SUZUKI scan tool, register ECM/Immobilizer Control Module code in ECM by executing "RECORD ECU (RECORD ECM/ICM)" command in SELECT MODE menu.

   NOTE:
   For operation procedure of SUZUKI scan tool, refer to SUZUKI scan tool operator's manual.

3) Make sure that malfunction indicator lamp ("CHECK ENGINE" light) lights when ignition switch is turned OFF once and then ON.

SPECIAL TOOLS

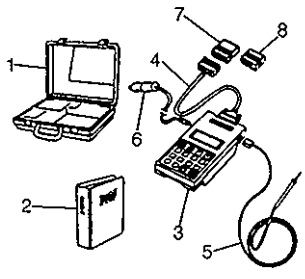

1. Storage case
2. Operator's manual
3. Tech 1A
4. DLC cable
5. Test lead/probe
6. Power source cable
7. DLC cable adaptor
8. Self-test adaptor

09931-76011
Tech 1A kit

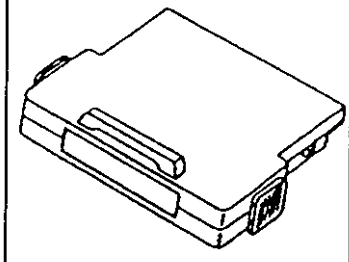

Immobilizer cartridge 1.1

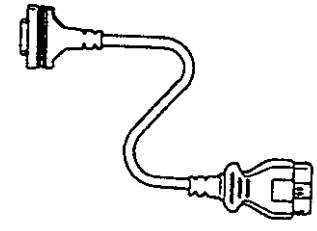

09931-76030
16/14 pin DLC cable

SECTION 9

BODY SERVICE

WARNING:
For vehicles equipped with Supplemental Restraint (Air Bag) System

- **Service on and around the air bag system components or wiring must be performed only by an authorized SUZUKI dealer. Refer to "Air Bag System Components and Wiring Location View" under "General Description" in air bag system section in order to confirm whether you are performing service on or near the air bag system components or wiring. Please observe all WARNINGS and "Service Precautions" under "On-Vehicle Service" in air bag system section before performing service on or around the air bag system components or wiring. Failure to follow WARNINGS could result in unintentional activation of the system or could render the system inoperative. Either of these two conditions may result in severe injury.**
- **Technical service work must be started at least 90 seconds after the ignition switch is turned to the "LOCK" position and the negative cable is disconnected from the battery. Otherwise, the system may be activated by reserve energy in the Sensing and Diagnostic Module (SDM).**
- **When body servicing, if shock may be applied to air bag system component parts, remove those parts beforehand. (Refer to Section 10B.)**

NOTE:
Fasteners are important attaching parts in that they could affect the performance of vital components and systems, and/or could result in major repair expense. They must be replaced with one of the same part number of with an equivalent part if replacement becomes necessary.
Do not use a replacement part of lesser quality or substitute a design. Torque values must be used as specified during reassembly to assure proper retention of these parts.

CONTENTS

GLASS AND WINDOWS 9- 2
Front Door Glass 9- 2
Front Door Window Regulator 9- 4
Window Shield 9- 5
Quarter Window 9-10
Back Door Glass 9-11
BODY STRUCTURE 9-12
Front Door Assembly 9-12
Back Door Assembly 9-13
Under Body Dimensions 9-15
Body Dimensions 9-17
INSTRUMENTATION AND DRIVER INFORMATION 9-20
Instrument Panel 9-20
SEATS 9-21
Front Seat and Rear Seat 9-21
PAINT AND COATINGS 9-22
Anti-Corrosion Treatment 9-22
Metal Replacement Parts Finishing 9-23
SECURITY AND LOCKS 9-31
Front Door Lock Assembly 9-31
Back Door Lock Assembly 9-33
EXTERIOR AND INTERIOR TRIM 9-34
Splash Guard 9-34
Roof Rail (If Equipped) 9-34

GLASS AND WINDOWS

FRONT DOOR GLASS

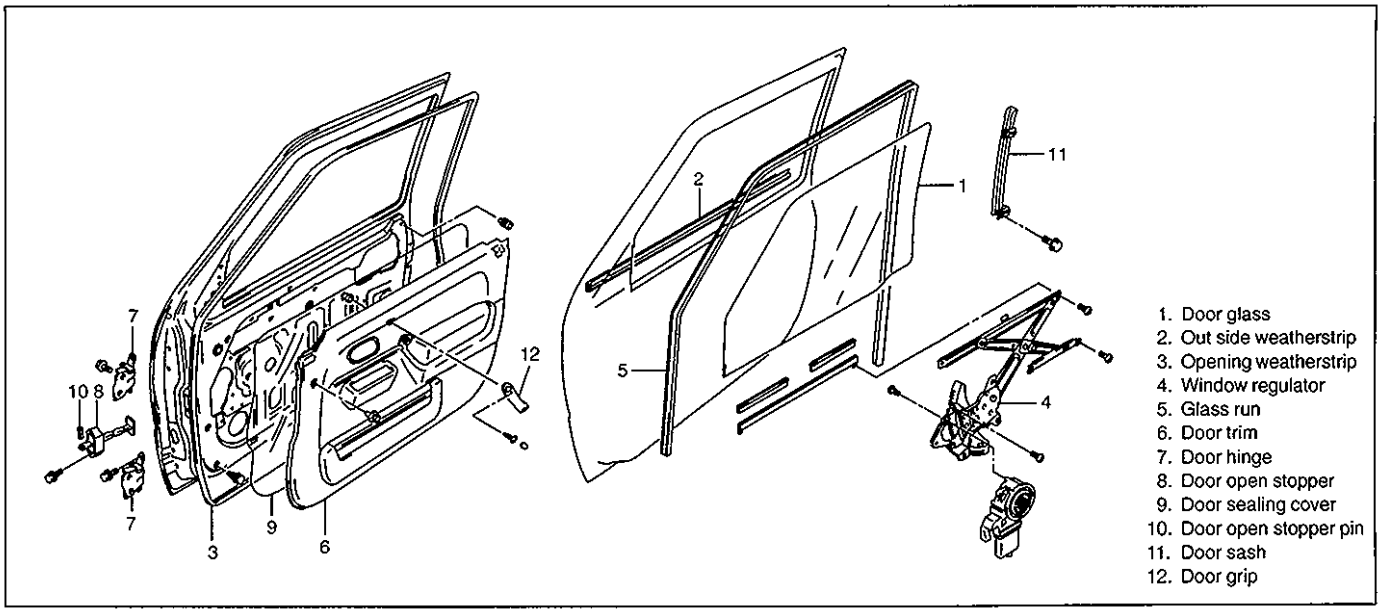

1. Door glass
2. Out side weatherstrip
3. Opening weatherstrip
4. Window regulator
5. Glass run
6. Door trim
7. Door hinge
8. Door open stopper
9. Door sealing cover
10. Door open stopper pin
11. Door sash
12. Door grip

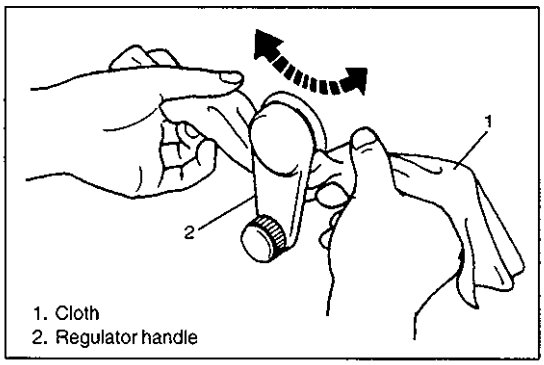

1. Cloth
2. Regulator handle

REMOVAL

1) Remove window regulator handle (if equipped).
   For its removal, pull off snap by using a cloth as shown in left figure.

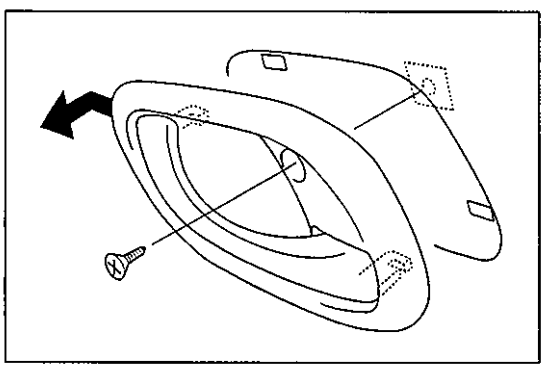

2) Remove inside handle bezel.
3) Remove door inner garnish.
4) Remove inside lock knob and door grip fitting screw.

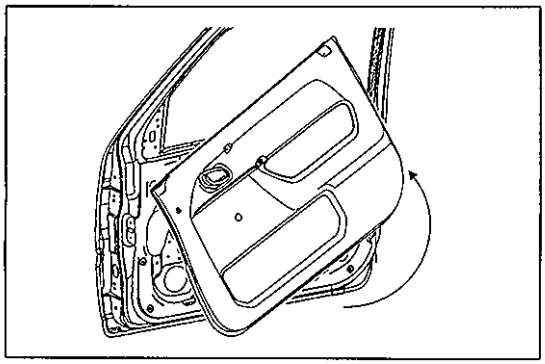

5) Remove door trim.
   With inside handle bezel tilted as shown in figure, turn door trim 90° counterclockwise to remove it.
   And disconnect power window switch lead wire at coupler (if equipped).

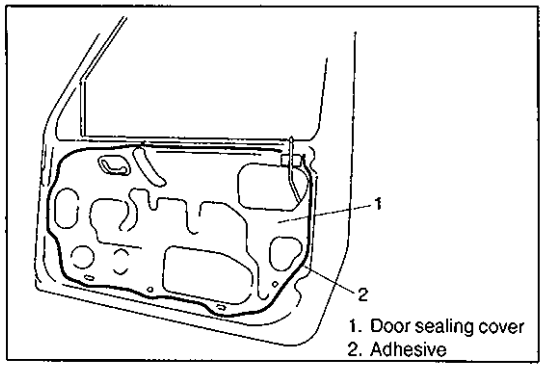

6) Remove door sealing cover.

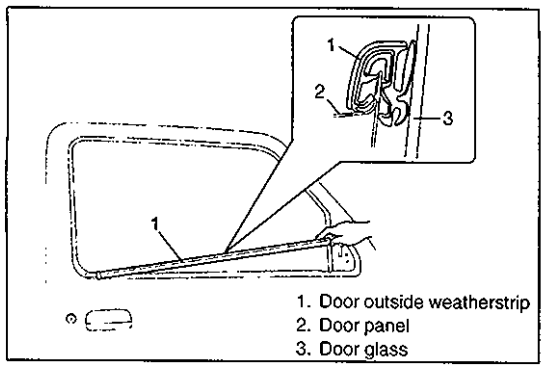

7) Remove door mirror.
8) Remove door outside weatherstrip.
Lower window all the way down. Then, use a tape-wrapped putty knife (or screwdriver) to pry off weatherstrip.

CAUTION:
Use a tape-wrapped putty knife (or screwdriver) to pry off weatherstrip. Use of an unwrapped tool will cause damage to painting.

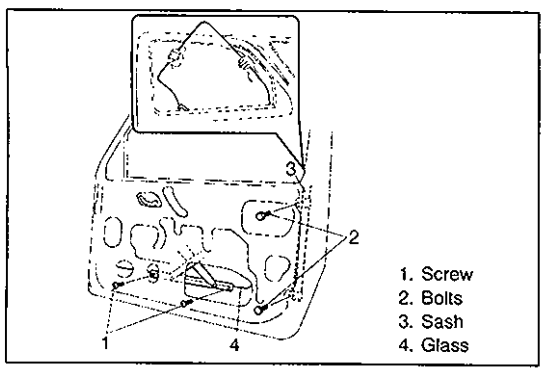

9) Remove door sash mounting bolts.
10) Remove glass attaching screws.
11) Take out door glass.

INSTALLATION

Reverse removal procedure to install door glass noting following points:

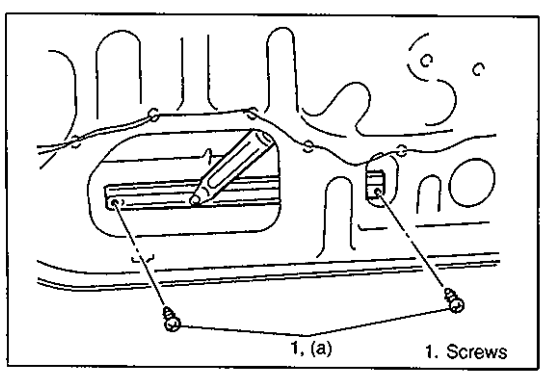

- Tighten glass attaching screws to specified torque. Tighten rear screw first, then front screw.
Tightening Torque
(a): 6 N·m (0.6 kg-m, 4.3 lb-ft)
- When window becomes hard to raise and lower, adjust screws to correct tilted glass as shown in figure.

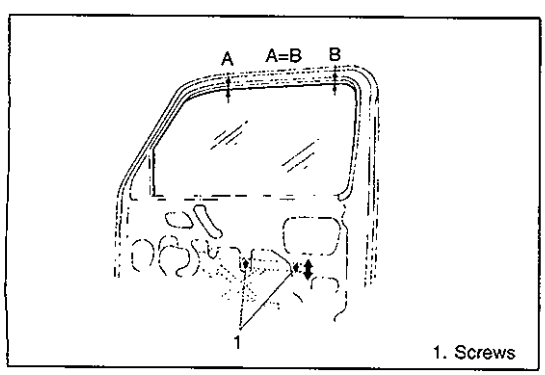

- Adjust equalizer of window regulator so that measurement A and B are equal.

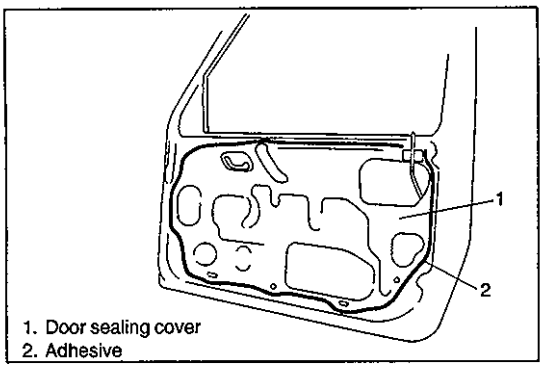

1. Door sealing cover
2. Adhesive

- Secure door sealing cover with adhesive.

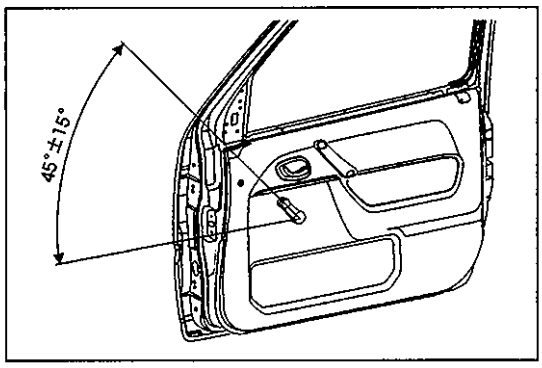

- Install door window regulator handle so that it has a 45° angle when glass is fully closed, as shown in left figure.

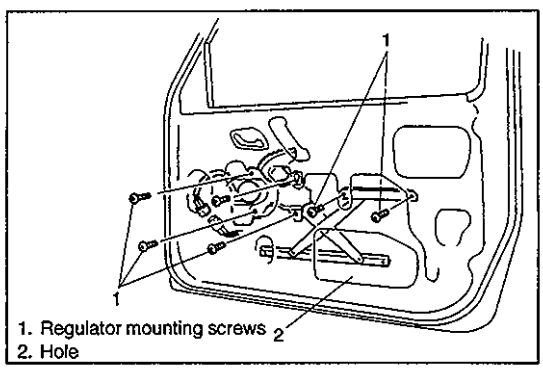

1. Regulator mounting screws
2. Hole

FRONT DOOR WINDOW REGULATOR

REMOVAL

1) Remove door glass, referring to steps 1) to 11) of FRONT DOOR GLASS REMOVAL in this section.
2) Disconnect power window motor lead wire at coupler and loosen clamp.
3) Loosen regulator mounting screws and take out regulator through hole as shown in left figure.

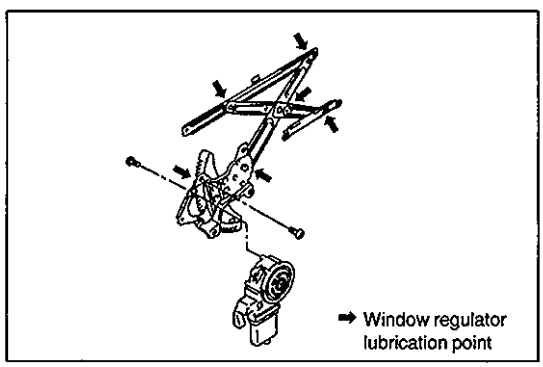

INSPECTION

1) Check regulator sliding and rotating parts for greasing.
2) Check rollers for wear and damage.
3) Check wire for damage.

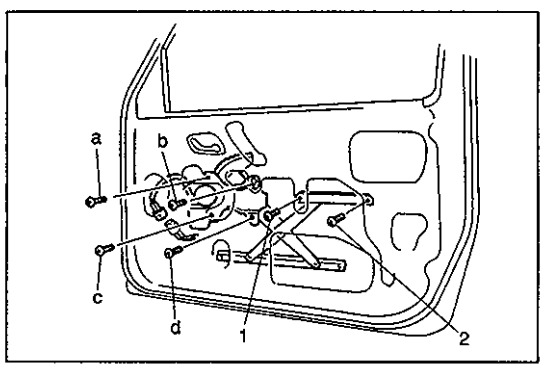

INSTALLATION

Reverse removal procedure to install window regulator noting following point.

- Tighten screws according to the order (a, b, c, d, 1, 2) shown in left figure.
- When installing glass, check that the top part of the glass contacts the glass run evenly and that the glass moves up and down smoothly.
  If the glass is tilted with respect to the glass run, make a fine adjustment with the screws. Refer to "FRONT DOOR GLASS" in this section.

WINDOW SHIELD

The front windshield is installed by using a special type of adhesive (that is, one component urethane adhesive used with primer). For the Windshield replacement, it is important to use an adhesive which provides sufficient adhesion strength and the follow the proper procedure.

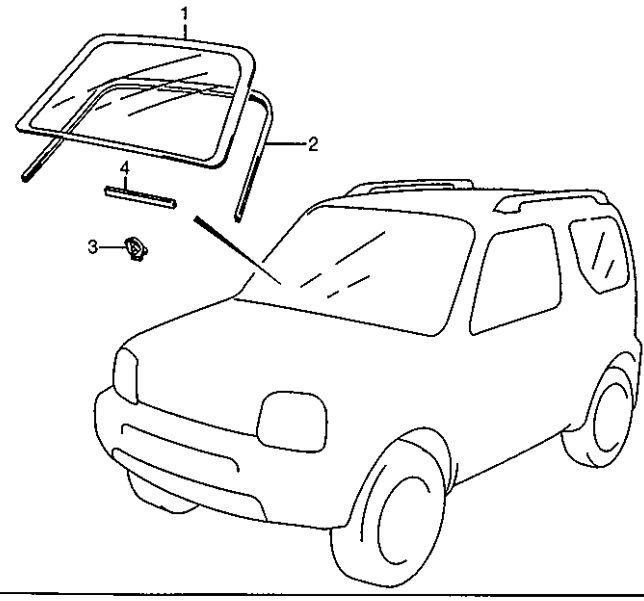

1. Windshield glass
2. Windshield molding
3. Stopper
4. spacer

CAUTION:

- **Described in this section is the glass replacement by using 3 types of primers and 1 type of adhesive made by YOKOHAMA (one component urethane adhesive to be used with primer in combination). When using primer and adhesive made by other manufacturers, be sure to refer to handling instructions supplied with them. Negligence in following such procedure or misuse of the adhesive in any way hinders its inherent adhesive property. Therefore, before the work, make sure to read carefully the instruction and description given by the maker of the adhesive to be used and be sure to follow the procedure and observe each precaution throughout the work.**
- **Should coated surface be scratched or otherwise damaged, be sure to repair damaged part, or corrosion may start from there.**

Use an adhesive of above mentioned type which has following property.

Shearing strength: 40 kg/cm^2 (569 lb/in^2) or more

Adhesive materials and tools required for removal and installation.

- One component urethane adhesive and primers used in combination (For one sheet of windshield).
  Adhesive (470 g (15.7 oz.))
  Primer for glass (30 g (1.0 oz.))
  Primer for body (30 g (1.0 oz.))
  Primer for molding (30 g (1.0 oz.))
- Eyeleteer
- Piano string
- Windshield knife
- Brush for primer application (2 pcs)
- Knife
- Rubber sucker grip
- Sealant gun (for filling adhesive)
- Putty spatula (for correcting adhered parts)

REMOVAL

1) Clean both inside and outside of glass and around it.
2) Remove wiper arms and garnish.
3) Using tape, cover body surface around glass to prevent any damage.
4) Remove rear view mirror, sunvisor, and front pillar trims (right & left).
5) If necessary, remove instrument panel. Refer to "INSTRUMENT PANEL" in this section.
6) If necessary, remove head lining. Refer to "HEAD LINING" in this section.
7) Remove (or cut) windshield molding all around until windshield edge comes out.

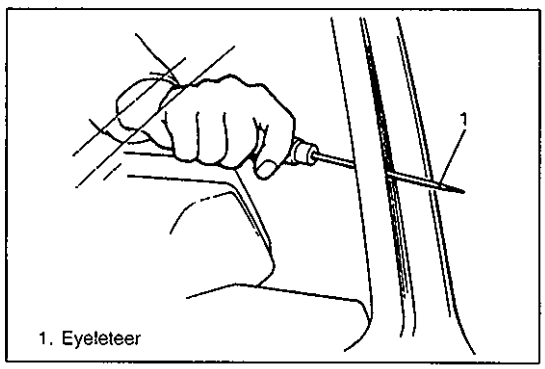

1. Eyeleteer

8) Drill hole with eyeletter through adhesive and let piano string through it.

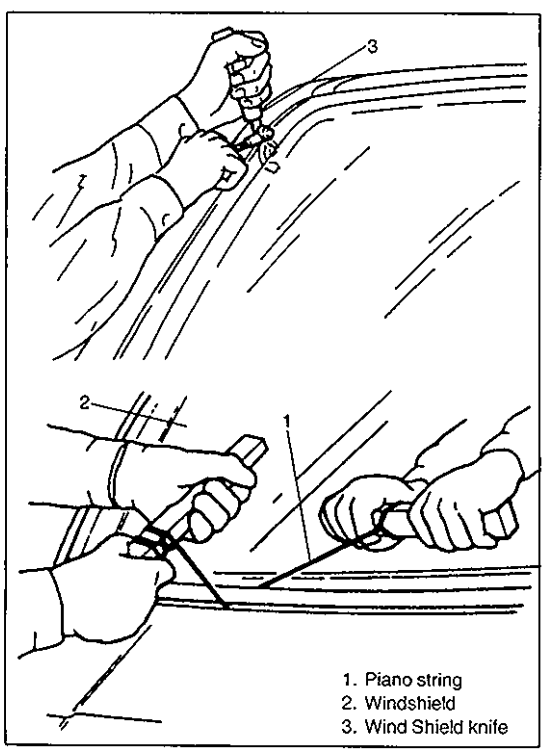

1. Piano string
2. Windshield
3. Wind Shield knife

9) Cut adhesive all around windshield with piano string.
When using tool to cut adhesive, be careful not to cause damage to windshield. Use wire to cut adhesive along lower part of windshield.

NOTE:
Use piano string as close to glass as possible so as to prevent damage to body and instrument panel.

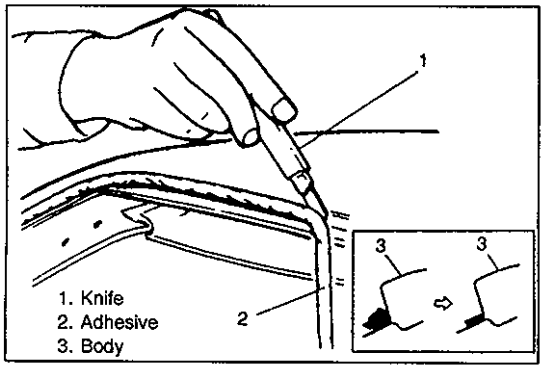

10) Using knife, smoothen adhesive remaining on body side so that it is 1 to 2 mm thick all around.

NOTE:
Before using knife, clean it with alcohol or the like to remove oil from it.

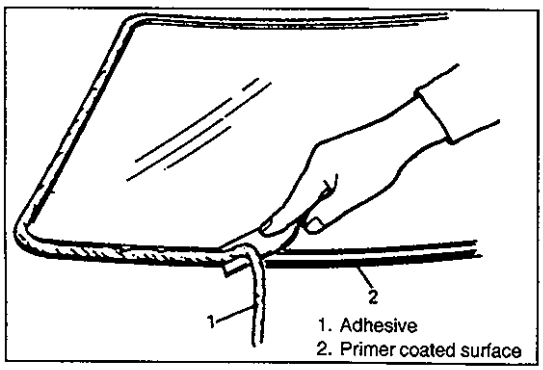

11) When reusing windshield, remove the adhesive from it, using care not to damage primer coated surface.

INSTALLATION

1) Using cleaning solvent, clean windshield edge where windshield glass is to be adhered. (Let it dry for more than 10 minutes.)
2) Install new glass stoppers (2pcs) to lower side of windshield.

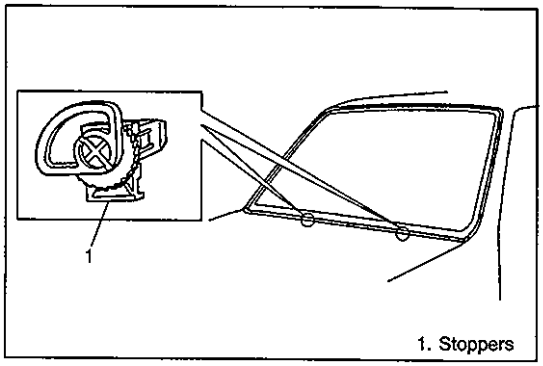

3) To determine installing position of glass to body, position glass against body so that clearance between upper end of glass and body is about 5 mm (0.197 in.) and clearances between each side end (right & left) of glass and body are even. Place glass so that lug of fastener is matched with cut in body and fit fastener. Then mark mating marks on glass and body as shown.
Upper clearance can be adjusted by moving stoppers position.

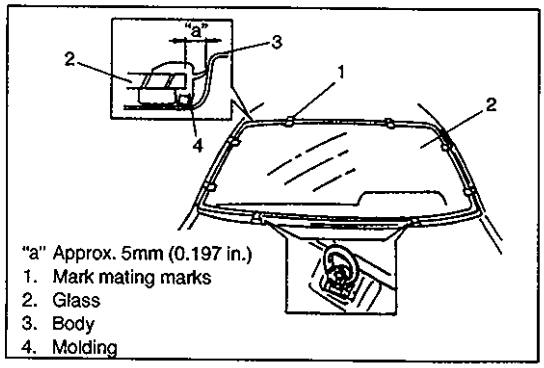

4) Clean contact surfaces of old adhesive, paint or bare metal thoroughly.
If surfaces of paint or bare metal come out, apply primer for body with caution not to apply primer to surface of adhesive remaining on body.

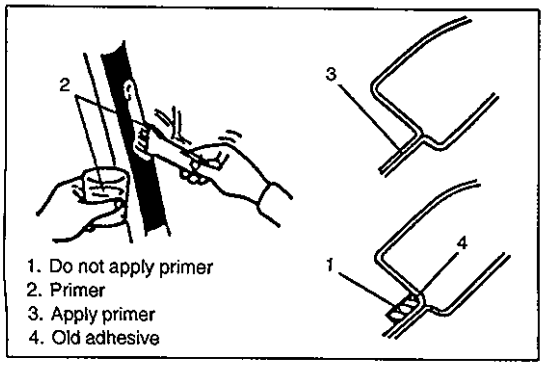

NOTE:
- **Be sure to refer to primer maker's instruction for proper handling and drying time.**
- **Do not touch body and old adhesive surfaces where glass is to be adhered.**

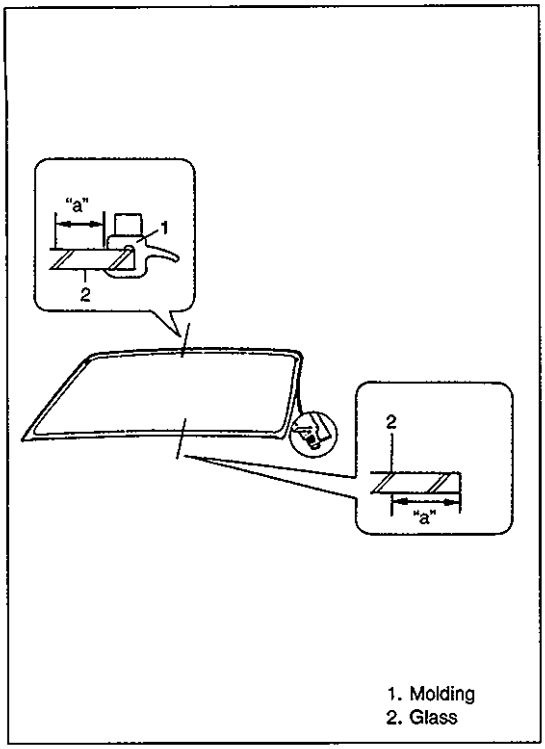

1. Molding
2. Glass

5) Install new molding to glass.
6) Clean glass surface to be adhered to body with clean cloth. If cleaning solvent is used, let it dry for more than 10 minutes.

Cleaning Area
Distance from the edge of glass or molding
"a": 30 – 50 mm (1.18 – 1.97 in.)

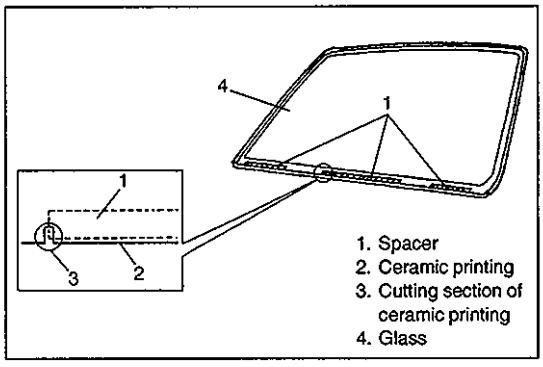

1. Spacer
2. Ceramic printing
3. Cutting section of ceramic printing
4. Glass

7) Install new spacer to glass.

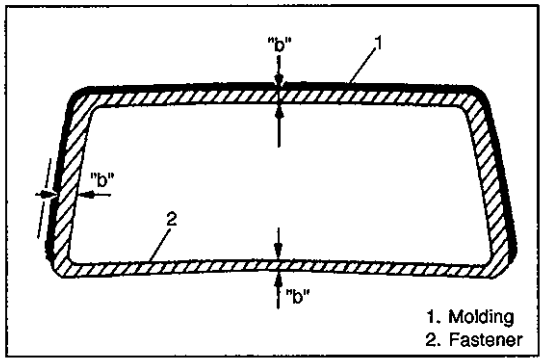

1. Molding
2. Fastener

8) Using new brush, apply sufficient amount of primer for glass along glass surface to be adhered to body.

NOTE:
- **Be sure to refer to maker's instruction for proper handling and drying time.**
- **Do not apply primer on outside of ceramic coated surface.**
- **Do not touch primer coated surface.**
- **Width "b": 15 mm (0.59 in.)**

9) Apply primer for molding along molding surface all around as shown in figure.

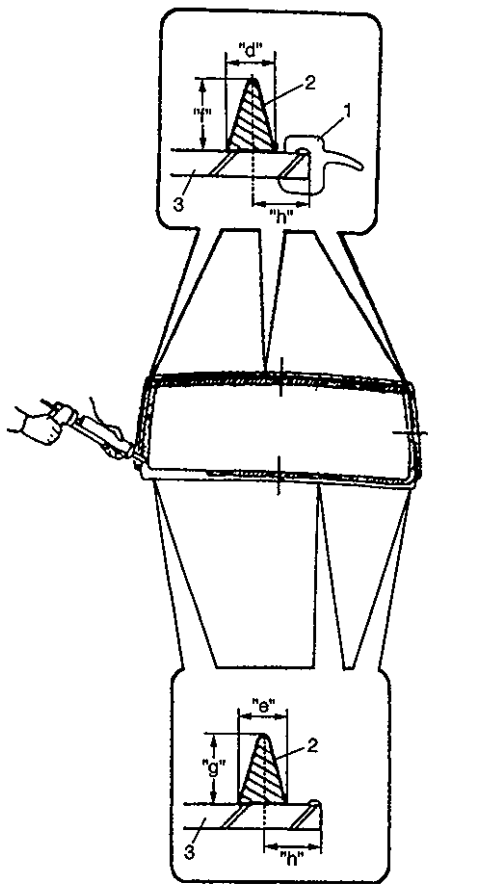

1. Molding
2. Adhesive
3. Glass

"A":Apply primer for molding

10) Apply adhesive referring to figure at the left.

NOTE:

- **Start from bottom side of glass.**
- **Be careful not to damage primer.**
- **Height of adhesive applied to lower side should be higher than that of other three sides.**
- **Upper, right and left sides**

  Width "d" : Approx. 8 mm (0.31 in.)
  "e" : Approx. 9 mm (0.35 in.)
  Height "f" : Approx. 15 mm (0.59 in.)
  "g" : Approx. 17 mm (0.67 in.)
  Distance "h" : Approx. 10.5 mm (0.41 in.)
- **Press glass against body quickly after adhesive is applied.**
- **Use of rubber sucker grip is helpful to hold and carry glass after adhesive is applied.**
- **Perform steps 8) to 9) within 10 min. to ensure sufficient adhesion.**
- **Be sure to refer to adhesive maker's instruction for proper handling and drying time.**

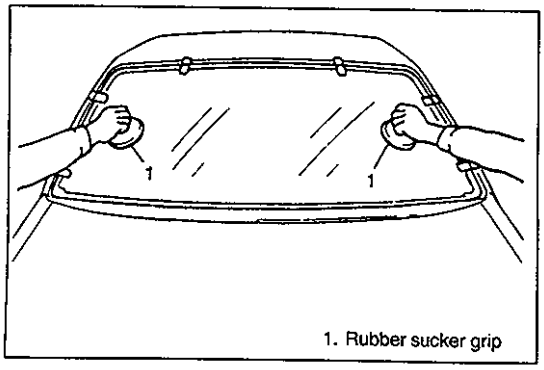

1. Rubber sucker grip

11) Holding rubber sucker grips, place glass onto body by aligning mating marks marked in step 3) and press it.

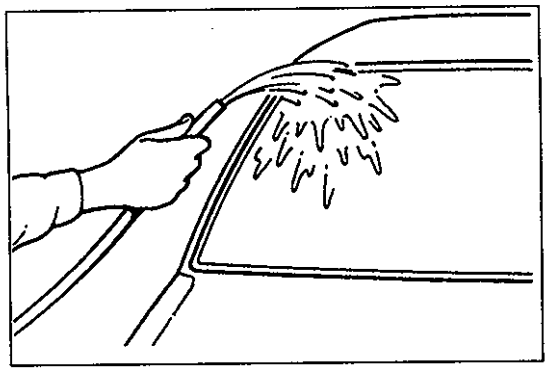

12) Check for water leakage by pouring water over windshield through hose. If leakage is found, dry windshield and fill leaky point with adhesive. If water still leaks even after that, remove glass and start installation procedure all over again.

NOTE:

- **Do not use high pressure water.**
- **Do not blow compressed air directly at adhesive applied part when drying.**
- **Do not use infrared lamp or like for drying.**

CAUTION:
Upon completion of installation, note the following.

- **Sudden closing of door before adhesive is completely set may cause glass to become loose or to come off. Therefore, if door is opened or closed before adhesive is completely set, make sure to open all door glasses and use proper care.**
- **If molding is not securely in place, hold it down with a tape until adhesive is completely set.**
- **Each adhesive has its own setting time. Be sure to refer to its maker's instruction, check setting time of adhesive to be used and observe precautions to be taken before adhesive is set.**
- **Refrain from driving till adhesive is completely set so as to ensure proper and sufficient adhesion.**

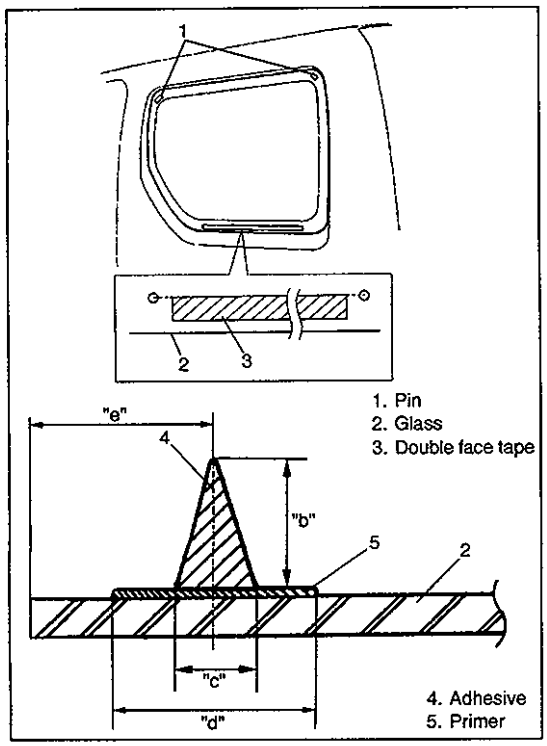

QUARTER WINDOW

REMOVAL AND INSTALLATION

Refer to "WINDSHIELD" section as removal and installation procedures are basically the same. However, note the following.

NOTE:

- **Observe following precautions when applying adhesive along glass edge.**
  - **Adhesive should be applied evenly especially in height.**
  - **Be careful not to damage primer.**
  - **Press glass against body quickly after adhesive is applied.**

Height "b" : 15 mm (0.59 in.)
Width "d" : 15 mm (0.59 in.)
"c" : 6 mm (0.23 in.)
Clearance "e" : 17 mm (0.67 in.) for glass lower section and rear section
: 12 mm (0.47 in.) for glass upper section.
: 14 mm (0.55 in.) for glass front section.

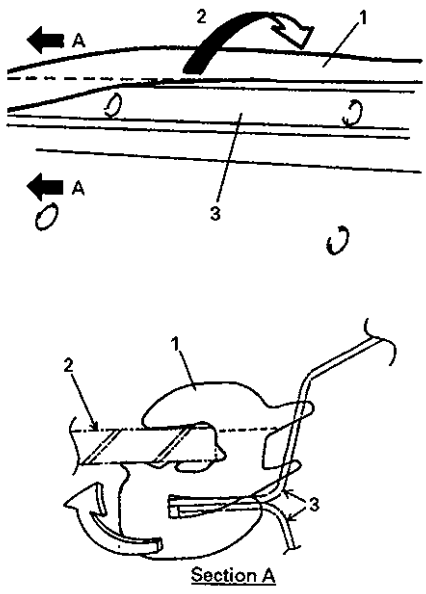

1. Weatherstrip
2. Glass
3. Back door panel

BACK DOOR GLASS

REMOVAL

1) Remover rear wiper arm.
2) Disconnect rear defogger coupler.
3) As rear window shield is fixed by means of back door window weatherstrip, remove glass and weatherstrip together by removing end of weatherstrip little by little while pushing the entire glass from inside toward outside as shown in figure.

NOTE:
Do not apply an excessive force to glass locally.

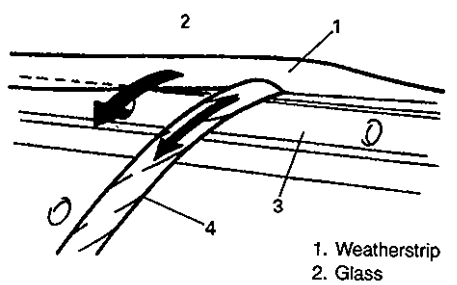

1. Weatherstrip
2. Glass
3. Back door panel
4. String

INSTALLATION

1) Install weatherstrip to glass.
2) Pass string through outer groove of weatherstrip (groove where back door panel fits in) so that weatherstrip can be installed to back door.
3) Apply soap water to outer edge of back door panel and install glass and weatherstrip together to back door by pulling the string little by little.
4) Connect rear defogger coupler.
5) Install rear wiper arm.

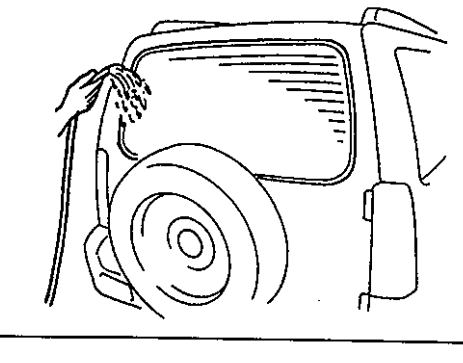

6) Check for water leakage by running water from hose over window. If leakage is found, complete the installation of leaky point. If water still leaks even after that, remove glass and start installation procedure all over again.

NOTE:
Do not use high pressure water.

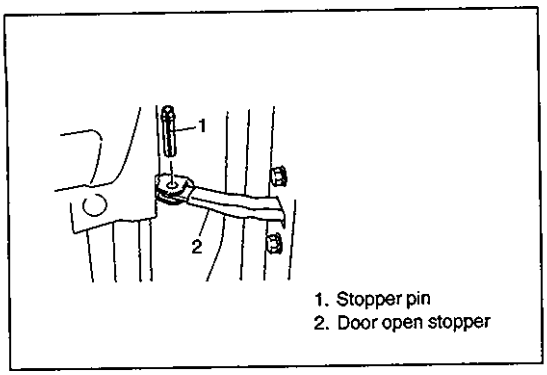

1. Stopper pin
2. Door open stopper

BODY STRUCTURE

FRONT DOOR ASSEMBLY

REMOVAL

1) Remove front fender.
2) Disconnect door harness lead wires at each coupler.
3) Remove stopper pin.

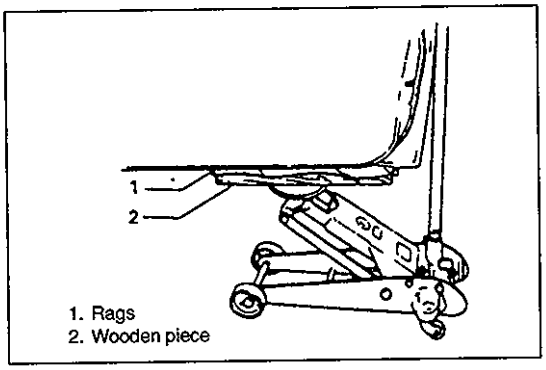

1. Rags
2. Wooden piece

4) Support door panel using a jack with a piece of wood placed between jack and panel, as shown.

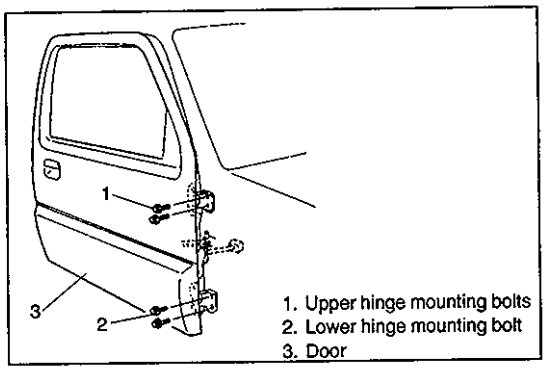

1. Upper hinge mounting bolts
2. Lower hinge mounting bolt
3. Door

5) Remove door assy by loosening hinge mounting bolts.

INSTALLATION

Reverse removal procedure to install door assembly, noting following point.

NOTE:
When replacing door, coat replacement door inside with wax for proper anticorrosion treatment.
Refer to "UNDERCOATING/ANTI-CORROSION COMPOUND APPLICATION AREA" in this section.

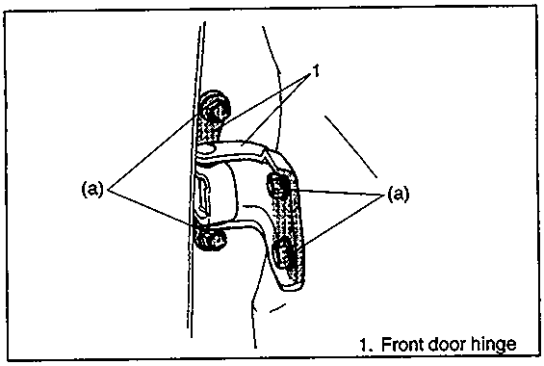

1. Front door hinge

- Tighten door hinge bolts to specified torque.

  Tightening torque
  (a): 27 N·m (2.7 kg-m, 19.5 lb-ft)

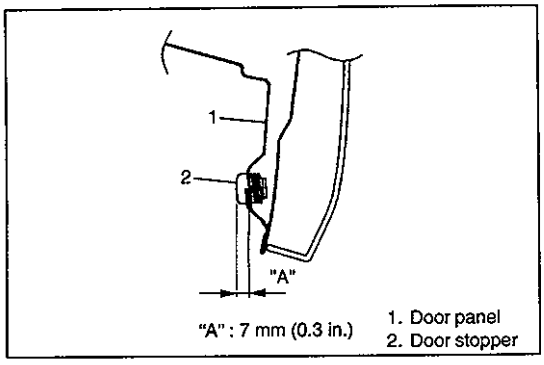

"A" : 7 mm (0.3 in.)
1. Door panel
2. Door stopper

- Adjust door latch striker position by referring to "FRONT DOOR LOCK INSTALLATION" Section so that door is positioned correctly.
- Adjust front door cushion so that door contacts body when closed as shown in left figure.
- After installation, open and close the door to check looseness. Replace door open stopper pin when there is looseness.
- When weatherstrip is hardened, water leak may develop. In such case, replace it with new one.

BACK DOOR ASSEMBLY

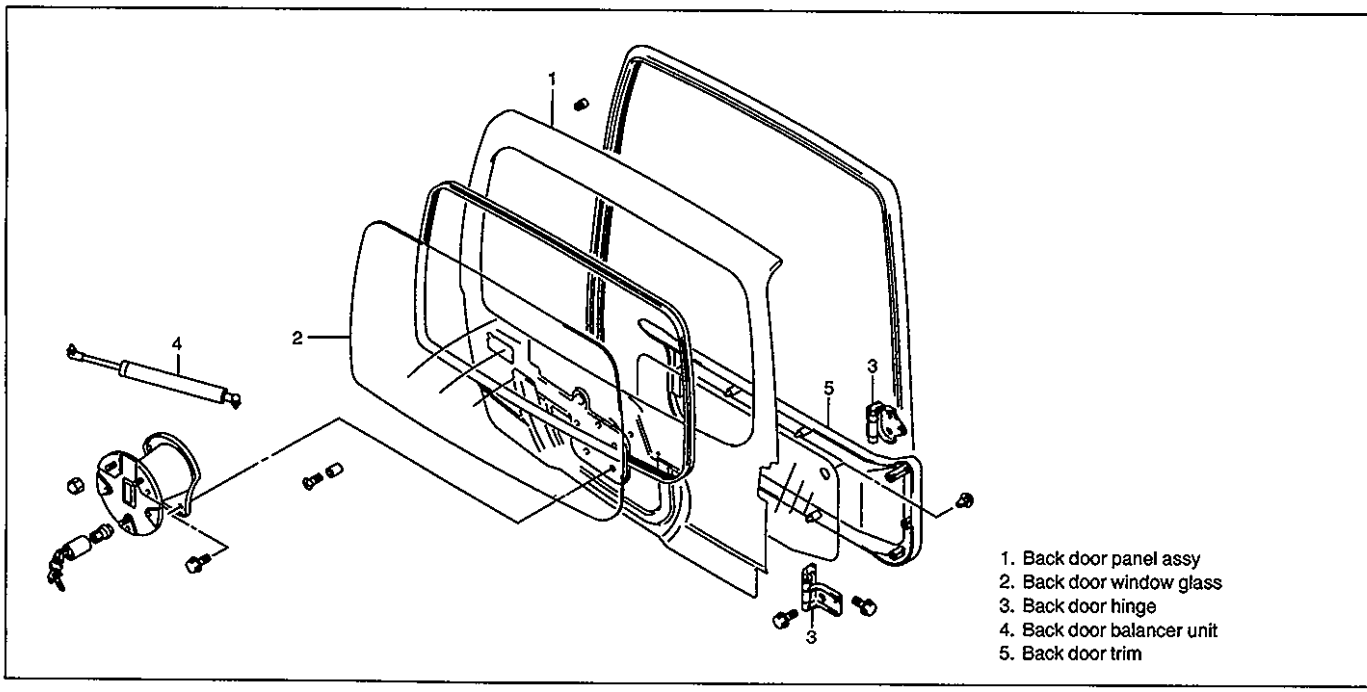

1. Back door panel assy
2. Back door window glass
3. Back door hinge
4. Back door balancer unit
5. Back door trim

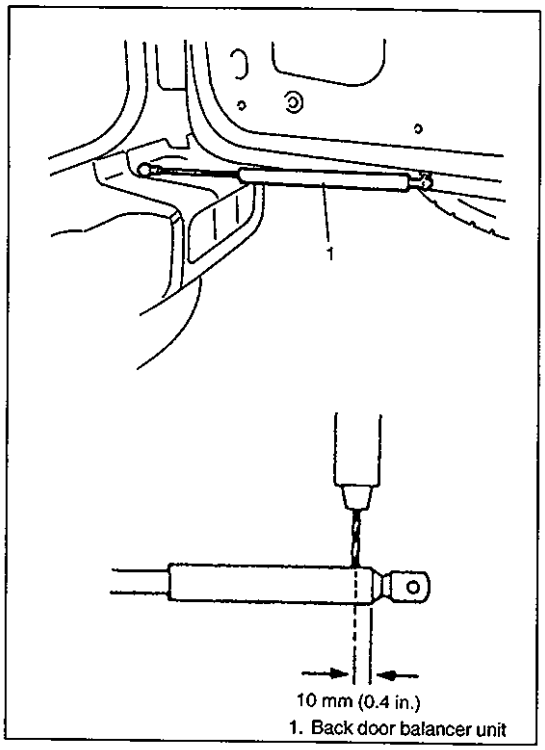

1. Back door balancer unit

REMOVAL

1) Remove back door trim, and door sealing cover, refer to steps 1) to 4) of BACK DOOR LOCK ASSEMBLY in this section.
2) Remove wire harness connector inside the back door.
3) Remove back door balancer (first at its door-side and next at its body-side), as shown.

WARNING:
Handling of Back Door Balancer (Damper)
- **Do not disassemble balancer because its cylinder is filled with gas.**
- **The gas itself is harmless but it may issue out of the hole together with chips generated by the drill. There fore, be sure to wear goggle.**
- **When discarding removed back door balancer (damper), use a 2 to 3 mm (0.08 to 0.12 in.) drill to make a hole as shown.**
- **Handle balancer carefully. Do not scar or scratch exposed surface of its piston rod, and never allow any paint or oil to stick to its surface.**
- **Do not turn piston rod with balancer fully extended.**

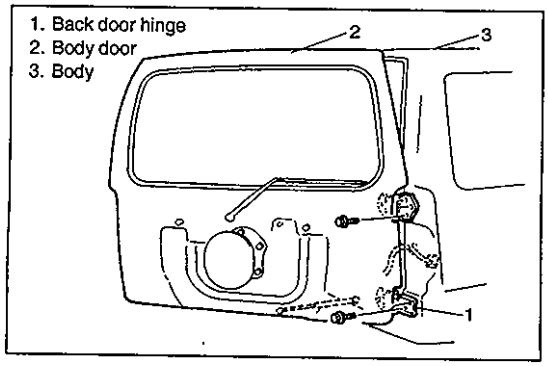

4) Remove combination lamp.
5) Remove door hinge bolts and door.

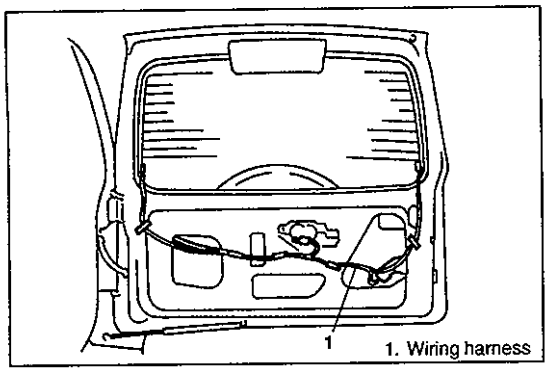

INSTALLATION

Reverse removal procedure to install back door noting following points.

- Secure wiring harness.

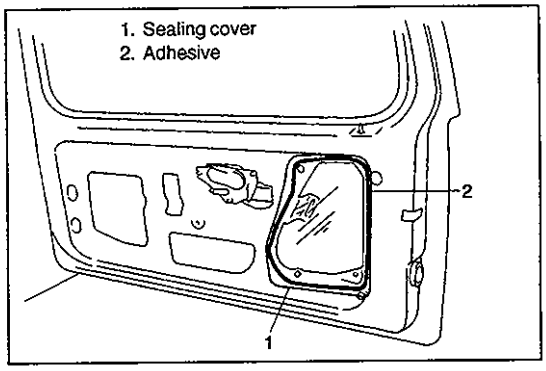

- Secure door sealing cover.

NOTE:
Use adhesive to seal sealing cover to back door.

- Adjust door latch striker position by referring "BACK DOOR LOCK ASSEMBLY INSTALLATION" so that door is positioned correctly.
- Adjust door cushion so that door contacts body when closed.

UNDER BODY DIMENSIONS

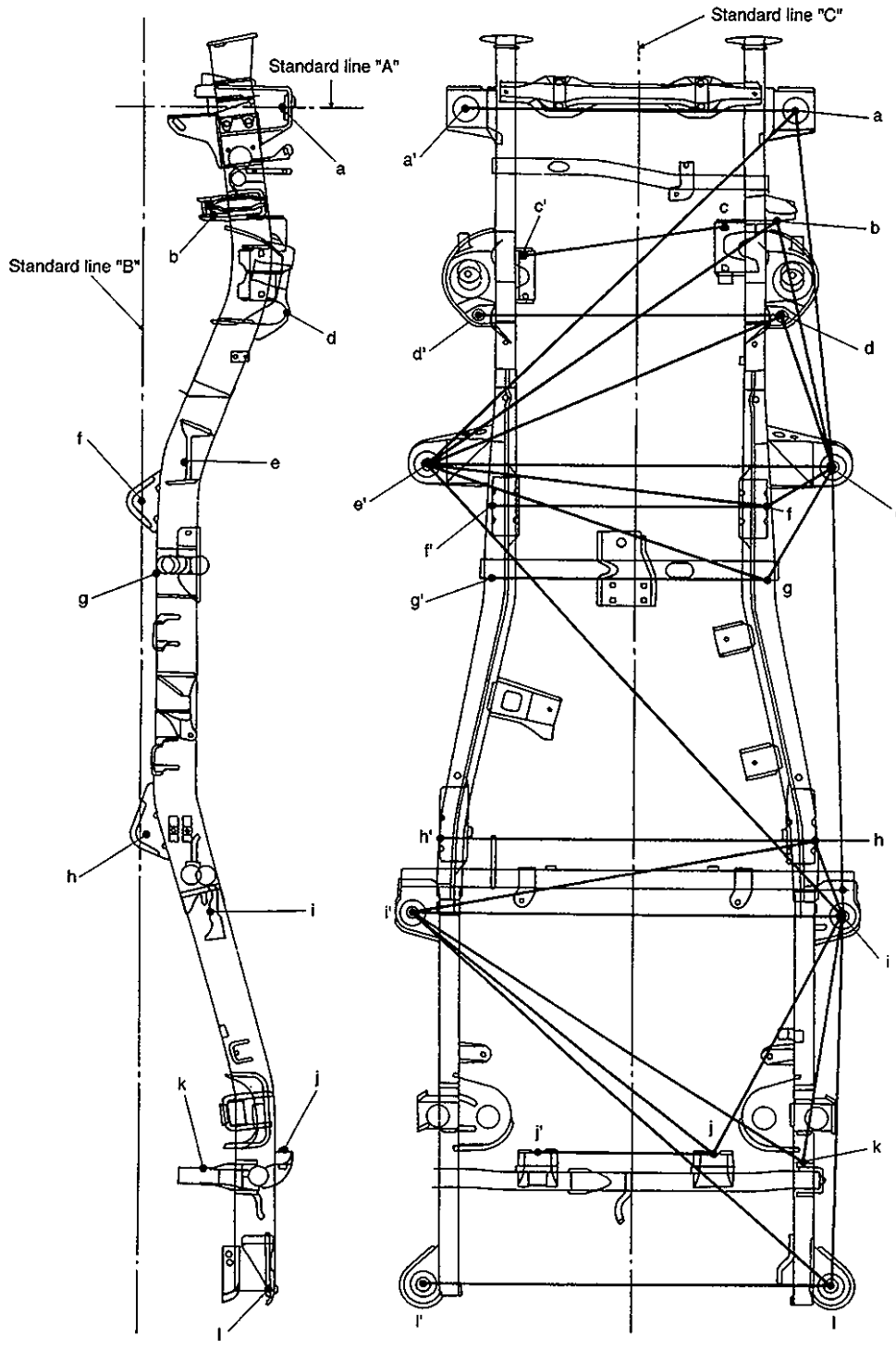

a, a' 1st mounting installation hole
b Lateral rod rear section installation hole
c, c' Engine mounting installation hole
d, d' Front shook absorber installation
e, e' 2nd mounting installation
f, f' Front suspension arm installation hole
g, g' Zig hole
h, h' Rear suspension arm installation hole
i, i' 3rd mounting installation hole
j, j' Rear shock absorber installation hole
k Lateral rod front section installation hole
l, l' 4th mounting installation hole

Projection Dimension

Measurement Position	Length from line "A" mm (in.)	Length from line "B" mm (in.)	Length from line "C" mm(in.)
a	0 (0)	368 (14.49)	425 (16.73)
b	285 (11.22)	156 (6.14)	397 (15.63)
c	302 (11.89)	335 (13.19)	241 (9.49)
d	532 (20.94)	368 (14.49)	390 (15.35)
e	920 (36.22)	113 (4.45)	520 (20.47)
f	1025 (40.35)	0 (0)	356 (14.02)
g	1215 (47.83)	36 (1.42)	355 (13.98)
h	1900 (74.80)	16 (0.63)	481 (18.94)
i	2098 (82.60)	182 (7.17)	553 (21.78)
j	2719 (107.05)	370 (14.57)	226 (8.90)
k	2765 (108.86)	101 (3.98)	481 (18.94)
l	3065 (120.67)	325 (12.80)	523 (20.59)

Measurement Dimension

Measurement Position	Length mm (in.)	Measurement Position	Length mm(in.)
a – a'	850 (33.46)	g – e'	927 (36.50)
a – e'	1343 (52.87)	g – g'	710 (27.95)
a – e	960 (37.80)	h – h'	962 (37.87)
b – e'	117 (4.61)	h – i'	1066 (41.97)
b – e	649 (25.55)	h – i	268 (10.55)
c – c'	515 (20.28)	i – i'	1106 (43.54)
d – d'	780 (30.71)	i – j	727 (28.62)
d – e'	1022 (40.24)	i – k	676 (26.61)
d – e	482 (18.98)	i – e	978 (38.50)
e – e'	1040 (40.94)	j – i'	1014 (39.92)
e – f	225 (8.86)	k – i'	1233 (48.54)
e – g	347 (13.66)	j – j'	452 (17.80)
e – i	1181 (46.50)	l – i	1454 (57.24)
f – e'	889 (35.00)	l – l'	1064 (41.90)

BODY DIMENSIONS

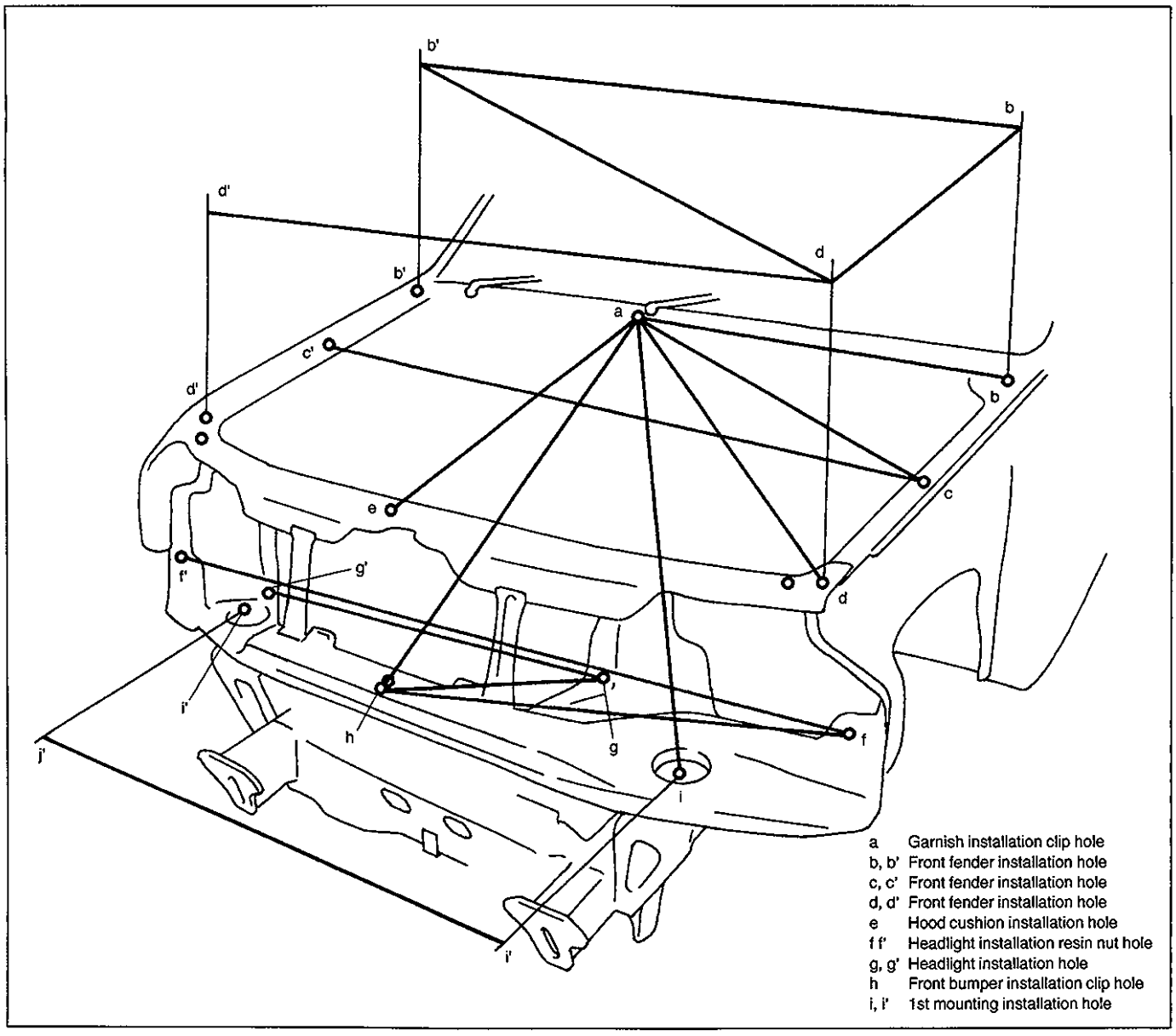

Measurement Dimension

Measurement Position	Length mm (in.)	Measurement Position	Length mm(in.)
a – b	660 (25.98)	c – c'	1222 (48.11)
a – c	664 (26.14)	d – b'	1166 (45.90)
a – d	833 (32.80)	d – d'	1393 (54.84)
a – i'	890 (35.04)	f – f'	1266 (49.84)
a – h	837 (32.95)	f – h	661 (26.02)
a – e	667 (26.26)	g – g'	654 (25.75)
b – b'	1266 (49.84)	g – h	351 (13.82)
b – d	681 (26.81)	i – i'	850 (33.46)

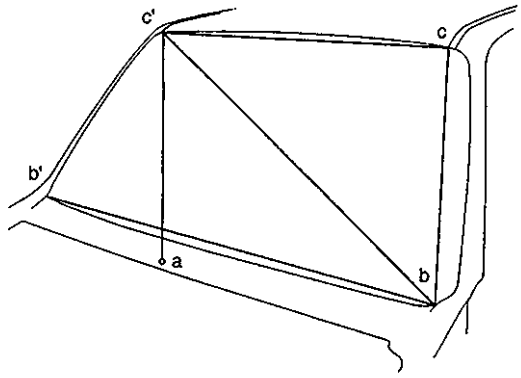

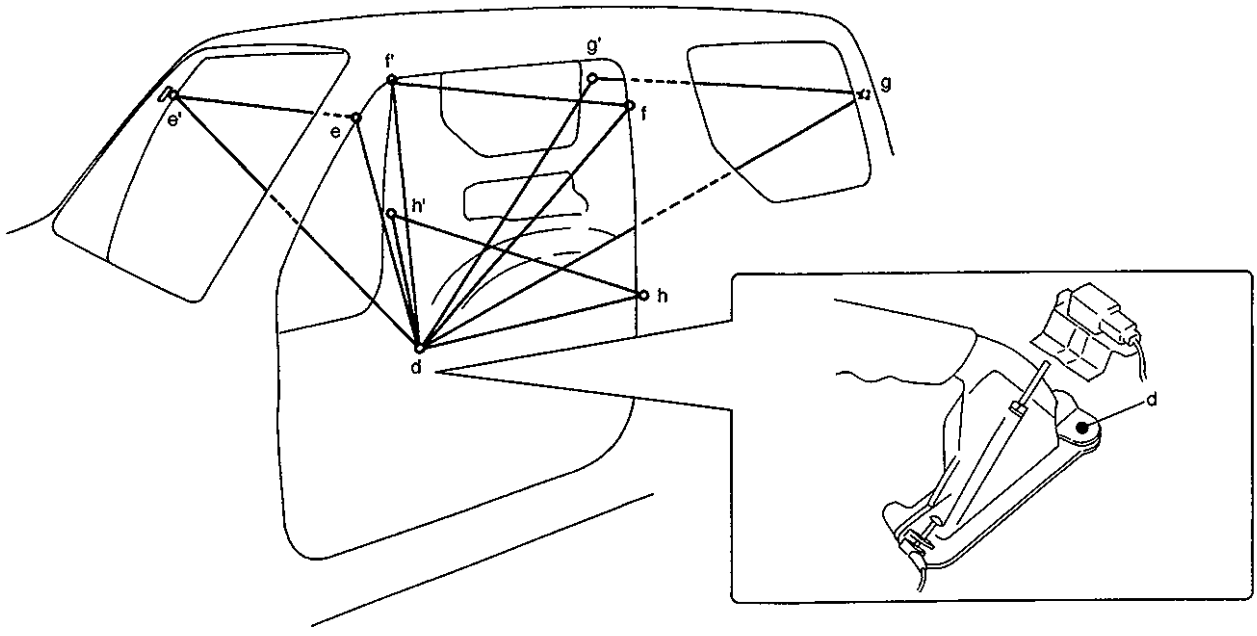

a Garnish installation clip hole
b, b' Front end of front windshield upper installation section
c, c' Front end of front windshield lower installation section
d Parking brake rear installation hole
e, e' Body outer panel clipping section
f, f' Body outer panel clipping section
g, g' Rear seat belt upper installation hole
h, h' Body outer panel Φ8 zig hole

Measurement Dimension

Measurement Position	Length mm (in.)	Measurement Position	Length mm(in.)
a – c'	902 (35.51)	d – g	1479 (58.23)
b – b'	1190 (46.85)	d – g'	1514 (59.61)
b – c	620 (24.41)	d – h	718 (28.27)
b – c'	1240 (48.82)	d – h'	795 (31.30)
c – c'	969 (38.15)	e – e'	1102 (43.39)
d – e	1179 (46.42)	f – f'	1127 (44.37)
d – e'	1221 (48.07)	g – g'	1103 (43.43)
d – f	1063 (41.85)	h – h'	1254 (49.37)
d – f'	1111 (43.74)		

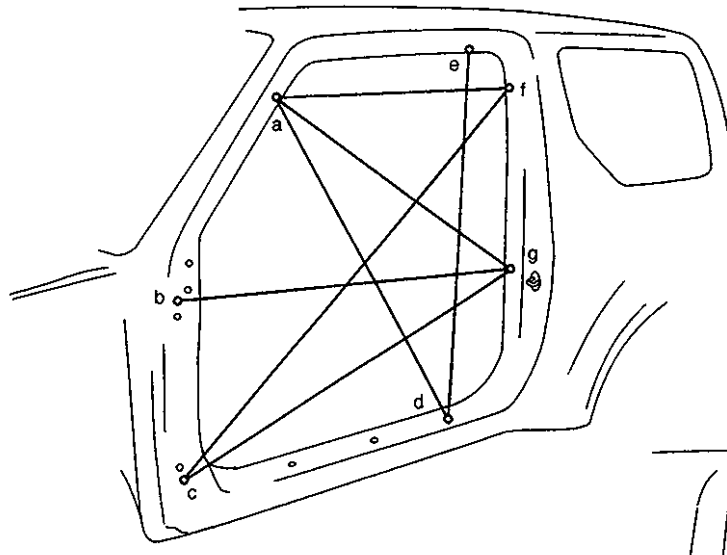

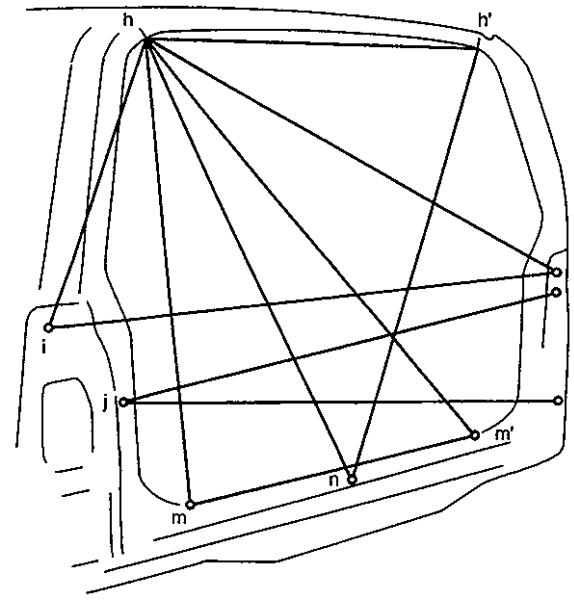

a Body outer panel clipping section
b Front door upper hinge in upper installation hole
c Front door lower hinge in lower installation hole
d Side sil scuff installation hole (rear end)
e Body outer panel Φ8 zig hole
f Body outer panel clipping section
g Body outer panel Φ8 zig hole
h, h' Rear end of roof panel upper installation section
i, i' Combination lamp upper installation hole
j Back door striker upper installation hole
k Back door upper hinge in upper installation hole
l Back door lower hinge in lower installation hole
m, m' Rear end of piller outer panel inside installation section
n Rear bumper installation hole

Measurement Dimension

Measurement Position	Length mm (in.)	Measurement Position	Length mm(in.)
a – d	1094 (43.07)	h – i'	1186 (46.69)
a – f	683 (26.89)	h – m	896 (35.28)
a – g	861 (33.90)	h – m'	1224 (48.19)
b – g	1099 (43.27)	h – n	1024 (40.31)
c – f	1428 (56.22)	i – i'	1297 (51.06)
c – g	1162 (45.75)	j – k	1136 (44.72)
d – e	1074 (42.28)	j – l	1160 (45.67)
h – h'	867 (34.13)	m – m'	804 (31.65)
h – i	540 (21.26)	n – n'	1033 (40.67)

INSTRUMENTATION AND DRIVER INFORMATION

INSTRUMENT PANEL

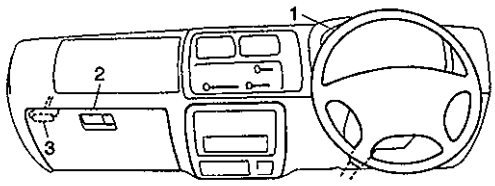

1. Steering column assembly
2. Glove box
3. Engine hood opener

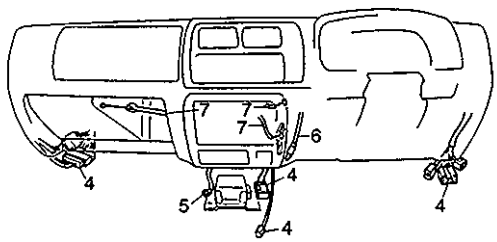

4. Wire harness coupler
5. Body ground
6. Antenna wire
7. Heater control cable

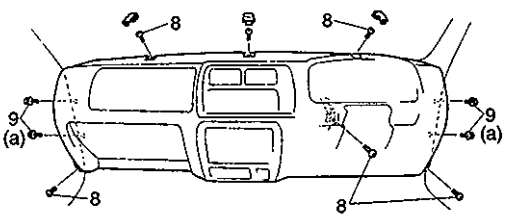

8. Screw
9. Bolts

Tightening Torque
(a): 23 N·m (2.3 kg-m, 17.0 lb-ft)

WARNING:
See WARNING at the beginning of this section.

REMOVAL

1) Disconnect negative (–) cable at battery.
2) Disable air bag system, if equipped. Refer to "Disabling Air Bag System" in Section 10B.
3) Remove glove box and column hole cover.
4) Disconnect wires and cables from heater unit and air inlet box assembly.
5) Remove steering column assembly. Refer to Section 3C.
6) Disconnect speedometer connector and remove speedometer assembly.
7) Remove engine hood opener.
8) Disconnect couplers which need to be disconnected for removal for instrument panel.
9) Remove instrument panel mounting screws.
10) Remove instrument panel mounting bolt.
11) Remove instrument panel.

CAUTION:
For vehicle with Air Bag, instrument panel could not be removed with SDM coupler connected.
Use are not to damage Air Bag harness.

INSTALLATION

1) Install instrument panel by reversing removal procedure, noting the following items.
   - When installing each part, be careful not to catch any cable or wiring harness.
   - When installing steering column assembly, refer to Section "STEERING COLUMN INSTALLATION" in Section 3C.
2) Adjust control cables. (Refer to Section 1A "HEATER CONTROL CABLES".)
3) Enable air bag system if equipped. Refer to "Enabling Air Bag System" in Section 10B.

SEATS

FRONT SEAT AND REAR SEAT

FrontSeat

1. Seat cushion
2. Seat back
3. Reclining ass'y (RH side)
4. Reclining ass'y (LH side)
5. Seat adjuster (RH outside)
6. Seat adjuster (RH inside)
7. Seat adjuster (LH outside)
8. Seat adjuster (LH inside)

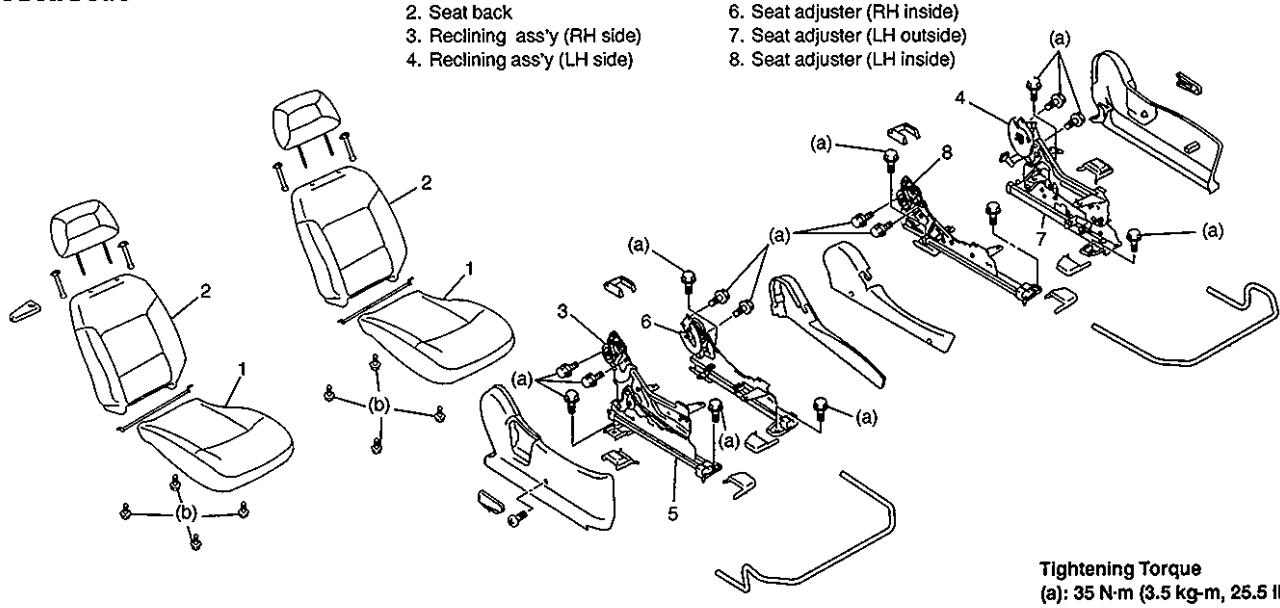

Tightening Torque
(a): 35 N·m (3.5 kg-m, 25.5 lb-ft)
(b): 23 N·m (2.3 kg-m, 17.0 lb-ft)

RearSeat

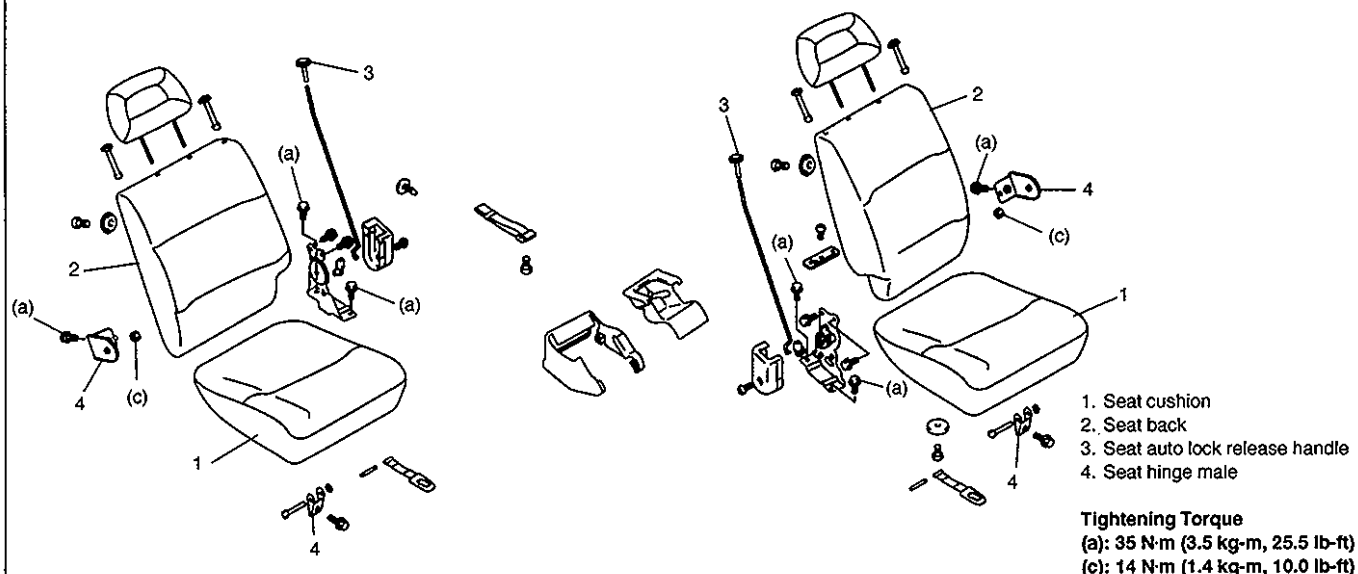

1. Seat cushion
2. Seat back
3. Seat auto lock release handle
4. Seat hinge male

Tightening Torque
(a): 35 N·m (3.5 kg-m, 25.5 lb-ft)
(c): 14 N·m (1.4 kg-m, 10.0 lb-ft)

INSTALLATION

Reverse removal procedure to install front seat.
Torque to specifications, as shown.

REMOVAL

1) Remove four mounting bolt to remove seat cushion.
2) Remove four mounting bolts to remove seat back.
3) Disassemble and repair seat as necessary.

PAINT AND COATINGS

ANTI-CORROSION TREATMENT

WARNING:
Standard shop practices, particularly eye protection, should be followed during the performance of the below-itemized operations to avoid personal injury.

As rust proof treatment, steel sheets are given corrosion resistance on the interior and/or exterior.
These corrosion resistance steel sheet materials are called one of two-side galvanized steel sheets.
It is for the sake of rust protection that these materials are selected and given a variety of treatments as described blow.

1) Steel sheets are treated with cathodic electroprimer which is excellent in corrosion resistance.
2) Rust proof wax coatings are applied to door and side sill insides where moisture is liable to stay.
3) Vinyl coating is applied to body underside and wheel housing inside.
4) Sealer is applied to door hem, engine compartment steel sheet-to-steel sheet joint, and the like portions to prevent water penetration and resulting in rust occurrence.

In panel replacement or collision damage repair, leaving the relevant area untreated as it is in any operation which does disturb the above-mentioned rust proof treatment will cause corrosion to that area. Therefore, it is the essential function of any repair operation to correctly recoat the related surfaces of the relevant area.
All the metal panels are coated with metal conditioners and primer coating during vehicle production. Following the repair and/or replacement parts installation, every accessible bare metal surface should be cleaned and coated with rust proof primer. Perform this operation prior to the application of sealer and rust proof wax coating.
Sealer is applied to the specific joints of a vehicle during production. The sealer is intended to prevent dust from entering the vehicle and serves also as an anti-corrosion barrier. The sealer is applied to the door and hood hem areas and between panels. Correct and reseal the originally sealed joints if damaged. Reseal the attaching joints of a new replacement panel and reseal the hem area of a replacement door or hood.
Use a quality sealer to seal the flanged joints, overlap joints and seams. The sealer must have flexible characteristics and paint ability after it's applied to repair areas.
For the sealer to fill open joints, use caulking material. Select a sealer in conformance with the place and purpose of a specific use. Observe the manufacturer's label-stand instructions when using the sealer.
In many cases, repaired places require color painting. When this is required, follow the ordinary techniques specified for the finish preparation, color painting and undercoating build-up.
Rust proof wax, a penetrative compound, is applied to the metal-to-metal surfaces (door and side sill insides) where it is difficult to use ordinary undercoating material for coating. Therefore, when selecting the rust proof wax, it may be the penetrative type.
During the undercoating (vinyl coating) application, care should be taken that sealer is not applied to the engine-related parts and shock absorber mounting or rotating parts. Following the under coating, make sure that body drain holes are kept open.
he sequence of the application steps of the anti-corrosion materials are as follows:

1) Clean and prepare the metal surface.
2) Apply primer.
3) Apply sealer (all joints sealed originally).
4) Apply color in areas where color is required such as hem flanges, exposed joints and under body components.
5) Apply anticorrosion compound (penetrative wax).
6) Apply undercoating (rust proof material).

When the welding or heating operation causes the original galvanization or other anticorrosive materials to be burnt, the interior and under-body panel surfaces must be cleaned.
Removal of residues of the burning should be carried out carefully when the relevant place has box type construction or has shape which limits the access to the interior surfaces. In general, the following method can be used satisfactorily for the removal of those residues.

Scrape the accessible places. If a standard putty knife or scraper does not fit to the elevant place, consider to use a more flexible scraper to a place narrowly enclosed by sheet metals.
A jet of compressed air can remove most residues, and is effective to limited areas.
However, this type of operation absolutely requires eye protection.

METAL REPLACEMENT PARTS FINISHING

The metal service replacement parts (or assemblies) are coated with electro-deposition primer.
For the proper adhesion of a paint, the following finish process (refinish steps) becomes necessary.

1) Use wax or grease-removing solvent to clean the part.
2) Use a wet or dry sand-paper (No. 400) to polish the panel lightly. DO not polish it forcibly to produce any scratch. Clean the part again.
3) If factory-applied primer coating is cut through to the bare metal, apply metal conditioner to the bare metal exposed to open air. As for method of use of the metal conditioner, follow directions on the container.
4) Apply primer-surfacer to the part completely dry before starting sand-paper polishing. As for drying time, follow directions advised on the primer-surfacer container.
5) Use a wet or dry sand-paper (No. 400) and water to polish the panel lightly.
6) Wash the part again.
7) Apply color, coating to the part.
8) Different paints demand different drying methods. Hence, follow directions advised on the pertinent paint container.
9) When lacquer coating (quick-drying paint coating) is applied, dry coated surface and polish it with compound.
   In the case of the melamine or acrylic coating, compound polishing can be omitted after drying.
10) If the case of lacquer coating, wax should not be applied to coated surface until the surface has dried completely (for approx. two months).

Before replacing exterior parts or assemblies, check paint conditions of all the covered or hidden interior surfaces. If any rust scale is found at these places, proceed as follows:

1) Use a proper wire brush, adhesive or liquid rust removing agent to remove rust. As for the method of use, follow directions advised for respective materials.
2) If necessary, wash parts with detergent, rinse, and dry them.
3) Before installing exterior body parts, apply anticorrosive compound to all cleaner surfaces of exterior body parts. Also, apply anticorrosive compound to inner surfaces of exterior body parts to be installed.

SEALANT APPLICATION AREA

➤ **Apply sealant to pointed area**

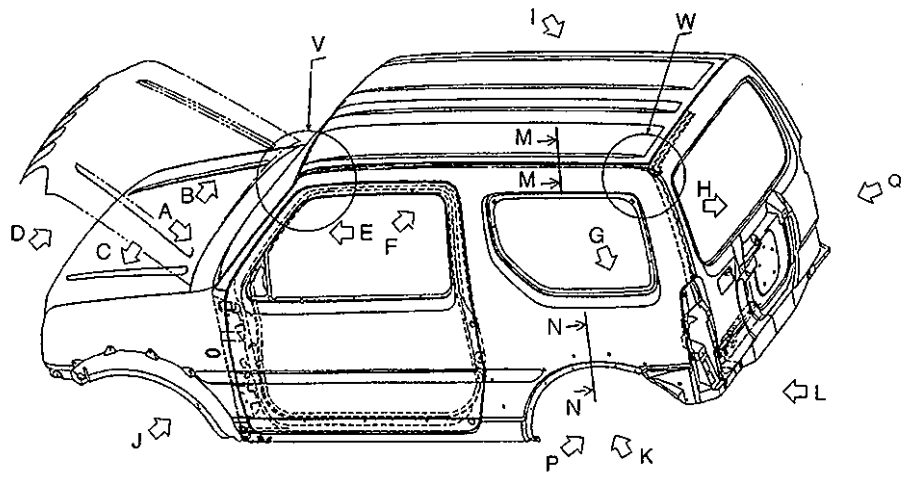

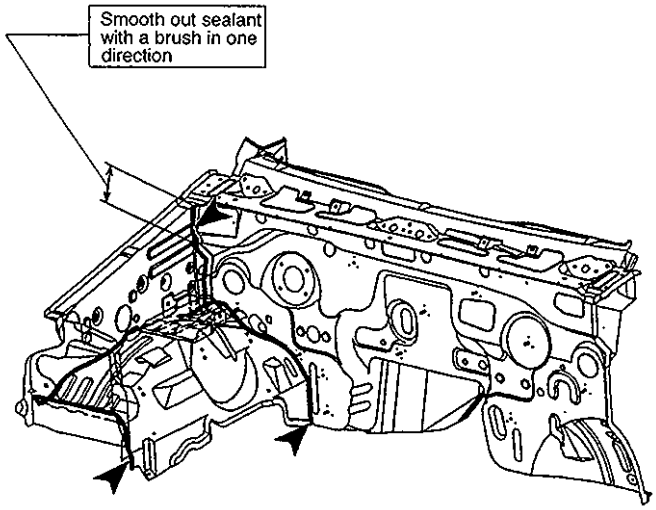

VIEW : B

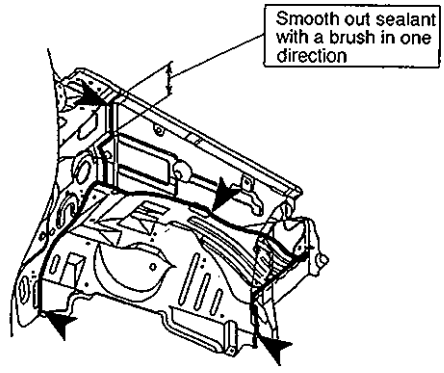

VIEW : C

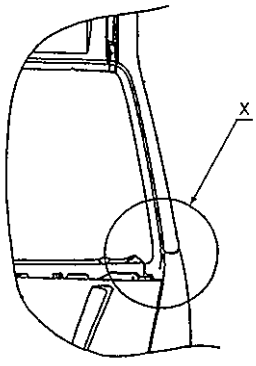

VIEW : A

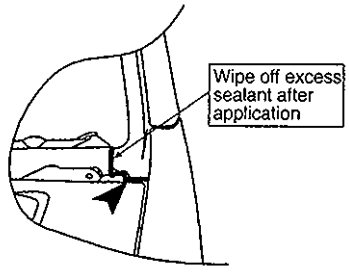

DETAIL : X

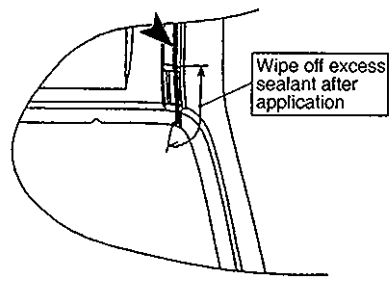

DETAIL : V

➤ **Apply sealant to pointed area**

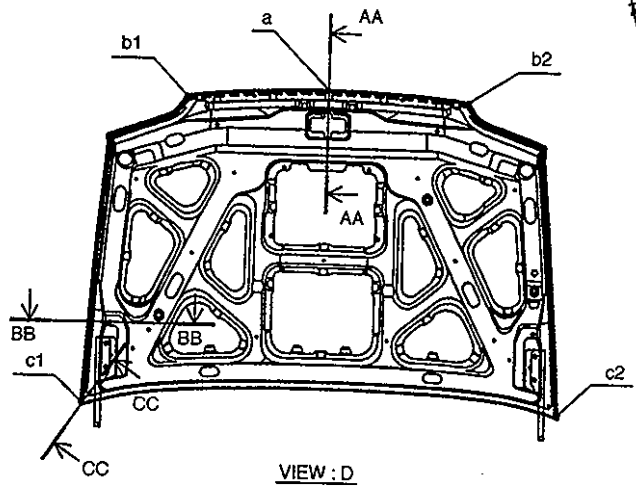

VIEW : D

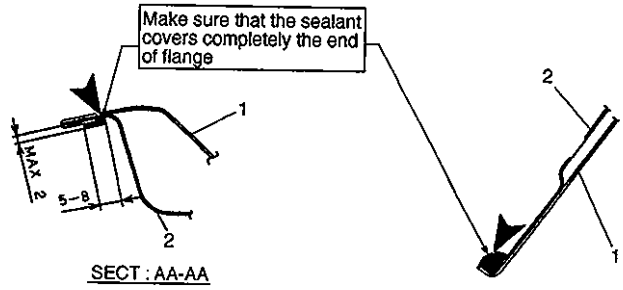

SECT : AA-AA

SECT : CC-CC

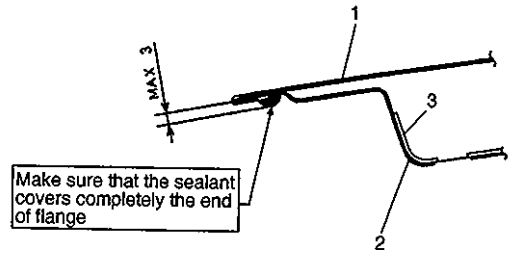

SECT : BB-BB

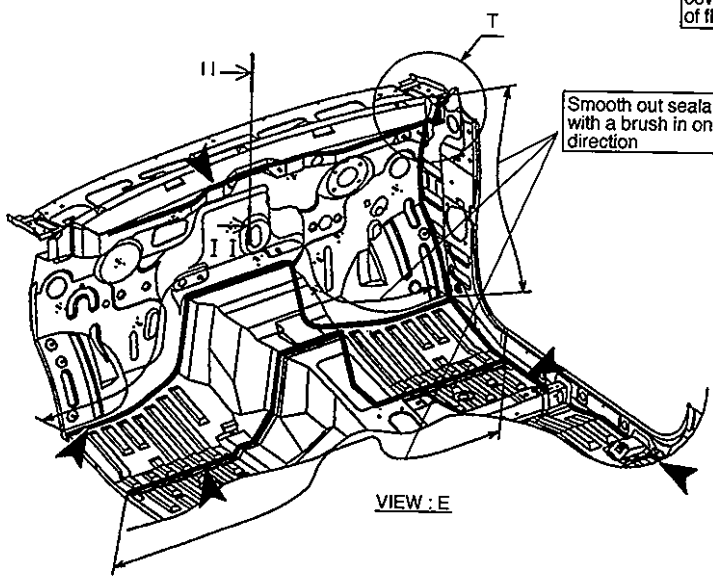

VIEW : E

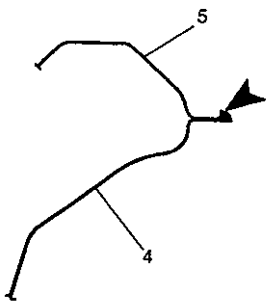

SECT : I-I

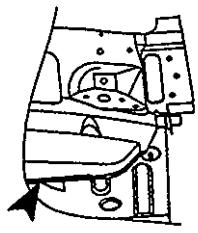

DETAIL : T

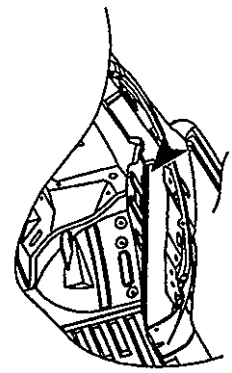

VIEW : J

1. Hood outer panel
2. Hood inner panel
3. Hood hige reinforcement
4. Dash panel
5. Cowl top panel

➤ **Apply sealant to pointed area**

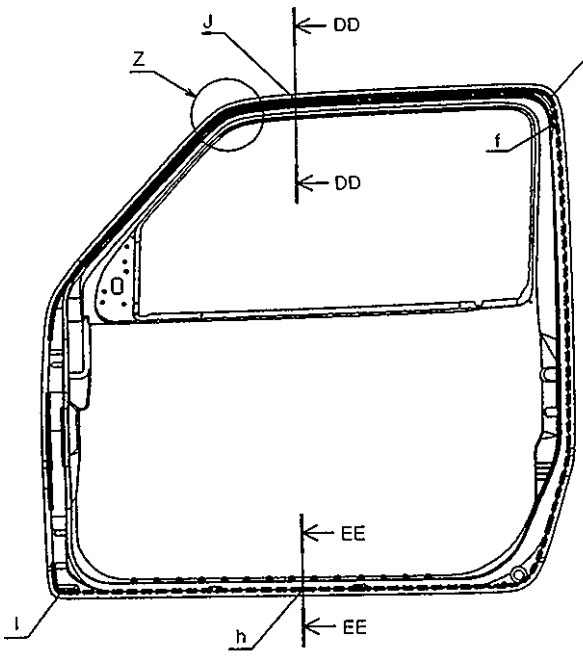

VIEW : F

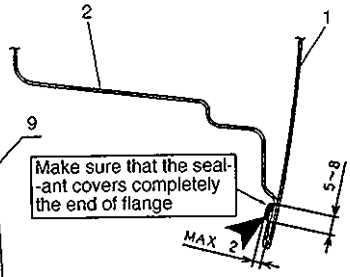

SECT : EE - EE

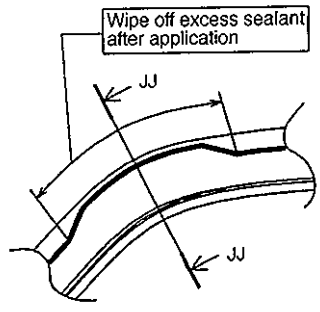

DETAIL : Z

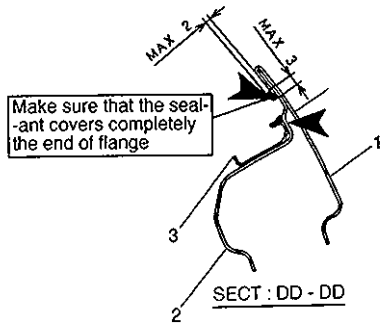

SECT : DD - DD

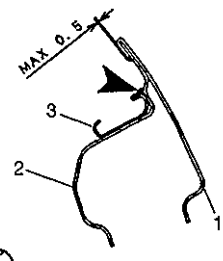

SECT : JJ - JJ

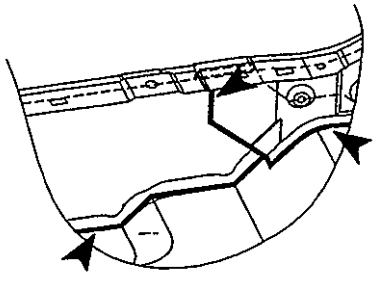

DETAIL : Y

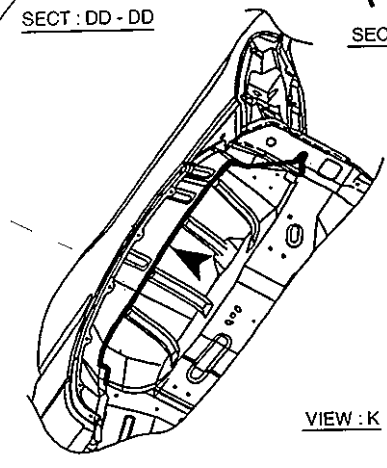

VIEW : K

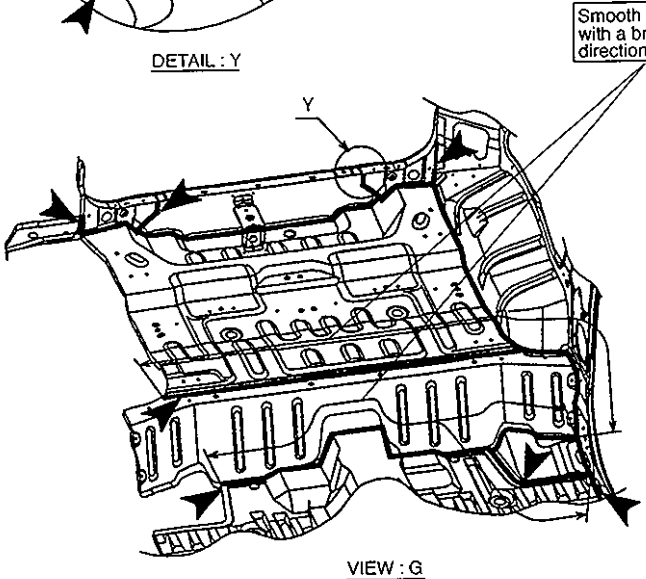

VIEW : G

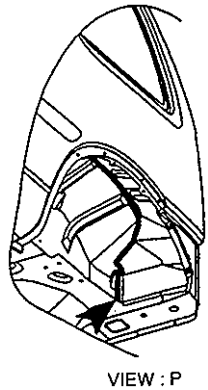

VIEW : P

1. Front door outer panel
2. Front door inner panel
3. Door weatherstrip rail

Apply sealant to pointed area

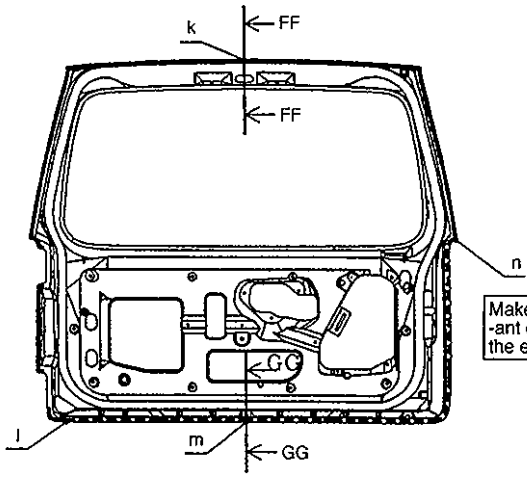

VIEW : H

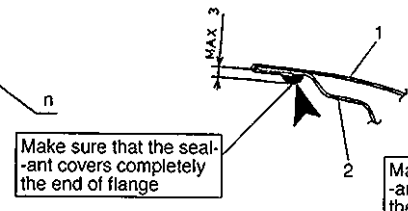

SECT : FF - FF

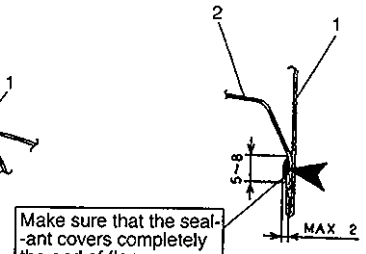

SECT : GG - GG

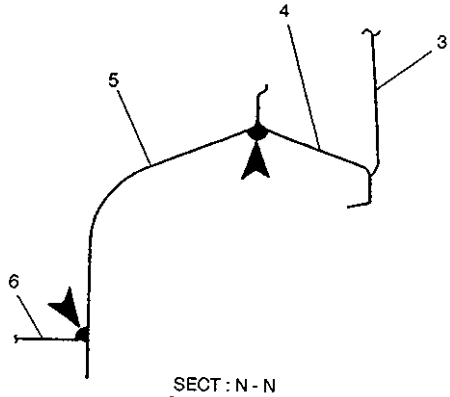

SECT : N - N

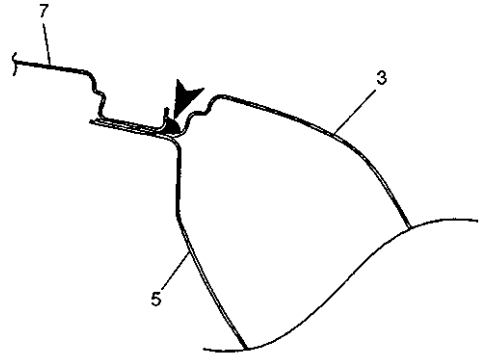

SECT : M - M

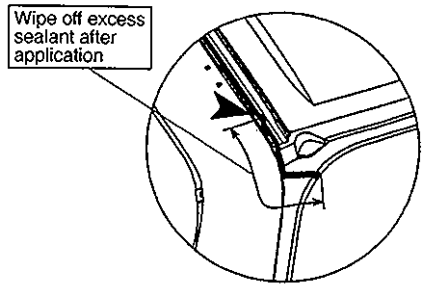

DETAIL : W

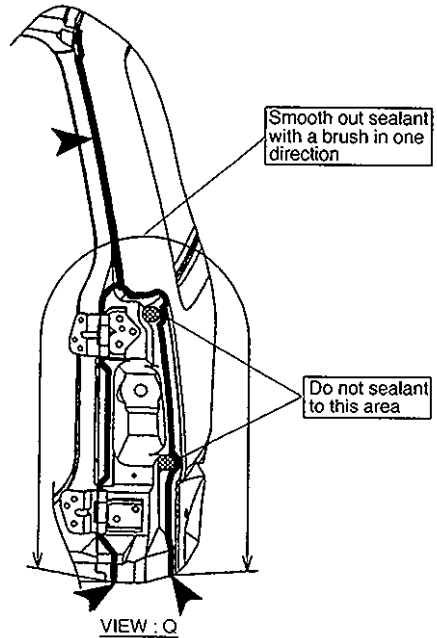

VIEW : Q

1. Back door outer panel
2. Back door inner panel
3. Side body outer panel
4. Rear wheel housing outer panel
5. Rear quarter inner panel
6. Rear floor panel
7. Roof panel

➤ **Apply sealant to pointed area**

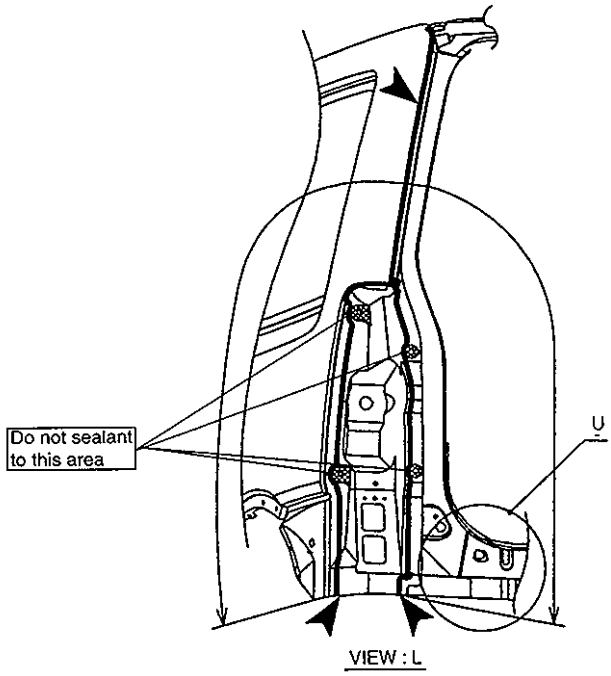

VIEW : L

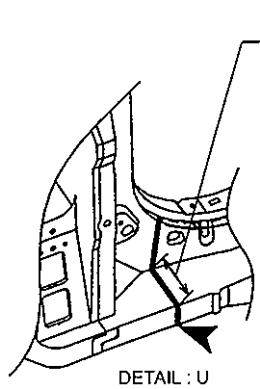

DETAIL : U

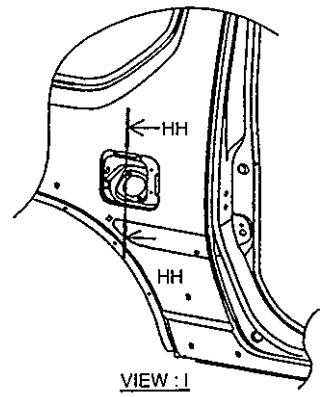

VIEW : I

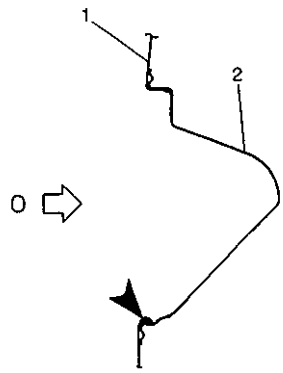

SECT : HH - HH

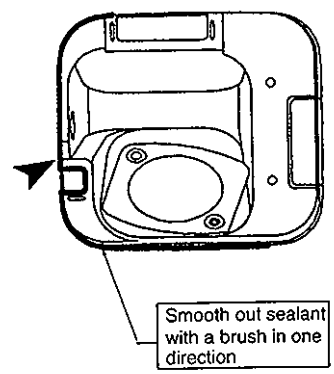

VIEW : O

1. Side body outer panel
2. Fuel inlet box

UNDER COATING/ANTI-CORROSION COMPOUND APPLICATION AREA

//// Apply rustproof wax to shaded area
(Over 50 μm)

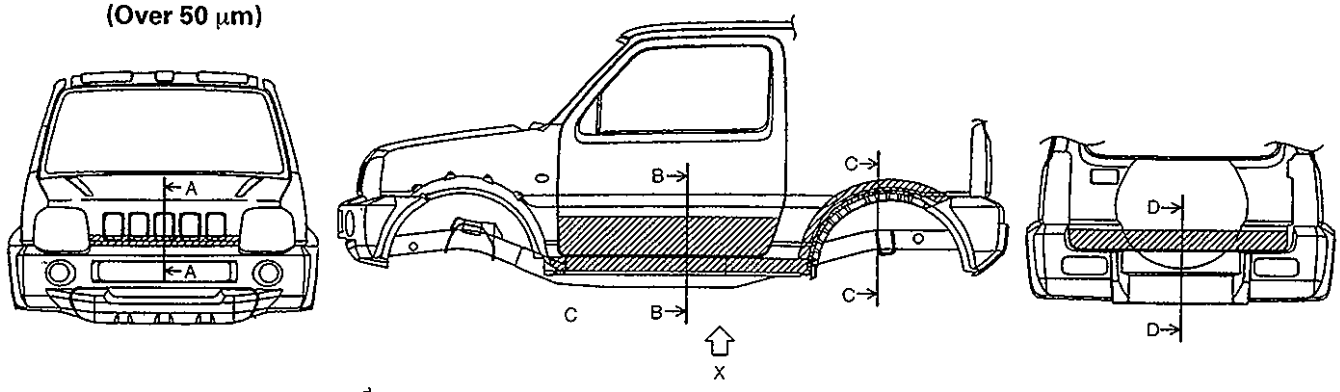

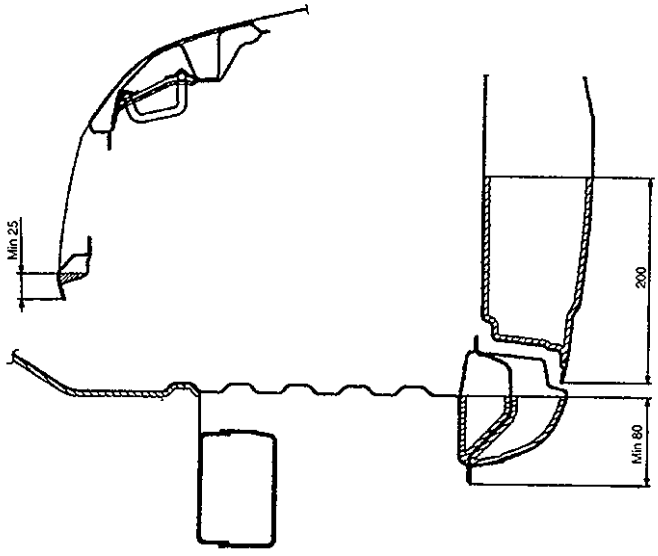

SECT : B - B

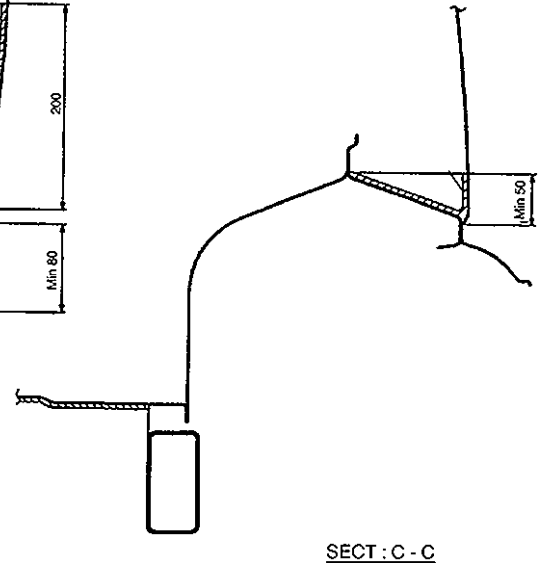

SECT : C - C

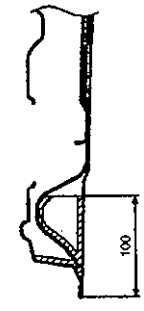

SECT : D - D

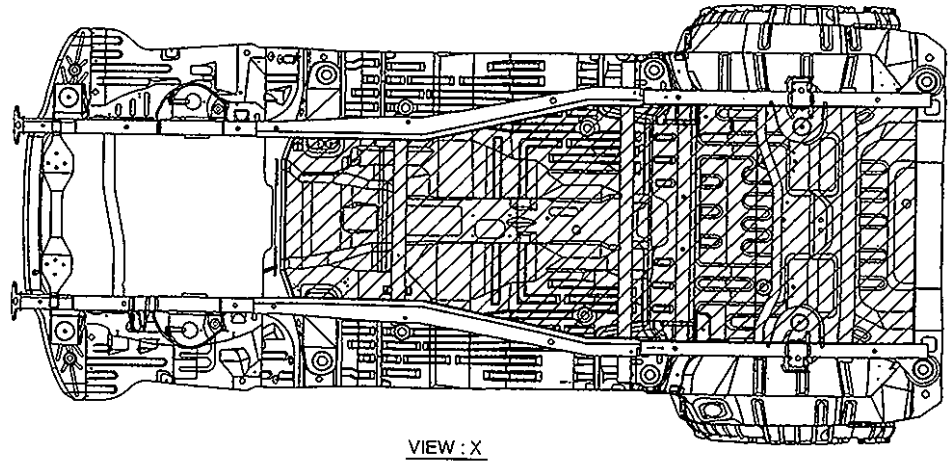

VIEW : X

//// **Apply undercoating to shaded area (Over 400 μm)**

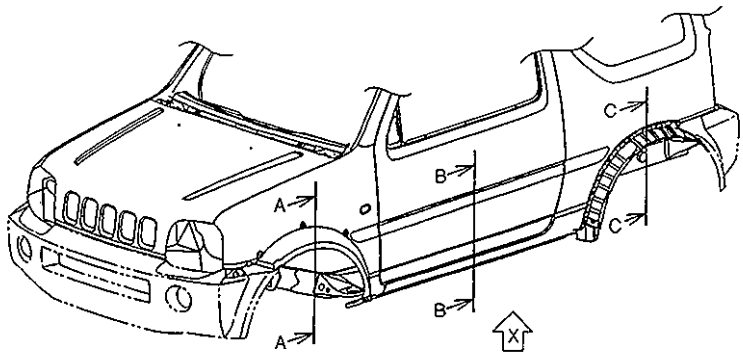

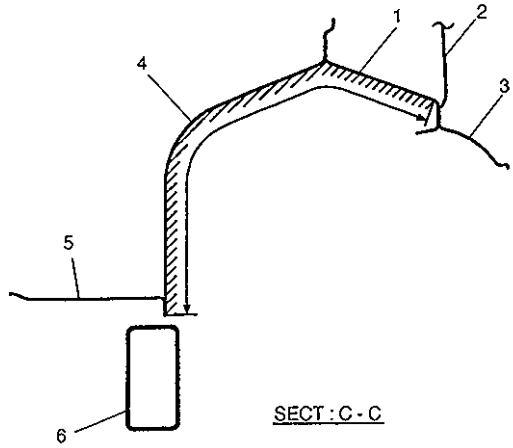

SECT : C - C

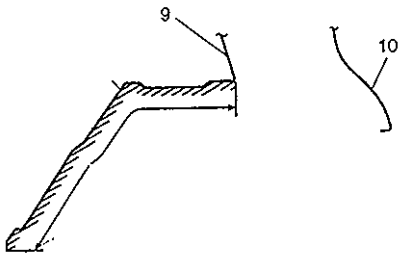

SECT : A - A

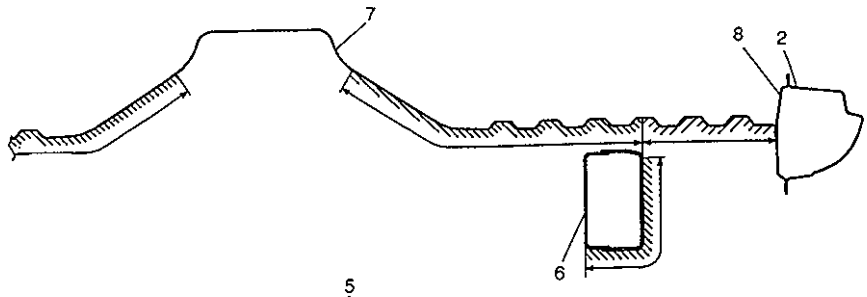

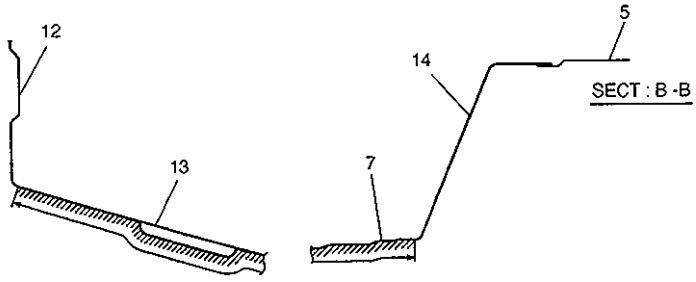

SECT : B - B

SECT : D - D

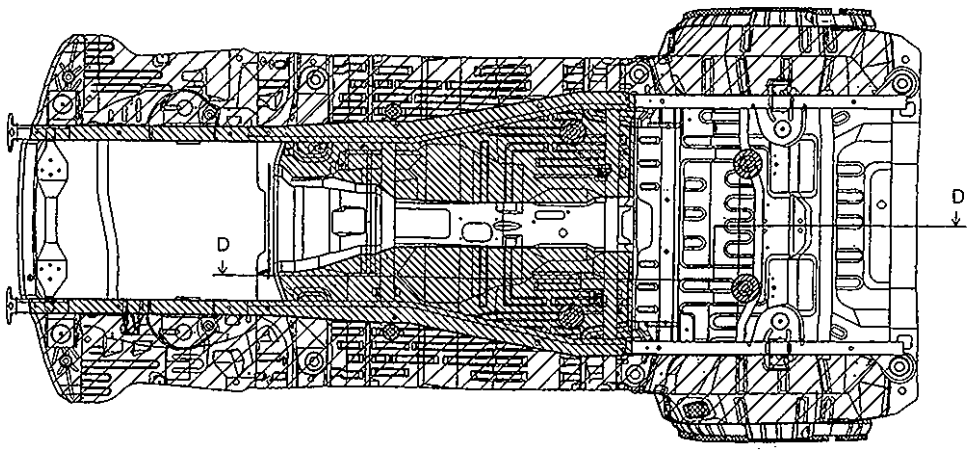

1. Rear wheel housing
2. Side body outer
3. Rear splash guard holder
4. Rear quarter inner
5. Rear floor
6. Frame
7. Main floor
8. Side sill inner
9. Front fender apron
10. Front fender
11. Front wheel housing
12. Dash panel
13. Tunnel front
14. Center floor

SECURITY AND LOCKS

FRONT DOOR LOCK ASSEMBLY

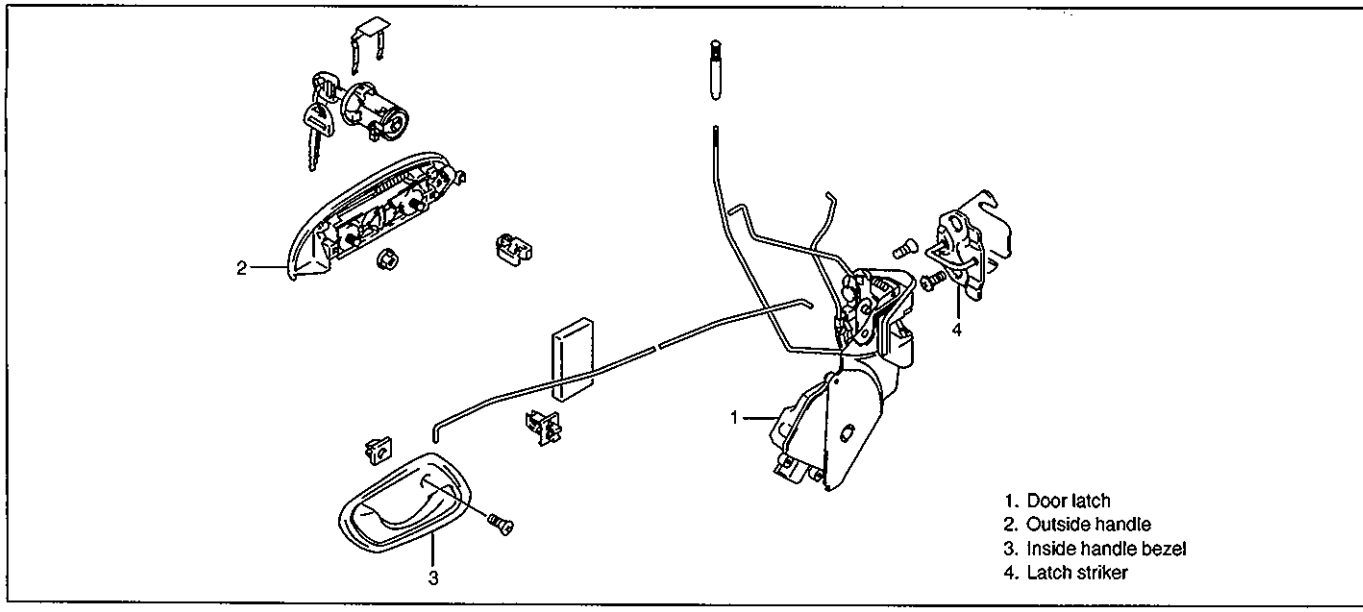

REMOVAL

1) Raise window all the way up.
2) Remove door trim and door sealing cover, refer to steps 1) to 9) of FRONT DOOR GLASS REMOVAL in this section.
3) Remove door sash.

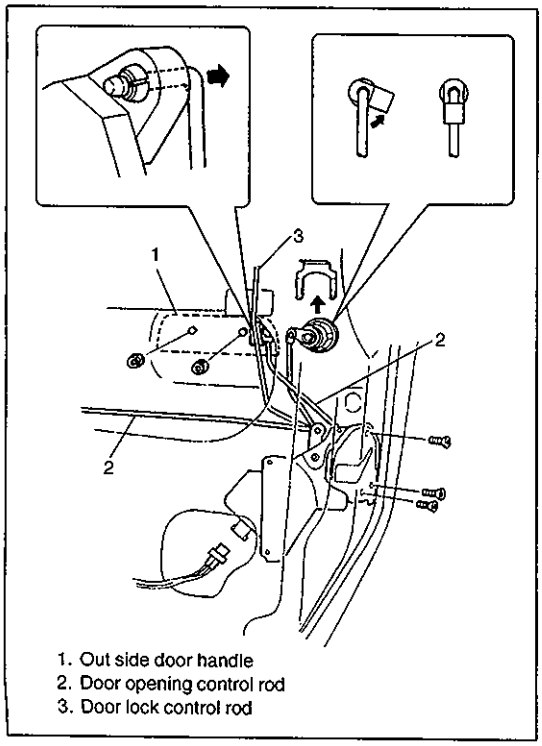

4) Remove door opening control rods.
5) Disconnect control rod.
6) Disconnect door lock motor lead wire.
7) Remove lock assembly.

INSTALLATION

To install front door lock, reverse removal procedure, noting following.

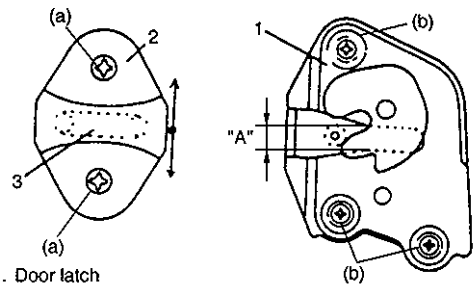

1. Door latch
2. Door latch striker
3. Shaft

- Door latch striker.
  Move door latch striker up or down so its center aligns with the center of groove "A" on the door, as shown.

  NOTE:
  Striker should be moved vertically and placed level. Do not adjust door lock.

  Tightening Torque
  (a): 10 N·m (1.0 kg-m, 7.2 lb-ft)
  (b): 6 N·m (0.6 kg-m, 4.3 lb-ft)

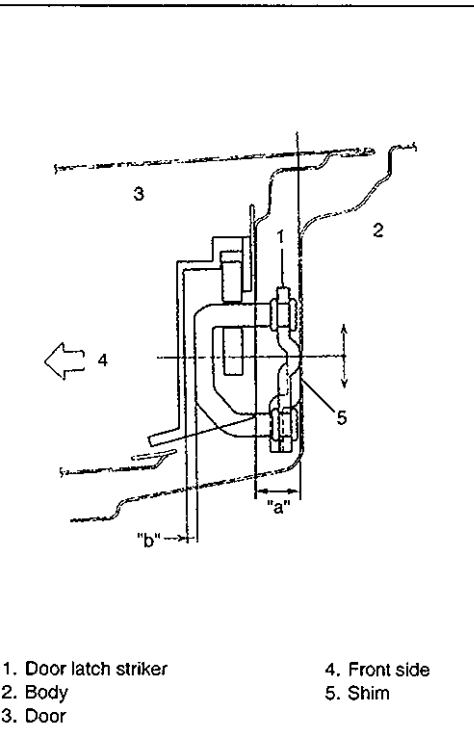

1. Door latch striker
2. Body
3. Door
4. Front side
5. Shim

- Move door latch striker sideways to adjust door surface flush with body surface, as shown.
  In order to correctly obtain door latch striker position in the fore-and-aft direction, increase or decrease number of shims inserted between body and striker to adjust it.

  Dimension "a": 13.3 – 14.8 mm (0.52 – 0.58 in.)
  "b": 3.2 – 5.2 mm (0.13 – 0.2 in.)

  NOTE:
  Apply oil or grease to striker joints periodically.

BACK DOOR LOCK ASSEMBLY

REMOVAL

1) Remove inside lock knob.
2) Remove door trim.

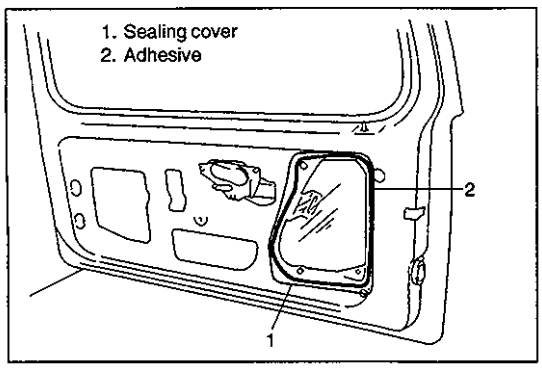

3) Remove door sealing cover.

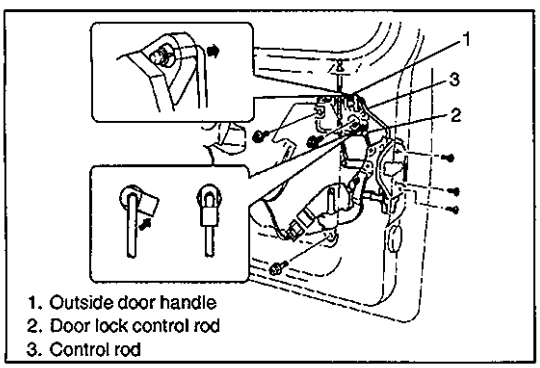

4) Remove door lock control rod.
5) Disconnect control rod.
6) Disconnect door lock motor lead wire.
7) Remove lock assembly.

INSTALLATION

Reverse removal procedure to install back door lock assembly noting following points.

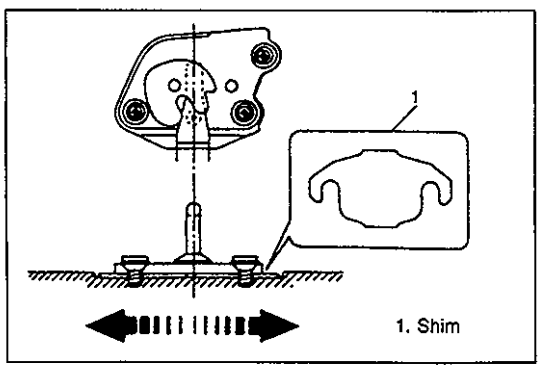

- Door latch striker.
  Adjust door latch striker so that its center aligns with the center of groove in door latch base.
  To adjust door latch and striker with each other, insert proper number of shims below the bottom of striker, as shown.

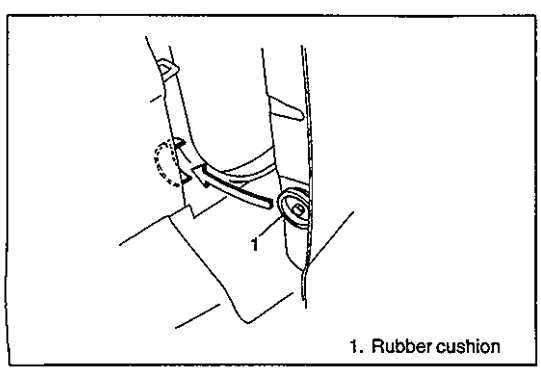

- Door rubber cushion.
  Move rubber cushion installed at the left side of back door to align it with its guide.

EXTERIOR AND INTERIOR TRIM

SPLASH GUARD

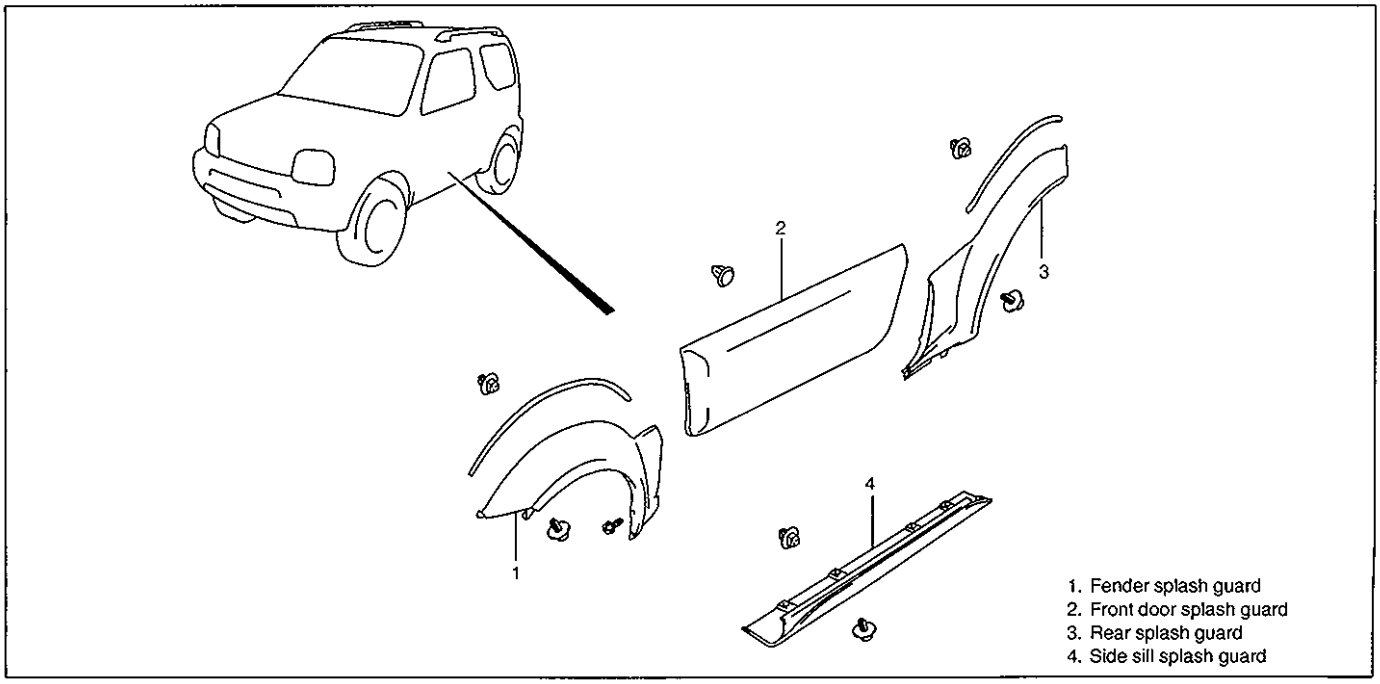

Removal and Installation

Remove and install as shown in figure.

ROOF RAIL (IF EQUIPPED)

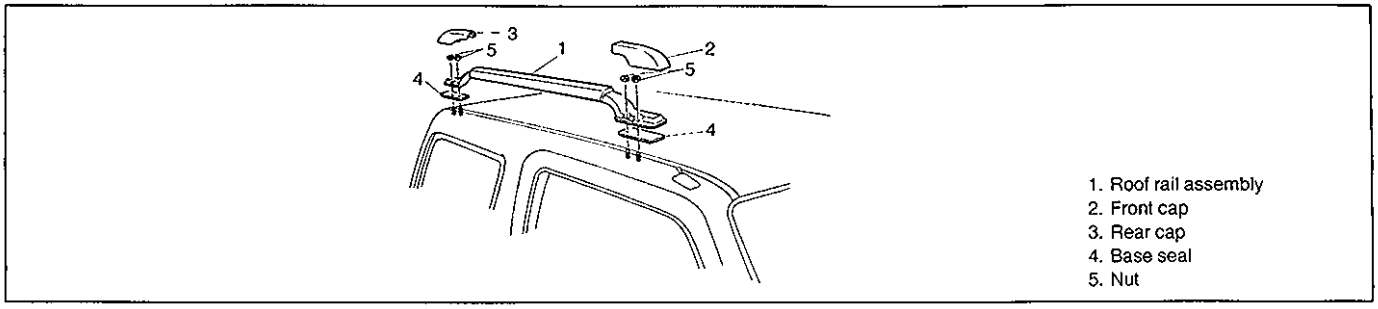

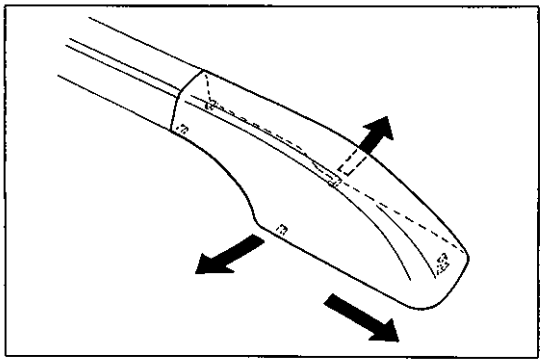

Removal

1) Remove roof rail front and rear caps as shown in figure.
2) Remove nuts.
3) Remove roof rail assembly.

Installation

Reverse removal procedure for installation.

Confirm that each roof rail fixing nut is tightened securely.

SECTION 10

RESTRAINT SYSTEM

WARNING:
For vehicles equipped with Supplemental Restraint (Air Bag) System

- **Service on and around the air bag system components or wiring must be performed only by an authorized SUZUKI dealer. Refer to "Air Bag System Components and Wiring Location View" under "General Description" in air bag system section in order to confirm whether you are performing service on or near the air bag system components or wiring. Please observe all WARNINGS and "Service Precautions" under "On-Vehicle Service" in air bag system section before performing service on or around the air bag system components or wiring. Failure to follow WARNINGS could result in unintentional activation of the system or could render the system inoperative. Either or these two conditions may result in severe injury.**
- **Technical service work must be started at least 90 seconds after the ignition switch is turned to the "LOCK" position and the negative cable is disconnected from the battery. Otherwise, the system may be activated by reserve energy in the Sensing and Diagnostic Module (SDM).**

NOTE:
To determine if the vehicle is equipped with seat belt pretensioner, refer to Owner's Manual.

SEAT BELT SYSTEM ..... SECTION 10A
AIR BAG SYSTEM ..... SECTION 10B

CONTENTS

GENERAL DESCRIPTION 10-1
DIAGNOSIS ..... Refer to "Diagnosis" in each SECTION.

GENERAL DESCRIPTION

There are three types of restraint system used for this vehicle.

	Front seat belt	Rear seat belt	Supplemental restraint system	
TYPE1	Seat belt with ELR	Seat belt with ELR	—	—
TYPE2	Seat belt with ELR	Seat belt with ELR	Driver and front passenger air bag	—
TYPE3	Seat belt with ELR	Seat belt with ELR	Driver and front passenger air bag	Driver and front passenger pretensioner

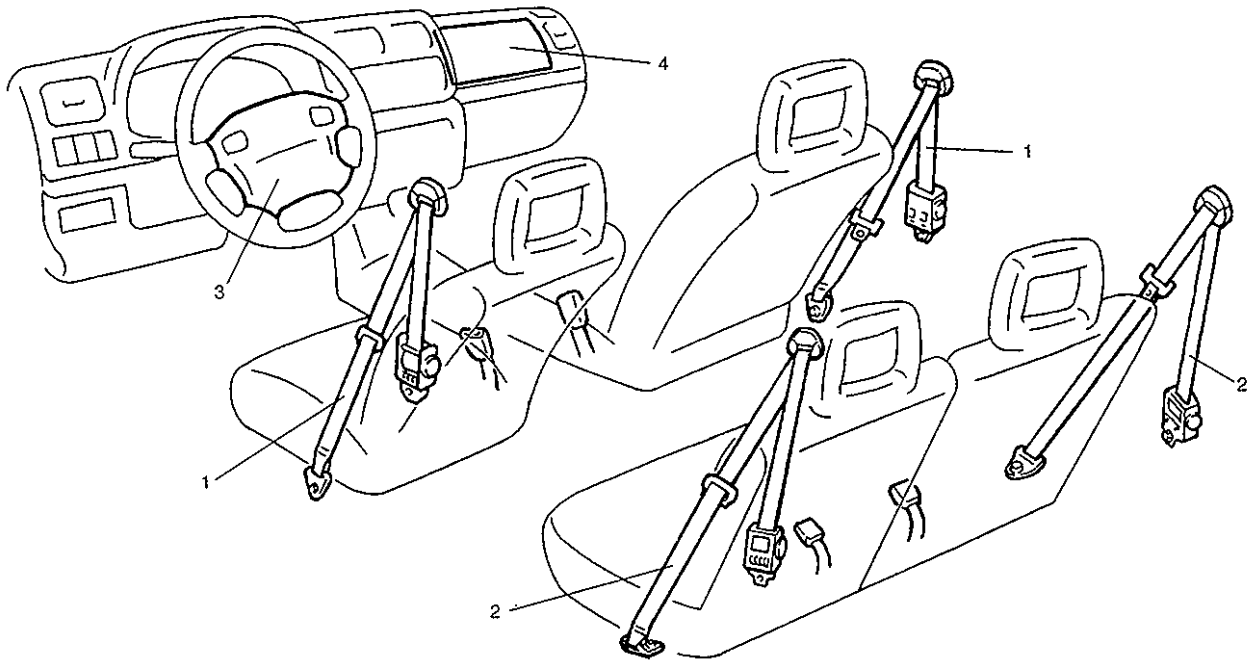

1. Front seat belt
2. Rear seat belt
3. Driver side air bag (if equipped)
4. Passenger air bag (if equipped)

- **Seat belt with ELR**
  The seat belt with emergency locking retractor (ELR) is designed so that it locks immediately (to prevent the webbing from being pulled out of the retractor any further) when any of the following items is detected as exceeding each set value;
  - speed at which the webbing is pulled out of the retractor,
  - acceleration or deceleration of the vehicle speed, and
  - inclination.
- **Seat belt with ELR and pretensioner**
  The seat belt with ELR and a pretensioner has a pretensioner mechanism which operates in linkage with the air bag in addition to the above described ELR. The pretensioner takes up the sag of the seat belt in occurrence of a front collision with an impact larger than a certain set value, thereby enhancing restraint performance.
- **Driver and front passenger side air bags and seat belt pretensioners**
  With the air bag system which includes air bags for both the driver's and passenger's sides as well as the seat belt pretensioners, the pretensioner takes up the sag of the seat belt, the driver air bag (inflator) module is deployed from the center of the steering column and the passenger air bag (inflator) module from the top of the instrument panel in front of the front passenger seat in occurrence of a front collision with an impact larger than a certain set value to supplement protection offered by the driver and front passenger seat belts.
  For more information, refer to SECTION 10B "Air Bag System".

SECTION 10A

SEAT BELT

WARNING:
For vehicles equipped with Supplemental Restraint (Air Bag) System

- **Service on and around the air bag system components or wiring must be performed only by an authorized SUZUKI dealer. Refer to "Air Bag System Components and Wiring Location View" under "General Description" in air bag system section in order to confirm whether you are performing service on or near the air bag system components or wiring. Please observe all WARNINGS and "Service Precautions" under "On-Vehicle Service" in air bag system section before performing service on or around the air bag system components or wiring. Failure to follow WARNINGS could result in unintentional activation of the system or could render the system inoperative. Either or these two conditions may result in severe injury.**
- **Technical service work must be started at least 90 seconds after the ignition switch is turned to the "LOCK" position and the negative cable is disconnected from the battery. Otherwise, the system may be activated by reserve energy in the Sensing and Diagnostic Module (SDM).**
- **The procedures in this section must be followed in the order listed to disable the air bag system temporarily and prevent false diagnostic trouble codes from setting. Failure to follow procedures could result in possible activation of the air bag system, personal injury or otherwise unneeded air bag system repairs.**

CAUTION:
When fasteners are removed, always reinstall them at the same location from which they were removed. If a fastener needs to be replaced, use the correct part number fastener for that application. If the correct part number fastener is not available, a fastener of equal size and strength (or stronger) may be used. Fasteners that are not reused, and those requiring thread-locking compound, will be called out. The correct torque value must be used when installing fasteners that require it. If the above procedures are not followed, parts or system damage could result.

NOTE:
To determine if the vehicle is equipped with seat belt pretensioner, refer to Owner's Manual.

CONTENTS

GENERAL DESCRIPTION 10A-2
Seat Belt 10A-2
Seat Belt Pretensioner (If equipped) 10A-2
DIAGNOSIS 10A-2
Inspection and Repair Required after Accident 10A-2
ON-VEHICLE SERVICE 10A-3
Service Precautions 10A-3
Servicing and Diagnosis 10A-3
Disabling air bag system (for vehicle with air bag system) 10A-3
Enabling air bag system (for vehicle with air bag system) 10A-3
Handling and storage (for seat belt with pretensioner) 10A-3
Disposal (for seat belt with pretensioner) 10A-3
Front Seat Belt without Pretensioner 10A-4
Front Seat Belt with Pretensioner 10A-6
Rear Seat Belt 10A-7
TIGHTENING TORQUE SPECIFICATIONS ... 10A-8

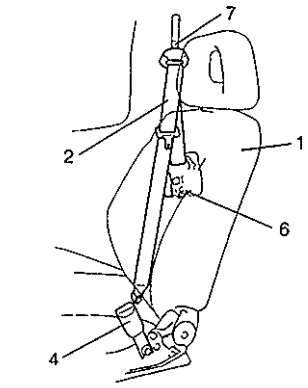

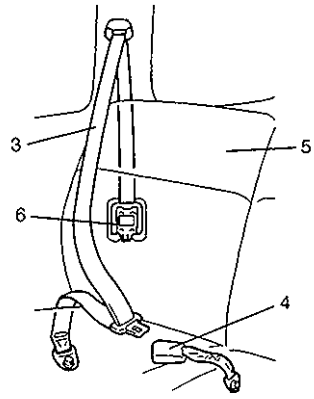

1. Front seat
2. Front seat belt
3. Rear seat belt
4. Buckle
5. Rear seat
6. Retractor assembly
7. Shoulder adjuster

GENERAL DESCRIPTION

SEAT BELT

Refer to SECTION 10.

SEAT BELT PRETENSIONER (IF EQUIPPED)

Some seat belts of the driver and front passenger seats are provided with a pretensioner as an optional function unit. The pretensioner is incorporated in retractor assembly and controlled by SDM as one of air bag system components. It will be activated at the same time as the air bag when an impact at the front of vehicle exceeds the specified value.

When servicing seat belt (retractor assembly) with pretensioner, be sure to observe all WARNINGS and CAUTIONS in this section and "Service Precautions" under "On-Vehicle Service" in SECTION10B.

CAUTION:
Do not reuse the seat belt pretensioner (retractor assembly) that has operated but replace it with a new one as an assembly. For checking procedure of its operation, refer to "Service Precautions" under "On-Vehicle Service" in SECTION 10B.

DIAGNOSIS

For diagnosis of the seat belt pretensioner, refer to SECTION 10B.

INSPECTION AND REPAIR REQUIRED AFTER ACCIDENT

After an accident, whether the seat belt pretensioner has been activated or not, be sure to perform checks, inspections and repairs described on "Repairs and Inspections Required after Accident" under "Diagnosis" in SECTION 10B.

ON-VEHICLE SERVICE

SERVICE PRECAUTIONS

SERVICE AND DIAGNOSIS

WARNING:
If replacing seat belt is necessary, replace buckle and ELR (or webbing) together as a set. This is for the reason of ensuring locking of tongue plate with buckle.
If these parts are replaced individually, such a locking condition may become unreliable. For this reason, SUZUKI will supply only the spare buckle and ELR (or webbing) in a set part.

Before servicing or replacing seat belts, refer to following precautionary items.

- Seat belts should be normal relative to strap retractor and buckle portions.
- Keep sharp edges and damaging objects away from belts.
- Avoid bending or damaging any portion of belt buckle or latch plate.
- Do not bleach or dye belt webbing. (Use only mild soap and lukewarm water to clean it.)
- When installing a seat belt anchor bolt by hand to prevent cross-threading.
- Do not attempt any repairs on retractor mechanisms or retractor covers. Replace defective assemblies with new replacement parts.
- Keep belts dry and clean at all times.
- If there exist any parts in question, replace such parts.
- Replace belts whose webbing is cut or otherwise damaged.
- Do not put anything into trim panel opening which seat belt webbing passes through.

For seat belt with pretensioner

Refer to "Service and Diagnosis" of "Service Precautions" under "On-Vehicle Service" in SECTION 10B.

WARNING:
When performing service on or around air bag system components or air bag system wiring, disable the air bag system. Refer to "Disabling Air Bag System" later in this section.
Failure to follow procedures could result in possible air bag activation, personal injury or unneeded air bag system repairs.

DISABLING AIR BAG SYSTEM (FOR VEHICLE WITH AIR BAG SYSTEM)

Refer to "Disabling Air Bag System" of "Service Precautions" under "On-Vehicle Service" in SECTION 10B.

ENABLING AIR BAG SYSTEM (FOR VEHICLE WITH AIR BAG SYSTEM)

Refer to "Enabling Air Bag System" of "Service Precautions" under "On-Vehicle Service" in SECTION 10B.

HANDLING AND STORAGE (FOR SEAT BELT WITH PRETENSIONER)

Refer to "Handling and Storage" of "Service Precautions" under "On-Vehicle Service" in SECTION 10B.

DISPOSAL (FOR SEAT BELT WITH PRETENSIONER)

Refer to "Disposal" of "Service Precautions" under "On-Vehicle Service" in SECTION 10B.

FRONT SEAT BELT WITHOUT PRETENSIONER

WARNING:
Be sure to read "Service Precautions" before starting to work and observe every precaution during work.

REMOVAL

Refer to the figure below to remove front seat belts.

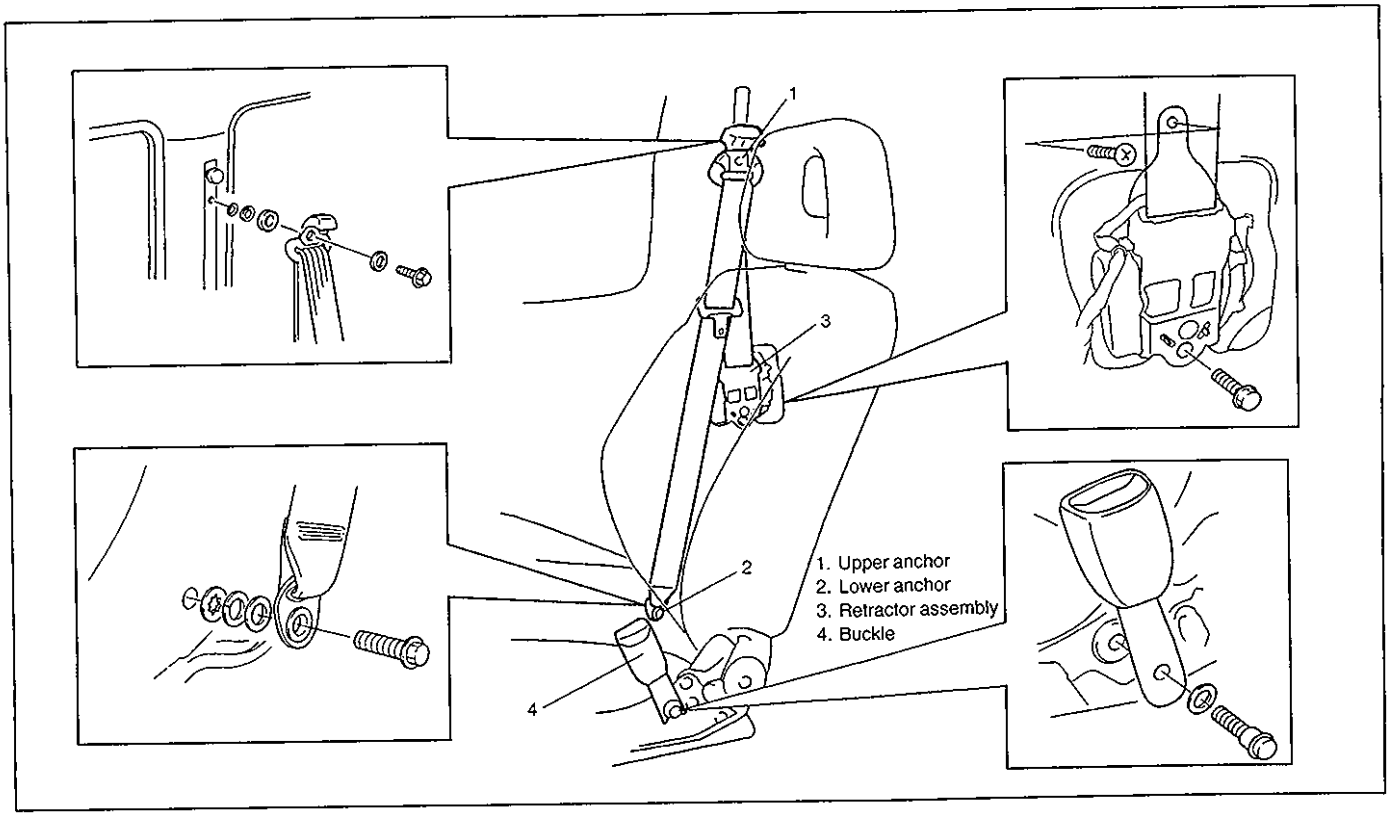

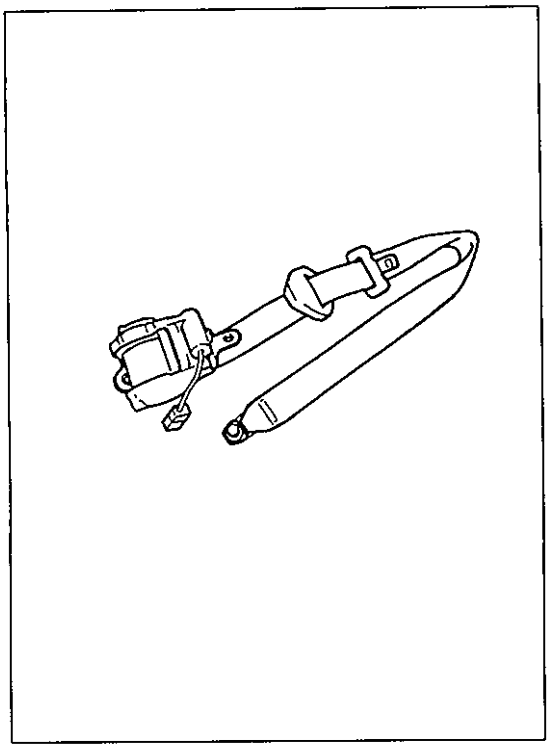

INSPECTION

Seat belts and attaching parts can affect the vital components and systems of a vehicle.
Therefore, they should be inspected carefully and replaced with genuine parts only.

- Seat belt
  Its webbing or strap should be free from damage.
- Retractor assembly
  It should lock webbing when pulled quickly.
  The front seat belt retractor assembly should pass the above inspection and should lock webbing even when tilted (approx. 15°) toward the fore and aft or right and left directions.
- Anchor bolt
  Anchor bolts should be torqued to specification.
- Belt latch
  It should be secure when latched.

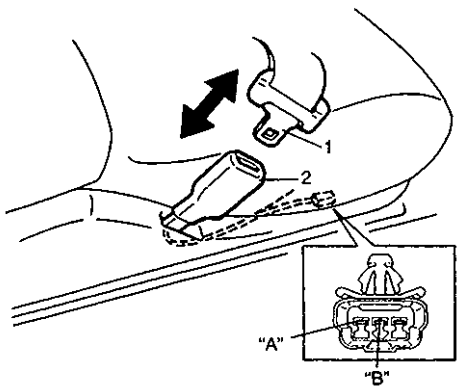

1. Buckle tongue
2. Buckle catch

- Warning system (if equipped)
  Check driver's seat belt strap switch for continuity by ohmmeter.

  Without inserted buckle tongue to buckle catch:
  Terminal "A" and "B" : Continuity
  With inserted buckle tongue to buckle catch:
  Terminal "A" and "B" : No continuity (∞ Ω)

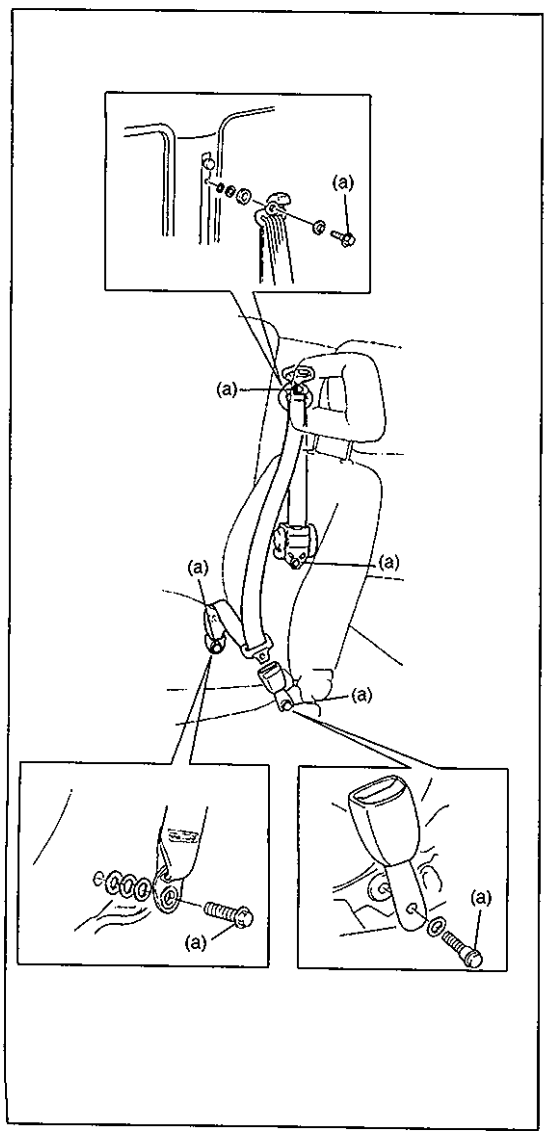

INSTALLATION

Install in reverse order of removal, noting the following.

- Seat belt anchor bolts should have an unified fine thread (7/16–20 UNF). Under no circumstances should any different sized or metric screw threads be used.
- Be sure to tighten seat belt anchor bolts to specified torque.

Tightening Torque
(a): 35 N·m (3.5 kg-m, 25.5 lb-ft)

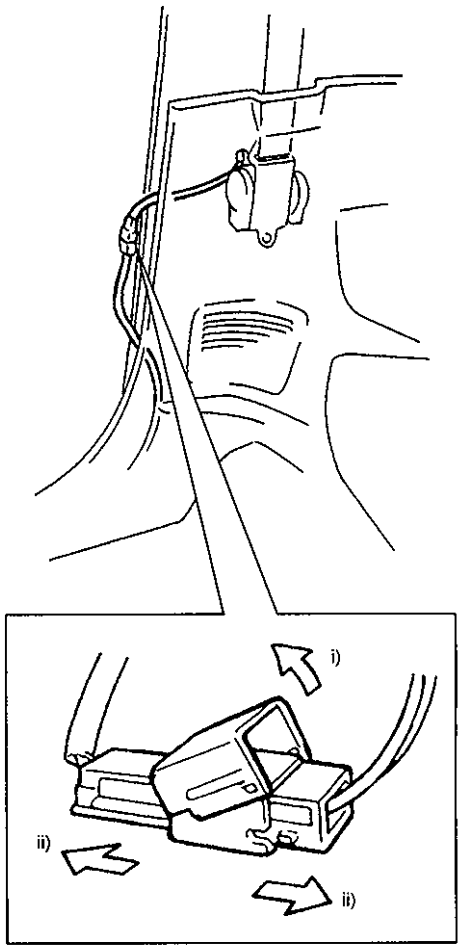

FRONT SEAT BELT WITH PRETENSIONER

WARNING:
- **Never attempt to disassemble or repair the seat belt pretensioner (retractor assembly). If any abnormality is found, be sure to replace it with new one as an assembly.**
- **Be sure to read "Service Precautions" earlier in this section, before starting to work and observe every precaution during work. Neglecting them may result in personal injury or unactivation of the seat belt pretensioner when necessary.**

REMOVAL

1) Disconnect negative battery cable from battery.
2) Disable air bag system. Refer to "Disabling Air Bag System" of "Service Precautions" under "On-Vehicle Service" in SECTION10B.
3) Disconnect Yellow connector for seat belt pretensioner.
   i) Release locking of lock lever
   ii) After unlocked, disconnect to connector
4) Remove front seat belts from the vehicle in the same way as when removing them without pretensioner described on page 10A-4.

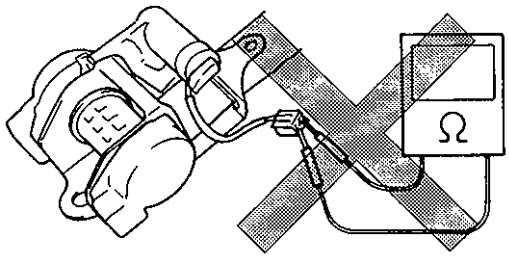

INSPECTION

When checking seat belt with pretensioner, use following check items in addition to those specified for seat belt without pretensioner described in pages 10A-4 and 10A-5.

WARNING:
Never measure resistance of pretensioner or disassemble it. Otherwise, personal injury may result.

CAUTION:
If seat belt pretensioner (retractor assembly) was dropped from a height of 90 cm (3 ft) or more, it should be replaced.

Check retractor assembly with seat belt pretensioner appearance visually for following symptoms and if any one of them is applicable, replace it with a new one as an assembly.

- Pretensioner has activated.
- There is a crack in seat belt pretensioner (retractor assembly).
- Wire harness or connector is damaged.
- Seat belt pretensioner (retractor assembly) is damaged or a strong impact (e.g., dropping) was applied to it.

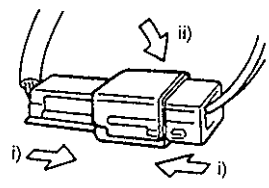

i) Connect connector
ii) Lock connector with lock lever

INSTALLATION

1) Install front seat belts to the vehicle in the same way as when installing them without pretensioner described on page 10A-5.
2) Connect Yellow connector for seat belt pretensioner securely and fit seat belt pretensioner connector onto body.
3) Connect negative battery cable to battery.
4) Enable air bag system. Refer to "Enabling Air Bag System" under "Service Precautions" in SECTION 10B.

REAR SEAT BELT

WARNING:
Be sure to read "Service Precautions" earlier in this section before starting to work and observe every precaution during work.

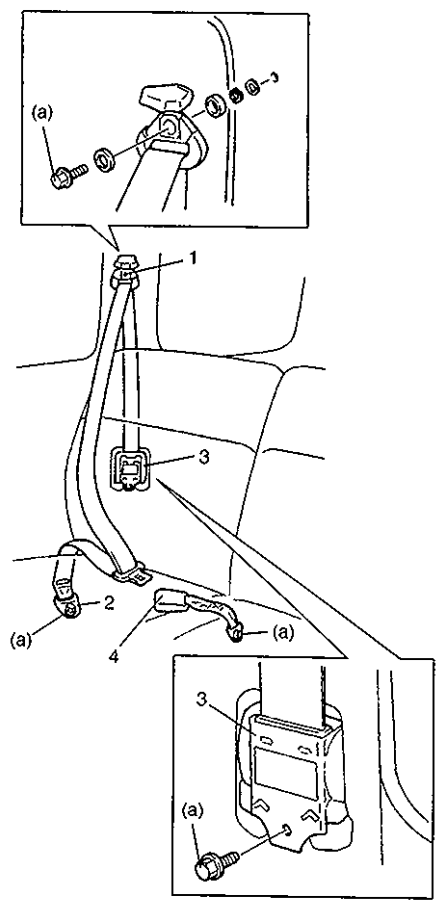

1. Upper anchor
2. Lower anchor
3. Retractor assembly
4. Buckle

REMOVAL

Refer to the figure to remove rear seat belts.

INSPECTION

Check the rear seat belt in the same way as when inspecting front seat belt without pretensioner. (Refer to pages 10A-4 and 10A-5.)

INSTALLATION

Install the rear seat belt observing the same precautions as when installing front seat belt without pretensioner. (Refer to page 10A-5.)

- Be sure to tighten seat belt anchor bolts to specified torque.
  Tightening Torque
  (a): 35 N·m (3.5 kg-m, 25.5 lb-ft)

TIGHTENING TORQUE SPECIFICATIONS

Fastening parts	Tightening torque		
	N·m	kg-m	lb-ft
Upper and lower anchor bolt	35	3.5	25.5
Retractor assembly bolt	35	3.5	25.5
Buckle bolt	35	3.5	25.5

SECTION 10B

AIR BAG SYSTEM

WARNING:

- **Service on or around the air bag system components or wiring must be performed only by an authorized SUZUKI dealer. Please observe all WARNINGS and "Service Precautions" under "On-Vehicle Service" in this section before performing service on or around the air bag system components or wiring. Failure to follow WARNINGS could result in unintended activation of the system or could render the system inoperative. Either of these two conditions may result in severe injury.**
- **The procedures in this section must be followed in the order listed to disable the air bag system temporarily and prevent false diagnostic trouble codes from setting. Failure to follow procedures could result in possible activation of the air bag system, personal injury or otherwise unneeded air bag system repairs.**

CAUTION:

When fasteners are removed, always reinstall them at the same location from which they were removed. If a fastener needs to be replaced, use the correct part number fastener for that application. If the correct part number fastener is not available, a fastener of equal size and strength (or stronger) may be used. Fasteners that are not reused, and those requiring thread-locking compound, will be called out. The correct torque value must be used when installing fasteners that require it. If the above conditions are not followed, parts or system damage could result.

CONTENTS

GENERAL DESCRIPTION 10B- 3
Operation of Air Bag System at Collision 10B- 3
System Components and Wiring Location View and Connectors 10B- 4
System Wiring Diagram 10B- 5
DIAGNOSIS 10B- 6
Diagnostic Trouble Codes 10B- 6
Use of Special Tools 10B- 6
Intermittents and Poor Connections 10B- 8
Air Bag Diagnostic System Check 10B- 9
Diagnostic trouble code (DTC) check ... 10B-11
Diagnostic trouble code (DTC) clearance 10B-11
Diagnostic trouble code table 10B-12
Table A - "AIR BAG" warning lamp comes ON steady 10B-14
Table B - "AIR BAG" warning lamp does not come ON 10B-14
Table C - "AIR BAG" warning lamp flashes 10B-14
Table D - "AIR BAG" warning lamp cannot indicate flashing pattern of DTC 10B-14
DTC 15 - Passenger air bag initiator circuit resistance high 10B-20
DTC 16 - Passenger air bag initiator circuit resistance low 10B-20
DTC 18 - Passenger air bag initiator circuit short to ground 10B-20
DTC 19 - Passenger air bag initiator circuit short to power circuit 10B-20
DTC 21 - Driver air bag initiator circuit resistance high 10B-25
DTC 22 - Driver air bag initiator circuit resistance low 10B-25
DTC 24 - Driver air bag initiator circuit short to ground 10B-25
DTC 25 - Driver air bag initiator circuit short to power circuit 10B-25

DTC 31 - Power source voltage high ... 10B-30
DTC 32 - Power source voltage low 10B-30
DTC 41 - Driver pretensioner initiator circuit resistance high 10B-33
DTC 42 - Driver pretensioner initiator circuit resistance low 10B-33
DTC 43 - Driver pretensioner initiator circuit short to ground 10B-33
DTC 44 - Driver pretensioner initiator circuit short to power circuit 10B-33
DTC 45 - Passenger pretensioner initiator circuit resistance high 10B-33
DTC 46 - Passenger pretensioner initiator circuit resistance low 10B-33
DTC 47 - Passenger pretensioner initiator circuit short to ground 10B-33
DTC 48 - Passenger pretensioner initiator circuit short to power circuit 10B-33
DTC 51 - Frontal crash detected (System activation command outputted) 10B-38
DTC 71 - Internal SDM fault 10B-38
DTC 13 - System specifications different from SDM specifications 10B-38
REPAIRS AND INSPECTIONS REQUIRED AFTER AN ACCIDENT 10B-39
Accident with Deployment/Activation - Component Replacement 10B-39
Accident with or without Deployment /Activation - Component Inspections 10B-39
ON-VEHICLE SERVICE 10B-42
Service Precautions 10B-42
Service and diagnosis 10B-42
Disabling air bag system 10B-43
Enabling air bag system 10B-43
Handling and storage 10B-44
Disposal 10B-48
SDM 10B-49
Passenger Air Bag (Inflator) Module 10B-50
Driver Air Bag (Inflator) Module 10B-51
Contact Coil and Combination Switch Assembly 10B-51
Seat Belt Pretensioner (If Equipped) 10B-51
"AIR BAG" Warning Lamp 10B-51
AIR BAG (INFLATOR) MODULE AND SEAT BELT PRETENSIONER DISPOSAL .. 10B-52
Deployment/Activation Outside Vehicle ... 10B-52
Deployment/Activation Inside Vehicle 10B-59
DEPLOYED AIR BAG (INFLATOR) MODULE AND ACTIVATED SEAT BELT PRETENSIONER DISPOSAL 10B-62
TIGHTENING TORQUE SPECIFICATIONS 10B-63
SPECIAL TOOLS 10B-63

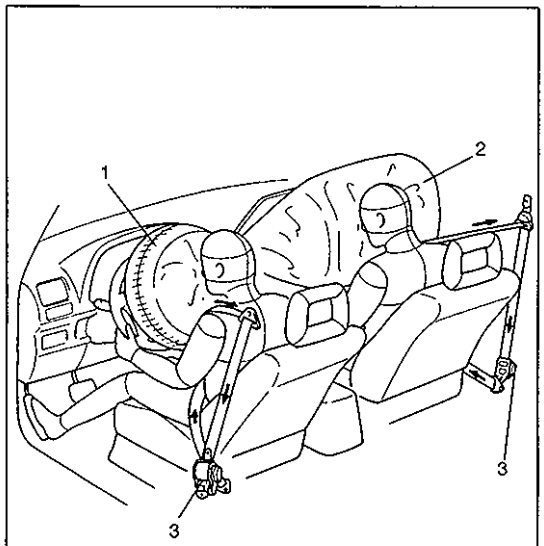

1. Driver side air bag
2. Passenger side air bag
3. Seat belt pretensioner (if equipped)

GENERAL DESCRIPTION

With the air bag system which includes air bags for both the driver's and passenger's sides as well as the seat belt pretensioners (if equipped), the sag of the seat belt is taken up (for seat belt with pretensioner), the driver air bag (inflator) module is deployed from the center of the steering column and the passenger air bag (inflator) module from the top of the instrument panel in front of the front passenger seat in occurrence of a front collision with an impact larger than a certain set value to supplement protection offered by the driver and front passenger seat belts.

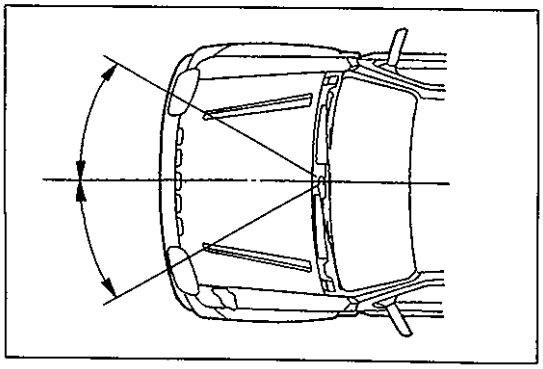

The air bag system is designed to activate only in severe frontal collisions. It is not designed to activate in rear impacts, side impacts, rollovers, or minor frontal collisions, since it would offer no protection in those types of accidents.

OPERATION OF AIR BAG SYSTEM AT COLLISION

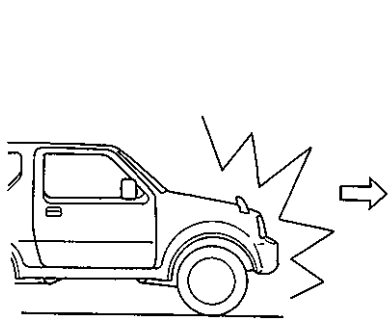

Frontal crash

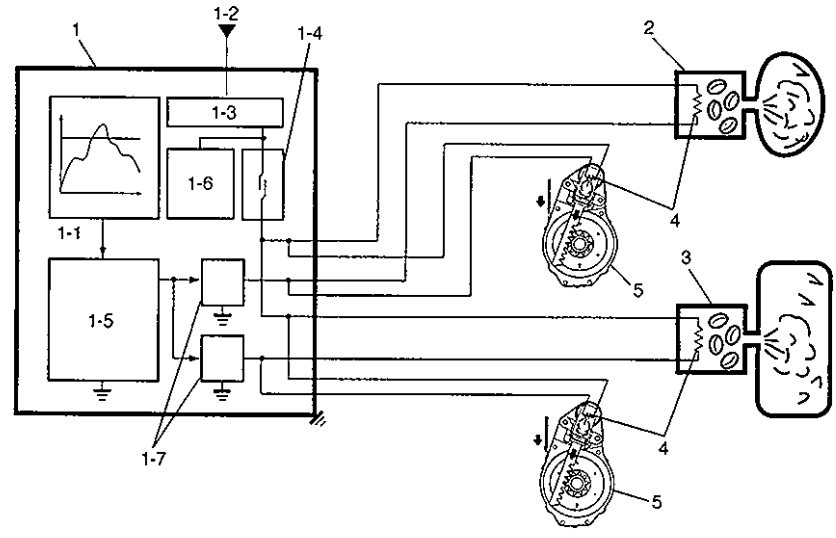

1. SDM
1-1. Sensor
1-2. Power source
1-3. Voltage converter
1-4. Safing sensor
1-5. Micro-controller
1-6. Energy reserve circuit
1-7. Ignition driver circuit
2. Driver air bag
3. Passenger air bag
4. Squib circuit
5. Seat belt pretensioner (if equipped)

SYSTEM COMPONENTS AND WIRING LOCATION VIEW AND CONNECTORS

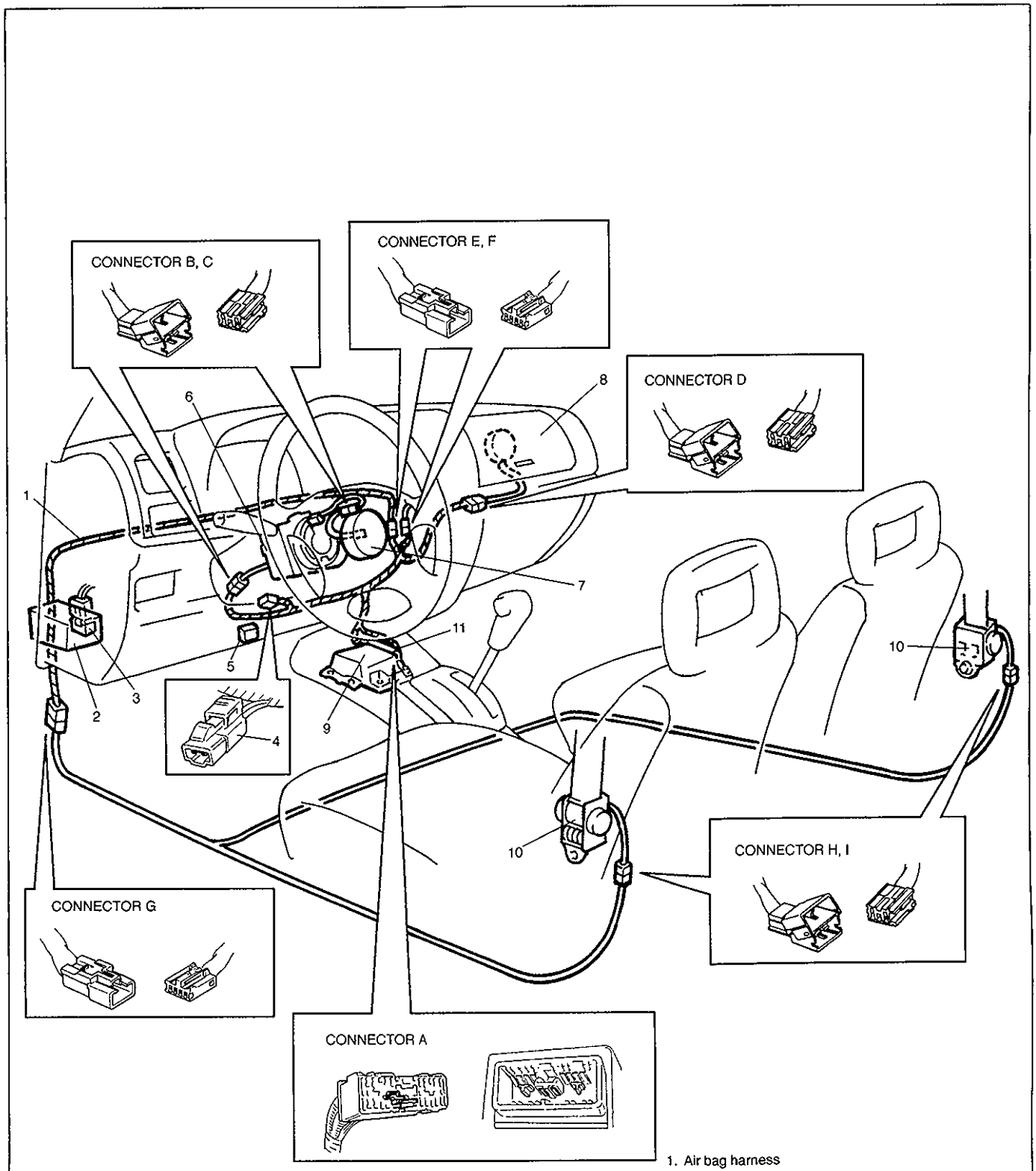

1. Air bag harness
2. J/B
3. "AIR BAG" fuse box
4. "AIR BAG" monitor coupler
5. DLC
6. Contact coil assembly
7. Driver air bag (inflator) module
8. Passenger air bag (inflator) module
9. SDM
10. Seat belt pretensioner (retractor assembly) (if equipped)
11. Ground for air bag system

SYSTEM WIRING DIAGRAM

WIRE HARNESS COLOR

B	: Black	G	: Green	V	: Violet
B/W	: Black/White	Gr	: Gray	Y	: Yellow
B/Bl	: Black/Blue	G/R	: Green/Red	Y/B	: Yellow/Black
Bl	: Blue	Lg	: Lightgreen	Y/R	: Yellow/Red
Bl/R	: Blue/Red	P	: Pink	W	: White
Br	: Brown				

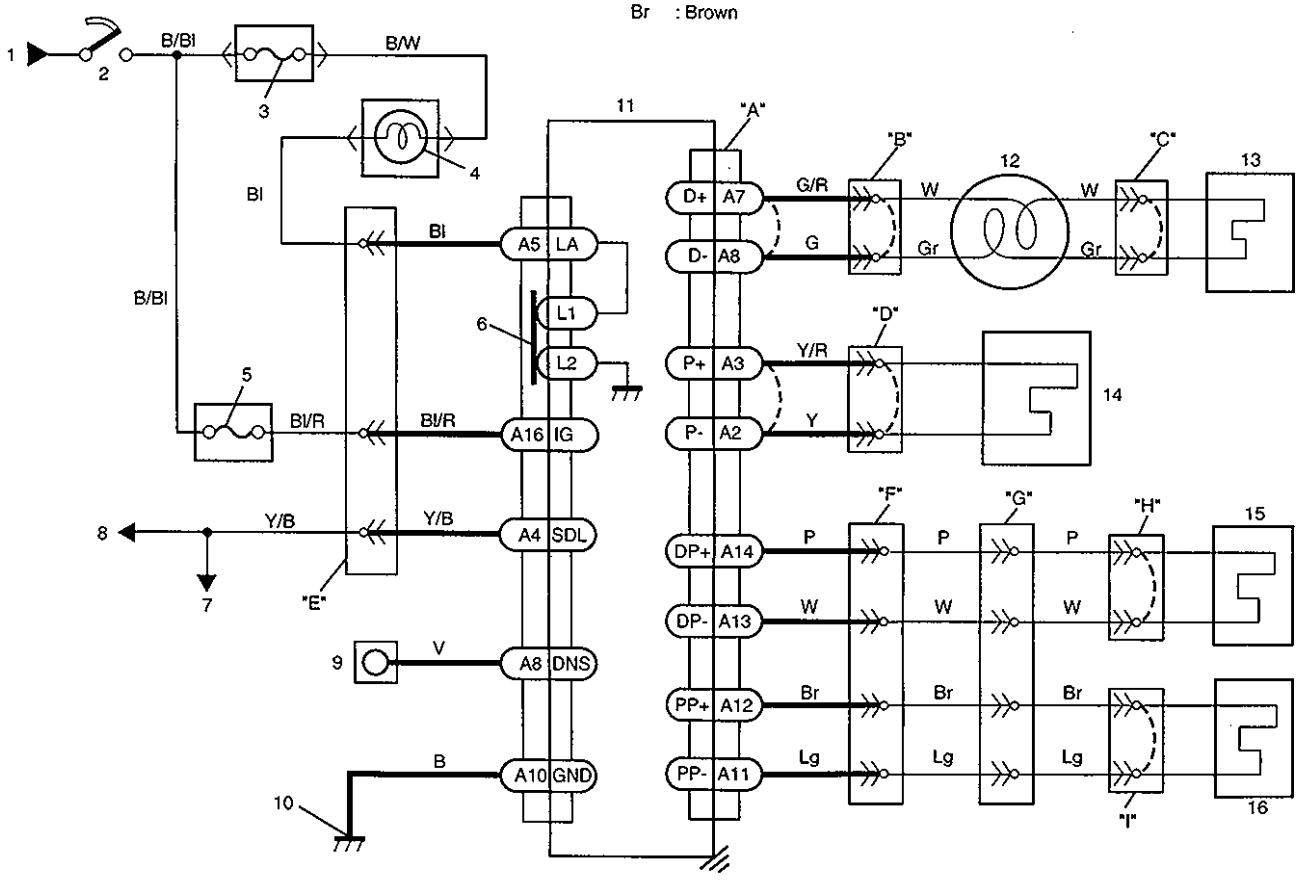

: Shorting bar

: Air bag harness

"A" ~ "I" : Connector

TERMINAL ARRANGEMENT OF SDM (VIEWED FROM HARNESS SIDE)

A8	A7	A6	A5	L1	L2	A4	A3	A2	A1
A16	A15	A14	A13			A12	A11	A10	A9

1. From main fuse
2. Ignition switch
3. "IG·COIL METER" fuse in J/B
4. "AIR BAG" warning lamp in combination meter
5. "AIR BAG" fuse in "AIR BAG" fuse box
6. Connection detection pin
7. To ECM, TCM (if equipped), ICM (if equipped) and ABS controller (if equipped)
8. To data link connector (DLC)
9. "AIR BAG" monitor coupler
10. Ground for air bag system
11. SDM
12. Contact coil assembly
13. Driver air bag (inflator) module
14. Passenger air bag (inflator) module
15. Driver seat belt pretensioner (if equipped)
16. Passenger seat belt pretensioner (if equipped)

CONNECTOR "A" (SDM connector)

TERMINAL	CIRCUIT	
A1	———	
A2	Passenger air bag (inflator) module	Low
A3		High
A4	Data link connector (DLC)	
A5	"AIR BAG" warning lamp	
A6	Driver air bag (inflator) module	Low
A7		High
A8	Diagnosis switch	
A9	———	
A10	Ground	
A11	Passenger pretensioner (if equipped)	Low
A12		High
A13	Driver pretensioner (if equipped)	Low
A14		High
A15	———	
A16	Ignition switch (power source)	

DIAGNOSIS

WARNING:
To avoid deployment when troubleshooting the air bag system, do not use electrical test equipment such as a battery powered or AC powered voltmeter, ohmmeter, etc., or any type of electrical equipment other than that specified in this manual. Do not use a non-powered probe type tester. Instructions in this manual must be followed carefully, otherwise personal injury may result.

DIAGNOSTIC TROUBLE CODES

The "Air Bag Diagnostic System Check" must always be the starting point of any air bag system diagnosis. The "Air Bag Diagnostic System Check" checks for proper "AIR BAG" warning lamp operation and checks for air bag diagnostic trouble codes using on-board diagnosis function.

USE OF SPECIAL TOOLS

WARNING:
To avoid deployment when troubleshooting the air bag system, do not use electrical test equipment such as a battery powered or AC powered voltmeter, ohmmeter, etc., or any type of electrical equipment other than that specified in this manual. Do not use a non-powered probe type tester. Instructions in this manual must be followed carefully, otherwise personal injury may result.

You should be familiar with the tools listed in this section under the heading "Special Tools". You should be able to measure voltage and resistance. You should be familiar with proper use of a scan tool such as Air Bag Driver/ Passenger Load Tool, Connector Test Adapter Kit and the Digital Multimeter.

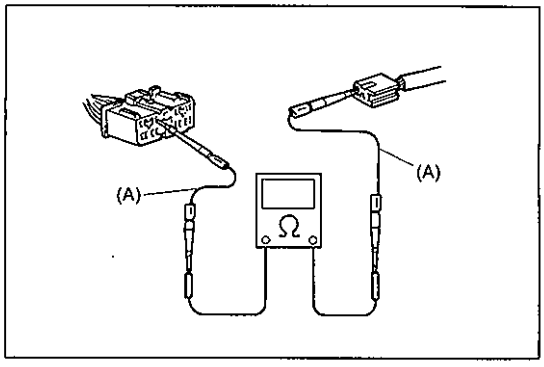

Special Tool (Connector Test Adapter Kit)
(A): 09932-76010

This must be used whenever a diagnostic procedure requests checking or probing a terminal.
Using the appropriate adapter in the special tool will ensure that no damage to the terminal will occur from the multimeter probe, such as spreading or bending.

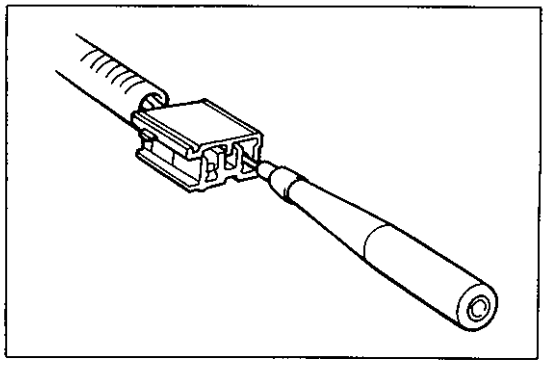

The adapter will also give an idea of whether contact tension is sufficient, helping to find an open or intermittent open due to poor terminal contact.

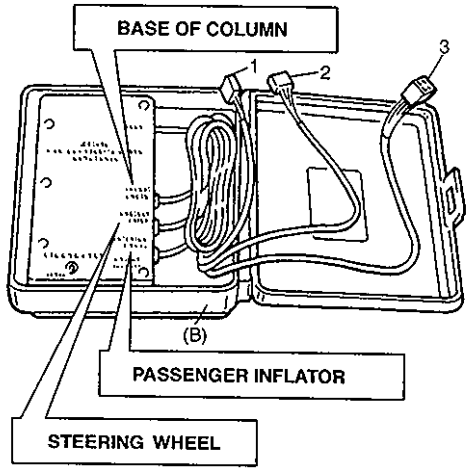

1. Connector for contact coil and driver air bag (inflator) module (Located near the base of the steering column)
2. Connector for driver, passenger air bag (inflator) module and driver and passenger seat belt pretensioners
3. Not used

Special Tool (Air Bag Driver/Passenger Load Tool) (B): 09932-75010

This tool is used only when called for in this section. It is used as a diagnostic aid and safety device to prevent inadvertent air bag (inflator) module deployment and seat belt pretensioner activation. The load tool has three connectors attached to its case which are electrically functional and serve as resistive load substitutions. No more than two connectors are used at any time.

One of connectors ("STEERING WHEEL") is used to substitute the load of followings.

- driver air bag (inflator) module when it is connected at the top of the column to the contact coil assembly.
- passenger air bag (inflator) module when it is connected to the air bag harness connector for passenger air bag (inflator) module.
- driver and passenger seat belt pretensioner when it is connected to air bag harness connector for driver and passenger seat belt pretensioner.

Another connector ("BASE OF COLUMN") is used to substitute the load of the driver air bag (inflator) module and the contact coil assembly when it is connected at the base of the column to the air bag wire harness.
The third connector ("PASSENGER INFLATOR") is not used.

By substituting the resistance of the load tool when called for, a determination can be made as to whether an inflator circuit component is causing system malfunction and which component is causing the malfunction.
The load tool should be used only when specifically called for in the diagnostic procedures.

INTERMITTENTS AND POOR CONNECTIONS

Most intermittents are caused by faulty electrical connections or wiring. When a check for proper connection is requested in a diagnostic flow table, perform careful check of suspect circuits for:

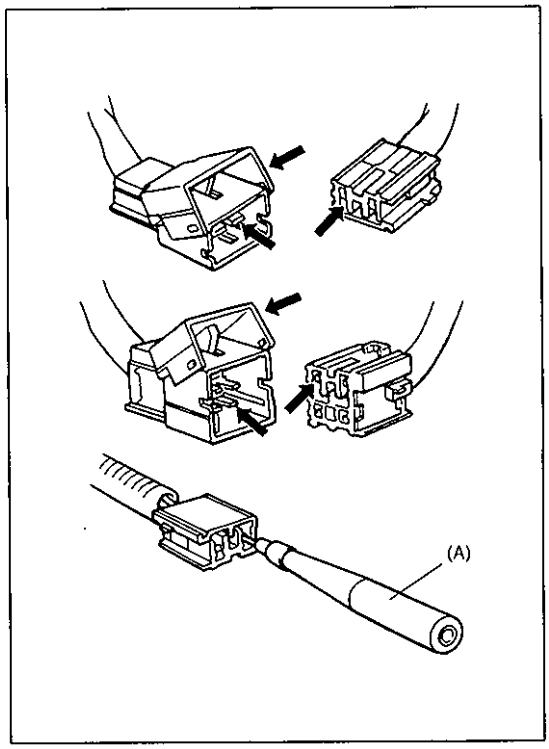

- Poor mating of connector halves, or terminals not fully seated in the connector body (backed out).
- Dirt or corrosion on the terminals. The terminals must be clean and free of any foreign material which could impede proper terminal contact.
  However, cleaning the terminal with a sand paper or the like is prohibited.
- Damaged connector body, exposing the terminals to moisture and dirt, as well as not maintaining proper terminal orientation with the component or mating connector.
- Improperly formed or damaged terminals.
  Check each connector terminal in problem circuits carefully to ensure good contact tension by using the corresponding mating terminal included in the connector test adapter kit (special tool). If contact tension is not enough, reform it to increase contact tension or replace.
  Special Tool (Connector Test Adapter Kit)
  (A): 09932-76010

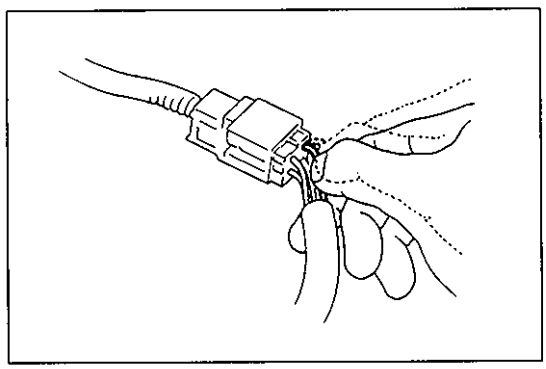

- Poor terminal-to-wire connection.
  Check each wire harness in problem circuits for poor connection by shaking it by hand lightly. If any abnormal condition is found, change the wire harness assembly or component parts with new ones.

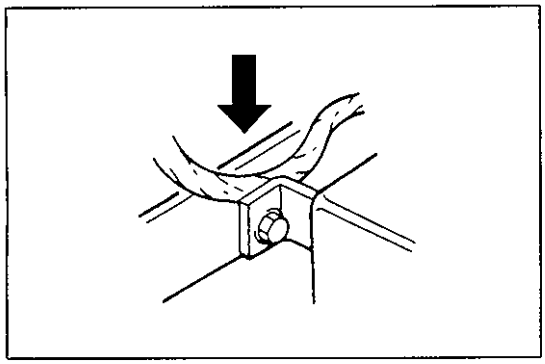

- Wire insulation which is rubbed through, causing an intermittent short as the bare area touches other wiring or parts of the vehicle.
- Wire broken inside the insulation. This condition could cause a continuity check to show a good circuit, but if only 1 or 2 strands of a multi-strand-type wire are intact, resistance could be far too high.

If any abnormality is found, repair or replace as a wire harness assembly.

AIR BAG DIAGNOSTIC SYSTEM CHECK

WARNING:
To avoid deployment when troubleshooting the air bag system, do not use electrical test equipment such as a battery powered or AC powered voltmeter, ohmmeter, etc., or any type of electrical equipment other than that specified in this manual. Do not use a non-powered probe type tester. Instructions in this manual must be followed carefully, otherwise personal injury may result.

CAUTION:
The order in which diagnostic trouble codes are diagnosed is very important. Failure to diagnose the diagnostic trouble codes in the order specified may result in extended diagnostic time, incorrect diagnosis and incorrect parts replacement.

The diagnostic procedures used in this section are designed to find and repair air bag system malfunctions. To get the best results, it is important to use the diagnostic flow tables and follow the sequence listed below.

A. PERFORM THE "AIR BAG DIAGNOSTIC SYSTEM CHECK FLOW TABLE"
The "Air Bag Diagnostic System Check Flow Table" must be the starting point of any air bag system diagnosis. The "Air Bag Diagnostic System Check Flow Table" checks for proper "AIR BAG" warning lamp operation through "AIR BAG" warning lamp and whether air bag diagnostic trouble codes exist.

B. REFER TO THE PROPER DIAGNOSTIC TABLE AS DIRECTED BY THE "AIR BAG DIAGNOSTIC SYSTEM CHECK FLOW TABLE".
The "Air Bag Diagnostic System Check Flow Table" will lead you to the correct table to diagnose any air bag system malfunctions. Bypassing these procedures may result in extended diagnostic time, incorrect diagnosis and incorrect parts replacement.

C. REPEAT THE "AIR BAG DIAGNOSTIC SYSTEM CHECK FLOW TABLE" AFTER ANY REPAIR OR DIAGNOSTIC PROCEDURES HAVE BEEN PERFORMED.
Performing the "Air Bag Diagnostic System Check Flow Table" after all repair or diagnostic procedures will ensure that the repair has been made correctly and that no other malfunctions exist.

FLOW TABLE TEST DESCRIPTION

STEP1: Check that "AIR BAG" warning lamp lights.
STEP2: Check that "AIR BAG" warning lamp lights.
STEP3: Check diagnosis switch circuit.
STEP4: Check that "AIR BAG" warning lamp flashes 6 times after ignition switch is turned ON.
STEP5: Check that history codes are in SDM memory.
STEP6: Check that current code is in SDM memory.

AIR BAG DIAGNOSTIC SYSTEM CHECK FLOW TABLE

STEP	ACTION	YES	NO
1	1) Make sure that battery voltage is about 11V or higher. 2) Note "AIR BAG" warning lamp as ignition switch is tuned ON. 3) Does "AIR BAG" warning lamp come ON when ignition switch is tuned ON?	Go to step 2.	"AIR BAG" warning lamp does not come ON Proceed to "Table B" on p.10B-14 for wiring diagram and description and 10B-16 and 17 for flow table.
2	Does "AIR BAG" warning lamp come ON steady?	"AIR BAG" warning lamp come ON steady Proceed to "Table A" on p.10B-14 for wiring diagram and description and 10B-15 for flow table.	Go to step 3.
3	Does "AIR BAG" warning lamp keep flashing (indicating DTC) when ignition switch is ON?	"AIR BAG" warning lamp flashes Proceed to "Table C" on p.10B-14 for wiring diagram and description and 10B-18 for flow table.	Go to step 4.
4	Does "AIR BAG" warning lamp turn OFF, after flashing 6 times?	Go to step 5.	Go to step 6.
5	1) Check DTC, referring to "Diagnostic Trouble Code (DTC) Check" on p.10B-11. 2) Is DTC 12 indicated? **NOTE:** **When "AIR BAG" warning lamp doesn't indicate flashing pattern of DTC while diagnosis switch terminal on "AIR BAG" monitor coupler is grounded, proceed to "Table D" on page 10B-14 for wiring diagram and description and 10B-19 for flow table.**	Air bag system is in good condition.	**NOTE:** **As execution of the "Diagnostic Trouble Code (DTC) Clearance" will clear all DTCs, be sure to record all DTCs before servicing.** An intermittent trouble has occurred at some place. Check the connector harness, etc. related to the senced DTC (Refer to "Intermittent and Poor Connections" in this section). Then clear DTC (Refer to p.10B-11.) and repeat this table.
6	1) Check DTC, referring to "Diagnostic Trouble Code (DTC) Check" on p.10B-11. 2) Is DTC 12 indicated? **NOTE:** **When "AIR BAG" warning lamp doesn't indicate flashing pattern of DTC while diagnosis switch terminal on "AIR BAG" monitor coupler is grounded, proceed to "Table D" on page 10B-14 for wiring diagram and description and 10B-19 for flow table.**	Substitute a known-good SDM and recheck.	**NOTE:** **As execution of the "Diagnostic Trouble Code (DTC) Clearance" will clear all DTCs, be sure to record all DTCs before servicing.** Check and repair according to Flow Table corresponding to that DTC.

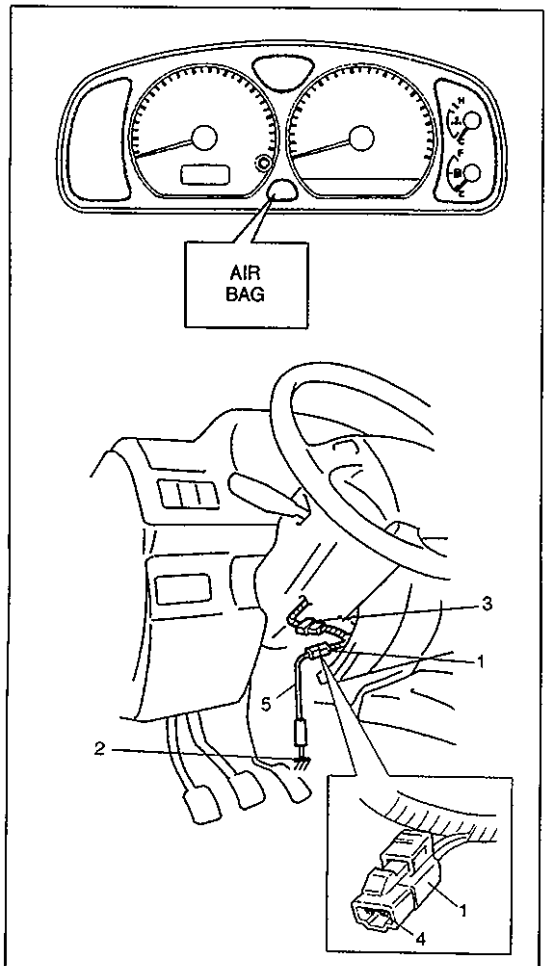

1. "AIR BAG" monitor coupler
2. Body ground
3. Connector for contact coil and combination switch assembly (Yellow connector)
4. Diagnosis switch terminal
5. Service wire

DIAGNOSTIC TROUBLE CODE (DTC) CHECK

1) Check that malfunction indicator lamp ("AIR BAG" warning lamp) comes ON when ignition switch is turned ON.
   If it does not come "ON", proceed to "Table B" on p.10B-14 for wiring diagram and description and 10B-16 and 17 for flow table.
2) Using service wire, ground diagnosis switch terminal in "AIR BAG" monitor coupler.
3) Read DTC from flashing pattern of malfunction indicator lamp ("AIR BAG" warning lamp). (Refer to "Diagnostic Trouble Code Table" on p.10B-12 and 13.)
   If it cannot indicate flashing pattern of DTC,proceed to "Table D" on p.10B-14 for wiring diagram and description and 10B-16 and 17 for flow table.
4) After completing the check, turn ignition switch OFF and disconnect service wire from "AIR BAG" monitor coupler.

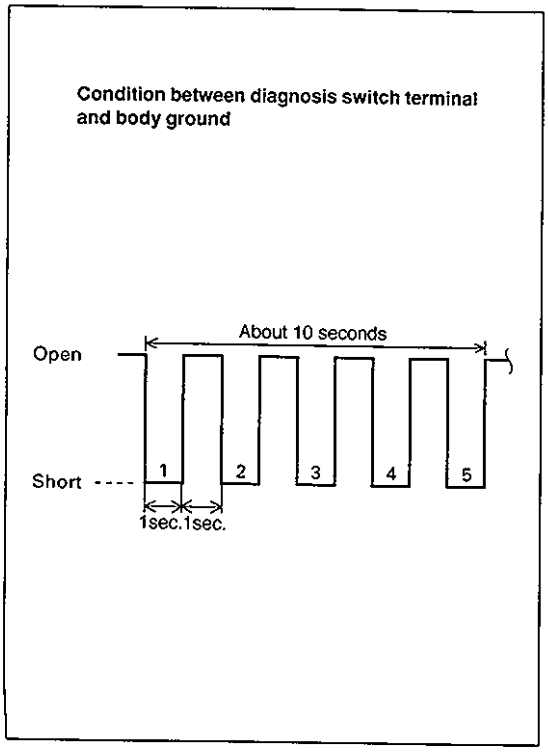

DIAGNOSTIC TROUBLE CODE (DTC) CLEARANCE

1) Turn ignition switch ON and wait about 6 seconds or more.
2) Using service wire, repeat shorting and opening between diagnosis switch terminal on "AIR BAG" monitor coupler and body ground 5 times at about 1 second intervals.
3) Perform "Diagnosis Trouble Code (DTC) Check" on p. 10B-11 and confirm that normal DTC (DTC 12) is displayed and not malfunction DTC.

NOTE:
If DTC 51 or DTC 71 is stored in SDM, it is not possible to clear DTC.

DIAGNOSTIC TROUBLE CODE TABLE (Page 1 of 2)

EXAMPLE: WHEN DRIVER AIR BAG INITIATOR CIRCUIT RESISTANCE HIGH (CODE NO.21) IS SET

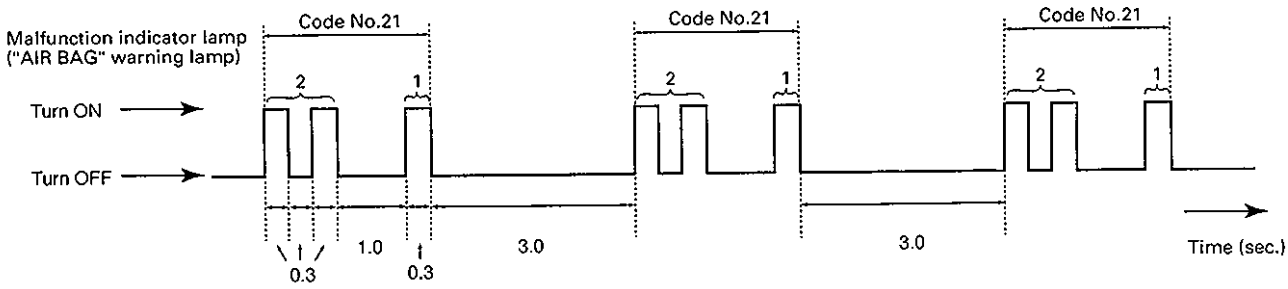

DIAGNOSTIC TROUBLE CODE NO.	DIAGNOSTIC TROUBLE CODE MODE	DIAGNOSIS		
12	⎍⎍	Normal		—
15	⎍⎍⎍⎍	Passenger air bag circuit	Resistance high	Diagnose trouble according to "Diagnostic Flow Table" corresponding to each code No.
16	⎍⎍⎍⎍		Resistance low	
18	⎍⎍⎍⎍⎍⎍		Short to ground	
19	⎍⎍⎍⎍⎍⎍		Short to power circuit	
21	⎍⎍	Driver air bag circuit	Resistance high	
22	⎍⎍		Resistance low	
24	⎍⎍⎍⎍		Short to ground	
25	⎍⎍⎍⎍		Short to power circuit	
31	⎍⎍⎍	Power source voltage	Too high	
32	⎍⎍⎍		Too low	

DIAGNOSTIC TROUBLE CODE TABLE (Page 2 of 2)

DIAGNOSTIC TROUBLE CODE		DIAGNOSIS		
NO.	MODE			
41		Driver pretensioner circuit	Resistance high	Diagnose trouble according to "Diagnostic Flow Table" corresponding to each code No.
42	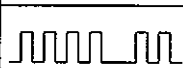		Resistance low	
43			Short to ground	
44			Short to power circuit	
45		Passenger pretensioner circuit	Resistance high	
46	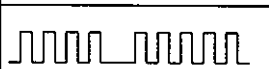		Resistance low	
47			Short to ground	
48	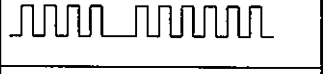		Short to power circuit	
51		SDM	Frontal crash detected	
71			Internal fault	
13	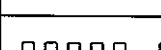		Specifications different between air bag system and SDM	

NOTE:

- **When 2 or more codes are indicated, the lowest numbered code will appear first.**
- **If a code not listed on the table is displayed, then the SDM is faulty.**

TABLE A – "AIR BAG" WARNING LAMP COMES ON STEADY
TABLE B – "AIR BAG" WARNING LAMP DOES NOT COME ON
TABLE C – "AIR BAG" WARNING LAMP FLASHES
TABLE D – "AIR BAG" WARNING LAMP CANNOT INDICATE FLASHING PATTERN OF DTC

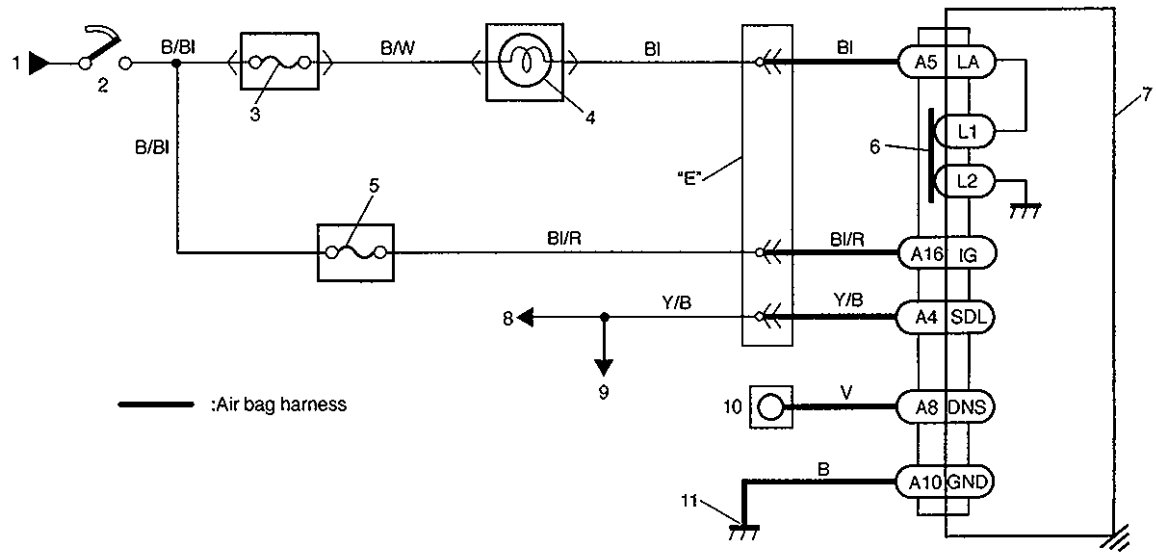

1. From main fuse
2. Ignition switch
3. "IG•COIL METER" fuse in J/B
4. "AIR BAG" warning lamp in combination meter
5. "AIR BAG" fuse in "AIR BAG" fuse box
6. Connection detection pin
7. SDM
8. To DLC
9. To ECM, TCM (if equipped), ICM (if equipped) and ABS controller (if equipped)
10. "AIR BAG" monitor coupler
11. Ground for air bag system

CAUTION:

- **Be sure to perform "AIR BAG Diagnostic System Check" described on page 10B-9 before starting diagnosis according to flow table.**
- **When measurement of resistance or voltage is required in this table, use a tester along with a correct terminal adapter from special tool (Connector test adaptor kit).**
- **When a check for proper connection is required, refer to "Intermittent And Poor Connections" in this section.**
- **If there is open circuit in the air bag wire harness, connector or terminal is found damaged, replace the wire harness, connector and terminal as an assembly.**

TABLE TEST DESCRIPTION:

Table A:

STEP1: Check "AIR BAG" fuse.
STEP2: Check power source circuit.
STEP3: Check "AIR BAG" warning lamp circuit.

Table B:

STEP1: Check combination meter power feed circuit.
STEP2: Check electrical connection check mechanism in SDM connector.
STEP3: Check "AIR BAG" warning lamp circuit.
STEP4: Check open in "AIR BAG" warning lamp circuit.
STEP5: Check short from "AIR BAG" warning lamp circuit to power circuit.
STEP6: Check "AIR BAG" bulb.

Table C and D:

STEP1: Check "AIR BAG" monitor coupler.
STEP2: Check diagnosis switch circuit for air bag system.

DIAGNOSTIC FLOW TABLE

Table A:

STEP	ACTION	YES	NO
1	1) Ignition switch "OFF". 2) Remove and inspect "AIR BAG" fuse. 3) Is fuse good?	Go to step 2.	"BI/R" wire short to ground. After repair, replace "AIR BAG" fuse.
2	1) Disconnect SDM. 2) Check proper connection to SDM at terminal "A16". 3) If OK then check voltage between "A16" terminal of SDM connector and body ground with ignition switch ON. 4) Is it 8 V or more?	Go to step 3.	"BI/R" wire (between "AIR BAG" fuse and SDM connector) open "B/BI" wire (between ignition switch and "AIR BAG" fuse) open or short to ground
3	1) Disconnect 16p connector from combination meter, referring to SECTION 8. 2) Check resistance between "A5" terminal of SDM connector and body ground. 3) Is resistance 10 Ω or more?	Substitute a known-good SDM and recheck.	"BI"wire (between combination meter and SDM connector) short to ground

Fig. for STEP 2

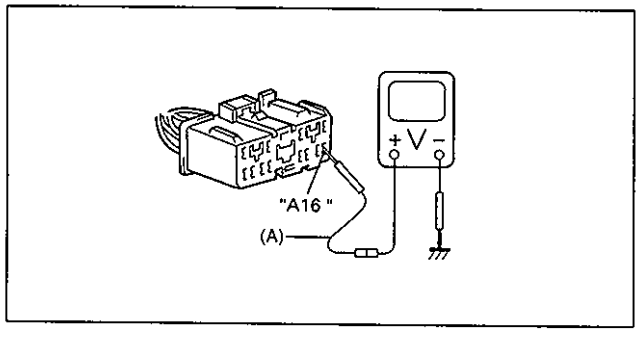

Fig. for STEP 3

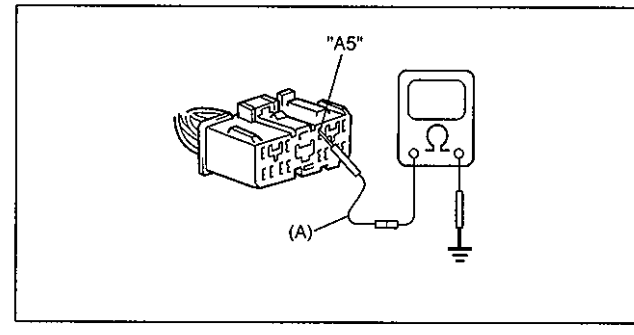

Special Tool
(A): 09932-76010

NOTE:
Upon completion of inspection and repair work, perform following items.
1) Reconnect all air bag system components, ensure all components are properly mounted.
2) Repeat "Air Bag Diagnostic System Check", referring to p.10B-9 and 10 to confirm that the trouble has been corrected.

Table B:

STEP	ACTION	YES	NO
1	1) Set parking brake. 2) Note combination meter when ignition switch is turned ON. 3) Does the "BRAKE" indicator (warning lamp) come ON?	Go to step 2.	"B/W" wire, "IG • COIL METER" fuse or J/B (between ignition switch and combination cluster) open or short to ground
2	1) With ignition switch OFF, disconnect SDM. 2) Check electrical connection check mechanism. 3) Is it in good condition?	Go to step 3.	Repair electrical connection check mechanism.
3	1) Disconnect SDM. 2) Check proper connection to SDM at terminal "A5". 3) If OK then check voltage from "A5" terminal of SDM connector to body ground with ignition switch ON. 4) Is it 8 V or more?	Substitute a known-good SDM and recheck.	Go to step 4.
4	1) Remove combination meter, referring to SECTION 8. 2) Check proper connection to combination meter at terminal for "AIR BAG" warning lamp and to SDM at terminal "A5". 3) If OK then check resistance between "BI" wire terminal of combination meter connector (16p) and "A5" terminal of SDM connector. 4) Is resistance 1 Ω or less?	Go to step 5.	Repair high resistance or open in "BI" wire circuit (between combination meter and SDM).
5	1) Measure voltage from "A5" terminal of SDM connector to body ground with ignition switch ON. 2) Is it 8 V or more?	Repair short from "BI" wire circuit (between combination meter and SDM) to power circuit.	Go to step 6.
6	1) Remove and inspect "AIR BAG" bulb. 2) Is bulb good?	Substitute a known-good combination meter and recheck.	Replace bulb.

Fig. for STEP 2

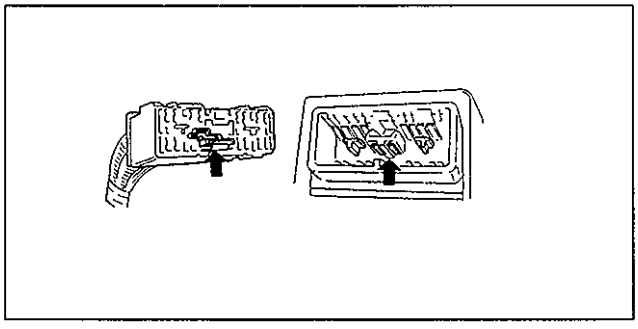

Fig. for STEP 3

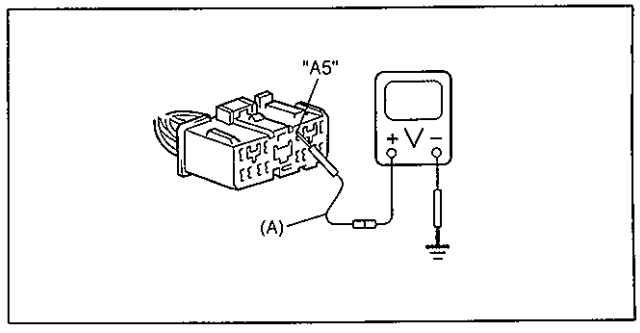

Special Tool
(A): 09932-76010

Fig. for STEP 4

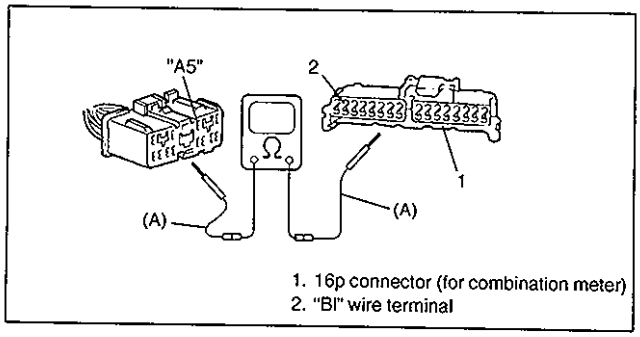

1. 16p connector (for combination meter)
2. "BI" wire terminal

Special Tool
(A): 09932-76010

NOTE:
Upon completion of inspection and repair work, perform following items.
1) **Reconnect all air bag system components, ensure all components are properly mounted.**
2) **Repeat "Air Bag Diagnostic System Check", referring to p.10B-9 and 10 to confirm that the trouble has been corrected.**

Table C:

STEP	ACTION	YES	NO
1	1) Check "AIR BAG" monitor coupler. 2) Is it connected diagnosis switch terminal and ground terminal in "AIR BAG" monitor coupler by service wire?	Go to step 2.	Remove service wire.
2	1) With ignition switch OFF, disconnect SDM. 2) Measure resistance between "A8" terminal of SDM connector and body ground. 3) Is resistance 10 Ω or more?	Substitute a known-good SDM and recheck.	Repair short from "V" wire circuit to ground.

Fig. for STEP 2

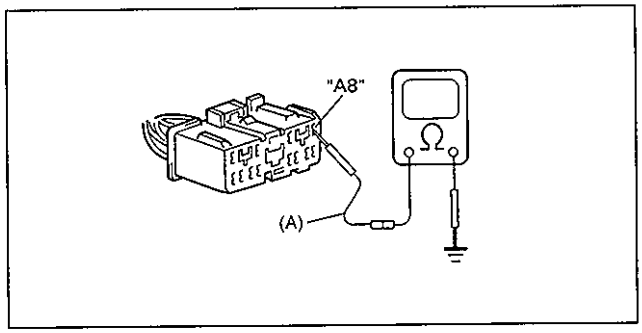

Special Tool
(A): 09932-76010

NOTE:
Upon completion of inspection and repair work, perform following items.
1) Reconnect all air bag system components, ensure all components are properly mounted.
2) Repeat "Air Bag Diagnostic System Check", referring to p.10B-9 and 10 to confirm that the trouble has been corrected.

Table D:

STEP	ACTION	YES	NO
1	1) Inspect connection between diagnostic switch terminal on "AIR BAG" monitor coupler and body ground by service wire. 2) Is it securely connected between then by service wire?	Go to step 2.	Properly connection diagnostic switch terminal on "AIR BAG" monitor coupler and body ground by service wire.
2	1) Disconnect SDM connector from SDM. 2) Check for proper connection at "V" wire ("A8" terminal of SDM connector and terminal on "AIR BAG" monitor coupler) terminals. 3) If OK then measure resistance between "V" wire circuit terminals. 4) Is resistance 1 Ω or more?	1) Check "V" wire terminals. 2) If OK then "V" wire circuit high resistance or open.	Substitute a known good SDM and recheck

Fig. for STEP 2

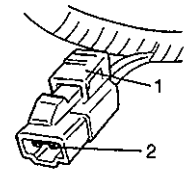

1. "AIR BAG" monitor coupler
2. "V" wire terminal

NOTE:
Upon completion of inspection and repair work, perform following items.
1) Reconnect all air bag system components, ensure all components are properly mounted.
2) Repeat "Air Bag Diagnostic System Check", referring to p.10B-9 and 10 to confirm that the trouble has been corrected.

DTC 15 – PASSENGER AIR BAG INITIATOR CIRCUIT RESISTANCE HIGH
DTC 16 – PASSENGER AIR BAG INITIATOR CIRCUIT RESISTANCE LOW
DTC 18 – PASSENGER AIR BAG INITIATOR CIRCUIT SHORT TO GROUND
DTC 19 – PASSENGER AIR BAG INITIATOR CIRCUIT SHORT TO POWER CIRCUIT

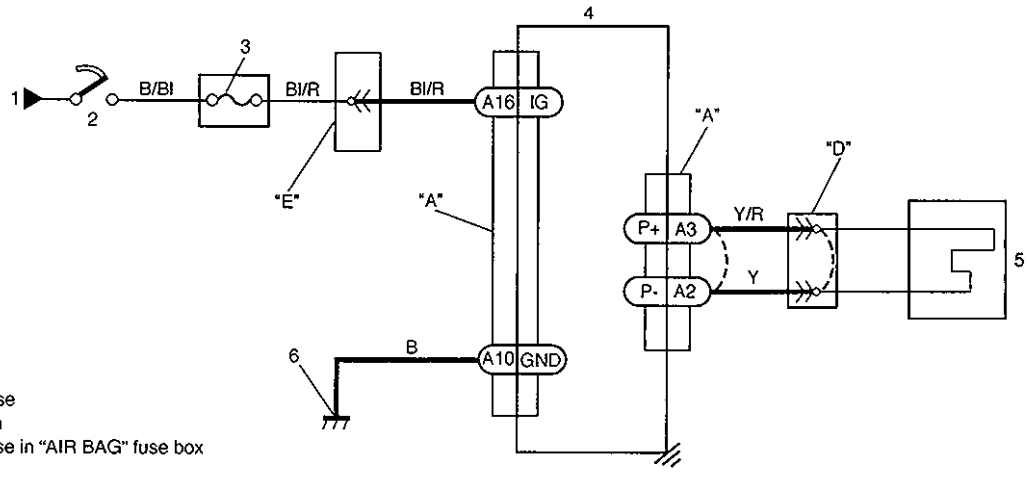

1. From main fuse
2. Ignition switch
3. "AIR BAG" fuse in "AIR BAG" fuse box
4. SDM
5. Passenger air bag (inflator) module
6. Ground for air bag system

: Shorting bar

: Air bag harness

CAUTION:

- **Be sure to perform "Air Bag Diagnostic System Check" described on page 10B-9 before starting diagnosis according to flow table.**
- **When measurement of resistance or voltage is required in this table, use a tester along with a correct terminal adaptor from special tool (Connector test adapter kit).**
- **When a check for proper connection is required, refer to "Intermittent And Poor Connections" in this section.**
- **If there is open circuit in the air bag wire harness, connector or terminal is found damaged, replace the wire harness, connector and terminal as an assembly.**

DTC WILL SET WHEN:

DTC 15: The combined resistance of the passenger air bag (inflator) module, harness wiring and connector terminal contact is above a specified value for specified time.

DTC 16: The combined resistance of the passenger air bag (inflator) module, harness wiring and connector terminal contact is below a specified value for specified time.

DTC 18: The voltage measured at passenger air bag initiator circuit is below a specified value for specified time.

DTC 19: The voltage measured at passenger air bag initiator circuit is above a specified value for specified time.

TABLE TEST DESCRIPTION:

DTC 15, 16, 18 and 19:

STEP 1: Check whether malfunction is in passenger air bag (inflator) module.

STEP 2: Check passenger air bag (inflator) module initiator circuit in air bag harness.

DIAGNOSTIC FLOW TABLE
DTC 15:

STEP	ACTION	YES	NO
1	1) With ignition switch OFF, disconnect passenger air bag (inflator) module connector behind the glove box. 2) Check proper connection to passenger air bag (inflator) module at terminals in "D" connector. 3) If OK then connect Special Tool (B) to passenger air bag (inflator) module connector disconnected at the step 1. 4) With ignition switch ON, is DTC 15 current?	Go to step 2.	1) Ignition switch OFF. 2) Replace passenger air bag (inflator) module.
2	1) With ignition switch OFF, disconnect SDM. 2) Check proper connection to SDM at terminals "A2" and "A3". 3) Release shorting bar in SDM connector by inserting a piece of paper, referring to the figure below. 4) If OK then measure resistance between "A2" and "A3" terminals with connected Special Tool (B). 5) Is resistance 4.5 Ω or less?	Substitute a known-good SDM and recheck.	Repair high resistance or open in "Y" or "Y/R" wire circuit.

Fig. for STEP 1 and 2

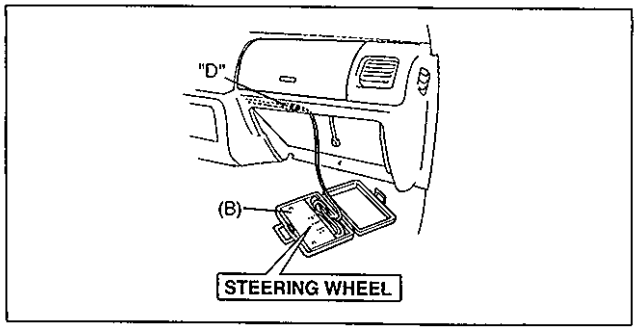

Fig. for STEP 2

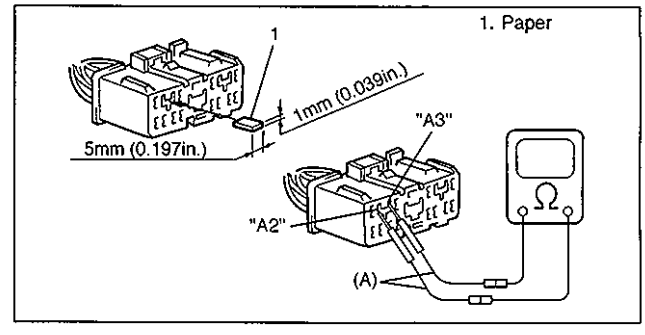

Special Tool
(A): 09932-76010
(B): 09932-75010

NOTE:
Upon completion of inspection and repair work, perform following items.
1) Reconnect all air bag system components, ensure all components are properly mounted.
2) Clear diagnostic trouble codes (Refer to "Diagnostic Trouble Code (DTC) Clearance"), if any.
3) Repeat "Air Bag Diagnostic System Check", referring to p.10B-9 and 10 to confirm that the trouble has been corrected.

DTC 16:

STEP	ACTION	YES	NO
1	1) With ignition switch OFF, disconnect passenger air bag (inflator) module connector behind the glove box. 2) Check proper connection to passenger air bag (inflator) module at terminals in "D" connector. 3) If OK then connect Special Tool (B) to passenger air bag (inflator) module connector disconnected at the step 1. 4) With ignition switch ON, is DTC 16 current?	Go to step 2.	1) Ignition switch OFF. 2) Replace passenger air bag (inflator) module.
2	1) With ignition switch OFF, disconnect SDM. 2) Check proper connection to SDM at terminals "A2" and "A3". 3) Release shorting bar in SDM connector by inserting a piece of paper, referring to the figure below. 4) If OK then measure resistance between "A2" and "A3" terminals with connected Special Tool (B). 5) Is resistance 1.4 Ω or more?	Substitute a known-good SDM and recheck.	Repair short from "Y" wire circuit to "Y/R" wire circuit or from "Y" or "Y/R" wire circuit to other wire circuit.

Fig. for STEP 1 and 2

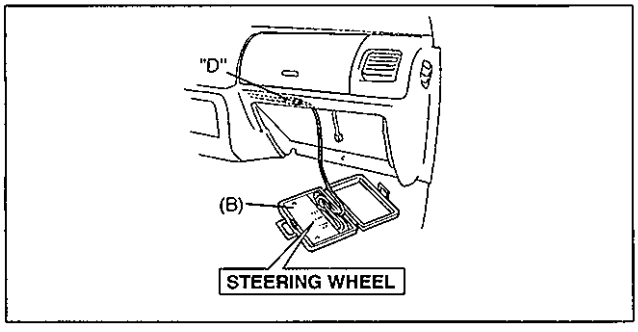

Fig. for STEP 2

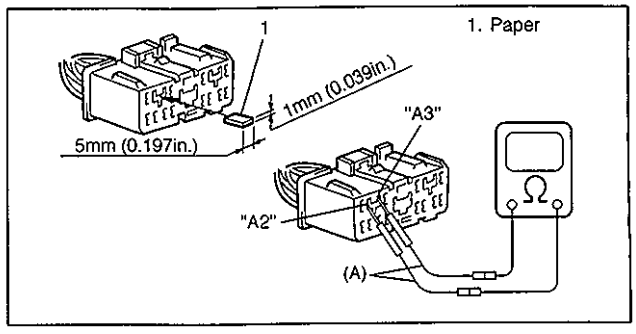

Special Tool
(A): 09932-76010
(B): 09932-75010

NOTE:
Upon completion of inspection and repair work, perform following items.
1) Reconnect all air bag system components, ensure all components are properly mounted.
2) Clear diagnostic trouble codes (Refer to "Diagnostic Trouble Code (DTC) Clearance"), if any.
3) Repeat "Air Bag Diagnostic System Check", referring to p.10B-9 and 10 to confirm that the trouble has been corrected.

DTC 18:

STEP	ACTION	YES	NO
1	1) With ignition switch OFF, disconnect passenger air bag (inflator) module connector behind the glove box. 2) Check proper connection to passenger air bag (inflator) module at terminals in "D" connector. 3) If OK then connect Special Tool (B) to passenger air bag (inflator) module connector disconnected at the step 1. 4) With ignition switch ON, is DTC 18 current?	Go to step 2.	1) Ignition switch OFF. 2) Replace passenger air bag (inflator) module.
2	1) With ignition switch OFF, disconnect Special Tool (B) and SDM. 2) Measure resistance between "A2" and "A10" terminals. 3) Is resistance 10 Ω or more?	Substitute a known-good SDM and recheck.	Repair short from "Y" or "Y/R" wire circuit to ground.

Fig. for STEP 1 and 2

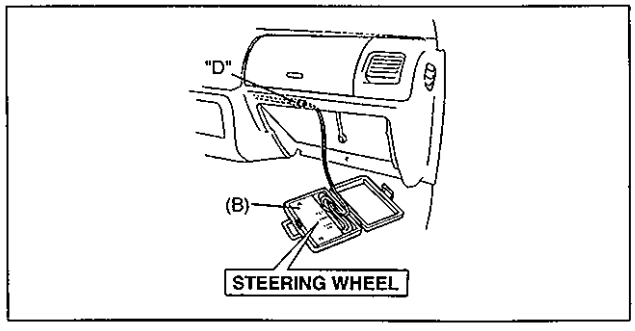

Fig. for STEP 2

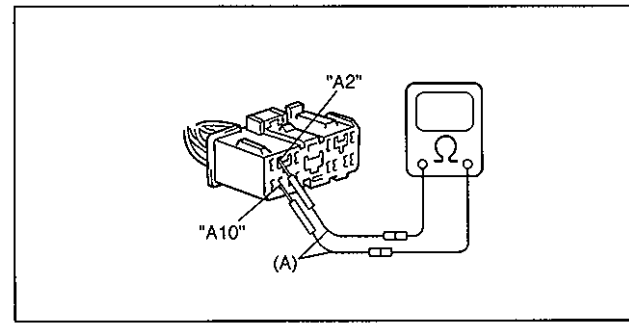

Special Tool
(A): 09932-76010
(B): 09932-75010

NOTE:
Upon completion of inspection and repair work, perform following items.
1) Reconnect all air bag system components, ensure all components are properly mounted.
2) Clear diagnostic trouble codes (Refer to "Diagnostic Trouble Code (DTC) Clearance"), if any.
3) Repeat "Air Bag Diagnostic System Check", referring to p.10B-9 and 10 to confirm that the trouble has been corrected.

DTC 19:

STEP	ACTION	YES	NO
1	1) With ignition switch OFF, disconnect passenger air bag (inflator) module connector behind the glove box. 2) Check proper connection to passenger air bag (inflator) module at terminals in "D" connector. 3) If OK then connect Special Tool (B) to passenger air bag (inflator) module connector disconnected at the step 1. 4) With ignition switch ON, is DTC 19 current?	Go to step 2.	1) Ignition switch OFF. 2) Replace passenger air bag (inflator) module.
2	1) With ignition switch OFF, disconnect Special Tool (B) and SDM. 2) Measure voltage from "A3" terminal to body ground. 3) With ignition switch ON, is voltage 1 V or less?	Substitute a known-good SDM and recheck.	Repair short from "Y" or "Y/R" wire circuit to power circuit.

Fig. for STEP 1 and 2

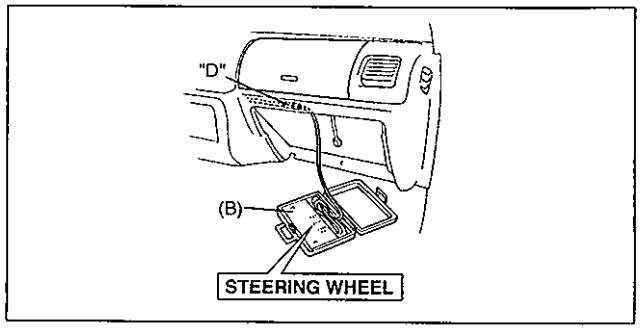

Fig. for STEP 2

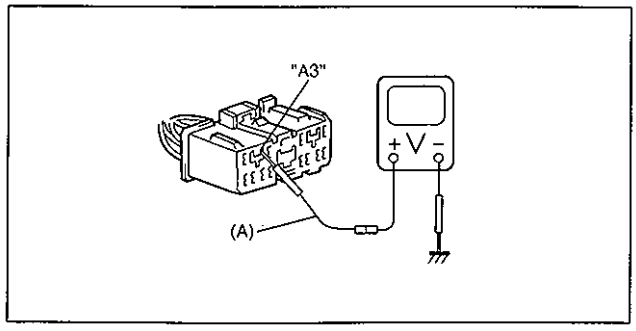

Special Tool
(A): 09932-76010
(B): 09932-75010

NOTE:
Upon completion of inspection and repair work, perform following items.
1) Reconnect all air bag system components, ensure all components are properly mounted.
2) Clear diagnostic trouble codes (Refer to "Diagnostic Trouble Code (DTC) Clearance"), if any.
3) Repeat "Air Bag Diagnostic System Check", referring to p.10B-9 and 10 to confirm that the trouble has been corrected.

DTC 21 – DRIVER AIR BAG INITIATOR CIRCUIT RESISTANCE HIGH
DTC 22 – DRIVER AIR BAG INITIATOR CIRCUIT RESISTANCE LOW
DTC 24 – DRIVER AIR BAG INITIATOR CIRCUIT SHORT TO GROUND
DTC 25 – DRIVER AIR BAG INITIATOR CIRCUIT SHORT TO POWER CIRCUIT

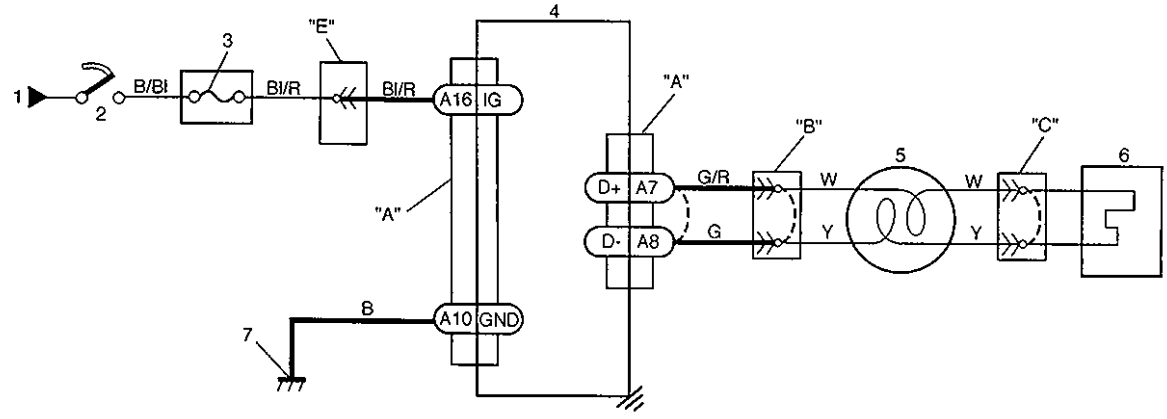

1. From main fuse
2. Ignition switch
3. "AIR BAG" fuse in "AIR BAG" fuse box
4. SDM
5. Contact coil assembly
6. Driver air bag (inflator) module
7. Ground for air bag system

CAUTION:

- **Be sure to perform "Air Bag Diagnostic System Check" described on page 10B-9 before starting diagnosis according to flow table.**
- **When measurement of resistance or voltage is required in this table, use a tester along with a correct terminal adapter from special tool (Connector test adapter kit).**
- **When a check for proper connection is required, refer to "Intermittent And Poor Connections" in this section.**
- **If there is open circuit in the air bag wire harness, connector or terminal is found damaged, replace the wire harness, connector and terminal as an assembly.**

DTC WILL SET WHEN:

DTC 21: The combined resistance of the driver air bag (inflator) module, contact coil assembly, harness wiring and connector terminal contact is above a specified value for specified time.

DTC 22: The combined resistance of the driver air bag (inflator) module, contact coil assembly, harness wiring and connector terminal contact is below a specified value for specified time.

DTC 24: The voltage measured at driver air bag initiator circuit is below a specified value for specified time.

DTC 25: The voltage measured at driver air bag initiator circuit is above a specified value for specified time.

TABLE TEST DESCRIPTION:

DTC 21, 22, 24 and 25:

STEP 1: Check whether malfunction is in contact coil and driver air bag (inflator) module or the others.

STEP 2: Check driver air bag (inflator) module initiator circuit in air bag harness.

STEP 3: Check whether malfunction is in contact coil or driver air bag (inflator) module.

DIAGNOSTIC FLOW TABLE
DTC 21:

STEP	ACTION	YES	NO
1	1) With ignition switch OFF, disconnect contact coil connector located near the base of the steering column. 2) Check proper connection to contact coil at terminals in "B" connector. 3) If OK then connect Special Tool (B) to contact coil connector disconnected at step 1. 4) With ignition switch ON, is DTC 21 current?	Go to step 2.	Go to step 3.
2	1) With ignition switch OFF, disconnect SDM. 2) Check proper connection to SDM at terminals "A6" and "A7". 3) Release shorting bar in SDM connector, referring to the figure below. 4) If OK then measure resistance between "A6" and "A7" terminals with connected Special Tool (B). 5) Is resistance 4.5 Ω or less?	Substitute a known-good SDM and recheck.	Repair high resistance or open in "G" or "G/R" wire circuit.
3	1) With ignition switch OFF, disconnect Special Tool (B) then reconnect contact coil connector located near the base of the steering column. 2) Remove driver air bag (inflator) module from steering wheel (Refer to SECTION 3C). 3) Check proper connection to driver air bag (inflator) module at terminals in "C" connector. 4) If OK then connect Special Tool (B) to driver air bag (inflator) module disconnected at step 1. 5) With ignition switch ON, is DTC 21 current?	1) Ignition switch OFF. 2) Replace contact coil assembly (Refer to SECTION 3C).	1) Ignition switch OFF. 2) Replace driver air bag (inflator) module (Refer to SECTION 3C).

Fig. for STEP 1 and 2

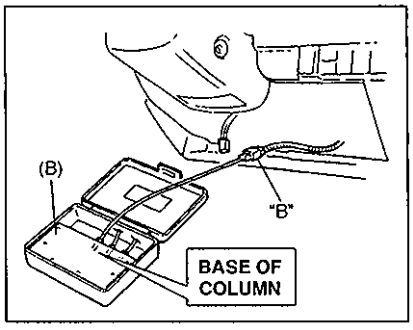

Fig. for STEP 2

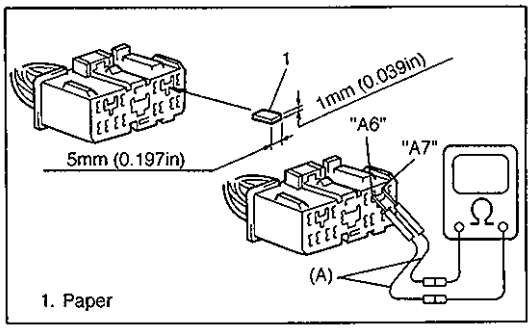

Fig. for STEP 3

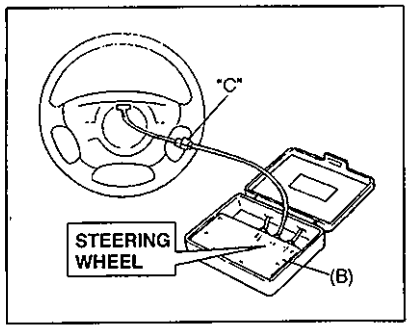

Special Tool
(A): 09932-76010
(B): 09932-75010

NOTE:
Upon completion of inspection and repair work, perform following items.
1) Reconnect all air bag system components, ensure all components are properly mounted.
2) Clear diagnostic trouble codes (Refer to "Diagnostic Trouble Code (DTC) Clearance"), if any.
3) Repeat "Air Bag Diagnostic System Check", referring to p.10B-9 and 10 to confirm that the trouble has been corrected.

DTC 22:

STEP	ACTION	YES	NO
1	1) With ignition switch OFF, disconnect contact coil connector located near the base of the steering column. 2) Check proper connection to contact coil at terminals in "B" connector. 3) If OK then connect Special Tool (B) to contact coil connector disconnected at step 1. 4) With ignition switch ON, is DTC 22 current?	Go to step 2.	Go to step 3.
2	1) With ignition switch OFF, disconnect SDM. 2) Check proper connection to SDM at terminals "A6" and "A7". 3) Release shorting bar in SDM connector, referring to the figure below. 4) If OK then measure resistance between "A6" and "A7" terminals with connected Special Tool (B). 5) Is resistance 1.7 Ω or more?	Substitute a known-good SDM and recheck.	Repair short from "G" wire circuit to "G/R" wire circuit or from "G" or "G/R" wire circuit to other wire circuit.
3	1) With ignition switch OFF, disconnect Special Tool (B) then reconnect contact coil connector located near the base of the steering column. 2) Remove driver air bag (inflator) module from steering wheel (Refer to SECTION 3C). 3) Check proper connection to driver air bag (inflator) module at terminals in "C" connector. 4) If OK then connect Special Tool (B) to driver air bag (inflator) module disconnected at step 1. 5) With ignition switch ON, is DTC 22 current?	1) Ignition switch OFF. 2) Replace contact coil assembly (Refer to SECTION 3C).	1) Ignition switch OFF. 2) Replace driver air bag (inflator) module (Refer to SECTION 3C).

Fig. for STEP 1 and 2

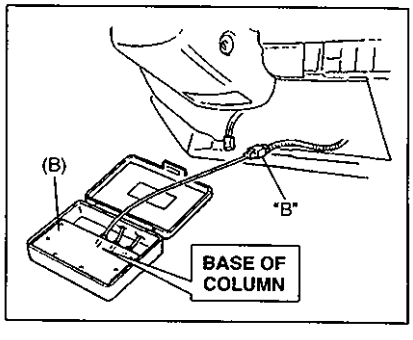

Fig. for STEP 2

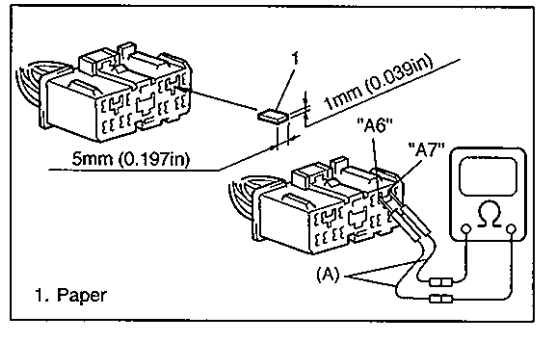

Fig. for STEP 3

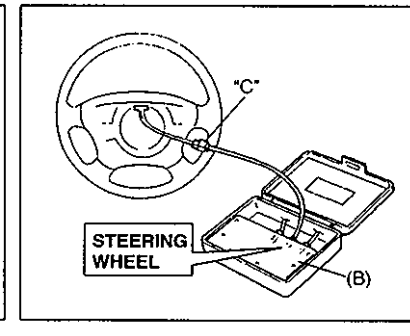

Special Tool
(A): 09932-76010
(B): 09932-75010

NOTE:
Upon completion of inspection and repair work, perform following items.
1) Reconnect all air bag system components, ensure all components are properly mounted.
2) Clear diagnostic trouble codes (Refer to "Diagnostic Trouble Code (DTC) Clearance"), if any.
3) Repeat "Air Bag Diagnostic System Check", referring to p.10B-9 and 10 to confirm that the trouble has been corrected.

DTC 24:

STEP	ACTION	YES	NO
1	1) With ignition switch OFF, disconnect contact coil connector located near the base of the steering column. 2) Check proper connection to contact coil at terminals in "B" connector. 3) If OK then connect Special Tool (B) to contact coil connector disconnected at step 1. 4) With ignition switch ON, is DTC 24 current?	Go to step 2.	Go to step 3.
2	1) With ignition switch OFF, disconnect Special Tool (B) and SDM. 2) Measure resistance between "A6" and "A10" terminals. 3) Is resistance 10 Ω or more?	Substitute a known-good SDM and recheck.	Repair short from "G" or "G/R" wire circuit to ground.
3	1) With ignition switch OFF, disconnect Special Tool (B) then reconnect contact coil connector located near the base of the steering column. 2) Remove driver air bag (inflator) module from steering wheel (Refer to SECTION 3C). 3) Check proper connection to driver air bag (inflator) module at terminals in "C" connector. 4) If OK then connect Special Tool (B) to driver air bag (inflator) module disconnected at step 1. 5) With ignition switch ON, is DTC 24 current?	1) Ignition switch OFF. 2) Replace contact coil assembly (Refer to SECTION 3C).	1) Ignition switch OFF. 2) Replace driver air bag (inflator) module (Refer to SECTION 3C).

Fig. for STEP 1 and 2

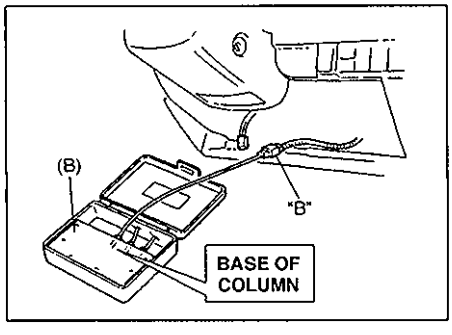

Fig. for STEP 2

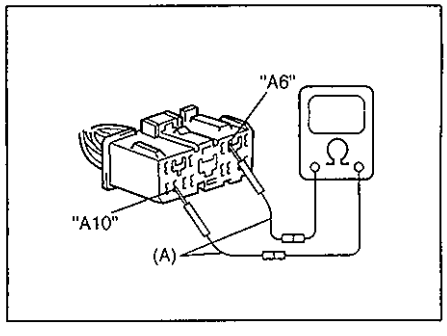

Fig. for STEP 3

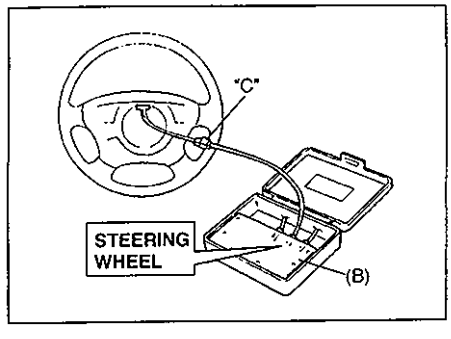

Special Tool
(A): 09932-76010
(B): 09932-75010

NOTE:
Upon completion of inspection and repair work, perform following items.
1) Reconnect all air bag system components, ensure all components are properly mounted.
2) Clear diagnostic trouble codes (Refer to "Diagnostic Trouble Code (DTC) Clearance"), if any.
3) Repeat "Air Bag Diagnostic System Check", referring to p.10B-9 and 10 to confirm that the trouble has been corrected.

DTC 25:

STEP	ACTION	YES	NO
1	1) With ignition switch OFF, disconnect contact coil connector located near the base of the steering column. 2) Check proper connection to contact coil at terminals in "B" connector. 3) If OK then connect Special Tool (B) to contact coil connector disconnected at step 1. 4) With ignition switch ON, is DTC 25 current?	Go to step 2.	Go to step 3.
2	1) With ignition switch OFF, disconnect Special Tool (B) and SDM. 2) Measure voltage from "A7" terminal to body ground. 3) With ignition switch ON, is voltage 1 V or less?	Substitute a known-good SDM and recheck.	Repair short from "G" or "G/R" wire circuit to power circuit.
3	1) With ignition switch OFF, disconnect Special Tool (B) then reconnect contact coil connector located near the base of the steering column. 2) Remove driver air bag (inflator) module from steering wheel (Refer to SECTION 3C). 3) Check proper connection to driver air bag (inflator) module at terminals in "C" connector. 4) If OK then connect Special Tool (B) to driver air bag (inflator) module disconnected at step 1. 5) With ignition switch ON, is DTC 25 current?	1) Ignition switch OFF. 2) Replace contact coil assembly (Refer to SECTION 3C).	1) Ignition switch OFF. 2) Replace driver air bag (inflator) module (Refer to SECTION 3C).

Fig. for STEP 1 and 2

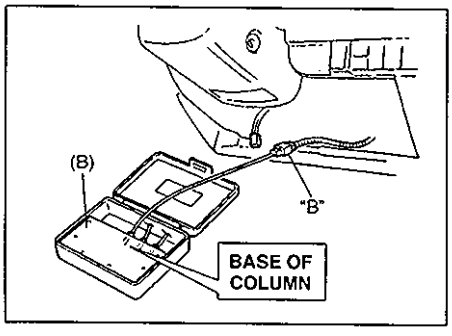

Fig. for STEP 2

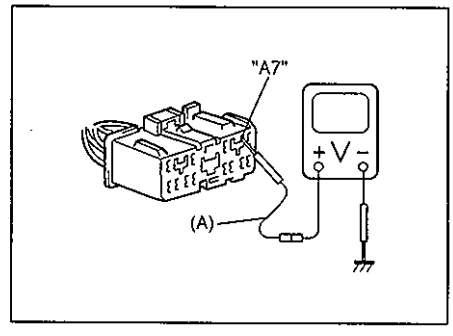

Fig. for STEP 3

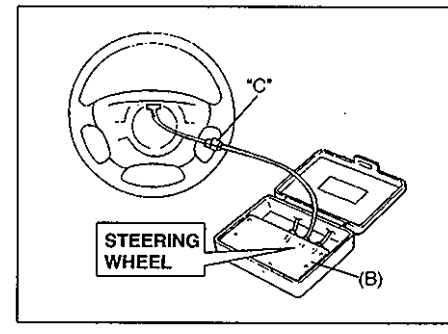

Special Tool
(A): 09932-76010
(B): 09932-75010

NOTE:
Upon completion of inspection and repair work, perform following items.
1) Reconnect all air bag system components, ensure all components are properly mounted.
2) Clear diagnostic trouble codes (Refer to "Diagnostic Trouble Code (DTC) Clearance"), if any.
3) Repeat "Air Bag Diagnostic System Check", referring to p.10B-9 and 10 to confirm that the trouble has been corrected.

DTC 31 – POWER SOURCE VOLTAGE HIGH
DTC 32 – POWER SOURCE VOLTAGE LOW

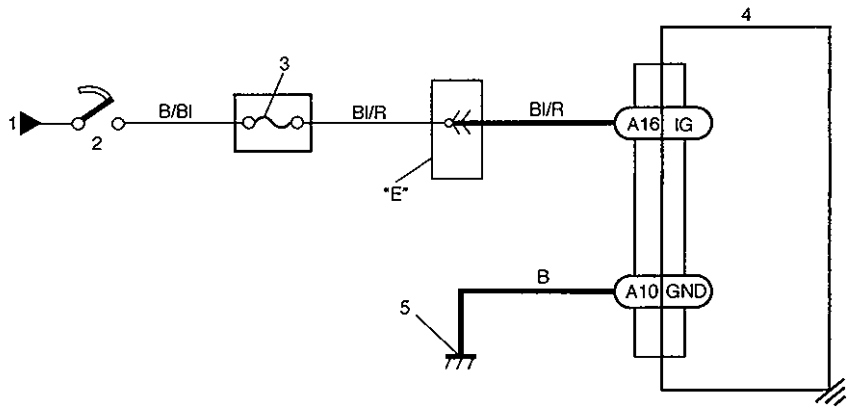

1. From main fuse
2. Ignition switch
3. "AIR BAG" fuse in "AIR BAG" fuse box
4. SDM
5. Ground for air bag system

: Air bag harness

CAUTION:
- **Be sure to perform "Air Bag Diagnostic System Check" described on page 10B-9 before starting diagnosis according to flow table.**
- **When measurement of resistance or voltage is required in this table, use a tester along with a correct terminal adapter from special tool (Connector test adapter kit).**
- **When a check for proper connection is required, refer to "Intermittent And Poor Connections" in this section.**
- **If there is open circuit in the air bag wire harness, connector or terminal is found damaged, replace the wire harness, connector and terminal as an assembly.**

DTC WILL SET WHEN:

DTC 31: The power source voltage to SDM is above specified value for specified time.

DTC 32: The power source voltage is below an approx. 8 V for specified time.

TABLE TEST DESCRIPTION:

DTC 31:

STEP 1:Check if voltage applied to SDM is within normal range.

STEP 2:Check if DTC 31 still exists.

DTC 32:

STEP 1:Check if voltage applied to SDM is within normal range.

STEP 2:Check if DTC 32 still exists.

DIAGNOSTIC FLOW TABLE
DTC 31:

STEP	ACTION	YES	NO
1	1) With ignition switch OFF, disconnect SDM. 2) Check proper connection to SDM at "A16" terminal. 3) If OK then ignition switch ON, and then check voltage from "A16" terminal on SDM harness connector to body ground. 4) Is voltage 14 V or less?	Go to step 2.	Check Charging System and repair as necessary. (Refer to SECTION 6H "Changing System")
2	1) With ignition switch OFF, reconnect SDM 2) With ignition switch ON, is DTC 31 current?	Substitute a known-good SDM and recheck.	Check Charging System and repair as necessary. (Refer to SECTION 6H "Changing System")

Fig. for STEP 1

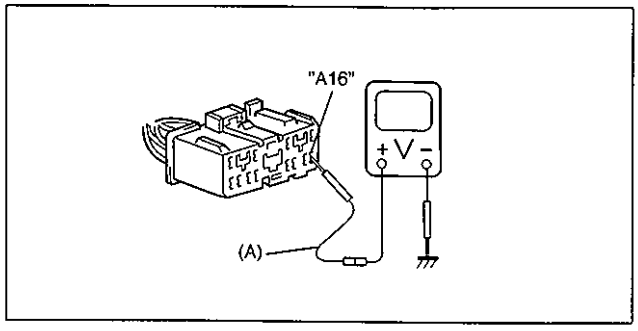

Special Tool
(A): 09932-76010

NOTE:
Upon completion of inspection and repair work, perform following items.
1) Reconnect all air bag system components, ensure all components are properly mounted.
2) Clear diagnostic trouble codes (Refer to "Diagnostic Trouble Code (DTC) Clearance"), if any.
3) Repeat "Air Bag Diagnostic System Check", referring to p.10B-9 and 10 to confirm that the trouble has been corrected.

DTC 32:

STEP	ACTION	YES	NO
1	1) Measure voltage on battery. 2) Is voltage 11 V or more?	Go to step 2.	Check Charging System and repair as necessary. (Refer to SECTION 6H "Changing System")
2	1) With ignition switch OFF, disconnect SDM. 2) Check proper connection to SDM at "A16" terminal. 3) If OK then ignition switch ON, and then check voltage from "A16" terminal on SDM connector to body ground. 4) Is voltage 8 V or more?	Go to step 4.	Go to step 3.
3	1) With ignition switch OFF, disconnect "E" connector. 2) Check proper connection at "BI/R" wire terminal in "E" connector. 3) If OK then ignition switch ON, and then check voltage from "BI/R" wire terminal in "E" connector on instrument panel harness to body ground. 4) Is voltage 8 V or more?	Repair poor connection, high resistance in "BI/R" or "B/BI" circuit of air bag harness or "AIR BAG" fuse.	Possibly faulty points are as follows. Check each of them and repair as necessary. • Circuit from battery to "E" connector • Charging System (Refer to SECTION 6H "Changing System")
4	1) With ignition switch OFF, reconnect SDM 2) With ignition switch ON, is DTC 32 current?	Substitute a known-good SDM and recheck.	Check Charging System and repair as necessary. (Refer to SECTION 6H "Changing System")

Fig. for STEP 2

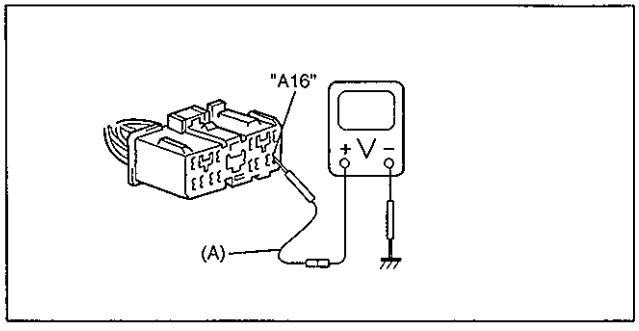

Fig. for STEP 3

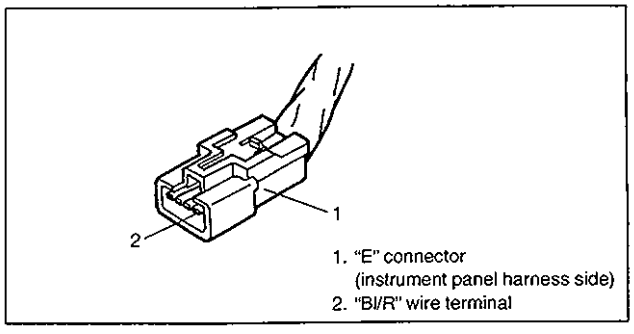

Special Tool
(A): 09932-76010

NOTE:
Upon completion of inspection and repair work, perform following items.
1) Reconnect all air bag system components, ensure all components are properly mounted.
2) Clear diagnostic trouble codes (Refer to "Diagnostic Trouble Code (DTC) Clearance"), if any.
3) Repeat "Air Bag Diagnostic System Check", referring to p.10B-9 and 10 to confirm that the trouble has been corrected.

DTC 41 – DRIVER PRETENSIONER INITIATOR CIRCUIT RESISTANCE HIGH
DTC 42 – DRIVER PRETENSIONER INITIATOR CIRCUIT RESISTANCE LOW
DTC 43 – DRIVER PRETENSIONER INITIATOR CIRCUIT SHORT TO GROUND
DTC 44 – DRIVER PRETENSIONER INITIATOR CIRCUIT SHORT TO POWER CIRCUIT
DTC 45 – PASSENGER PRETENSIONER INITIATOR CIRCUIT RESISTANCE HIGH
DTC 46 – PASSENGER PRETENSIONER INITIATOR CIRCUIT RESISTANCE LOW
DTC 47 – PASSENGER PRETENSIONER INITIATOR CIRCUIT SHORT TO GROUND
DTC 48 – PASSENGER PRETENSIONER INITIATOR CIRCUIT SHORT TO POWER CIRCUIT

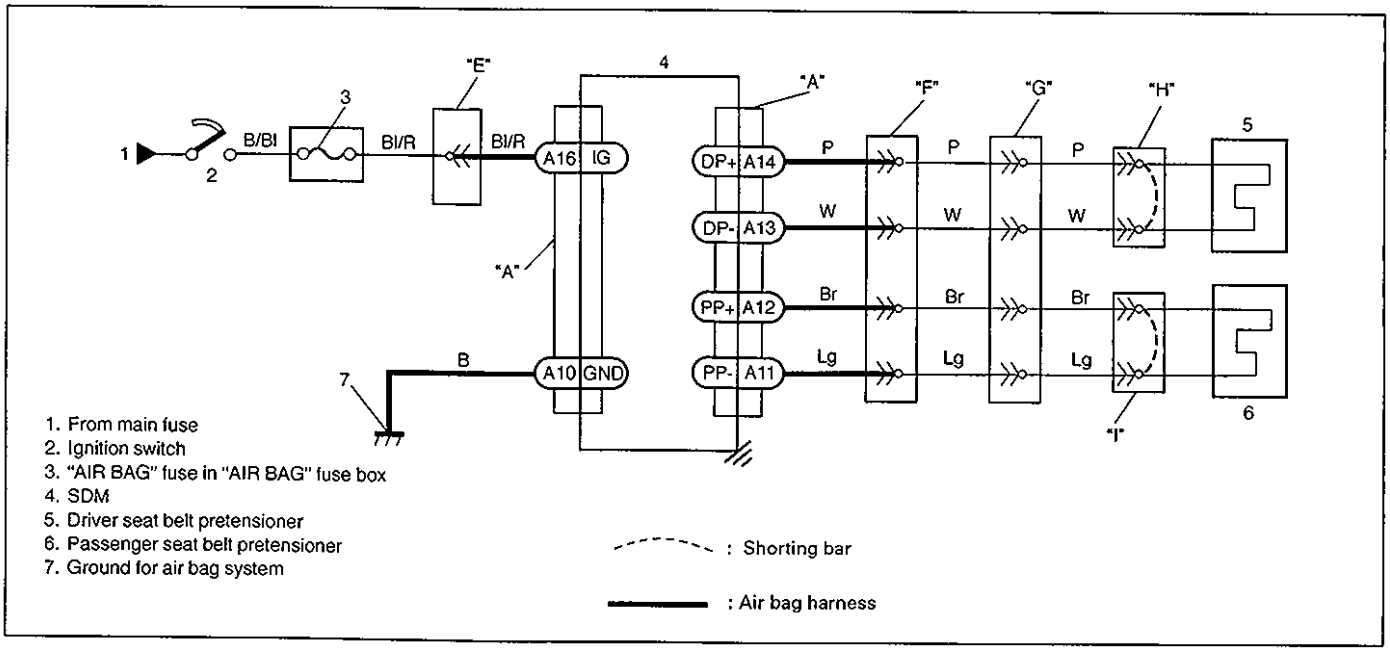

CAUTION:

- **Be sure to perform "Air Bag Diagnostic System Check" described on page 10B-9 before starting diagnosis according to flow table.**
- **When measurement of resistance or voltage is required in this table, use a tester along with a correct terminal adapter from special tool (Connector test adapter kit).**
- **When a check for proper connection is required, refer to "Intermittent And Poor Connections" in this section.**
- **If there is open circuit in the air bag wire harness, connector or terminal is found damaged, replace the wire harness, connector and terminal as an assembly.**

DTC WILL SET WHEN:

DTC 41 and 45: The resistance of driver or passenger seat belt pretensioner initiator circuit is above a specified value for specified time.

DTC 42 and 46: The resistance of driver or passenger seat belt pretensioner initiator circuit is below a specified value for specified time.

DTC 43 and 47: The voltage measured at driver or passenger seat belt pretensioner initiator circuit is below a specified value for specified time.

DTC 44 and 48: The voltage measured at driver or passenger seat belt pretensioner initiator circuit is above a specified value for specified time.

TABLE TEST DESCRIPTION:

DTC 41, 42, 43, 44, 45, 46, 47 and 48:

STEP 1: Check whether malfunction is in seat belt pretensioner.

STEP 2: Check seat belt pretensioner initiator circuit in air bag harness.

DIAGNOSTIC FLOW TABLE
DTC 41 and 45:

STEP	ACTION	YES	NO
1	1) With ignition switch OFF, remove center pillar inner garnish of applicable side then disconnect seat belt pretensioner connector. 2) Check proper connection to applicable seat belt pretensioner at terminals in "H" or "I" connector. 3) If OK then connect Special Tool (B) to seat belt pretensioner connector disconnected at the step 1. 4) With ignition switch ON, is DTC 41 or 45 still current?	Go to step 2.	1) Ignition switch OFF. 2) Replace seat belt pretensioner (Refer to SECTION 10A).
2	1) With ignition switch OFF, disconnect SDM. 2) Check proper connection to SDM at terminals "A13" and "A14" or "A11" and "A12". 3) If OK then measure resistance between "A13" and "A14" terminals or "A11" and "A12" terminals with connected Special Tool (B). 4) Is resistance 4.5 Ω or less?	Substitute a known-good SDM and recheck.	**DTC41:** Repair high resistance or open in "P" or "W" wire circuit. **DTC45:** Repair high resistance or open in "Lg" or "Br" wire circuit.

Fig. for STEP 1 and 2

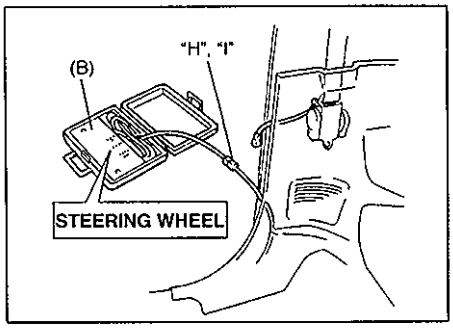

Fig. for STEP 2

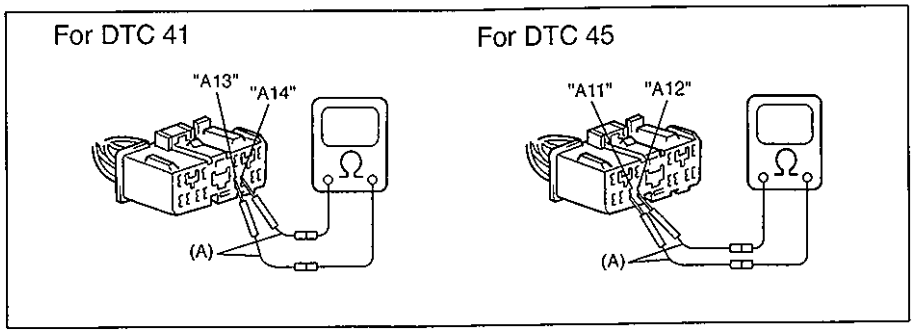

Special Tool
(A): 09932-76010
(B): 09932-75010

NOTE:
Upon completion of inspection and repair work, perform following items.
1) Reconnect all air bag system components, ensure all components are properly mounted.
2) Clear diagnostic trouble codes (Refer to "Diagnostic Trouble Code (DTC) Clearance"), if any.
3) Repeat "Air Bag Diagnostic System Check", referring to p.10B-9 and 10 to confirm that the trouble has been corrected.

DTC 42 and 46:

STEP	ACTION	YES	NO
1	1) With ignition switch OFF, remove center pillar inner garnish of applicable side then disconnect seat belt pretensioner connector. 2) Check proper connection to applicable seat belt pretensioner at terminals in "H" or "I" connector. 3) If OK then connect Special Tool (B) to seat belt pretensioner connector disconnected at the step 1. 4) With ignition switch ON, is DTC 42 or 46 still current?	Go to step 2.	1) Ignition switch OFF. 2) Replace seat belt pretensioner (Refer to SECTION 10A).
2	1) With ignition switch OFF, disconnect SDM. 2) Check proper connection to SDM at terminals "A13" and "A14" or "A11" and "A12". 3) If OK then measure resistance between "A13" and "A14" terminals or "A11" and "A12" terminals with connected Special Tool (B). 4) Is resistance 1.4 Ω or more?	Substitute a known-good SDM and recheck.	**DTC42:** Repair short from "P" wire circuit to "W" wire circuit or from "P" or "W" wire circuit to other wire circuit. **DTC46:** Repair short from "Lg" wire circuit to "Br" wire circuit or from "Lg" or "Br" wire circuit to other wire circuit.

Fig. for STEP 1 and 2

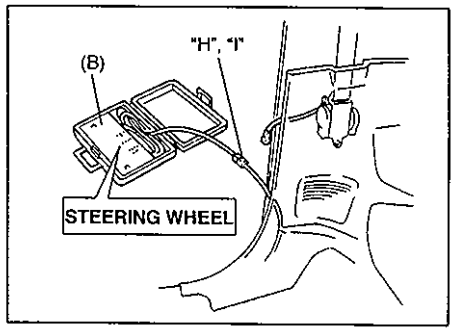

Fig. for STEP 2

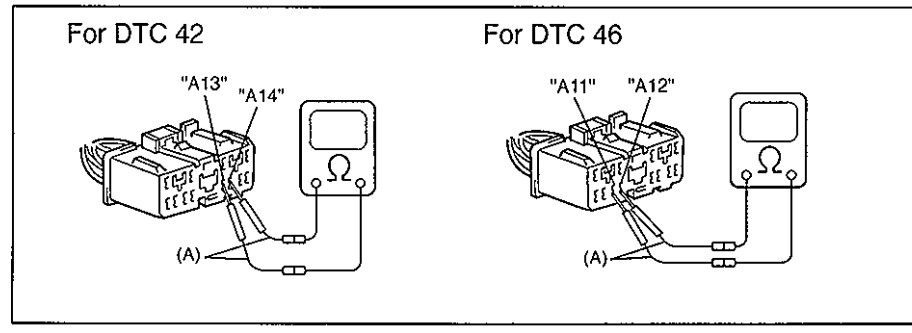

Special Tool
(A): 09932-76010
(B): 09932-75010

NOTE:
Upon completion of inspection and repair work, perform following items.
1) Reconnect all air bag system components, ensure all components are properly mounted.
2) Clear diagnostic trouble codes (Refer to "Diagnostic Trouble Code (DTC) Clearance"), if any.
3) Repeat "Air Bag Diagnostic System Check", referring to p.10B-9 and 10 to confirm that the trouble has been corrected.

DTC 43 and 47:

STEP	ACTION	YES	NO
1	1) With ignition switch OFF, remove center pillar inner garnish of applicable side then disconnect seat belt pretensioner connector. 2) Check proper connection to applicable seat belt pretensioner at terminals in "H" or "I" connector. 3) If OK then connect Special Tool (B) to seat belt pretensioner connector disconnected at the step 1. 4) With ignition switch ON, is DTC 43 or 47 still current?	Go to step 2.	1) Ignition switch OFF. 2) Replace seat belt pretensioner (Refer to SECTION 10A).
2	1) With ignition switch OFF, disconnect Special Tool (B) and SDM. 2) Measure resistance between "A13" or "A11" and "A10" terminals. 3) Is resistance 10 Ω or more?	Substitute a known-good SDM and recheck.	**DTC43:** Repair short "P" or "W" wire circuit to ground. **DTC47:** Repair short from "Lg" or "Br" wire circuit to ground.

Fig. for STEP 1 and 2

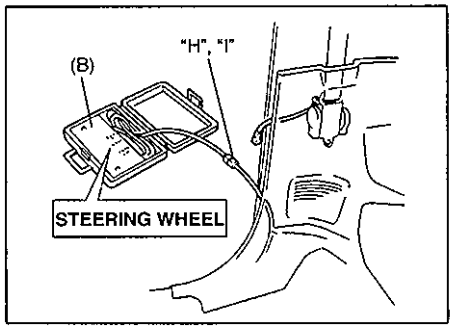

Fig. for STEP 2

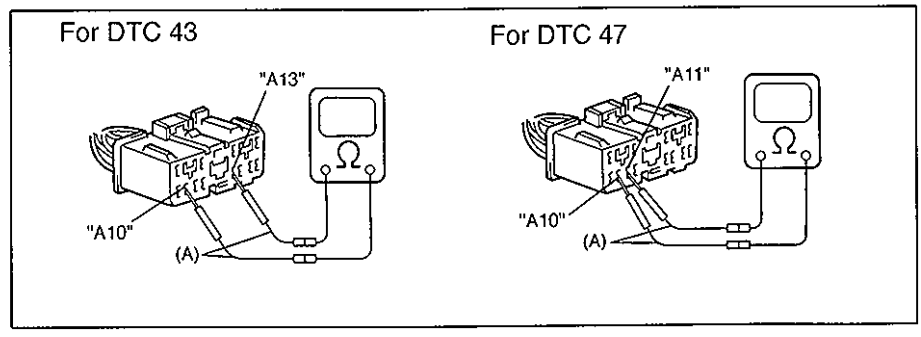

Special Tool
(A): 09932-76010
(B): 09932-75010

NOTE:
Upon completion of inspection and repair work, perform following items.
1) Reconnect all air bag system components, ensure all components are properly mounted.
2) Clear diagnostic trouble codes (Refer to "Diagnostic Trouble Code (DTC) Clearance"), if any.
3) Repeat "Air Bag Diagnostic System Check", referring to p.10B-9 and 10 to confirm that the trouble has been corrected.

DTC 44 and 48:

STEP	ACTION	YES	NO
1	1) With ignition switch OFF, remove center pillar inner garnish of applicable side then disconnect seat belt pretensioner connector. 2) Check proper connection to applicable seat belt pretensioner at terminals in "H" or "I" connector. 3) If OK then connect Special Tool (B) to seat belt pretensioner connector disconnected at the step 1. 4) With ignition switch ON, is DTC 44 or 48 still current?	Go to step 2.	1) Ignition switch OFF. 2) Replace seat belt pretensioner (Refer to SECTION 10A).
2	1) With ignition switch OFF, disconnect Special Tool (B) and SDM. 2) Measure voltage from "A14" or "A12" terminal to body ground. 3) With ignition switch ON, is voltage 1 V or less?	Substitute a known-good SDM and recheck.	**DTC44:** Repair short "P" or "W" wire circuit to power circuit. **DTC48:** Repair short from "Lg" or "Br" wire circuit to power circuit.

Fig. for STEP 1 and 2

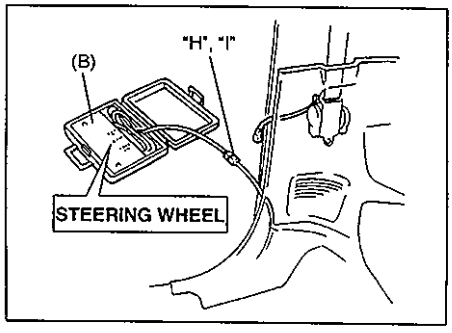

Fig. for STEP 2

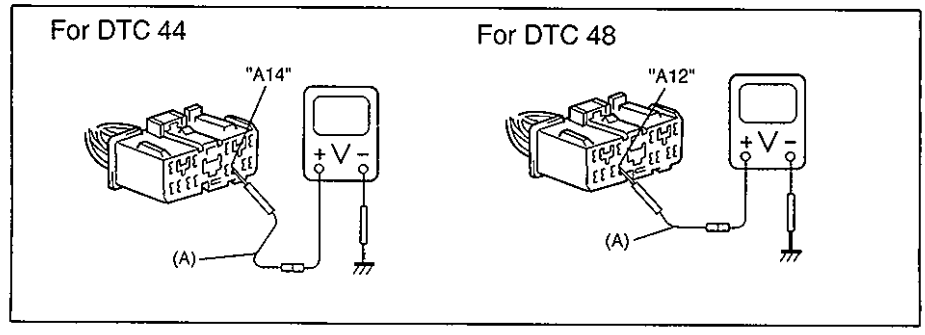

Special Tool
(A): 09932-76010
(B): 09932-75010

NOTE:
Upon completion of inspection and repair work, perform following items.
1) Reconnect all air bag system components, ensure all components are properly mounted.
2) Clear diagnostic trouble codes (Refer to "Diagnostic Trouble Code (DTC) Clearance"), if any.
3) Repeat "Air Bag Diagnostic System Check", referring to p.10B-9 and 10 to confirm that the trouble has been corrected.

CODE 51 – FRONTAL CRASH DETECTED (SYSTEM ACTIVATION COMMAND OUTPUTTED)

DTC WILL SET WHEN:
The SDM detects a frontal crash of sufficient force to warrant activation of the air bag system. (SDM outputs a deployment/activation command.)

TABLE TEST DESCRIPTION:
STEP 1: Check that DTC51 has been set although air bag has not been deployed.
STEP 2: Check that DTC has been set due to failure of SDM.

NOTE:
Before executing items in this table, be sure to perform "Air Bag Diagnostic System Check".

STEP	ACTION	YES	NO
1	1) Ignition switch OFF. 2) Has air bag system deployed?	Replace components and perform inspections as directed in "Repairs and Inspections Required After an Accident" in this section.	Go to step 2.
2	1) Inspect front of vehicle and undercarriage for signs of impact. 2) Are there signs of impact?	Replace components and perform inspections as directed in "Repairs and Inspections Required After an Accident" in this section.	Substitute a known-good SDM and recheck.

NOTE:
Upon completion of inspection and repair work, perform following items.
1) Reconnect all air bag system components, ensure all components are properly mounted.
2) Repeat "Air Bag Diagnostic System Check", referring to p.10B-9 and 10 to confirm that the trouble has been corrected.

CODE 71 – INTERNAL SDM FAULT

DTC WILL SET WHEN:
An internal SDM fault is detected by SDM.

NOTE:
Before executing items below, be sure to perform "Air Bag Diagnostic System Check".

NOTE:
CODE 71 can never be cleared once it has been set.
1) Ignition switch OFF.
2) Replace SDM.
3) Repeat "Air Bag Diagnostic System Check", referring to p.10B-9 and 10.

CODE 13 – SYSTEM SPECIFICATIONS DIFFERENT FROM SDM SPECIFICATIONS

DTC WILL SET WHEN:
Specifications of the air bag system differ from those of SDM.

NOTE:
Before executing items below, be sure to perform "Air Bag Diagnostic System Check".

1) Ignition switch OFF.
2) Replace SDM.
3) Repeat "Air Bag Diagnostic System Check", referring to p.10B-9 and 10.

REPAIRS AND INSPECTIONS REQUIRED AFTER AN ACCIDENT

CAUTION:
- **All air bag system components, including the electrical harness (component mounting points), must be inspected after an accident. If any components are damaged or bent, they must be replaced even if air bag system activation did not occur.**
- **Never use air bag system parts from another vehicle.**
- **Do not attempt to service the parts below. Service of these parts is by replacement only.**
  – Driver/Passenger air bag (inflator) module, Driver/Passenger seat belt pretensioner (if equipped)
  – SDM
  – Contact coil and combination switch assembly
  – Air bag wire harness
- **Proper operation of the sensors and air bag system requires that any repairs to the vehicle structure return it to its original production configuration.**

CAUTION:
After detecting one time of such collision as to meet deployment conditions, the SDM must not be used. Refer to "Air Bag Diagnostic System Check" when checking the SDM.

ACCIDENT WITH DEPLOYMENT/ACTIVATION – COMPONENT REPLACEMENT

Certain air bag system components must be replaced. Those components are:
- Driver and passenger air bag (inflator) modules
  – Replace with new one.
- Driver and passenger seat belt pretensioners (if equipped)
  – Replace with new one as an assembly.
- SDM after detecting such collision as to meet deployment conditions
  – Replace with new one.

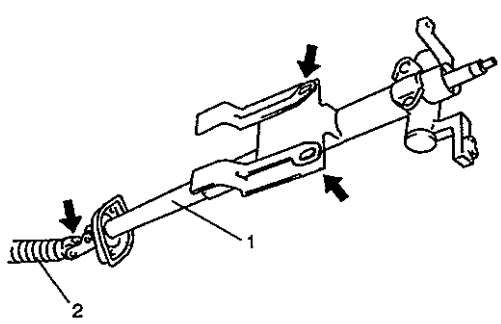

1. Steering column
2. Steering lower shaft

ACCIDENT WITH OR WITHOUT DEPLOYMENT/ACTIVATION – COMPONENT INSPECTIONS

Certain air bag and restraint system components must be inspected after any crash, whether the air bag deployed or not. Those components are:
- Steering column and shaft joints
  – Check for length, damage and bend according to "Checking Steering Column for Accident Damage" in SECTION 3C.
  If any faulty condition is found in above checks, replace faulty part.
- Steering column bracket and capsules
  – Check for damage and bent.
  If any faulty condition is found in above checks, replace faulty part.

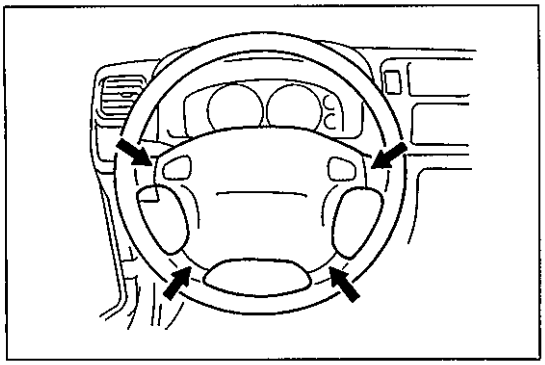

- Steering wheel and driver air bag (inflator) module
  - Check for damage or air bag (inflator) module fitness.
  - Check trim cover (pad surface) for cracks.
  - Check wire harness and connector for damage or tightness.

  If any faulty condition is found in above checks, replace faulty part.

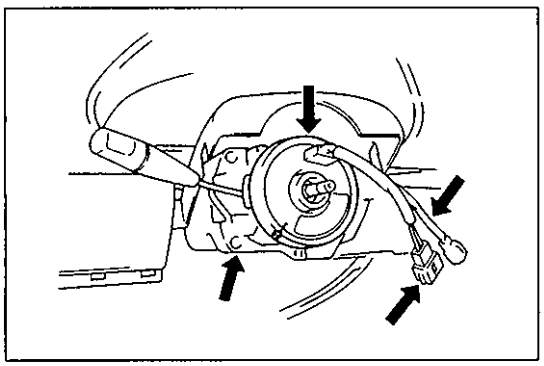

- Contact coil and combination switch assembly
  - Check wire harness and connectors for damage or tightness.
  - Check contact coil case for damage.

  If any faulty condition is found in above checks, replace.

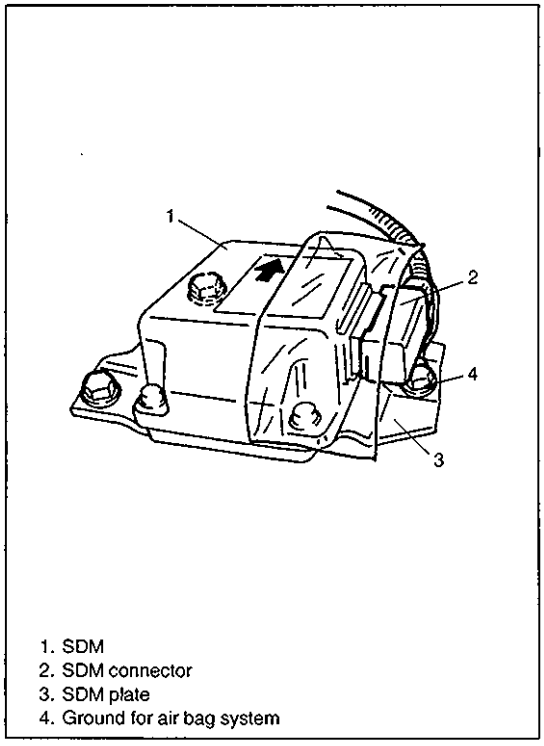

1. SDM
2. SDM connector
3. SDM plate
4. Ground for air bag system

- SDM and SDM plate
  - Check for external damage such as deformation, scratch, crack, peeled paint, etc.
  - Check that SDM cannot be installed properly due to a cause in itself. (There is a gap between SDM and SDM plate, or it cannot be fixed securely.)
  - Check that connector or lead wire of SDM has a scorching, melting or damage.
  - Check that connector is connected securely or locked.
  - Check SDM connector and terminals for tightness.
  - Check SDM sets a diagnostic trouble code (Refer to p.10B-11) and the diagnostic table leads to a malfunctioning SDM.

  If any faulty condition is found in above checks, replace.

- Instrument panel member and reinforcement
  - Check for any distortion, bending, cracking or other damage.

  If any faulty condition is found in above checks, replace.

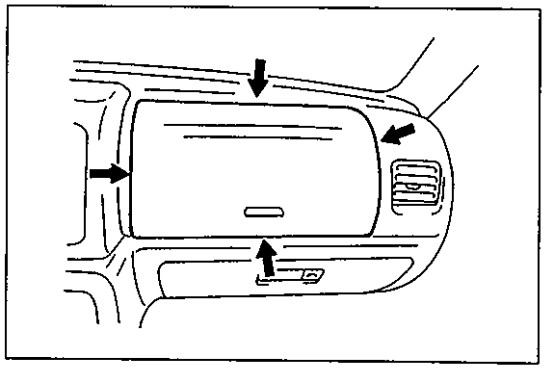

- Passenger air bag (inflator) module
  - Check for dents, cracks, damage or fitness.
  - Check trim cover for cracks or deformities.
  - Check harness and connector for damage or tightness.

  If any faulty condition is found in above checks, replace.

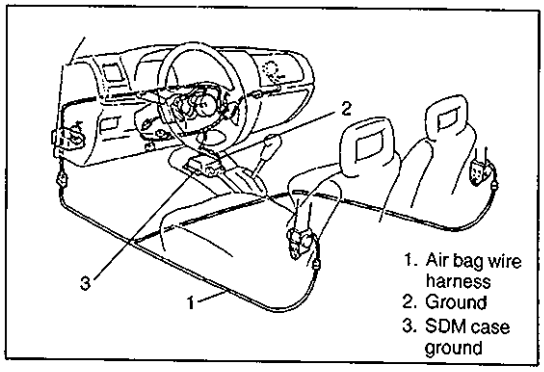

- Air bag wire harness and connections
  - Check for damages, deformities or poor connections. (Refer to "Intermittents and Poor Connections" in this section.)
  - Check wire harness clamps for tightness.

  If any faulty condition is found, correct or replace.

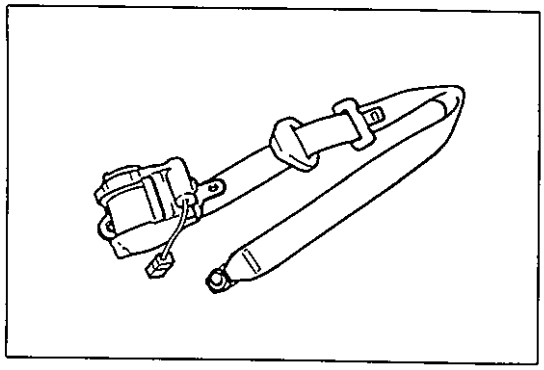

- Seat belt pretensioner (if equipped)
  - Check for dents, cracks, damage or fitness
  - Check harness and connector for damage or tightness.

  If any faulty condition is found in above checks, replace.

- Seat belts and mounting points
  - Refer to "Seat Belt" in SECTION 10A.
- "AIR BAG" warning lamp (air bag system)
  - After vehicle is completely repaired, perform "Air Bag Diagnostic System Check" under "Diagnosis" in this section.

ON-VEHICLE SERVICE

SERVICE PRECAUTIONS

SERVICE AND DIAGNOSIS

WARNING/CAUTION labels are attached on each part of air bag system components (SDM, air bag (inflator) modules and seat belt pretensioners). Be sure to follow the instructions.

WARNING:
- **If the air bag system and another vehicle system both need repair, Suzuki recommends that the air bag system be repaired first, to help avoid unintended air bag system activation.**
- **Do not modify the steering wheel, dashboard or any other air bag system components. Modifications can adversely affect air bag system performance and lead to injury.**
- **Failure to follow procedures could result in possible air bag system activation, personal injury or unneeded air bag system repairs.**

- Many of service procedures require disconnection of "AIR BAG" fuse and air bag (inflator) modules (driver and passenger) from initiator circuit to avoid an accidental deployment.
- Do not apply power to the air bag system unless all components are connected or a diagnostic chart requests it, as this will set a diagnostic trouble code.
- The "Air Bag Diagnostic System Check" must be the starting point of any air bag diagnostics. The "Air Bag Diagnostic System Check" will verify proper "AIR BAG" warning lamp operation and will lead you to the correct chart to diagnose any air bag malfunctions. Bypassing these procedures may result in extended diagnostic time, incorrect diagnosis, and incorrect parts replacements.
- Never use air bag component parts from another vehicle.
- If the vehicle will be exposed to temperatures over 93°C (200°F) (for example, during a paint baking process), remove the air bag system components beforehand to avoid component damage or unintended system activation.
- When servicing, if shocks may be applied (e.g., dropped from a height of 90 cm (3 ft) or more.) to air bag system component parts, remove those parts beforehand.
- When using electric welding, be sure to disconnect air bag (inflator) module and seat belt pretensioner connectors (driver and passenger) respectively.
- When applying paint around the air bag system related parts, use care so that the harness or connector will not be exposed to the paint mist.
- Never expose air bag system component parts directly to hot air (drying or baking the vehicle after painting) or flames.

WARNING:
When performing service on or around air bag system components or air bag wiring, follow the procedures listed in the following pages to temporarily disable the air bag system.
Failure to follow procedures could result in possible air bag system activation, personal injury or unneeded air bag system repairs.

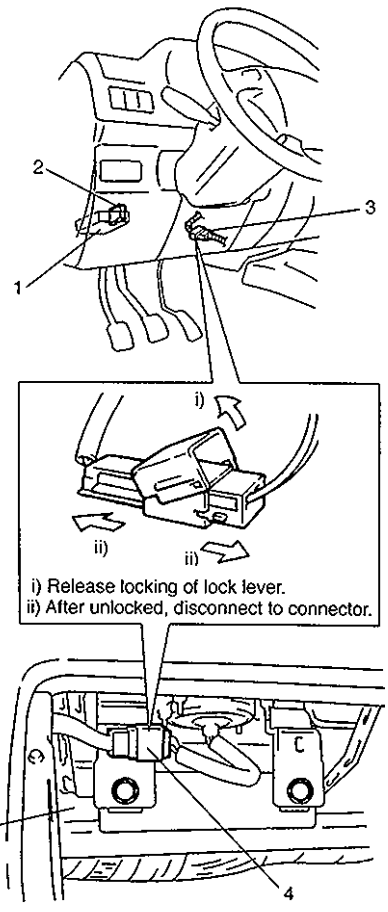

1. J/B
2. "AIR BAG" fuse box
3. Yellow connector of contact coil and combination switch assembly
4. Yellow connector of passenger air bag (inflator) module
5. Steering support member

DISABLING AIR BAG SYSTEM

1) Turn steering wheel so that vehicle's wheels (front tires) and pointing straight ahead.
2) Turn ignition switch to "LOCK" position and remove key.
3) Remove "AIR BAG" fuse from "AIR BAG" fuse box.
4) Disconnect Yellow connector of contact coil and combination switch assembly.
5) Pull out glove box while pushing its stopper from both right and left sides and disconnect Yellow connector of passenger air bag (inflator) module.

NOTE:
With "AIR BAG" fuse removed and ignition switch ON, "AIR BAG" warning lamp will be ON.
This is normal operation and does not indicate a air bag system malfunction.

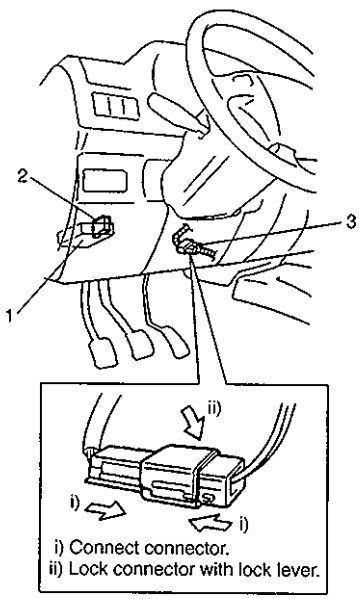

1. J/B
2. "AIR BAG" fuse box
3. Yellow connector of contact coil and combination switch assembly

ENABLING AIR BAG SYSTEM

1) Turn ignition switch to "LOCK" and remove key.
2) Connect Yellow connector of contact coil and combination switch assembly, and be sure to lock connector with lock lever.

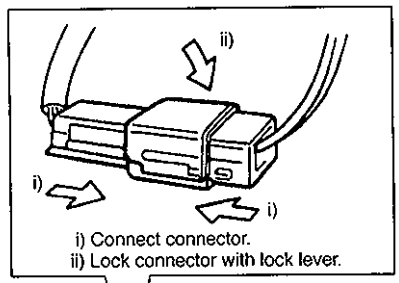

i) Connect connector.
ii) Lock connector with lock lever.

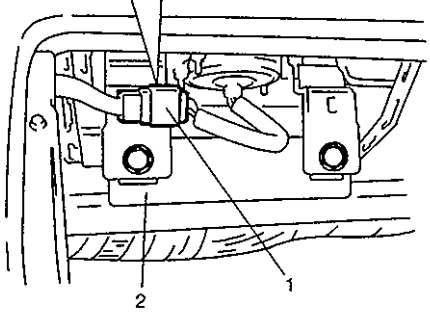

1. Yellow connector of passenger air bag (inflator) module
2. Steering support member

3) Connect Yellow connector of passenger air bag (inflator) module, and be sure to lock connector with lock lever.
4) Install glove box.
5) Install "AIR BAG" fuse to "AIR BAG" fuse box.
6) Turn ignition switch to "ON" and verify that "AIR BAG" warning lamp flashes 6 times and then turns off.
   If it does not operate as described, perform "Air Bag Diagnostic System Check" in this section.

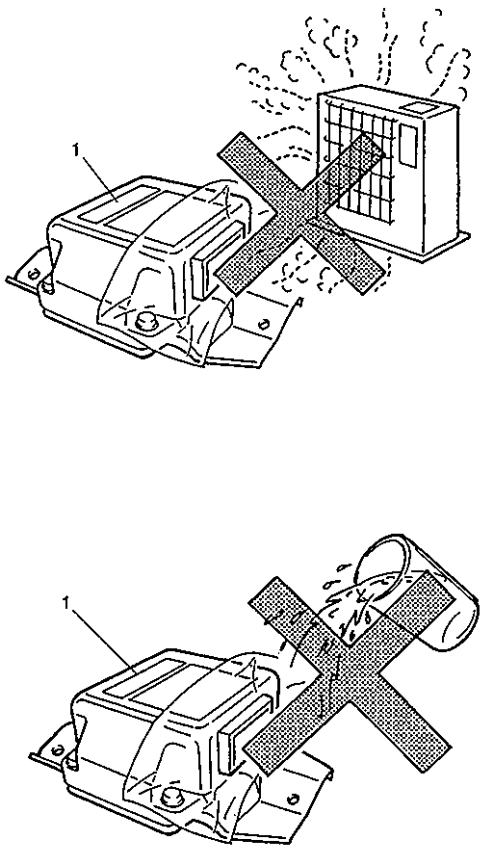

1. SDM

HANDLING AND STORAGE

SDM

WARNING:
Never power up air bag system when SDM is not rigidly attached to the vehicle. Otherwise, personal injury may result.

CAUTION:
After detecting one time of such collision as to meet deployment conditions, the SDM must not be used.
Refer to "Diagnosis" when checking the SDM.

- Never attempt disassembly of SDM.
- When storing SDM, select a place where neither high temperature nor high humidity is anticipated and oil, water and dust are kept off.
- If SDM was dropped from a height of 90 cm (3 ft) or more or if it is found to be damaged or deformed, replace it with a new one.
- If installation part of SDM was damaged, repair that part completely before reinstallation.
- All SDM and mounting bracket fasteners must be carefully torqued and the arrow must be pointed toward the front of the vehicle to ensure proper operation of the air bag system.

LIVE (UNDEPLOYED) AIR BAG (INFLATOR) MODULES

Special care is necessary when handling and storing a live (undeployed) air bag (inflator) modules.
The rapid gas generation produced during deployment of the air bag could cause the air bag (inflator) module, or an object in front of the air bag (inflator) module, to be thrown through the air in the unlikely event of an accidental deployment.

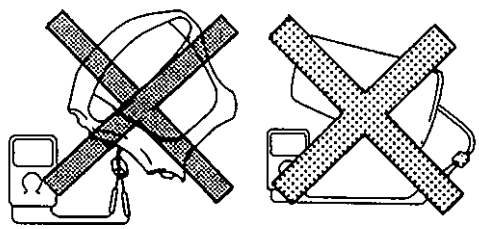

WARNING:
Never attempt to measure the resistance of the air bag (inflator) modules (driver and passenger). It is very dangerous as the electric current from the tester may deploy the air bag.

- Never attempt disassembly of the air bag (inflator) modules.
- If any abnormality is found, be sure to replace it with new one as an assembly.
- When an abnormality is noted as existing in the live (undeployed) air bag (inflator) module, be sure to deploy it before discarding it.
- When grease, cleaning agent, oil, water, etc., got on the air bag (inflator) modules (driver and passenger), wipe it off immediately with a dry cloth.
- If air bag (inflator) module was dropped from a height of 90 cm (3 ft) or more, it should be replaced with a new one as an assembly.

ALWAYS CARRY AIR BAG (INFLATOR) MODULE WITH TRIM COVER (AIR BAG OPENING) AWAY FROM BODY.

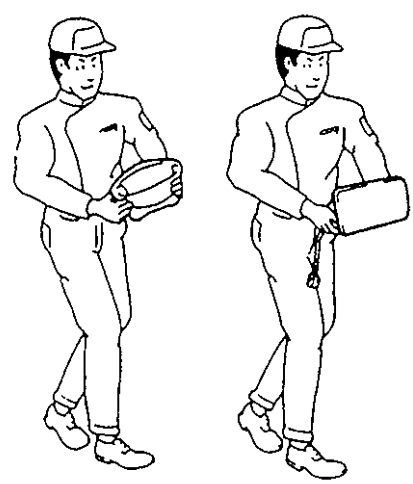

WARNING:
- **For handling and storage of a live air bag (inflator) module, select a place where the ambient temperature below 65°C (150°F), without high humidity and away from electric noise.**
- **When carrying a live air bag (inflator) module, make sure the bag opening is pointed away from you. In case of an accidental deployment, the bag will then deploy with minimal chance of injury. Never carry the air bag (inflator) module by the wires or connector on the underside of the module.**

Otherwise, personal injury may result.

ALWAYS PLACE AIR BAG (INFLATOR) MODULE ON WORKBENCH WITH TRIM COVER (AIR BAG OPENING) UP, AWAY FROM LOOSE OBJECTS.

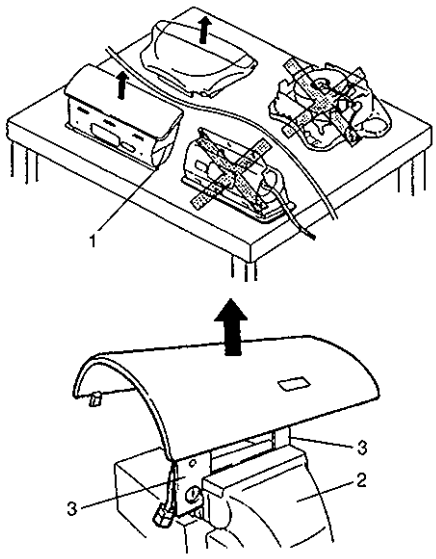

1. Slit on workbench
2. Workbench vise
3. Lower mounting bracket

WARNING:
When placing a live air bag (inflator) module on bench or other surface, always face the bag up, away from the surface. As the live passenger air bag (inflator) module must be placed with its bag (trim cover) facing up, place it on the workbench with a slit or use the workbench vise to hold it securely at its lower mounting bracket.
It is also prohibited to place anything on top of the trim cover and stack air bag (inflator) modules.
This is necessary so that a free space is provided to allow the air bag to expand in the unlikely event of accidental deployment.
Otherwise, personal injury may result.

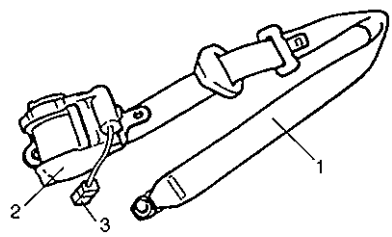

1. Webbing
2. Retractor assembly
3. Seat belt pretensioner connector

LIVE (INACTIVATED) SEAT BELT PRETENSIONERS

Special care is necessary when handling and storing a live (inactivated) seat belt pretensioners.
Also, when the seat belt pretensioners activate, gas is generated and the seat belt is retracted into the retractor quickly.
Note, therefore, that if they activate accidentally, the seat belt pretensioners and other object(s) around them may be thrown through the air.

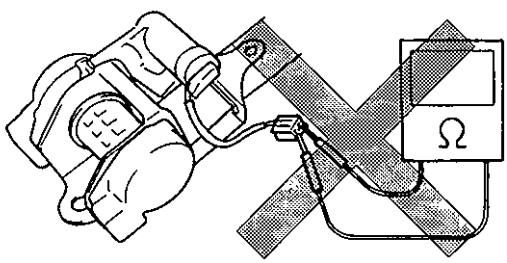

WARNING:
Never attempt to measure the resistance of the seat belt pretensioners. It is very dangerous as the electric current from the tester may activate pretensioner.

- Never attempt to disassemble the seat belt pretensioners (retractor assembly).
- If any abnormality is found, be sure to replace it with new one as an assembly.
- When an abnormality is noted as existing in the live (inactivated) seat belt pretensioner, be sure to activate it before discarding it.
- When grease, cleaning agent oil, water, etc., got on the seat belt pretensioners (retractor assembly), wipe it off immediately with a dry cloth.
- If seat belt pretensioner was dropped from a height of 90 cm (3 ft) or more, it should be replaced with a new one as an assembly.

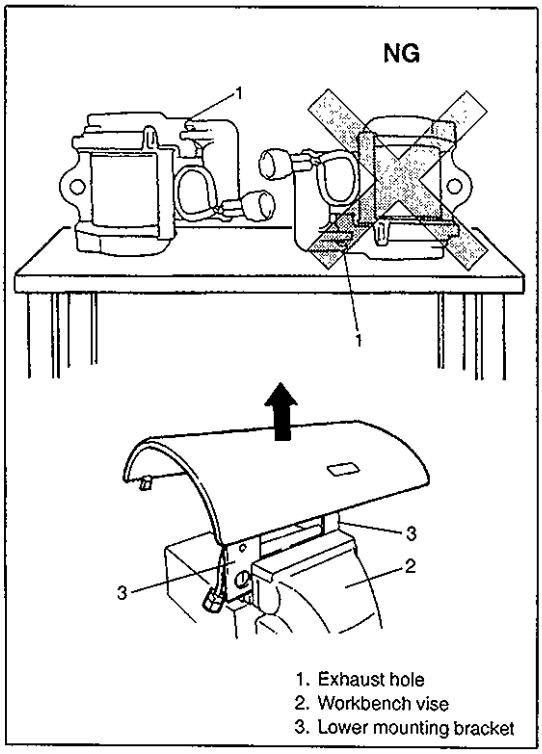

1. Exhaust hole
2. Workbench vise
3. Lower mounting bracket

WARNING:

- **For handling and storage of a live seat belt pretensioner, select a place where the ambient temperature below 65°C (150°F), without high humidity and away from electric noise.**
- **Never carry the seat belt pretensioner by the wires or connector on the underside of the pretensioner.**
- **When placing a live seat belt pretensioner on the workbench or other surface, be sure not to lay it with its exhaust hole provided side facing down. It is also prohibited to put something on its face with an exhaust hole or to put a seat belt pretensioner on top of another.**

Otherwise, personal injury may result.

DEPLOYED AIR BAG (INFLATOR) MODULES AND ACTIVATED SEAT BELT PRETENSIONERS

WARNING:

- **The air bag (inflator) module and seat belt pretensioner immediately after deployment/activation is very hot. Wait for at least 30 minutes to cool it off before proceeding the work.**
- **Do not apply water, oil, etc. to deployed air bag (inflator) module and to activate seat belt pretensioner.**
- **After an air bag (inflator) module has been deployed, the surface of the air bag may contain a powdery residue. This powder consists primarily of cornstarch (used to lubricate the bag as it inflates) and byproducts of the chemical reaction. As with many service procedures, gloves and safety glasses should be worn.**
- **Wash your hands with mild soap and water after completing the work.**

Refer to the procedure described under "Deployed Air Bag (Inflator) Module and Activated Seat Belt Pretensioner Disposal" in this section.

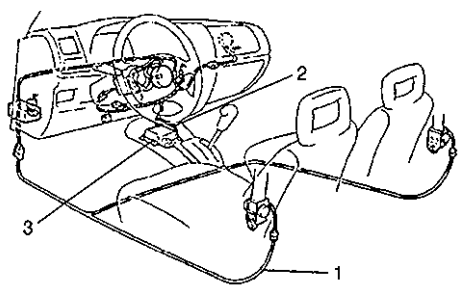

1. Air bag wire harness
2. Ground
3. SDM case ground

AIR BAG WIRE HARNESS AND CONNECTORS

Air bag wire harness can be identified easily as it is covered with a yellow protection tube. Be very careful when handling it.

- When an open in air bag wire harness, damaged wire harness, connector or terminal is found, replace wire harness, connectors and terminals as an assembly.
- When installing it, be careful so that the air bag wire harness is not caught or does not interfere with other parts.
- Make sure all air bag system grounding points are clean and grounds are securely fastened for optimum metal-to-metal contact. Poor grounding can cause intermittent problems that are difficult to diagnose.

DISPOSAL

Do not dispose of the live (undeployed) air bag (inflator) modules and the live (inactivated) seat belt pretensioners. When disposal is necessary, be sure to deploy/activate the air bag and seat belt pretensioner according to deployment/activation procedure described under "Air Bag (Inflator) Module and Seat Belt Pretensioner Disposal".

WARNING:
Failure to follow proper air bag (inflator) module and seat belt pretensioner disposal procedures can result in air bag deployment and pretensioner activation which could cause personal injury. Undeployed air bag (inflator) module and inactivated seat belt pretensioner must not be disposed of through normal refuse channels.
The undeployed air bag (inflator) module and inactivated seat belt pretensioner contain substances that can cause severe illness or personal injury if the sealed container is damaged during disposal.

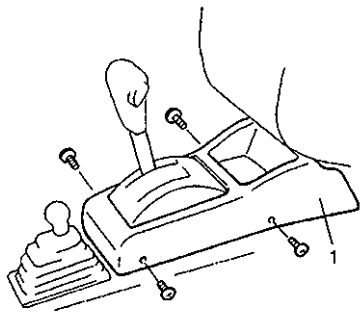

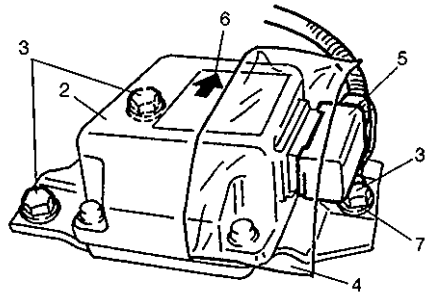

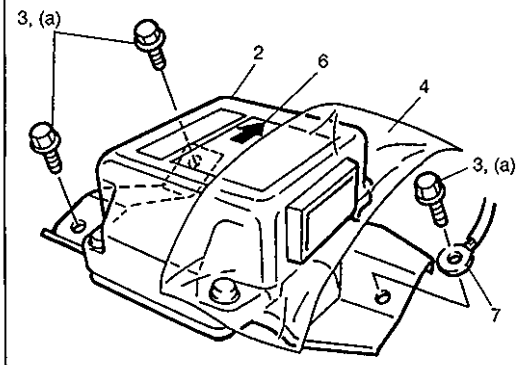

1. Console box
2. SDM
3. SDM bolt
4. SDM cover
5. SDM connector
6. Arrow
7. Ground for air bag system

SDM

WARNING:
During service procedures, be very careful when handling a Sensing and Diagnostic Module (SDM).
Be sure to read "Service Precautions" in this section before starting to work and observe every precaution during work. Neglecting them may result in personal injury or inactivation of the air bag system when necessary.

REMOVAL

1) Disconnect negative cable at battery.
2) Disable air bag system. Refer to "Disabling Air Bag System" earlier in this section.
3) Remove rear console box by removing screws.
4) Disconnect SDM connector from SDM.
5) Remove SDM (with SDM plate) as an assembly from vehicle.

NOTE:
Do not separate SDM and SDM plate.

INSPECTION

CAUTION:
- **Do not connect a tester whatever type it may be.**
- **Never repair or disassemble SDM.**
- **If SDM was dropped from a height of 90 cm (3 ft) or more, it should be replaced.**

- Check SDM and SDM plate for dents, cracks or deformation.
- Check SDM connector for damage, cracks or lock mechanism.
- Check SDM terminal for bent, corrosion or rust.

If any faulty condition is found in above checks, replace.

INSTALLATION

For installation, reverse removal procedure, nothing following points.

- Ensure that arrow on the SDM is pointing toward the front of the vehicle.
- Tighten SDM bolts to specified torque.

  Tightening Torque

  (a): 6 N·m (0.6 kg-m, 4.5 lb-ft)
- Connect SDM connector to SDM securely.
- Enable air bag system. Refer to "Enabling Air Bag System" earlier in this section.

PASSENGER AIR BAG (INFLATOR) MODULE

WARNING:
- **Never attempt to disassemble or repair the passenger air bag (inflator) module. If any abnormality is found, be sure to replace it with new one as an assembly.**
- **Be sure to read "Precautions" in this section before starting to work and observe every precaution during work. Neglecting them may result in personal injury or undeployment of the air bag when necessary.**

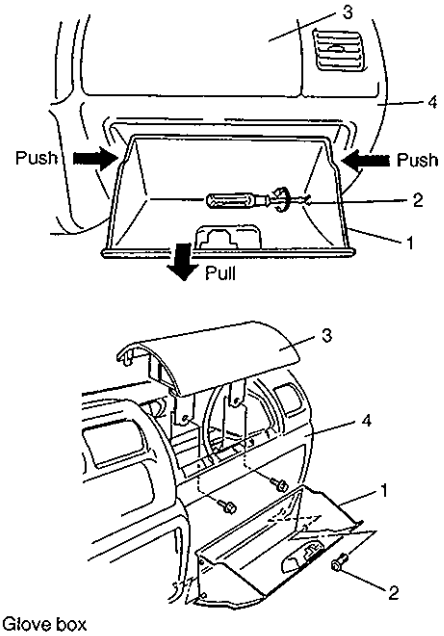

1. Glove box
2. Glove box circlip
3. Passenger air bag (inflator) module
4. Instrument panel

REMOVAL

1) Disconnect negative battery cable from battery.
2) Open glove box, then while pressing glove box stopper, pull out glove box from instrument panel and then remove glove box circlip and glove box from instrument panel.
3) Disable air bag system. Refer to "Disabling Air Bag System" earlier in this section.
4) Remove passenger air bag (inflator) module attaching bolts and passenger air bag (inflator) module from vehicle.

WARNING:
Observe "Service Precautions" earlier in this section for handling and storing it.

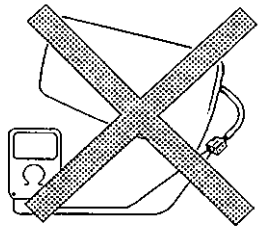

INSPECTION

WARNING:
Never measure resistance of passenger air bag (inflator) module or disassemble it. Otherwise personal injury may result.

CAUTION:
If air bag (inflator) module was dropped from a height or 90 cm (3 ft) or more, it should be replaced.

Check air bag (inflator) module appearance visually for following symptoms and if any one of them is applicable, replace with a new one.
- Air bag has deployed.
- There is a crack in trim cover (pad surface).
- Wire harness or connector is damaged.
- Air bag (inflator) module is damaged or a strong impact (e.g., dropping) was applied to it.

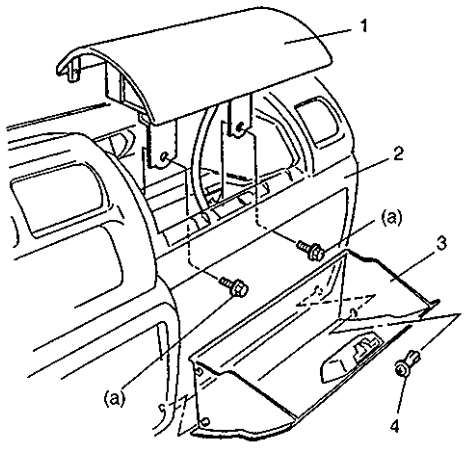

1. Passenger air bag (inflator) module
2. Instrument panel
3. Glove box
4. Glove box clip

INSTALLATION

1) Install passenger air bag (inflator) module to vehicle.
2) Tighten passenger air bag (inflator) module attaching bolts to specified torque.

   Tightening Torque
   (a): 23 N·m (2.3 kg-m, 16.5 lb-ft)

3) Connect negative battery cable to battery.
4) Enable air bag system. Refer to "Enabling Air Bag System" earlier in this section.

DRIVER AIR BAG (INFLATOR) MODULE

Refer to SECTION 3C for removal, inspection and installation.

CONTACT COIL AND COMBINATION SWITCH ASSEMBLY

Refer to SECTION 3C for removal, inspection and installation.

SEAT BELT PRETENSIONER (IF EQUIPPED)

Refer to SECTION 10A for removal, inspection and installation.

"AIR BAG" WARNING LAMP

Refer to SECTION 8 for removal and installation.

AIR BAG (INFLATOR) MODULE AND SEAT BELT PRETENSIONER DISPOSAL

WARNING:
Failure to follow proper air bag (inflator) module and seat belt pretensioner disposal procedures can result in air bag deployment and pretensioner activation which may cause personal injury.
Undeployed air bag (inflator) module/Inactivated seat belt pretensioner must not be disposed of through normal refuse channels.
The undeployed air bag (inflator) module and inactivated seat belt pretensioner contain substances that can cause severe illness or personal injury if the sealed container is damaged during disposal.

Do not dispose of the live (undeployed) air bag (inflator) modules and (inactivated) seat belt pretensioners. The method employed depends upon the final disposition of the particular vehicle, as noted in "Deployment/Activation Outside Vehicle" and "Deployment/Activation Inside Vehicle" in this section.

Deployment/Activation Outside Vehicle .... disposing of the air bag (inflator) module(s) and seat belt pretensioner(s) only (i.e., the vehicle itself will be used again).
Deployment/Activation Inside Vehicle ..... scrapping the entire vehicle including the air bag (inflator) modules and seat belt pretensioners.

WARNING:
Following precautions must be observed for this work. Failure to observe any of them may result in personal injury.
- **To avoid an accidental deployment, this work should be performed by no more than one person.**
- **The procedure should be followed strictly as described here.**
- **Be sure to read "Service Precautions" in this section beforehand.**
- **Never connect deployment harness to any power source before connecting deployment harness to the air bag (inflator) module and seat belt pretensioner. Deployment harness shall remain shorted and not be connected to a power source until the air bag is to be deployed and the pretensioner is to be activated.**
- **Since the smoke is produced when air bag is deployed and pretensioner is activated, select a well-ventilated area.**
- **The air bag (inflator) module and seat belt pretensioner will immediately deploy/activate when a power source is connected to it. Wear safety glasses throughout this entire deployment/activation and disposal procedure.**
- **Wear suitable ear protection when deploying air bag/activating pretensioner. Also, advise those who are in the area close to deployment/activation site to wear suitable ear protection.**
- **Do not deploy/activate two or more air bag system components (air bag (inflator) modules and seat belt pretensioners) at the same time.**

DEPLOYMENT/ACTIVATION OUTSIDE VEHICLE

Use this procedure when the vehicle itself is used again (only the air bag (inflator) module(s) and seat belt pretensioner(s) are disposed of).

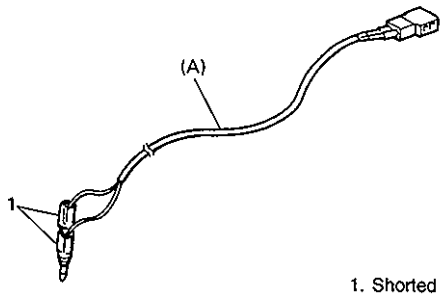

1. Shorted

1) Turn ignition switch to "LOCK", remove key and put on safety glasses.
2) Check that there is no open, short or damage in special tool (deployment harness). If any faulty is found, do not use it and be sure to use new deployment harness.

Special Tool
(A): 09932-75030

3) Short the two deployment harness leads together by fully seating one banana plug into the other.

WARNING:
Deployment harness shall remain shorted and not be connected to a power source until the air bag is to be deployed and seat belt pretensioner is to be activated.

ALWAYS CARRY AIR BAG (INFLATOR) MODULE WITH TRIM COVER (AIR BAG OPENING) AWAY FROM BODY.

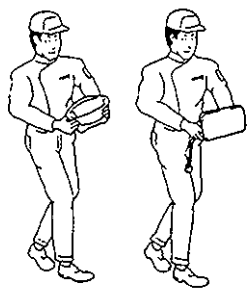

ALWAYS PLACE AIR BAG (INFLATOR) MODULE ON WORKBENCH WITH TRIM COVER (AIR BAG OPENING) UP, AWAY FROM LOOSE OBJECTS.

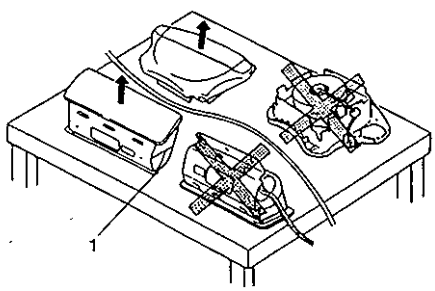

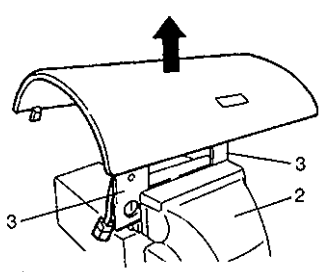

1. Slit on workbench
2. Workbench vise
3. Lower mounting bracket

4) Remove air bag (inflator) module(s) and seat belt pretensioner(s) from vehicle, referring to SECTION 3C, 10B or 10A.

WARNING:
- **Always carry live air bag (inflator) module with trim cover away from you.**
- **When storing a live air bag (inflator) module or when leaving a live air bag (inflator) module unattended on a bench or other surface, always face the bag and trim cover up and away from the surface. As the live passenger air bag (inflator) module must be placed with its bag (trim cover) facing up, place it on the workbench with a slit or use the workbench vise to hold it securely at its lower mounting bracket.**

  This is necessary so that a free space is provided to allow the air bag to expand in the unlikely event of accidental deployment.

Failure to follow procedures may result in personal injury.

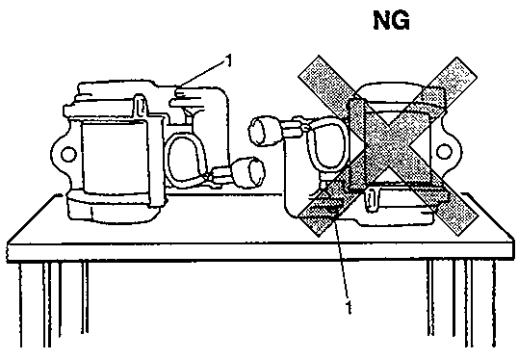

1. Exhaust hole

WARNING:

- **For handing and storage of a live seat belt pretensioner, select a place where the ambient temperature below 65°C (150°F), without high humidity and away from electric noise.**
- **Never carry the seat belt pretensioner by the wires or connector on the underside of the pretensioner.**
- **When placing a live seat belt pretensioner on the workbench or other surface, be sure not to lay it with its exhaust hole provided side facing down. It is also prohibited to put something on its face with an exhaust hole or to put 9 seat belt pretensioner on top of another.**

Otherwise, personal injury may result.

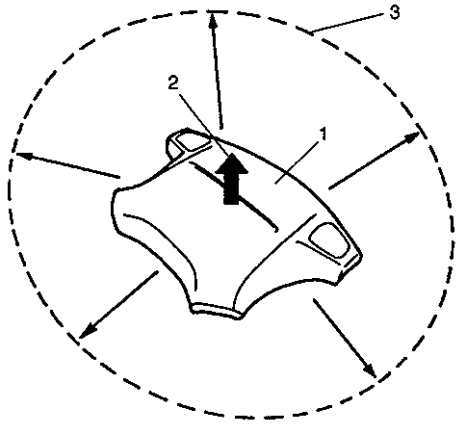

1. Driver air bag (inflator) module
2. Trim cover must face up
3. 185 cm (6 feet) of clearance

5) [In case of Driver Air Bag (Inflator) Module]
   i) Bend the bracket on the back side of the driver air bag (inflator) module fully in the direction of the arrow as shown in the figure.
   ii) Clear a space on the ground about 185 cm (6 feet) in diameter where the driver air bag (inflator) module is to be deployed. A paved, outdoor location where there is no activity is preferred. If an outdoor location is not available, a space on the shop floor where there is no activity and sufficient ventilation is recommended.
   Ensure no loose or flammable objects are within the deployment area.
   iii) Place the driver air bag (inflator) module, with its vinyl trim cover facing up, on the ground in the space just cleared.

[In case of Passenger Air Bag (Inflator) Module]

i) Clear a space on the ground about 185 cm (6 feet) in diameter where the fixture (special tool) with attached air bag (inflator) module is to be placed for deployment. A paved outdoor location where there is no activity is preferred. If an outdoor location is not available, a space on the shop floor where there is no activity and sufficient ventilation is recommended. Ensure that no loose or flammable objects are within the deployment area.

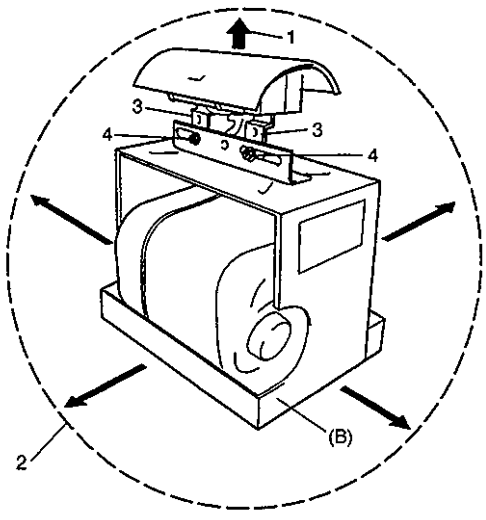

1. Trim cover must face up
2. 185 cm (6 feet) of clearance
3. Mounting attachment
4. M8 bolt and nut

ii) Place special tool (passenger air bag (inflator) module deployment fixture) on the ground in the space cleared in step i), if it has not already been placed there.

Special Tool
(B): 09932-75041 or 09932-75040 and 09932-75050

iii) Fill plastic reservoir in fixture (special tool) with water or sand. This is necessary to provide sufficient stabilization of the fixture during deployment.

iv) Attach the passenger air bag (inflator) module in the fixture (special tool) using mounting attachment, hold-down bolts and nuts and M8 bolts and nuts.

> **CAUTION:**
> **Be sure to use the following bolt and nut for fixing passenger air bag (inflator) module to mounting attachment. Size: M8, Strength: 7T**

Securely hand-tighten all fastener prior to deployment.

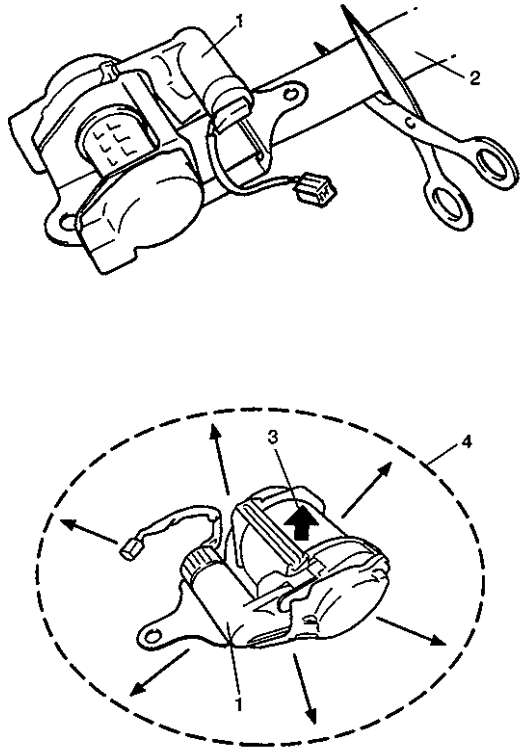

1. Seat belt pretensioner (retractor assembly)
2. Webbing
3. Exhaust hole provided side face up
4. 185 cm (6 feet) of clearance

[In case of seat belt pretensioner]

i) Pull out the webbing fully as shown in the figure and cut it at the root of the pretensioner (retractor assembly) as shown in the figure.

> **WARNING:**
> **As the drum of the retractor assembly turns very quickly as soon as the webbing is cut, fix the retractor assembly with a vise on the workbench and keep your hands and fingers away from it when cutting the webbing.**

ii) Clear a space on the ground about 185 cm (6 feet) in diameter where the seat belt pretensioner is to be activated. A paved, outdoor location where there is no activity is preferred. If an outdoor location is not available, a space on the shop floor where there is no activity and sufficient ventilation is recommended.
Ensure no loose or flammable objects are within the activation area.

iii) Place the seat belt pretensioner as shown in the figure on the ground in the space just cleared.

For Driver Air Bag (Inflator) Module

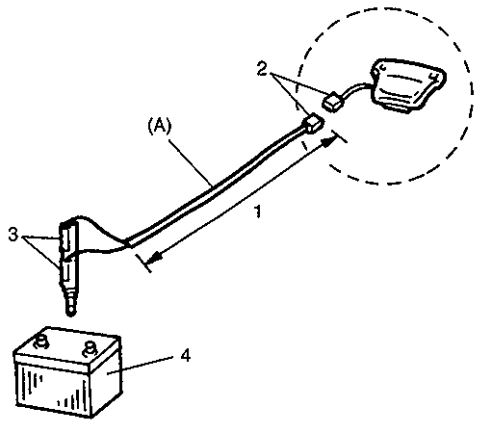

For Passenger Air Bag (Inflator) Module

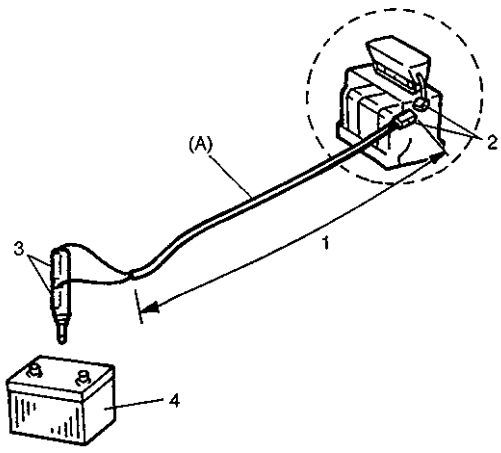

For Seat Belt Pretensioner

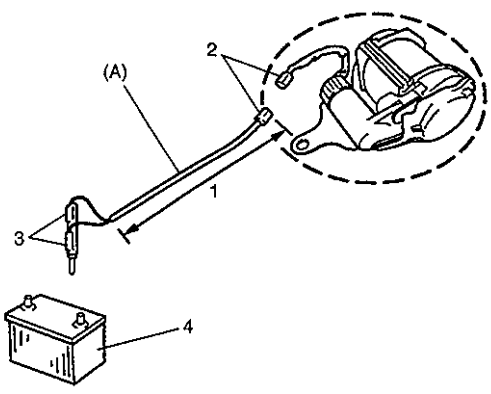

1. Stretch deployment harness to full length 10 m (33 ft).
2. Connect connectors.
3. Power source (12V vehicle battery).
4. Short the two deployment harness leads.

6) Stretch the deployment harness from the driver or passenger air bag (inflator) module to its full length 10 m (33 ft).

Special Tool
(A): 09932-75030

7) Place a power source near the shorted end of the deployment harness. Recommended application: 12 Volts minimum, 2 amps minimum. A vehicle battery is suggested.
8) Verify that the area around the driver or passenger air bag (inflator) module is clear of all people and loose or flammable objects.
9) [In case of Driver Air Bag (Inflater) Module]
Verify that the driver air bag (inflator) module is resting with its vinyl trim cover facing up.

[In case of Passenger Air Bag (Inflator) Module]
Verify that the passenger air bag (inflator) module is firmly and properly secured in passenger air bag (inflator) module deployment fixture (special tool).
[In case of Seat Belt Pretensioner]
Verify that the seat belt pretensioner, with its warning label attached side facing up as shown in the figure on the ground in the space just cleared.
10) Connect the air bag (inflator) module or seat belt pretensioner to the deployment harness connector and lock connector with lock lever.
11) Notify all people in the immediate area that you intend to deploy/activate the air bag (inflator) module or seat belt Pretensioner.

NOTE:

- **When the air bag deploys and the pretensioner activates, the rapid gas expansion will create a substantial report. Wear suitable ear protection. Notify all people in the immediate area that you intend to deploy the air bag (inflator) module or to activate the seat belt pretensioner and suitable ear protection should be worn.**
- **When the air bag deploys and the pretensioner activates, air bag (inflator) module and pretensioner (retractor assembly) may jump about 30 cm (1 ft) vertically. This is a normal reaction of them to the force of the rapid gas expansion inside the air bag and pretensioner.**
- **After the air bag (inflator) module has been deployed, the surface of the air bag may contain a powdery residue. This powder consists primarily of cornstarch (used to lubricate the bag as it inflates) and byproducts of the chemical reaction.**

WARNING:

- **After deployment/activation, the metal surfaces of the air bag (inflator) module and the seat belt pretensioner will be very hot. Do not touch the metal areas of them for about 30 minutes after deployment/activation.**
- **Do not place the deployed air bag (inflator) module and the activated seat belt pretensioner near any flammable objects.**
- **Do not apply water, oil, etc. to deployed air bag (inflator) module and activated seat belt pretensioner.**
- **If the deployed air bag (inflator) module and the activated seat belt pretensioner must be moved before it is cool, wear gloves and handle it by using nonmetal material such as the air bag, webbing and vinyl trim.**

Failure to follow procedures may result in fire or personal injury.

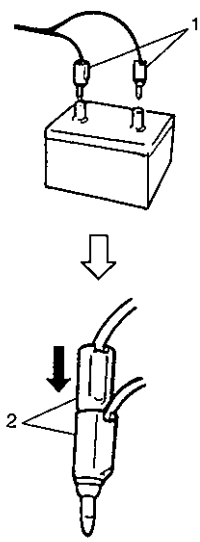

1. Connect one banana plug to positive terminal of power source (12V vehicle battery) and then the other to negative terminal to immediately deploy.
2. Short to two deployment harness leads.

12) Separate the two banana plugs on the deployment harness.
13) Connect the deployment harness to the power source (12V vehicle battery) to immediately deploy/activate the air bag or seat belt pretensioner.
14) Disconnect the deployment harness from power source (12V vehicle battery) and short the two deployment harness leads together by fully seating one banana plug into the other.
15) In the unlikely event that the air bag (inflator) module or seat belt pretensioner did not deploy/activate after following these procedures, proceed immediately with Steps 20) through 23). If the air bag (inflator) module or the seat belt pretensioner did deploy/activate, proceed with Steps 16) through 19).

16) Put on a pair of shop gloves to protect your hands from possible irritation and heat when handling the deployed air bag (inflator) module and the activated seat belt pretensioner.
17) Disconnect the deployment harness from the air bag (inflator) module and the seat belt pretensioner as soon after deployment/activation as possible.
    This will prevent damage to the deployment harness due to possible contact with the hot air bag (inflator) module and seat belt pretentioner. The deployment harness are designed to be reused. They should, however, be inspected for damage after each deployment/activation and replaced if necessary.

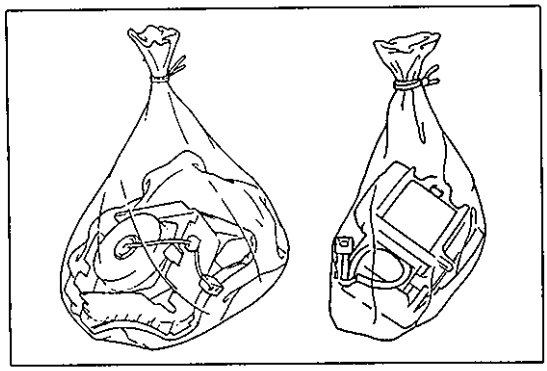

18) Dispose of the deployed air bag (inflator) module and the activated seat belt pretensioner through normal refuse channels after it has cooled for at least 30 minutes and tightly seal the air bag (inflator) module and the seat belt pretensioner in a strong vinyl bag. (Refer to "Deployed Air Bag (Inflator) Module and Activated Seat Belt Pretensioner Disposal" in detail.)
19) Wash your hands with mild soap and water afterward.

NOTE:
The remaining steps are to be followed in the unlikely event that the air bag (inflator) module did not deploy or the seat belt pretensioner did not activate after following these procedures.

20) Ensure that the deployment harness has been disconnected from the power source and that its two banana plugs have been shorted together by fully seating one banana plug into the other.
21) Disconnect the deployment harness from the air bag (inflator) module and the seat belt pretensioner.
22) [For air bag (inflator) module]
    Temporarily store the air bag (inflator) module with its vinyl trim cover facing up, away from the surface upon which it rests. Refer to "Service Precautions" in this section for details.
    [For seat belt pretensioner]
    When temporarily strong the seat belt pretensioner, be sure NOT to face its exhaust hole provided side down. It must face up. Refer to "Service Precautions" in this section for details.
23) Contact your local distributor for further assistance.

For Driver Air Bag (Inflator) Module

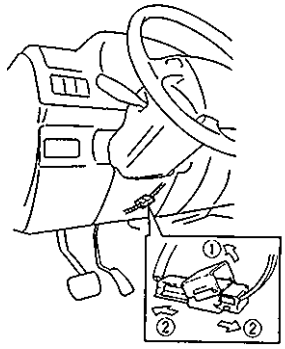

For Passenger Air Bag (Inflator) Module

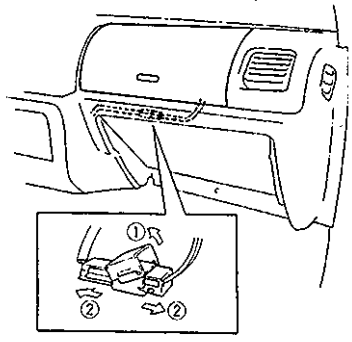

For Seat Belt Pretensioner

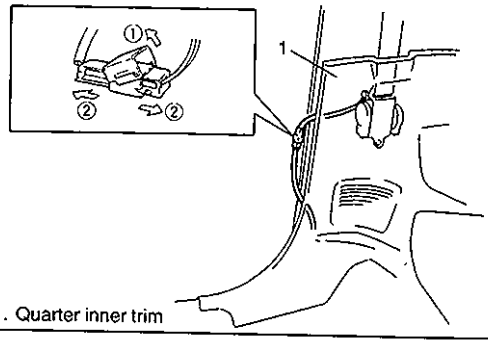

1. Quarter inner trim

DEPLOYMENT/ACTIVATION INSIDE VEHICLE

Use this procedure when scrapping the entire vehicle including the air bag (inflator) modules and seat belt pretensioners.

CAUTION:
When vehicle itself will be used again, deploy/activate the air bag and pretensioner outside vehicle according to "Deployment/Activation Outside Vehicle", for deploying/activating it inside will cause the instrument panel, glove box and their vicinity to be deformed.
Failure to observe this CAUTION may require unneeded vehicle inspection and repair.

1) Turn ignition switch to "LOCK", remove key and put on safety glasses.
2) Remove all loose objects from front seats and instrument panel.
3) [For driver air bag (inflator) module]
   Disconnect contact coil connector (Yellow connector) located near the base of the steering column.
   [For passenger air bag (inflator) module]
   Remove glove box from instrument panel and disconnect passenger air bag (inflator) module connector (Yellow connector).
   [For seat belt pretensioner]
   Remove both side (driver and passenger side) quarter inner trim and disconnect seat belt pretensioner (Yellow) connectors.
4) Confirm that each air bag (inflator) module is securely mounted.

For Driver Air Bag (inflator) Module

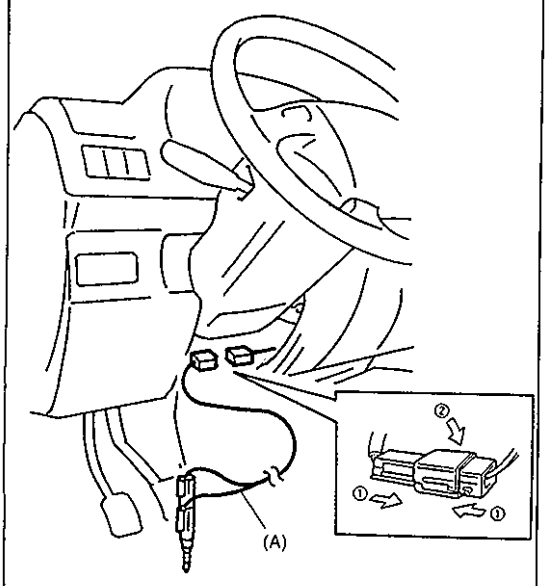

1. Short deployment harness leads.

5) Check that there is no open, short or damage in special tool (deployment harness). If any faulty condition is found, do not use it and be sure to use new deployment harness.

   Special Tool
   (A): 09932-75030

6) Short the two deployment harness leads together by fully seating one banana plug into the other.

WARNING:
Deployment harness shall remain shorted and not be connected to a power source until the air bag is to be deployed and seat belt pretensioner is to be activated.

7) Connect deployment harness connector to air bag (inflator) module (driver or passenger) or seat belt pretensioner (driver or passenger) and lock connector with lock lever.

Driver side for left hand steering vehicle

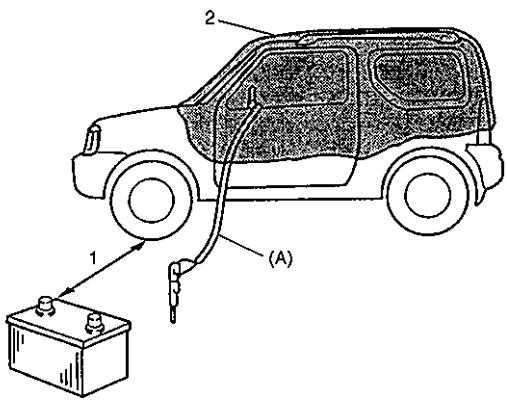

Driver side for right hand steering vehicle

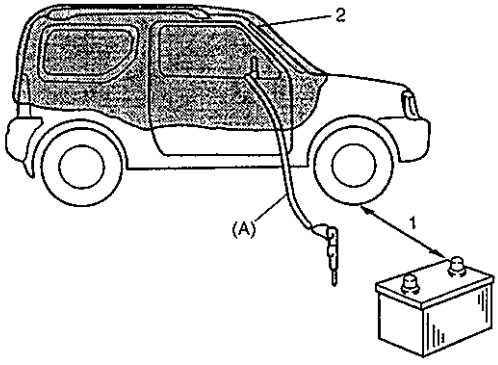

1. Stretch deployment harness to its full length 10 m (33 ft)
2. Drop cloth, blanket or similar item.

8) Route deployment harness out the vehicle.
9) Verify that the inside of the vehicle and the area surrounding the vehicle are clear of all people and loose or flammable objects.
10) Stretch the deployment harness to its full length 10 m (33 ft).

Special Tool
(A): 09932-75030

11) Place a power source near the shorted end of the deployment harness. Recommended application: 12 Volts minimum, 2 amps minimum. A vehicle battery is suggested.
12) Completely cover windshield area and front door window openings with a drop cloth, blanket to similar item. This reduces the possibility of injury due to possible fragmentation of the vehicle's glass or interior.
13) Notify all people in the immediate area that you intend to deploy the air bag (inflator) module or activate the seat belt pretensioner.

NOTE:

- **When the air bag deploys and the pretensioner activates, the rapid gas expansion will create a substantial report. Wear suitable ear protection. Notify all people in the immediate area that you intend to deploy the air bag (inflator) module or to activate the seat belt pretensioner and suitable ear protection should be worn.**
- **After the air bag (inflator) module has been deployed, the surface of the air bag may contain a powdery residue. This powder consists primarily of cornstarch (used to lubricate the bag as it inflates) and byproducts of the chemical reaction.**

WARNING:

- **After deployment/activation, the metal surfaces of the air bag (inflator) module and the seat belt pretensioner will be very hot. Do not touch the metal areas of them for about 30 minutes after deployment/activation.**
- **Do not place the deployed air bag (inflator) module and the activated seat belt pretensioner near any flammable objects.**
- **Do not apply water, oil, etc. to deployed air bag (inflator) module and activated seat belt pretensioner.**
- **If the deployed air bag (inflator) module and the activated seat belt pretensioner must be moved before it is cool, wear gloves and handle it by using nonmetal material such as the air bag, webbing and vinyl trim.**

Failure to follow procedures may result in fire or personal injury.

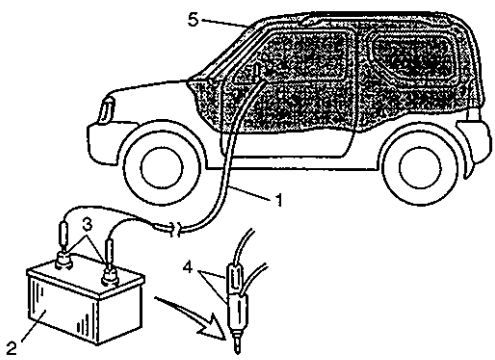

1. Stretch it to full length 10m (33 ft)
2. Power source (12V vehicle battery)
3. Connect one banana plug to positive terminal of power source (12V vehicle battery) and then the other to negative terminal to immediately deploy.
4. Short harness leads after deployment.
5. Drop cloth, blanket or similar them.

14) Separate the two banana plugs on the deployment harness.
15) Connect the deployment harness to the power source (12 V vehicle battery) to immediately deploy/activate the air bag or the pretensioner.
16) Disconnect the deployment harness from the power source (12 V vehicle battery) and short the two deployment harness leads together by fully seating one banana plug into the other.
17) Put on a pair of shop gloves to protect your hands from possible irritation and heat when handling the deployed air bag (inflator) module and the activated seat belt pretensioner.
18) Disconnect the deployment harness from the air bag (inflator) module and the seat belt pretensioner as soon after deployment/activation as possible.
    This will prevent damage to the deployment harness due to possible contact with the hot air bag (inflator) module and seat belt pretensioner. The deployment harness are designed to be reused. They should, however, be inspected for damage after each deployment/activation and replaced if necessary.
19) Carefully remove drop cloth from vehicle and clean off any fragments or discard drop cloth entirely.
20) Repeat Steps 2) through 19) to deploy/activate air bag (inflator) modules and seat belt pretensioners which has not been deployed/activated, if any.
21) In the unlikely event that the air bag (inflator) module and the seat belt pretensioner proceed immediately with Steps 23) through 25). If the air bag (inflator) module and the seat belt pretensioner did deploy/activate, proceed with Steps 22).

22) With air bags deployed and pretensioners activated the vehicle may be scrapped in the same manner as a non-air bag system equipped vehicle.

23) Remove the undeployed air bag (inflator) module(s) and the inactivated seat belt pretensioner(s) from the vehicle. For driver air bag (inflator) module refer to SECTION 3C, for passenger air bag (inflator) module refer to "On-Vehicle Service" in this section, for seat belt pretensioner refer to SECTION 10A.
24) [For air bag (inflator) module]
    Temporarily store the air bag (inflator) module with its vinyl trim cover facing up, away from the surface upon which it rests. Refer to "Service Precautions" in this section for details.
    [For seat belt pretensioner]
    When temporarily strong the seat belt pretensioner, be sure NOT to face its exhaust hole provided side down. It must face up. Refer to "Service Precautions" in this section for details.
25) Contact your local distributor for further assistance.

DEPLOYED AIR BAG (INFLATOR) MODULE AND ACTIVATED SEAT BELT PRETENSIONER DISPOSAL

WARNING:
Failure to follow proper air bag (inflator) module and seat belt pretensioner disposal procedures can result in air bag deployment and pretensioner activation which may cause personal injury. The undeployed air bag (inflator) module and the inactivated seat belt pretensioner must not be disposed of through normal refuse channels. The undeployed air bag (inflator) module and the inactivated seat belt pretensioner contains substances that can cause severe illness or personal injury if the sealed container is damaged during disposal.

Deployed air bag (inflator) module and the activated seat belt pretensioner can be disposed of through normal refuse channels just like any other parts. For their disposal, however, following points should be noted.

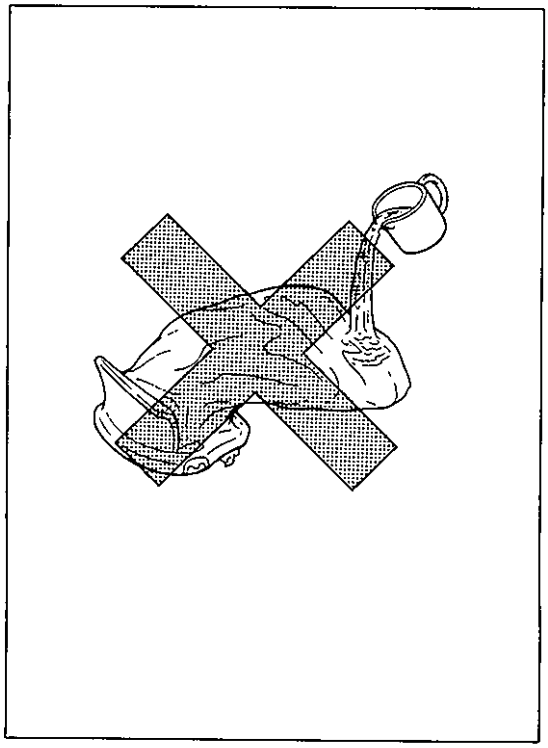

- The air bag (inflator) module and the seat belt pretensioner immediately after deployment/activation is very hot. Wait for 30 minutes to cool it off before handling them.
- Never apply water, oil, etc. to deployed air bag (inflator) module and the activated seat belt pretensioner to cool it off and be careful so that water, oil etc. does not get on the deployed air bag (inflator) module and the activated seat belt pretensioner.
- After the air bag (inflator) module has been deployed, the surface of the air bag may contain a powdery residue. This powder consists primarily of cornstarch (used to lubricate the bag as it inflates) and byproducts of the chemical reaction. As with many service procedures, you should wear gloves and safety glasses.

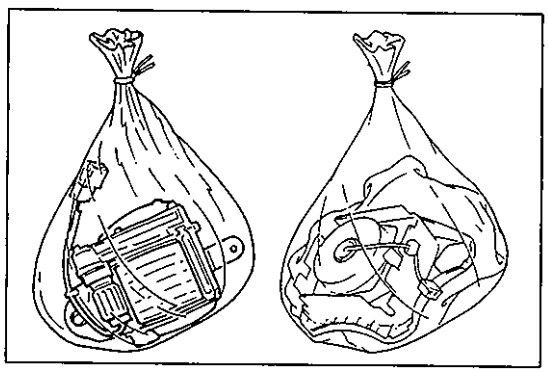

- When disposing of the deployed air bag (inflator) module and the activated seat belt pretensioner, be sure to seal it in a vinyl bag.
- When air bag (inflator) module and seat belt pretensioner have been deployed/activated inside the vehicle which is going to be scrapped, leave them as installed to the vehicle.
- Be sure to wash your hands with mild soap and water after handling it.

TIGHTENING TORQUE SPECIFICATIONS

Fastening parts	Tightening torque		
	N·m	kg-m	lb-ft
SDM bolt	6	0.6	4.5
Passenger air bag (inflator) module bolt	23	2.3	16.5
Driver air bag (inflator) module bolt	Refer to SECTION 3C.		
Seat belt pretensioner (retractor assembly) bolt and screw	Refer to SECTION 10A.		

SPECIAL TOOLS

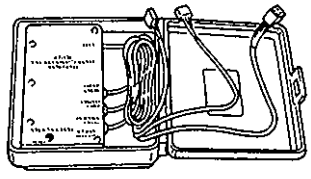

09932-75010
Air bag driver/passenger load tool

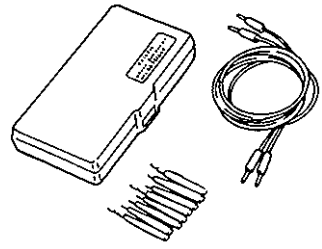

09932-76010
Connector test adapter kit

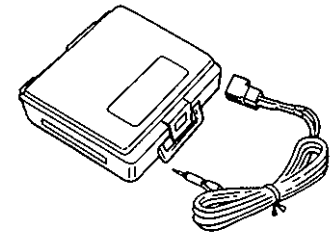

09932-75030
Air bag deployment harness

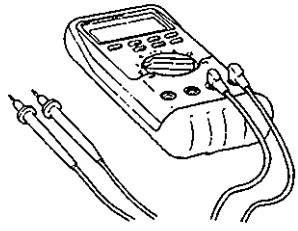

Digital multimeter for which the maximum test current is 10 mA or less at the minimum range of resistance measurement.

WARNING:
Be sure to use the specified digital multimeter. Otherwise, air bag deployment or personal injury may result.

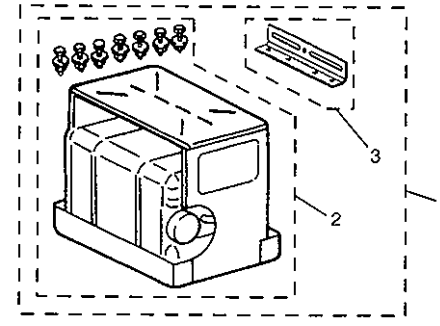

1. 09932-75041 (PAB deployment fixture)
   or
2. 09932-75040 (PAB deployment fixture) and
3. 09932-75050 (PAB deployment fixture bracket)
   PAB : Passenger air bag (inflator) module

Prepared by

SUZUKI MOTOR CORPORATION

Overseas Service Department

1st Ed. June, 1998
2nd Ed. Oct., 1998
3rd Ed. Jan., 2002
Printed in Japan

Printing: Jan., 2002 897