IMPORTANT

WARNING/CAUTION/NOTE

Please read this manual and follow its instructions carefully. To emphasize special information, the words **WARNING**, **CAUTION** and **NOTE** have special meanings. Pay special attention to the messages highlighted by these signal words.

WARNING:
Indicates a potential hazard that could result in death or injury.

CAUTION:
Indicates a potential hazard that could result in vehicle damage.

NOTE:
Indicates special information to make maintenance easier or instructions clearer.

WARNING:
This service manual is intended for authorized SUZUKI dealers and qualified service mechanics only. Inexperienced mechanics or mechanics without the proper tools and equipment may not be able to properly perform the services described in this manual. Improper repair may result in injury to the mechanic and may render the vehicle unsafe for the driver and passengers.

WARNING:
For vehicles equipped with Supplemental Restraint (Air Bag) System:

- **Service on or around the air bag system components must be performed only by an authorized SUZUKI dealer. Please observe all WARNINGS, CAUTIONS and "Service Precautions" under "On-Vehicle Service" in SECTION 10B before performing service on or around the air bag system components or wiring. Failure to follow WARNINGS could result in unintentional activation of the system or could render the system inoperative. Either of these two conditions may result in severe injury.**
- **If the air bag system and another vehicle system both need repair, SUZUKI recommends that the air bag system be repaired first, to help avoid unintentional activation of the air bag system.**
- **Do not modify the steering wheel, instrument panel or any other air bag system component. Modifications can adversely affect air bag system performance and lead to injury.**
- **If the vehicle will be exposed to temperatures over 93°C (200°F) (for example, during a paint baking process), remove the air bag system components (air bag (inflator) modules, SDM and seat belt pretensioner (if equipped)) beforehand to avoid component damage or unintended activation of the system.**

FOREWORD

This SUPPLEMENTARY SERVICE MANUAL is a supplement to SN413 SERVICE MANUAL. It has been prepared exclusively for the following applicable model.

Applicable model: SN413 of and after the vehicle identification numbers below.

JSAFJA43V00100001	~	JSAFJA43V00140000
JSAFJB43V00100001	~	JSAFJB43V00140000
JSAFJB43V10100001	~	
JSAFJB43V14100001	~	
JSAFJB43V20100001	~	
JSAFJB43V24100001	~	
JSAFJB43VW0100001	~	
JS3JB43V□14100001	~	
JS3JB43V□24100001	~	JS3JB43V□24140000
JB43W-100001	~	

It describes only different service information of the above applicable model as compared with SN413 SERVICE MANUAL.
Therefore, whenever servicing the above applicable model, consult this supplement first.
And for any section, item or description not found in this supplement, refer to the related manuals mentioned in the next page.

When replacing parts or servicing by disassembling, it is recommended to use SUZUKI genuine parts, tools and service materials (lubricant, sealants, etc.) as specified in each description.

All information, illustrations and specifications contained in this literature are based on the latest product information available at the time of publication approval, And used as the main subject of description is the vehicle of standard specifications among others. Therefore, note that illustrations may differ from the vehicle being actually serviced.
The right is reserved to make changes at any time without notice.

SUZUKI MOTOR CORPORATION
OVERSEAS SERVICE DEPARTMENT

© COPYRIGHT SUZUKI MOTOR CORPORATION 2000

RELATED MANUAL

MANUAL NAME	MANUAL NO.	APPLICABILITY
SN413 SERVICE MANUAL	99500-81A00-XXX	This manual is the base manual for this supplementary service manual.
SN413 WIRING DIAGRAM MANUAL	99512-81A10-015	Applicable model mentioned in FORE-WORD of this supplementary service manual
AIR CONDITIONING BASIC MANUAL	99520-02130-XXX	Vehicle equipped with air conditioning

TABLE OF CONTENTS		SECTION
GENERAL INFORMATION	General Information	**0A**
	Maintenance and Lubrication	**0B**
HEATING AND AIR CONDITIONING	Heater and Ventilation	**1A**
	Air Conditioning	**1B**
STEERING, SUSPENSION, WHEELS AND TIRES	Steering, Suspension, Wheels and Tires	**3**
	Front End Alignment	**3A**
	Steering Gear Box and Linkage	**3B**
	Power Steering (P/S) System	**3B1**
	Steering Wheel and Column	**3C**
	Front Suspension	**3D**
	Rear Suspension	**3E**
	Wheel and Tires	**3F**
DRIVE SHAFTS AND PROPELLER SHAFT	Propeller Shafts	**4B**
BRAKE SYSTEM	Brakes	**5**
	Anti-lock Brake System (ABS)	**5E**
ENGINE	Engine	**6**
	Engine Mechanical	**6A1**
	Engine Cooling	**6B**
	Engine Fuel	**6C**
	Engine and Emission Control System	**6E**
	Ignition System	**6F**
	Cranking System	**6G**
	Charging System	**6H**
	Exhaust System	**6K**
TRANSMISSION, CLUTCH AND DIFFERENTIAL	Manual Transmission	**7A**
	Automatic Transmission (4 A/T)	**7B**
	Clutch	**7C**
	Transfer	**7D**
	Differential (Front and Rear)	**7E**
ELECTRICAL SYSTEM	Electrical System	**8**
	Immobilizer Control System	**8G**
BODY SERVICE		**9**
RESTRAINT SYSTEM	Restraint System	**10**
	Seat Belt	**10A**
	Air Bag System	**10B**

NOTE:
For the screen toned sections in the above table, refer to the same sections of Service Manual mentioned in FOREWORD of this manual.

SECTION 0A

GENERAL INFORMATION

NOTE:
For the descriptions (items) not found in this section, refer to the same section of the Service Manual mentioned in FOREWORD of this manual.

CONTENTS

IDENTIFICATION INFORMATION 0A- 2
Vehicle Identification Number 0A- 2
Engine Identification Number 0A- 2
Transmission Identification Number 0A- 2
FASTENERS INFORMATION 0A- 3
Metric Fasteners 0A- 3
Fasteners Strength Identification 0A- 3
Standard Tightening Torque 0A- 4

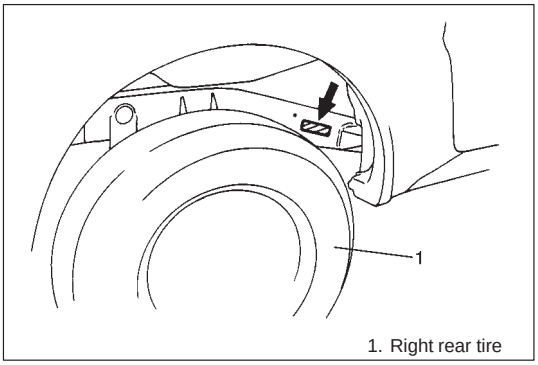

1. Right rear tire

IDENTIFICATION INFORMATION

VEHICLE IDENTIFICATION NUMBER

The vehicle identification number is punched on the chassis inside the tire housing on the right rear side.

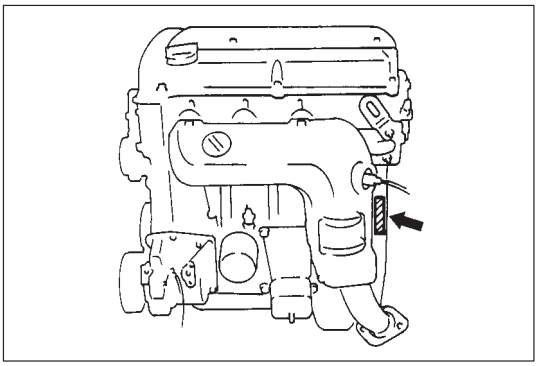

ENGINE IDENTIFICATION NUMBER

The number is punched on the cylinder block.

A/T

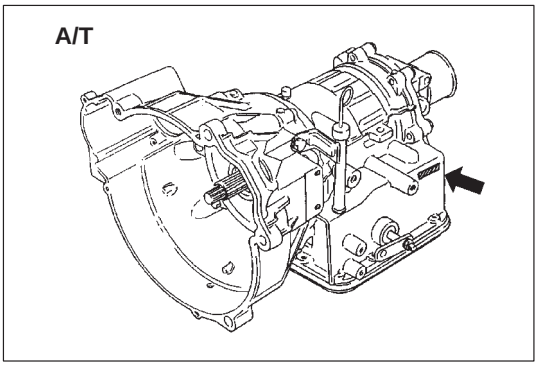

TRANSMISSION IDENTIFICATION NUMBER

The number is located on the transmission case.

FASTENERS INFORMATION

METRIC FASTENERS

Most of the fasteners used for this vehicle are metric fasteners. When replacing any fasteners, it is most important that replacement fasteners be the correct diameter, thread pitch and strength.

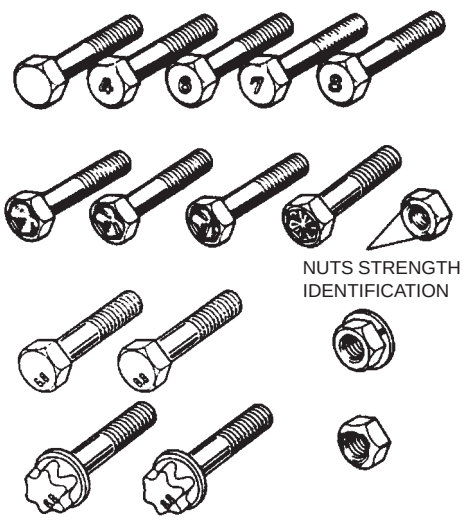

METRIC BOLTS-IDENTIFICATION CLASS NUMBERS OR MARKS CORRESPOND TO BOLT STRENGTH-INCREASING NUMBERS REPRESENT INCREASING STRENGTH.

FASTENER STRENGTH IDENTIFICATION

Most commonly used metric fastener strength property classes are 4T, 6.8, 7T, 8.8 and radial line with the class identification embossed on the head of each bolt. Some metric nuts will be marked with punch, 6 or 8 mark strength identification on the nut face. Figure shows the different strength markings.

When replacing metric fasteners, be careful to use bolts and nuts of the same strength or greater than the original fasteners (the same number marking or higher). It is likewise important to select replacement fasteners of the correct diameter and thread pitch. Correct replacement bolts and nuts are available through the parts division.

STANDARD TIGHTENING TORQUE

Each fastener should be tightened to the torque specified in each section of this manual. If no description or specification is provided, refer to the following tightening torque chart for the applicable torque for each fastener. When a fastener of greater strength than the original one is used, however, use the torque specified for the original fastener.

NOTE:

- **For the flanged bolt, flanged nut and self-lock nut of 4T and 7T strength, add 10% to the tightening torque given in the chart below.**
- **The chart below is applicable only where the fastened parts are made of steel or light alloy.**

Tightening torque chart

Strength \ Thread Diameter (Nominal Diameter) (mm)		4	5	6	8	10	12	14	16	18
An equivalent of 4T strength fastener 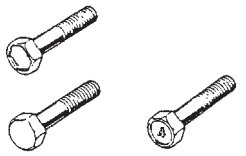	N·m	1.5	3.0	5.5	13	29	45	65	105	160
	kg-m	0.15	0.30	0.55	1.3	2.9	4.5	6.5	10.5	16
	lb-ft	1.0	2.5	4.0	9.5	21.0	32.5	47.0	76.0	116.0
An equivalent of 6.8 strength fastener without flange 	N·m	2.4	4.7	8.4	20	42	80	125	193	280
	kg-m	0.24	0.47	0.84	2.0	4.2	8.0	12.5	19.3	28
	lb-ft	2.0	3.5	6.0	14.5	30.5	58.0	90.5	139.5	202.5
An equivalent of 6.8 strength fastener without flange 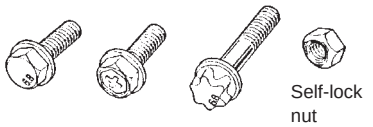 Self-lock nut	N·m	2.4	4.9	8.8	21	44	84	133	203	298
	kg-m	0.24	0.49	0.88	2.1	4.4	8.4	13.3	20.3	29.8
	lb-ft	2.0	3.5	6.5	15.5	32.0	61.0	96.5	147.0	215.5
An equivalent of 7T strength fastener 	N·m	2.3	4.5	10	23	50	85	135	210	240
	kg-m	0.23	0.45	1.0	2.3	5.0	8.5	13.5	21	24
	lb-ft	2.0	3.5	7.5	17.0	36.5	61.5	98.0	152.0	174.0
An equivalent of 8.8 strength fastener without flange 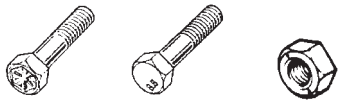	N·m	3.1	6.3	11	27	56	105	168	258	373
	kg-m	0.31	0.63	1.1	2.7	5.6	10.5	16.8	25.8	37.3
	lb-ft	2.5	4.5	8.0	19.5	40.5	76.0	121.5	187.0	270.0
An equivalent of 8.8 strength fastener without flange 	N·m	3.2	6.5	12	29	59	113	175	270	395
	kg-m	0.32	0.65	1.2	2.9	5.9	11.3	17.5	27	39.5
	lb-ft	2.5	5.0	9.0	21.0	43.0	82.0	126.5	195.5	286.0

SECTION 0B

MAINTENANCE AND LUBRICATION

WARNING:
For vehicles equipped with Supplemental Restraint (Air Bag) System:

- **Service on and around the air bag system components or wiring must be performed only by an authorized SUZUKI dealer. Refer to "Air Bag System Components and Wiring Location View" under "General Description" in air bag system section in order to confirm whether you are performing service on or near the air bag system components or wiring. Please observe all WARNINGS and "Service Precautions" under "On-Vehicle Service" in air bag system section before performing service on or around the air bag system components or wiring. Failure to follow WARNINGS could result in unintentional activation of the system or could render the system inoperative. Either of these two conditions may result in severe injury.**
- **Technical service work must be started at least 90 seconds after the ignition switch is turned to the "LOCK" position and the negative cable is disconnected from the battery. Otherwise, the system may be activated by reserve energy in the Sensing and Diagnostic Module (SDM).**

CONTENTS

MAINTENANCE SCHEDULE 0B- 2
MAINTENANCE SERVICE 0B- 5
Engine 0B- 5
Ignition System 0B-10
Fuel System 0B-10
Emission Control System 0B-11
Chassis and Body 0B-12
Final Inspection 0B-22
RECOMMENDED FLUIDS AND LUBRICANTS 0B-23

MAINTENANCE SCHEDULE

MAINTENANCE SCHEDULE UNDER NORMAL DRIVING CONDITIONS

Interval: This interval should be judged by odometer reading or months, whichever comes first.	This table includes services as scheduled up to 90,000 km (54,000 miles) mileage. Beyond 90,000 km (54,000 miles), carry out the same services at the same intervals respectively.							
	Km (x 1,000)			15	30	45	60	75	90
	Miles (x 1,000)			9	18	27	36	45	54
	Months			12	24	36	48	60	72
ENGINE									
1-1. Drive belt	V-belt			I	R	I	R	I	R
	V-rib belt (Flat type)			–	–	I	–	–	R
1-2. Valve lash (clearance)				–	I	–	I	–	I
1-3. Engine oil and oil filter				R	R	R	R	R	R
1-4. Engine coolant				–	–	R	–	–	R
1-5. Exhaust system				–	I	–	I	–	I
IGNITION SYSTEM									
2-1. Spark plugs	When unleaded fuel is used	Vehicle without HO2S	Nickel spark plug	–	R	–	R	–	R
			Iridium spark plug	–	–	R	–	–	R
		Vehicle with HO2S	Nickel spark plug	–	–	R	–	–	R
			Iridium spark plug	–	–	–	R	–	–
	When leaded fuel is used, refer to “Severe Driving Condition” schedule.								
FUEL SYSTEM									
3-1. Air cleaner filter				I	I	R	I	I	R
3-2. Fuel lines and connections				–	I	–	I	–	I
3-3. Fuel filter				Replace every 210,000 km or 126,000 miles					
3-4. Fuel tank				–	–	I	–	–	I
EMISSION CONTROL SYSTEM									
4-1. Crankcase ventilation hoses and connections (Vehicle without HO2S)				–	–	I	–	–	I
4-2. PCV valve	Vehicle without HO2S			–	–	I	–	–	I
	Vehicle with HO2S			–	–	–	–	–	I
4-3. Fuel evaporative emission control system	Vehicle without HO2S			–	I	–	I	–	I
	Vehicle with HO2S			–	–	–	–	–	I

NOTES:

“R”: Replace or change

“I”: Inspect and correct, replace or lubricate if necessary

- **For Sweden, Item 2-1, 4-2 and 4-3 should be performed by odometer reading only.**
- **For item 2-1. Spark plugs, replace every 50,000 km if the local law requires.**
- **Nickel spark plug: BKR6E-11 (NGK) or K20PR-U11 (DENSO)**
- **Iridium spark plug: IFR5E11 (NGK) or SK16PR-A11 (DENSO)**

Interval: This interval should be judged by odometer reading or months, whichever comes first.	This table includes services as scheduled up to 90,000 km (54,000 miles) mileage. Beyond 90,000 km (54,000 miles), carry out the same services at the same intervals respectively.						
	Km (x 1,000)	15	30	45	60	75	90
	Miles (x 1,000)	9	18	27	36	45	54
	Months	12	24	36	48	60	72
CHASSIS AND BODY							
6- 1. Clutch (pedal height and travel)		–	I	–	I	–	I
6- 2. Brake discs and pads (thickness, wear, damage)		I	I	I	I	I	I
Brake drums and shoes (wear, damage)		–	I	–	I	–	I
6- 3. Brake hoses and pipes (leakage, damage, clamp)		–	I	–	I	–	I
6- 4. Brake fluid		–	R	–	R	–	R
6- 5. Brake lever and cable (damage, stroke, operation)		Inspect at first 15,000 km (9,000 miles) only.					
6- 6. Tires (wear, damage, rotation)		I	I	I	I	I	I
6- 7. Wheel discs (damage)		I	I	I	I	I	I
6- 8. Suspension system (tightness, damage, rattle, breakage)		–	I	–	I	–	I
6- 9. Propeller shafts		–	–	I	–	–	I
6-10. Manual transmission oil (leakage, level) (I: 1st 15,000 km only)		I	–	R	–	–	R
6-11. Automatic transmission	Fluid level	–	I	–	I	–	I
	Fluid change	Replace every 165,000 km (99,000 miles).					
	Fluid hose	–	–	–	R	–	–
6-12. Transfer oil (leakage, level)		I	–	I	–	I	–
6-13. Differential oil (leakage, level) (R: 1st 15,000 km only)		R or I	–	I	–	I	–
6-14. Steering system (tightness, damage, breakage, rattle)		–	I	–	I	–	I
6-15. Power steering (if equipped)		I	I	I	I	I	I
6-16. All latches, hinges and locks		–	I	–	I	–	I

NOTES:

“R”: Replace or change

“I”: Inspect and correct, replace or lubricate if necessary

MAINTENANCE RECOMMENDED UNDER SEVERE DRIVING CONDITIONS

If the vehicle is usually used under the conditions corresponding to any severe condition code given below, it is recommended that applicable maintenance operation be performed at the particular interval as given in the chart below.

Severe condition code

A – Repeated short trips
B – Driving on rough and/or muddy roads
C – Driving on dusty roads
D – Driving in extremely cold weather and/or salted roads
E – Repeated short trips in extremely cold weather
F – Leaded fuel use
G – – – – – – – – –
H – Trailer towing (if admitted)

Severe Condition Code	Maintenance		Maintenance Operation	Maintenance Interval
— B C D — — — —	ITEM 1-1 Drive belt (V-rib belt)		I	Every 15,000 km (9,000 miles) or 12 months
			R	Every 45,000 km (27,000 miles) or 36 months
A — C D E F — H	ITEM 1-3 Engine oil and oil filter		R	Every 5,000 km (3,000 miles) or 4 months
— B — — — — — —	ITEM 1-5 Exhaust pipe mountings		I	Every 15,000 km (9,000 miles) or 12 months
— — C — — — — —	ITEM 3-1 Air cleaner filter *1		I	Every 2,500 km (1,500 miles)
			R	Every 30,000 km (18,000 miles) or 24 months
A B C — E F — H	ITEM 2-1 Spark plugs	Nickel spark plug	R	Every 10,000 km (6,000 miles) or 8 months
		Iridium spark plug	R	Every 30,000 km (18,000 miles) or 24 months
— B C D — — — H	ITEM 6-7 Wheel bearing		I	Every 15,000 km (9,000 miles) or 12 months
— B — — — — — —	ITEM 6-8 Suspension bolts and nuts		T	Every 15,000 km (9,000 miles) or 12 months
— B — D E — — H	ITEM 6-9 Propeller shafts		I	Every 15,000 km (9,000 miles) or 12 months
— B — — E — — H	ITEM 6-10, 6-12, 6-13 Manual transmission, transfer and differential oil		R	Every 30,000 km (18,000 miles) or 24 months
— B — — E — — H	ITEM 6-11 Automatic transmission fluid		R	Every 30,000 km (18,000 miles) or 24 months
— B C D — — — —	ITEM 6-14 Steering knuckle seal		I	Every 15,000 km (9,000 miles) or 12 months

NOTES:

"I": Inspect and correct, replace or lubricate if necessary
"R: Replace or change
"T : Tighten to the specified torque
***1 : Inspect or replace more frequently if necessary**

MAINTENANCE SERVICE

ENGINE

ITEM 1-1

Drive Belt Inspection and Replacement

WARNING:
All inspection and replacement are to be performed with ENGINE NOT RUNNING.

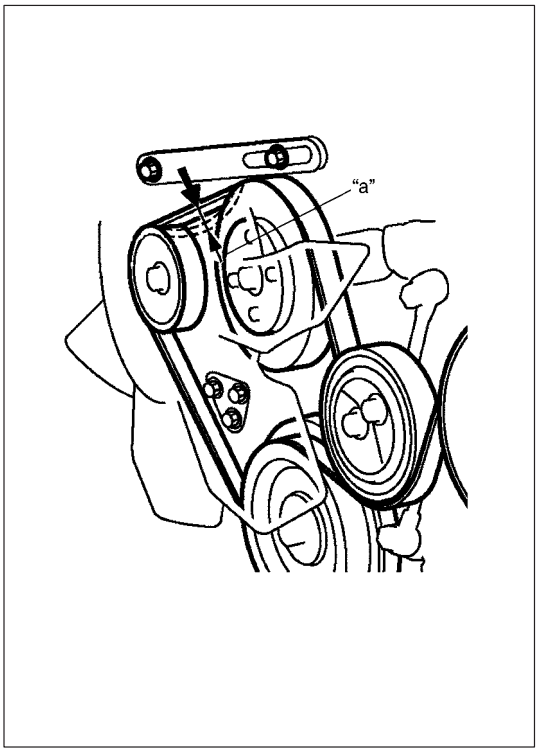

Water pump and generator drive belt

Inspection

1) Disconnect negative cable at battery.
2) Inspect belt for cracks, cuts, deformation, wear and cleanliness.
   If any defect exists, replace.
   Check belt for tension.

   Water pump and generator belt tension
   "a": 4.5 – 5.5 mm (0.18 – 0.22 in.) deflection under 100 N (10 kg, 22 lb) pressure

   NOTE:
   When replacing belt with a new one, adjust belt tension to 3 – 4 mm (0.12 – 0.16 in.).
3) If belt is too tight or too loose, adjust it to specification by adjusting alternator position.
4) Tighten alternator adjusting bolts and pivot bolt.
5) Connect negative cable to battery.

Replacement

Replace belt. Refer to Section 6B for replacement procedure of pump belt.

Power steering pump and/or A/C compressor drive belts (if equipped).

Inspection

1) Disconnect negative cable at battery.
2) Inspect belt for cracks, cuts, deformation, wear and cleanliness.
   If any defect exists, replace.

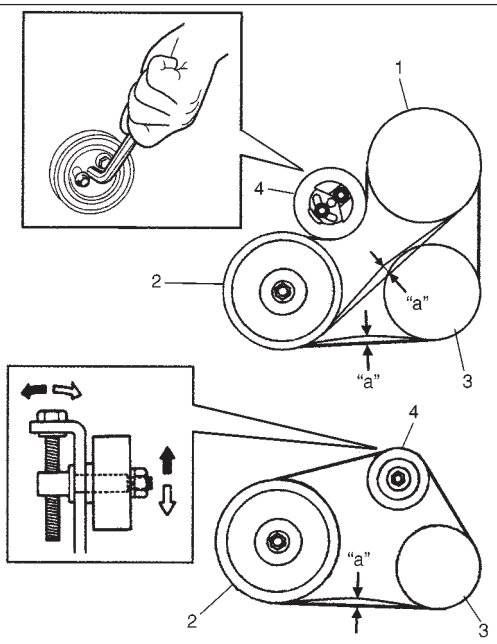

1. P / S pump pulley
2. Crankshaft pulley
3. A/C compressor pulley (if equipped)
4. Belt tension pulley

3) Check belt for tension.

Power steering pump and/or A/C compressor drive belt tension
"a": 6 – 9 mm (0.24 – 0.35 in.) deflection under 100 N (10 kg, 22 lb) pressure.

4) If belt tension is out of above specification, adjust it referring to Section 1B or 3B1.
5) Connect negative cable to battery.

Replacement

Replace belt with new one referring to Section 1B or 3B1.

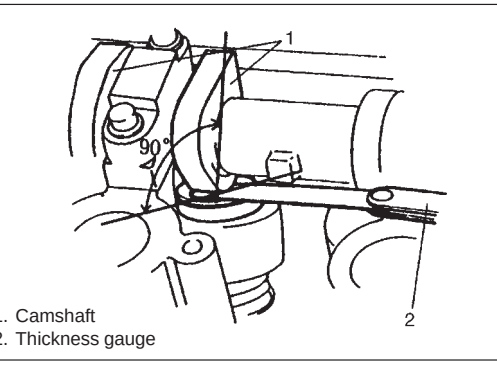

1. Camshaft
2. Thickness gauge

ITEM 1-2

Valve Lash Inspection

1) Inspect intake and exhaust valve lash and adjust as necessary. Refer to Section 6A1 for valve lash inspection and adjustment procedure.

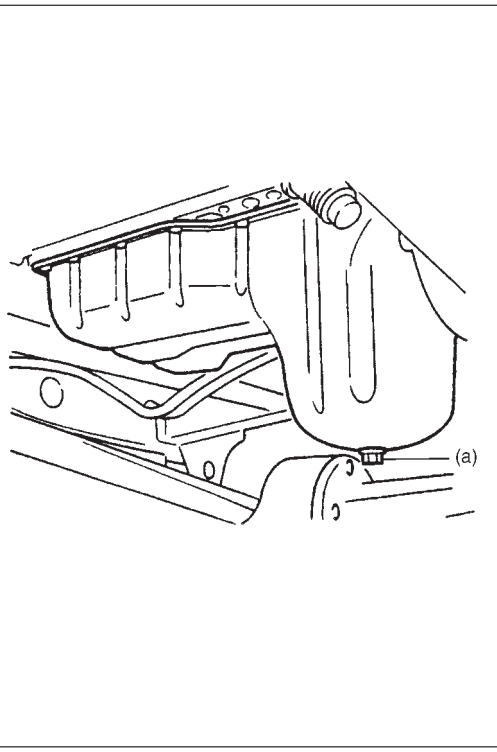

ITEM 1-3

Engine Oil and Filter Change

WARNING:
New and used engine oil can be hazardous.
Be sure to read "WARNING" in General Precaution in Section 0A and observe what in written there.

Before draining engine oil, check engine for oil leakage. If any evidence of leakage is found, make sure to correct defective part before proceeding to the following work.

1) Drain engine oil by removing drain plug.
2) After draining oil, wipe drain plug clean. Reinstall drain plug, and tighten it securely as specified below.

Tightening Torque
(a): 50 N·m (5.0 kg-m, 36.5 lb-ft)

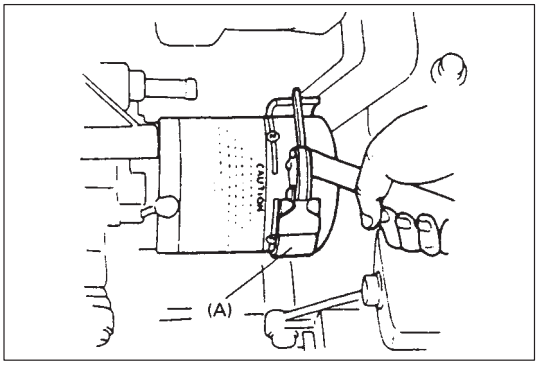

3) Loosen oil filter by using oil filter wrench (special tool).

Special Tool
(A): 09915-47330

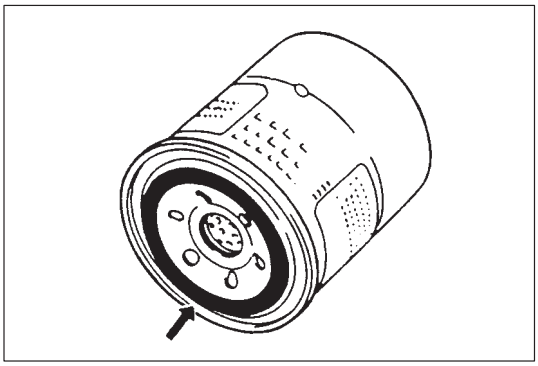

NOTE:
Before fitting new oil filter, be sure to oil its O-ring. Use engine oil for this purpose.

4) Screw new filter on oil filter stand by hand until the filter O-ring contacts the mounting surface.

CAUTION:
To tighten oil filter properly, it is important to accurately identify the position at which at filter O-ring first contacts the mounting surface.

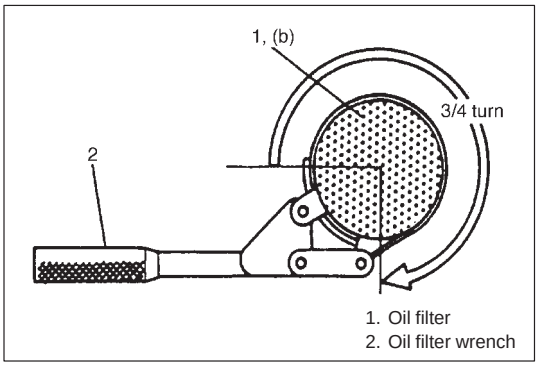

5) Tighten the filter 3/4 turn from the point of contact with the mounting surface using an oil filter wrench.

Tightening Torque (Reference)
(b): 14 N·m (1.4 kg-m, 10.5 lb-ft)

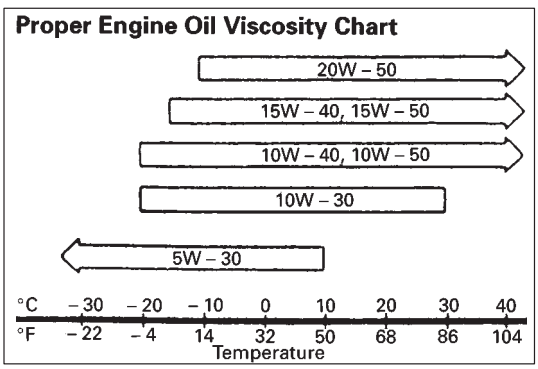

6) Replenish oil until oil level is brought to FULL level mark on dipstick. (oil pan and oil filter capacity). The filler inlet is at the top of the cylinder head cover.
It is recommended to use engine oil of SE, SF, SG, SH or SJ grade.

NOTE:
For temperature between –20°C (–4°F) and 30°C (86°F), it is highly recommended to use SAE 10W – 30 oil.

Oil pan capacity	About 3.8 liters (8.0/6.7 US/Imp pt.)
Oil filter capacity	About 0.2 liters (0.4/0.3 US/Imp pt.)
Others	About 0.3 liters (0.6/0.5 US/Imp pt.)
Total	About 4.3 liters (9.1/7.6 US/Imp pt.)

NOTE:
Engine oil capacity is specified. However, note that the amount of oil required when actually changing oil may somewhat differ from the data in the table depending on various conditions (temperature, viscosity, etc.)

7) Check oil filter and drain plug for oil leakage.

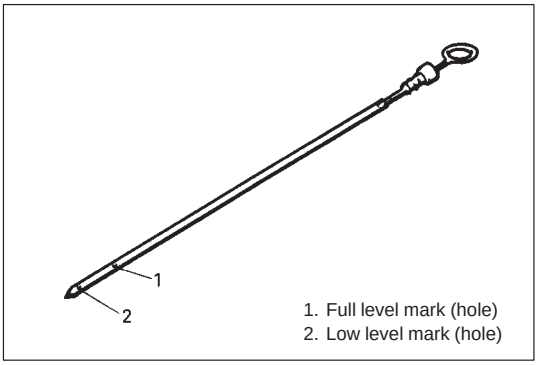

1. Full level mark (hole)
2. Low level mark (hole)

8) Start engine and run it for three minutes. Stop it and wait five minutes before checking oil level. Add oil, as necessary, to bring oil level to FULL level mark on dipstick.

NOTE:
Step 1) – 7) outlined above must be performed with ENGINE NOT RUNNING. For step 8), be sure to have adequate ventilation while engine is running.

ITEM 1-4
Engine Coolant Change

WARNING:
To help avoid danger of being burned, do not remove radiator cap while engine and radiator are still hot. Scalding fluid and steam can be blown out under pressure if cap is taken off too soon.

CAUTION:
When changing engine coolant, use mixture of 50% water and 50% ANTIFREEZE/ANTICORROSION COOLANT for the market where ambient temperature falls lower than –16°C (3°F) in winter, and mixture of 70% water and 30% ANTIFREEZE/ANTICORROSION COOLANT for the market where ambient temperature doesn't fall lower than –16°C (3°F).
Even in a market where no freezing temperature is anticipated, mixture of 70% water and 30% ANTIFREEZE/ANTICORROSION COOLANT should be used for the purpose of corrosion protection and lubrication.

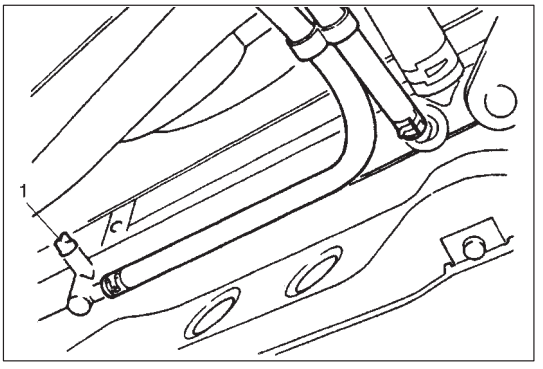

1) Remove radiator cap when engine is cool.
2) Loosen radiator drain plug (1) to drain coolant.
3) Remove reservoir, which is on the side of radiator, and drain.
4) Tighten plug securely. Also reinstall reservoir.

5) Fill radiator with specified amount of coolant, and run engine for 2 or 3 minutes at idle. This drives out any air which may still be trapped within cooling system. STOP ENGINE. Add coolant as necessary until coolant level reaches the filler throat of radiator. Reinstall radiator cap.

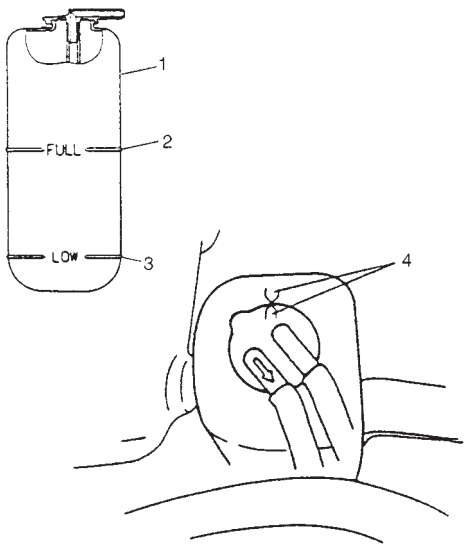

1. Reservoir
2. FULL level mark
3. LOW level mark
4. Arrow mark

6) Add coolant to reservoir so that its level aligns with Full mark. Then, reinstall cap aligning arrow marks on reservoir and cap.

NOTE:
When installing reservoir cap, align arrow marks on reservoir and cap.

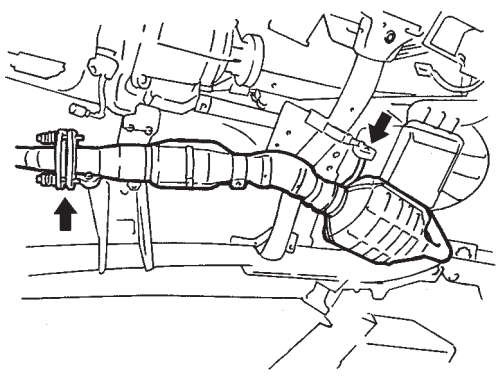

ITEM 1-5
Exhaust System Inspection

WARNING:
To avoid danger of being burned, do not touch exhaust system when it is still hot. Any service on exhaust system should be performed when it is cool.

When carrying out periodic maintenance, or the vehicle is raised for other service, check exhaust system as follows:

- Check rubber mountings for damage, deterioration, and out of position.
- Check exhaust system for leakage, loose connections, dents and damages.
  If bolts or nuts are loose, tighten them to specification.
- Check nearby body areas for damaged, missing, or mispositioned parts, open seams, holes, loose connections or other defects which could permit exhaust fumes to seep into the vehicle.

- Make sure that exhaust system components have enough clearance from the underbody to avoid overheating and possible damage to the floor carpet.
- Any defects should be fixed at once.

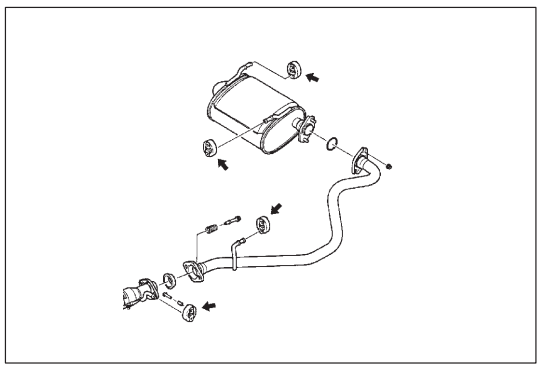

Mounting replacement

Replace muffler rubber mountings with new ones periodically. Refer to Section 6K for installation.

IGNITION SYSTEM

ITEM 2-1

Spark Plugs Replacement

Replace spark plugs with new ones referring to Section 6F.

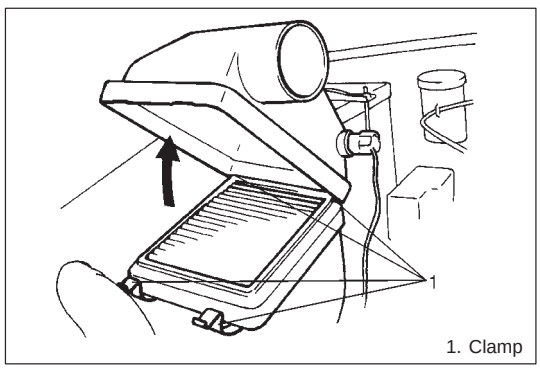

1. Clamp

FUEL SYSTEM

ITEM 3-1

Air Cleaner Filter

Inspection

1) Remove air cleaner case clamps.
2) Take cleaner filter out of air cleaner case.
3) Check air cleaner filter for dirt. Replace excessively dirty filter.

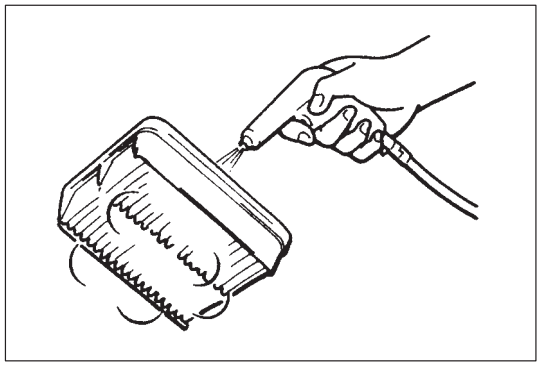

4) Blow off dust by compressed air from air outlet side of filter
5) Install air cleaner filter into case.
6) Install air cleaner case cap and clamp it securely.

Replacement

Replace air cleaner filter with new one according to above steps 1), 2) and 5), 6).

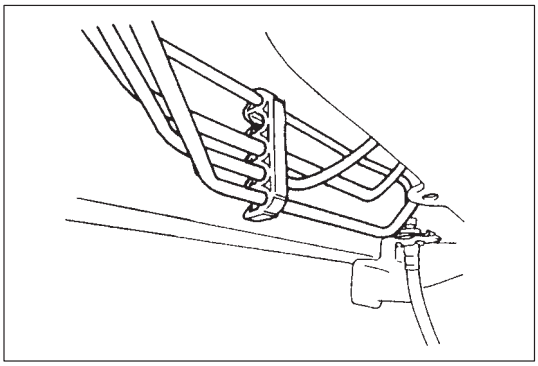

ITEM 3-2

Fuel Lines and Connections

Inspection

1) Visually inspect fuel lines and connections for evidence of fuel leakage, hose cracking and damage. Make sure all clamps are secure.
   Repair leaky joints, if any.
   Replace hoses that are suspected of being cracked.

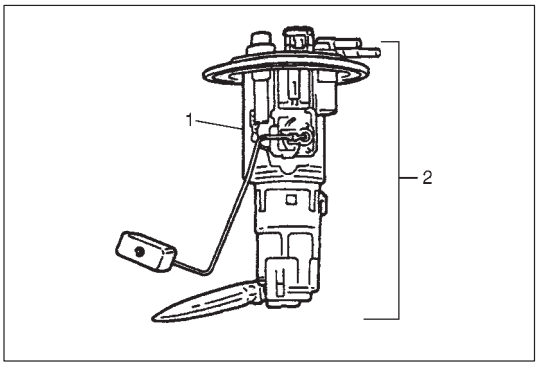

ITEM 3-3

Fuel Filter Replacement

WARNING:
This work must be performed in a well ventilated area and away from any open flames (such as gas hot water heaters).

Fuel filter (1) is a part of fuel pump assembly (2) which is installed in fuel tank. Replace fuel filter with new one periodically, referring to Section 6C for proper procedure.

ITEM 3-4

Fuel Tank Inspection

Check fuel tank for damage, cracks, fuel leakage, corrosion and tank bolts looseness.
If a problem is found, repair or replace.

EMISSION CONTROL SYSTEM

ITEM 4-1

Crankcase Ventilation Hoses and Connections Inspection

Refer to the following item 4-2, PCV valve inspection.

ITEM 4-2

PCV (Positive Crankcase Ventilation) Valve Inspection

Check crankcase ventilation hose and PCV hose for leaks, cracks or clog, and PCV valve for stick or clog. Refer to “On-Vehicle Service” of Section 6E for PCV valve checking procedure.

ITEM 4-3

Fuel Evaporative Emission Control System Inspection

1) Visually inspect hoses for cracks, damage, or excessive bends. Inspect all clamps for damage and proper position.
2) Check EVAP canister for operation and clog, referring to Section 6E.

If a malfunction is found, repair or replace.

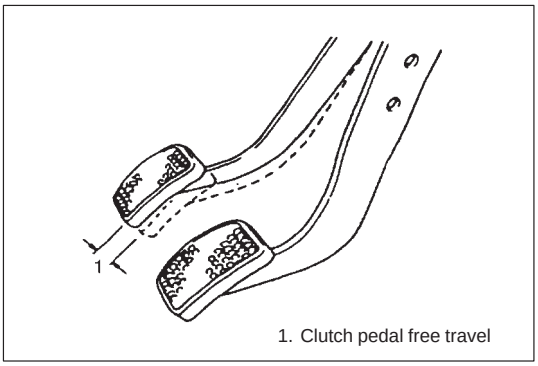

1. Clutch pedal free travel

CHASSIS AND BODY

ITEM 6-1

Clutch

Pedal inspection

Check clutch pedal for height and free travel referring to Section 7C. Adjust or correct if necessary.

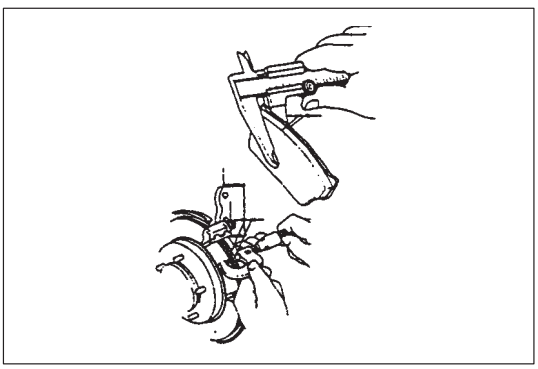

ITEM 6-2

Brake Discs, Pads, Brake Drums and Shoes Inspection

[Brake discs and pads]

1) Remove wheel and caliper but don’t disconnect brake hose from caliper.
2) Check front disc brake pads and discs for excessive wear, damage and deflection. Replace parts as necessary. For details, refer to Section 5.
   Be sure to torque caliper pin bolts to specification.

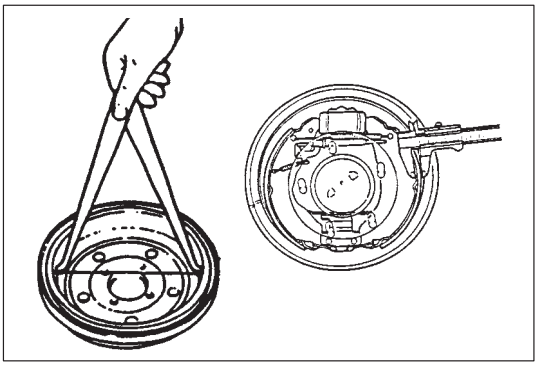

[Brake drums and shoes]

1) Remove wheel and brake drum.
2) Check rear brake drums and brake linings for excessive wear and damage, while wheels and drums are removed. At the same time, check wheel cylinders for leaks. Replace these parts as necessary.
   For details, refer to Section 5.

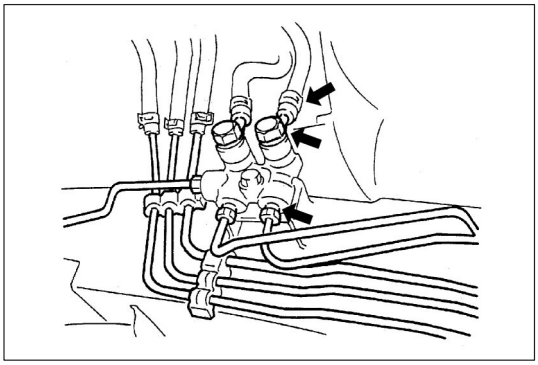

ITEM 6-3

Brake Hoses and Pipes Inspection

Check brake hoses and pipes for proper hookup, leaks, cracks, chafing and other damage.

Replace any of these parts as necessary.

CAUTION:
After replacing any brake pipe or hose, be sure to carry out air purge operation.

ITEM 6-4

Brake Fluid Change

CAUTION:
Since brake system of this vehicle is factory-filled with glycol-base brake fluid, do not use or mix different type of fluid when refilling system; otherwise serious damage will occur. Do not use old or used brake fluid, or one taken from unsealed container.

Change brake fluid as follows.

Drain existing fluid from brake system completely, fill system with above recommended fluid and carry out air purge operation.

For air purging procedure, refer to Section 5.

ITEM 6-5

Parking Brake Lever and Cable Inspection

Parking brake lever

1) Check tooth tip of each notch for damage or wear. If any damage or wear is found, replace parking lever.

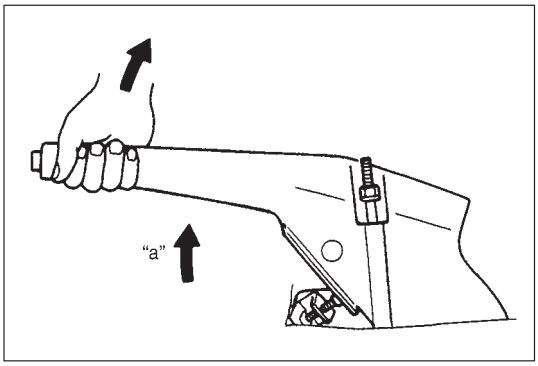

2) Check parking brake lever for proper operation and stroke, and adjust it if necessary.
   For checking and adjusting procedures, refer to PARKING BRAKE INSPECTION AND ADJUSTMENT in Section 5.

   "a": Parking brake lever stroke: 6 – 8 notches (with 200 N (20 kg, 44 lbs) of pull pressure)

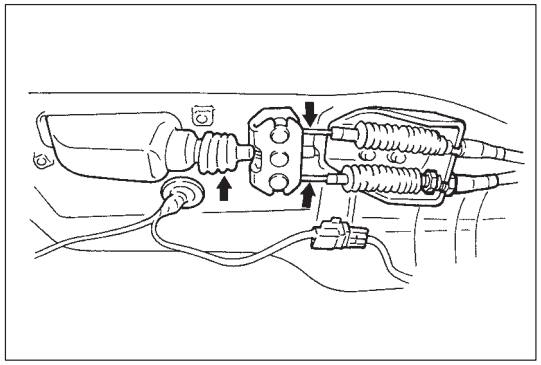

Parking brake cable

Inspect brake cable for damage and smooth movement.
Replace cable if it is in deteriorated condition.

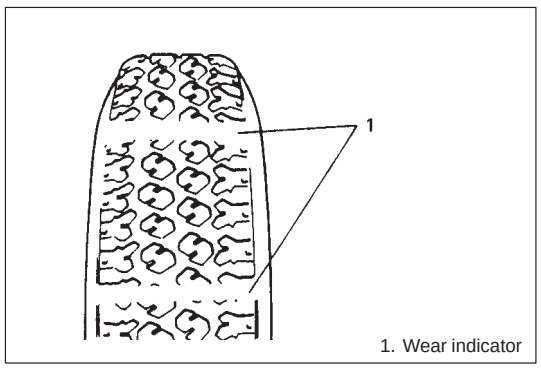

1. Wear indicator

ITEM 6-6

Tire Inspection and Rotation

1) Check tires for uneven or excessive wear, or damage.
   If defective, replace.
   Refer to Section 3 for details.

2) Check inflating pressure of each tire and adjust pressure to specification as necessary.
   Refer to Section 3F for details.

   NOTE:
   - **Tire inflation pressure should be checked when tires are cool.**
   - **Specified tire inflation pressure should be found on tire placard or in owner's manual which came with the vehicle.**

3) Rotate tires.
   For details, refer to Section 3F.

ITEM 6-7

Wheel Discs Inspection

Inspect each wheel disc for dents, distortion and cracks. A disc in badly damaged condition must be replaced.

Wheel Bearing Inspection

Inspection of wheel bearing

1) Check front wheel bearing for wear, damage, abnormal noise or rattles. For details, refer to FRONT SUSPENSION INSPECTION in Section 3D.
2) Check rear wheel bearing for wear, damage, abnormal noise or rattles. For details, refer to WHEEL DISK, NUT & BEARING of REAR SUSPENSION INSPECTION in Section 3E.

Inspection of front wheel bearing grease

1) Remove wheel hub referring to WHEEL HUB/BEARING/OIL SEAL REMOVAL in Section 3D.

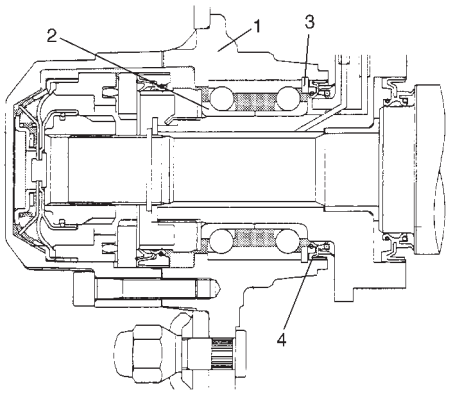

1. Wheel hub
2. Wheel bearing
3. Circlip
4. Wheel bearing oil seal

2) Check grease around front wheel bearing balls for deterioration and capacity.
   If grease is deteriorated, remove grease thoroughly and apply enough amount of new wheel bearing grease. If grease is found insufficient, add some more.
3) For reinstallation, refer to WHEEL HUB/BEARING/OIL SEAL INSTALLATION in Section 3D.

   NOTE:
   - **To reinstall bearing lock nut and lock plate, make sure to torque them to specification.**
   - **Be sure to tighten each bolt and nut to specified torque when reinstalling them.**
4) Upon completion of reinstalling all parts, check to make sure that front wheel bearing is not loose and wheel turns smoothly.

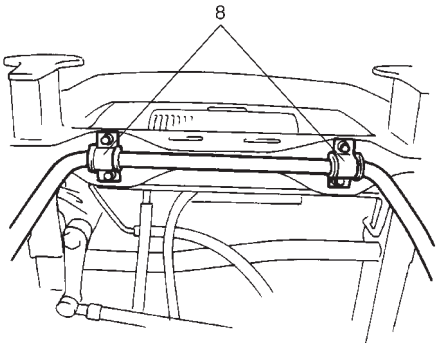

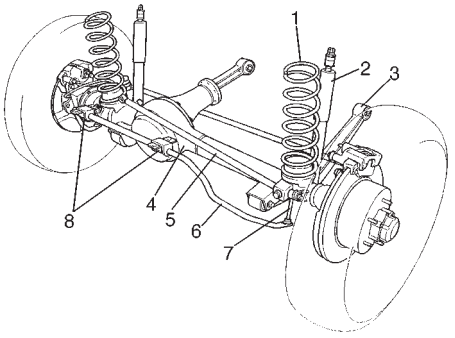

1. Coil spring
2. Shock absorber
3. Leading arm
4. Front axle housing
5. Lateral rod
6. Stabilizer bar
7. Ball joint
8. Bushing

ITEM 6-8

Suspension System Inspection

Check suspension bolts and nuts for tightness and retighten them as necessary.

Repair or replace defective parts, if any.

NOTE:

For details of check points, refer to tables of TIGHTENING TORQUE SPECIFICATION in Section 3D and 3E.

Front

1) Check stabilizer bar for damage or deformation.
2) Check bushing for damage, wear or deterioration.
3) Check coil spring, lateral rod and leading arm for deformation and damage.
4) Check lateral rod and leading arm bushings for wear, damage and deterioration.
5) Inspect absorbers for evidence of oil leakage, dents or any other damage on sleeves; and inspect anchor ends for deterioration.
6) Inspect for cracks or deformation in spring seat.
7) Inspect for deterioration of bump stopper.

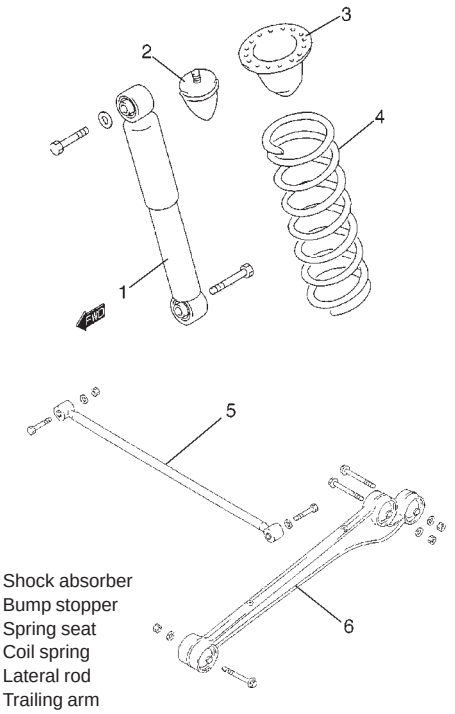

1. Shock absorber
2. Bump stopper
3. Spring seat
4. Coil spring
5. Lateral rod
6. Trailing arm

Rear

1) Check shock absorber for damage, deformation, oil leakage and operation.
2) Check bushings for wear and damage.
3) Check coil spring, trailing arm and lateral rod for deformation and damage.
4) Check trailing arm and lateral rod bushings and bump stopper for wear, damage and deterioration.
5) Check other suspension parts for damage, loose or missing parts; also for parts showing signs of wear or lack of lubrication.

Replace any parts found defective in steps 1) to 5).

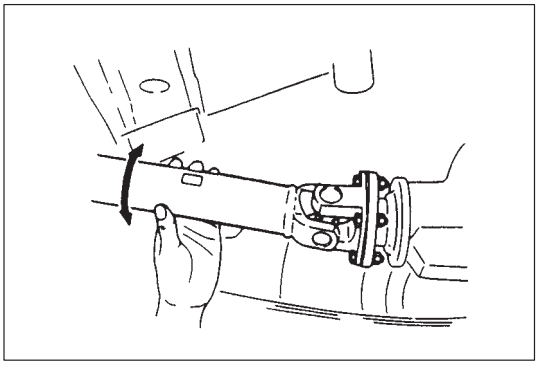

ITEM 6-9

Propeller Shafts

Inspection

1) Check universal joint and spline of propeller shaft for rattle. If rattle is found, replace defective part with a new one.
2) Check propeller shaft (front & rear) flange yoke bolts for tightness, and retighten them as necessary.
   Refer to Section 4B for tightening torque.

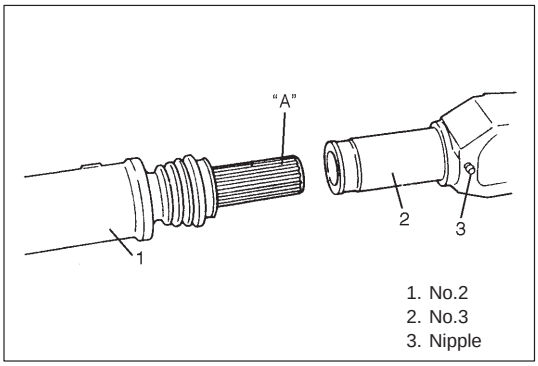

1. No.2
2. No.3
3. Nipple

Lubrication

Grease splines of propeller shaft No. 2 and No. 3.

"A": Chassis Grease

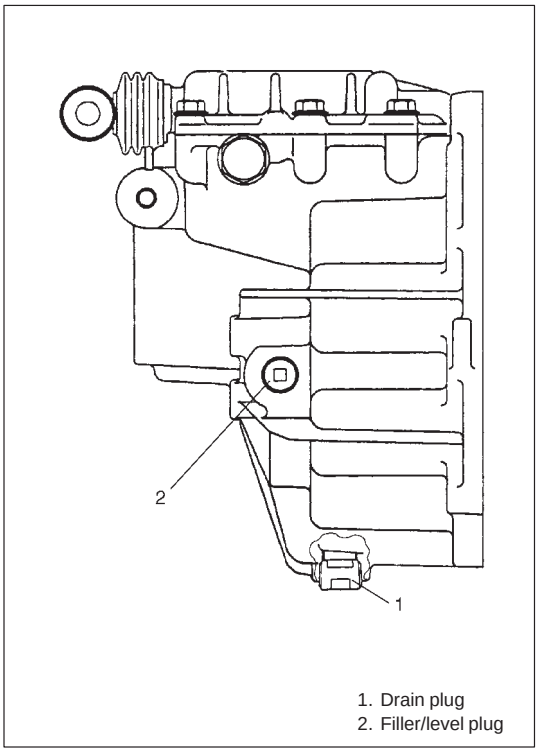

1. Drain plug
2. Filler/level plug

ITEM 6-10

Manual Transmission Oil

Inspection

1) Inspect transmission case for evidence of oil leakage.
   Repair leaky point if any.
2) Make sure that vehicle is placed level for oil level check.
3) Remove level plug of transmission.
4) Check oil level.
   Oil level can be checked roughly by means of level plug hole. That is, if oil flows out of level plug hole or if oil level is found up to hole when level plug is removed, oil is properly filled.
   If oil is found insufficient, pour specified amount of specified oil.
5) Tighten level plug to specified torque.
   Refer to Section 7A for installation and tightening torque.

Change

Change transmission oil with new specified oil referring to Section 7A.

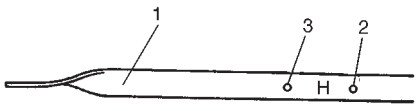

1. Dipstick
2. “FULL HOT” mark
3. “LOW HOT” mark

ITEM 6-11
Automatic Transmission Fluid
Inspection

1) Inspect transmission case for evidence of fluid leakage. Repair leaky point, if any.
2) Make sure that vehicle is placed level for fluid level check.
3) Check fluid level.
   For fluid level checking procedure, refer to “On-Vehicle Service” in Section 7B and be sure to perform it under specified conditions. If fluid level is low, replenish specified fluid.

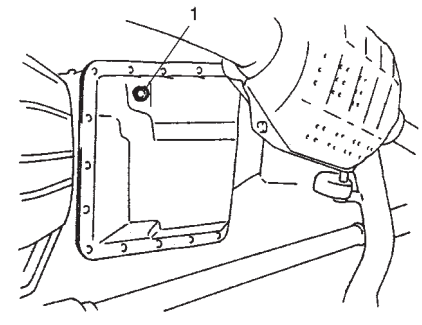

1. Drain plug

Change

1) Inspect transmission case for evidence of fluid leakage. Repair leaky point, if any.
2) Make sure that vehicle is placed level for fluid level check.
3) Change fluid. For its procedure, refer to “On-Vehicle Service” in Section 7B.

CAUTION:
Use of specified fluid is absolutely necessary.

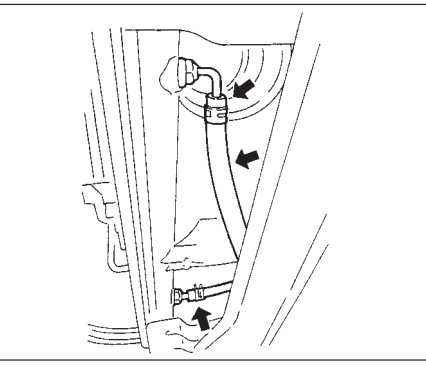

Fluid cooler hose change

Replace inlet and outlet hoses of cooler hose and their clamps. For replacement procedure, refer to “On-Vehicle Service” in Section 7B.

Transfer

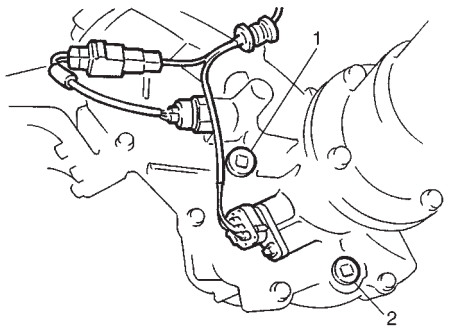

Front differential

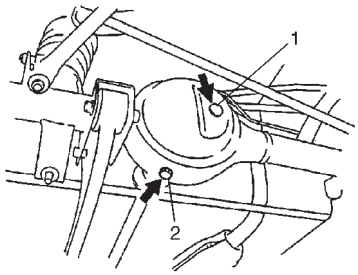

Rear differential

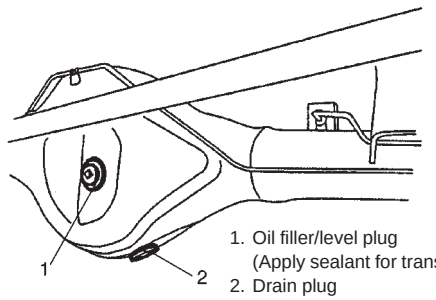

1. Oil filler/level plug
   (Apply sealant for transfer)
2. Drain plug
   (Apply sealant)

ITEM 6-12 and 13

Transfer and Differential Oil

Inspection

1) Check transfer case and differential for evidence of oil leakage. Repair leaky point if any.
2) Make sure that vehicle is placed level for oil level check.
3) Remove level plug of transfer and differentials (front and rear) and check oil level.
   Oil level can be checked roughly by means of level plug hole. That is, if oil flows out of level plug hole or if oil level is found up to hole when level plug is removed, oil is properly filled.
   If oil is found insufficient, pour specified amount of specified oil.

> **CAUTION:**
> **Hypoid gear oil must be used for differential.**

4) Tighten level plug to specified torque.
   Refer to Section 7D or 7E for tightening torque.

Change

Change transfer oil and differentials oil with new specified oil referring to Section 7D and 7E respectively.

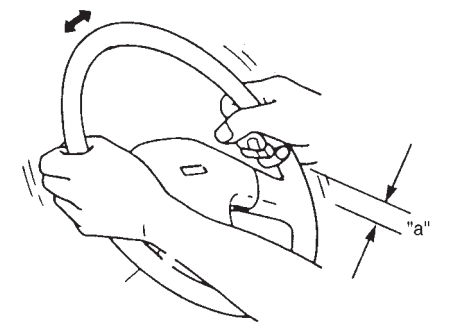

ITEM 6-14

Steering System Inspection

1) Check steering wheel for play and rattle, holding vehicle in straight forward condition on the ground.

   Steering wheel play “a”: 0 – 30 mm (0 – 1.2 in.)

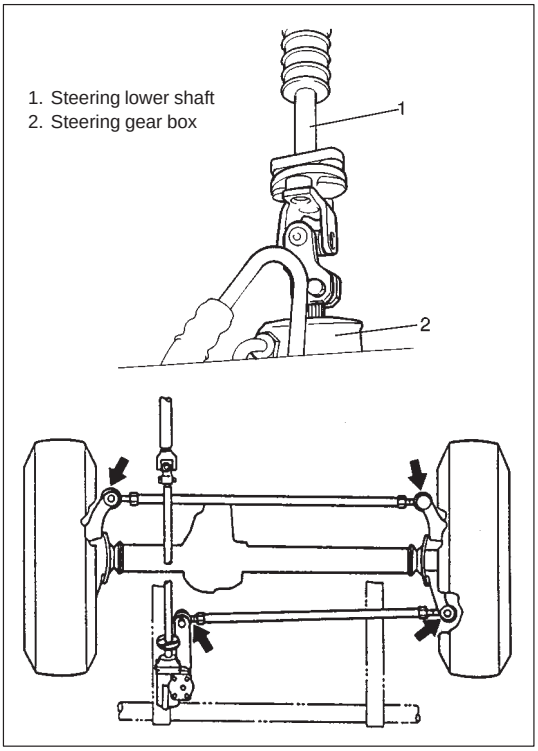

2) Check universal joints of steering lower shaft for rattle and damage. If rattle or damage is found, replace defective part with a new one.
3) Check steering linkage for looseness and damage. Repair or replace defective part, if any.
4) Check bolts and nuts for tightness and retighten them as necessary. Repair or replace defective parts, if any.
   Refer to table of TIGHTENING TORQUE SPECIFICATION in Section 3B (or 3B1) and 3C for particular check points.
5) Inspect steering gear box for evidence of oil leakage. If leakage is found, check oil level in gear box.
6) Check boots of steering linkage for damage (leaks, detachment, tear, dent, etc.). If damage is found, replace defective boot with new one.
7) Check wheel alignment.

NOTE:
For details of wheel alignment, refer to WHEEL ALIGNMENT of SECTION 3A.

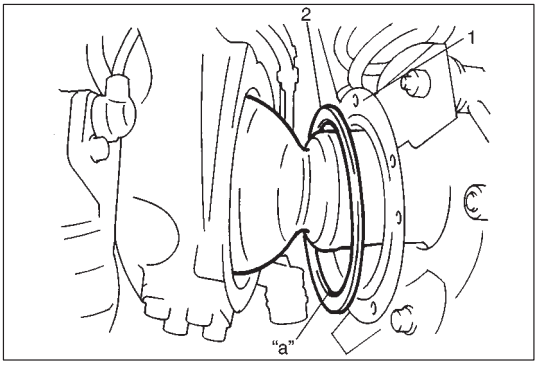

Steering knuckle seal inspection

1) Remove knuckle seal cover (1).
2) Check knuckle seal (2) for wear, damage and deterioration. If defective, replace.
3) Apply grease to seal lip and install seal and seal cover.

"a": Grease 99000-25010

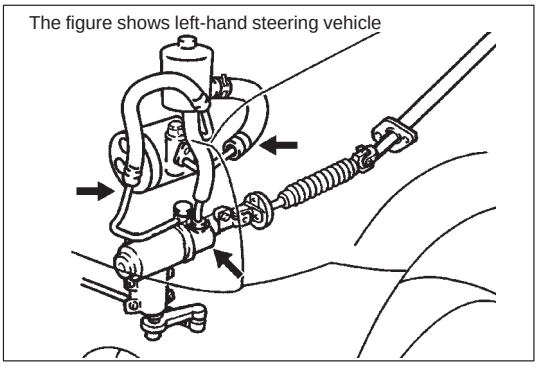

ITEM 6-15

Power Steering (P/S) System Inspection (if equipped)

1) Visually check power steering system for fluid leakage and hose for damage and deterioration.
   Repair or replace defective parts, if any.

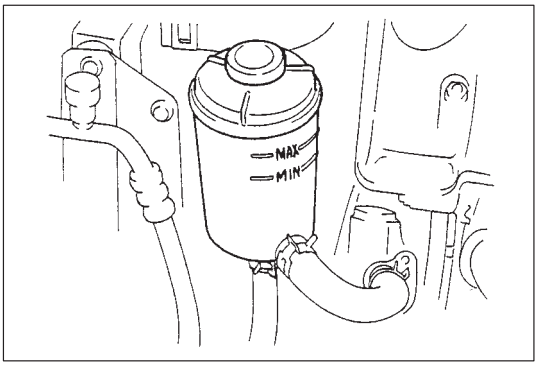

2) With engine stopped, check fluid level indicated on fluid tank or level gauge of tank cap, which should be between MAX and MIN marks. If it is lower than MIN, fill fluid up to MAX mark.

NOTE:
- **Be sure to use an equivalent of DEXRON®-II, DEXRON®-IIE or DEXRON®-III for P/S fluid.**
- **Fluid level should be checked when fluid is cool.**

3) Visually check pump drive belt for cracks and wear.
4) Check belt for tension, referring to Item 1-1.
   If necessary, have belt adjusted or replaced.

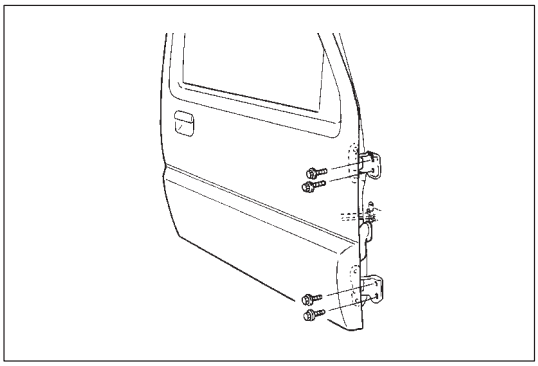

ITEM 6-16

All Hinges, Latches and Locks Inspection

Doors

Check that each door of front and back doors opens and closes smoothly and locks securely when closed.
If any malfunction is found, lubricate hinge and latch or repair door lock system.

Engine hood

Check that secondary latch operates properly (check that secondary latch keeps hood from opening all the way even when pulling hood release handle inside vehicle.) Also check that hood opens and closes smoothly and properly and hood locks securely when closed.
If any malfunction is found, lubricate hinge and latch, or repair hood lock system.
Check hood latch bolt for tightness.

Tightening torque for hood latch bolt
10 N·m (1.0 kg-m, 7.5 lb-ft)

FINAL INSPECTION

WARNING:
When carrying out road tests, select a safe place where no man or no running vehicle is seen so as to prevent any accident.

Seats
Check that seat slides smoothly and locks securely at any position. Also check that reclining mechanism of front seat back allows it to be locked at any angle.

Seat Belt
Inspect belt system including webbing, buckles, latch plates, retractors and anchors for damage or wear.
If "REPLACE BELT" label on front seat belt is visible, replace belt.
Check that seat belt is securely locked.

Battery Electrolyte Level Check
Check that the electrolyte level of all battery cells is between the upper and lower level lines on the case.
If battery is equipped with built-in indicator, check battery condition by the indicator.

Accelerator Pedal Operation
Check that pedal operates smoothly without getting caught or interfered by and other part.

Engine Start
Check engine start for readiness.

WARNING:
Before performing the following check, be sure to have enough room around the vehicle. Then, firmly apply both the parking brake and the regular brakes. Do not use the accelerator pedal. If the engine starts, be ready to turn off the ignition promptly. Take these precautions because the vehicle could move without warning and possibly cause personal injury or property damage.

On automatic transmission vehicles, try to start the engine in each select lever position. The starting motor should crank only in "P" (Park) or "N" (Neutral).
On manual transmission vehicles, place the shift lever in "Neutral," depress clutch pedal fully and try to start.

Exhaust System Check
Check for leakage, cracks or loose supports.

Clutch (For Manual transmission)
Check for the following.
- Clutch is completely released when depressing clutch pedal,
- No slipping clutch occurs when releasing pedal and accelerating.
- Clutch itself is free from any abnormal condition.

Gearshift or Selector Lever (Transmission)
Check gear shift or selector lever for smooth shifting to all positions and for good performance of transmission in any position.
With automatic transmission equipped vehicle, also check that shift indicator indicates properly according to which position selector lever is shifted to.

CAUTION:
With automatic transmission equipped vehicle, make sure that vehicle is at complete stop when shifting selector lever to "P" range position and release all brakes.

Brake
[Foot brake]
Check the following:
- that brake pedal has proper travel,
- that brake works properly,
- that it is free from noise,
- that braking force is applied equally on all wheels,
- and that brake do not drag.

[Parking brake]
Check that lever has proper travel.

WARNING:
With vehicle parked on a fairly steep slope, make sure nothing is in the way downhill to avoid any personal injury or property damage. Be prepared to apply regular brake quickly even if vehicle should start to move.

Check to ensure that parking brake is fully effective when the vehicle is stopped on the safe slope and brake lever is pulled all the way.

Steering
- Check to ensure that steering wheel is free from instability, or abnormally heavy feeling.
- Check that the vehicle does not wander or pull to one side.

Engine
- Check that engine responds readily at all speeds.
- Check that engine is free from abnormal noise and abnormal vibration.

Body, Wheels and Power Transmitting System
Check that body, wheels and power transmitting system are free from abnormal noise and abnormal vibration or any other abnormal condition.

Meters and Gauge
Check that speedometer, odometer, fuel meter, temperature gauge, etc. are operating accurately.

Lights
Check that all lights operate properly.

Windshield Defroster
Periodically check that air comes out from defroster outlet when operating heater or air conditioning.
Set fan switch lever to "HI" position for this check.

RECOMMENDED FLUIDS AND LUBRICANTS

Engine oil	SE, SF, SG, SH or SJ (Refer to engine oil viscosity chart in Item 1-3)
Engine coolant (Ethylene glycol base coolant)	"Antifreeze / Anticorrosion coolant"
Brake fluid	DOT 3
Manual transmission oil	Refer to Section 7A.
Transfer oil	
Differential oil (front & rear)	Refer to Section 7E.
Automatic transmission fluid	An equivalent of DEXRON®-IIE or DEXRON®-III
Power steering fluid	An equivalent of DEXRON®-II, DEXRON®-IIE or DEXRON®-III
Clutch linkage pivot points	Water resistance chassis grease (SUZUKI SUPER GREASE A 99000-25010)
Steering knuckle seal	
Door hinges	Engine oil or water resistance chassis grease
Hood latch assembly	
Key lock cylinder	Spray lubricant

SECTION 1B

AIR CONDITIONING (OPTIONAL)

WARNING:
For vehicles equipped with Supplemental Restraint (Air Bag) System:

- **Service on and around the air bag system components or wiring must be performed only by an authorized SUZUKI dealer. Refer to "Air Bag System Components and Wiring Location View" under "General Description" in air bag system section in order to confirm whether you are performing service on or near the air bag system components or wiring. Please observe all WARNINGS and "Service Precautions" under "On-Vehicle Service" in air bag system section before performing service on or around the air bag system components or wiring. Failure to follow WARNINGS could result in unintentional activation of the system or could render the system inoperative. Either of these two conditions may result in severe injury.**
- **Technical service work must be started at least 90 seconds after the ignition switch is turned to the "LOCK" position and the negative cable is disconnected from the battery. Otherwise, the system may be activated by reserve energy in the Sensing and Diagnostic Module (SDM).**

CAUTION:
The air conditioning system of this vehicle uses refrigerant HFC-134a (R-134a).
None of refrigerant, compressor oil and component parts is interchangeable between two types of A/C: one using refrigerant HFC-134a (R-134a) and the other using refrigerant CFC-12 (R-12).
Be sure to check which refrigerant is used before any service work including inspection and maintenance. For identification between these two types, refer to "REFRIGERANT TYPE" in this section.
When replenishing or changing refrigerant and compressor oil and when replacing parts, make sure that the material or the part to be used is appropriate to the A/C installed in the vehicle being serviced. Use of incorrect one will result in leakage of refrigerant, damage in parts or other faulty condition.

NOTE:
For basic servicing method of the air conditioning system that is not described in this section, refer to AIR CONDITIONING BASIC MANUAL (Part number: 99520-02130).

CONTENTS

GENERAL DESCRIPTION 1B- 2
Major Components and Location 1B- 2
Refrigerant Circulation 1B- 3
Refrigerant Type 1B- 3
DIAGNOSIS 1B- 4
General Diagnosis Table 1B- 4
Abnormal Noise Diagnosis 1B- 6
Quickly Checking of Refrigerant Charge . . . 1B- 8
Performance Diagnosis 1B- 9
Compressor Drive Belt Inspection and Adjustment 1B-13
ELECTRONICAL DIAGNOSIS 1B-14
Wiring Diagram 1B-14
A/C System Inspection of ECM and Its Circuits 1B-15
REFRIGERANT RECOVERY, EVACUATING AND CHARGING 1B-17
Operation Procedure for Refrigerant Charging 1B-17
Recovery 1B-18
Replenishing Compressor Oil 1B-18
Evacuating 1B-20
Charging 1B-21
Removing Manifold Gauge Set 1B-23
Leak Test 1B-23

ON-VEHICLE SERVICE 1B-24
Service Precaution 1B-24
Refrigerant line 1B-24
Handling refrigerant HFC-134a (R-134a) 1B-25
Condenser Assembly 1B-26
Receiver/Dryer 1B-27
Condenser Cooling Fan Assembly 1B-28
Cooling Unit (Evaporator) 1B-29
A/C Evaporator Thermistor (A/C Evaporator Temperature Sensor) 1B-31
Expansion Valve 1B-31
Dual Pressure Switch 1B-32
A/C Switch 1B-32
Condenser Cooling Fan Motor Relay 1B-33
Compressor 1B-33
Magnet clutch 1B-35
Lip type seal 1B-38
REQUIRED SERVICE MATERIALS 1B-40
SPECIAL TOOLS 1B-40

GENERAL DESCRIPTION

MAJOR COMPONENTS AND LOCATION

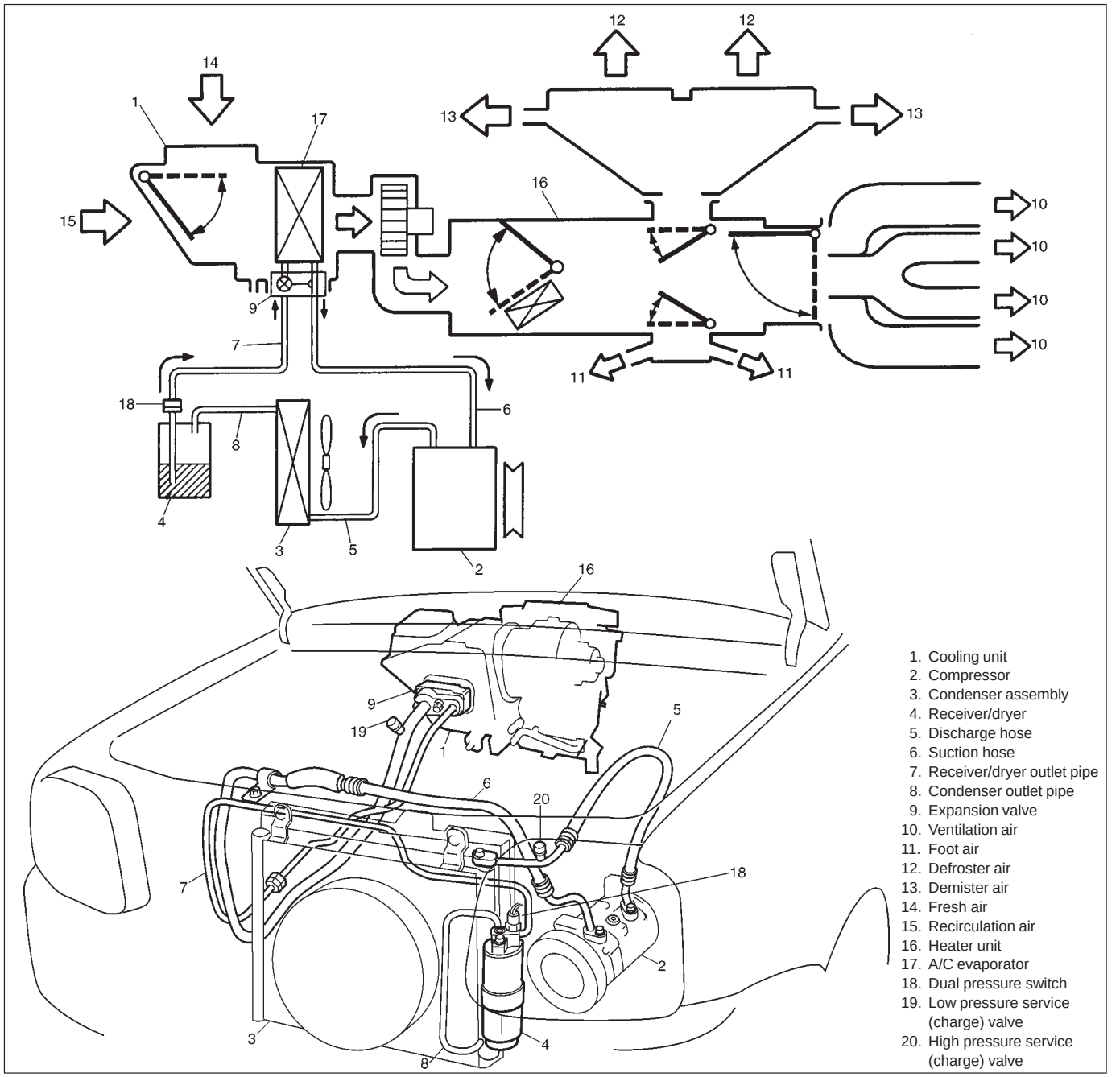

REFRIGERANT CIRCULATION

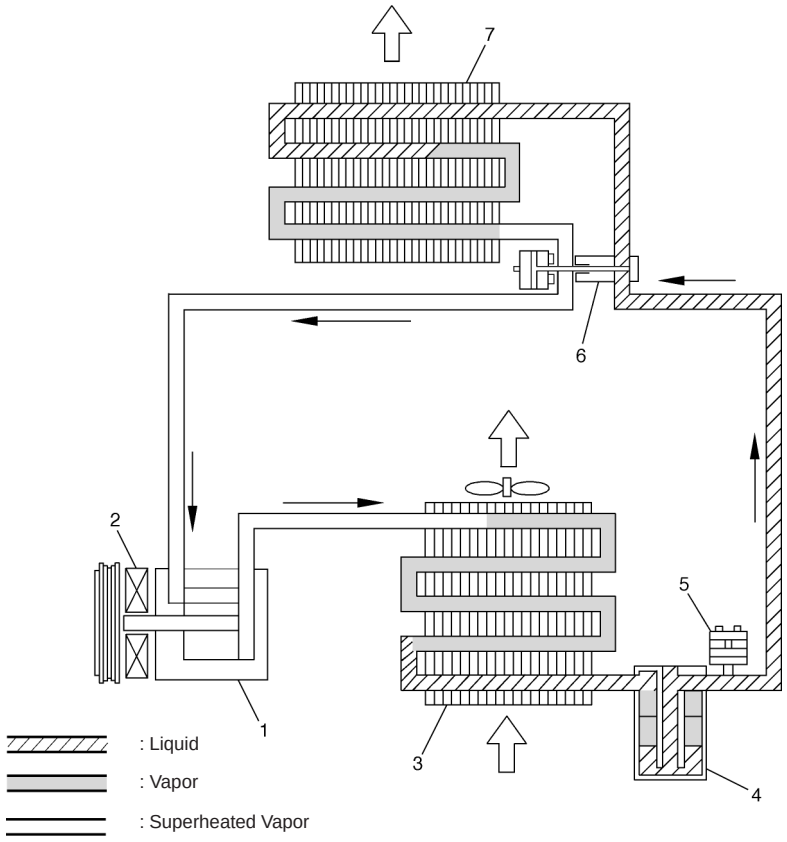

1. Compressor
2. Magnet clutch
3. Condenser assembly
4. Receiver/dryer
5. Dual pressure switch
6. Expansion valve
7. Evaporator

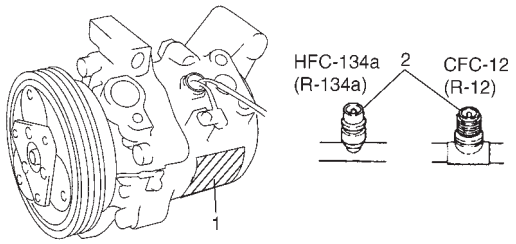

REFRIGERANT TYPE

Whether the A/C in the vehicle being serviced uses HFC-134a (R-134a) or CFC-12 (R-12) is indicated on compressor label (1). Also, it can be checked by the shape of the service (charge) valve (2).

DIAGNOSIS

GENERAL DIAGNOSIS TABLE

Condition	Possible Cause	Correction
Cool air won't come out (A/C system won't operative)	● No refrigerant	● Perform recover, evacuation and charging.
	● Fuse blown	● Check fuses in main and circuit fuse boxes, and check short circuit to ground.
	● A/C switch faulty	● Check A/C switch.
	● Blower fan switch faulty	● Check blower fan switch referring to Section 1A.
	● A/C evaporator thermistor faulty	● Check A/C evaporator thermistor.
	● Dual pressure switch faulty	● Check dual pressure switch.
	● Wiring or grounding faulty	● Repair as necessary.
	● ECT sensor faulty	● Check ECT sensor referring to Section 6E1.
	● ECM and its circuit faulty	● Check ECM and its circuit referring to Section 6E1.
	● 4WD controller faulty	● Check 4WD controller referring to Section 3D.
Cool air won't come out (A/C compressor won't operative)	● ECM faulty	● Check ECM and its circuit referring to Section 6E1.
	● Magnet clutch faulty	● Check magnet clutch.
	● Compressor drive belt loosen or broken	● Adjust or replace drive belt.
	● Compressor faulty	● Check compressor.
Cool air won't come out (A/C condenser cooling fan motor won't operative)	● Fuse blown	● Check "A/C" fuse in main fuse box, and check short circuit to ground.
	● Wiring or grounding faulty	● Repair as necessary.
	● Condenser cooling fan motor relay faulty	● Check condenser cooling fan motor relay.
	● Condenser cooling fan motor faulty	● Check condenser cooling fan motor.
Cool air won't come out (Blower fan motor won't operative)	● Fuse blown	● Check fuses in main and circuit fuse boxes, and check short circuit to ground.
	● Blower fan motor resistor faulty	● Check blower fan motor resistor referring to Section 1A.
	● Blower fan switch faulty	● Check blower fan switch referring to Section 1A.
	● Wiring or grounding faulty	● Repair as necessary.
	● Blower fan motor faulty	● Check blower fan motor referring to Section 1A.

Condition	Possible Cause	Correction
Cool air won't come out or insufficient cooling (A/C system normal operative)	● Insufficient or excessive charge of refrigerant ● Condenser clogged ● A/C evaporator clogged or frosted ● A/C evaporator thermistor faulty ● Expansion valve faulty ● Receiver/dryer clogged ● Compressor drive belt loosen or broken ● Magnetic clutch faulty ● Compressor faulty ● Air in A/C system ● Air leaking from cooling unit or air duct ● Heater and ventilation system faulty ● Blower fan motor faulty ● Excessive compressor oil existing in A/C system	● Check charge of refrigerant and system for leaks. ● Check condenser. ● Check A/C evaporator and A/C evaporator thermistor. ● Check A/C evaporator thermistor. ● Check expansion valve. ● Check receiver/dryer. ● Adjust or replace drive belt. ● Check magnetic clutch. ● Check compressor. ● Replace receiver/dryer, and perform evacuation and charging. ● Repair as necessary. ● Check air inlet box (cooling unit), heater control lever assembly and heater unit referring to Section 1A. ● Check blower fan motor referring to Section 1A. ● Pull out compressor oil in A/C system circuit, and replace compressor.
Cool air won't come out only intermittently	● Wiring connection faulty ● Expansion valve faulty ● Excessive moisture in A/C system ● Magnetic clutch faulty ● Excessive charge of refrigerant ● Thermal switch faulty	● Repair as necessary. ● Check expansion valve. ● Replace receiver/dryer, and perform evacuation and charging. ● Check magnetic clutch. ● Check charge of refrigerant. ● Check thermal switch.
Cool air comes out only at high speed	● Condenser clogged ● Insufficient charge of refrigerant ● Air in A/C system ● Compressor drive belt loosen or broken ● Compressor faulty	● Check A/C condenser. ● Check charge of refrigerant. ● Replace receiver/dryer, and perform evacuation and charging. ● Adjust or replace drive belt. ● Check compressor.
Cool air won't come out only at high speed	● Excessive charge of refrigerant ● A/C evaporator frosted	● Check charge refrigerant. ● Check A/C evaporator and A/C evaporator thermistor.
Insufficient velocity of cooled air	● A/C evaporator clogged or frosted ● Air leaking from cooling unit or air duct ● Blower fan motor faulty ● Wiring or grounding faulty	● Check A/C evaporator and A/C evaporator thermistor. ● Repair as necessary. ● Check blower fan motor referring to Section 1A. ● Repair as necessary.

ABNORMAL NOISE DIAGNOSIS

There are various types of noise, ranging from those produced in the engine compartment to those from the passenger compartment, also from rumbling noises to whistling noises.

ABNORMAL NOISE FROM COMPRESSOR

Condition	Possible Cause	Correction
● During compressor operation, a rumbling noise is heard proportional to engine revolutions.	● Inadequate clearance in piston area (piston or swash-plate).	● Repair or replace compressor as necessary
● A loud noise is heard at a certain rpm, disproportionately to engine revolution.	● Loose or faulty compressor drive belt. ● Loose compressor mounting bolts.	● Adjust drive belt tension, or replace belt. ● Retighten mounting bolts.
● A loud rattle is heard at low engine rpm.	● Loose compressor clutch plate bolt.	● Retighten clutch plate bolt. Replace compressor if it was operated in this condition for a long time.

ABNORMAL NOISE FROM MAGNETIC CLUTCH

Condition	Possible Cause	Correction
● A rumbling noise is heard when compressor is not operating.	● Worn or damaged bearings.	● Replace magnet clutch assembly.
● A chattering noise is heard when compressor is engaged.	● Faulty clutch clearance (excessive). ● Worn clutch friction surface. ● Compressor oil leaked from lip type seal. ● Contaminating the friction surface.	● Adjust clutch clearance. ● Replace magnet clutch assembly. ● Replace lip type seal. ● Replace compressor body assembly.

ABNORMAL NOISE FROM TUBING

Condition	Possible Cause	Correction
● A droning noise is heard inside vehicle, but not particularly noticeable in engine compartment.	● Faulty tubing clamps. ● Resonance caused by pulsation from variations in refrigerant pressure.	● Reposition clamps or increase the number of clamps. ● Attach a silencer to tubing, or modify its position and length.

ABNORMAL NOISE FROM CONDENSER

Condition	Possible Cause	Correction
● Considerable vibration in condenser.	● Resonance from condenser bracket and body.	● Firmly insert a silencer between condenser bracket and body.

ABNORMAL NOISE FROM CRANKSHAFT PULLEY

Condition	Possible Cause	Correction
● A large rattling noise is heard at idle or sudden acceleration.	● Loosen crankshaft pulley bolt.	● Retighten bolt.

ABNORMAL NOISE FROM TENSION PULLEY

Condition	Possible Cause	Correction
● Clattering noise is heard from pulley. ● Pulley cranks upon contact.	● Worn or damaged bearing. ● Cracked or loose bracket.	● Replace tension pulley. ● Replace or retighten bracket.

ABNORMAL NOISE FROM A/C EVAPORATOR

Condition	Possible Cause	Correction
● Whistling sound is heard from A/C evaporator.	● Depending on the combination of the interior/exterior temperatures, engine rpm and refrigerant pressure, the refrigerant flowing out of the expansion valve may, under certain conditions, make a whistling sound.	● At times, slightly decreasing refrigerant volume may stop this noise. Inspect expansion valve and replace if faulty.

ABNORMAL NOISE FROM BLOWER FAN MOTOR

Condition	Possible Cause	Correction
● Blower fan motor emits a chirping sound in proportion to its speed of rotation. ● Fluttering noise or large droning noise is heard from blower fan motor.	● Worn or damaged motor brushes or commutator. ● Leaves or other debris introduced from fresh air inlet to blower fan motor.	● Repair or replace blower fan motor. ● Remove debris and make sure that the screen at fresh air inlet is intact.

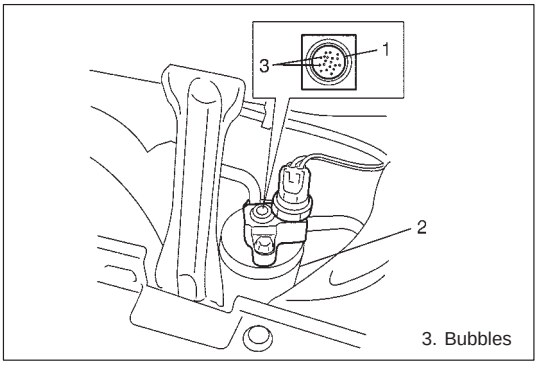

3. Bubbles

QUICKLY CHECKING OF REFRIGERANT CHARGE

The following procedure can be used for quickly checking whether the A/C system has a proper charge of refrigerant or not.
Run engine at fast idle, and operate A/C at its maximum cooling capacity for a few minutes. Then, look at the sight glass (1) on receiver/dryer (2) and compare what is observed with the symptoms listed in below.

CHECKING REFRIGERANT CHARGE

Item No.	Symptom	Charge of refrigerant condition	Correction
1	Bubbles observed in sight glass	Insufficient charge of refrigerant in system	Check system for leaks with a leak tester.
2	No bubbles observed in sight glass	No or insufficient charge of refrigerant in system	Refer to the items 3 and 4.
3	No temperature difference between compressor inlet and outlet	Empty or nearly empty system	Evacuate and charge system and then check it for leaks with a leak tester.
4	Noticeable temperature difference between compressor inlet and outlet	Proper or too much charge of refrigerant in system	Refer to the items 5 and 6.
5	When A/C is turned OFF, refrigerant in sight glass clears immediately and remains clear	Too much charge of refrigerant in system	Discharge excess charge of refrigerant to adjust it to a specified charge.
6	When A/C is turned OFF, refrigerant in sight glass once produces bubbles and then clears	Proper charge of refrigerant in system	No correction needed because charge of refrigerant is normal.

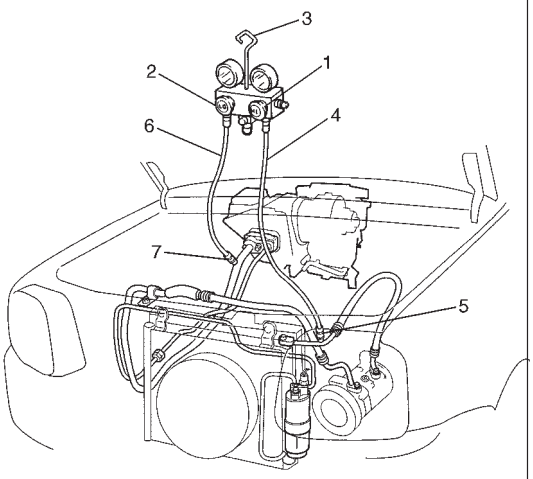

PERFORMANCE DIAGNOSIS

1) Confirm that vehicle and environmental conditions are as follows.
   - Vehicle is not exposed to direct sun.
   - Ambient temperature is within 15 – 35°C (59 – 95°F).
2) Make sure that high pressure valve (1) and low pressure valve (2) of manifold gauge set (3) are firmly closed.
3) Connect high pressure charging hose (4) to high pressure service valve (5), and connect low pressure charging hose (6) to low pressure service valve (7).
4) Bleed the air in charging hoses (4), (6) by loosening their respective nuts on manifold gauge set (3), utilizing the refrigerant pressure. When a hissing sound is heard, immediately tighten nut.

> **CAUTION:**
> **Do not interchange high and low pressure charging hoses by mistake.**

5) Warm up engine to normal operating temperature (engine coolant temperature at 80 – 90°C (176 – 194°F)) and keep it at specified idle speed. (Radiator cooling fan should not be working when checking pressure and temperature.)
6) Turn A/C switch ON, and set blower switch at "HI" (3rd position), temperature knob at "COOL", air outlet control knob at "FACE" and fresh/circulation control knob at "CIRCULATION". (Confirm that A/C compressor and radiator/condenser cooling fan are working.)
   Keep all windows, doors and engine food open.

Ambient temperature	15 – 35°C (59 – 95°F)
Engine rpm	Keep to 1,500 rpm.
Blower fan motor switch	"HI" (3rd position)
Temperature control	"COOL"
Air outlet control	"FACE"
Vehicle doors	All open
Air inlet door position	Recirculation

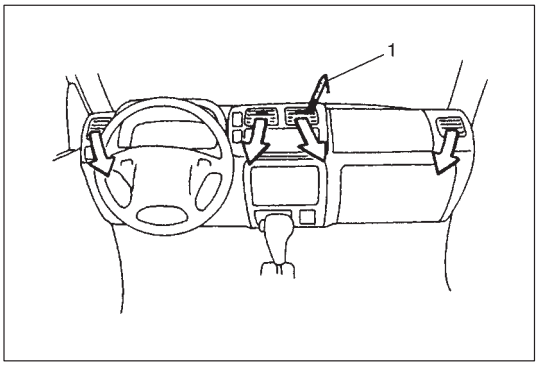

7) With dry bulb thermometer (1) inserted into center duct air outlet and another one set near evaporator air inlet, read temperature indicated on each thermometer.

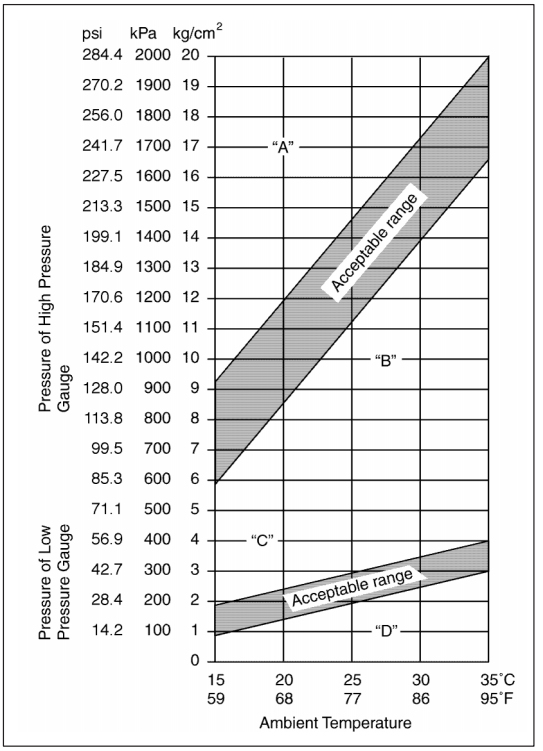

8) Check for each pressure of low side and high side if it is within shaded range of graph.
If each gauge reading is out of specified pressure, correct defective part referring to "PERFORMANCE DIAGNOSIS TABLE" on next page.

NOTE:
Pressure registered on gauge varies with ambient temperature. Therefore, use graph when determining if pressures are normal or not.

Example:

Gauges should read as follows when ambient temperature is 30°C (86°F).	
Pressure on high pressure gauge	**1400 – 1750 kPa** **14.0 – 17.5 kg/cm^2** **199.1 – 248.9 psi**
Pressure on low pressure gauge	**230 – 350 kPa** **2.3 – 3.5 kg/cm^2** **32.7 – 49.8 psi**

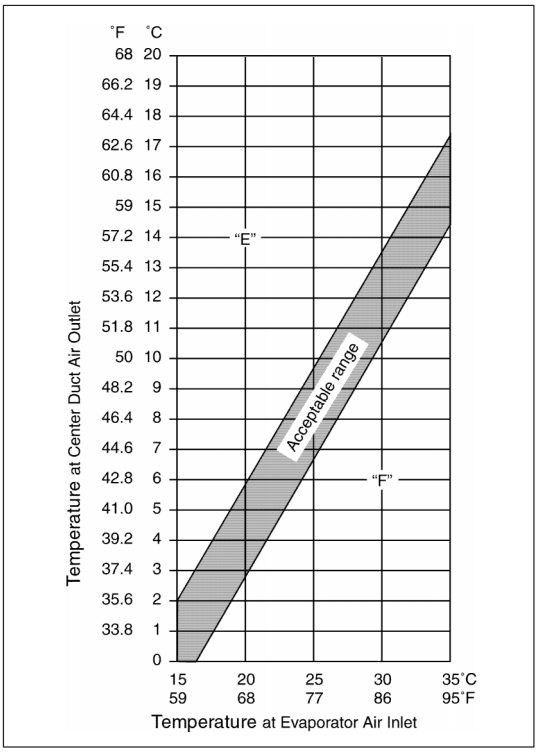

9) Check inlet port temperature-to-outlet port temperature relationship using graph.
For example, if evaporator inlet port temperature is 25°C (77°F) and center duct air outlet temperature is 8°C (46.4°F), their crossing point is within acceptable range as shown in graph.
If crossing point is out of acceptable range, diagnose trouble referring to "PERFORMANCE DIAGNOSIS TABLE".

PERFORMANCE DIAGNOSIS TABLE

NOTE:
If ambient temperature is approximately 30°C (86°F), it is possible to diagnose A/C system in detail referring to next page table.

	TESTING RESULTS	POSSIBLE CAUSE	REMEDY
HIGH PRESSURE GAUGE	Pressure high ("A" area of high side graph)	● Refrigerant overcharged ● Expansion valve frozen or clogged ● Clogged refrigerant passage of high side ● Condenser cooling fan malfunction (Insufficient cooling of condenser) ● Dirty or bent condenser fins (Insufficient cooling of condenser) ● Compressor malfunction (Insufficient oil etc.) ● Engine overheat	● Recharge ● Check expansion valve ● Clean or replace ● Check condenser cooling fan ● Clean or repair ● Check compressor ● Check engine cooling system referring to Section 6B.
	Pressure low ("B" area of high side graph)	● Insufficient refrigerant (Insufficient charge or leakage) ● Expansion valve malfunction (valve opens too wide) ● Compressor malfunction (Insufficient compression)	● Check for leakage, repair if necessary and recharge ● Check expansion valve ● Check compressor
LOW PRESSURE GAUGE	Pressure high ("C" area of low side graph)	● Expansion valve malfunction (valve opens too wide) ● Compressor malfunction (Insufficient compression)	● Check expansion valve ● Check compressor
	Pressure low ("D" area of low side graph)	● Insufficient refrigerant (Insufficient charge or leakage) ● Expansion valve malfunction (valve opens too narrow) ● Clogged refrigerant passage (crashed pipe)	● Check for leakage, repair if necessary and recharge ● Check expansion valve ● Repair or replace
THERMOMETER AT CENTER DUCT	Outlet air temperature at center duct is high (Crossing point is in area "E")	● Insufficient or excessive charge of refrigerant ● Dirty or bent A/C evaporator fins ● Air leakage from cooling (heater) unit or air duct ● Malfunctioning, switchover function of door in cooling (heater) unit ● Compressor malfunction	● Check refrigerant pressure ● Clean or repair ● Repair or replace ● Repair or replace ● Check compressor
	Outlet air temperature at center duct is low (Crossing point is in area "F")	● Insufficient air volume from center duct (Heater blower malfunction) ● Compressor malfunction	● Check blower fan motor and fan ● Check compressor

DETAIL DIAGNOSIS TABLE (AMBIENT TEMPERATURE AT 30°C (86°F))

MANIFOLD GAUGE MPa (kg/cm², psi)		CONDITION	CAUSE	CORRECTION
Lo	Hi			
0.23 – 0.35 (2.3 – 3.5, 33 – 50)	1.4 – 1.75 (14 – 17.5, 200 – 249)	Normal condition.	———	———
Negative pressure	0.5 – 0.6 (5 – 6, 71.2 – 85.3)	● The low pressure side reads a negative pressure, and the high pressure side reads an extremely low pressure. Presence of frost around tubing to and from receiver/dryer and expansion valve.	● Dust particles or water droplets are either stuck or frozen inside expansion valve, preventing the refrigerant from flowing.	● Clean expansion valve. Replace it if it cannot be cleaned. Replace receiver/dryer. Evacuate the A/C system and recharge with fresh refrigerant.
Normal: 0.23 – 0.35 (2.3 – 3.5, 33 – 50) ⇕ Abnormal: Negative pressure	Normal: 1.4 – 1.75 (14 – 17.5, 200 – 249) ⇕ Abnormal: 0.69 – 0.98 (7 – 10, 100 – 142)	● During A/C operation, the low pressure side sometimes indicates negative pressure, and sometimes normal pressure. Also high pressure side reading fluctuates between the abnormal and normal pressure.	● Expansion valve is frozen due to moisture in the system, and temporarily shuts off the refrigeration cycle.	● Replace expansion valve. Replace receiver/dryer. Evacuate A/C system and recharge with fresh refrigerant.
0.05 – 0.15 (0.5 – 1.5, 4.2 – 21.3)	0.69 – 0.98 (7 – 10, 100 – 142)	● Both low and high pressure sides indicate low readings. Continuous air bubbles are visible through sight glass. Output air is slightly cold.	● Insufficient refrigerant in system. (Refrigerant leaking)	● Using leak detector, check for leaks and repair as necessary. Recharge refrigerant to a specified amount. If the pressure reading is almost 0 when the manifold gauges are attached, check for any leaks, repair them, and evacuate the system.
0.4 – 0.6 (4 – 6, 56.9 – 85.3)		● Pressure on low pressure side is high. Pressure on high pressure side is low. Both pressure becoming equal right after A/C is turned OFF.	● Internal leak in compressor.	● Inspect compressor and repair or replace as necessary.
0.35 – 0.45 (3.5 – 4.5, 50 – 64)	1.96 – 2.45 (20 – 25, 285 – 355)	● High pressure reading on both low and high pressure sides. Air bubbles are not visible even when engine rpm is lowered.	● Overcharged A/C system. ● Faulty condenser cooling operation. ● Faulty condenser cooling fan operation.	● Adjust refrigerant to specified amount. ● Clean condenser. ● Inspect and repair condenser cooling fan.
		● High pressure reading on both low and high pressure sides. Low pressure side tubing is not cold when touched. Air bubbles are visible through sight glass.	● Presence of air in A/C system. (Improperly evacuated)	● Replace receiver/dryer. Inspect quantity of compressor oil and presence of contaminants in oil. Evacuate system and recharge with fresh refrigerant.
0.45 – 0.55 (4.5 – 5.5, 64 – 78)		● High pressure reading on both low and high pressure sides. Large amount of frost or dew on the low pressure side tubing.	● Faulty expansion valve. Refrigerant flow is not regulated properly.	● Replace expansion valve.

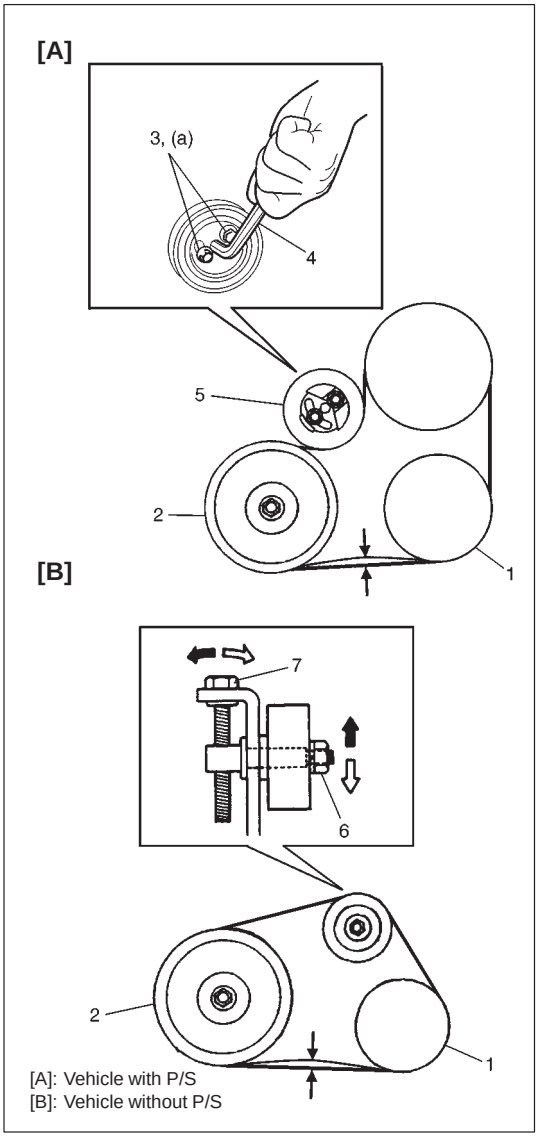

[A]: Vehicle with P/S
[B]: Vehicle without P/S

COMPRESSOR DRIVE BELT INSPECTION AND ADJUSTMENT

INSPECTION

- Check belt for wear and cracks, and replace as required.
- Check belt tension by measuring how much it deflects when pushed at intermediate point between compressor pulley (1) and crankshaft pulley (2) with about 100 N (10 kg, 22 lb) force.

"a" : 6 – 9 mm (0.24 – 0.35 in.)

If belt tension is without above specification, adjust belt tension by according to the following procedures.

ADJUSTMENT

For vehicle with P/S

1) Loosen tension pulley bolts (3) and set hexagon wrench (4) to hexagon hole.
2) Turn tension pulley (5) counterclockwise by hexagon wrench in order to obtain above specified tension.
3) Tighten tension pulley bolts (3) to specified torque.

Tightening Torque
(a): 25N·m (2.5 kg-m, 18.0 lb-ft)

For vehicle without P/S

1) Loosen tension pulley tightening nut (6).
2) Adjust belt tension by tighten or loosen tension pulley adjusting bolt (7) in order to obtain above specified tension.
3) Tighten tension pulley tightening nut (6).

ELECTRONICAL DIAGNOSIS

WIRING DIAGRAM

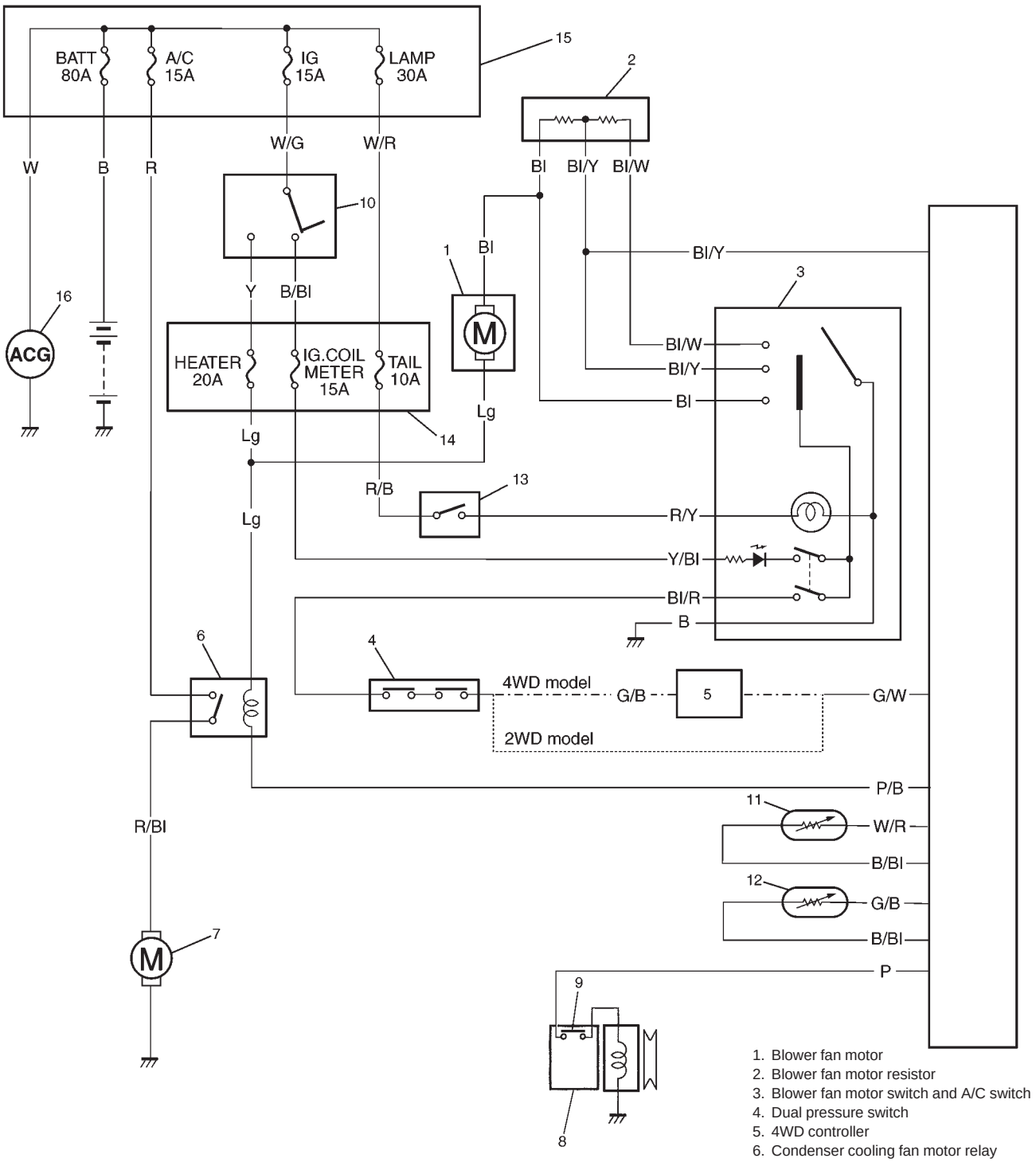

1. Blower fan motor
2. Blower fan motor resistor
3. Blower fan motor switch and A/C switch
4. Dual pressure switch
5. 4WD controller
6. Condenser cooling fan motor relay
7. Condenser cooling fan motor
8. Compressor
9. Thermal switch
10. Ignition switch
11. A/C evaporator thermistor
12. ECT sensor
13. Lighting switch
14. Circuit fuse box
15. Main fuse box
16. Generator

Fig. A

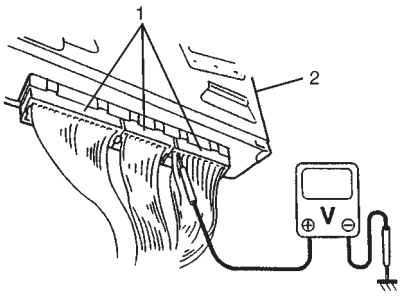

Fig. B

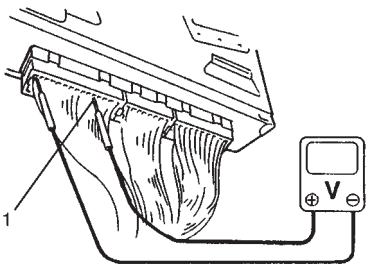

1. E19-3

A/C SYSTEM INSPECTION OF ECM AND ITS CIRCUITS

ECM and its circuits can be checked at ECM wiring couplers by measuring voltage.

CAUTION:
ECM cannot be checked by itself. It is strictly prohibited to connect voltmeter or ohmmeter to ECM with couplers disconnected from it.

Voltage Check

1) Remove ECM from vehicle by referring to "ECM (PCM) REMOVAL AND INSTALLATION" in Section 6E.
2) Connect ECM couplers (1) to ECM (2).
3) Check voltage at each terminal of couplers connected.

NOTE:
As each terminal voltage is affected by the battery voltage, confirm that it is 11V or more when ignition switch is ON.

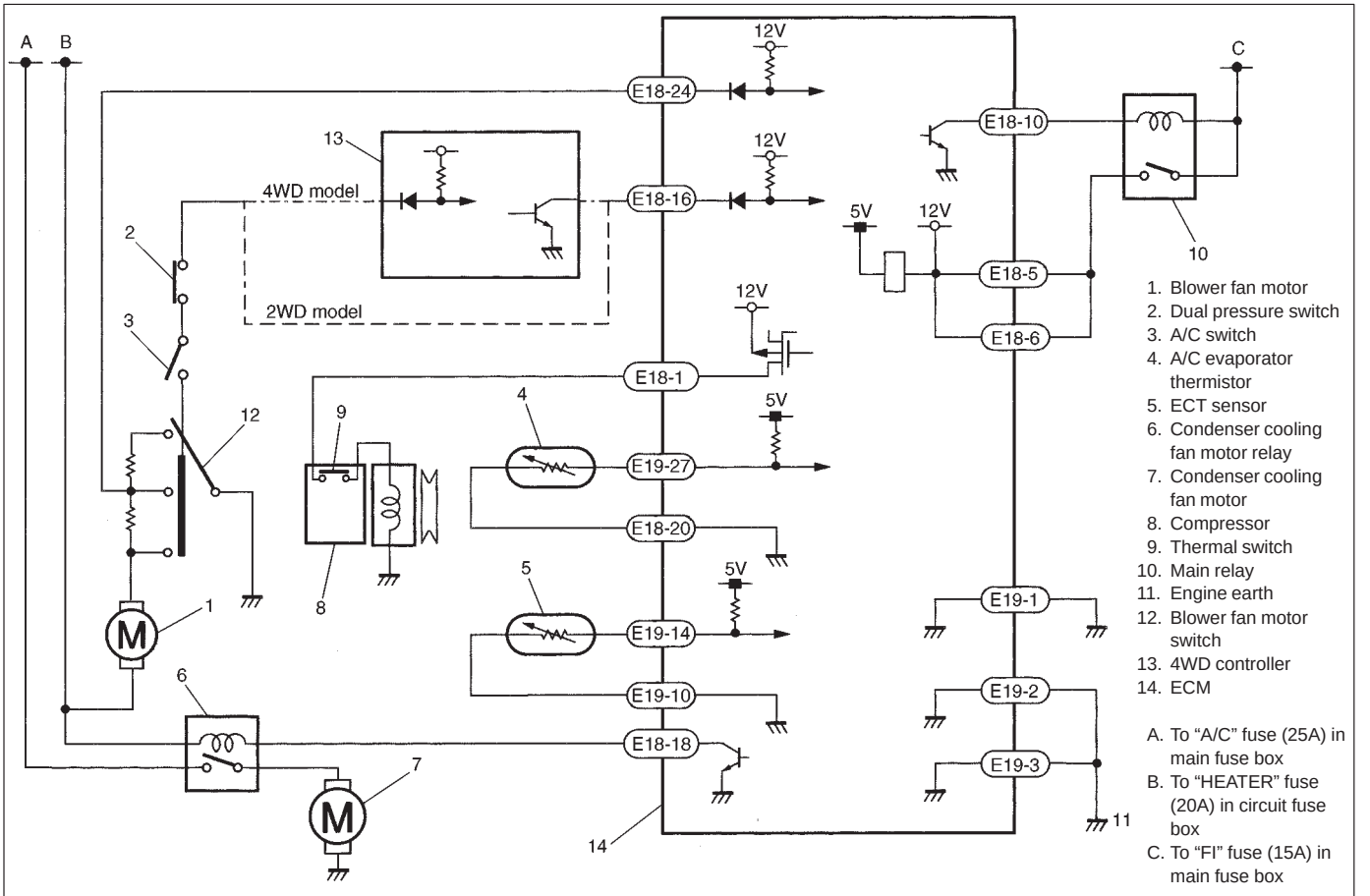

1. Blower fan motor
2. Dual pressure switch
3. A/C switch
4. A/C evaporator thermistor
5. ECT sensor
6. Condenser cooling fan motor relay
7. Condenser cooling fan motor
8. Compressor
9. Thermal switch
10. Main relay
11. Engine earth
12. Blower fan motor switch
13. 4WD controller
14. ECM

A. To "A/C" fuse (25A) in main fuse box
B. To "HEATER" fuse (20A) in circuit fuse box
C. To "FI" fuse (15A) in main fuse box

TERMINAL ARRANGEMENT OF ECM COUPLER (VIEWED FROM HARNESS SIDE)

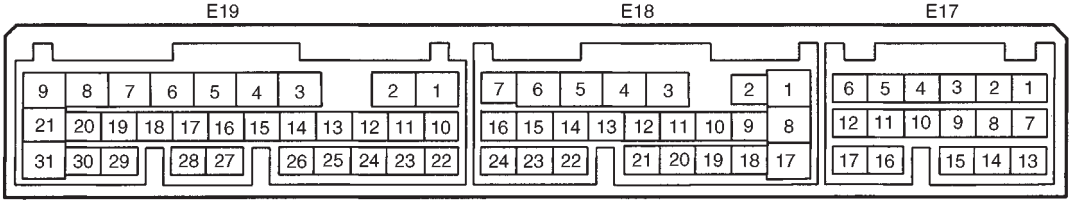

ECM VOLTAGE VALUES TABLE FOR RELATION OF A/C CONTROL

Terminal	Wire	Circuit	Measurement ground	Normal value	Condition
E18-1	P	Compressor magnet clutch relay output	Ground to engine (Fig B)	10 – 14 volt	Blower fan motor switch and A/C switch ON with engine running
				0 – 1 volts	Except the above-mentioned condition with engine running
E18-5	Bl/B	Main power supply for ECM	Ground to engine (Fig B)	10 – 14 volts	Ignition switch ON with engine stopped
E18-6	Bl/B	Main power supply for ECM	Ground to engine (Fig B)	10 – 14 volts	Ignition switch ON with engine stopped
E18-10	Bl	Main relay drive	Ground to engine (Fig B)	0.5 – 1.2 volt	Ignition switch ON with engine stopped
				0 volts	Ignition switch OFF
E18-16	G/W	A/C switch input	Ground to engine (Fig B)	12 – 15 volts	Blower fan motor switch or A/C switch OFF with engine running
				0 – 1 volt	Blower fan motor switch and A/C switch ON with engine running
				12 – 15 volts	Within several seconds after operate transfer lever between 2WD and 4WD with above condition
E18-18	P/B	Compressor cooling fan relay output	Ground to engine (Fig B)	0 – 1 volt	Blower fan motor switch and A/C switch ON or engine coolant temperature at more than 113°C (224°C) with engine running.
				12 – 15 volts	Except the above-mentioned condition with engine running
E18-20	B/Bl	Sensor ground for A/C evaporator	Ground to body (Fig A)	–0.5 – 0 volt	Engine running
E18-24	Bl/Y	Blower fan speed input	Ground to engine (Fig B)	0 – 1 volt	Blower fan motor switch 2nd or 3rd with engine running
				4 – 7 volts	Blower fan motor switch 1st with engine running
				12 – 15 volts	Blower fan motor switch and A/C switch OFF with engine running
E19-1	B	Main ground for ECM	Ground to engine (Fig A)	–0.5 – 1 volt	Engine running
E19-2	B/R	ECM ground for power circuit	Ground to engine (Fig A)	–0.5 – 1 volt	Engine running
E19-3	B/R	ECM ground for power circuit	Ground to engine (Fig A)	–0.5 – 1 volt	Engine running
E19-10	B/Bl	Sensor ground for ECT sensor	Ground to body (Fig A)	–0.5 – 1 volt	Engine running
E19-14	G/B	ECT sensor input	Ground to engine (Fig B)	0.73 – 0.83 volts (315 – 355 Ω)	Engine coolant temperature at approximately 80°C (176°F) with engine running
				0.35 – 0.45 volts (145 – 165 Ω)	Engine coolant temperature at approximately 110°C (230°F) with engine running *If the temperature is more than 113°C (232°F), compressor and condenser cooling fan should be stop (come back at less than110°C (230°F)
E19-27	W/R	A/C evaporator thermistor temperature input	Ground to engine (Fig B)	2.0 – 2.3 volts (1800 – 2200 Ω)	Evaporator thermistor temperature at approximately 25°C (77°F) with engine running
				3.5 – 3.6 volts (6300 – 7000 Ω)	Evaporator thermistor temperature at approximately 0°C (32°F) with engine running *If the temperature is less than approximately 2.5°C (36.5°F), compressor cooling fan should be stop (come back at less than approximately 4°C (39.2°F)

REFRIGERANT RECOVERY, EVACUATING AND CHARGING

WARNING:

- **Your eyes should not be exposed to refrigerant (liquid).**
  Any liquid HFC-134a (R-134a) escaping by accident shows a temperature as low as approximately –6°C (21°F) below freezing point. Should liquid HFC-134a (R-134a) get into your eyes, it may cause a serious injury. To protect your eyes against such accident, it is necessary to always wear goggles. Should it occur that HFC-134a (R-134a) strikes your eyes(s), consult a doctor immediately.
  - **Do not use your hand to rub the affected eye(s). Instead, use quantities of fresh cold water to splash it over the affected area to gradually raise temperature of such area above freezing point.**
  - **Obtain proper treatment as soon as possible from a doctor or eye specialist.**
- **Should the HFC-134a (R-134a) liquid come into contact with your skin, the affected area should be treated in the same manner as when skin is frostbitten or frozen.**
- **Refrigerant must not be handled near where welding or steam cleaning is performed.**
- **Refrigerant should be kept at a cold and dark place. It should never be stored where a high temperature is anticipated, e.g. where exposed to direct sun light, close to fire or inside vehicle (including trunk room).**
- **Avoid breathing fumes produced when HFC-134a (R-134a) is burned. Such fumes may be hazardous to health.**

OPERATION PROCEDURE FOR REFRIGERANT CHARGING

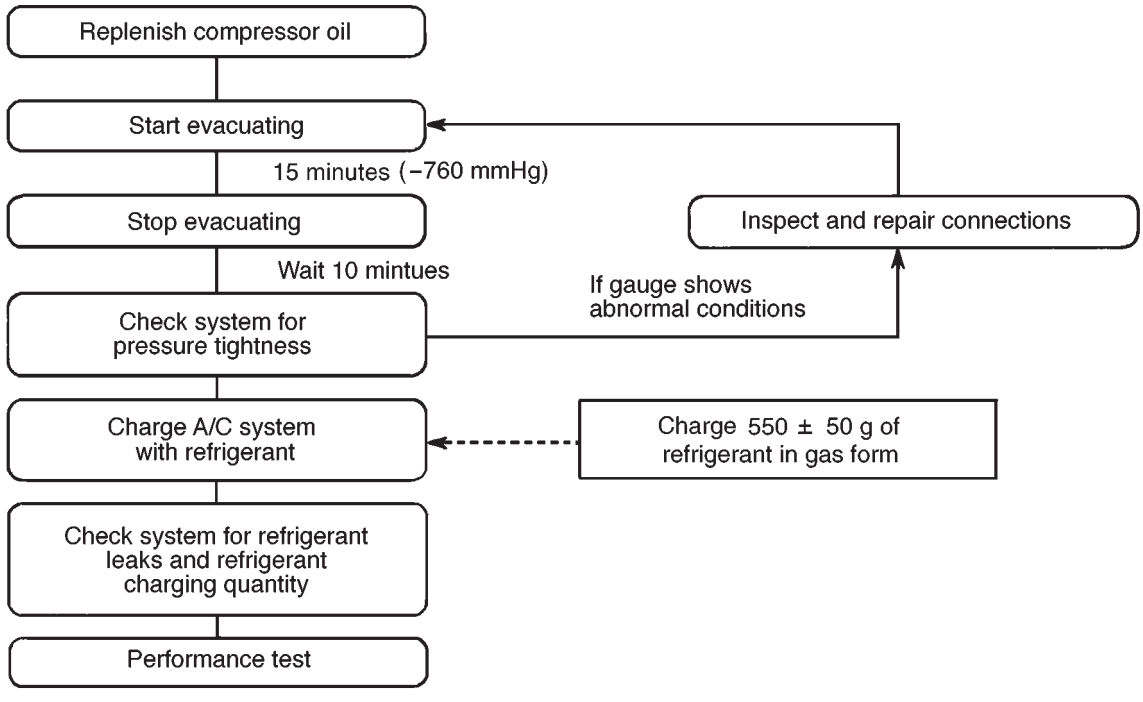

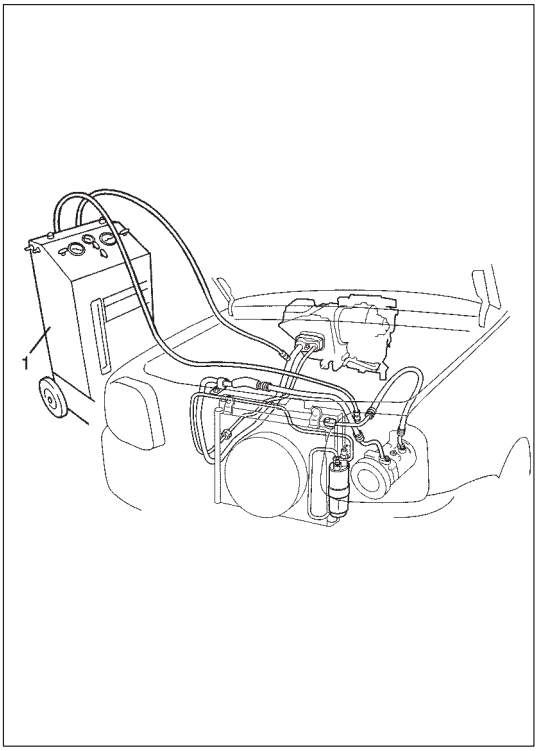

RECOVERY

REFRIGERANT RECOVERY

When discharging refrigerant out of A/C system, always recover it by using refrigerant recovery and recycling equipment (1). Discharging refrigerant HFC-134a (R-134a) into atmosphere would cause adverse effect to environments.

NOTE:

- **After recover refrigerant from system, the amount of removed compressor oil must be measured for replenishing compressor oil.**
- **When handling recovery and recycling equipment, be sure to follow the instruction manual for the equipment.**

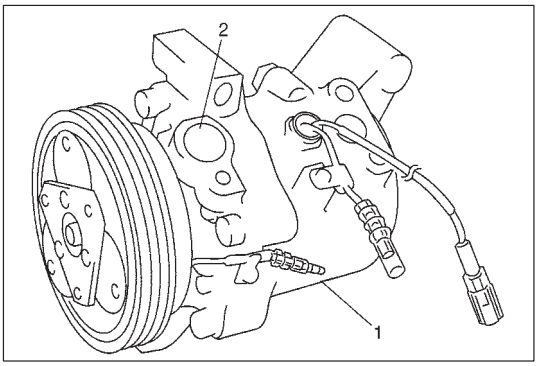

REPLENISHING COMPRESSOR OIL

It is necessary to replenishing specified amount of compressor oil to compressor (1) from compressor suction side hole (2) before evacuating and charging refrigerant.

Compressor oil: 99000-99088-00D0

When charging refrigerant only

When charging refrigerant without replacing any component part, replenish the same amount of measured oil when recover refrigerant (if not measure, replenish 30 cc oil).

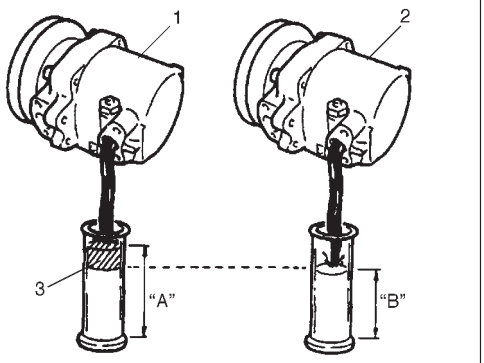

1. New compressor
2. Removed compressor
3. Excess oil ("A"–"B")

When replacing compressor

Compressor oil is sealed in each new compressor by the amount required for A/C system. Therefore, when using a new compressor for replacement, drain oil from it by the amount calculated as follows.

"C" = "A" – "B"
"C": Amount of oil to be drained
"A": Amount of oil sealed in a new compressor
"B": Amount of oil remaining in removed compressor

When replacing other part

Replenish the following amount of oil to compressor.

Replaced part	Amount of compressor oil to be replenished
Evaporator	30 cm^3 (30 cc, 1.83 cu-in)
Condenser	30 cm^3 (30 cc, 1.83 cu-in)
Receiver/dryer	20 cm^3 (20 cc, 1.22 cu-in)
Hoses	10 cm^3 (10 cc, 0.61 cu-in) each
Pipes	10 cm^3 (10 cc, 0.61 cu-in) each

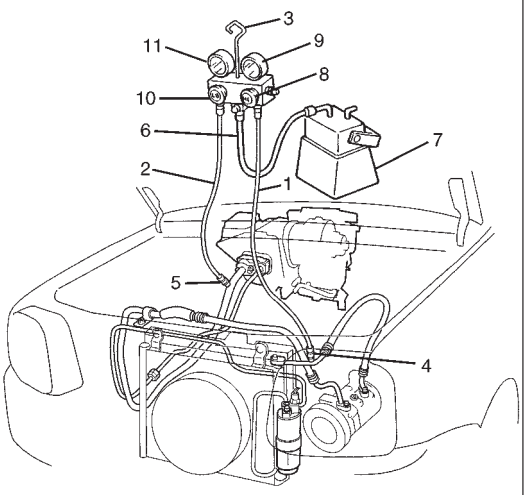

EVACUATING

EVACUATING PROCEDURE

Whenever opened (exposed to atmospheric air), A/C system must be evacuated by using a vacuum pump.

NOTE:
Do not evacuate before recovering refrigerant and replenishing compressor oil.

1) Connect high charging hose (1) and low charging hose (2) of manifold gauge set (3) respectively as follows:
   High charging hose (1) ➡ High pressure charging valve (4) on discharge hose
   Low charging hose (2) ➡ Low pressure charging valve (5) on suction hose
2) Attach center charging hose (6) of manifold gauge set (3) to vacuum pump (7).
3) Operate vacuum pump (7), and then open discharge side valve (Hi) (8) of manifold gauge set (3).
   If there is no blockage in the system, there will be an indication on high pressure gauge (9).
   In this case, open the other side valve (Lo) (10) of the set and repair the system.
4) Approximately 10 minutes later, low pressure gauge (11) should show a vacuum lower than –760 mmHg providing no leakage exists.

   NOTE:
   - **If the system does not show a vacuum below –760 mmHg, close both valves, stop vacuum pump and watch movement of low pressure gauge.**
   - **Increase in the gauge reading suggests existence of leakage. In this case, repair the system before continuing its evacuation.**
   - **If the gauge shows a stable reading (suggesting no leakage), continue evacuation.**

5) Evacuation should be carried out for a total of at least 15 minutes.
6) Continue evacuation until low pressure gauge (9) indicates a vacuum less than –760 mmHg, and then close both valves (8), (10).
7) Stop vacuum pump (7). Disconnect center charging hose (6) from pump inlet. Now, the system is ready for charging refrigerant.

CHARGING

CAUTION:
- **Always charge through low pressure side of A/C system at after the initial charging is performed from the high pressure side with the engine stopped.**
- **Never charge to high pressure side of A/C system with engine running.**
- **Do not charge while compressor is hot.**
- **When installing tap valve to refrigerant container to make a hole there through, carefully follow directions given by manufacturer.**
- **A pressure gauge should always be used before and during charging.**
- **The refrigerant container should be emptied of refrigerant when discarding it.**
- **The refrigerant container should not be heated up to 40°C (104°F) or over.**
- **Refrigerant container should not be reversed in direction during charging. Reversing in direction causes liquid refrigerant to enter compressor, causing troubles, such as compression of liquid refrigerant and the like.**

NOTE:
The air conditioning system contains HFC-134a (R-134a).
Described here is a method to charge the air conditioning system with refrigerant from the refrigerant service container.
When charging refrigerant recovered by using the refrigerant and recycling equipment (when recycling refrigerant), follow the procedure described in the equipment manufacturer's instruction manual.

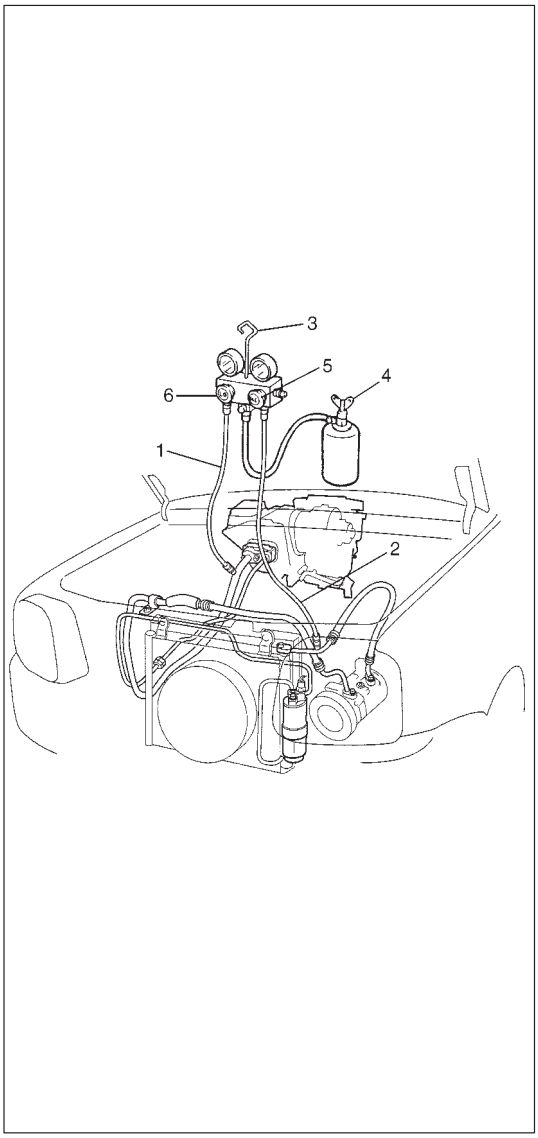

CHARGING PROCEDURE

The initial charging of the A/C system is performed from the high pressure side with the engine stopped.
And next, this method must be followed by charging from the low pressure side with the engine running.

1) Check to make sure that hoses are routed properly after evacuating the system.
2) Connect Low charging hose (1) and High charging hose (2) of the manifold gauge set (3) in position. Thus open refrigerant container valve (4) to purge the charging line.
3) Open the high pressure side valve (5) and charge refrigerant to system.
4) After a while, open the low pressure side valve (6) and close the high pressure side valve (5).

WARNING:
Make sure that high pressure side valve is closed securely.

5) Start engine and keep engine speed at 1500 r/min. Then, operate air conditioning.
6) Charge A/C system with refrigerant in vapor state. At this time, refrigerant container should be held upright.

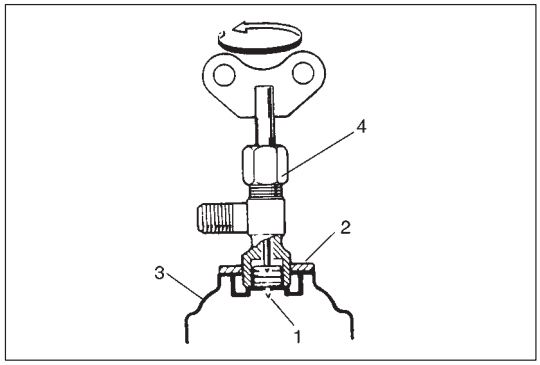

7) When refrigerant container (3) is emptied, use the following procedure to replace it with a new refrigerant container (3).
   a) Close low pressure valve.
   b) Replace empty container (3) with a refrigerant container which has been charged with refrigerant. When using refrigerant container tap valve (4), use the following procedure for replacement.
      i) Retract needle (1) and remove refrigerant container tap valve (4) by loosening its plate nut (2).
      ii) Install previously-removed refrigerant container tap valve (4) to a new refrigerant container (3).

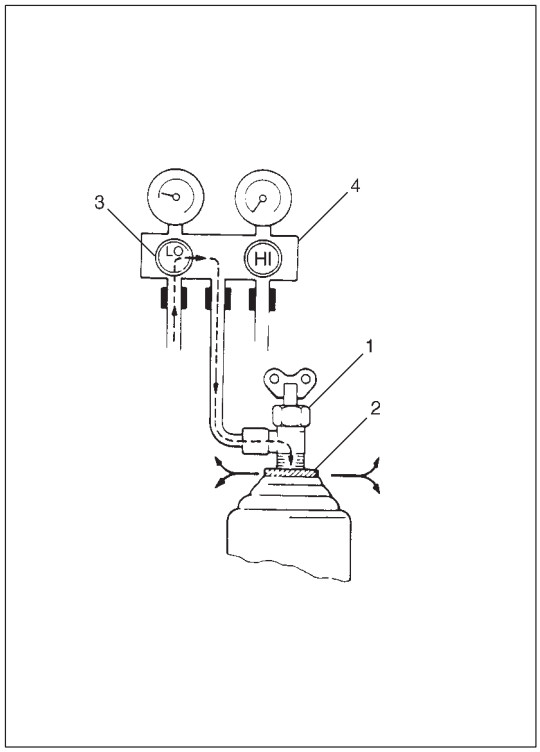

   c) Purge any air existing in center charging hose
      When using refrigerant container tap valve, use the following procedure to purge air.
      i) Once fully tighten refrigerant container tap valve (1), and then loosen (open) plate nut (2) slightly.
      ii) Open low pressure side valve (3) of manifold gauge set (4) a little.
      iii) As soon as refrigerant comes out with a “hiss” through a clearance between refrigerant container and tap valve, tighten plate nut (2) as well as low pressure side valve (3).
      iv) Turn handle of tap valve (1) clockwise so that its needle is screwed into the new container to make a hole for refrigerant flow.

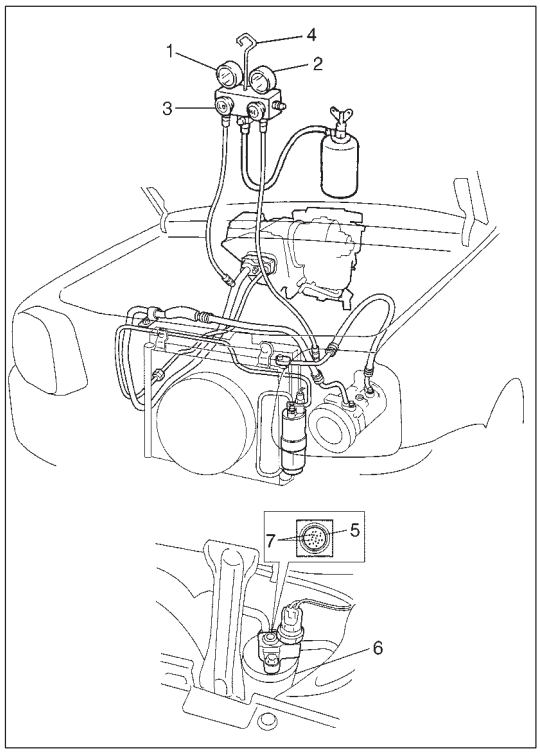

8) After the system has been charged with specified amount (500 – 600 g) of refrigerant or when low pressure gauge (1) and high pressure gauge (2) have indicated the following specified amount, close low pressure side valve (3) on manifold gauge set (4). At this time, look into the sight glass (5) of receiver/dryer (6) and check that there are no bubbles (7) in it, which means that the system is fully charged.

Gauges should read as follows when ambient temperature is 30°C (86°F).	
Pressure on high pressure gauge	**1400 – 1750 kPa** **14.0 – 17.5 kg/cm^2** **199.1 – 248.9 psi**
Pressure on low pressure gauge	**230 – 350 kPa** **2.3 – 3.5 kg/cm^2** **32.7 – 49.8 psi**

REMOVING MANIFOLD GAUGE SET

When A/C system has been charged with a specified amount of refrigerant, remove manifold gauge set as follows:

1) Close low pressure side valve of manifold gauge set. (The high pressure side valve is closed continuously during the process of charging.)
2) Close refrigerant container valve.
3) Stop engine.
4) Using shop rag, remove charging hoses from service valves. This operation must be performed rapidly.

> **WARNING:**
> **High pressure side is naturally under high pressure. So, care must be used to protect your eyes and skin.**

5) Put caps on service valves.

LEAK TEST

Whenever a refrigerant leak is suspected in the system or any service operation has been performed which may result in disturbing lines or connections, it is advisable to test for leaks.
Common sense should be used in performing any refrigerant leak test, since the need and extent of any such test will, in general, depend upon the nature of a complaint and the type of a service performed on the system.

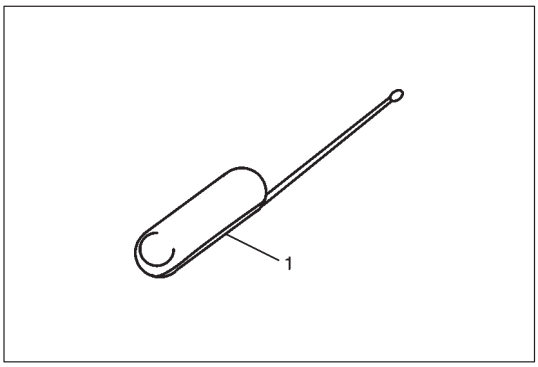

LIQUID LEAK DETECTOR

There are a number of fittings and places throughout the air conditioning system where a liquid leak detector solution may be used to pinpoint refrigerant leaks.
By merely applying the solution to the area in question with a swab, such as attached to the cap of a vial, bubbles will form within seconds if there is a leak.
For confined areas, such as sections of the evaporator and condenser, an electronic (refrigerant) leak detector (1) is more practical for determining leaks.

ON-VEHICLE SERVICE

SERVICE PRECAUTION

When servicing air conditioning system, note the following instructions.

REFRIGERANT LINE

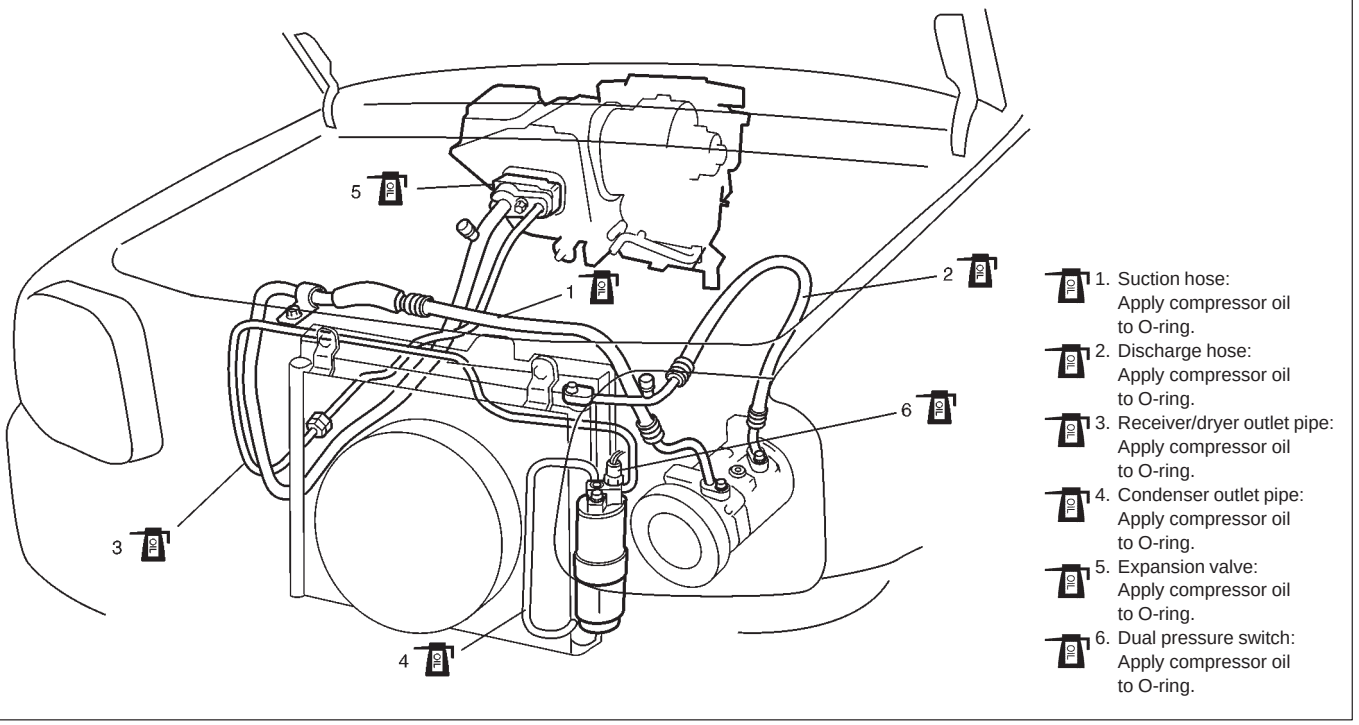

- Never use heat for bending pipes. When bending a pipe, try to make its bending radius as slight as possible.
- Keep internal parts of air conditioning free from moisture and dirt. When disconnecting any line from system, install a blind plug or cap to the fitting immediately.
- When connecting hoses and pipes, apply a few drops of compressor oil to seats of coupling nuts and O-ring.
- When tightening or loosening a fitting, use two wrenches, one for turning and the other for support.
- Tighten flared nuts by the following specified torque.

Tightening Torque (Flared Nut Used for)
8 mm pipe: 13 N·m (1.3 kg-m, 9.5 lb-ft)
12 mm pipe: 23 N·m (2.3 kg-m, 16.6 lb-ft)
14.5 mm pipe: 33 N·m (3.3 kg-m, 23.8 lb-ft)

- Route drain hose so that drained water does not make any contact to vehicle components.
- Before evacuating and charging refrigerant, replenish specified amount of compressor oil to compressor suction side by referring to “REPLENISHING COMPRESSOR OIL” in this section.

HANDLING REFRIGERANT HFC-134a (R-134a)

- Always wear goggles to protect your eyes.
- Avoid you direct contact to liquid refrigerant.
- Do not heat refrigerant container higher than 40°C (104°F).
- Do not discharge refrigerant into atmosphere.
- Do not allow liquid refrigerant to touch bright metals. Refrigerant combined with moisture is corrosive and will tarnish surfaces of bright metals including chrome.

WARNING:
Should refrigerant HFC-134a (R-134a) strike your eye(s), consult a doctor immediately.

- **Do not use your hand to rub affected eye(s). Instead, use quantities of fresh cold water to splash it over affected area to thus gradually raise its temperature above the freezing point.**
- **Obtain proper treatment as soon as possible from a doctor or eye specialist. Should liquid refrigerant HFC-134a (R-134a) get on your skin, such affected part should be treated in the same manner as when skin is frostbitten or frozen.**

CAUTION:
The air conditioning system of this vehicle uses refrigerant HFC-134a (R-134a).
None of refrigerant, compressor oil and component parts is interchangeable between two types of A/C: one using refrigerant HFC-134a (R-134a) and the other using refrigerant CFC-12 (R-12).
Be sure to check which refrigerant is used before any service work including inspection and maintenance. For identification between these two types, refer to "REFRIGERANT TYPE" in this section.
When replenishing or changing refrigerant and compressor oil and when replacing parts, make sure that the material or the part to be used is appropriate to the A/C installed in the vehicle being service. Use of incorrect one will result in leakage of refrigerant, damage in parts or other faulty condition.

CONDENSER ASSEMBLY

CAUTION:
Be careful not to damage condenser fins. If condenser fin is bent, straighten it by using flat head screwdriver or pair of pliers.

INSPECTION

Check the following.

- Check clog of condenser fins.
  If, any clogs are found, condenser fins should be washed with water, and should be dried with compressed air.
- Check condenser fins for leakage and breakage.
  If any defects are found, repair or replace condenser.
- Check condenser fittings for leakage.
  If any defects are found, repair or replace condenser.

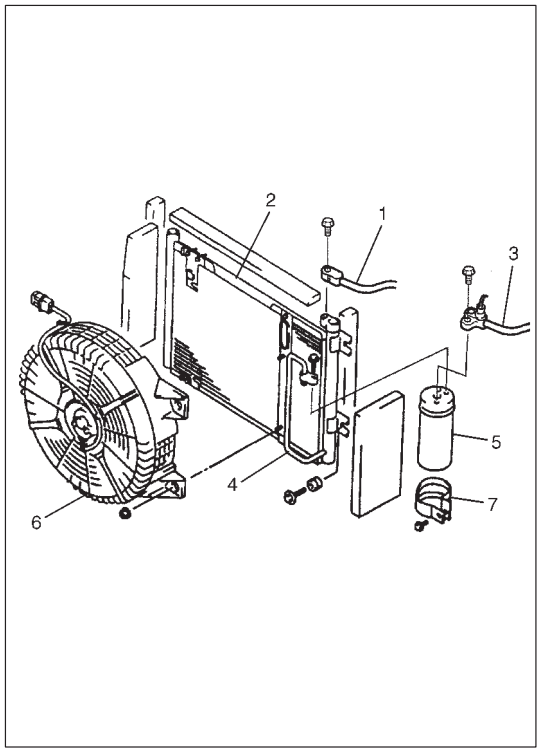

REMOVAL

1) Disconnect negative (–) cable at battery.
2) Recover refrigerant from A/C system by referring to "RECOVERY" in this section.

   NOTE:
   The amount of removed compressor oil must be measured for replenishing compressor oil.

3) Remove front bumper referring to "FRONT BUMPER" in Section 8.
4) Disconnect A/C condenser cooling fan motor and dual pressure switch connectors.
5) Remove radiator mounting bolts.
6) Disconnect discharge hose (1) from condenser (2).
7) Disconnect receiver/dryer outlet hose (3) and condenser outlet pipe (4) from receiver/dryer (5).
8) Remove condenser cooling fan assembly (6) from condenser (2).
9) Remove receiver/dryer (5) with its bracket (7) from condenser (2).
10) Remove condenser (2) from radiator.

INSTALLATION

Reverse removal procedure to install condenser, and then noting the following instructions.

- Replenish specified amount of compressor oil to compressor suction side by referring to "REPLENISHING COMPRESSOR OIL" in this section.
- Evacuate and charge refrigerant by referring to "EVACUATING" and "CHARGING" in this section.

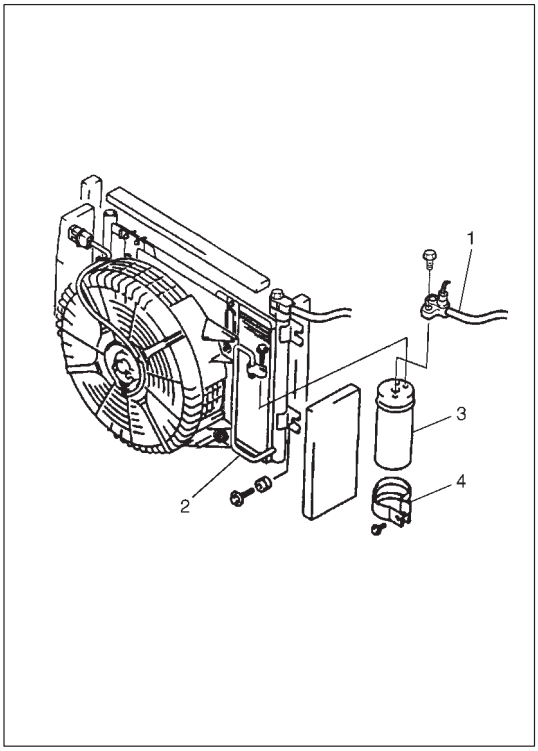

RECEIVER/DRYER

REMOVAL

1) Recover refrigerant from A/C system by referring to “RECOVERY” in this section.

   NOTE:
   The amount of removed compressor oil must be measured for replenishing compressor oil.

2) Remove front bumper referring to “FRONT BUMPER” in Section 8.
3) Disconnect receiver/dryer outlet hose (1) and condenser outlet pipe (2) from receiver/dryer (3).
4) Remove receiver/dryer (3) with its bracket (4).

INSTALLATION

Reverse removal procedure to install receiver/dryer, and then noting the following instructions.

- Replenish specified amount of compressor oil to compressor suction side by referring to “REPLENISHING COMPRESSOR OIL” in this section.
- Evacuate and charge refrigerant by referring to “EVACUATING” and “CHARGING” in this section.

CONDENSER COOLING FAN ASSEMBLY

ASSEMBLY

CAUTION:
Be careful not to damage condenser fins. If condenser fin is bent, straighten it by using flat head screwdriver or pair of pliers.

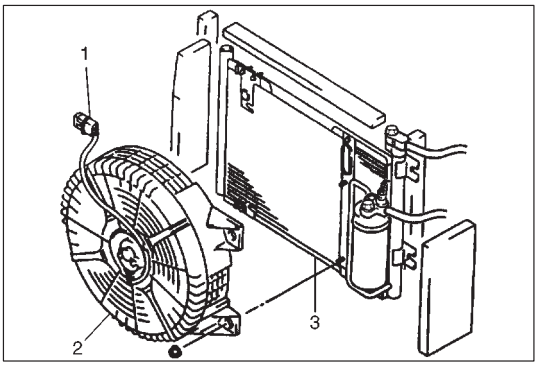

REMOVAL

1) Remove front bumper referring to “FRONT BUMPER” in Section 8.
2) Disconnect condenser cooling fan motor connector (1).
3) Remove radiator mounting bolts.
4) Remove condenser cooling fan assembly (2) from condenser (3).

INSTALLATION

Reverse removal procedure for installation.

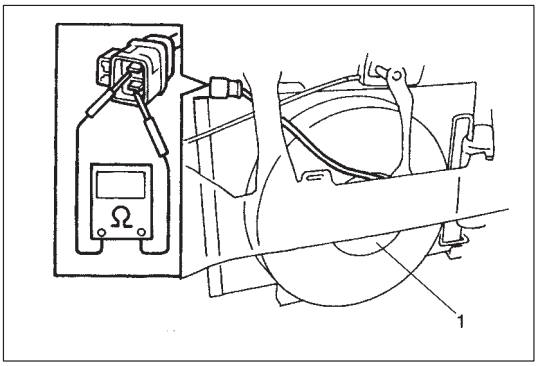

INSPECTION

1) Check continuity between each two terminals about the condenser cooling fan motor (1).
   If check results are no continuity, replace condenser cooling fan motor.

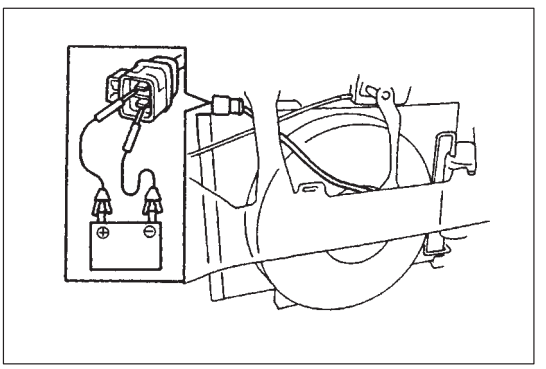

2) Connect battery to condenser cooling fan motor as shown in figure, then check that the condenser cooling fan motor operates smoothly.

   Reference current : approximately 7.5 A at 12 V

COOLING UNIT (EVAPORATOR)

CAUTION:
Be careful not to damage A/C evaporator fins. If A/C evaporator fin is bent, straighten it by using flat head screwdriver or pair of pliers.

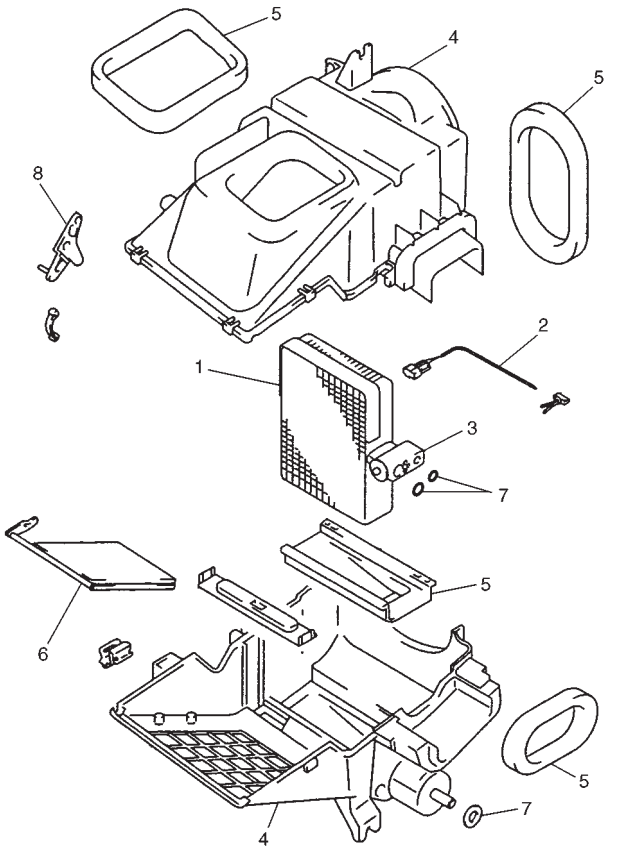

1. A/C evaporator
2. A/C evaporator thermistor (A/C evaporator temperature sensor)
3. Expansion valve
4. Evaporator case
5. Packing
6. Air inlet door
7. O-ring
8. Door link

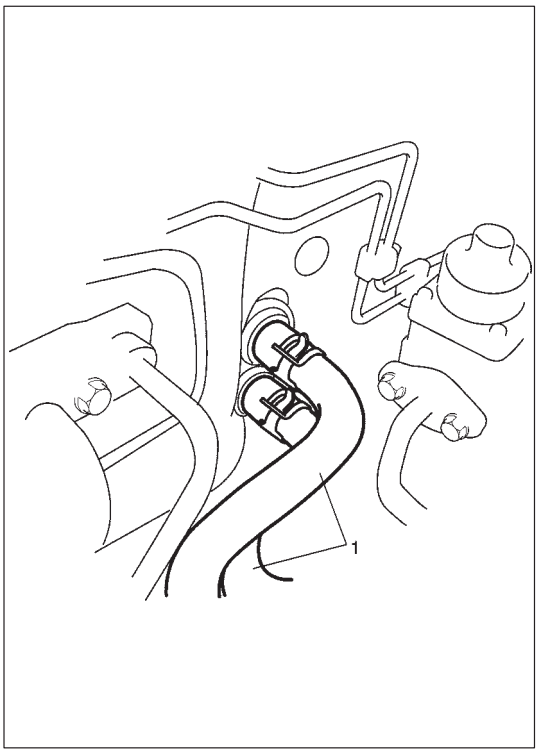

REMOVAL

1) Disconnect negative (–) cable at battery.
2) Recover refrigerant from A/C system by referring to “RECOVERY” in this section.

   NOTE:
   The amount of removed compressor oil must be measured for replenishing compressor oil.

3) Disable air bag system referring to “DISABLING AIR BAG SYSTEM” in Section 10B. (if equipped)
4) Remove instrument panel referring to “INSTRUMENT PANEL” in Section 9.

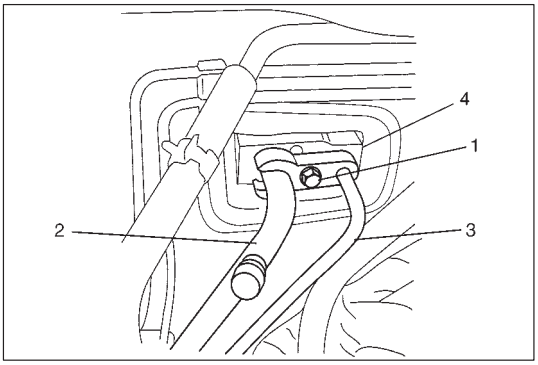

5) Remove attaching bolt (1).
6) Disconnect suction hose (2) and receiver/dryer outlet pipe (3) from expansion valve (4).

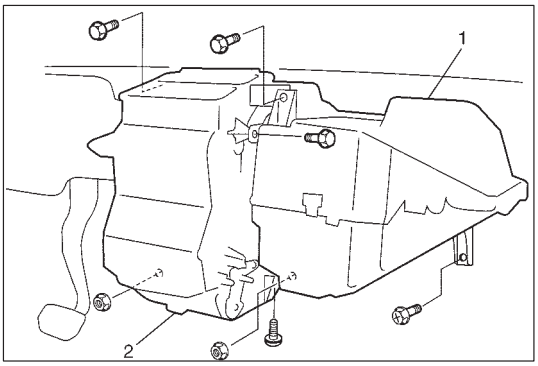

7) Remove cooling unit (1) with heater unit (2) from vehicle body.
8) Remove cooling unit (1) from heater unit (2).

INSPECTION

Check the following.

- Check clog of A/C evaporator fins.
  If any clogs are found, A/C evaporator fins should be washed with water, and should be dried with compressed air.
- Check A/C evaporator fins for leakage and breakage.
  If any defects are found, repair or replace A/C evaporator.
- Check A/C evaporator fittings for leakage.
  If any defects are found, repair or replace A/C evaporator.

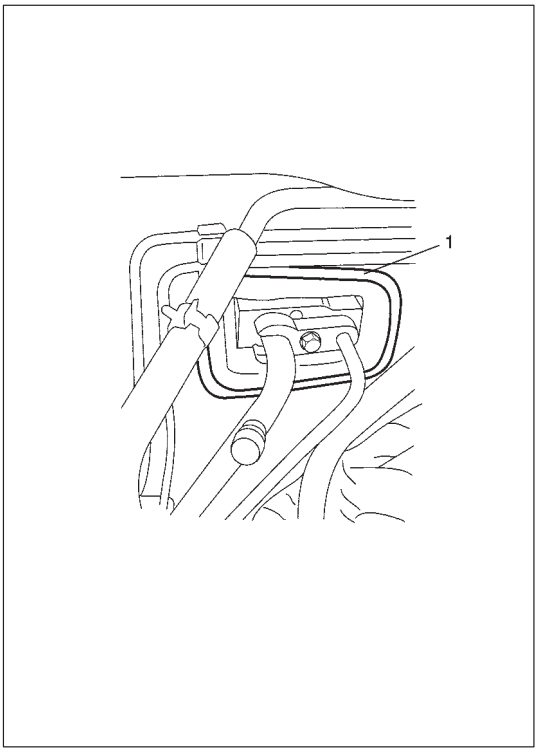

INSTALLATION

Reverse removal procedure to install cooling unit, and then noting the following instructions.

- If A/C evaporator thermistor removed, its should be reinstalled in original position.
- Install uniformly the packing (1) to installation hole.
- Replenish specified amount of compressor oil to compressor suction side by referring to “REPLENISHING COMPRESSOR OIL” in this section.
- Evacuate and charge refrigerant by referring to “EVACUATING” and “CHARGING” in this section.
- Adjust mode control cable, temperature control cable and fresh air control cable by referring to “HEATER CONTROL LEVER ASSEMBLY” in Section 1A.
- Enable air bag system referring to “ENABLE AIR BAG SYSTEM” in Section 10B. (if equipped)

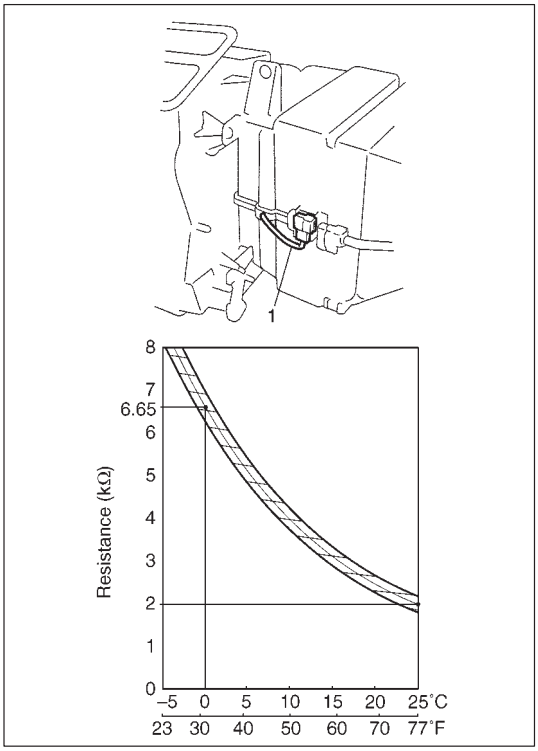

A/C EVAPORATOR THERMISTOR (A/C EVAPORATOR TEMPERATURE SENSOR)

INSPECTION

Check resistance between terminals for A/C evaporator thermistor (1).

Sensor Temperature (°C (°F))	Resistance (kΩ)
0 (32)	6.4 – 7.0
25 (77)	1.8 – 2.2

If check results are as not specified, replace thermistor.

NOTE:
When A/C evaporator thermistor (1) removed, its should be re-installed in original position.

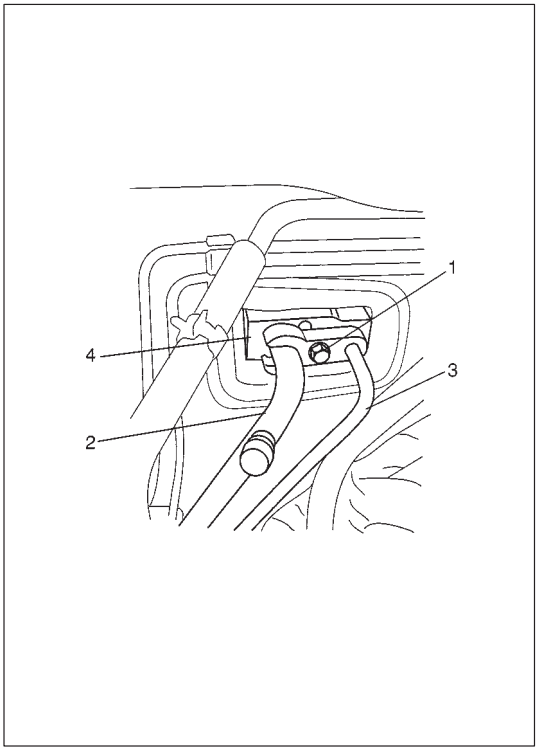

EXPANSION VALVE

REMOVAL

1) Disconnect negative (–) cable at battery.
2) Recover refrigerant from A/C system by referring to "RECOVER" in this section.

   NOTE:
   The amount of removed compressor oil must be measured for replenishing compressor oil.

3) Remove attaching bolt (1).
4) Remove suction hose (2) and receiver dryer outlet pipe (3) from expansion valve (4).
5) Remove expansion valve (4).

INSTALLATION

Reverse removal procedure for installation, and then note the following instructions.

- Replenish specified amount of compressor oil to compressor suction side by referring to "REPLENISHING COMPRESSOR OIL" in this section.
- Evacuate and charge refrigerant by referring to "EVACUATION" and "CHARGING" in this section.

INSPECTION

Refer to "PERFORMANCE DIAGNOSIS" in this section.

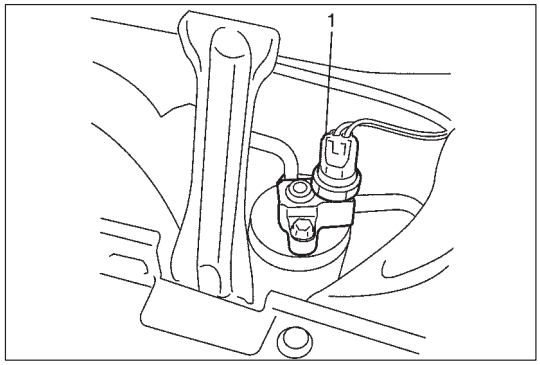

DUAL PRESSURE SWITCH

INSPECTION

1) Check dual pressure switch (1) for continuity at normal temperature (approximately 25°C (77°F)) when A/C system has a proper charge of refrigerant and A/C system (compressor) is under operation. In each of these cases, switch should show proper continuity.

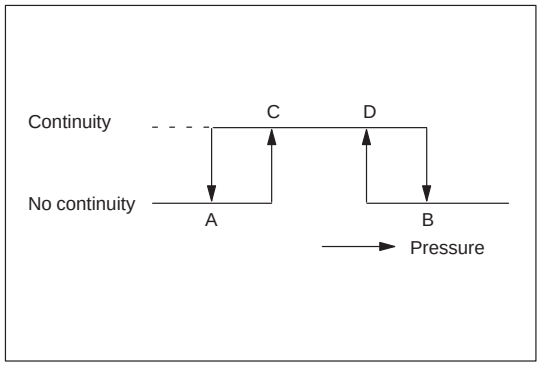

2) Check switch for continuity at specified pressure as shown.

A: Approximately 195 kPa (1.95 kg/cm^2, 27.5 psi)
B: Approximately 3140 kPa (31.4 kg/cm^2, 446.5 psi)
C: Approximately 225 kPa (2.25 kg/cm^2, 32.0 psi)
D: Approximately 2550 kPa (25.5 kg/cm^2, 362.5 psi)

Tightening torque for dual pressure switch
10 N·m (1.0 kg-m, 7.0 lb-ft)

A/C SWITCH

REMOVAL AND INSTALLATION

Refer to “HEATER CONTROL LEVER ASSEMBLY” in Section 1A.

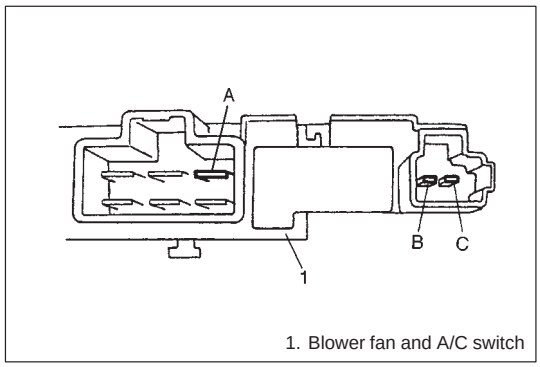

1. Blower fan and A/C switch

INSPECTION

- Press A/C switch button and check if there is continuity between terminals “A” and “B”.
- With battery voltage (+) connected to terminal “C” and (–) to terminal “A”, press A/C Switch button and blower fan switch to “Hi” (3rd position).
  Check if indicator lamp lights.

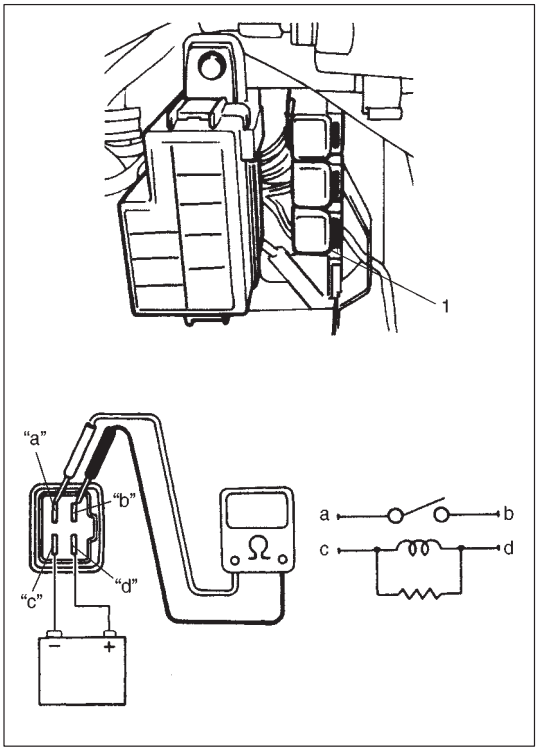

CONDENSER COOLING FAN MOTOR RELAY

INSPECTION

1) Disconnect negative (–) cable at battery.
2) Remove condenser cooling fan motor relay (1) from vehicle.
3) Check that there is no continuity between terminal "a" and "b".
   If there is continuity, replace relay.
4) Check that there is continuity between terminals "a" and "b" when battery is connected to terminal "c" and "d".
   If there is no continuity, replace relay.

COMPRESSOR

REMOVAL

1) Run engine at idle speed with air conditioning ON for 10 minutes. After that stop the engine.
2) Disconnect negative (–) cable at battery.
3) Recover refrigerant from refrigeration system by referring to "RECOVERY" in this section.

   NOTE:
   The amount of removed compressor oil must be measured for replenishing compressor oil.

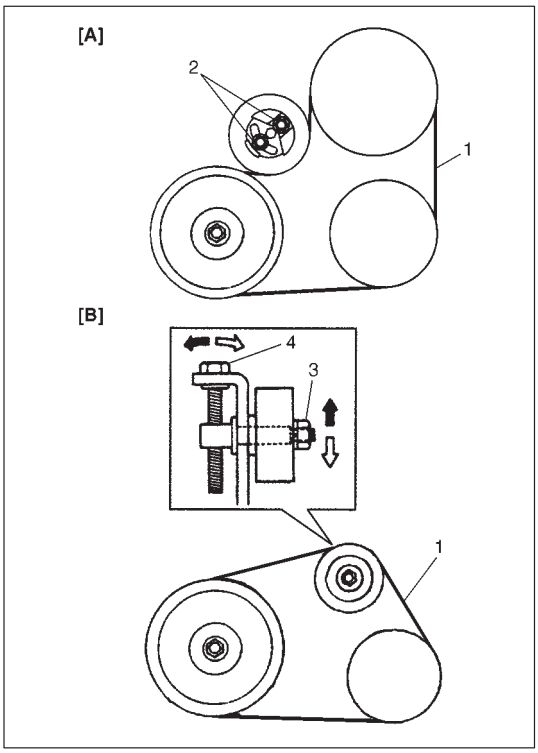

4) Remove compressor drive belt (1) as follows.
   For vehicle with P/S
   Loosen tension pulley bolts (2).
   For vehicle without P/S
   Loosen tension pulley tightening bolt (3) and adjusting bolt (4).
5) Disconnect thermal switch connector.
6) Disconnect suction and discharge hoses from compressor.

   NOTE:
   Cap open fittings immediately to keep moisture out of system.

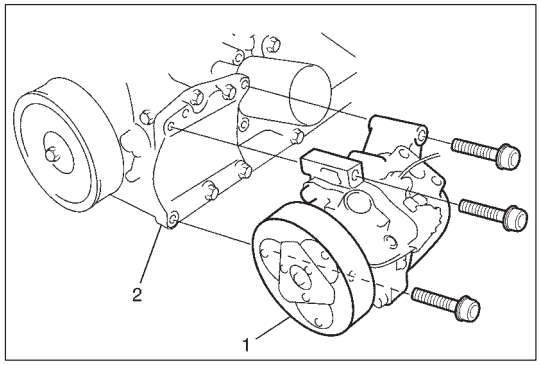

7) Remove compressor (1) from its bracket (2).

NOTE:
If compressor is replaced, drain oil from removed compressor. And then, measure its amount.

INSTALLATION

Reverse removal procedure for installation, and then noting the following instructions.

- Replenish specified amount of compressor oil to compressor suction side by referring to “REPLENISHING COMPRESSOR OIL” in this section.
- Evacuate and charge system by referring to “RECOVERY” in this section.
- Adjust drive belt tension by referring to “COMPRESSOR DRIVE BELT INSPECTION AND ADJUSTMENT” in this section.

MAGNET CLUTCH

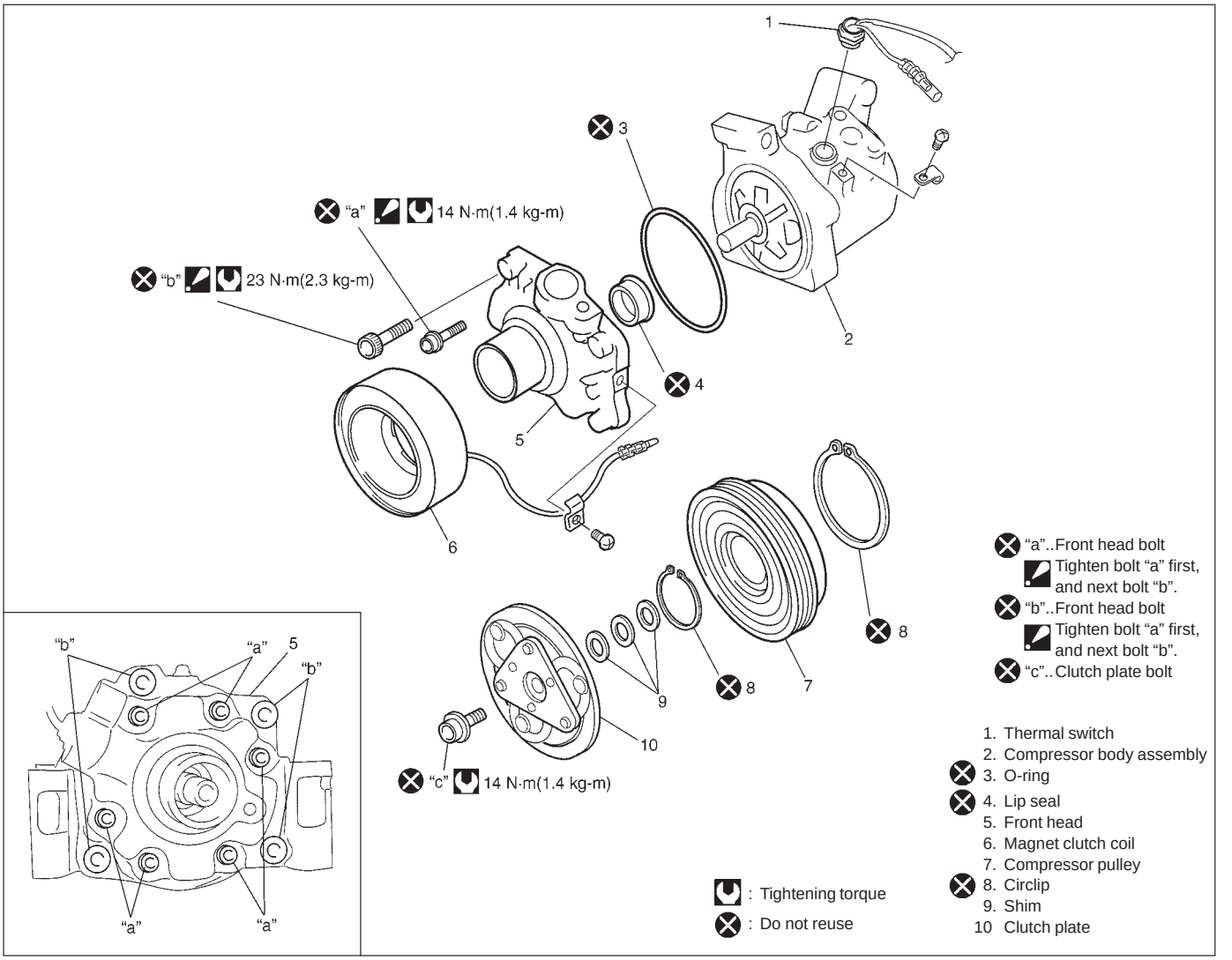

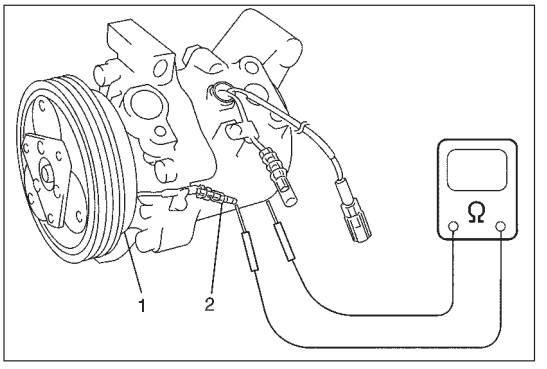

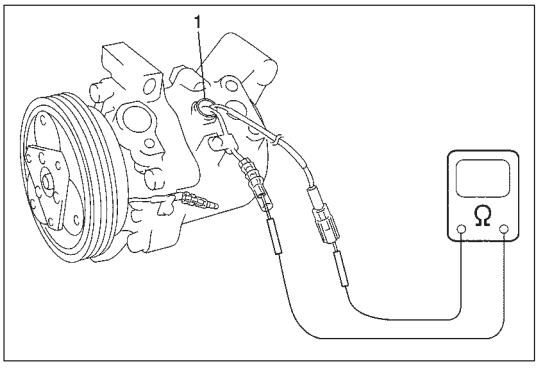

INSPECTION

- Check clutch plate and clutch pulley for leaks of compressor oil.
- Check clutch bearing of compressor pulley for noise, wear and grease leakage.
- Measure resistance of magnet clutch coil (1) between magnet clutch lead wire (2) and compressor body assembly.
  If measured resistance is not within tolerance, replace magnet clutch coil.

  Standard resistance: 3.4 – 4.1Ω (at 20°C (68°F))

- Check thermal switch (1) for continuity using ohmmeter.
  If it is no continuity, replace it.

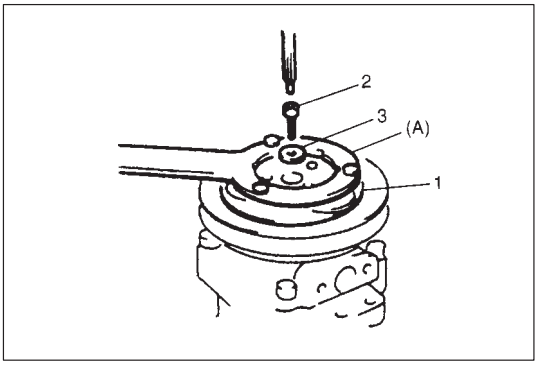

REMOVAL

1) Remove compressor from vehicle referring to “COMPRESSOR” in this section.
2) Fix clutch plate (1) with special tool, and remove clutch plate bolt (2) and washer (3).

Special Tool
(A): 09991-06020

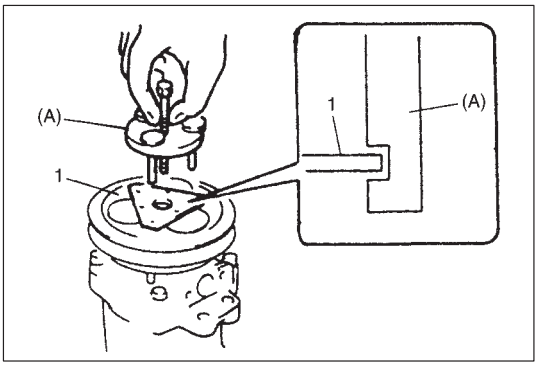

3) Remove clutch plate (1) using special tool.

Special Tool
(A): 09991-06030

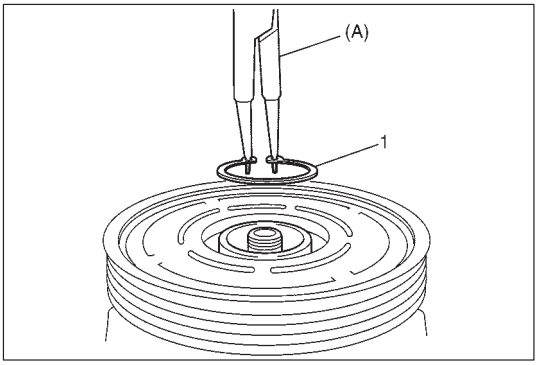

4) Remove circlip (1) using special tool.

Special Tool
(A): 09900-06107

5) Remove magnet clutch lead wire clamp screw, and disconnect magnet clutch lead wire.

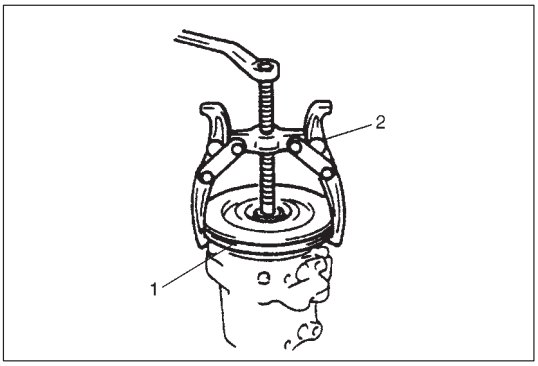

6) Remove magnet clutch pulley (1) by using a puller (2).

NOTE:
Be careful not to damage pulley part.

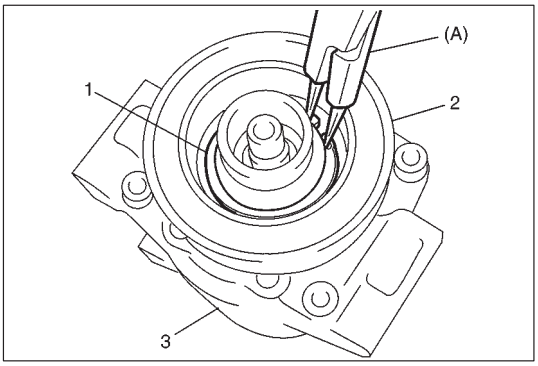

7) Remove snap ring (1) using special tool.

Special Tool
(A): 09900-06107

8) Remove magnet clutch coil (2) from compressor body assembly (3).

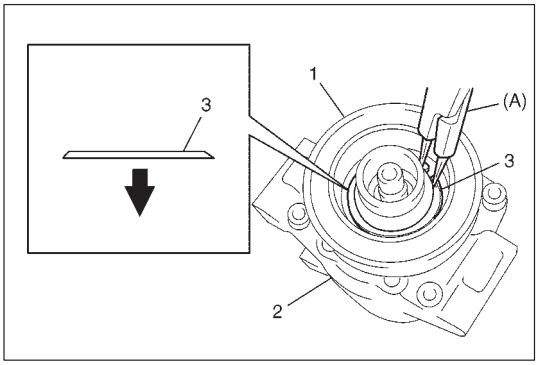

INSTALLATION

1) Install magnet clutch coil (1).

NOTE:
Protrusion on under side of magnet clutch coil (1) must match hole in compressor body assembly (2) .

2) Install snap ring (3) to proper direction as show using special tool.

Special Tool
(A): 09900-06107

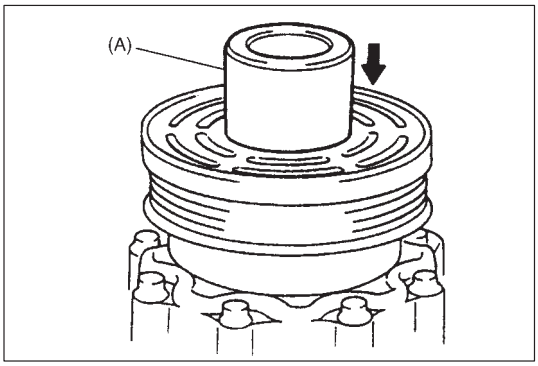

3) Install magnet clutch.
   a) Set magnet clutch squarely over clutch installation boss.
   b) Place special tool onto clutch bearing.
      Ensure that edge rests only on inner race of bearing.

Special Tool
(A): 09991-06010

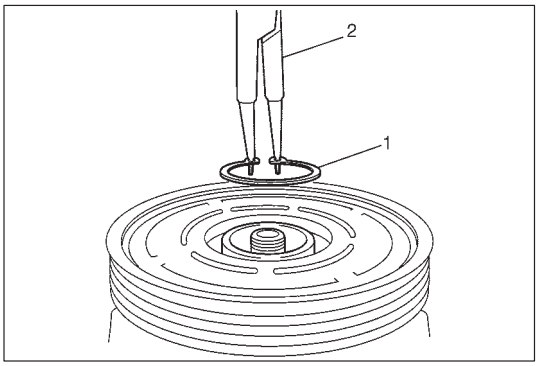

4) Install snap ring (1) using special tool.

Special Tool
(A): 09900-06107

> **CAUTION:**
> **Be careful not to scratch bearing seal.**

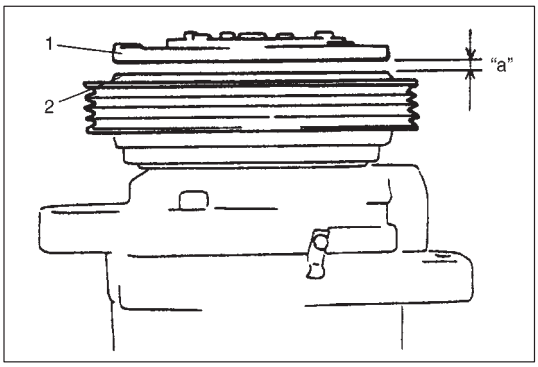

5) Adjust clearance between clutch plate (1) and magnet clutch coil (2) by putting shim on compressor shaft.

Clearance "a": 0.3 – 0.6 mm (0.012 – 0.024 in.)

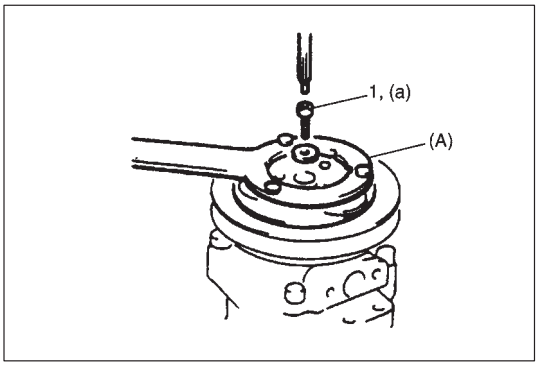

6) Tighten new clutch plate bolt (1) as specified torque.

Tightening Torque
(a): 14 N·m (1.4 kg-m, 10.5 lb-ft)

Special Tool
(A): 09991-06020

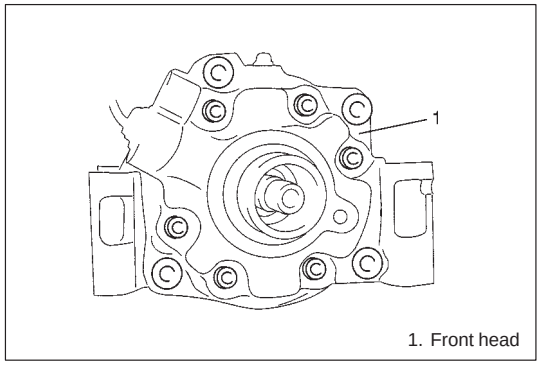

1. Front head

LIP TYPE SEAL

REMOVAL

1) Remove magnet clutch referring to “MAGNET CLUTCH” in this section.
2) Remove front head mounting bolts (10 pcs).

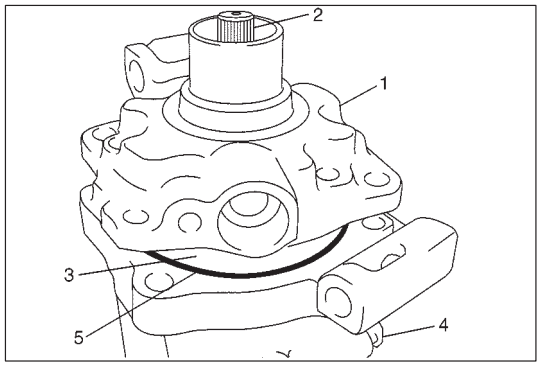

3) Remove front head (1) by pushing compressor shaft (2).

NOTE:
Be careful not to remove cylinder (3) from compressor body assembly (4).

4) Remove O-ring (5).

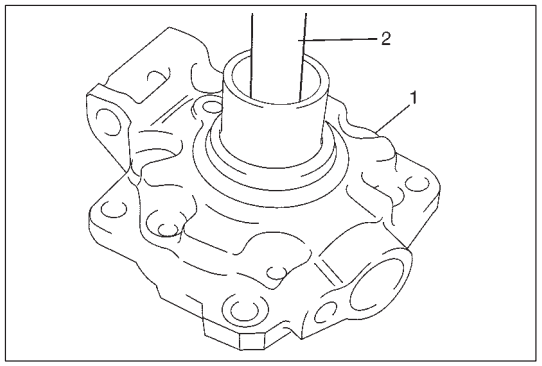

5) Remove lip type seal from front head (1) using bearing remover (2).

INSTALLATION

1) Press-fit lip type seal (1) into front head (2) using special tool.

Special Tool
(A): 09991-06050

CAUTION:
Do not reuse lip seal (1) once removed from compressor.

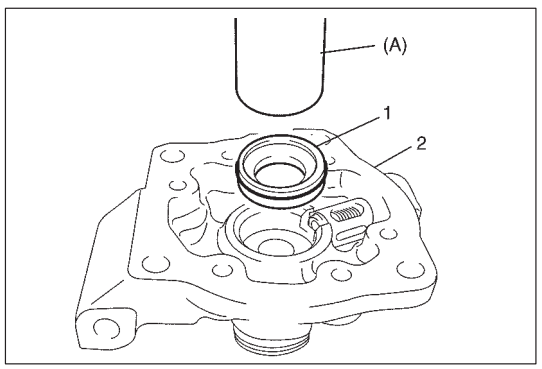

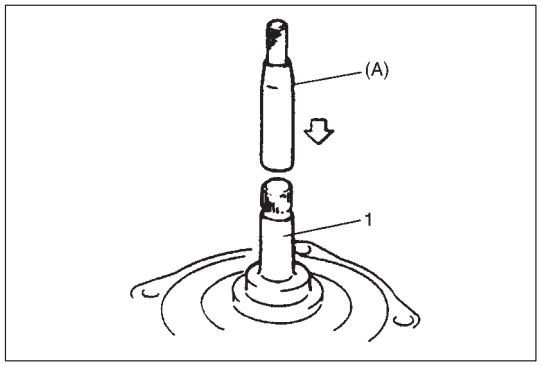

2) Coat special tool surface with compressor oil and place it on compressor shaft (1).

Special Tool
(A): 09991-06040

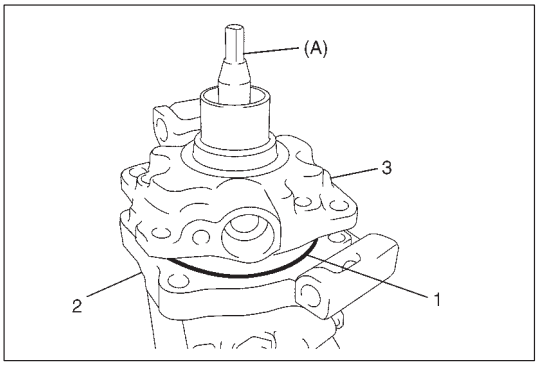

3) Install O-ring (1) to compressor body assembly (2).
4) Apply compressor oil to lip type seal and O-ring (1).
5) Install front head (3) to compressor body assembly (2).

Special Tool
(A): 09991-06040

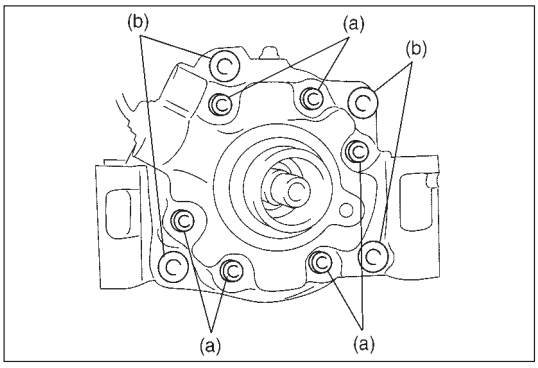

6) Tighten new front head bolts to specified toque.

Tightening Torque
(a): 14 Nm (1.4 kg-m, 10.5 lb-ft)
(b): 23 Nm (2.3 kg-m, 17.0 lb-ft)

NOTE:
Tighten bolt (a) first, and next (b).

REQUIRED SERVICE MATERIALS

MATERIALS	RECOMMENDED SUZUKI PRODUCT	USE
Compressor oil (Refrigerant oil)	COMPRESSOR OIL RS20 (150 cc) 99000-99088-00D0	● O-ring ● Each component
Refrigerant	REFRIGERANT DRUM (200g) 95794-50G00	● Refrigerant charge

SPECIAL TOOLS

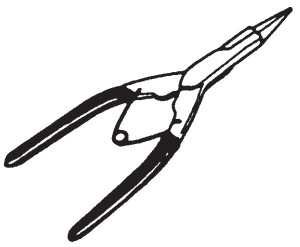

09900-06107
Snap ring pliers
(Open type)

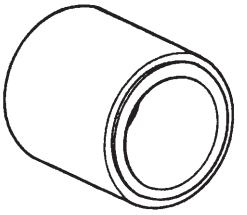

09991-06010
Magnet clutch pulley installer

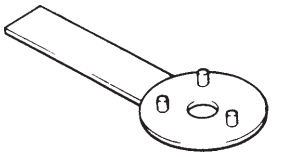

09991-06020
Armature plate spanner

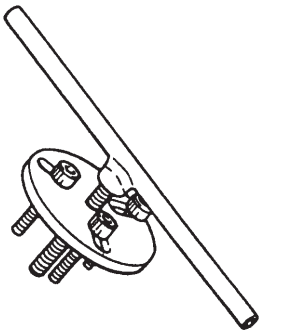

09991-06030
Armature plate remover

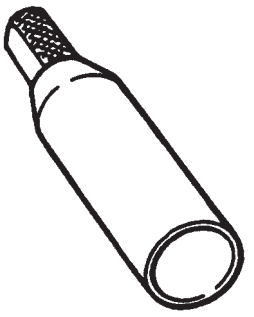

09991-06040
Lip type seal protector

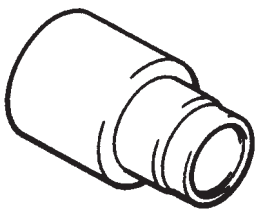

09991-06050
Lip type seal installer

SECTION 3B1

POWER STEERING (P/S) SYSTEM
(If equipped)

WARNING:
For vehicles equipped with Supplemental Restraint (Air Bag) System:

- **Service on and around the air bag system components or wiring must be performed only by an authorized SUZUKI dealer. Refer to "Air Bag System Components and Wiring Location View" under "General Description" in air bag system section in order to confirm whether you are performing service on or near the air bag system components or wiring. Please observe all WARNINGS and "Service Precautions" under "On-Vehicle Service" in air bag system section before performing service on or around the air bag system components or wiring. Failure to follow WARNINGS could result in unintentional activation of the system or could render the system inoperative. Either of these two conditions may result in severe injury.**
- **Technical service work must be started at least 90 seconds after the ignition switch is turned to the "LOCK" position and negative cable is disconnected from the battery. Otherwise, the system may be activated by reserve energy in the Sensing and Diagnostic Module (SDM).**

NOTE:

- **For the descriptions (items) not found in this section, refer to the same section of the Service Manual mentioned in the FOREWORD of this manual.**
- **All steering gear fasteners are important attaching parts in that they could affect the performance of vital parts and systems, and/or could result in major repair expense. They must be replaced with one of the same part number or with an equivalent part if replacement becomes necessary. Do not use a replacement part of lesser quality or substitute design. Torque values must be used as specified during reassembly to assure proper retention of these parts.**

CONTENTS

GENERAL DESCRIPTION 3B1-2
ON-VEHICLE SERVICE 3B1-3
Power Steering Belt 3B1-3
Hydraulic Pressure Inspection 3B1-3
Power Steering (P/S) Pump 3B1-4
TIGHTENING TORQUE SPECIFICATIONS 3B1-6
REQUIRED SERVICE MATERIAL 3B1-6
SPECIAL TOOLS 3B1-6

GENERAL DESCRIPTION

The power steering system in this vehicle reduces the driver's effort needed in turning the steering wheel by utilizing the hydraulic pressure generated by the power steering (P/S) pump which is driven by the engine. It is an integral type with the mechanical gear unit, hydraulic pressure cylinder unit and control valve unit all housed in the gear box.

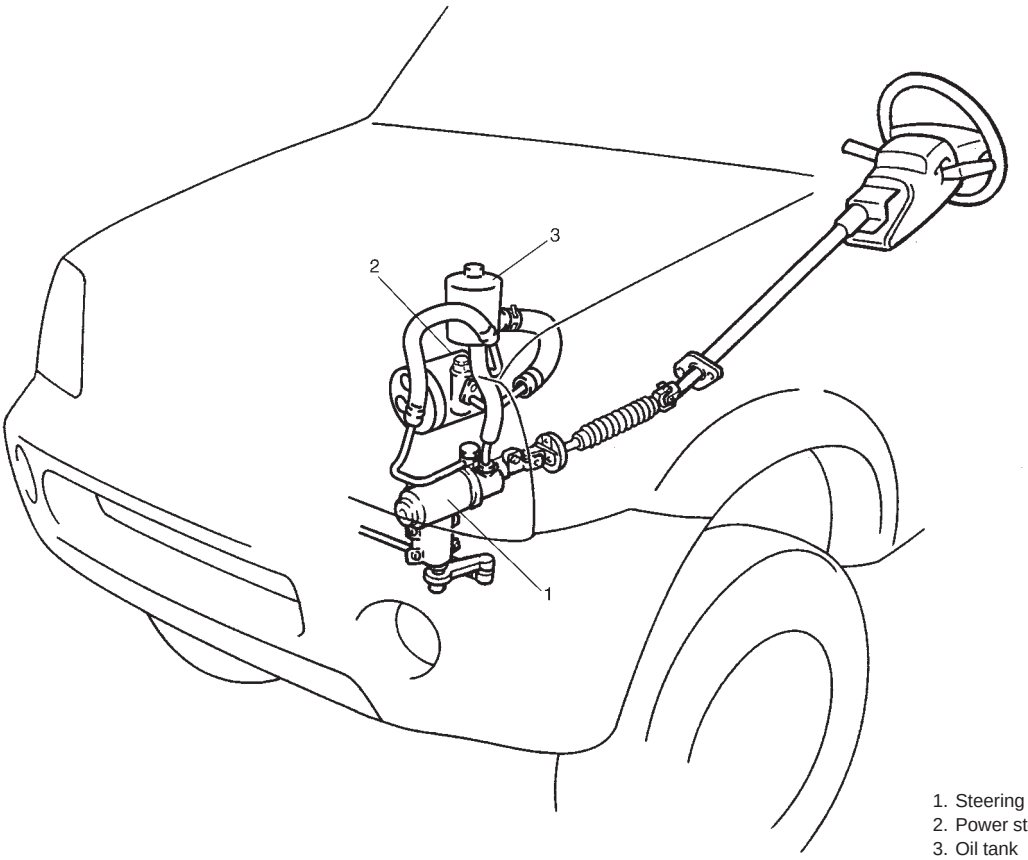

1. Steering gear box
2. Power steering (P/S) pump
3. Oil tank

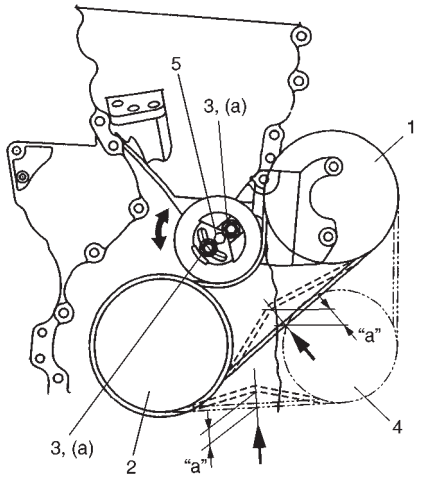

1. P/S pump pulley
2. Crank pulley
3. Tension pulley bolt
4. A/C compressor pulley (if equipped)
5. Hexagon hole

ON-VEHICLE SERVICE

POWER STEERING BELT

INSPECTION

- Check that belt is free from any damage and properly fitted in pulley groove.
- Check belt tension by measuring how much it deflects when pushed at mid-point between pulleys with about 10 kg (22 lb) force.

Deflection of oil pump belt "a": 6 – 9 mm (0.24 – 0.35 in.)

ADJUSTMENT

1) Loosen tension pulley bolts and set hexagon wrench to hexagon hole.
2) Turn tension pulley counterclockwise by hexagon wrench in order to obtain above specification.
3) Tighten tension pulley bolts to specified torque.

Tightening Torque
(a): 25 N·m (2.5 kg-m, 18.0 lb-ft)

HYDRAULIC PRESSURE INSPECTION

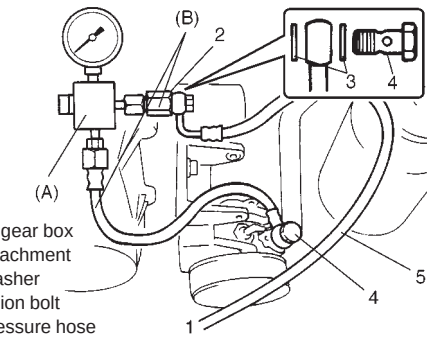

1. To gear box
2. Attachment
3. Washer
4. Union bolt
5. Pressure hose

1) Clean where pipe is connected thoroughly, then disconnect high pressure hose from high pressure pipe connector and connect oil pressure gauge (special tool) as shown.

Special Tool
(A): 09915-77410
(B): 09915-77420

2) Bleed air.

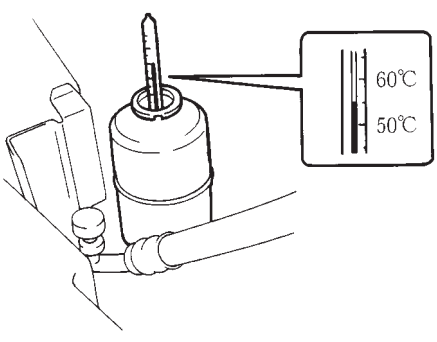

3) With engine running at idling speed, keep turning steering wheel to the right and left till fluid in oil tank is warmed to 50 to 60°C (122 – 140°F).

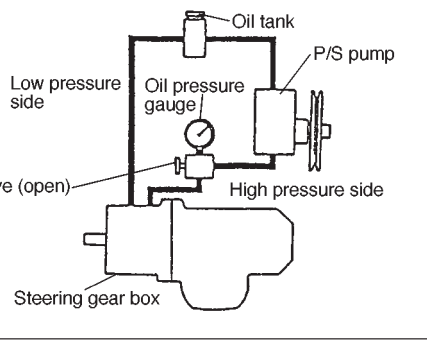

4) Back pressure check
With engine running at idling speed and hands off from steering wheel, check hydraulic pressure.

Back pressure: 980 kPa (10 kg/cm^2, 142 psi)

If back pressure exceeds 980 kPa (10 kg/cm^2, 142 psi), check control valve and pipes for obstruction.

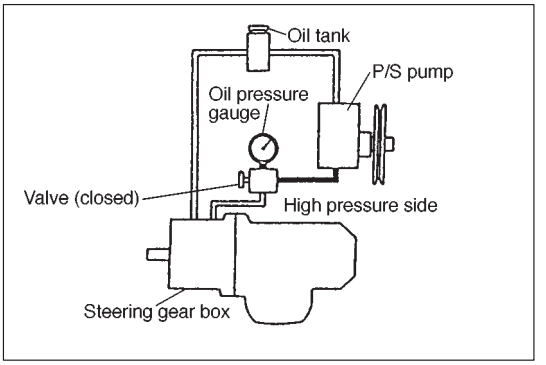

5) Relief pressure check
   - Increase engine speed to about 1,500 to 1,600 rpm.
     Close valve gradually while watching pressure increase indicated on gauge and take reading of relief pressure (maximum hydraulic pressure).

     Relief pressure: 6,400 – 8,400 kPa (65 – 85 kg/cm^2, 925 – 1208 psi)
   - If higher than 8,400 kPa (85 kg/cm^2, 1208 psi), malfunction of relief valve.
   - If lower than 6,400 kPa (65 kg/cm^2, 925 psi), failure of P/S pump or settling of relief valve spring.

CAUTION:
Be sure not to keep gauge valve closed for longer than 10 seconds.

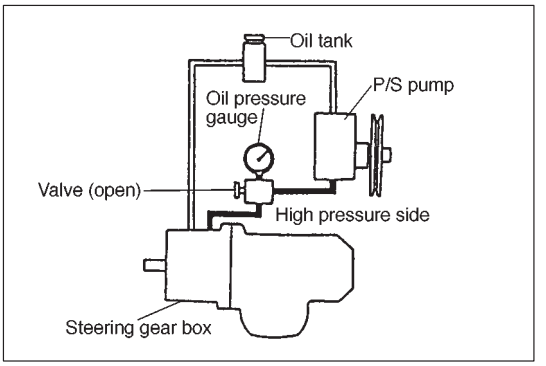

- Next, open gauge valve fully and increase engine speed to about 1,500 to 1,600 r/min. Then turn steering wheel to the left or right fully and take reading of relief pressure.
  Relief pressure: 6,400 – 8,400 kPa (65 – 85 kg/cm^2, 925 – 1208 psi)
- If lower than 6,400 kPa (65 kg/cm^2, 1208 psi), failure in steering gear.

CAUTION:
Never keep steering wheel turned fully for longer than 10 seconds.

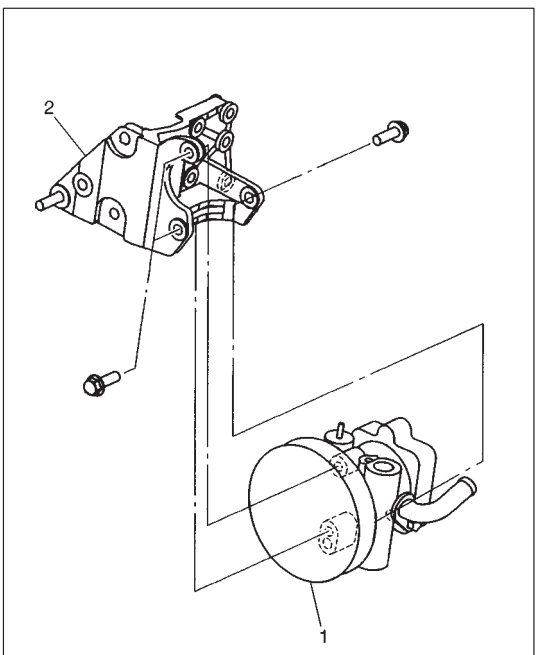

1. P/S pump
2. P/S pump bracket

POWER STEERING (P/S) PUMP

REMOVAL

1) Take out fluid in oil tank with syringe or such.
2) Remove P/S belt.
3) Disconnect high pressure hose and low pressure hose.
4) Disconnect pressure switch lead harness.
5) Remove P/S pump (by removing 3 bolts).

CAUTION:
- **Clean couplers at intake and discharge ports completely before disconnection.**
- **Plug ports of removed pump to prevent dust and any foreign object from entering.**

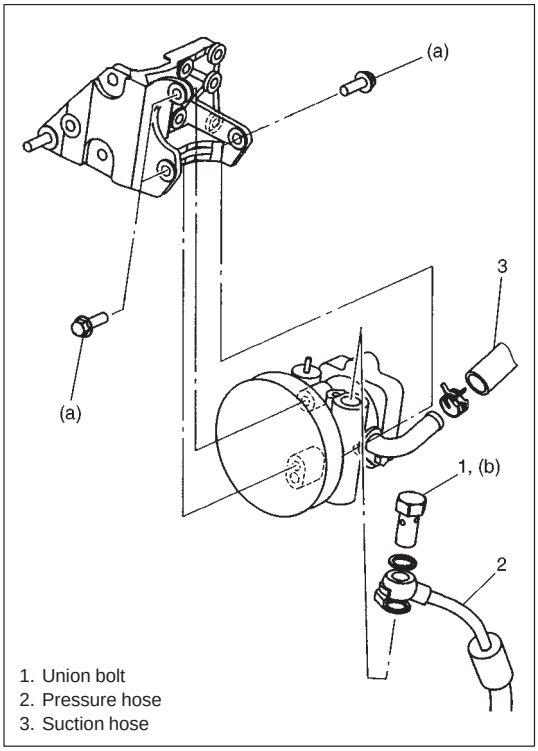

1. Union bolt
2. Pressure hose
3. Suction hose

INSTALLATION

- Install components in reverse order of removal procedure.

CAUTION:
After installation, fill A/T fluid (an equivalent to DEXRON®-II, DEXRON®-IIE or DEXRON®-III) and be sure to bleed air. (Refer to item AIR BLEEDING.)

- Tighten each bolt as specified below.

  Tightening Torque
  (a): 25 N·m (2.5 kg-m, 18.5 lb-ft)
  (b): 60 N·m (6.0 kg-m, 43.5 lb-ft)

- Adjust P/S belt, refer to POWER STEERING BELT INSPECTION in this section.
- Connect pressure switch terminal.

TIGHTENING TORQUE SPECIFICATIONS

Fastening Parts	Tightening Torque		
	N·m	kg-m	lb-ft
Tension pulley bolt	25	2.5	18.0
Oil pump mount bolt	25	2.5	18.5
Oil pump high pressure union bolt	60	6.0	43.5
Oil pump cover bolts	28	2.8	20.0
Pressure switch	28	2.8	20.0
Suction connector bolt	12	1.2	8.5
Gear box mounting nuts and bolt	80	8.0	58.0
Gear box high pressure union bolt	35	3.5	25.5
Pitman arm nut	135	13.5	98.0
Steering shaft joint bolt	25	2.5	18.5

REQUIRED SERVICE MATERIAL

MATERIAL	RECOMMENDED SUZUKI PRODUCT	USE
Power steering fluid	An equivalent of DEXRON®-II, DEXRON®-IIE or DEXRON®-III.	● To fill oil tank ● Parts lubrication when installing
Lithium grease	SUPER GREASE (A) (99000-25010)	● Oil seal lip of P/S pump pulley shaft

SPECIAL TOOLS

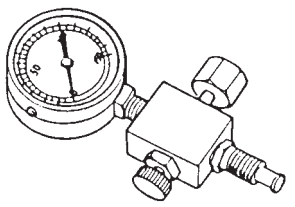	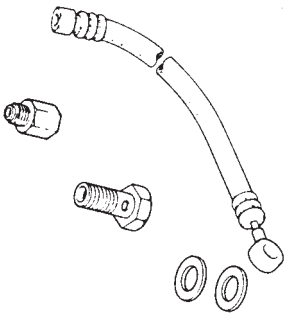	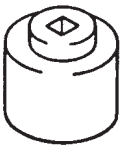	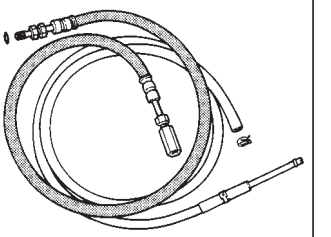
09915-77410 Oil pressure gauge	09915-77420 Oil pressure gauge attachment & hose set	09944-18211 Torque check socket	09945-35010 Air bleeding hose set

SECTION 3D

FRONT SUSPENSION

WARNING:
When hoisting vehicle, be sure to select the lifting point suitable for the service work referring to SECTION 0A.

NOTE:

- **For the descriptions (items) not found in this section, refer to the same section of the Service Manual mentioned in the FOREWORD of this manual.**
- **All front suspension fasteners are an important attaching part in that it could affect the performance of vital parts and systems, and/or could result in major repair expense. They must be replaced with one of the same part number or with an equivalent part if replacement becomes necessary. Do not use a replacement part of lesser quality or substitute design. Torque values must be used as specified during reassembly to assure proper retention of this part.**
- **Never attempt to heat, quench or straighten any front suspension part. Replace it with a new part or damage to the part may result.**

CONTENTS

GENERAL DESCRIPTION 3D- 2
4WD Controll System 3D- 2
DIAGNOSIS 3D- 3
4WD Controller And Its Circuit Check 3D- 3
ON VEHICLE SERVICE 3D- 4
Wheel Hub/Bearing/Oil Seal 3D- 4
Leading Arm/Bushing 3D- 9
TIGHTENING TORQUE SPECIFICATIONS . . 3D-11
REQUIRED SERVICE MATERIALS 3D-12
SPECIAL TOOLS 3D-13

GENERAL DESCRIPTION

4WD CONTROL SYSTEM

SYSTEM CIRCUIT

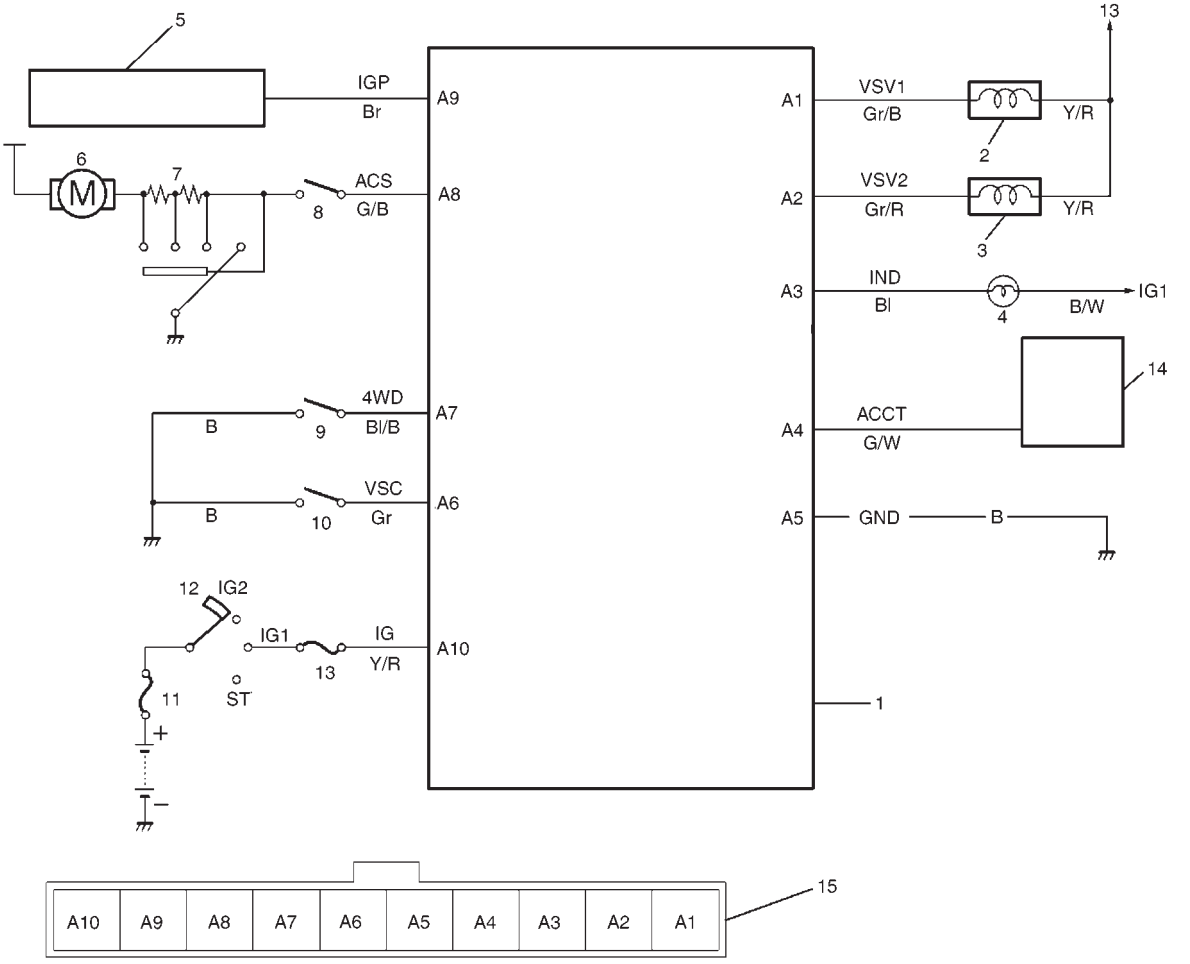

1. 4WD controller
2. VSV1
3. VSV2
4. 4WD indicator lamp
5. ECM
6. Blower fan motor
7. Blower fan switch
8. A/C switch (if equipped)
9. 4WD switch
10. Vacuum switch
11. Main fuse
12. IG switch
13. IG fuse
14. A/C controller (if equipped)
15. Coupler of 4WD controller

Operation

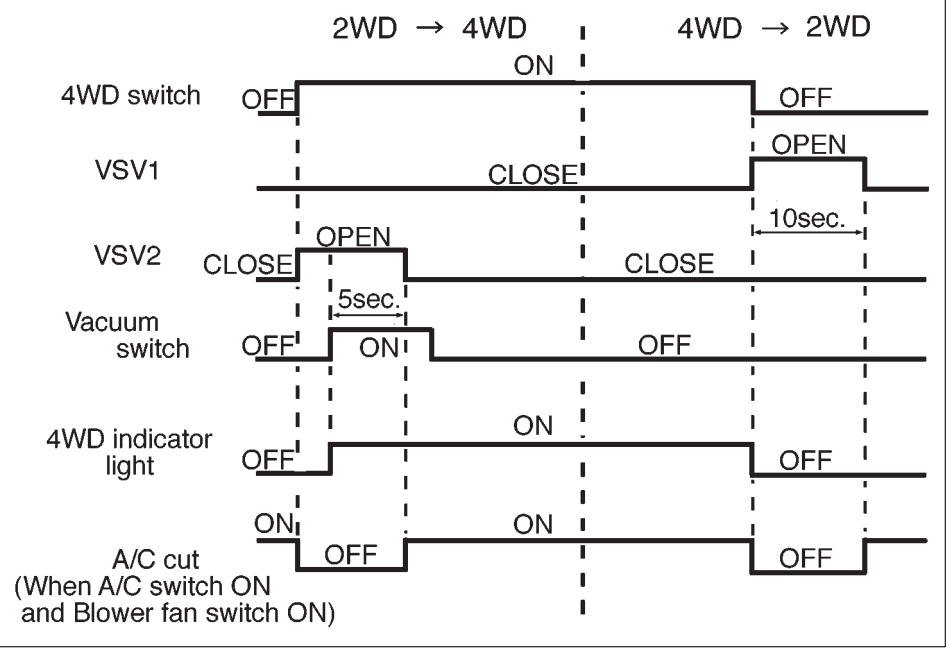

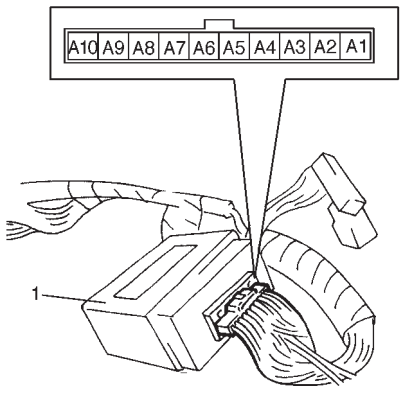

1. 4WD controller

DIAGNOSIS

4WD CONTROLLER AND ITS CIRCUIT CHECK

VOLTAGE CHECK

Check for input or output voltage of 4WD controller (voltage between each circuit and body ground) with 4WD controller connector connected and ignition switch turned START (engine run).

CAUTION:
- **Disable air bag system (if equipped with Air Bag), refer to Section 10B.**
- **This check must be carried out in a well-ventilated place.**

TERMINAL	CIRCUIT	WIRE COLOR	NORMAL VOLTAGE	CONDITION
A1	VSV1	Gr/B	about 0 V	10 seconds after transfer shift control lever : 4WD → 2WD
			10 – 14 V	Transfer shift control lever: 4WD
A2	VSV2	Gr/R	*about 0 V	5 seconds after transfer shift control lever : 2WD → 4WD
			10 – 14 V	Transfer shift control lever: 2WD
A3	4WD indicator lamp	Bl	*about 0 V	Transfer shift control lever: 4WD
			10 – 14 V	Transfer shift control lever: 2WD
A4	A/C controller	G/W	*10 – 12 V	5 – 10 seconds after engine starts or transfer shift control lever switches.
			about 0 V	A/C switch and blower fan switch ON.
A5	Ground	B	about 0 V	any time
A6	Vacuum switch	Gr	*about 0 V	5 seconds after transfer shift control lever : 2WD → 4WD
			10 – 14 V	Other than above
A7	4WD switch	Bl/B	about 0 V	Transfer shift control lever: 4WD
			10 – 14 V	Transfer shift control lever: 2WD
A8	A/C switch	G/B	about 0 V	A/C switch ON and blower fan switch ON
			10 – 14 V	Other than above
A9	Ignition coil	Br	0 – 1 V	IG: ON
			Voltage varies according to engine speed.	
A10	Ignition switch	Y/R	10 – 14 V	IG: ON

* : With engine running

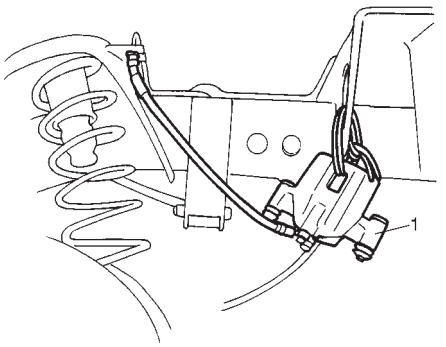

1. Brake caliper

ON-VEHICLE SERVICE

WHEEL HUB/BEARING/OIL SEAL

REMOVAL

1) Hoist vehicle and remove wheel.
2) Remove brake caliper carrier bolts and suspend caliper.

CAUTION:
During removal, be careful not to damage brake flexible hose and not to depress brake pedal.

3) Remove ABS wheel sensor (if equipped with ABS).

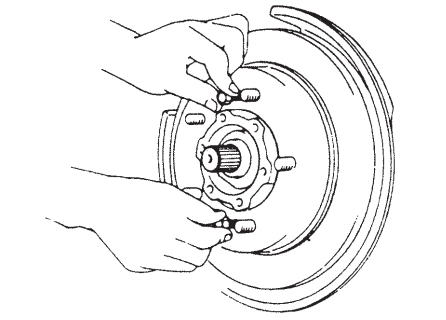

4) Remove brake disc.

NOTE:
If brake disc can not be removed by hand, using 8 mm bolts.

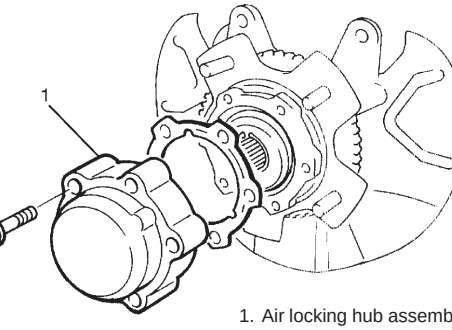

1. Air locking hub assembly

5) Remove air locking hub assembly (for 4WD).

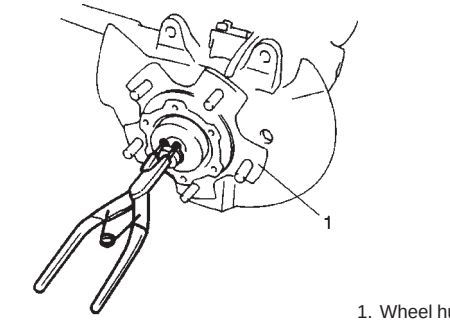

1. Wheel hub

5') Remove hub cap (for 2WD).
6) Remove front axle shaft circlip and wheel spindle thrust washer (for 4WD).

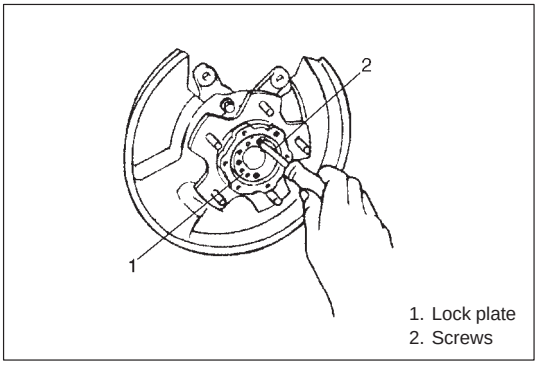

1. Lock plate
2. Screws

6') Remove front wheel bearing lock plate by loosening 4 screws (for 2WD).

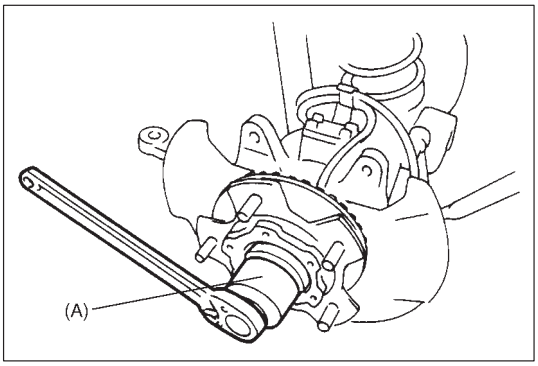

7) Uncaulk front wheel bearing lock nut (for 4WD).
Remove front wheel bearing lock nut by using special tool.

Special Tool
(A): 09944-77020 (For 4WD)
09951-16050 (For 2WD)

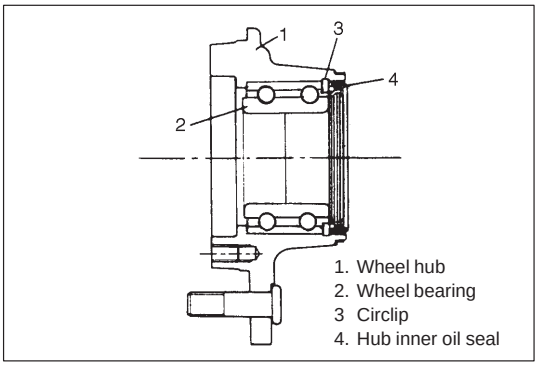

1. Wheel hub
2. Wheel bearing
3 Circlip
4. Hub inner oil seal

8) Remove front wheel bearing washer.
9) Remove wheel hub complete with bearings and oil seal.

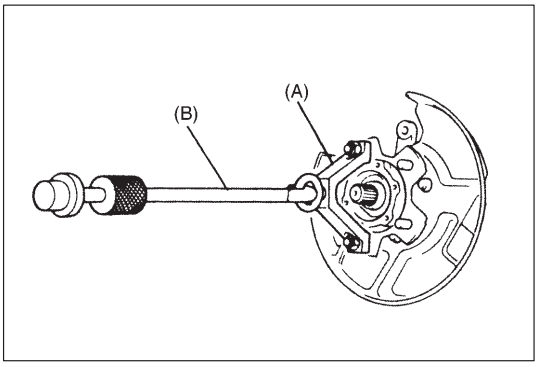

NOTE:
If wheel hub can not be removed by hand, use special tools as shown.

Special Tool
(A): 09943-35511 or 09943-35512
(B): 09942-15510

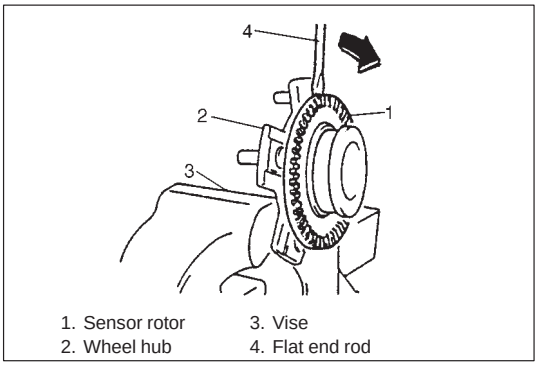

1. Sensor rotor
2. Wheel hub
3. Vise
4. Flat end rod

10) Remove sensor rotor from wheel hub as shown (if equipped with ABS).

CAUTION:
Pull out sensor rotor from wheel hub gradually and evenly.
Attempt to pull it out partially may cause it to be deformed.

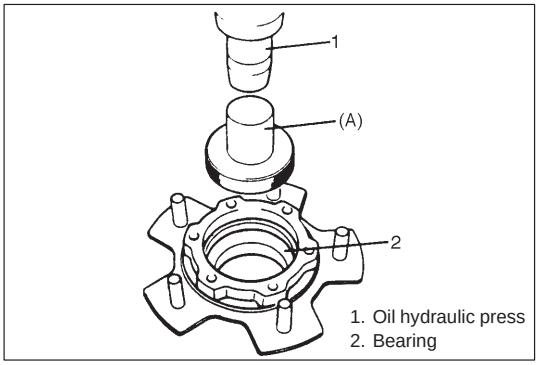

1. Oil hydraulic press
2. Bearing

11) Remove wheel bearing oil seal and circlip.
12) Using hydraulic press and special tool remove wheel bearing.

Special Tool
(A): 09913-75520

13) Remove hub bolts from hub.

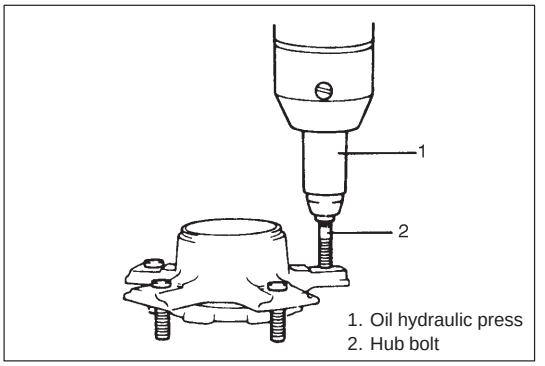

1. Oil hydraulic press
2. Hub bolt

INSTALLATION

1) Insert new stud in hub hole. Rotate stud slowly to assure serrations are aligned with those made by original bolt.

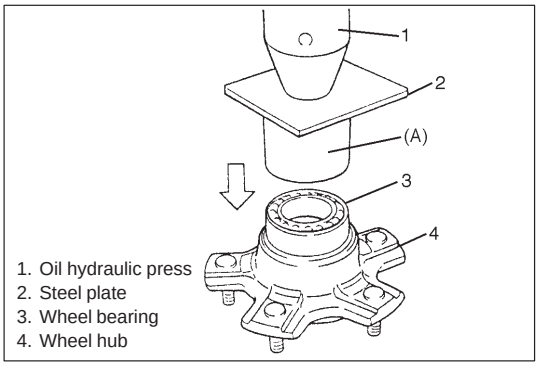

1. Oil hydraulic press
2. Steel plate
3. Wheel bearing
4. Wheel hub

CAUTION:
Press-fit wheel housing vertically to hub.

2) Using special tool, press-fit wheel bearing until its end contacts stepped surface of wheel hub.

Special Tool
(A): 09944-78210

3) Install bearing circlip.

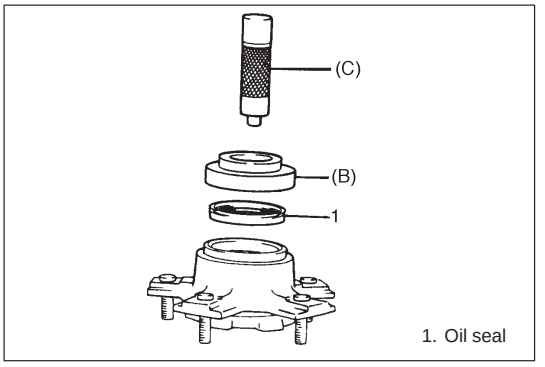

1. Oil seal

4) Drive in wheel bearing oil seal by using special tools.

Special Tool
(B): 09944-66010
(C): 09924-74510

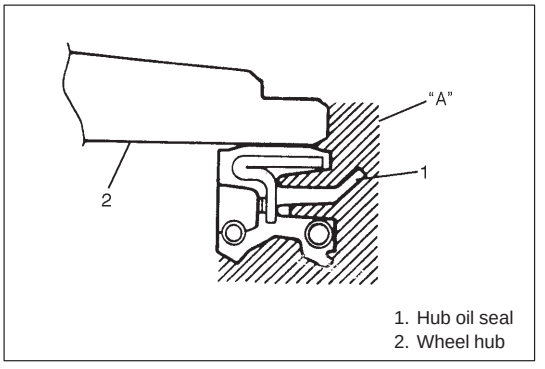

1. Hub oil seal
2. Wheel hub

5) Apply lithium grease to lip portion and hollow of oil seal.

NOTE:
Amount of grease applied to hollow in oil seal should be more than 60% of its vacant space.

"A" : Grease 99000-25010

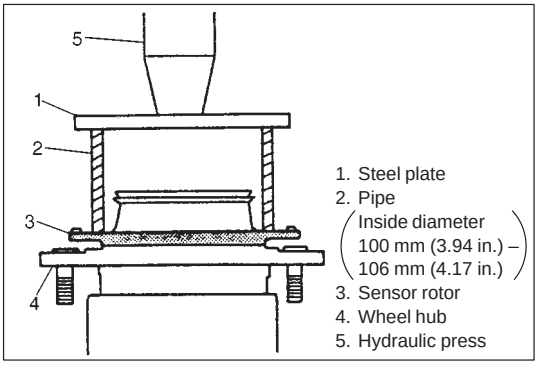

6) Install sensor rotor as shown (if equipped with ABS).

NOTE:

- **Pipe used here should have inner diameter of 100 mm (3.94 in.) – 106 mm (4.17 in.) and its outside should not contact teeth of sensor rotor.**
- **Use care not to insert wheel hub diagonally.**

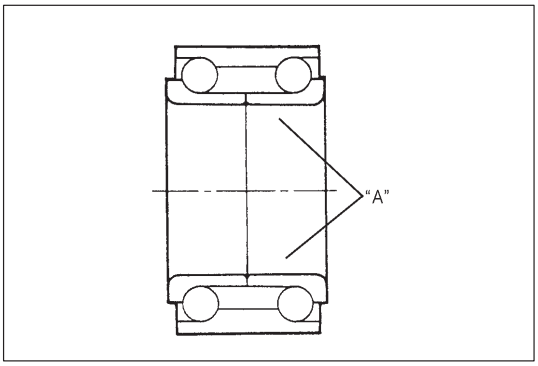

7) Apply lithium grease inside wheel bearing thin.

"A": Grease 99000-25010

8) Install wheel hub complete with bearings and oil seal onto front wheel spindle.
9) Install bearing washer.

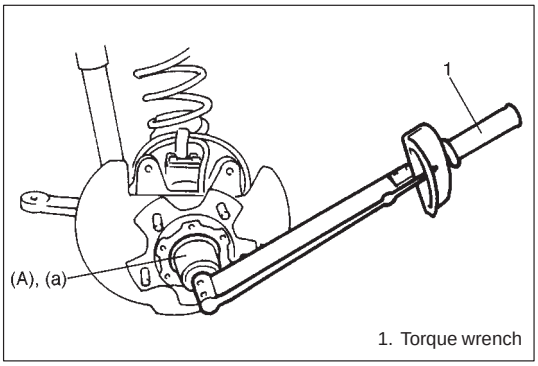

10) Tighten wheel bearing lock nut to specified torque while turning wheel hub by hand.

Special Tool
(A): 09944-77020 (For 4WD)
09951-16050 (For 2WD)

Tightening Torque
(a): 220 N·m (22.0 kg-m, 160 lb-ft)

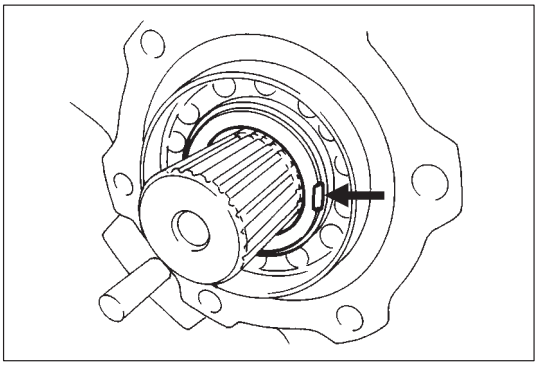

11) Caulk front wheel bearing lock nut at groove of spindle (for 4WD).

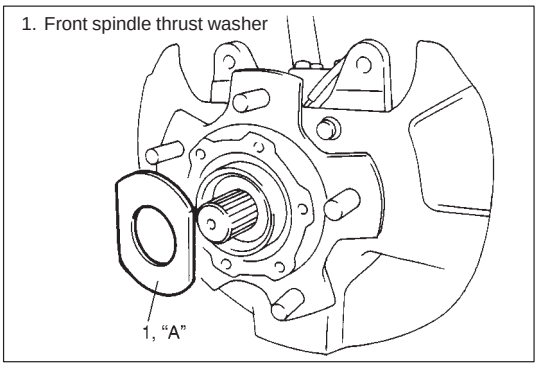

12) Apply lithium grease thinly to both surface, all around of front spindle thrust washer (for 4WD).

"A": Grease 99000-25010

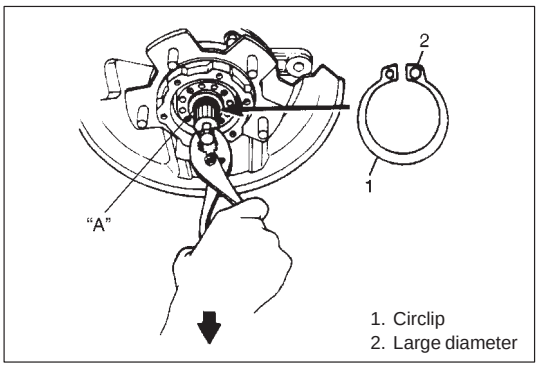

1. Circlip
2. Large diameter

13) Install front axle shaft circlip and apply thin coat of grease to spline part of axle shaft (for 4WD).

NOTE:
When installing circlip to front axle shaft, utilize screw hole in axle shaft to pull it out and bring large diameter of circlip at right as shown.

"A": Grease 99000-25010

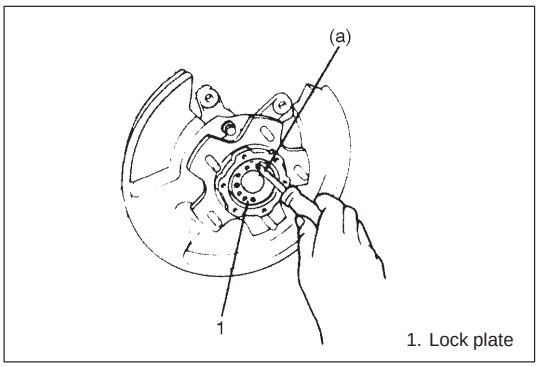

1. Lock plate

14) Using lock plate, lock bearing lock nut. If lock screw hole is not aligned with screw hole in lock nut, turn lock nut in tightening direction till they align (For 2WD).

Tightening Torque
(a): 1.5 N·m (0.15 kg-m, 1.0 lb-ft)

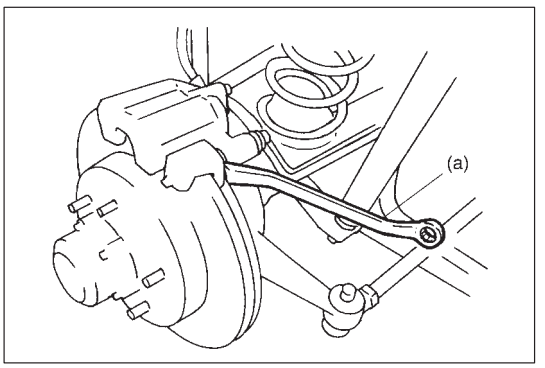

15) Install ABS wheel sensor (if equipped with ABS).
16) Install brake disc and caliper assembly.
Tighten carrier bolts to specified torque.

Tightening Torque
(a): 85 N·m (8.5 kg-m, 61.5 lb-ft)

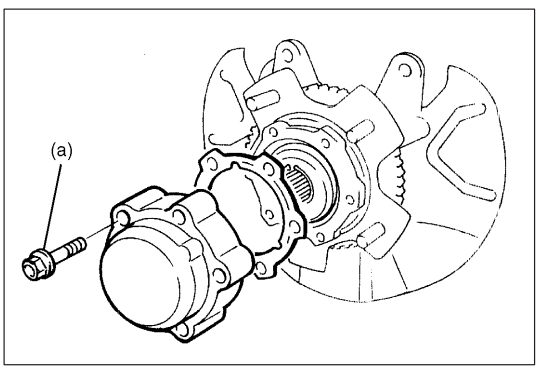

17) For 4WD vehicle
Clean mating surface of air locking hub and wheel hub.
Install air locking hub assembly to wheel hub and tighten bolts to specified torque.

Tightening Torque
(a): 48 N·m (4.8 kg-m, 35.0 lb-ft)

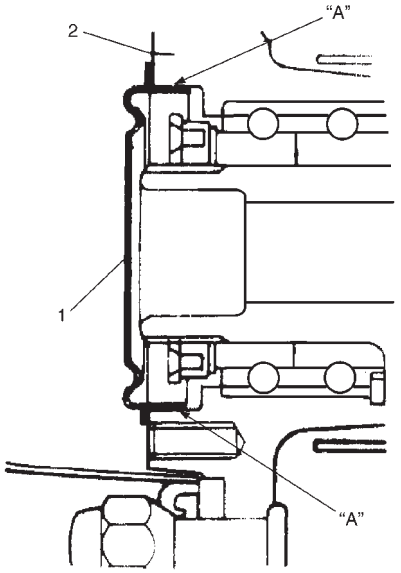

1. Hub cap
2. Wheel hub

18) For 2WD vehicle
Remove grease, old sealant and dusts from mating surfaces of hub cap and wheel hub to clean, apply water tight sealant to hub cap mating surface evenly, and install hub cap to wheel hub.

NOTE:
- **When installing hub cap, hammer lightly several locations on the collar of cap until collar comes closely into contact with wheel hub.**
- **If fitting part of cap is deformed or damaged or if it is fitted loosely, replace with new one.**

"A": Sealant 99000-31090

19) Install wheel and tighten wheel nuts to specified torque, refer to TIGHTENING TORQUE SPECIFICATIONS in this section.
20) Lower hoist.
21) Check air locking hub for air leakage, refer to 4WD SYSTEM CHECK (4WD Vehicle).

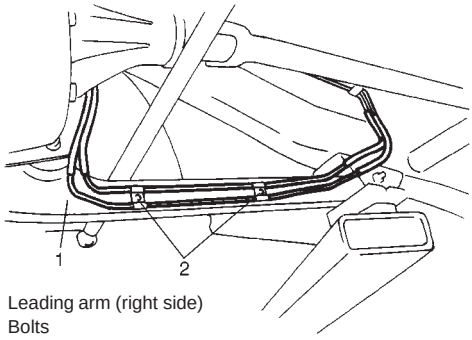

1. Leading arm (right side)
2. Bolts

LEADING ARM/BUSHING

REMOVAL

1) Hoist vehicle.
2) Remove air locking hub vacuum pipe clamp bolts (for 4WD).

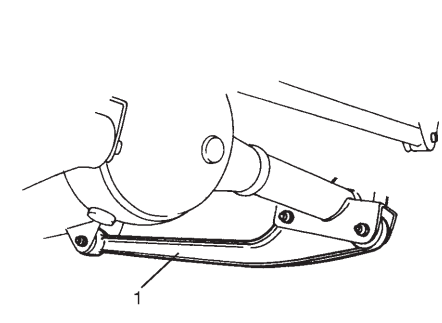

1. Leading arm

3) Support front axle housing by using floor jack.
4) Remove shock absorber lower mounting bolt, refer to FRONT SHOCK ABSORBER REMOVAL in this section.
5) Remove mounting bolts and leading arm.

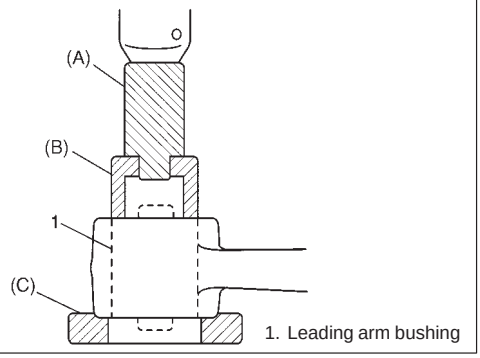

1. Leading arm bushing

6) Remove bushings by using hydraulic press and special tools.

Special Tool
(A): 09924-74510
(B): 09951-16030
(C): 09951-26010

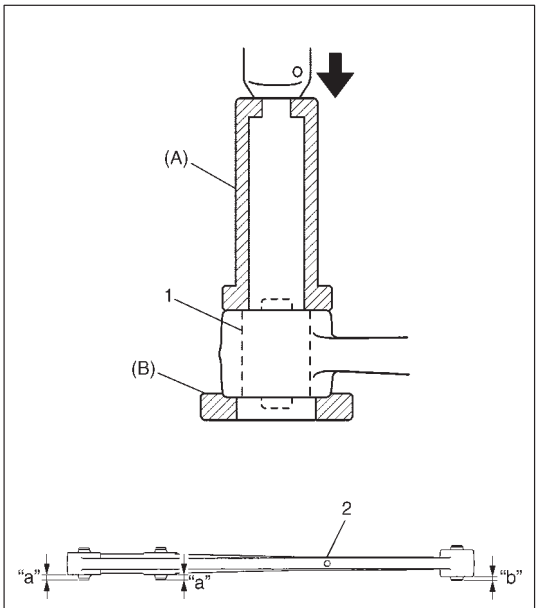

1. Leading arm bushing
2. Leading arm

INSTALLATION

1) Install bushings by using hydraulic press and special tools, noting the following point.
   - Install bushings so that either face of bushing are aligned with housing edge of leading arm, also the length between the aligned side end of bushing and leading arm are within specification below.

Special Tool
(A): 09913-85210
(B): 09951-26010

"a": 8.5 – 10.5 mm (0.33 – 0.41 in.)
"b": 6.0 – 9.0 mm (0.24 – 0.35 in.)

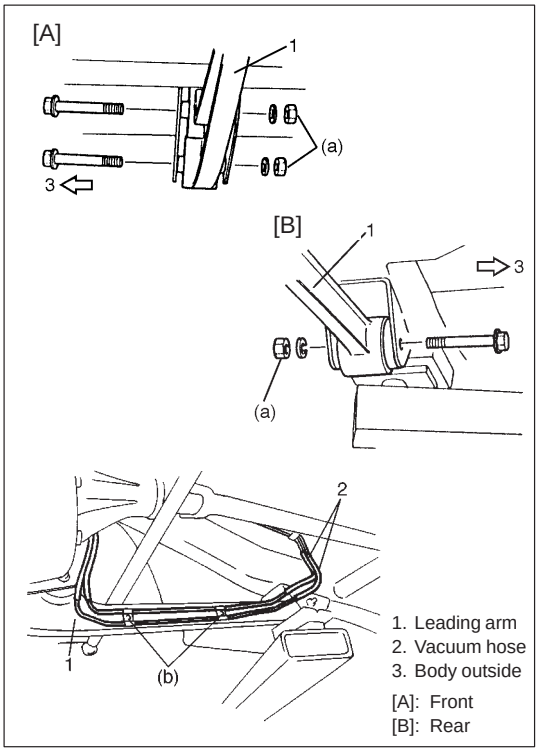

1. Leading arm
2. Vacuum hose
3. Body outside

[A]: Front
[B]: Rear

2) Install leading arm to vehicle body and axle housing, referring to figure for proper installing direction of bolts.
   Nuts should not be tightened.
3) Install shock absorber lower mounting bolt, refer to FRONT SHOCK ABSORBER INSTALLATION in this section.
4) Install air locking hub vacuum pipe clamp bolts and tighten them to specified torque (for 4WD).

Tightening Torque
(b): 5.5 N·m (0.55 kg-m, 4.0 lb-ft)

5) Lower hoist and with vehicle in non-loaded condition, tighten nuts of leading arm to specified torque.

Tightening Torque
(a): 90 N·m (9.0 kg-m, 65.0 lb-ft)

TIGHTENING TORQUE SPECIFICATIONS

Fastening Parts	Tightening Torque		
	N·m	kg-m	lb-ft
Stabilizer mount bracket bolt	20	2.0	14.5
Stabilizer ball joint nut	50	5.0	36.5
Shock absorber lock nut	29	2.9	21.0
Shock absorber lower nut	90	9.0	65.0
Brake caliper carrier bolt	85	8.5	61.5
Wheel bearing lock nut	220	22.0	160.0
Wheel bearing lock washer screw	1.5	0.15	1.0
Air locking hub bolt	48	4.8	35.0
Wheel spindle bolt	50	5.0	36.5
Kingpin bolt	25	2.5	18.0
Knuckle seal cover bolt	10	1.0	7.5
Tie-rod end nut	43	4.3	31.5
Drag-rod end nut			
Lateral rod bolt and nut	90	9.0	65.0
Leading arm nut			
Front differential carrier bolt	23	2.3	17.0
Front propeller shaft flange bolt	50	5.0	36.5
Wheel nut	95	9.5	69.0
Vacuum pipe clamp bolt	5.5	0.55	4.0

REQUIRED SERVICE MATERIALS

MATERIALS	RECOMMENDED SUZUKI PRODUCT	USE
Lithium grease	SUZUKI SUPER GREASE (A) (99000-25010)	Knuckle seal/axle shaft oil seal Recess of wheel spindles Wheel hub oil seal Wheel bearing Spindle thrust washer Spindle bush (inside and flange part) Spindle oil seal Kingpin bearing Axle shaft bearing
Sealant	SUZUKI BOND NO. 1215 (99000-31110)	Mating surfaces of wheel spindle and knuckle Mating surface of differential carrier and axle housing
Sealing compound	SUZUKI SEALING COMPOUND 366E (99000-31090)	Mating surface of wheel spindle and knuckle Kingpin Mating surfaces of hub cap and wheel hub

SPECIAL TOOLS

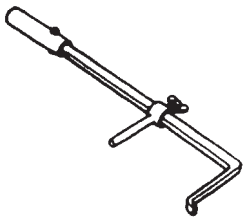 09913-50121 Oil seal remover	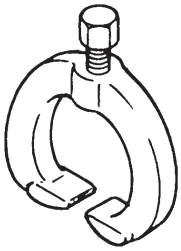 09913-65210 Tie rod end remover	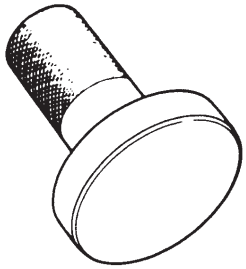 09913-75520 Bearing installer	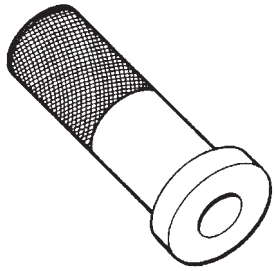 09913-85210 Oil seal installer
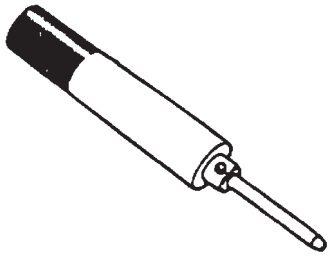 09916-58210 Valve guide installer handle	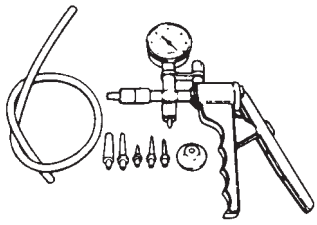 09917-47910 Vacuum pump gauge	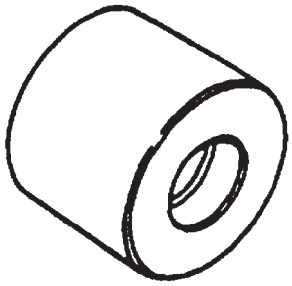 09917-88210 Valve guide installer attachment	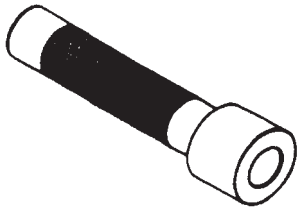 09922-55131 Bearing installer
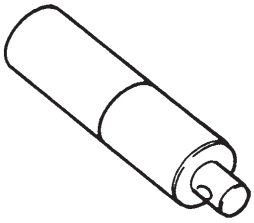 09924-74510 Bearing installer handle	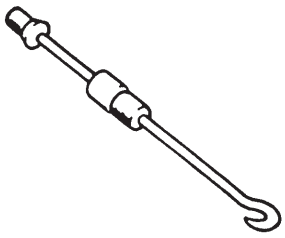 09942-15510 Sliding hammer	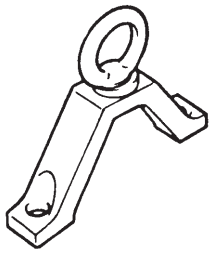 09943-35511 or 09943-35512 Brake drum remover	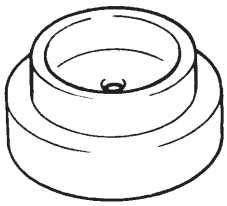 09944-66010 Wheel hub/knuckle oil seal installer
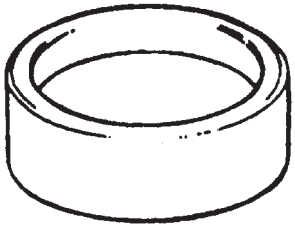 09944-66020 Bearing installer	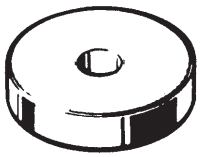 09944-68510 Bearing installer attachment	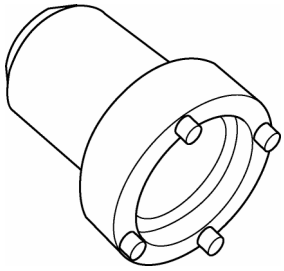 09944-77020 Ring nut wrench	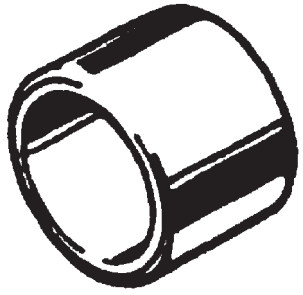 09944-78210 Bearing installer support

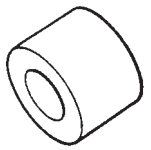	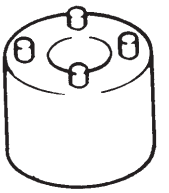	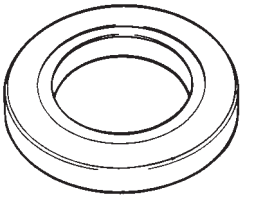	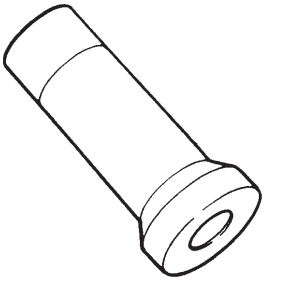
09951-16030 Bush remover	09951-16050 Wheel bearing tightening tool	09951-26010 Bush remover plate	09951-76010 Bearing installer

SECTION 3E

REAR SUSPENSION

WARNING:
When hoisting vehicle, be sure to select the lifting point suitable for the service work referring to SECTION 0A.

NOTE:
- **For the descriptions (items) not found in this section, refer to the same section of the Service Manual mentioned in the FOREWORD of this manual.**
- **All suspension fasteners are an important attaching part in that it could affect the performance of vital parts and systems, and/or could result in major repair expense. They must be replaced with one of the same part number or with an equivalent part if replacement becomes necessary. Do not use a replacement part of lesser quality or substitute design. Torque values must be used as specified during reassembly to assure proper retention of this part.**
- **Never attempt to heat, quench or straighten any suspension part. Replace it with a new part, or damage to the part may result.**

CONTENTS

ON-VEHICLE SERVICE 3E- 2
Trailing Arm/Bushing 3E- 2
TIGHTENING TORQUE SPECIFICATIONS 3E- 4
REQUIRED SERVICE MATERIALS 3E- 4
SPECIAL TOOLS 3E- 5

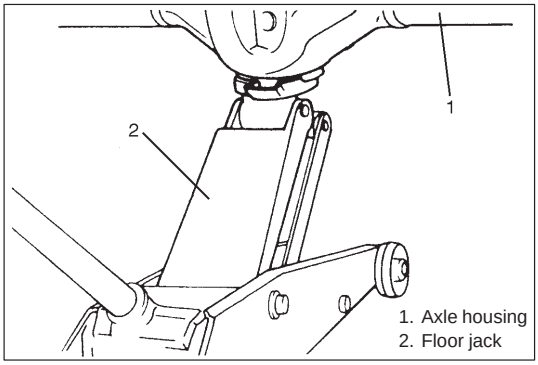

1. Axle housing
2. Floor jack

ON-VEHICLE SERVICE

TRAILING ARM/BUSHING

REMOVAL

1) Hoist vehicle.
2) Support rear axle housing by using floor jack.

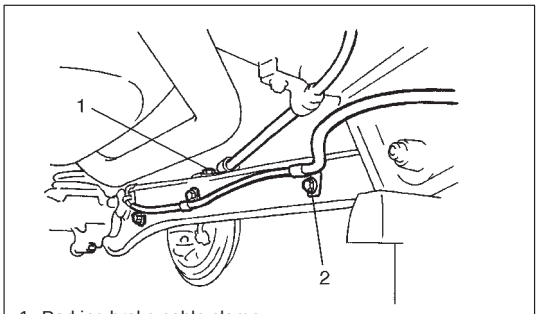

1. Parking brake cable clamp
2. Wheel speed sensor harness clamp

3) Disconnect parking brake cable clamp from trailing arm.
4) Disconnect wheel speed sensor harness clamps from trailing arm (if equipped with ABS).

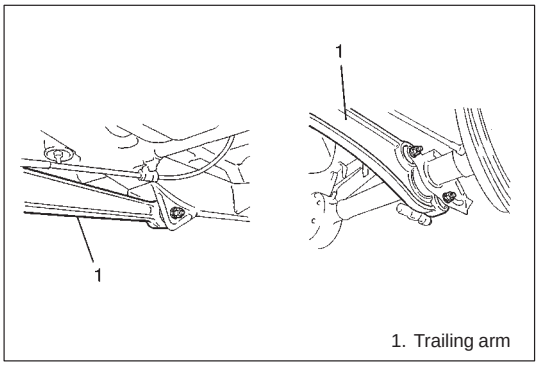

1. Trailing arm

5) Remove trailing arm mounting bolts.
6) Remove trailing arm.

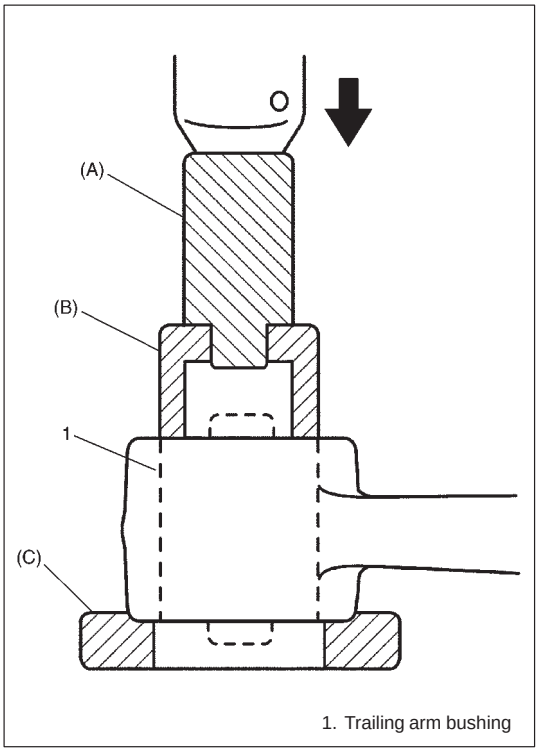

1. Trailing arm bushing

7) Remove bushings by using hydraulic press and special tools.

Special Tool
(A): 09924-74510
(B): 09951-16030
(C): 09951-26010

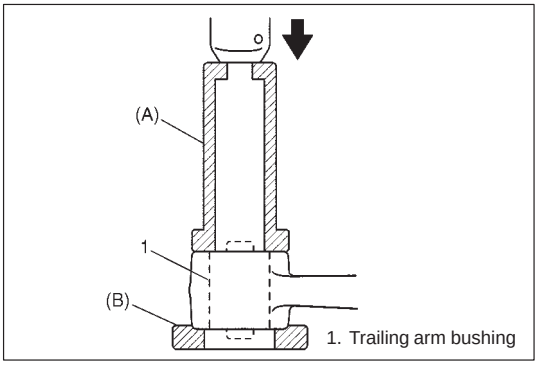

1. Trailing arm bushing

INSTALLATION

1) Install bushings by using hydraulic press and special tools, noting the following points.

Special Tool
(A): 09913-85210
(B): 09951-26010

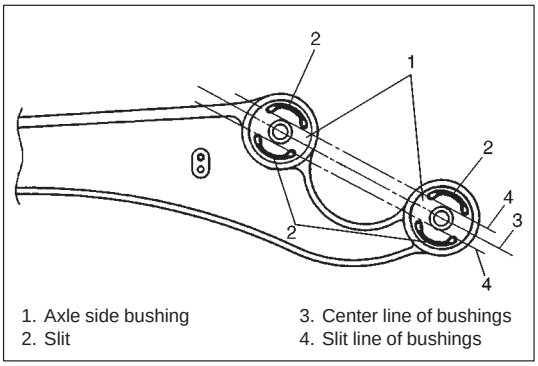

1. Axle side bushing
2. Slit
3. Center line of bushings
4. Slit line of bushings

- For axle side bushings, install them so that center line and slit lines of them are parallel as shown figure.

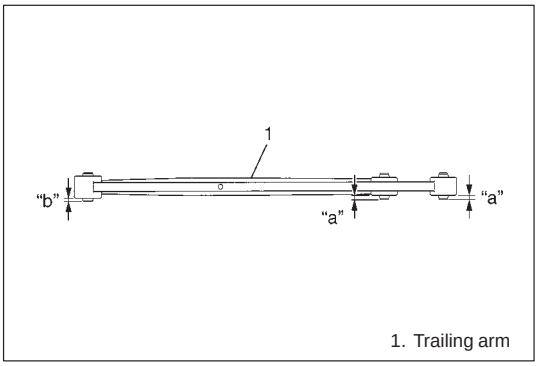

1. Trailing arm

- Install bushings so that either face of bushing are aligned with housing edge of leading arm, also the length between the aligned side end of bushing and trailing arm are within specification below.

"a": 8.5 – 10.5 mm (0.33 – 0.41 in.)
"b": 6.0 – 9.0 mm (0.24 – 0.35 in.)

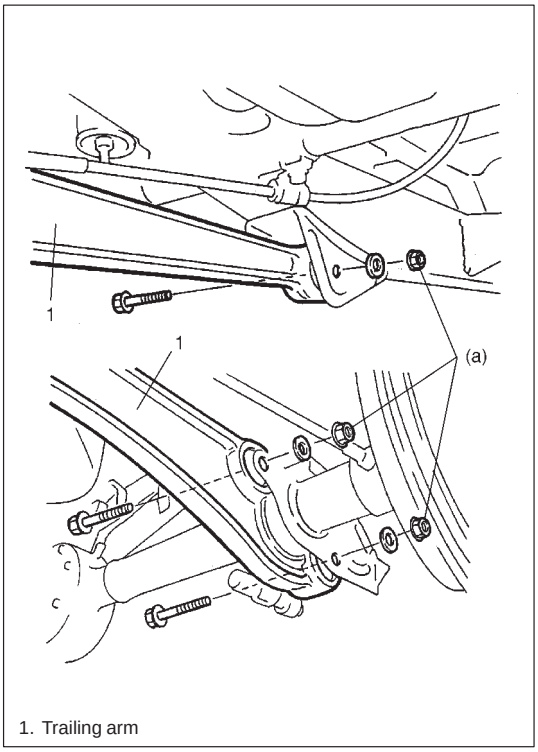

1. Trailing arm

2) Install trailing arm to vehicle body and rear axle housing, referring to figure for proper installing direction of bolts.
   Nuts should not be tightened.
3) Remove floor jack.
4) Connect wheel speed sensor harness clamps to trailing arm (if equipped with ABS).
5) Connect parking brake cable clamp to trailing arm.
6) Lower hoist and with vehicle in non-loaded condition, tighten trailing arm nuts to specified torque.

Tightening Torque
(a): 90 N·m (9.0 kg-m, 65.0 lb-ft)

TIGHTENING TORQUE SPECIFICATIONS

Fastening Parts	Tightening Torque		
	N·m	kg-m	lb-ft
Shock absorber upper and lower bolt	85	8.5	61.5
Bump stopper	50	5.0	36.5
Lateral rod	90	9.0	65.0
Trailing arm nut (Front and Rear)			
Brake back plate nut	23	2.3	17.0
Brake pipe flare nut	16	1.6	11.5
Rear differential carrier bolt	23	2.3	17.0
Rear propeller shaft bolt	50	5.0	36.5
Wheel nut	95	9.5	69.0
Wheel speed sensor harness bolt	10	1.0	7.5

REQUIRED SERVICE MATERIALS

MATERIALS	RECOMMENDED SUZUKI PRODUCT	USE
Lithium grease	SUZUKI SUPER GREASE A (99000-25010)	Oil seal lip
Sealant	SUZUKI BOND NO. 1215 (99000-31110)	● Joint seam of axle housing and brake back plate ● Joint seam of differential carrier and axle housing
Gear oil	For gear oil information, refer to SECTION 7E of this manual.	Differential gear (Rear axle housing)

SPECIAL TOOLS

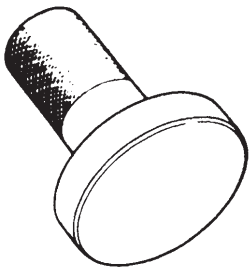 09913-75520 Bearing installer	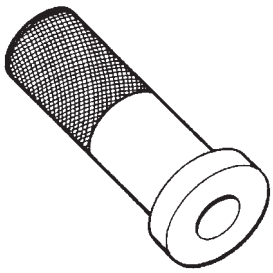 09913-85210 Oil seal installer	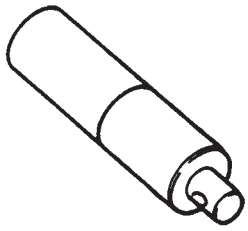 09924-74510 Bearing installer handle	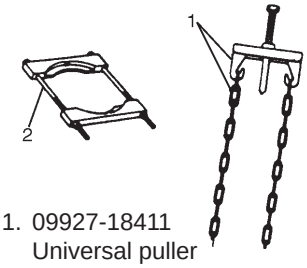 1. 09927-18411 Universal puller 2. 09921-57810 Bearing remover
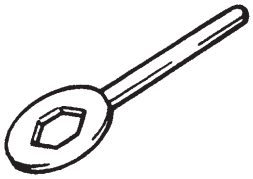 09941-66010 Bump stopper wrench	 09942-15510 Sliding hammer	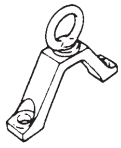 09943-35511 or 09943-35512 Brake drum remover	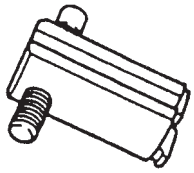 09944-96010 Bearing outer race remover 09921-26010 Bearing outer race remover collar
 09951-16030 Bush remover	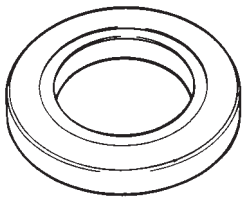 09951-26010 Bush remover plate		

SECTION 5

BRAKES

WARNING:
For lifting point of vehicle, refer to SECTION 0A.

WARNING:
For vehicles equipped with Supplement Restraint (Air Bag) System:

- **Service on and around the air bag system components or wiring must be performed only by an authorized SUZUKI dealer. Refer to "Air Bag System Components and Wiring Location View" under "General Description" in air bag system section in order to confirm whether you are performing service on or near the air bag system components or wiring. Please observe all WARNINGS and "Service Precautions" under "On-Vehicle Service" in air bag system section before performing service on or around the air bag system components or wiring. Failure to follow WARNINGS could result in unintentional activation of the system or could render the system inoperative. Either of these two conditions may result in severe injury.**
- **Technical service work must be started at least 90 seconds after the ignition switch is turned to the "LOCK" position and the negative cable is disconnected from the battery. Otherwise, the system may be activated by reserve energy in the Sensing and Diagnostic Module (SDM).**

NOTE:

- **For the descriptions (items) not found in this section, refer to the same section of the Service Manual mentioned in the FOREWORD of this manual.**
- **When inspecting and servicing vehicle equipped with ABS, be sure to refer to section 5E first.**
- **All brake fasteners are important attaching parts in that they could affect the performance of vital parts and systems, and/or could result in major repair expense. They must be replaced with one of same part number or with an equivalent part if replacement becomes necessary. Do not use a replacement part of lesser quality or substitute design. Torque values must be used as specified during reassembly to assure proper retention of all parts. There is to be no welding as it may result in extensive damage and weakening of the metal.**

CONTENTS

GENERAL DESCRIPTION 5-2
P (Proportioning) Valve 5-3
BRAKE HOSE/PIPE R & I 5-3
Remove and Install Front Brake Hose/Pipe 5-3
P (Proportioning) Valve R & I 5-6
Remove and Install P Valve 5-6
TIGHTENING TORQUE SPECIFICATIONS 5-7
REQUIRED SERVICE MATERIALS 5-7
SPECIAL TOOLS 5-8

GENERAL DESCRIPTION

When the foot brake pedal is depressed, hydraulic pressure is developed in the master cylinder to actuate pistons (two in front and four in rear).
The master cylinder is a tandem master cylinder. Three (or two) brake pipes are connected to the master cylinder and they make two independent circuits. One connects front brakes (right and left) and the other connects rear brakes (right and left).
The load sensing proportioning valve (LSPV), the proportioning and bypass (P & B) valve or proportioning (P) valve is included in these circuits between the master cylinder and the rear brake.
In this brake system, the disc brake type is used for the front wheel brake and a drum brake type (leading/trailing shoes) for the rear wheel brake.
The parking brake system is mechanical. It applies brake force to only rear wheels by means of the cable and mechanical linkage system. The same brake shoes are used for both parking and foot brakes.

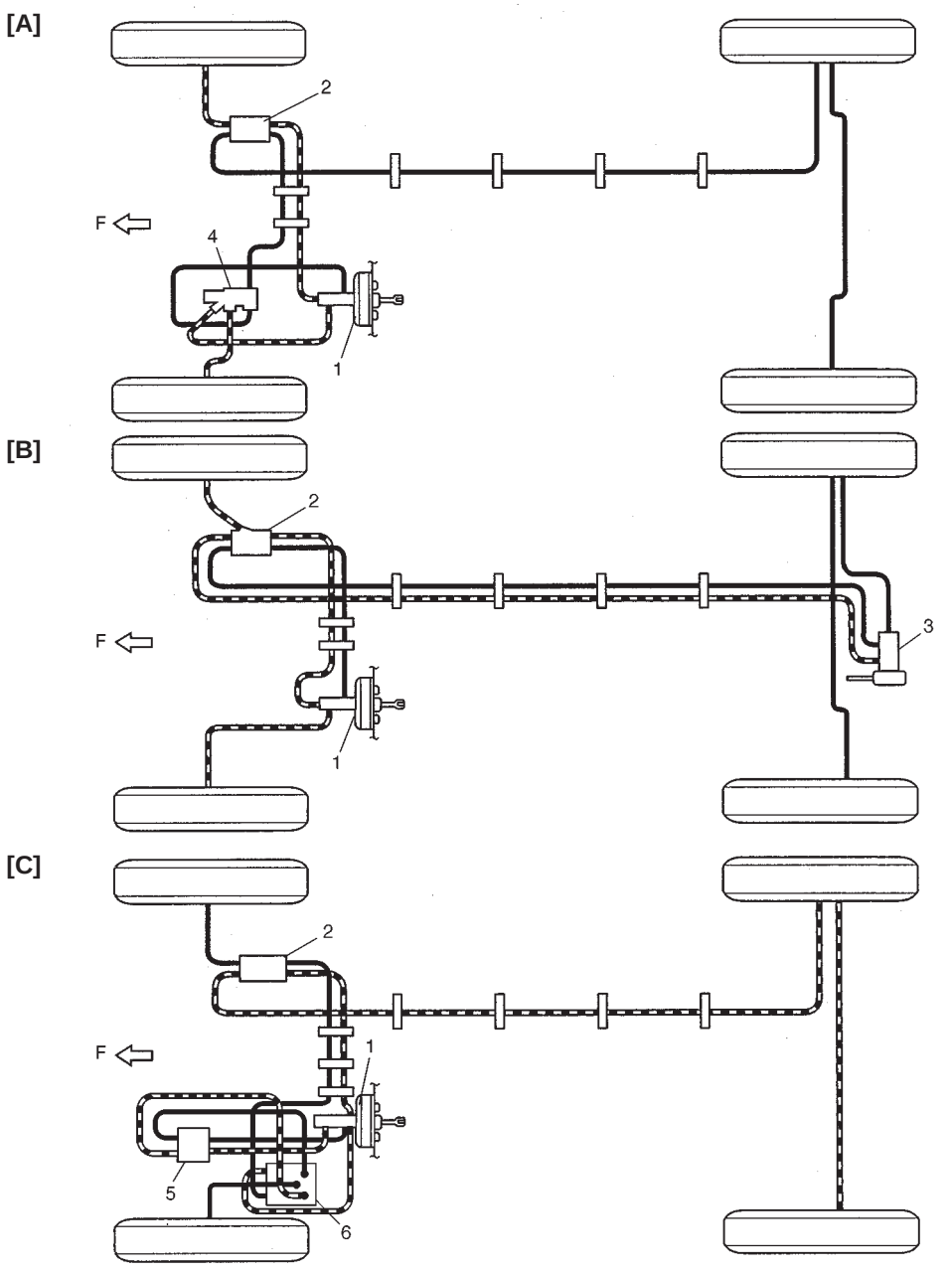

F : Forward

[A] : Vehicle without ABS, LSPV
[B] : Vehicle with LSPV
[C] : Vehicle with ABS

1. Master cylinder
2. 5-way joint (4-way joint)
3. LSPV
4. P & B valve
5. P valve
6. Hydraulic Unit

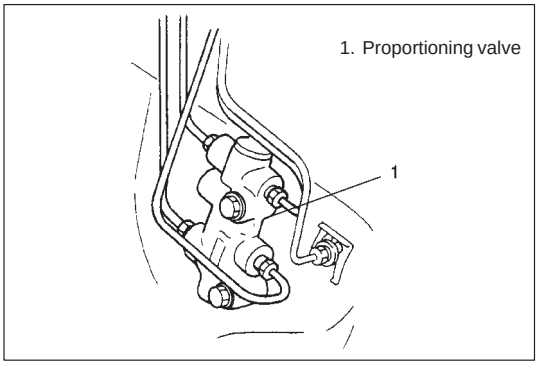

P (Proportioning) VALVE

STRUCTURE OF P VALVE

The P valve is included within the brake circuit which connects the master cylinder and ABS hydraulic unit/control module assembly. When the front brake line fails (when bleeding fluid from the brake line), the bypass line is opened to stop the proportioning valve so as to increase effect of the rear brake.

BRAKE HOSE/PIPE R & I

REMOVE AND INSTALL FRONT BRAKE HOSE/PIPE

REMOVAL

1) Raise, suitably support vehicle. Remove wheel if necessary.
2) Clean dirt and foreign material from both hose end or pipe end fittings. Remove brake hose and pipe.

INSTALLATION

1) Install brake hose and pipe by reversing removal procedure, noting the following points.
   For installation, make sure that steering wheel is in straightforward position and hose has no twist or kink. Check to make sure that hose doesn't contact any part of suspension, both in extreme right and extreme left turn conditions. If it does at any point, remove and correct. Fill and maintain brake fluid level in reservoir. Bleed brake system.
2) Perform brake test and check installed part for fluid leakage.

For LH steering vehicle without ABS

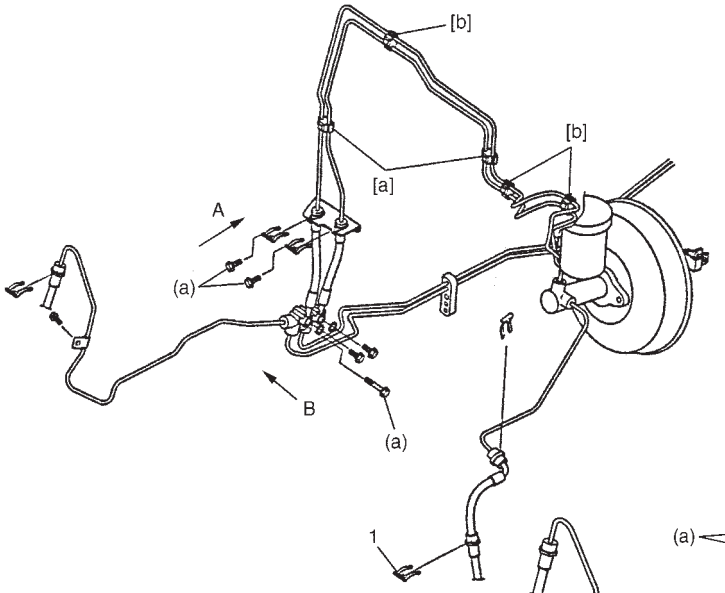

For LH steering vehicle with ABS

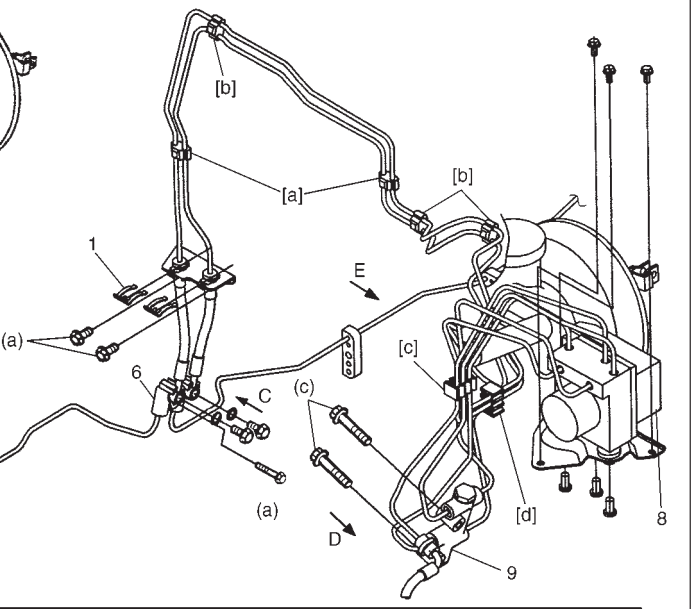

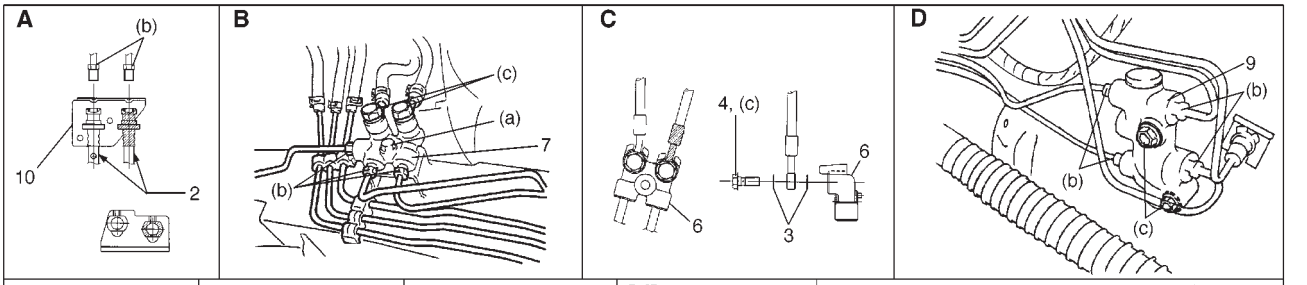

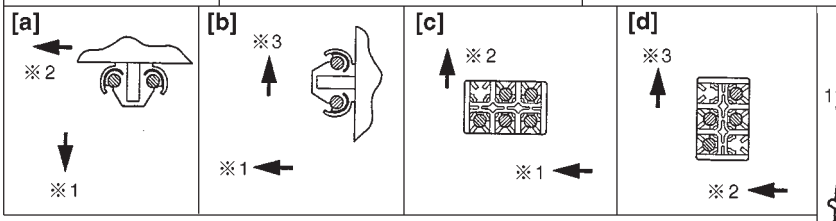

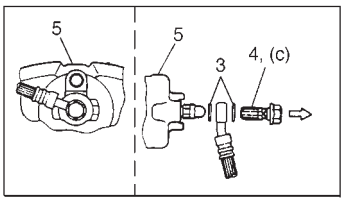

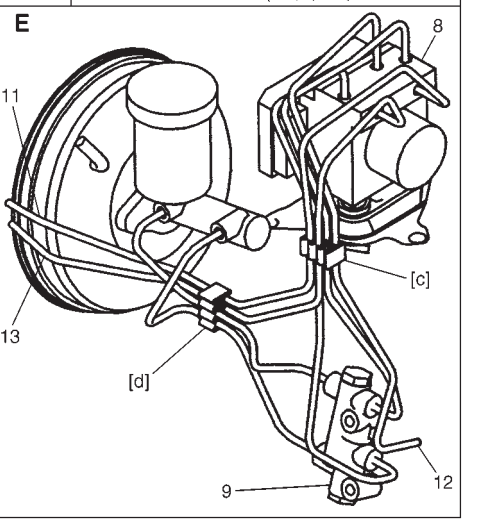

※1 : Front
※2 : Right
※3 : Top

1. E-ring
2. Flexible hose
3. Hose washer
4. Hose bolt
5. Brake caliper
6. 4 way joint
7. 5 way joint
8. ABS hydraulic unit/control module assembly
9. P valve
10. Hose bracket
11. To front right brake caliper
12. To front left brake caliper
13. To rear brake

Tightening Torque
(a) : 11 N·m (1.1 kg-m, 8.0 lb-ft)
(b) : 16 N·m (1.6 kg-m, 12.0 lb-ft)
(c) : 23 N·m (2.3 kg-m, 17.0 lb-ft)

For RH steering vehicle without ABS

For RH steering vehicle with ABS

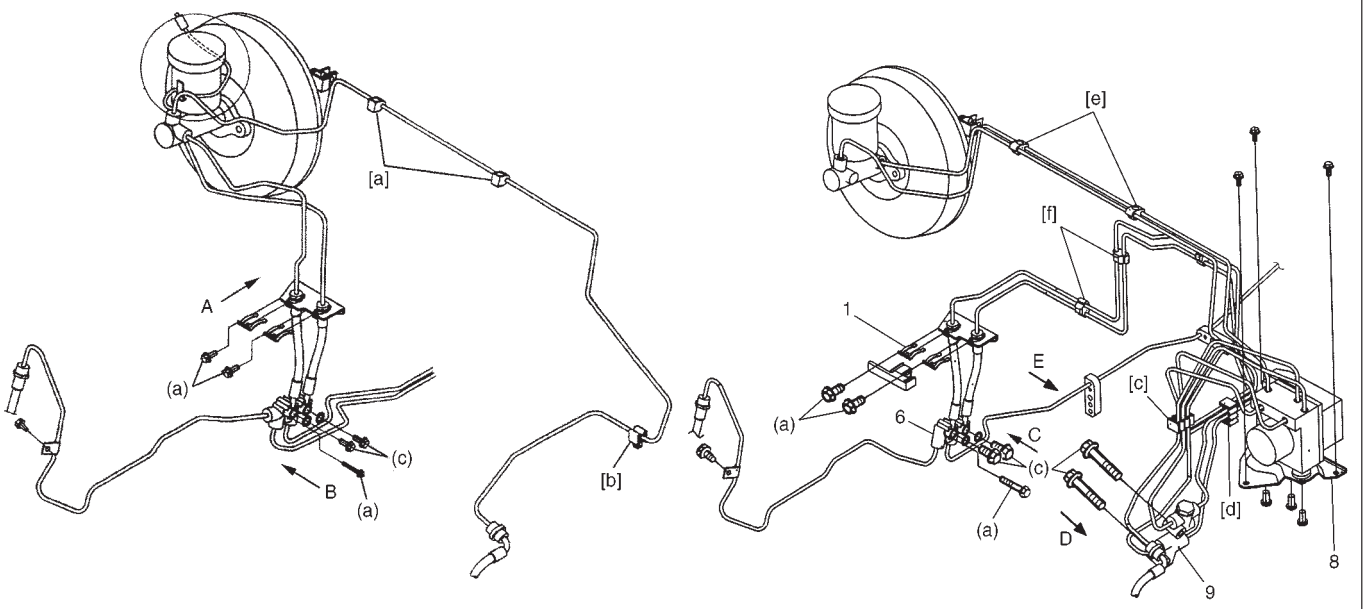

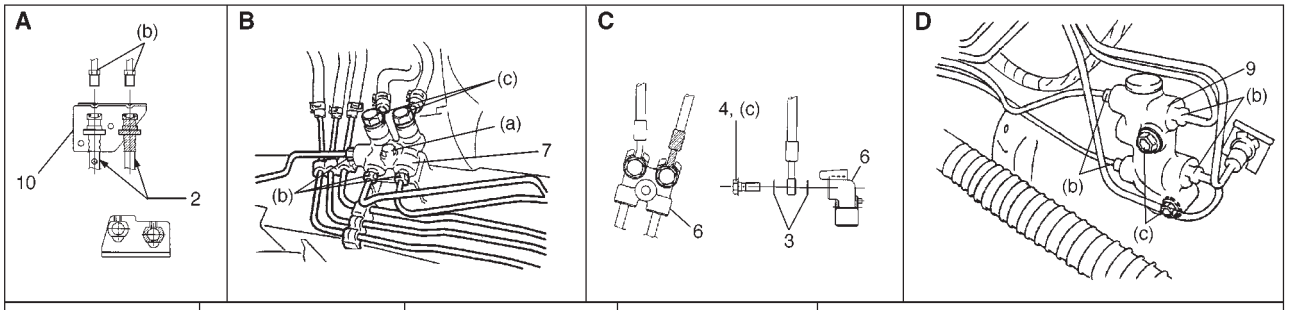

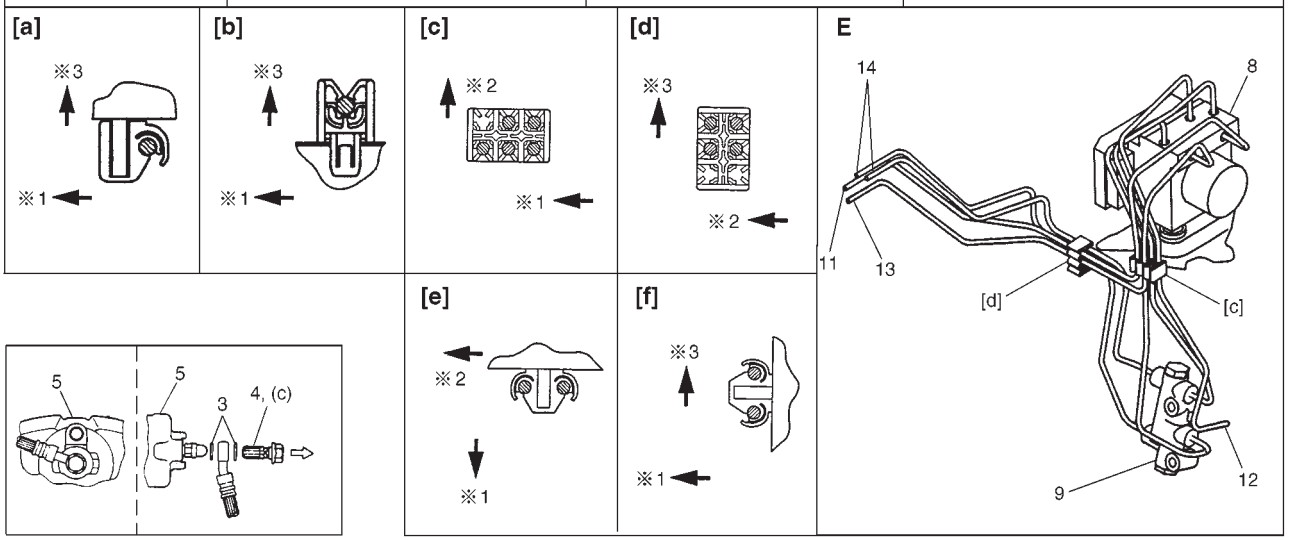

※1 : Front
※2 : Right
※3 : Top

1. E-ring
2. Flexible hose
3. Hose washer
4. Hose bolt
5. Brake caliper
6. 4 way joint
7. 5 way joint
8. ABS hydraulic unit
9. P valve
10. Hose bracket
11. To front right brake caliper
12. To front left brake caliper
13. To rear brake
14. From brake master cylinder

Tightening Torque
(a) : 11 N·m (1.1 kg-m, 8.0 lb-ft)
(b) : 16 N·m (1.6 kg-m, 12.0 lb-ft)
(c) : 23 N·m (2.3 kg-m, 17.0 lb-ft)

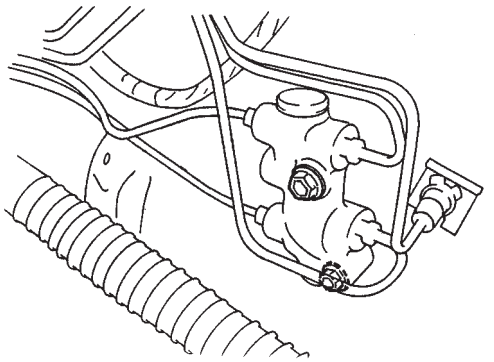

P (Proportioning) VALVE R & I

REMOVE AND INSTALL P VALVE

REMOVAL

CAUTION:
Do not allow brake fluid to get on painted surfaces.

1) Clean around reservoir cap and take out fluid with syringe or such.
2) Disconnect brake pipes from P valve.
3) Remove P valve.

WARNING:
Never disassemble P valve assembly.
If it is found faulty, replace it with new assembly.

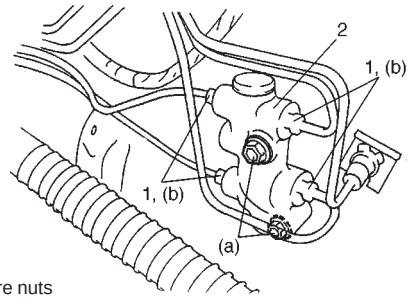

1. Flare nuts
2. P & Differential valve

INSTALLATION

1) Install P valve.
   Tightening Torque
   (a): 23 N·m (2.3 kg-m, 17.0 lb-ft)
2) Tighten flare nuts to specified torque.
   Tightening Torque
   (b): 16 N·m (1.6 kg-m, 12.0 lb-ft)
3) Fill reservoir with specified brake fluid.
4) Bleed air from system.

TIGHTENING TORQUE SPECIFICATIONS

Fastening Parts		Tightening Torque		
		N·m	kg-m	lb-ft
Brake caliper carrier bolt		85	8.5	61.5
Brake caliper pin bolt		22	2.2	16.0
Front brake flexible hose bolt		23	2.3	17.0
Brake back plate nut		23	2.3	17.0
Master cylinder nut		13	1.3	9.5
Booster nut		13	1.3	9.5
Brake pipe 5-way 4-way joint bolt		11	1.1	8.0
Brake pipe flare nut		16	1.6	12.0
LSPV bolt/P valve bolt		23	2.3	17.0
Brake bleeder plug	Front caliper	11	1.1	8.0
	Rear wheel cylinder, LSPV	8	0.8	6.0
Wheel nut		95	9.5	69.0
P & B valve bolt		6	0.6	4.5
Hose bracket bolt		10	1.0	7.5
Booster clevis nut		25	2.5	18.0

REQUIRED SERVICE MATERIALS

MATERIALS	RECOMMENDED SUZUKI PRODUCTS	USE
Brake fluid	Indicated on reservoir tank cap or described in owner's manual of vehicle	● To fill master cylinder reservoir. ● To clean and apply to inner parts of master cylinder caliper and wheel cylinder when they are disassembled.
Water tight sealant	SEALING COMPOUND 366E 99000-31090	● To apply to mating surfaces of brake back plate and rear wheel cylinder.
Sealant	SUZUKI BOND NO. 1215 99000-31110	● To apply to mating surfaces of brake back plate and rear axle housing. ● To apply to mating surfaces of brake back plate and rear wheel bearing retainer.

SPECIAL TOOLS

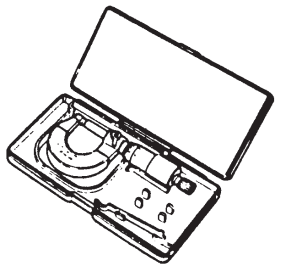 09900-20205 Micrometer (0 – 25 mm)	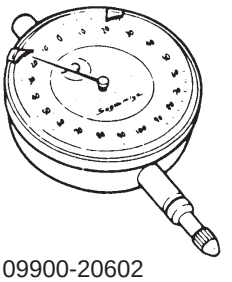 09900-20602 Dial gauge (1/1000 mm)	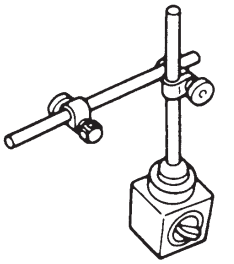 09900-20701 Magnetic stand	 09956-02210 Brake circuit plug
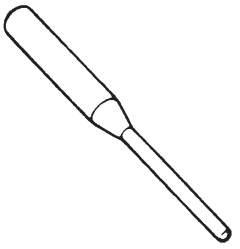 09922-85811 Connector pin remover	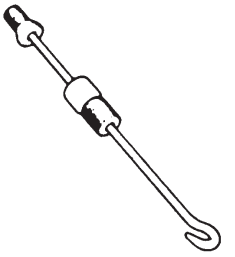 09942-15510 Sliding hammer	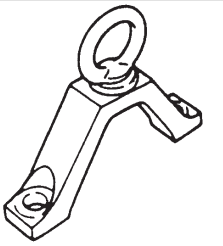 09943-35511 or 09943-35512 Brake drum remover (Front wheel hub remover)	 09950-78220 Flare nut wrench (10 mm)
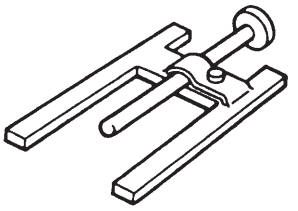 09950-96010 Booster piston rod gauge	 09952-16010 Booster piston rod adjuster	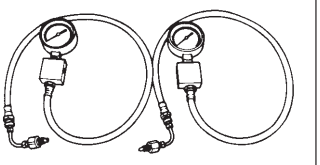 09956-02310 Fluid pressure gauge	

SECTION 5E

ANTILOCK BRAKE SYSTEM (ABS)

NOTE:

- **For the descriptions (items) not found in this section, refer to the same section of the Service Manual mentioned in the FOREWORD of this manual.**
- **All brake fasteners are important attaching parts in that they could affect the performance of vital parts and systems, and/or could result in major repair expense. They must be replaced with one of same part number or with an equivalent part if replacement part of lesser quality or substitute design. Torque values must be used as specified during reassembly to assure proper retention of all parts. There is to be no welding as it may result in extensive damage and weakening of the metal.**

CONTENTS

GENERAL DESCRIPTION 5E- 2
ABS Control Module 5E- 5
DIAGNOSIS 5E- 7
Precaution in Diagnosing Troubles 5E- 7
ABS Diagnostic Flow Table 5E- 8
"ABS" Warning Lamp Check 5E-11
Diagnostic Trouble Code (DTC) Check . . . 5E-11
Diagnostic Trouble Code (DTC) Clearance 5E-12
Diagnostic Trouble Code (DTC) Table . . . 5E-13
System Circuit 5E-14
Table–A Lamp does not come "ON" 5E-15
Table–B Lamp comes "ON" steady 5E-16
Table–C Lamp flashes 5E-17
Table–D DTC is not outputted 5E-18
DTC15 G Sensor Circuit 5E-19
DTC 16 Stop Lamp Circuit 5E-21
DTC 21, 22, 25, 26, 31, 32, 35, 36 Wheel Speed Sensor Circuit 5E-22
DTC 41, 42, 45, 46, 55, 56 Hold and Release Solenoid Circuit 5E-25
DTC 57 Power Source Circuit 5E-26
DTC 61 ABS Pump Motor Circuit 5E-27
DTC 63 ABS Fail-Safe Circuit 5E-28
DTC 71 ABS Control Module 5E-29
ON-VEHICLE SERVICE 5E-30
Precaution 5E-30
ABS Hydraulic Unit Operation Check 5E-30
ABS Hydraulic Unit/Control Module Assembly 5E-31
Front Wheel Speed Sensor 5E-33
TIGHTENING TORQUE SPECIFICATIONS 5E-36
SPECIAL TOOLS 5E-36

GENERAL DESCRIPTION

The ABS (Antilock Brake System) is a system to prevent each wheel to lock during hard braking or braking on a slippery road by controlling the fluid pressure from master cylinder to each brake (either brake caliper or wheel cylinder).

The ABS of this vehicle monitors all four wheels (four sensors) and controls all four wheels when the system is active.

The component parts of this ABS includes following parts in addition to those of the conventional brake system.

- Wheel speed sensor senses revolution speed of each wheel and sends outputs to ABS control module.
- In this ABS, ABS hydraulic unit (actuator assembly), ABS control module, pump motor transistor and fail-safe transistor are combined as one component.
- ABS control module sends operation signal to ABS hydraulic unit to control fluid pressure applied to each wheel cylinder based on signal from each wheel speed sensor so as to prevent wheel from locking.
- ABS hydraulic unit operates according to signal from ABS control module and controls fluid pressure applied to wheel cylinder of each of 4 wheels.
- Fail-safe transistor which supplies power to solenoid valve in ABS hydraulic unit.
- Pump motor transistor supplies power to pump motor in ABS hydraulic unit.
- “ABS” warning lamp lights to inform abnormality when system fails to operate properly.
- G sensor which detects body deceleration speed.

For LH Steering Vehicle

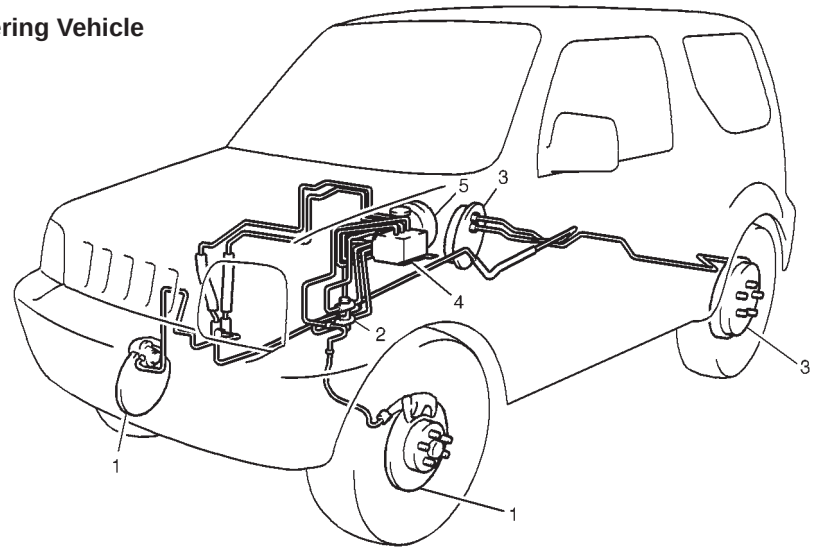

For RH Steering Vehicle

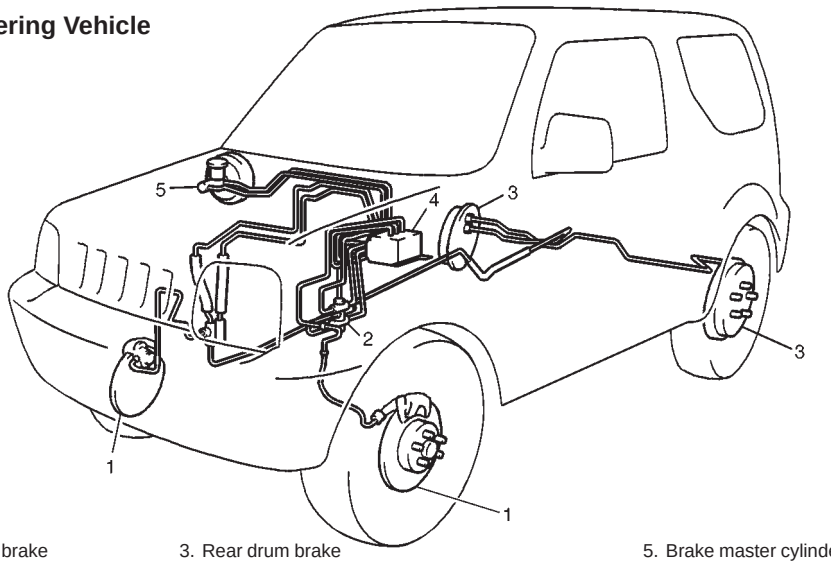

1. Front disc brake
2. Proportioning valve
3. Rear drum brake
4. ABS hydraulic unit/control module assembly
5. Brake master cylinder/booster

SYSTEM SCHEMATIC

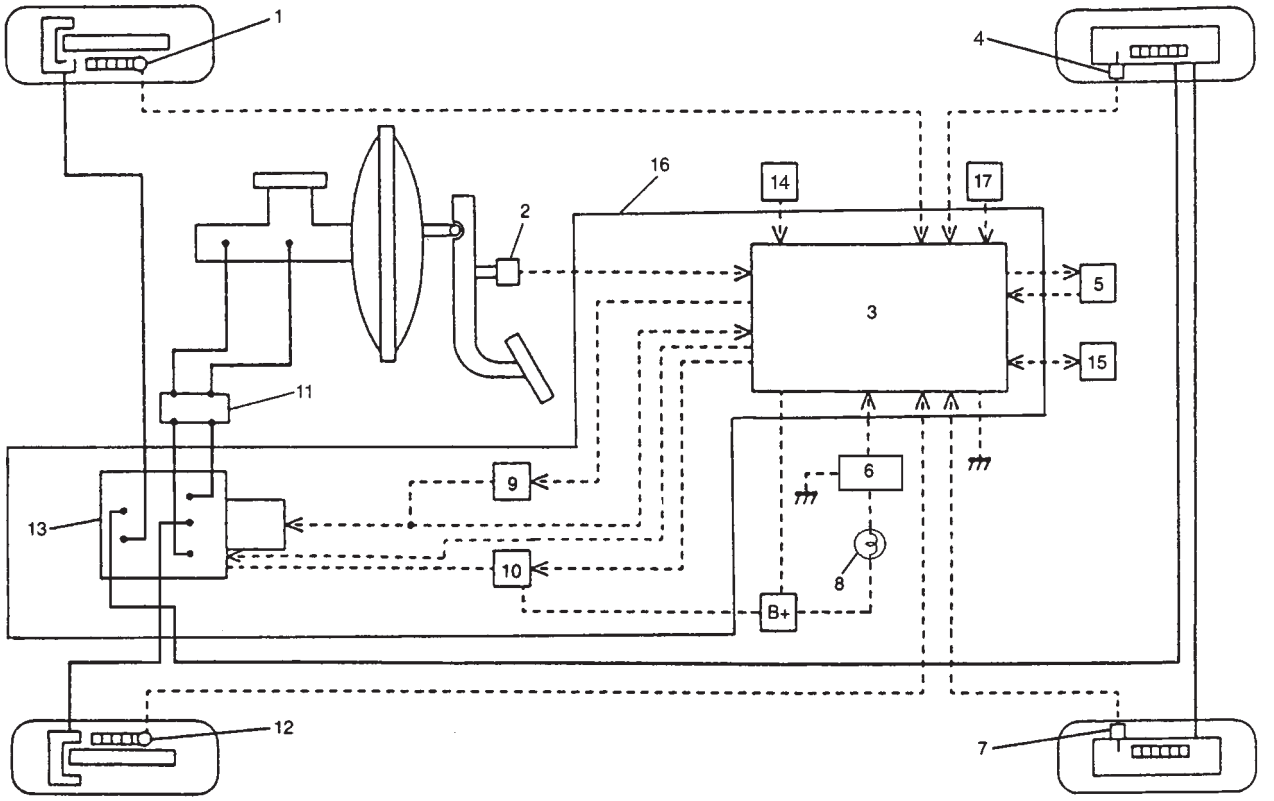

1. Wheel speed sensor (Right-front)
2. Stop lamp switch
3. ABS control module
4. Wheel speed sensor (Right-rear)
5. Monitor coupler
6. ABS lamp driver module
7. Wheel speed sensor (Left-rear)
8. "ABS" warning lamp
9. ABS pump motor transistor
10. ABS solenoid valve transistor
11. Proportioning valve
12. Wheel speed sensor (Left-front)
13. ABS hydraulic unit
14. G sensor
15. Data link connector
16. ABS hydraulic unit/control module assembly
17. 4WD switch (for 4WD model only)

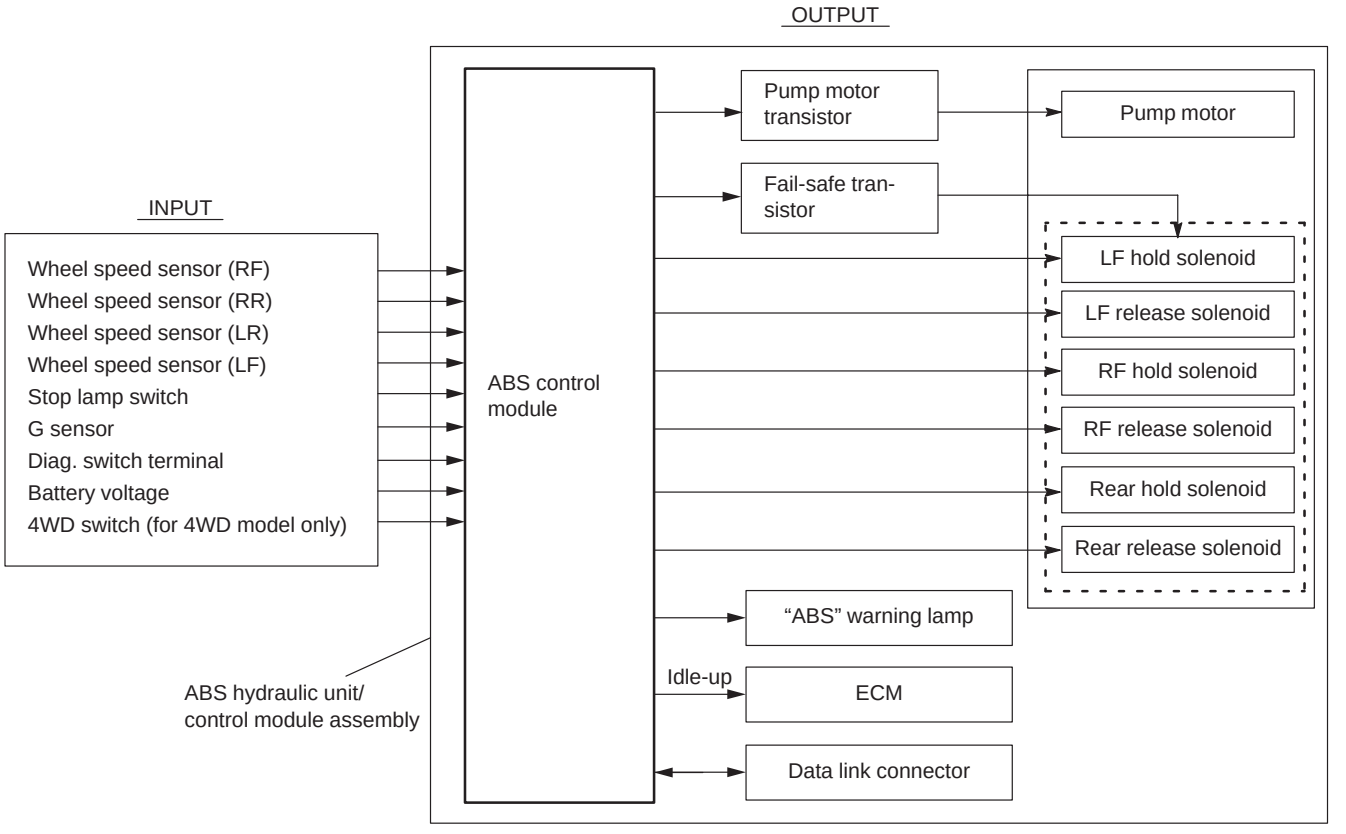

ABS COMPONENT PARTS LOCATION

For LH Steering Vehicle

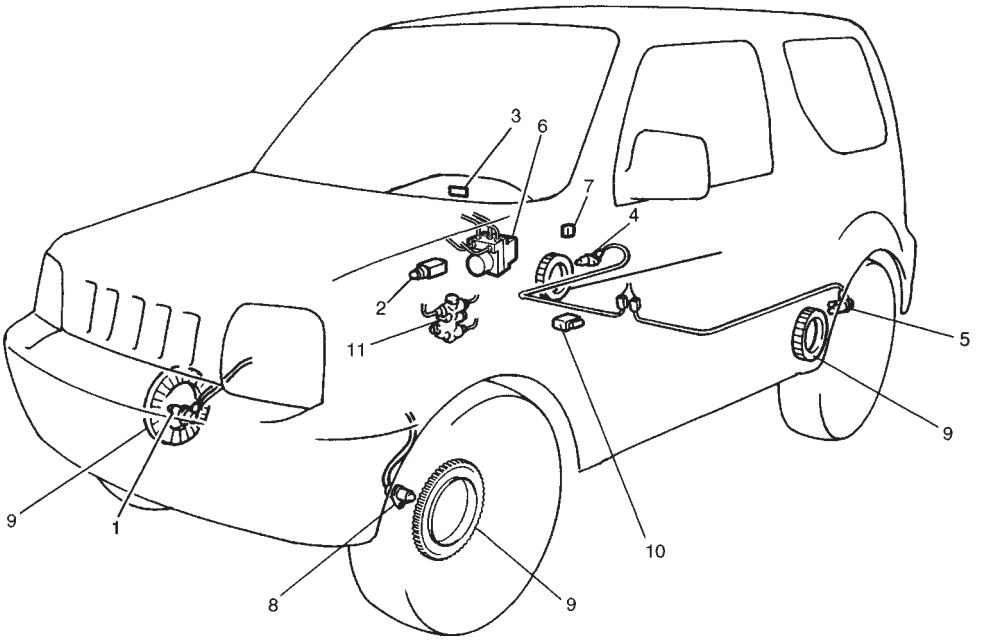

For RH Steering Vehicle

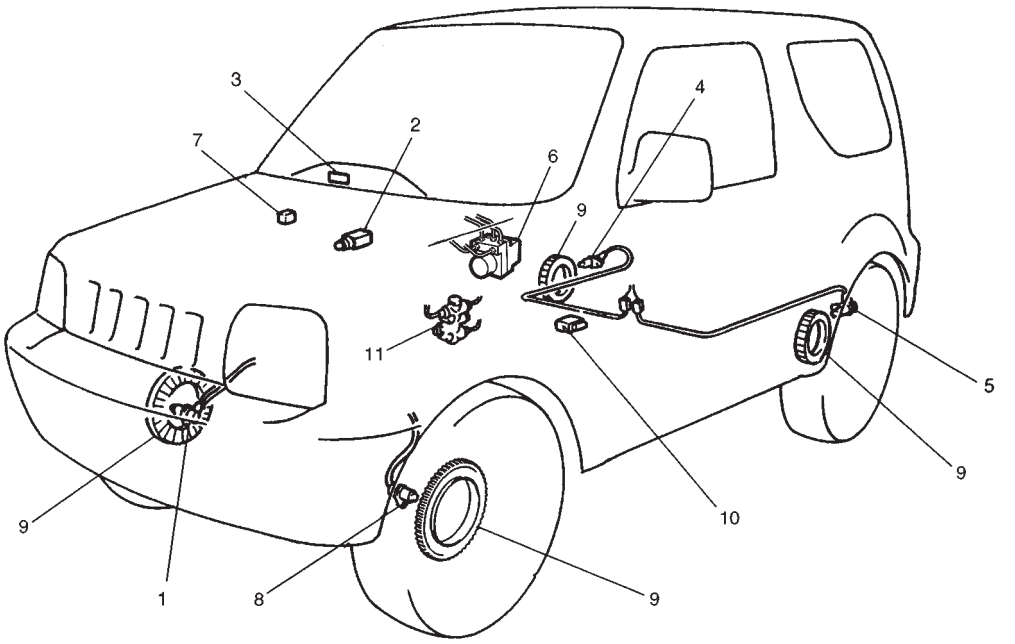

1. Wheel speed sensor (Right-front)
2. Stop lamp switch
3. "ABS" warning lamp (in combination meter)
4. Wheel speed sensor (Right-rear)
5. Wheel speed sensor (Left-rear)
6. ABS hydraulic unit/control module assembly
7. Monitor coupler
8. Wheel speed sensor (Left-front)
9. Wheel speed sensor rotor (ring)
10. G sensor
11. Proportioning valve

ABS CONTROL MODULE

Self-Diagnosis Function

ABS control module diagnoses conditions of the system component parts (whether or not there is any abnormality) all the time and indicates the results (warning of abnormality occurrence and DTC) through the “ABS” warning lamp as described below.

1) When ignition switch is turned ON, “ABS” warning lights for 2 seconds to check its bulb and circuit.
2) When no abnormality has been detected (the system is in good condition), “ABS” warning lamp turns OFF after 2 seconds.

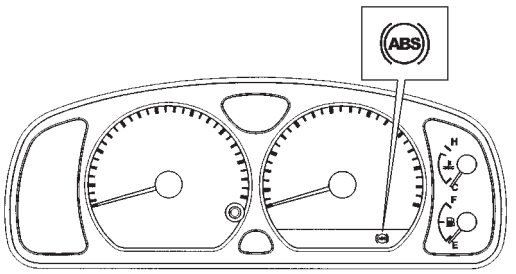

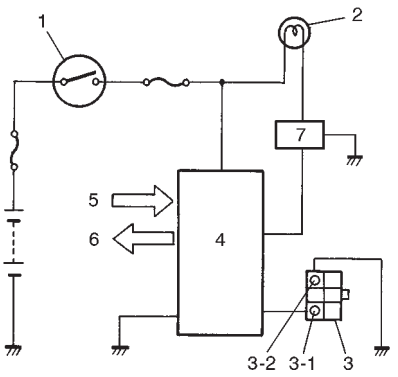

1. Ignition switch
2. "ABS" warning lamp
3. Monitor coupler
3-1. Diag. switch terminal
3-2. Ground terminal
4. ABS control module
5. Sensed information
6. Output
7. Lamp drive module

3) When an abnormality in the system is detected, "ABS" warning lamp lights and the area where that abnormality lies is stored in the memory in ABS control module.
4) When Diag. switch terminal of monitor coupler is grounded, the abnormal area is output as DTC.

SYSTEM CONDITION		DIAGNOSIS SWITCH TERMINAL	"ABS" WARNING LAMP
In good condition at present	No trouble in the past	Open	OFF
		Grounded	DTC 12
	Trouble occurred in the past	Open	OFF
		Grounded	History DTC
Abnormality exists at present	No trouble in the past	Open	ON
		Grounded	Current DTC
	Trouble occurred in the past	Open	ON
		Grounded	Current and history DTC

NOTE:
The current code and the history code are displayed without any classification.
For procedure to clear all DTC's, refer to the item "HOW TO CLEAR DIAGNOSTIC TROUBLE CODE (DTC)" in this section.

Fail-Safe Function

When an abnormality occurs (an abnormal DTC is detected), ABS control module turns OFF the fail-safe transistor which supplies power to ABS hydraulic unit. Thus, with ABS not operating, brakes function just like the brake system of the vehicle without ABS.

DIAGNOSIS

To ensure that the trouble diagnosis is done accurately and smoothly, observe “Precautions in Diagnosing Troubles” and follow “ABS Diagnostic Flow Table”.

PRECAUTION IN DIAGNOSING TROUBLES

- If the vehicles was operated in any of the following ways, “ABS” warning lamp may light momentarily but this does not indicate anything abnormal in ABS.
  –The vehicle was driven with parking brake pulled.
  –The vehicle was driven with brake dragging.
  –The vehicle was stuck in mud, sand, etc.
  –Wheel spin occurred while driving.
  –Wheel(s) was rotated while the vehicle was jacked up.
- Be sure to read “Precautions for Electronic Circuit Service” in Section 0A before inspection and observe what is written there.
- Be sure to use the trouble diagnosis procedure as described in the flow table. Failure to follow the flow table may result in incorrect diagnosis. (Some other diag. trouble code may be stored by mistake in the memory of ABS control module during inspection.)

ABS DIAGNOSTIC FLOW TABLE

Refer to the following pages for the details of each step.

STEP	ACTION	YES	NO
1	Perform customer complaint analysis, problem symptom confirmation and diagnostic trouble code check record and clearance. Is there any trouble code?	Go to Step 2.	Go to Step 5.
2	Perform driving test. Is trouble symptom identified?	Go to Step 3.	Go to Step 6.
3	Check diagnostic trouble code. Is it malfunction code?	Go to Step 4.	Go to Step 5.
4	Inspect and repair referring to applicable diagnostic trouble code table in this section. Then perform final confirmation test after clearing diagnostic trouble code. Is trouble recur?	Go to Step 7.	END.
5	Inspect and repair referring to DIAGNOSIS in Section 5. Then perform final confirmation test after clearing diagnostic trouble code. Is trouble recur?	Go to Step 7.	END.
6	Check for intermittent problems referring to INTERMITTENT AND POOR CONNECTION in Section 0A and related circuit of trouble code recorded in Step 3. Then perform final confirmation test after clearing diagnostic trouble code. Is trouble recur?	Go to Step 7.	END.
7	Perform diagnostic trouble code check record and clearance. Is there any trouble code?	Go to Step 4.	Go to Step 5.

1. CUSTOMER COMPLAINT ANALYSIS

Record details of the problem (failure, complaint) and how it occurred as described by the customer.
For this purpose, use of such a questionnaire form as shown below will facilitate collecting information to the point required for proper analysis and diagnosis.

CUSTOMER QUESTIONNAIRE (EXAMPLE)

Customer's name:	Model:	VIN:	
Date of issue:	Date Reg.	Date of problem:	Mileage:

Problem Symptoms	● "ABS" warning light abnormal: fails to turn on/fails to go off/ flashes ● Abnormal noise while vehicle is running: from motor, from valve, other_____ ● Wheel locks at braking: ● Pump motor does not stop (running): ● Braking does not work: ● Other_____
Frequency of Occurrence	● Continuous/Intermittent (times a day, a month)/ other_____
Conditions for Occurrence of Problem	● Vehicle at stop & ignition switch ON: ● When starting: at initial start only/ at every start/Other_____ ● Vehicle speed: while: while accelerating/while decelerating/at stop/ while turning/while running at constant speed/ other_____ ● Road surface condition: Paved road/rough road/snow-covered road/other_____ ● Chain equipment:
Environmental Condition	● Weather: fair/cloudy/rain/snow/other_____ ● Temperature: °F (°C)
Diagnostic Trouble Code	● First check: Normal code/malfunction code ( ) ● Second check after test drive: Normal code/malfunction code ( )

2. PROBLEM SYMPTOM CONFIRMATION

Check if what the customer claimed in Step 1 is actually found in the vehicle and if the symptom is found, determine whether it is identified as a failure. (This step should be shared with the customer if possible.) When "ABS" warning lamp is not operating correctly, proceed to "Diagnostic Flow Table-A, B or C" in this section.

3. DIAGNOSTIC TROUBLE CODE (DTC) CHECK, RECORD AND CLEARANCE

Perform "Diagnostic Trouble Code Check" as shown below, record it and then clear it referring to "Diagnostic Trouble Code Clearance" in this section.

If the malfunction DTC which was once displayed and then cleared cannot be detected (indicated) again when the ignition switch is turned ON, attempt to diagnose the trouble based on the DTC recorded in this step may mislead the diagnosis or make diagnosing difficult. Proceed to Step 4 to check ABS control module for proper self-diagnosis function.

If the malfunction DTC which was once displayed and then cleared can be detected (indicated) again when ignition switch is turned ON, proceed to Step 5.

4. DRIVING TEST

Test drive the vehicle at 40 km/h for more than a minute and check if any trouble symptom (such as abnormal lighting of "ABS" warning lamp) exists.

If the malfunction DTC is confirmed again at ignition switch ON, driving test as described in above is not necessary. Proceed to Step 5.

5. DIAGNOSTIC TROUBLE CODE CHECK

Recheck diagnostic trouble code referring to "DTC CHECK" as shown below.

6. DIAGNOSTIC TROUBLE CODE FLOW TABLE

According to Diagnostic Flow Table for the diagnostic trouble code confirmed in Step 5, locate the cause of the trouble, namely in a sensor, switch, wire harness, connector, actuator, ABS control module or other part and repair or replace faulty parts.

7. "DIAGNOSIS" IN SECTION 5

Check the parts or system suspected as a possible cause referring to "Diagnosis" in Section 5 and based on symptoms appearing on the vehicle (symptoms obtained through Step 1, 2 and 4) and repair or replace faulty parts, if any.

8. CHECK FOR INTERMITTENT PROBLEM

Check parts where an intermittent trouble is easy to occur (e.g., wire harness, connector, etc.), referring to INTERMITTENT TROUBLE in Section 0A and related circuit of trouble code recorded in Step 3.

9. FINAL CONFIRMATION TEST

Confirm that the problem symptom has gone and the ABS is free from any abnormal conditions. If what has been repaired is related to the malfunction DTC, clear the DTC once and perform test driving and confirm that a normal code is indicated.

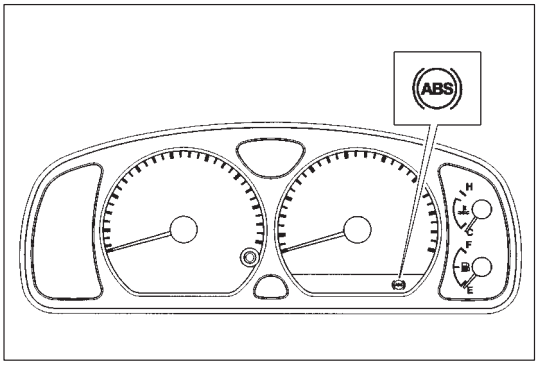

"ABS" WARNING LAMP CHECK

Turn ignition switch ON and check that "ABS" warning lamp comes ON for about 2 seconds and then goes OFF. If any faulty condition is found, advance to Diagnostic Flow Table-A, B or C.

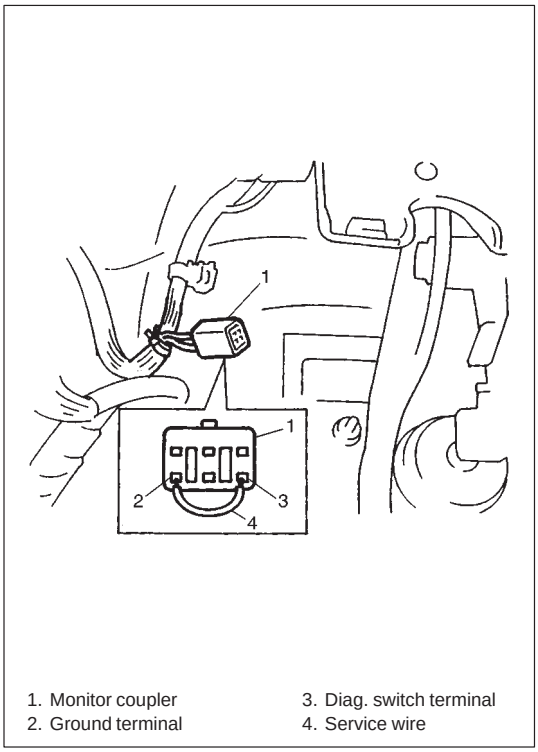

1. Monitor coupler
2. Ground terminal
3. Diag. switch terminal
4. Service wire

DIAGNOSTIC TROUBLE CODE (DTC) CHECK

1) Test drive vehicle at 40 km/h for more than a minute.
2) Stop vehicle and while IG switch OFF, connect diagnosis switch terminal and ground terminal of monitor coupler with service wire.
3) Turn IG switch ON, read the flashing "ABS" warning lamp which represents DTC as shown in example below and write it down. When more than 2 DTCs are stored in memory, flashing for each DTC is repeated three times starting with the smallest DTC number in increasing order.
   For details of DTC, refer to "DTC Table".

Example : When right-front wheel speed sensor circuit opens (DTC 21)

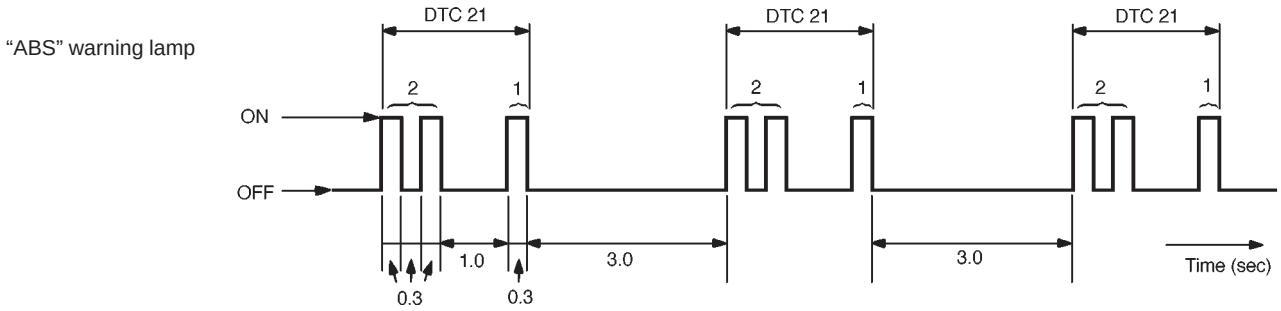

NOTE:
"ABS" warning lamp indicates only following DTCs, DTC 12 which means that no malfunction DTC is stored and history DTC which indicates history trouble area. When there is current trouble, "ABS" warning lamp remains ON and therefore DTC is not indicated.

4) After completing the check, turn ignition switch off, disconnect service wire from monitor coupler.

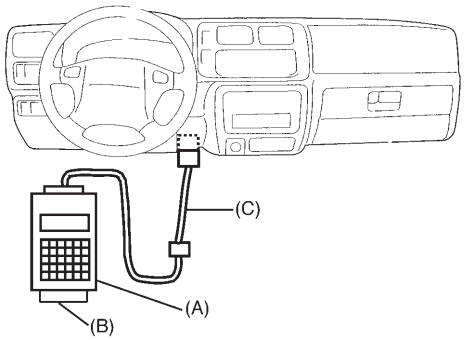

DTC CHECK (USING SUZUKI SCAN TOOL)

1) Connect SUZUKI scan tool to data link connector after setting cartridge for ABS to it.

   Special Tool
   (A): 09931-76011 (SUZUKI scan tool)
   (B): Mass storage cartridge
   (C): 09931-76030 (16/14 pin DLC cable)

2) Turn ignition switch ON.
3) Read DTC according to instructions displayed on SUZUKI scan tool and print it or write it down. Refer to SUZUKI scan tool operator's manual for further details.
4) After completing the check, turn ignition switch off and disconnect SUZUKI scan tool from DLC.

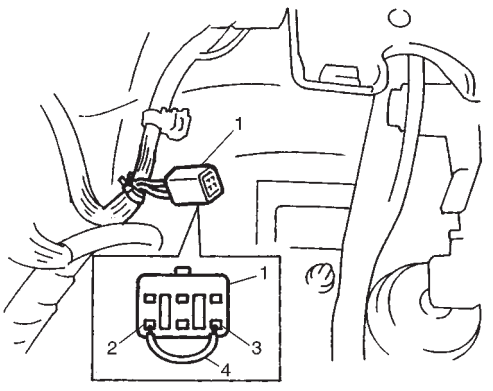

1. Monitor coupler
2. Ground terminal
3. Diag. switch terminal
4. Service wire

DIAGNOSTIC TROUBLE CODE (DTC) CLEARANCE

WARNING:
When preforming a driving test, select a safe place where there is neither any traffic nor any traffic accident possibility and be very careful during testing to avoid occurrence of an accident.

After repair or replace malfunction part(s), clear all DTC's by preforming the following procedure.

1) Turn ignition switch OFF.
2) Using service wire, connect diag. switch terminal of diag. connector to diag. ground terminal.
3) With connection described in above step 2) maintained, turn ignition switch ON.
4) Repeat ON/OFF operation of service wire at diag. ground terminal at least 5 times within 10 seconds.

   NOTE:
   Service wire ON time must be for 0.1 second and more.

5) Turn ignition switch OFF and disconnect service wire from diag. connector.
6) Perform DRIVING TEST and DTC CHECK and confirm that normal DTC (DTC 12) is displayed; not malfunction DTC.

   NOTE:
   It is also possible to clear DTC by using SUZUKI scan tool. Rear to Cartridge Manual for procedure to clear DTC.

DIAGNOSTIC TROUBLE CODE (DTC) TABLE

DTC (indicated by ABS warning lamp)	DTC (displayed on SUZUKI scan tool)	ABS warning light flashing pattern	DIAGNOSTIC ITEMS	
12	–		Normal	
15	C1015		G sensor circuit (for 4WD model only)	
16	C1016	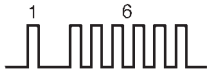	Stop lamp switch circuit	
21	C1021		RF	Wheel speed sensor circuit and/or sensor ring
25	C1025	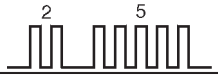	LF	
31	C1031	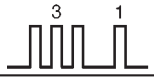	RR	
35	C1035		LR	
22	C1022	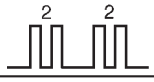	RF	
26	C1026		LF	
32	C1032	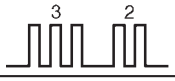	RR	
36	C1036		LR	
41	C1041		RF	Hold solenoid valve circuit
42	C1042			Release solenoid valve circuit
45	C1045		LF	Hold solenoid valve circuit
46	C1046			Release solenoid valve circuit
55	C1055		R	Hold solenoid valve circuit
56	C1056			Release solenoid valve circuit
57	C1057		Power source	
61	C1061		ABS pump motor circuit	
63	C1063		ABS solenoid valve circuit	
71	C1071	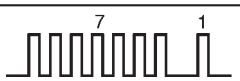	ABS control module	

SYSTEM CIRCUIT

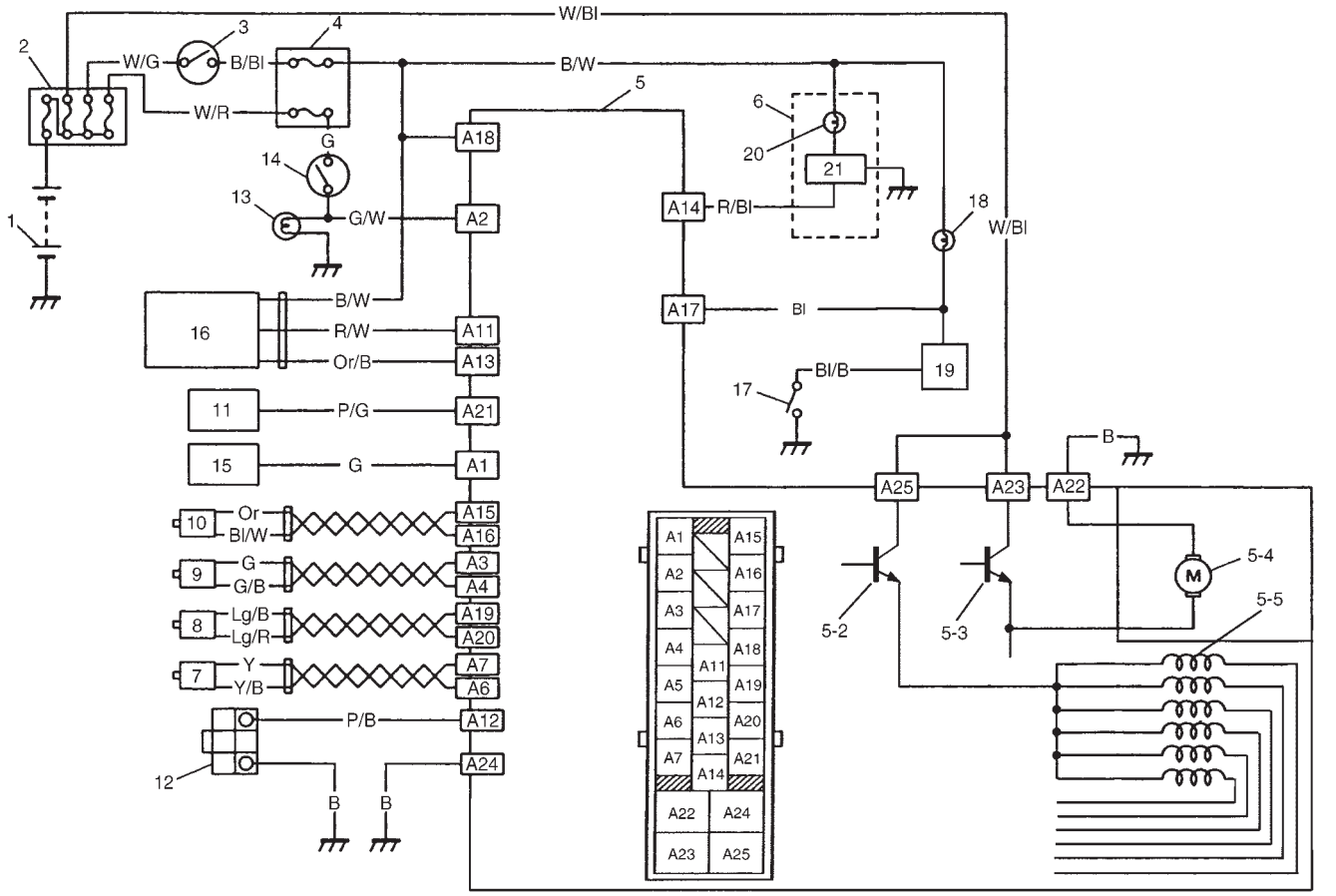

1. Battery
2. Main fuses
3. Ignition switch
4. Circuit fuses
5. ABS hydraulic unit/control module assembly

5-1. Terminal arrangement for ABS hydraulic unit/control module assembly

5-2. ABS fail-safe transistor
5-3. ABS pump motor transistor
5-4. Pump motor
5-5. Solenoid valves

6. Combination meter
7. Right-rear wheel speed sensor
8. Left-rear wheel speed sensor
9. Right-front wheel speed sensor
10. Left-front wheel speed sensor
11. Data link connector
12. Diagnosis connector
13. Stop lamp
14. Stop lamp switch
15. ECM
16. G sensor
17. 4WD switch (for 4WD model only)
18. 4WD indicator lamp (for 4WD model only)
19. 4WD controller (for 4WD model only)
20. “ABS” warning lamp
21. ABS lamp driver module

Wire color

B	: Black	Or	: Orange
B/Bl	: Black/Blue	Or/B	: Orange/Black
B/W	: Black/White	P/B	: Pink/Black
B/Or	: Black/Orange	P/G	: Pink/Green
Bl	: Blue	R/Bl	: Red/Blue
Bl/W	: Blue/White	R/W	: Red/White
G	: Green	W/Bl	: White/Blue
G/B	: Green/Black	W/G	: White/Green
G/W	: Green/White	W/R	: White/Red
Lg/B	: Light green/Black	Y	: Yellow
Lg/R	: Light green/Red	Y/B	: Yellow/Black

TERMINAL	CIRCUIT
A1	Idle up signal
A2	Stop lamp switch
A3	Right-front wheel speed sensor (+)
A4	Right-front wheel speed sensor (–)
A5	——
A6	Right-rear wheel speed sensor (–)
A7	Right-rear wheel speed sensor (+)
A8	——
A9	——
A10	——
A11	G sensor signal
A12	Diagnosis switch terminal
A13	G sensor ground
A14	“ABS” warning lamp
A15	Left-front wheel speed sensor (+)
A16	Left-front wheel speed sensor (–)
A17	4WD switch (for 4WD model only)
A18	Ignition switch
A19	Left-rear wheel speed sensor (+)
A20	Left-rear wheel speed sensor (–)
A21	Data link connector
A22	Ground (for ABS pump motor)
A23	ABS pump motor power supply
A24	Ground (for ABS control module)
A25	Solenoid valve power supply

TABLE – A "ABS" WARNING LAMP CIRCUIT CHECK – LAMP DOES NOT COME "ON" AT IGNITION SWITCH ON

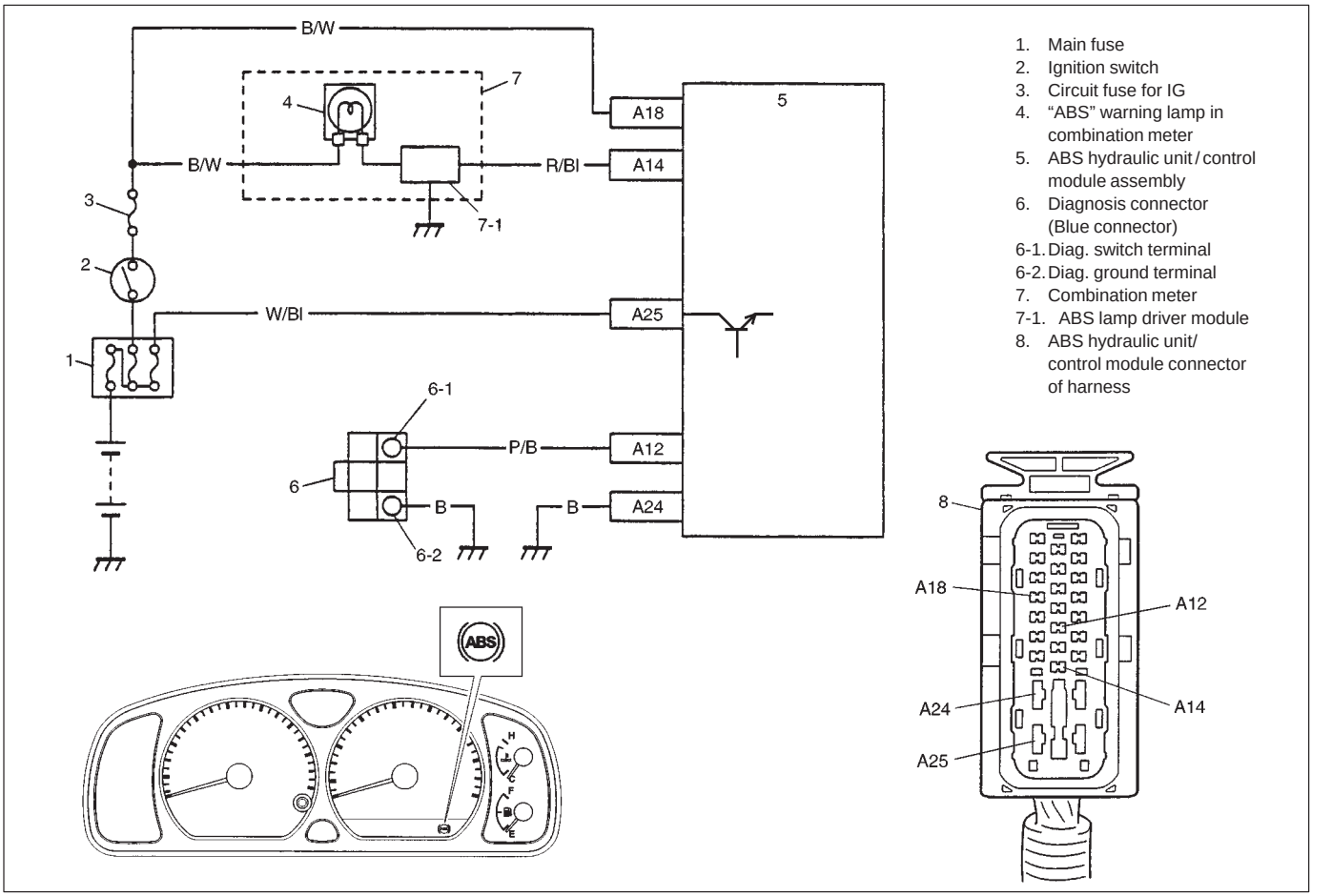

1. Main fuse
2. Ignition switch
3. Circuit fuse for IG
4. "ABS" warning lamp in combination meter
5. ABS hydraulic unit / control module assembly
6. Diagnosis connector (Blue connector)

6-1. Diag. switch terminal
6-2. Diag. ground terminal

7. Combination meter

7-1. ABS lamp driver module

8. ABS hydraulic unit/ control module connector of harness

CIRCUIT DESCRIPTION

Operation (ON/OFF) of the "ABS" warning lamp is controlled by the ABS control module and ABS lamp driver module.

If the Antilock brake system is in good condition, the ABS control module turns the "ABS" warning lamp ON at the ignition switch ON, keeps it ON for 2 seconds only and then turns it OFF. If an abnormality in the system is detected, the lamp is turned ON by ABS control module. Also, it is turned ON by ABS lamp driver module when the connector of the ABS control module was disconnected.

INSPECTION

STEP	ACTION	YES	NO
1	1) Turn ignition switch ON. Do other warning lamp come ON?	Go to step 2.	Go to step 4.
2	1) Disconnect ABS hydraulic unit/control module connector. Does ABS warning lamp light with ignition switch ON?	Replace ABS hydraulic unit/control module assembly.	Go to step 3.
3	1) Remove combination meter. Is bulb of ABS warning lamp in good condition?	"R/Bl" circuit shorted to ground. If OK, replace ABS warning circuit (lamp driver module).	Replace bulb.
4	Is IG fuse in good condition?	Open in "B/W" wire to combination meter or poor connection.	Repair and replace.

TABLE – B "ABS" WARNING LAMP CIRCUIT CHECK – LAMP COMES "ON" STEADY

Refer to TABLE – A for System Circuit Diagram and Circuit Description.

INSPECTION

STEP	ACTION	YES	NO
1	Perform diagnostic trouble code check. Is there any DTC (including code No.12, NO CODES on tech-1) exists?	Go to step 2.	Go to step 3.
2	Is malfunction DTC (other than code No.12) exists at step 1?	Go to step 7 of ABS diagnostic flow table in this section.	Go to step 3.
3	1) Disconnect ABS hydraulic unit/control module connector. (See Fig. 1) 2) Check for proper connection to ABS hydraulic unit/control module connector at terminals "A14" and "A18". 3) If OK, turn ignition switch "ON" and measure voltage at terminal A18 of connector. Is it 10 – 14 V?	Go to step 4.	"B/W" circuit open.
4	1) With ABS control module connector disconnected, turn ignition switch ON and light ABS warning lamp. 2) Connect terminal "A14" of disconnected connector to ground using service wire. Does "ABS warning lamp" turn off?	Go to step 5.	"R/Bl" circuit open. If wire and connection are OK, replace ABS lamp driver module.
5	1) Measure resistance from connector terminal "A24" to body ground. Is continuity indicated?	Substitute a known-good ABS hydraulic unit/control module assembly and re-check.	"B" circuit open.

Fig. 1

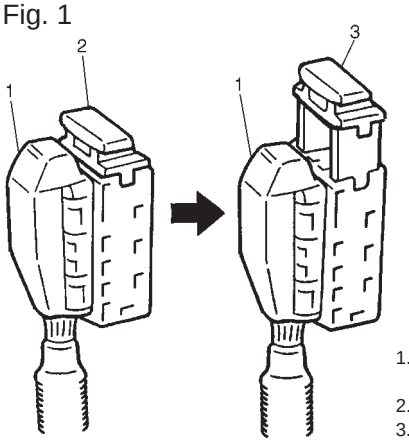

1. ABS hydraulic unit/control module connector
2. Lock position
3. Unlock position

TABLE – C "ABS" WARNING LAMP CIRCUIT CHECK – THE LAMP FLASHES CONTINUOUSLY WHILE IGNITION SWITCH IS ON

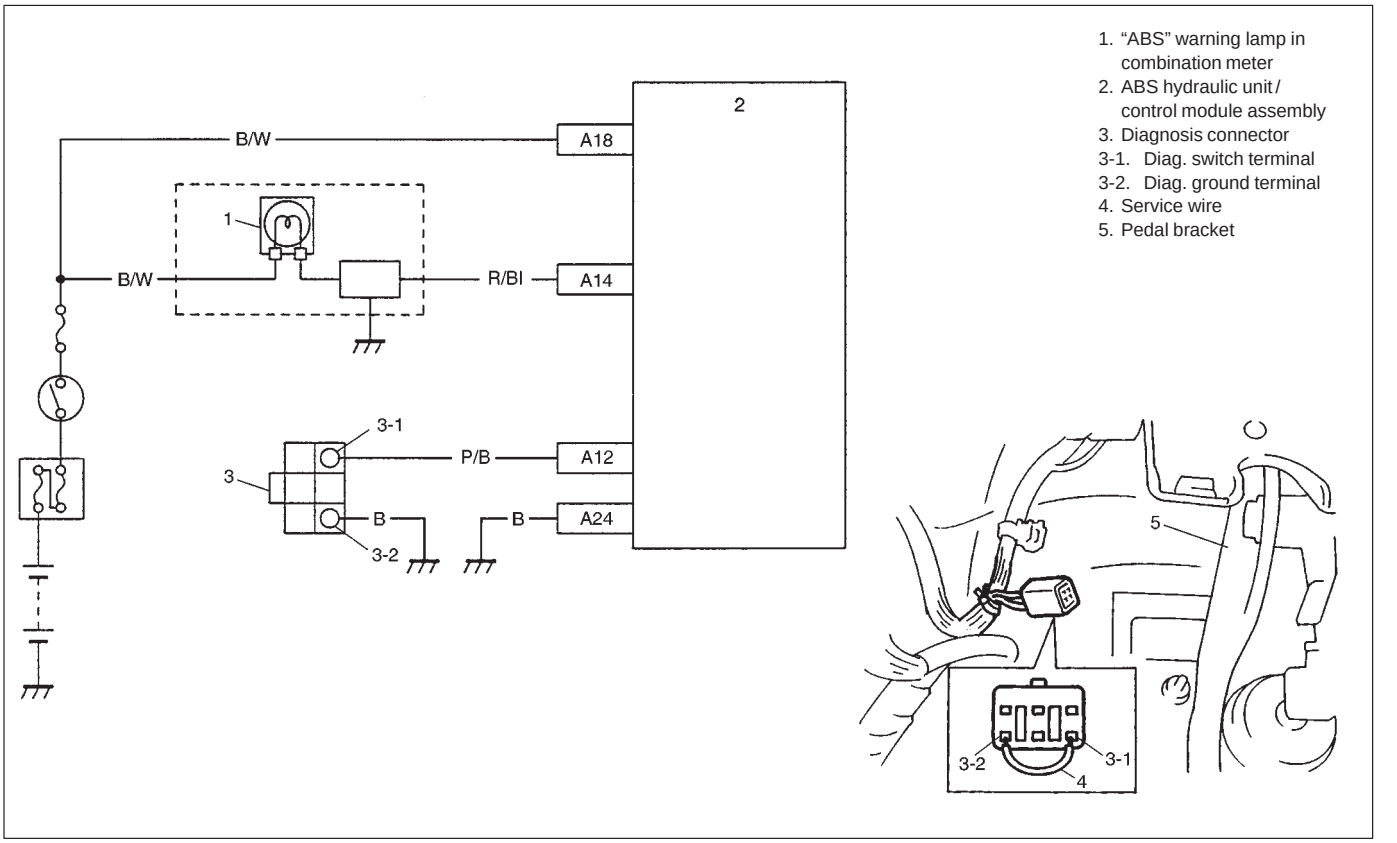

CIRCUIT DESCRIPTION

When the diag. switch terminal is shorted or connected to the ground with the ignition switch ON, the diag. trouble code (DTC) is indicated by flashing of the "ABS" warning lamp only in following cases.

- Normal DTC (12) is indicated if no malfunction DTC is detected in the ABS.
- A history malfunction DTC is indicated by flashing of the lamp if a current malfunction DTC is not detected at that point although a history malfunction DTC is stored in memory.

INSPECTION

STEP	ACTION	YES	NO
1	Is diag. switch terminal connected to ground via service wire?	Go to step 3.	Go to step 2.
2	1) Ignition switch ON. 2) Measure voltage between diag. switch terminal and ground. Is it 10 – 14 V?	Substitute a known-good ABS hydraulic unit/ control module assembly and recheck.	"P/B" wire circuit shorted to ground.
3	1) Ignition switch ON. 2) Does flashing of ABS warning lamp indicate DTC (DTC 12 or history DTC)?	Go to step 7 of ABS diagnostic flow table in this section.	Substitute a known-good ABS hydraulic unit/ control module assembly and recheck.

TABLE – D CODE (DTC) IS NOT OUTPUTTED EVEN WITH DIAG. SWITCH TERMINAL CONNECTED TO GROUND.

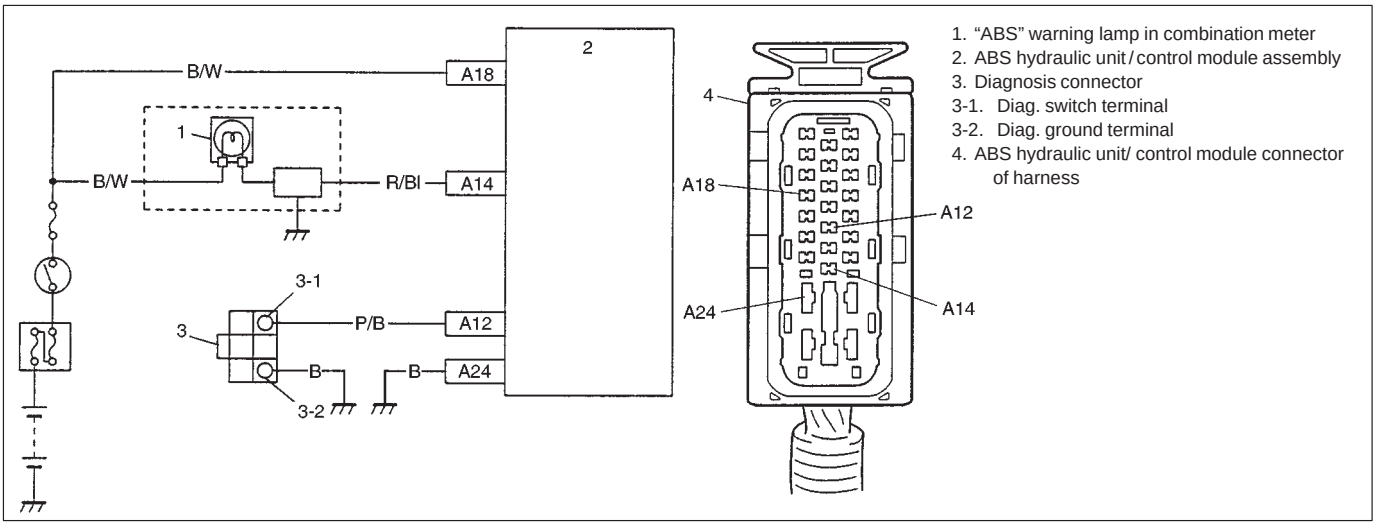

1. "ABS" warning lamp in combination meter
2. ABS hydraulic unit/control module assembly
3. Diagnosis connector
   3-1. Diag. switch terminal
   3-2. Diag. ground terminal
4. ABS hydraulic unit/ control module connector of harness

CIRCUIT DESCRIPTION

When the diag. switch terminal is connected to the ground with the ignition switch turned ON, the ABS control module outputs a diagnostic trouble code by flashing "ABS" warning lamp.

INSPECTION

STEP	ACTION	YES	NO
1	Is it shorted diag. switch terminal and ground terminal by service wire properly?	Go to step 2.	Connect service wire securely.
2	1) Disconnect service wire. 2) Disconnect ABS hydraulic unit/control module connector. (See Fig. 1) 3) Measure resistance between diag. switch terminal and connector terminal "A12". Is it infinite (∞)?	"P/B" circuit open.	Go to step 3.
3	1) Measure resistance between ground terminal of monitor connector and body ground. Is continuity indicated?	Go to step 4.	"B" circuit open or poor connection.
4	1) Check for proper connection to ABS hydraulic unit/control module at terminal "A12" and "A24". 2) If OK, then check "ABS" warning lamp circuit referring to TABLE A, B and C. Is it in good condition?	Substitute a known-good ABS hydraulic unit/control module assembly and re-check.	Repair "ABS" warning lamp circuit.

Fig. 1

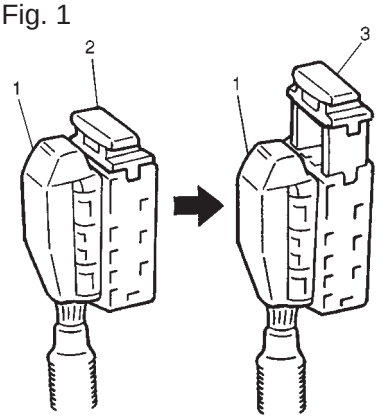

1. ABS hydraulic unit/ control module connector
2. Lock position
3. Unlock position

DTC 15 (DTC C1015) – G SENSOR CIRCUIT

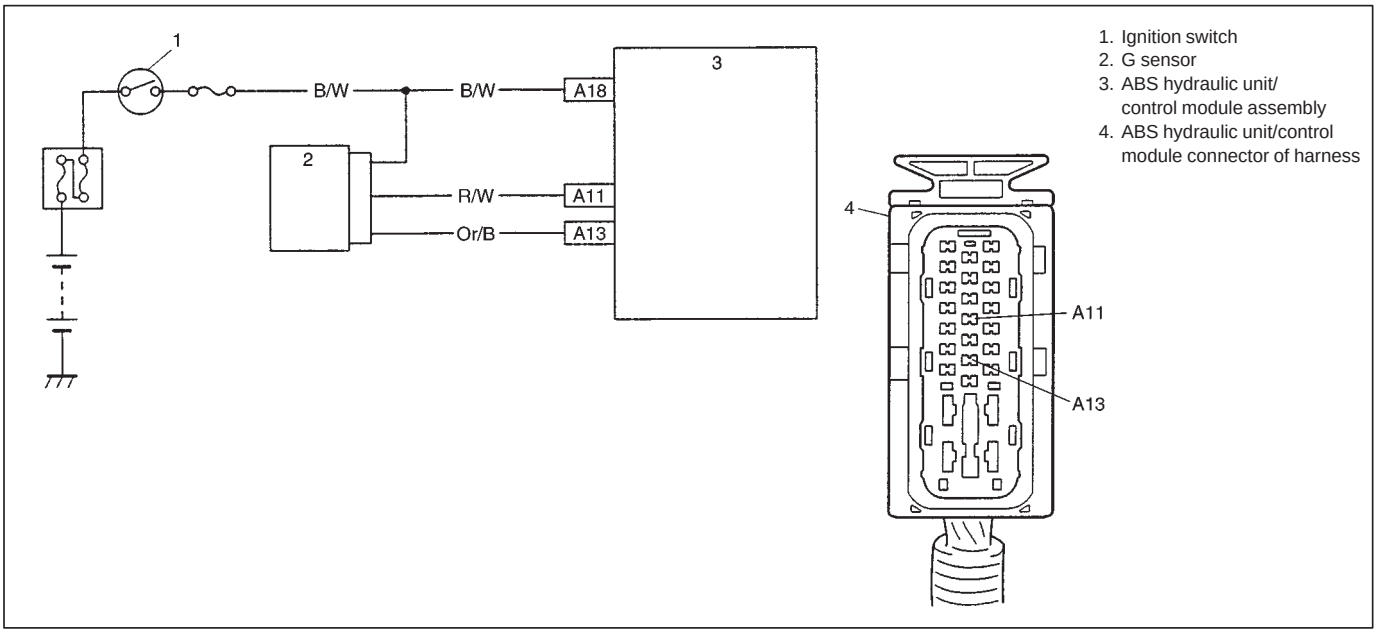

DESCRIPTION

While a vehicle is at stop or running, if the potential difference between the sensor signal terminal “A11” and the sensor ground terminal “A13” is not within the specified voltage value, or if the signal voltage while at a stop does not vary from that while running, this DTC is set.

Therefore, this DTC may be set when a vehicle is lifted up and its wheel(s) is turned. In such case, clear the DTC and check again.

INSPECTION

STEP	ACTION	YES	NO
1	Is G sensor installed floor securely?	Go to step 2.	Tighten sensor or bracket screw securely. If not, using new screw.
2	1) Ignition switch OFF. 2) Remove G sensor with bracket. 3) Check for proper connection to G sensor. 4) If OK, then check G sensor referring to item INSPECTION of G sensor. Is it in good condition?	Go to step 3.	Replace G sensor.
3	1) Disconnect connectors from ABS hydraulic unit/control module assembly (See Fig. 1) and G sensor. 2) Check for proper connection to ABS control module at terminals A11 and A13. 3) If OK, then turn ignition switch ON and measure voltage between "B/W" terminal of sensor connector and body ground. Is it 10 – 14 V?	Go to step 4.	"B/W" circuit open.
4	Measure voltage between "R/W" terminal of sensor connector and body ground. Is it 0 V?	Go to step 5.	"R/W" circuit shorted to power circuit.
5	1) Ignition switch OFF. 2) Check that "R/W" circuit is free from open or short to ground and "Or/B" circuit. Is it in good condition? (See Fig. 2)	"Or/B" circuit open. If circuit is OK, substitute a known-good ABS hydraulic unit/control module assembly.	"R/W" circuit open or shorted to ground or "Or/B" circuit.

Fig. 1

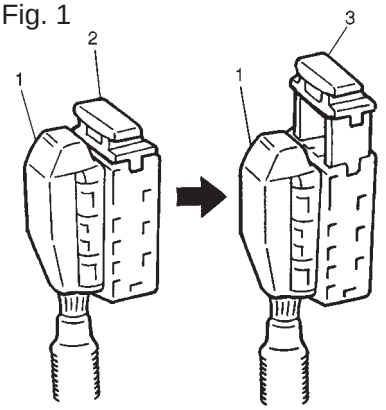

1. ABS hydraulic unit/control module connector
2. Lock position
3. Unlock position

Fig. 2

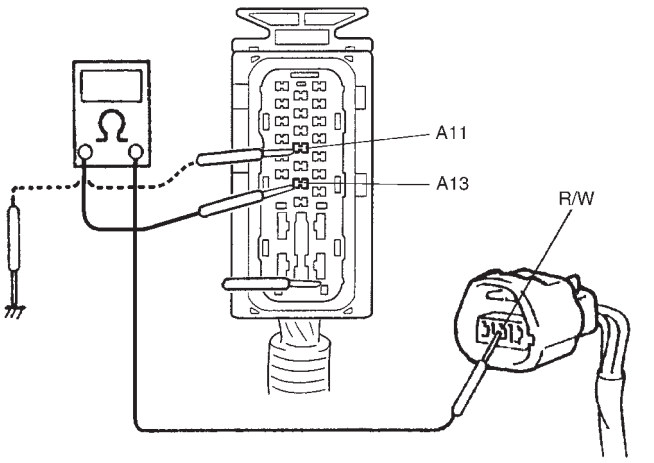

DTC 16 (DTC C1016) – STOP LAMP CIRCUIT

1. Main fuse
2. Ignition switch
3. Circuit fuse for Tail Stop
4. Circuit fuse for IG
5. Stop lamp switch
6. Stop lamp
7. ABS hydraulic unit/control module assembly
8. ABS hydraulic unit/control module connector of harness

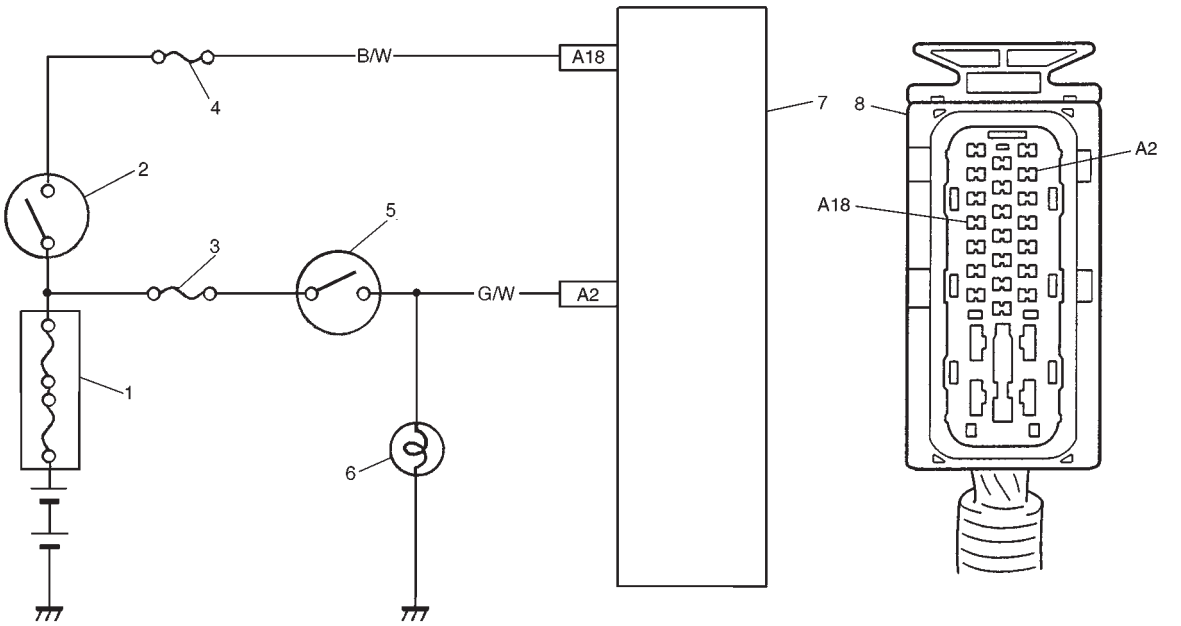

DESCRIPTION

The ABS control module monitors the voltage at the stop lamp while the ignition switch is ON. When the voltage is without the specified range at terminal “A2”, a DTC will be set.

INSPECTION

STEP	ACTION	YES	NO
1	1) Turn IG switch OFF. 2) Disconnect connectors from ABS hydraulic unit/control module assembly. 3) Depress the brake pedal. 4) Measure the voltage between the stop lamp terminal “A2” and body ground. Is it 10 – 14 V?	Check for proper connection to ABS control module at terminal “A2”. If OK, substitute a known-good ABS control module and recheck.	“G/W” circuit open.

DTC 21 (DTC C1021), 22 (DTC C1022) – RIGHT-FRONT WHEEL SPEED SENSOR CIRCUIT
25 (DTC C1025), 26 (DTC C1026) – LEFT-FRONT WHEEL SPEED SENSOR CIRCUIT
31 (DTC C1031), 32 (DTC C1032) – RIGHT-REAR WHEEL SPEED SENSOR CIRCUIT
35 (DTC C1035), 36 (DTC C1036) – LEFT-REAR WHEEL SPEED SENSOR CIRCUIT

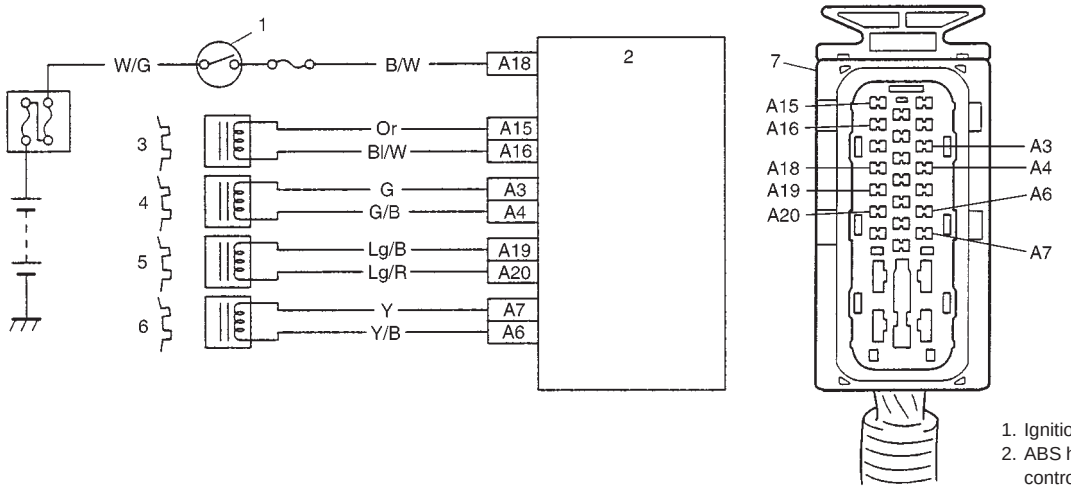

1. Ignition switch
2. ABS hydraulic unit / control module assembly
3. Left-front wheel speed sensor
4. Right-front wheel speed sensor
5. Left-rear wheel speed sensor
6. Right-rear wheel speed sensor
7. ABS hydraulic unit / control module connector of harness

DESCRIPTION

The ABS control module monitors the voltage at the positive (+) terminal of each sensor while the ignition switch is ON. When the voltage is not within the specified range, an applicable DTC will be set. Also, when no sensor signal is inputted at starting or while running, an applicable DTC will be set.

NOTE:

When the vehicle was operated in any of the following ways, one of these DTC's may be set even when the sensor is in good condition. If such possibility is suspected, repair the trouble (dragging of brake, etc.) of the vehicle, clear DTC once and then after performing the driving test as described in Step 2 of "ABS DIAG. FLOW TABLE", check whether or not any abnormality exists.

– The vehicle was driven with parking brake pulled.

– The vehicle was driven with brake dragging.

– Wheel spin occurred while driving.

– Wheel(s) was turned while the vehicle was jacked up.

– The vehicle was stuck.

INSPECTION

STEP	ACTION	YES	NO
1	1) Disconnect the applicable sensor connector with ignition switch OFF. 2) Measure resistance between sensor terminals. Resistance of wheel speed sensor: 1.4 – 1.8 kΩ (at 20°C, 68°F) 3) Measure resistance between each terminal and body ground. Insulation resistance: 1MΩ or higher Were measured resistance values in step 2) and 3) as specified? (See Fig. 1)	Go to step 2.	Replace sensor.
2	1) Ignition switch OFF. 2) Disconnect connector from ABS hydraulic unit/control module assembly. (See Fig. 2) 3) Check for proper connection to ABS hydraulic unit/control module assembly at each sensor terminal. 4) If OK, then turn ignition switch ON and measure voltage between sensor positive terminal of module connector and body ground. Is it 0V?	Go to step 3.	Sensor positive circuit shorted to power.
3	1) Ignition switch OFF. 2) Connect connector to sensor. 3) Measure resistance between sensor terminals at module connector. 4) Measure resistance between sensor positive terminal and negative terminal of module connector, between positive terminal and body ground. Are measured resistance values within each specified range described in above step 1?	Go to step 4.	Circuit open or shorted to ground.
4	1) Remove wheel speed sensor. 2) Check sensor for damage or foreign material being attached. Is it in good condition? (See Fig. 3)	Go to step 5.	Clean or replace sensor.
5	Check visually through wheel speed sensor installation hole for following. ● Rotor serration (teeth) neither missing or damaged. ● No foreign material being attached. ● Rotor not being eccentric. ● Wheel bearing free from excessive play. Are they in good condition? (See Fig. 4)	Go to step 6.	Clean, repair or replace.

STEP	ACTION	YES	NO
6	1) Install sensor to knuckle or axle housing. 2) Tighten sensor bolt to specified torque and check that there is not any clearance between sensor and knuckle or axle housing. (See Fig. 5) Replace sensor if any. Referring to item OUTPUT VOLTAGE INSPECTION of FRONT WHEEL SPEED SENSOR, check output voltage or waveform of sensor. Is proper output voltage or waveform obtained?	Substitute a known-good ABS hydraulic unit/ control module assembly and recheck.	Replace sensor and recheck.

Fig. 1

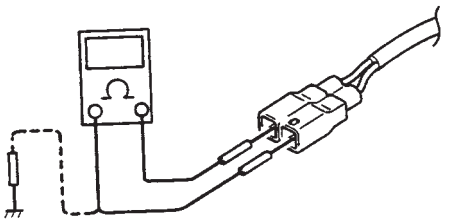

Fig. 2

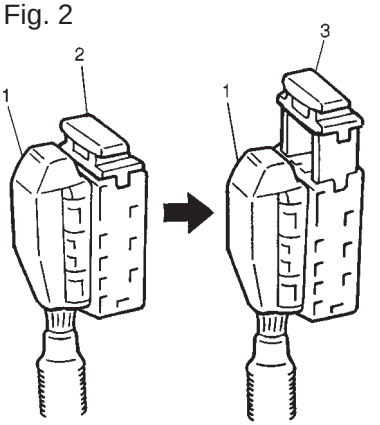

Fig. 3

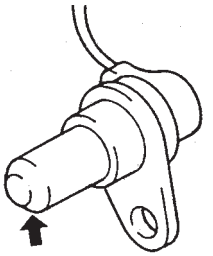

1. ABS hydraulic unit/ control module connector
2. Lock position
3. Unlock position

Fig. 4

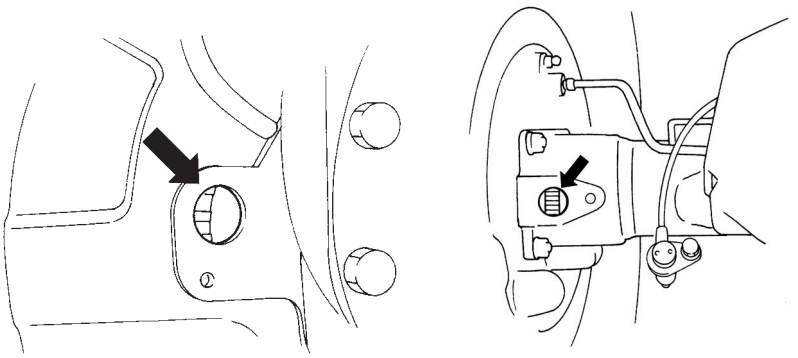

Fig. 5

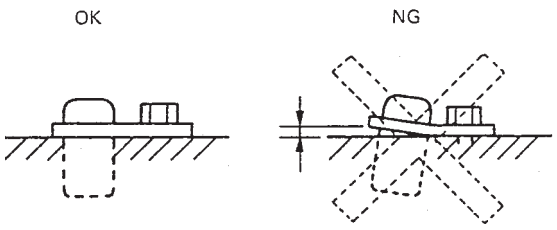

DTC 41 (DTC C1041), 42 (DTC C1042) – RIGHT-FRONT SOLENOID CIRCUIT
45 (DTC C1045), 46 (DTC C1046) – LEFT-FRONT SOLENOID CIRCUIT
56 (DTC C1056) – REAR SOLENOID CIRCUIT

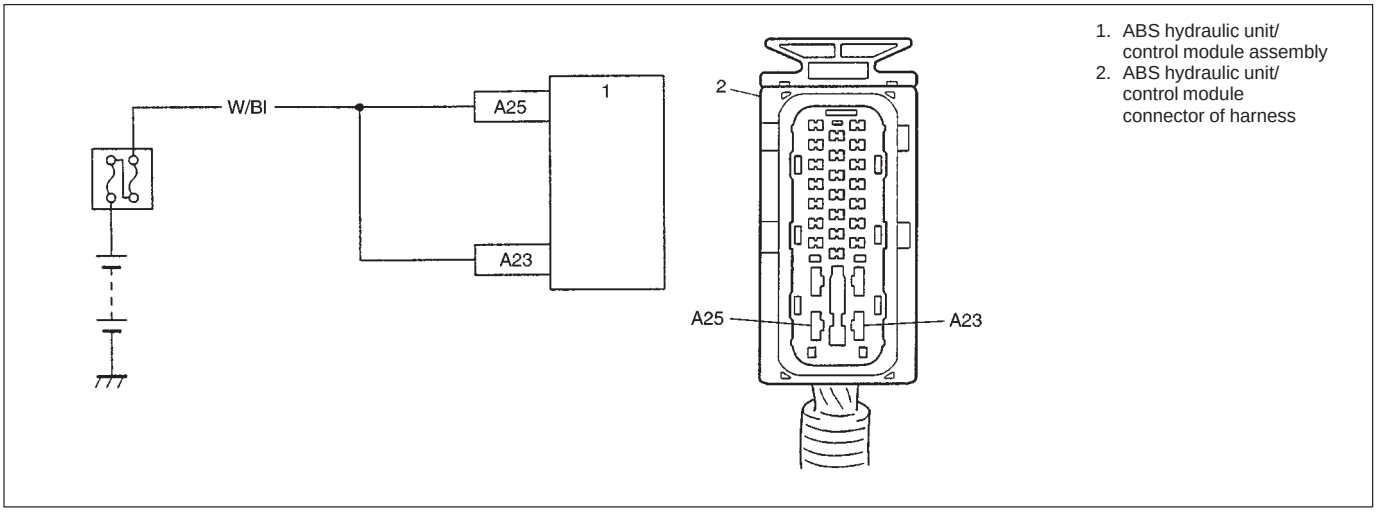

1. ABS hydraulic unit/ control module assembly
2. ABS hydraulic unit/ control module connector of harness

DESCRIPTION

The ABS control module monitors the voltage of the terminal of the solenoid circuit constantly with the ignition switch turned ON. It sets this DTC when the terminal voltage does not become low/high for the ON/OFF command to the solenoid or the voltage difference between solenoid circuit terminals exceeds the specified value with the solenoid turned OFF.

INSPECTION

STEP	ACTION	YES	NO
1	1) Check solenoid referring to item "ABS HYDRAULIC UNIT OPERATION CHECK" in this section. Is it in good condition?	Check terminals "A25" and "A23" connection. If connections OK, substitute a known-good ABS hydraulic unit/control module assembly and recheck.	Go to step 2.
2	1) Ignition switch OFF. 2) Disconnect ABS hydraulic unit/control module connector. (See Fig. 1) 3) Check for proper connection to ABS hydraulic unit/control module connector at terminal "A25". 4) If OK, then measure voltage between terminal "A25" of module connector and body ground. Is it 10 – 14 V?	Substitute a known-good ABS hydraulic unit/control module assembly and recheck.	"W/Bl" circuit open.

Fig. 1

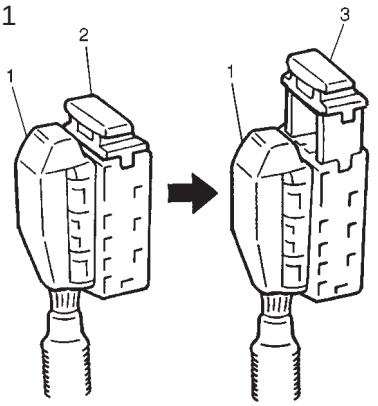

1. ABS hydraulic unit/ control module connector
2. Lock position
3. Unlock position

DTC 57 (DTC C1057) – POWER SOURCE CIRCUIT

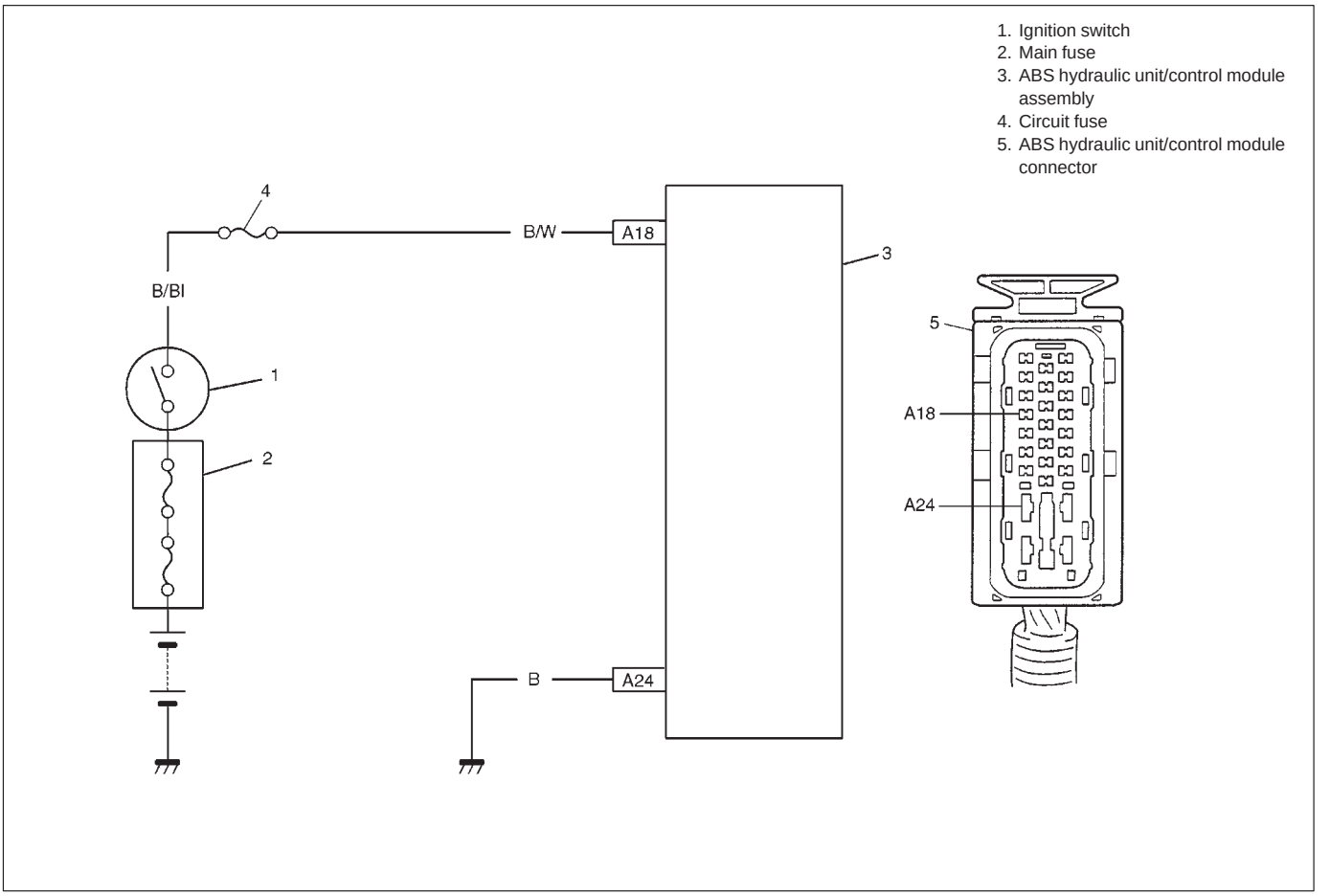

DESCRIPTION

The ABS control module monitors the power source voltage at terminal “A18”. When the power source voltage becomes extremely low, this DTC will be set. As soon as the voltage rises to the specified level, the set DTC will be cleared.

INSPECTION

STEP	ACTION	YES	NO
1	Check battery voltage. Is it about 11 V or higher?	Go to step 2.	Check charging system referring to “CHARGING SYSTEM” section.
2	Check ABS main fuse, circuit fuse and connection. Is it in good condition?	Go to step 3.	Repair and/or replace fuse.
3	1) Ignition switch OFF. 2) Disconnect ABS hydraulic unit/control module connector. 3) Check proper connection to ABS hydraulic unit/control module connector at terminal “A18”. 4) If OK, then measure voltage between connector terminal “A18” and body ground. Is it 10 – 14 V?	Substitute a known-good ABS hydraulic unit/control module assembly and recheck.	“B/W” circuit open.

DTC 61 (DTC C1061) – ABS PUMP MOTOR CIRCUIT

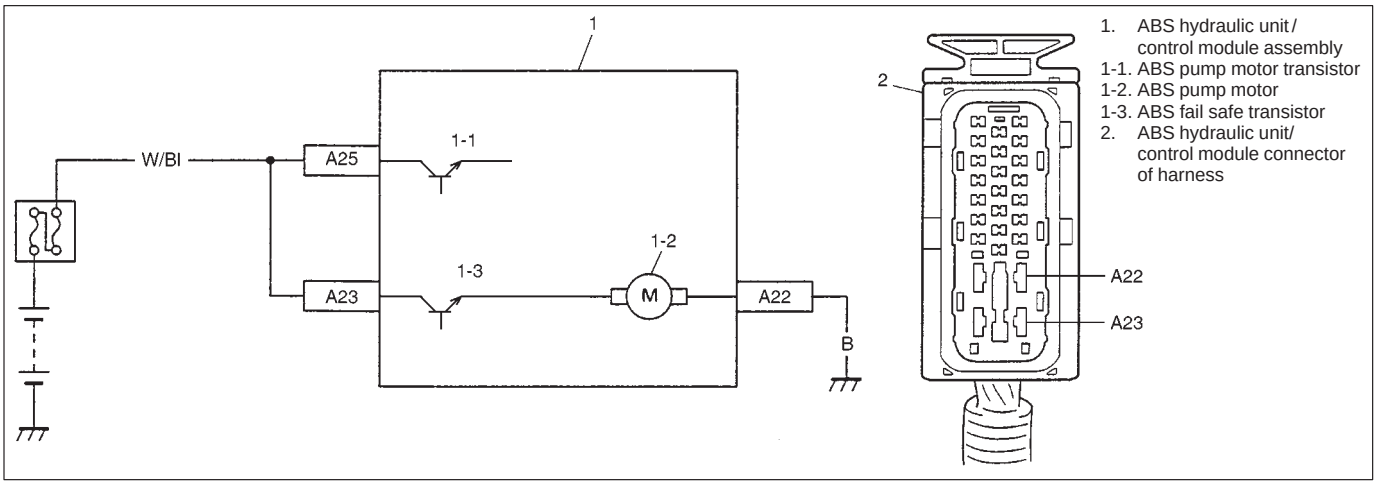

DESCRIPTION

The ABS control module monitors the voltage at the terminal A23 of the pump motor circuit constantly with the ignition switch turned ON. It sets this DTC when the voltage at the terminal A23 does not become high/low according to ON/OFF commands to the motor transistor of the module (does not follow these commands).

INSPECTION

STEP	ACTION	YES	NO
1	1) Check pump motor referring to item "ABS HYDRAULIC UNIT OPERATION CHECK" in this section. Is it in good condition?	Check terminal "A23" connection. If connections OK, substitute a known-good ABS hydraulic unit/control module assembly and recheck.	Go to step 2.
2	1) Ignition switch OFF. 2) Disconnect ABS hydraulic unit/control module connector. (See Fig. 1) 3) Check for proper connection to ABS hydraulic unit/control module connector at terminal "A23". 4) If OK, then measure voltage between terminal "A23" of module connector and body ground. Is it 10 – 14V?	Go to step 3.	"W/Bl" circuit open.
3	Measure resistance between connector terminal "A22" of ABS hydraulic unit/control module assembly and body ground. Is it infinite (∞)?	"B" circuit open.	Substitute a known-good ABS hydraulic unit/control module assembly and recheck.

Fig. 1

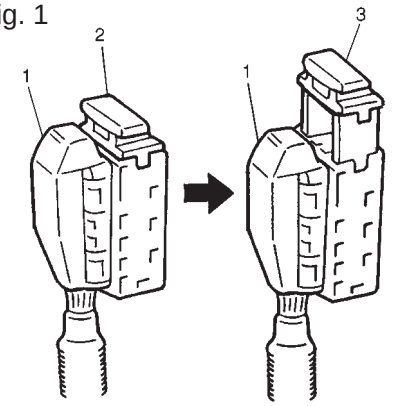

DTC 63 (DTC C1063) – ABS FAIL-SAFE CIRCUIT

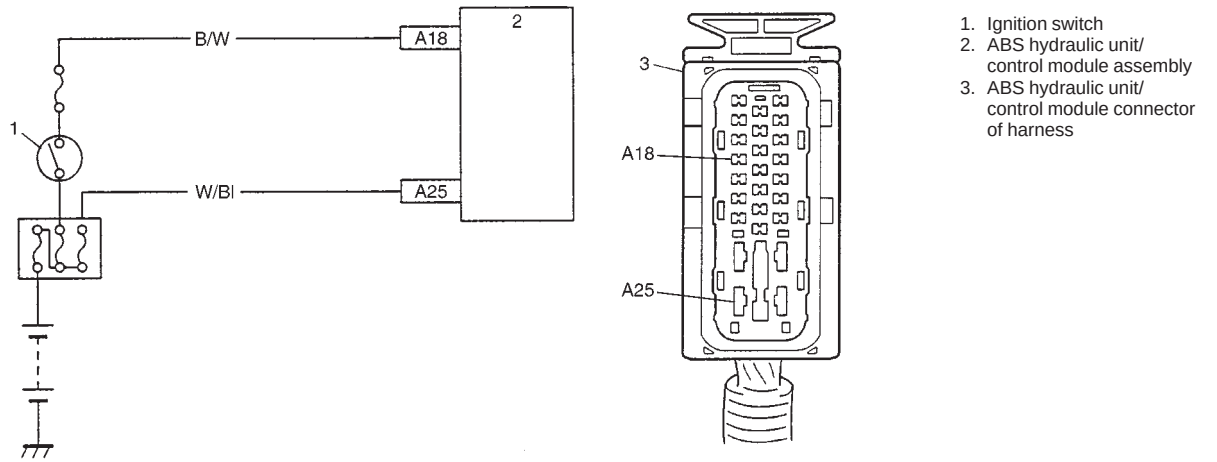

1. Ignition switch
2. ABS hydraulic unit/ control module assembly
3. ABS hydraulic unit/ control module connector of harness

DESCRIPTION

The ABS control module monitors the voltage at the terminal of the solenoid circuit constantly with the ignition switch turned ON. Also, immediately after the ignition switch is turned "ON", perform an initial check as follows. Switch the fail-safe transistor in the order of ON → OFF → ON and check if the voltage at 6 solenoid circuit terminals changes to High → Low → High. If anything faulty is found in the initial check and when the voltage at all solenoid circuit terminals is low with the ignition switch turned ON and ABS not operated, this DTC will be set.

INSPECTION

STEP	ACTION	YES	NO
1	Check battery voltage. Is it about 11 V or higher?	Go to step 2.	Check charging system referring to "CHARGING SYSTEM" section.
2	Check ABS main fuse and connection. Is it in good condition?	Go to step 3.	Repair and/or replace fuse.
3	1) Ignition switch OFF. 2) Disconnect ABS hydraulic unit/control module connector. (See Fig. 1) 3) Check proper connection to ABS hydraulic unit/control module at terminal "A25". 4) If OK, then measure voltage between connector terminal "A25", and body ground. Is it 10 – 14 V?	Substitute a known-good ABS hydraulic unit/ control module assembly and recheck.	"W/Bl" circuit open or short to ground.

Fig. 1

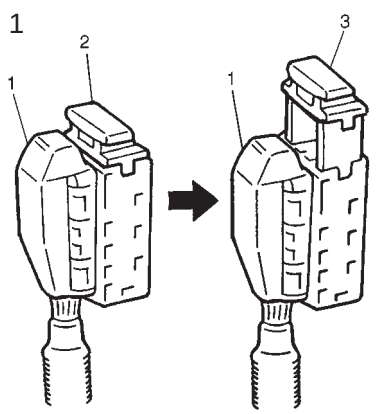

1. ABS hydraulic unit/ control module connector
2. Lock position
3. Unlock position

DTC 71 (DTC C1071) – ABS CONTROL MODULE

DESCRIPTION

This DTC will be set when an internal fault is detected in the ABS control module.

INSPECTION

STEP	ACTION	YES	NO
1	1) Ignition switch OFF. 2) Disconnect connectors from ABS control module. 3) Check for proper connection to ABS control module at all terminals. Are they in good condition?	Substitute a known-good ABS control module and re-check.	Repair or replace.

ON-VEHICLE SERVICE

PRECAUTION

When connectors are connected to ABS hydraulic unit/control module assembly, do not disconnect connectors of sensors, fuse etc. and turn ignition switch ON. Then DTC will be set in ABS control module.

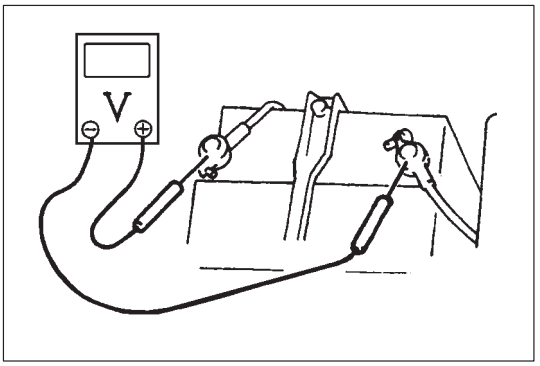

ABS HYDRAULIC UNIT OPERATION CHECK

1) Check that basic brake system other than ABS is in good condition.
2) Check that battery voltage is 11V or higher.
3) With ABS warning lamp, check that no abnormality is detected in ABS. Refer to item DIAGNOSTIC TROUBLE CODE(DTC) CHECK.
4) Lift up vehicle.
5) Set transmission to neutral and release parking brake.

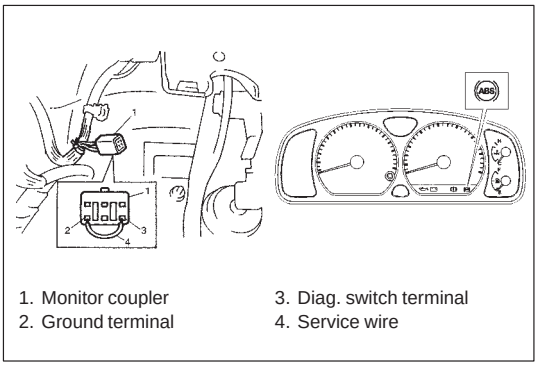

1. Monitor coupler
2. Ground terminal
3. Diag. switch terminal
4. Service wire

6) Turn each wheel gradually by hand to check if brake dragging occurs. If it does, correct.
7) With diag. switch terminal of monitor coupler connected to ground terminal by using service wire, turn ignition switch ON and check if ABS warning lamp indicates DTC 12.
   When other DTC's appear on display, refer to "ABS DIAGNOSTIC FLOW TABLE" in this section.
8) Turn ignition switch OFF.

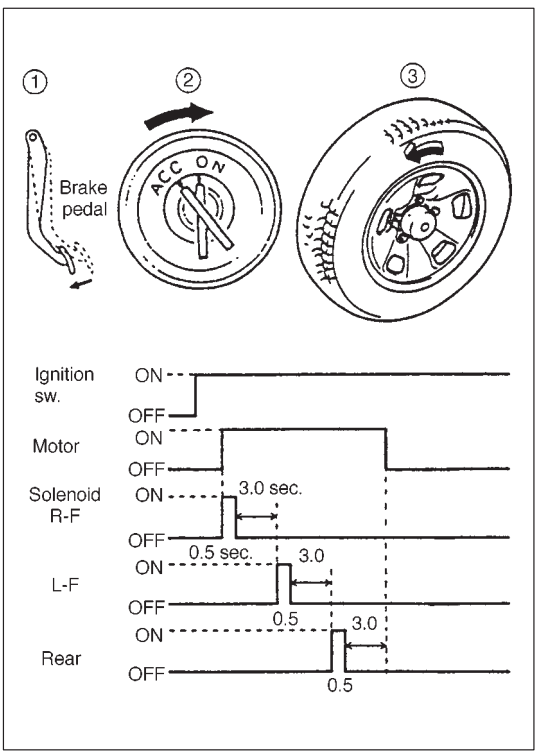

9) Perform following checks with help of another person.
   Brake pedal should be depressed and then ignition switch turned ON by one person and wheel should be turned by another person's hand. At this time, check that:
   - Operation sound of solenoid is heard and wheel turns only about 0.5 sec (Brake force is depressurized).
   - Operation sound of pump motor is heard and pulsation is felt at brake pedal.
10) If all 4-wheels cannot be checked during one ignition cycle (OFF → ON), repeat Steps 8) and 9) till all 4 wheels are checked.
    If a faulty condition is found in Steps 9) and 10), replace hydraulic unit.
11) Turn ignition switch OFF.
12) Remove service wire from monitor coupler.

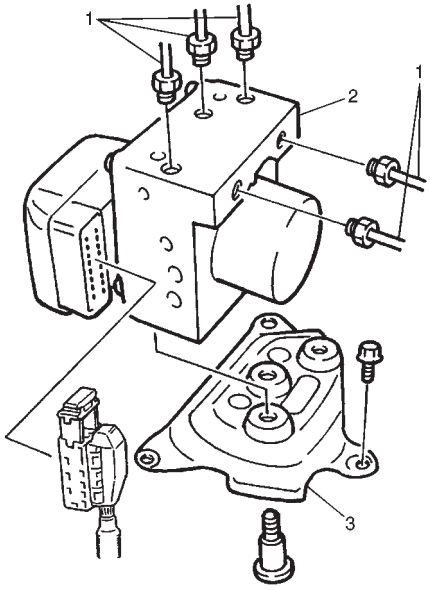

1. Brake pipe
2. ABS hydraulic unit/control module assembly
3. Bracket

ABS HYDRAULIC UNIT/CONTROL MODULE ASSEMBLY

CAUTION:
Never disassemble ABS hydraulic unit/control module assembly, loosen blind plug or remove motor. Performing any of these prohibited services will affect original performance of ABS hydraulic unit/control module assembly.

HYDRAULIC UNIT INSPECTION

- Check hydraulic unit for fluid leakage.
  If any, repair or replace.

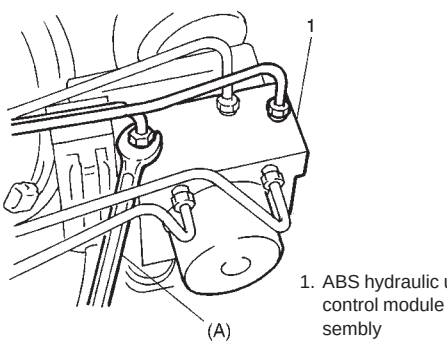

1. ABS hydraulic unit/control module assembly

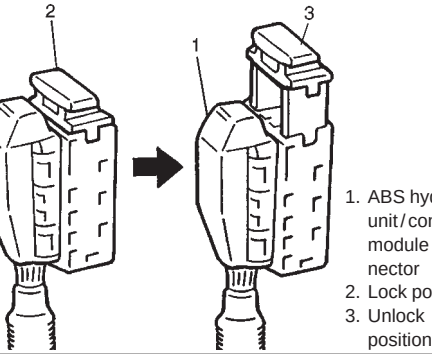

1. ABS hydraulic unit/control module connector
2. Lock position
3. Unlock position

REMOVAL

1) Disconnect negative cable at battery.
2) Using special tool, disconnect brake pipes from ABS hydraulic unit/control module assembly.

   Special Tool
   (A): 09950-78220

   NOTE:
   Put bleeder plug cap onto pipe to prevent fluid from spilling. Do not allow brake fluid to get on painted surfaces.
3) Disconnect ABS hydraulic unit/control module assembly connector by pulling up lock.
4) Remove ABS hydraulic unit/control module assembly with its bracket.

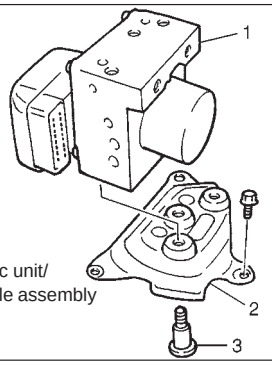

1. ABS hydraulic unit/ control module assembly
2. Bracket
3. Bolt

5) Remove three bolts and take out ABS hydraulic unit/control module assembly from bracket.

CAUTION:
- **Do not give an impact to hydraulic unit.**
- **Use care not to allow dust to enter hydraulic unit.**
- **Do not place hydraulic unit on its side or upside down. Handling it in inappropriate way will affect its original performance.**

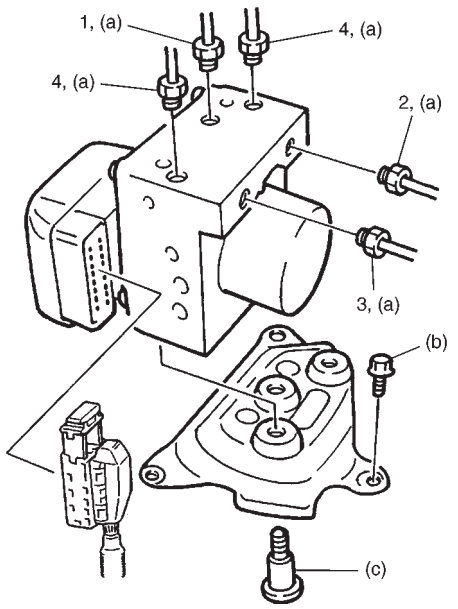

1. To left-front
2. To right-front
3. To rear
4. From proportioning valve

INSTALLATION

1) Install hydraulic unit by reversing removal procedure.

Tightening Torque
(a): 16 N·m (1.6 kg-m, 12.0 lb-ft)
(b): 11 N·m (1.1 kg-m, 8.0 lb-ft)
(c): 9 N·m (0.9 kg-m, 6.5 lb-ft)

2) Bleed air from brake system referring to “BRAKE” section.
3) Check each installed part for fluid leakage and perform hydraulic unit operation check.

FRONT WHEEL SPEED SENSOR

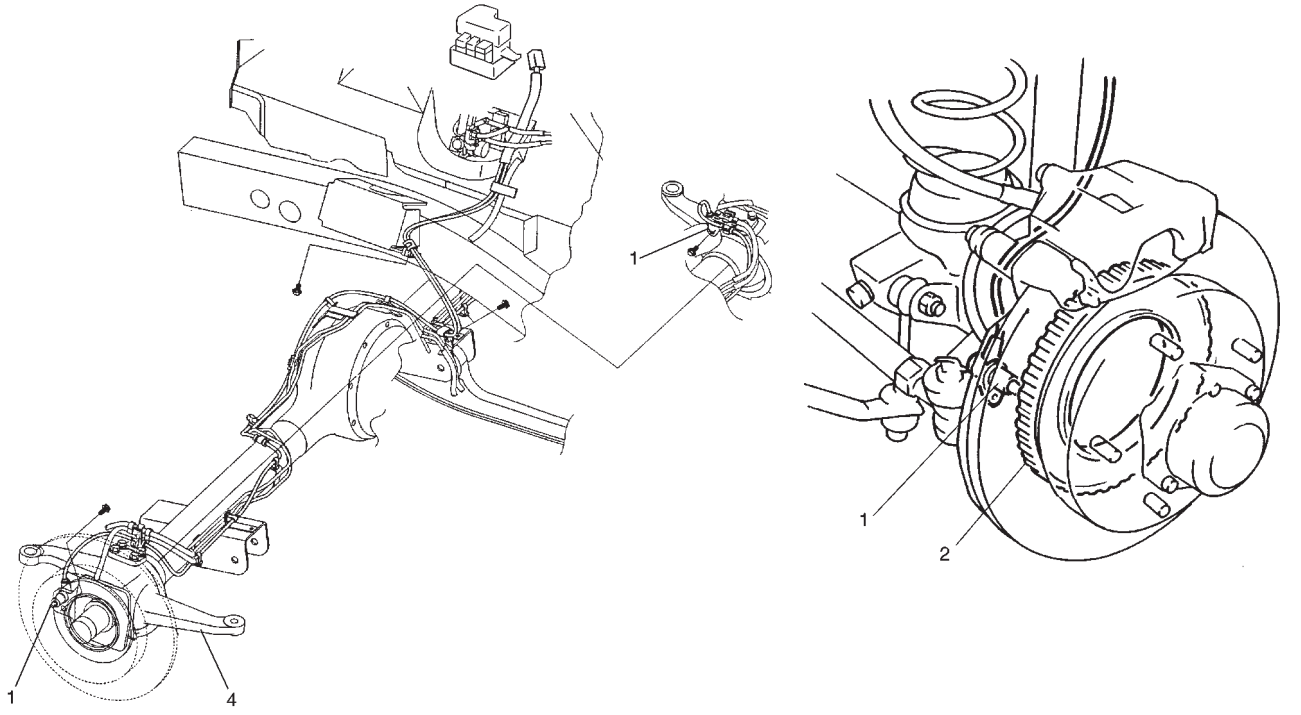

1. Front wheel speed sensor
2. Sensor ring
3. Left front strut
4. Knuckle

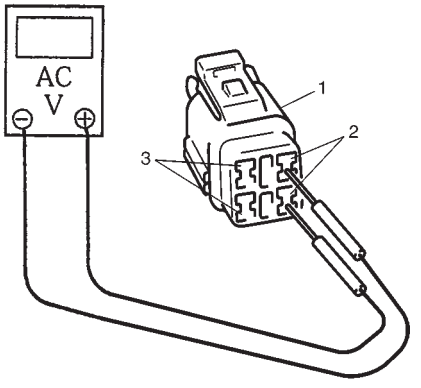

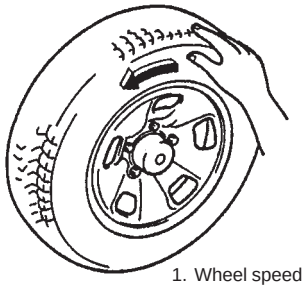

1. Wheel speed sensor coupler
2. For right wheel sensor terminals
3. For left wheel sensor terminals

OUTPUT VOLTAGE INSPECTION

1) Turn ignition switch OFF.
2) Hoist vehicle a little.
3) Disconnect connector of wheel speed sensor.
4) Connect voltmeter between connector terminals.
5) While turning wheel at a speed of approximately 1 full rotation to 1 1/3 rotation per second, check AC voltage of sensor.

Output AC voltage at 1 to
1 1/3 rotation per second (42 – 54 Hz): 120 mV or more

If measured voltage is not as specified, check sensor, rotor and their installation conditions.

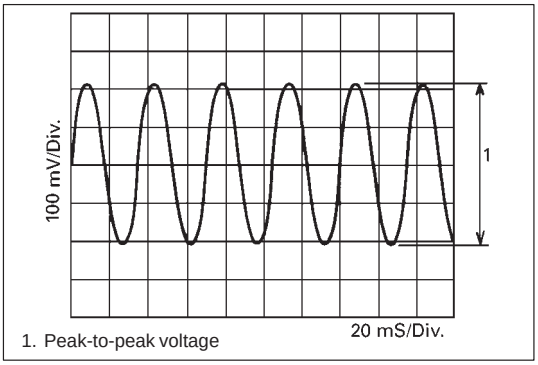

1. Peak-to-peak voltage

Reference

When using oscilloscope for this check, check if peak-to-peak voltage meets specification and waveform is complete.

Peak-to-peak voltage
at 1 to 1 1/3 rotation per second (42 – 54 Hz): 340 mV or more

REMOVAL

1) Disconnect negative cable at battery.

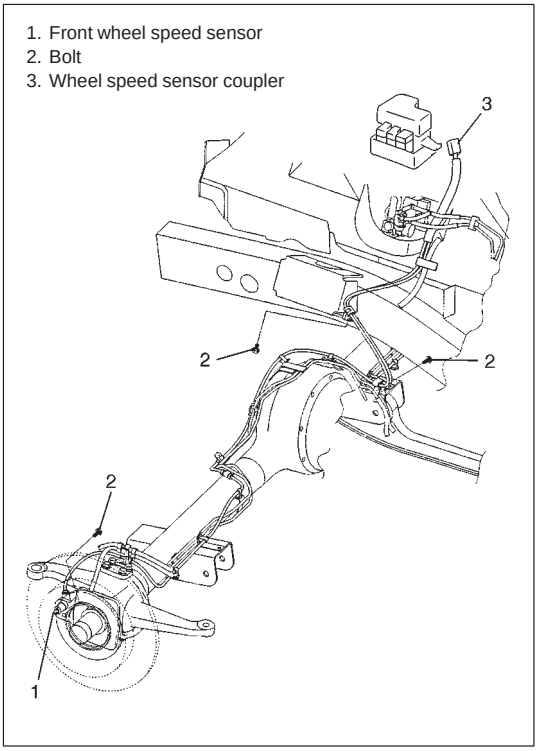

1. Front wheel speed sensor
2. Bolt
3. Wheel speed sensor coupler

2) Disconnect front wheel speed sensor coupler.
3) Hoist vehicle and remove wheel.
4) Remove harness clamp bolts and front wheel speed sensor from knuckle.

CAUTION:
- **Do not pull wire harness when removing front wheel speed sensor.**
- **Do not cause damage to surface of front wheel speed sensor and do not allow dust, etc. to enter its installation hole.**

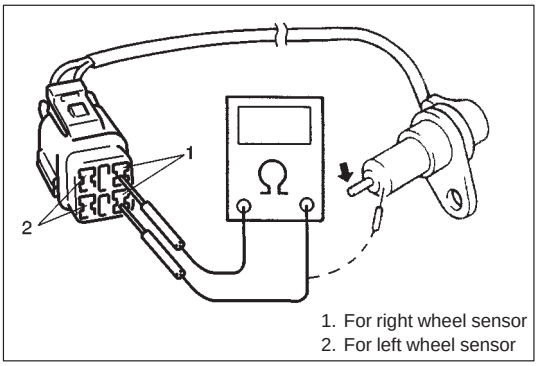

1. For right wheel sensor
2. For left wheel sensor

SENSOR INSPECTION

- Check sensor for damage.
- Check sensor for resistance.

Resistance between terminals: 1.2 – 1.6 kΩ at 20°C (68°F)
Resistance between terminal and sensor body: 1 MΩ or more

If any malfunction is found, replace.

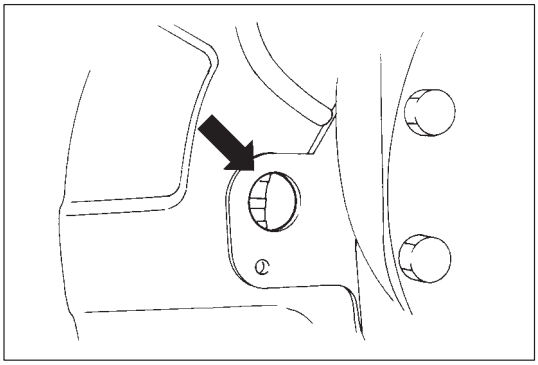

SENSOR ROTOR INSPECTION

- Check rotor serration (teeth) for being missing, damaged or deformed.
- Turn drive shaft and check if rotor rotation is free from eccentricity and looseness.
- Check that no foreign material is attached.
  If any faulty is found,repair or replace.

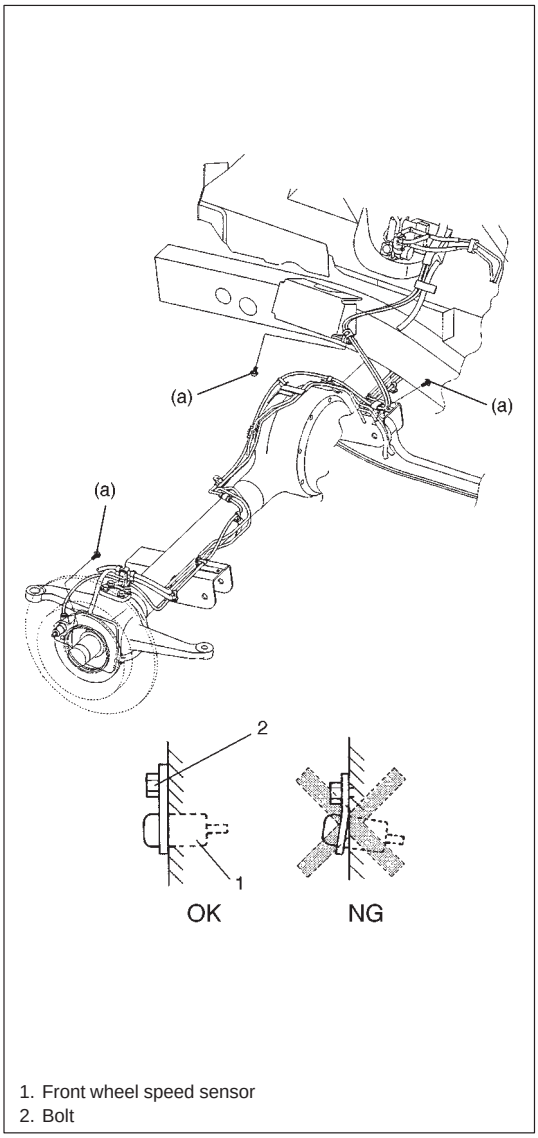

1. Front wheel speed sensor
2. Bolt

INSTALLATION

1) Check that no foreign material is attached to sensor and rotor.
2) Install it by reversing removal procedure.

Tightening Torque
(a): 10 N·m (1.0 kg-m, 7.2 lb-ft)

CAUTION:
Do not pull wire harness or twist more than necessary when installing front wheel speed sensor.

3) Check that there is no clearance between sensor and knuckle.

TIGHTENING TORQUE SPECIFICATIONS

Fastening parts	Tightening Torque		
	N·m	kg-m	lb-ft
Brake pipe flare nut (a)	16	1.6	11.6
ABS hydraulic unit/control module assembly bracket bolt (b)	11	1.1	8.0
ABS hydraulic unit/control module assembly bolt (c)	9	0.9	6.5
Front wheel speed sensor bolt (d)	10	1.0	7.2
Front wheel speed sensor harness clamp bolt (e)	10	1.0	7.2
Rear wheel speed sensor bolt (f)	10	1.0	7.2
Rear wheel speed sensor harness clamp bolt (g)	10	1.0	7.2

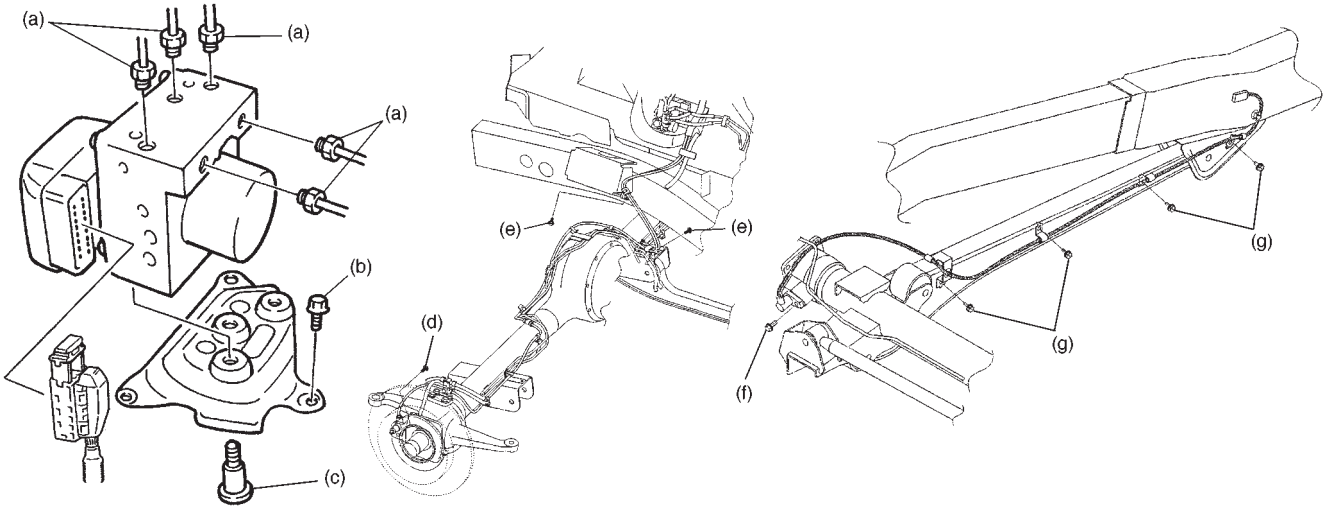

SPECIAL TOOLS

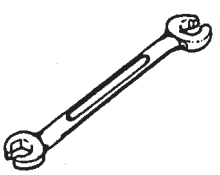

09950-78220
Flare nut wrench
(10 mm)

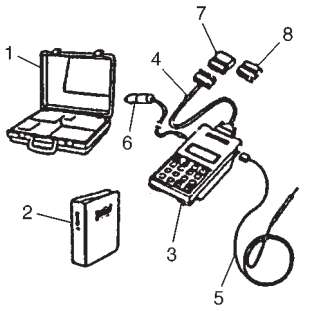

09931-76011
SUZUKI scan tool (Tech 1A) kit

1. Storage case
2. Operator's manual
3. Tech 1A
4. DLC cable
5. Test lead/probe
6. Power source cable
7. DLC cable adaptor
8. Self-test adaptor

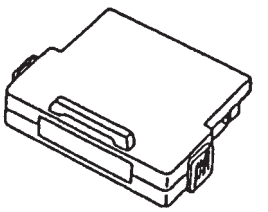

Mass storage cartridge

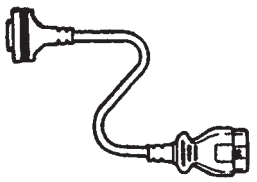

09931-76030
16/14 pin DLC cable

SECTION 6

ENGINE GENERAL INFORMATION AND DIAGNOSIS

WARNING:
For vehicles equipped with Supplemental Restraint (Air Bag) System:

- **Service on and around the air bag system components or wiring must be performed only by an authorized SUZUKI dealer. Refer to "Air Bag System Components and Wiring Location View" under "General Description" in air bag system section in order to confirm whether you are performing service on or near the air bag system components or wiring. Please observe all WARNINGS and "Service Precautions" under "On-Vehicle Service" in air bag system section before performing service on or around the air bag system components or wiring. Failure to follow WARNINGS could result in unintentional activation of the system or could render the system inoperative. Either of these two conditions may result in severe injury.**
- **Technical service work must be started at least 90 seconds after the ignition switch is turned to the "LOCK" position and the negative cable is disconnected from the battery. Otherwise, the system may be activated by reserve energy in the Sensing and Diagnostic Module (SDM).**

NOTE:
Whether the following systems (parts) are used in the particular vehicle or not depends on vehicle specifications. Be sure to bear this in mind when performing service work.

- **EGR valve**
- **Heated oxygen sensor(s) or CO adjusting resistor**
- **Three-way catalytic converter (TWC) and warm up three-way catalytic converter (WU-TWC)**

GENERAL INFORMATION AND ENGINE DIAGNOSIS 6-1
ENGINE MECHANICAL 6A1-1
ENGINE COOLING 6B-1
ENGINE FUEL 6C-1
ENGINE AND EMISSION CONTROL SYSTEM 6E-1
IGNITION SYSTEM 6F-1
CRANKING SYSTEM 6G-1
CHARGING SYSTEM 6H-1
EXHAUST SYSTEM 6K-1

CONTENTS

GENERAL INFORMATION 6- 3
Statement on Cleanliness and Code 6- 3
General Information on Engine Service 6- 3
Precaution on Fuel System Service 6- 4
Fuel Pressure Relief Procedure 6- 5
Fuel Leakage Check Procedure 6- 5
ENGINE DIAGNOSIS 6- 6
General Description 6- 6
On-Board Diagnostic System (Vehicle with immobilizer indicator lamp) 6- 6

On-Board Diagnostic System (Vehicle without immobilizer indicator lamp) 6- 9
Precaution in Diagnosing Trouble 6-10
Engine Diagnostic Flow Table 6-11
Customer Problem Inspection Form 6-13
Malfunction Indicator Lamp check 6-14
Diagnostic Trouble Code Check 6-14
Diagnostic Trouble Code Clearance 6-15
Diagnostic Trouble Code Table 6-16
Fail-safe Table 6-19
Visual Inspection 6-20
Engine Basic Inspection 6-21
Engine Diagnosis Table 6-23
Scan Tool Data 6-29
Scan Tool Data Definitions 6-31
Inspection of ECM and Its Circuits 6-33
Voltage Check 6-33
ECM Terminal Voltage Values Table 6-34
Resistance Check 6-40
Component Location 6-41
Table A-1 MIL Circuit Check (MIL does not come on) 6-42
Table A-2 MIL Circuit Check (MIL remains ON) 6-43
Table A-3 MIL Circuit Check (MIL flashes) 6-43
Table A-4 MIL Circuit Check (MIL does not flash) 6-43
Table A-5 ECM Power and Ground Circuit Check 6-44
DTC P0105 (No.11) MAP Circuit Malfunction 6-46
DTC P0110 (No.18) IAT Circuit Malfunction . . 6-49
DTC P0115 (No.19) ECT Circuit Malfunction . 6-51
DTC P0120 (No.13) Throttle Position Circuit Malfunction 6-53
DTC P0121 Throttle Position Circuit Range/ Performance Problem 6-55
DTC P0130 (No.14) HO2S Circuit Malfunction (Sensor-1) 6-57
DTC P0133 HO2S Circuit Slow Response (Sensor-1) 6-59
DTC P0135 (No.14) HO2S Heater Circuit Malfunction (Sensor-1) 6-60
DTC P0136 HO2S Circuit Malfunction (Sensor-2) 6-62
DTC P0141 HO2S Heater Circuit Malfunction (Sensor-2) 6-65
DTC P0171 Fuel System Too Lean 6-67
DTC P0172 Fuel System Too Rich 6-67
DTC P0300 Random Misfire Detected 6-71
DTC P0301 Cylinder 1 Misfire Detected 6-71
DTC P0302 Cylinder 2 Misfire Detected 6-71
DTC P0303 Cylinder 3 Misfire Detected 6-71
DTC P0304 Cylinder 4 Misfire Detected 6-71
DTC P0325 Knock Sensor Circuit Malfunction 6-75
DTC P0335 (No.23) CKP Sensor Circuit Malfunction 6-77
DTC P0340 (No.15) CMP Sensor Circuit Malfunction 6-80
DTC P0400 EGR Flow Malfunction 6-83
DTC P0420 Catalyst System Efficiency Below Threshold 6-86
DTC P0443 Purge Control Valve Circuit Malfunction 6-89
DTC P0481 A/C Condenser Fan Control Circuit Malfunction 6-90
DTC P0500 (NO.16) Vehicle Speed Sensor Malfunction 6-92
DTC P0505 Idle Control System Malfunction 6-94
DTC P0601 (No.71) Internal Control Module Memory Check Sum Error 6-96
DTC P1450 Barometric Pressure Sensor Low/High Input 6-97
DTC P1451 Barometric Pressure Sensor Performance Problem 6-97
DTC P1500 Engine Starter Signal Circuit Malfunction 6-99
DTC P1510 ECM Back-up Power Supply Malfunction 6-100
DTC P1570 (No.21) ABS Signal Circuit Malfunction 6-101
DTC P1600 Serial Communication Problem Between ECM and TCM 6-102
DTC P1717 A/T Drive Range (Park/Neutral Position) Signal Circuit Malfunction 6-104
Table B-1 Fuel Injector Circuit Check 6-106
Table B-2 Fuel Pump and Its Circuit Check . 6-107
Table B-3 Fuel Pressure Check 6-109
Table B-4 Idle Air Control System Check . . . 6-111
Table B-5 A/C Signal Circuits Check 6-114
Table B-6 Electric Load Signal Circuit Check 6-116
Table B-7 A/C Condenser Fan Control System Check 6-117

SPECIAL TOOLS 6-119

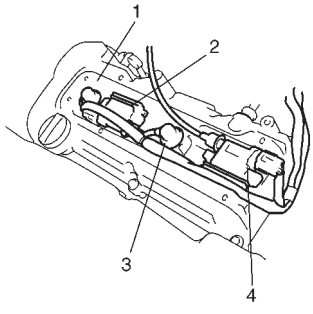

GENERAL INFORMATION

STATEMENT ON CLEANLINESS AND CARE

An automobile engine is a combination of many machined, honed, polished and lapped surfaces with tolerances that are measured in the thousands of an millimeter (ten thousands of an inch).
Accordingly, when any internal engine parts are serviced, care and cleanliness are important.
Throughout this section, it should be understood that proper cleaning and protection of machined surfaces and friction areas is part of the repair procedure. This is considered standard shop practice even if not specifically stated.

- A liberal coating of engine oil should be applied to friction areas during assembly to protect and lubricate the surfaces on initial operation.
- Whenever valve train components, pistons, piston rings, connecting rods, rod bearings, and crankshaft journal bearings are removed for service, they should be retained in order.
  At the time of installation, they should be installed in the same locations and with the same mating surfaces as when removed.
- Battery cables should be disconnected before any major work is performed on the engine.
  Failure to disconnect cables may result in damage to wire harness or other electrical parts.
- Throughout this manual, the four cylinders of the engine are identified by numbers; No.1 (1), No.2 (2), No.3 (3) and No.4 (4) counted from crankshaft pulley side to flywheel side.

GENERAL INFORMATION ON ENGINE SERVICE

THE FOLLOWING INFORMATION ON ENGINE SERVICE SHOULD BE NOTED CAREFULLY, AS IT IS IMPORTANT IN PREVENTING DAMAGE, AND IN CONTRIBUTING TO RELIABLE ENGINE PERFORMANCE.

- When raising or supporting engine for any reason, do not use a jack under oil pan. Due to small clearance between oil pan and oil pump strainer, jacking against oil pan may cause it to be bent against strainer resulting in damaged oil pick-up unit.
- It should be kept in mind, while working on engine, that 12-volt electrical system is capable of violent and damaging short circuits.
  When performing any work where electrical terminals can be grounded, ground cable of the battery should be disconnected at battery.
- Any time the air cleaner, throttle body or intake manifold is removed, the intake opening should be covered. This will protect against accidental entrance of foreign material which could follow intake passage into cylinder and cause extensive damage when engine is started.

HOSE CONNECTION

With short pipe, fit hose as far as it reaches pipe joint as shown.

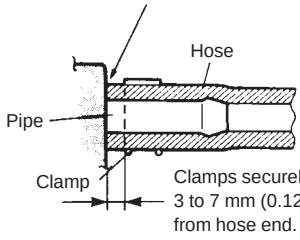

With following type pipe, fit hose as far as its peripheral projection as shown.

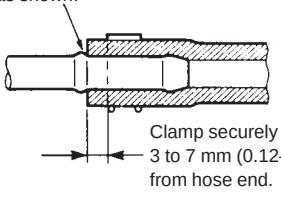

With bent pipe, fit hose as its bent part as shown or till pipe is about 20 to 30 mm (0.79–1.18 in.) into the hose.

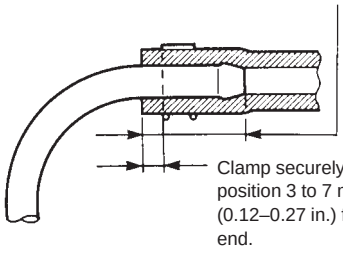

With straight pipe, fit hose till pipe is, about 20 to 30 mm (0.79–1.18 in.) into the hose.

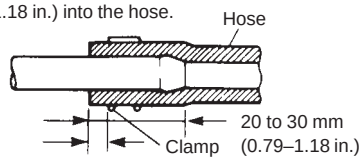

Clamp securely at a position 3 to 7mm (0.12–0.27 in.) from hose end.

PRECAUTION ON FUEL SYSTEM SERVICE

- Work must be done with no smoking, in a well-ventilated area and away from any open flames.
- As fuel feed line (between fuel pump and fuel delivery pipe) is still under high fuel pressure even after engine was stopped, loosening or disconnecting fuel feed line directly may cause dangerous spout of fuel to occur where loosened or disconnected.
  Before loosening or disconnecting fuel feed line, make sure to release fuel pressure according to “FUEL PRESSURE RELIEF PROCEDURE”. A small amount of fuel may be released after the fuel line is disconnected. In order to reduce the chance of personal injury, cover the fitting to be disconnected with a shop cloth. Put that cloth in an approved container when disconnection is completed.
- Never run engine with fuel pump relay disconnected when engine and exhaust system are hot.
- Fuel or fuel vapor hose connection varies with each type of pipe. When reconnecting fuel or fuel vapor hose, be sure to connect and clamp each hose correctly referring to left figure Hose Connection.
  After connecting, make sure that it has no twist or kink.
- When installing injector or fuel delivery pipe, lubricate its O-ring with spindle oil or gasoline.
- When connecting fuel pipe flare nut, first tighten flare nut by hand and then tighten it to specified torque.

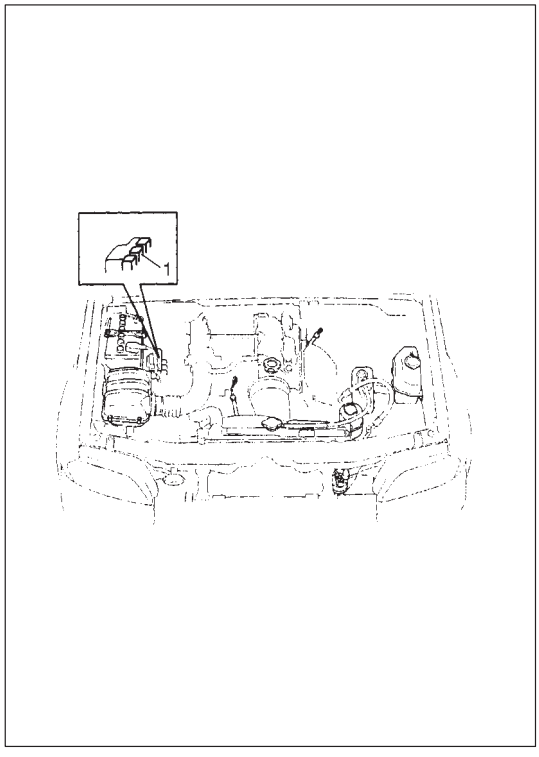

FUEL PRESSURE RELIEF PROCEDURE

CAUTION:
This work must not be done when engine is hot. If done so, it may cause adverse effect to catalyst.

After making sure that engine is cold, release fuel pressure as follows.

1) Place transmission gear shift lever in "Neutral" (Shift selector lever to "P" range for A/T model), set parking brake, and block drive wheels.
2) Remove relay box cover.
3) Disconnect fuel pump relay (1) from its connector.
4) Remove fuel filler cap to release fuel vapor pressure in fuel tank and then reinstall it.
5) Start engine and run it till it stops for lack of fuel. Repeat cranking engine 2-3 times for about 3 seconds each time to dissipate fuel pressure in lines. Fuel connections are now safe for servicing.
6) Upon completion of servicing, connect fuel pump relay (1) to its connector.

FUEL LEAKAGE CHECK PROCEDURE

After performing any service on fuel system, check to make sure that there are no fuel leakages as follows.

1) Turn ON ignition switch for 3 seconds (to operate fuel pump) and then turn it OFF.
   Repeat this (ON and OFF) 3 or 4 times and apply fuel pressure to fuel line. (till fuel pressure is felt by hand placed on fuel feed hose.)
2) In this state, check to see that there are no fuel leakages from any part of fuel system.

ENGINE DIAGNOSIS

GENERAL DESCRIPTION

This vehicle is equipped with an engine and emission control system which are under control of ECM.
The engine and emission control system in this vehicle are controlled by ECM. ECM has an On-Board Diagnostic system which detects a malfunction in this system and abnormality of those parts that influence the engine exhaust emission. When diagnosing engine troubles, be sure to have full understanding of the outline of “On-Board Diagnostic System” and each item in “Precaution in Diagnosing Trouble” and execute diagnosis according to “ENGINE DIAGNOSTIC FLOW TABLE”.
There is a close relationship between the engine mechanical, engine cooling system, ignition system, exhaust system, etc. and the engine and emission control system in their structure and operation. In case of an engine trouble, even when the malfunction indicator lamp (MIL) doesn’t turn ON, it should be diagnosed according to this flow table.

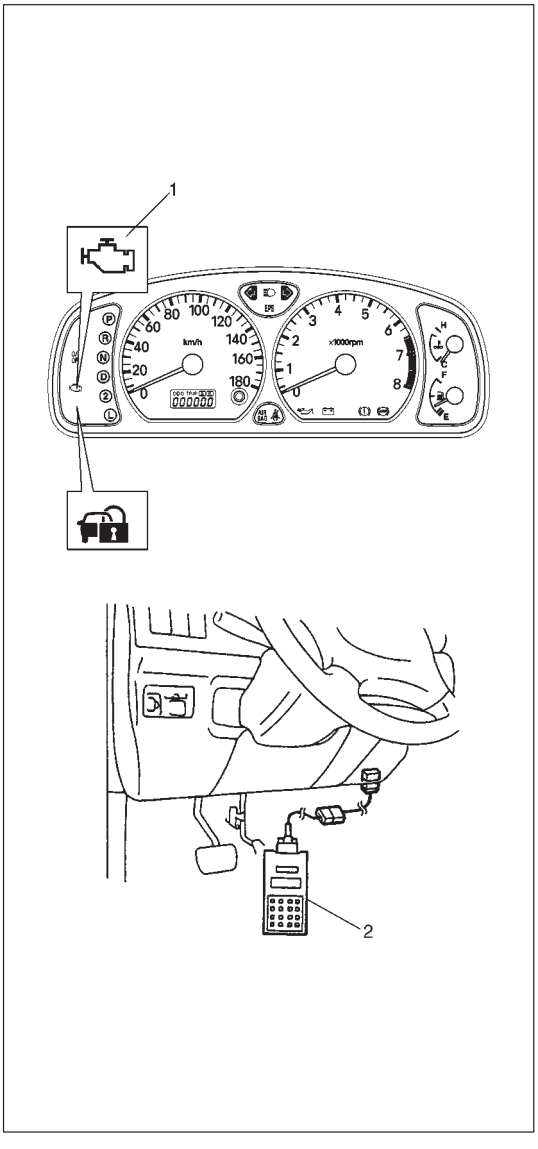

ON-BOARD DIAGNOSTIC SYSTEM (VEHICLE WITH IMMOBILIZER INDICATOR LAMP)

ECM in this vehicle has following functions.

- When the ignition switch is turned ON with the engine at a stop, malfunction indicator lamp (MIL) (1) turns ON to check the bulb of the malfunction indicator lamp (1).
- When ECM detects a malfunction which gives an adverse effect to vehicle emission while the engine is running, it makes the malfunction indicator lamp (1) in the meter cluster of the instrument panel turn ON or flash (flashing only when detecting a misfire which can cause damage to the catalyst) and stores the malfunction area in its memory.
  (If it detects that continuously 3 driving cycles are normal after detecting a malfunction, however, it makes MIL (1) turn OFF although DTC stored in its memory will remain.)
- As a condition for detecting a malfunction in some areas in the system being monitored by ECM and turning ON the malfunction indicator lamp (1) due to that malfunction, 2 driving cycle detection logic is adopted to prevent erroneous detection.
- When a malfunction is detected, engine and driving conditions then are stored in ECM memory as freeze frame data. (For the details, refer to description on Freeze frame data.)
- It is possible to communicate by using not only SUZUKI scan tool (Tech-1) (2) but also generic scan tool. (Diagnostic information can be accessed by using a scan tool.)

Warm-up Cycle
A warm-up cycle means sufficient vehicle operation such that the coolant temperature has risen by at least 22°C (40°F) from engine starting and reaches a minimum temperature of 70°C (160°F).

Driving Cycle
A “Driving Cycle” consists of engine startup and engine shutoff.

2 Driving Cycles Detection Logic
The malfunction detected in the first driving cycle is stored in ECM memory (in the form of pending DTC and freeze frame data) but the malfunction indicator lamp does not light at this time. It lights up at the second detection of same malfunction also in the next driving cycle.

Pending DTC
Pending DTC means a DTC detected and stored temporarily at 1 driving cycle of the DTC which is detected in the 2 driving cycle detection logic.

Freeze Frame Data
ECM stores the engine and driving conditions (in the from of data as shown at the left) at the moment of the detection of a malfunction in its memory. This data is called “Freeze frame data”.
Therefore, it is possible to know engine and driving conditions (e.g., whether the engine was warm or not, where the vehicle was running or stopped, where air/fuel mixture was lean or rich) when a malfunction was detected by checking the freeze frame data. Also, ECM has a function to store each freeze frame data for three different malfunctions in the order as the malfunction is detected. Utilizing this function, it is possible to know the order of malfunctions that have been detected. Its use is helpful when rechecking or diagnosing a trouble.

An Example of Freeze Frame Data

1.	Trouble Code	P0102 (1st)
2.	Engine Speed	782 RPM
3.	Eng Cool Tmp.	80°C
4.	Vehicle Spd.	0 km/h
5.	MAP Sensor	39 kPa
6.	St. Term FT1	– 0.8% Lean
7.	Lg. Term FT1	– 1.6% Lean
8.	Fuel 1 Stat.	Closed Loop
9.	Fuel 2 Stat.	Not used
10.	Load value	25.5%

1st, 2nd or 3rd in parentheses here represents which position in the order the malfunction is detected.

Priority of freeze frame data:
ECM has 4 frames where the freeze frame data can be stored. The first frame stores the freeze frame data of the malfunction which was detected first. However, the freeze frame data stored in this frame is updated according to the priority described below. (If malfunction as described in the upper square “1” below is detected while the freeze frame data in the lower square “2” has been stored, the freeze frame data “2” will be updated by the freeze frame data “1”.)

PRIORITY	FREEZE FRAME DATA IN FRAME 1
1	Freeze frame data at initial detection of malfunction among misfire detected (P0300-P0304), fuel system too lean (P0171) and fuel system too rich (P0172)
2	Freeze frame data when a malfunction other than those in “1” above is detected

In the 2nd through the 4th frames, the freeze frame data of each malfunction is stored in the order as the malfunction is detected. These data are not updated.
Shown in the table below are examples of how freeze frame data are stored when two or more malfunctions are detected.

FRAME / MALFUNCTION DETECTED ORDER		FRAME 1	FRAME 2	FRAME 3	FRAME 4
		FREEZE FRAME DATA to be updated	1st FREEZE FRAME DATA	2nd FREEZE FRAME DATA	3rd FREEZE FRAME DATA
	No malfunction	No freeze frame data			
1	P0400 (EGR) detected	Data at P0400 detection	Data at P0400 detection	–	–
2	P0171 (Fuel system) detected	Data at P0171 detection	Data at P0400 detection	Data at P0171 detection	–
3	P0300 (Misfire) detected	Data at P0171 detection	Data at P0400 detection	Data at P0171 detection	Data at P0300 detection
4	P0301 (Misfire) detected	Data at P0171 detection	Data at P0400 detection	Data at P0171 detection	Data at P0300 detection

Freeze frame data clearance:
The freeze frame data is cleared at the same time as clearance of diagnostic trouble code (DTC).

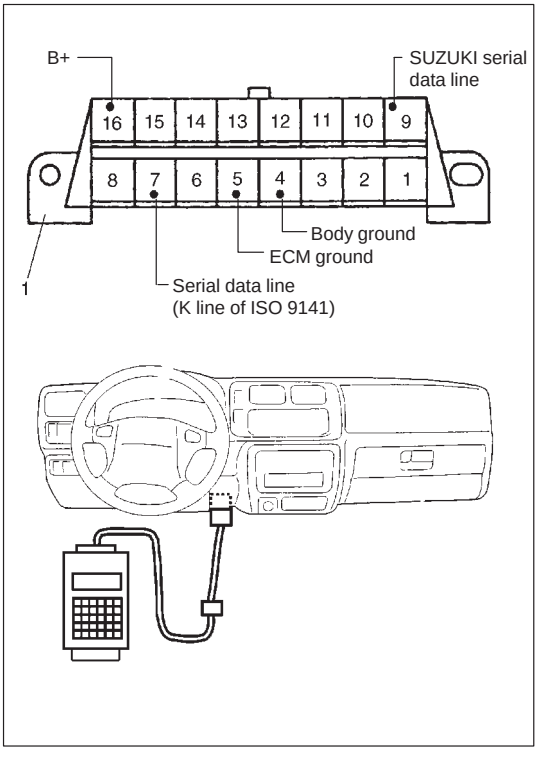

Data Link Connector (DLC)
DLC (1) is in compliance with SAEJ1962 in its installation position, the shape of connector and pin assignment.
Serial data line (K line of ISO 9141) is used for SUZUKI scan tool (Tech-1) or generic scan tool to communicate with ECM, TCM, Air Bag SDM and ABS control module.
SUZUKI serial data line is used for SUZUKI scan tool to communicate with immobilizer control module.

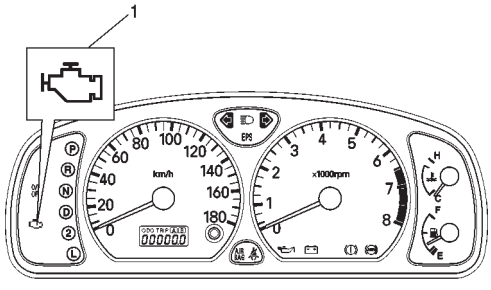

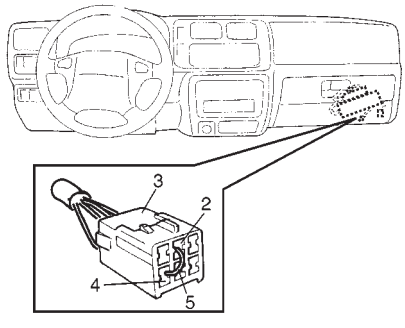

ON-BOARD DIAGNOSTIC SYSTEM (VEHICLE WITHOUT IMMOBILIZER INDICATOR LAMP)

ECM diagnosis troubles which may occur in the area including the following parts when the ignition switch is ON and the engine is running, and indicates the result by turning on or flashing malfunction indicator lamp (1).

- Heated oxygen sensor (if equipped)
- ECT sensor
- TP sensor
- IAT sensor
- MAP sensor
- CMP sensor
- CKP sensor
- Knock sensor
- VSS
- CPU (Central Processing Unit) of ECM

ECM and malfunction indicator lamp (1) operate as follows.

- Malfunction indicator lamp (1) lights when the ignition switch is turned ON (but the engine at stop) with the diagnosis switch terminal ungrounded regardless of the condition of Engine and Emission Control system. This is only to check the malfunction indicator lamp (1) bulb and its circuit.
- If the above areas of Engine and Emission Control system is free from any trouble after the engine start (while engine is running), malfunction indicator lamp (1) turns OFF.
- When ECM detects a trouble which has occurred in the above areas, it makes malfunction indicator lamp (1) turn ON while the engine is running to warn the driver of such occurrence of trouble and at the same time it stores the trouble area in ECM back-up memory. (The memory is kept as it is even if the trouble was only temporary and disappeared immediately. And it is not erased unless the power to ECM is shut off for specified time below.)
  ECM also indicates trouble area in memory by means of flashing of malfunction indicator lamp (1) at the time of inspection. (i.e. when connecting diagnosis switch terminal (2) and ground terminal (4) of monitor connector (3) with a service wire (5) and ignition switch is turned ON.)

NOTE:

- **When a trouble occurs in the above areas and disappears soon while the diagnosis switch terminal is ungrounded and the engine is running, malfunction indicator lamp (1) lights and remains ON as long as the trouble exists but it turns OFF when the normal condition is restored.**
- **Time required to erase diagnostic trouble code memory thoroughly varies depending on ambient temperature as follows.**

AMBIENT TEMPERATURE	TIME TO CUT POWER TO ECM
Over 0°C (32°F)	60 sec. or longer
Under 0°C (32°F)	Not specifiable. Select a place with higher than 0°C (32°F) temperature.

PRECAUTION IN DIAGNOSING TROUBLE

- Don't disconnect couplers from ECM, battery cable at battery, ECM ground wire harness from engine or main fuse before confirming diagnostic information (DTC, freeze frame data, etc.) stored in ECM memory. Such disconnection will erase memorized information in ECM memory.
- Diagnostic information stored in ECM memory can be cleared as well as checked by using SUZUKI scan tool (Tech-1) or generic scan tool. Before using scan tool, read its Operator's (Instruction) Manual carefully to have good understanding as to what functions are available and how to use it.
- Priorities for diagnosing troubles (Vehicle with Immobilizer indicator lamp).

  If multiple diagnostic trouble codes (DTCs) are stored, proceed to the flow table of the DTC which has detected earliest in the order and follow the instruction in that table.

  If no instructions are given, troubleshoot diagnostic trouble codes according to the following priorities.

  1. Diagnostic trouble codes (DTCs) other than DTC P0171/P0172 (Fuel system too lean/too rich), DTC P0300/P0301/P0302/P0303/P0304 (Misfire detected) and DTC P0400 (EGR flow malfunction)
  2. DTC P0171/P0172 (Fuel system too lean/too rich) and DTC P0400 (EGR flow malfunction)
  3. DTC P0300/P0301/P0302/P0303/P0304 (Misfire detected)
- Be sure to read "Precautions for Electrical Circuit Service" in Section 0A before inspection and observe what is written there.
- ECM Replacement

  When substituting a known-good ECM, check for following conditions. Neglecting this check may cause damage to a known-good ECM.

  – Resistance value of all relays, actuators is as specified respectively.
  – MAP sensor and TP sensor are in good condition and none of power circuits of these sensors is shorted to ground.

ENGINE DIAGNOSTIC FLOW TABLE

Refer to the following pages for the details of each step.

STEP	ACTION	YES	NO
1	Customer Complaint Analysis 1) Perform customer complaint analysis referring to the next page. Was customer complaint analysis performed?	Go to Step 2.	Perform customer complaint analysis.
2	Diagnostic Trouble Code (DTC) and Freeze Frame Data Check, Record and Clearance 1) Check for DTC (including pending DTC) referring to the next page. Is there any DTC(s)?	1) Print DTC and freeze frame data or write them down and clear them by referring to "DTC Clearance" section. 2) Go to Step 3.	Go to Step 4.
3	Visual Inspection 1) Perform visual inspection referring to the next page. Is there any faulty condition?	1) Repair or replace malfunction part. 2) Go to Step 11.	Go to Step 5.
4	Visual Inspection 1) Perform visual inspection referring to the next page. Is there any faulty condition?		Go to Step 8.
5	Trouble Symptom Confirmation 1) Confirm trouble symptom referring to the next page. Is trouble symptom identified?	Go to Step 6.	Go to Step 7.
6	Rechecking and Record of DTC/Freeze Frame Data 1) Recheck for DTC and freeze frame data referring to "DTC Check" section. Is there any DTC(s)?	Go to Step 9.	Go to Step 8.
7	Rechecking and Record of DTC/Freeze Frame Data 1) Recheck for DTC and freeze frame data referring to "DTC Check" section. Is there any DTC(s)?		Go to Step 10.
8	Engine Basic Inspection and Engine Diagnosis Table 1) Check and repair according to "Engine Basic Check" and "Engine Diagnosis Table" section. Are check and repair complete?	Go to Step 11.	1) Check and repair malfunction part(s). 2) Go to Step 11.
9	Trouble shooting for DTC 1) Check and repair according to applicable DTC diag. flow table. Are check and repair complete?		
10	Check for Intermittent Problems 1) Check for intermittent problems referring to the next page. Is there any faulty condition?	1) Repair or replace malfunction part(s). 2) Go to Step 11.	Go to Step 11.
11	Final Confirmation Test 1) Clear DTC if any. 2) Perform final confirmation test referring to the next page. Is there any problem symptom, DTC or abnormal condition?	Go to Step 6.	End.

1. CUSTOMER COMPLAINT ANALYSIS

Record details of the problem (failure, complaint) and how it occurred as described by the customer. For this purpose, use of such an inspection form will facilitate collecting information to the point required for proper analysis and diagnosis.

2. DIAGNOSTIC TROUBLE CODE (DTC)/FREEZE FRAME DATA CHECK, RECORD AND CLEARANCE

First, check DTC (including pending DTC), referring to "DTC check" section. If DTC is indicated, print it and freeze frame data or write them down and then clear them by referring to "DTC clearance" section. DTC indicates malfunction that occurred in the system but does not indicate whether it exists now or it occurred in the past and the normal condition has been restored now. To check which case applies, check the symptom in question according to Step 4 and recheck DTC according to Step 5.

Attempt to diagnose a trouble based on DTC in this step only or failure to clear the DTC in this step will lead to incorrect diagnosis, trouble diagnosis of a normal circuit or difficulty in troubleshooting.

NOTE:

- **If only Automatic transmission DTCs (P0702-P1717) or Immobilizer DTCs (P1620-P1623) are indicated in this step, perform trouble diagnosis according to "Diagnosis" in Section 7B or Section 8G.**

3. and 4. VISUAL INSPECTION

As a preliminary step, be sure to perform visual check of the items that support proper function of the engine referring to "Visual Inspection" section.

5. TROUBLE SYMPTOM CONFIRMATION

Based on information obtained in Step 1 Customer complaint analysis and Step 2 DTC/freeze frame data check, confirm trouble symptoms. Also, reconfirm DTC according to "DTC Confirmation Procedure" described in each DTC Diagnosis section.

6. and 7. RECHECKING AND RECORD OF DTC/FREEZE FRAME DATA

Refer to "DTC check" section for checking procedure.

8. ENGINE BASIC INSPECTION AND ENGINE DIAGNOSIS TABLE

Perform basic engine check according to the "Engine Basic Inspection Flow Table" first. When the end of the flow table has been reached, check the parts of the system suspected as a possible cause referring to ENGINE DIAGNOSIS TABLE and based on symptoms appearing on the vehicle (symptoms obtained through steps of customer complaint analysis, trouble symptom confirmation and/or basic engine check) and repair or replace faulty parts, if any.

9. TROUBLESHOOTING FOR DTC (See each DTC Diag. Flow Table)

Based on the DTC indicated in Step 5 and referring to the applicable DTC diag. flow table in this section, locate the cause of the trouble, namely in a sensor, switch, wire harness, connector, actuator, ECM or other part and repair or replace faulty parts.

10. CHECK FOR INTERMITTENT PROBLEM

Check parts where an intermittent trouble is easy to occur (e.g., wire harness, connector, etc.), referring to "INTERMITTENT AND POOR CONNECTION" in Section 0A and related circuit of DTC recorded in Step 2.

11. FINAL CONFIRMATION TEST

Confirm that the problem symptom has gone and the engine is free from any abnormal conditions. If what has been repaired is related to the DTC, clear the DTC once, perform DTC confirmation procedure and confirm that no DTC is indicated.

CUSTOMER PROBLEM INSPECTION FORM (EXAMPLE)

User name:	Model:	VIN:	
Date of issue:	Date Reg.	Date of problem:	Mileage:

PROBLEM SYMPTOMS	
☐ **Difficult Starting** ☐ No cranking ☐ No initial combustion ☐ No combustion ☐ Poor starting at (☐cold ☐warm ☐always) ☐ Other_____	☐ **Poor Driveability** ☐ Hesitation on acceleration ☐ Back fire/☐After fire ☐ Lack of power ☐ Surging ☐ abnormal knocking ☐ Other_____
☐ **Poor Idling** ☐ Poor fast idle ☐ Abnormal idling speed (☐High ☐Low) (r/min.) ☐ Unstable ☐ Hunting (r/min. to r/min.) ☐ Other_____	☐ **Engine Stall when** ☐ Immediately after start ☐ Accel. pedal is depressed ☐ Accel. pedal is released ☐ Load is applied ☐ A/C ☐Electric load ☐P/S ☐ Other_____ ☐ Other_____
☐ OTHERS:	

VEHICLE/ENVIRONMENTAL CONDITION WHEN PROBLEM OCCURS	
Environmental Condition	
Weather Temperature Frequency Road	☐Fair ☐Cloudy ☐Rain ☐Snow ☐Always ☐Other_____ ☐Hot ☐Warm ☐Cool ☐Cold (°F/ °C) ☐Always ☐Always ☐Sometimes (times/ day, month) ☐Only once ☐Under certain condition ☐Urban ☐Suburb ☐Highway ☐Mountainous (☐Uphill ☐Downhill) ☐Tarmacadam ☐Gravel ☐Other_____
Vehicle Condition	
Engine condition	☐Cold ☐Warming up phase ☐Warmed up ☐Always ☐Other at starting ☐Immediately after start ☐Racing without load ☐Engine speed (r/min)
Vehicle condition	During driving: ☐Constant speed ☐Accelerating ☐Decelerating ☐Right hand corner ☐Left hand corner ☐When shifting (Lever position) ☐At stop ☐Vehicle speed when problem occurs (km/h, Mile/h) ☐Other_____

Malfunction indicator lamp condition	☐Always ON ☐Sometimes ON ☐Always OFF ☐Good condition	
Diagnostic trouble code	First check: ☐No code ☐Malfunction code ( )	
	Second check: ☐No code ☐Malfunction code ( )	

NOTE:

The above form is a standard sample. It should be modified according to conditions characteristic of each market.

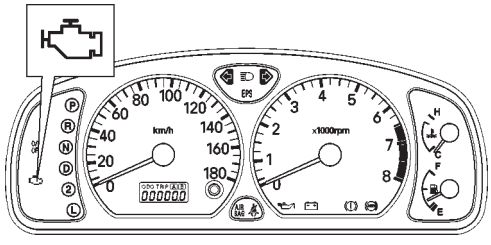

MALFUNCTION INDICATOR LAMP (MIL) CHECK

1) Turn ON ignition switch (but the engine at stop) and check that MIL lights.
   If MIL does not light up (or MIL dims), go to “Diagnostic Flow Table A-1” for troubleshooting.
   If MIL flushes, go to “Diagnostic Flow Table A-3” for trouble shooting (vehicle without immobilizer indicator lamp).
2) Start engine and check that MIL turns OFF.
   If MIL remains ON and no DTC is stored in ECM, go to “Diagnostic Flow Table A-2” for troubleshooting.

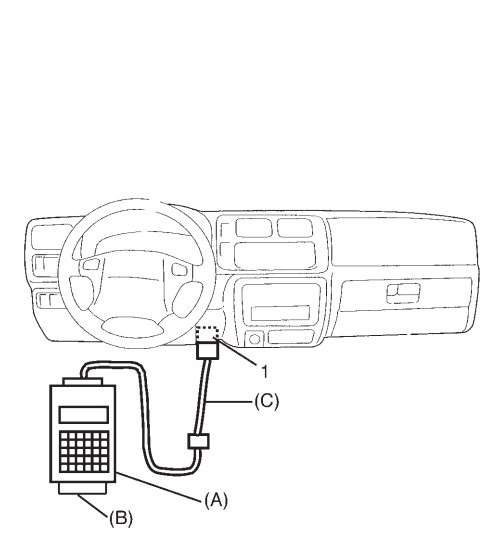

DIAGNOSTIC TROUBLE CODE (DTC) CHECK

[Using SUZUKI scan tool]

1) Prepare SUZUKI scan tool (Tech-1).
2) With ignition switch OFF, connect it to data link connector (DLC) (1) located on underside of instrument panel at driver’s seat side.
   Special Tool:
   (A): SUZUKI scan tool
   (B): Mass storage cartridge
   (C): 16/14 pin DLC cable
3) Turn ignition switch ON and confirm that MIL lights.
4) Read DTC, pending DTC and freeze frame data according to instructions displayed on scan tool and print it or write it down. Refer to scan tool operator’s manual for further details.
   If communication between scan tool and ECM is not possible, check if scan tool is communicable by connecting it to ECM in another vehicle. If communication is possible in this case, scan tool is in good condition. Then check data link connector and serial data line (circuit) in the vehicle with which communication was not possible.
5) After completing the check, turn ignition switch off and disconnect scan tool from data link connector.

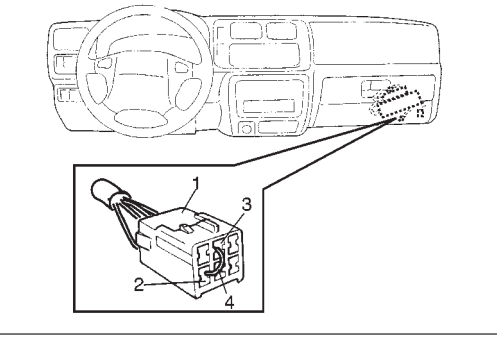

[Without using SUZUKI scan tool] (Vehicle without Immobilizer indicator lamp)

1) Check malfunction indicator lamp referring to “Malfunction Indicator Lamp Check” in this section.
2) With the ignition switch OFF position, connect diagnosis switch terminal (3) and ground terminal (2) in monitor connector (1) with service wire (4).
3) With the ignition switch ON position and leaving engine OFF, read DTC from flashing pattern of malfunction indicator lamp. Refer to “Diagnostic Trouble Code Table”.
   If lamp does not flash or remains ON or OFF, go to “Diagnostic Flow Table A-4”.

NOTE:

- **If abnormality or malfunction lies in two or more areas, malfunction indicator lamp indicates applicable codes three times each.**
  And flashing of these codes is repeated as long as diagnosis terminal is grounded and ignition switch is held at ON position.
- **Take a note of diagnostic trouble code indicated first.**

4) After completing the check, turn the ignition switch OFF position and disconnect service wire from monitor coupler.

DIAGNOSTIC TROUBLE CODE (DTC) CLEARANCE

[Using SUZUKI scan tool]

1) Connect SUZUKI scan tool (Tech-1) to data link connector in the same manner as when making this connection for DTC check.
2) Turn ignition switch ON.
3) Erase DTC and pending DTC according to instructions displayed on scan tool. Refer to scan tool operator's manual for further details.
4) After completing the clearance, turn ignition switch off and disconnect scan tool from data link connector.

NOTE:

DTC and freeze frame data stored in ECM memory are also cleared in following cases. Be careful not to clear them before keeping their record.

- **When power to ECM is cut off (by disconnecting battery cable, removing fuse or disconnecting ECM connectors)**
- **When the same malfunction (DTC) is not detected again during 40 engine warm-up cycles.**

[Without using SUZUKI scan tool]

1) Turn the ignition switch OFF position.
2) Disconnect battery negative cable for specified time below to erase diagnostic trouble code stored in ECM memory and reconnect it.

Time required to erase DTC:

Ambient temperature	Time to cut power to ECM
Over 0°C (32°F)	30 sec. or longer
Under 0°C (32°F)	Not specifiable. Select a place with higher than 0°C (32°F) temperature.

DIAGNOSTIC TROUBLE CODE (DTC) TABLE

DTC NO.	DETECTING ITEM	DETECTING CONDITION (DTC will set when detecting:)	MIL (vehicle with immobilizer indicator lamp)	MIL (vehicle without immobilizer indicator lamp)
P0105 (No.11)	Manifold absolute pressure circuit malfunction	Low pressure-high vacuum-low voltage (or MAP sensor circuit shorted to ground) High pressure-low vacuum-high voltage (or MAP sensor circuit open)	1 driving cycle	1 driving cycle
P0110 (No.18)	Intake air temp. circuit malfunction	Intake air temp. circuit low input Intake air temp. circuit high input	1 driving cycle	1 driving cycle
P0115 (No.19)	Engine coolant temp. circuit malfunction	Engine coolant temp. circuit low input Engine coolant temp. circuit high input	1 driving cycle	1 driving cycle
P0120 (No.13)	Throttle position circuit malfunction	Throttle position circuit low input Throttle position circuit high input	1 driving cycle	1 driving cycle
P0121	Throttle position circuit performance problem	Poor performance of TP sensor	2 driving cycles	Not applicable
P0130 (No.14)	HO2S circuit malfunction (Sensor-1)	Min. output voltage of HO2S-higher than specification Max. output voltage of HO2S-lower than specification	2 driving cycles	1 driving cycle
P0133	HO2S circuit slow response (Sensor-1)	Response time of HO2S-1 output voltage between rich and lean is longer than specification.	2 driving cycles	Not applicable
P0135 (No.14)	HO2S heater circuit malfunction (Sensor-1)	Terminal voltage is lower than specification at heater OFF or it is higher at heater ON.	2 driving cycles	1 driving cycle
P0136	HO2S circuit malfunction (Sensor-2)	HO2S-2 voltage is higher than specification	2 driving cycles	Not applicable
P0141	HO2S heater circuit malfunction (Sensor-2)	Terminal voltage is lower than specification at heater OFF or it is higher at heater ON. (or heater circuit or short)	2 driving cycles	Not applicable
P0171	Fuel system too lean	Short term fuel trim or total fuel trim (short and long terms added) is larger than specification for specified time or longer. (fuel trim toward rich side is large.)	2 driving cycles	Not applicable
P0172	Fuel system too rich	Short term fuel trim or total fuel trim (short and long term added) is smaller than specification for specified time or longer. (fuel trim toward lean side is large.)	2 driving cycles	Not applicable
P0300 P0301 P0302 P0303 P0304	Random misfire detected Cylinder 1 misfire detected Cylinder 2 misfire detected Cylinder 3 misfire detected Cylinder 4 misfire detected	Misfire of such level as to cause damage to three way catalyst	MIL flashing during misfire detection	Not applicable
		Misfire of such level as to deteriorate emission but not to cause damage to three way catalyst	2 driving cycles	Not applicable

DTC NO.	DETECTING ITEM	DETECTING CONDITION (DTC will set when detecting:)	MIL (vehicle with Immobilizer indicator lamp)	MIL (vehicle without Immobilizer indicator lamp)
P0325 (No.17)	Knock sensor circuit malfunction	Knock sensor circuit low input Knock sensor circuit high input	1 driving cycle	1 driving cycle
P0335 (No.23)	Crankshaft position sensor circuit malfunction	No signal for 2 sec. During engine cranking	1 driving cycle	1 driving cycle
P0340 (No.15)	Camshaft position sensor circuit malfunction	No signal during engine running	1 driving cycle	1 driving cycle
P0400	Exhaust gas recirculation flow malfunction detected	Excessive or insufficient EGR flow	2 driving cycles	Not applicable
P0420	Catalyst system efficiency below threshold	Output waveforms of HO2S-1 and HO2S-2 are similar. (Time from output voltage change of HO2S-1 to that of HO2S-2 is shorter than specification.)	2 driving cycles	Not applicable
P0443	Purge control valve circuit malfunction	Purge control valve circuit is open or shorted to ground	2 driving cycles	Not applicable
P0481	A/C condenser fan control circuit malfunction	A/C condenser fan relay terminal voltage is low when fan command is not outputted	2 driving cycles	Not applicable
P0500 (No.16)	Vehicle speed sensor malfunction	No signal while running in “D” range or during fuel cut at decelerating	2 driving cycles	1 driving cycle
P0505	Idle control system malfunction	No closed signal to IAC valve is detected	2 driving cycles	Not applicable
P0601 (No.71)	Internal control module memory check sum error	Data write error (or check sum error) when written into ECM	2 driving cycles	Not applicable
P1450	Barometric pressure sensor circuit malfunction	Barometric pressure is lower or higher than specification. (or sensor malfunction)	1 driving cycle	Not applicable
P1451	Barometric pressure sensor performance problem	Difference between manifold absolute pressure (MAP sensor value) and barometric pressure (barometric pressure sensor value) is larger than specification during cranking.	2 driving cycles	Not applicable
P1500	Starter signal circuit malfunction	Starter signal is not inputted from engine cranking till its start and after or it is always inputted	2 driving cycles	Not applicable
P1510	ECM backup power source malfunction	No backup power after starting engine	1 driving cycle	Not applicable
P1600	Serial communication problem between ECM and TCM	No signal or check sum error while engine running	1 driving cycle	Not applicable
P1717	AT D-range signal circuit malfunction	No “D” range (park/neutral position signal) is inputted while vehicle running	2 driving cycles	Not applicable
P1570	ABS signal circuit malfunction	ABS signal ON (low voltage) when engine start	Not applicable	1 driving cycle

DTC NO.	DETECTING ITEM	DETECTING CONDITION (DTC will set when detecting:)	MIL
P0702	Transmission Control System Electrical	Refer to Section 7B. These DTCs can not be read on vehicle without Immobilizer indicator lamp (by ECM application of SUZUKI scan tool).	
P0705	Transmission Range Sensor Circuit Malfunction		
P0710	Transmission Temperature Sensor Circuit Malfunction		
P0715	Input/Turbine Speed Sensor Circuit Malfunction		
P0720	Output Shaft Speed Sensor Circuit Malfunction		
P0725	Engine Speed Input Circuit Malfunction		
P0730	Incorrect Gear Ratio		
P0743	Torque Converter Clutch Circuit Electrical		
P0753	Shift Solenoid A Electrical		
P0758	Shift Solenoid B Electrical		
P0763	Shift Solenoid C Electrical		
P0768	Shift Solenoid D Electrical		
P1700	Throttle Position Signal Input Malfunction		
P1702	Internal Control Module Memory Check Some Error		
P1709	Engine Coolant Temperature Signal Input Malfunction		
P1887	Transfer Signal		
P1620 (No.84)	ECU code not registered	Refer to Section 8G.	
P1621 (No.83)	No ECU code transmitted from Immobilizer Control Module		
P1622 (No.82)	Faulty in ECM		
P1623 (No.81)	ECU code not matched		

Note:

- **For ( ) marked No. in DTC column, it is used for vehicle without Immobilizer indicator lamp.**
- **DTC No.12 appears when none of the other codes is identified (vehicle without Immobilizer indicator lamp).**

FAIL-SAFE TABLE

When any of the following DTCs is detected, ECM enters fail-safe mode as long as malfunction continues to exist but that mode is canceled when ECM detects normal condition after that.

DTC NO.	DETECTED ITEM	FAIL-SAFE OPERATION (SYMPTOM)
P0105 (No.11)	Manifold absolute pressure sensor circuit malfunction	ECM uses value determined by throttle opening and engine speed.
P0110 (No.18)	Intake air temp. sensor circuit malfunction	ECM controls actuators assuming that intake air temperature is 20°C (68°F).
P0115 (No.19)	Engine coolant temp. sensor circuit malfunction	ECM controls actuators assuming that engine coolant temperature is 80°C (176°F).
P0120 (No.13)	Throttle position sensor circuit malfunction	ECM controls actuators assuming that throttle opening is 20°. (High idle speed)
P0335 (No.23)	Crankshaft position sensor circuit malfunction	ECM controls injection system sequential injection to synchronous injection. (Cranking for a few seconds to start engine)
P0340 (No.15)	Camshaft position sensor circuit malfunction	ECM controls injection system sequential injection to synchronous injection. (Cranking for a few seconds to start engine)
P0500 (No.16)	Vehicle speed sensor malfunction	ECM stops idle air control.
P1450	Barometric pressure sensor low/high input	ECM controls actuators assuming that barometric pressure is 100 kPa (760 mmHg).
P1570 (No.21)	ABS signal circuit malfunction	ECM controls actuators assuming that ABS signal is OFF.

VISUAL INSPECTION

Visually check following parts and systems.

INSPECTION ITEM	REFERRING SECTION
● Engine oil – – – – – level, leakage	Section 0B
● Engine coolant – – – – – level, leakage	Section 0B
● Fuel – – – – – level, leakage	Section 0B
● A/T fluid – – – – – level, leakage	Section 0B
● Air cleaner element – – – – – dirt, clogging	Section 0B
● Battery – – – – – fluid level, corrosion of terminal	
● Water pump belt – – – – – tension, damage	Section 0B
● Throttle cable – – – – – play, installation	Section 6E
● Vacuum hoses of air intake system – – – – – disconnection, looseness, deterioration, bend	
● Connectors of electric wire harness – – – – – disconnection, friction	
● Fuses – – – – – burning	Section 8
● Parts – – – – – installation, bolt – – – – – looseness	
● Parts – – – – – deformation	
● Other parts that can be checked visually	
Also check following items at engine start, if possible	
● Malfunction indicator lamp	Section 6
● Charge warning lamp	Section 6H
● Engine oil pressure warning lamp — Operation	Section 8 (section 6 for pressure check)
● Engine coolant temp. meter	Section 8
● Fuel level meter	Section 8
● Tachometer, if equipped	
● Abnormal air being inhaled from air intake system	
● Exhaust system – – – – – leakage of exhaust gas, noise	
● Other parts that can be checked visually	

ENGINE BASIC INSPECTION

This check is very important for troubleshooting when ECM has detected no DTC and no abnormality has been found in visual inspection.
Follow the flow table carefully.

STEP	ACTION	YES	NO
1	Was “ENGINE DIAG. FLOW TABLE” performed?	Go to Step 2.	Go to “ENGINE DIAG. FLOW TABLE”.
2	Check battery voltage. Is it 11 V or more?	Go to Step 3.	Charge or replace battery.
3	Is engine cranked?	Go to Step 4.	Go to “DIAGNOSIS” in Section 6G.
4	Does engine start?	Go to Step 5.	Go to Step 7.
5	Check idle speed as follows: 1) Warm up engine to normal operating temp. 2) Shift transmission to neutral position for M/T (“P” position for A/T). 3) All of electrical loads are switched off. 4) Check engine idle speed with scan tool. See Fig. 1. Is it 650 – 750 r/min (700 – 800 r/min. for A/T vehicle)?	Go to Step 6.	Go to “ENGINE DIAGNOSIS TABLE”.
6	Check ignition timing as follows: 1) When not using SUZUKI scan tool, disconnect scan tool from DLC and connect test switch terminal of monitor coupler to ground. See Fig. 2. When using SUZUKI scan tool, select “MISC” mode on SUZUKI scan tool and fix ignition timing to initial one. See Fig. 3. 2) Remove air cleaner bolt and crips and shift air cleaner position to observe ignition timing. 3) Using timing light (1), check initial ignition timing. See Fig. 4. Is it 5° ± 3° BTDC at specified idle speed?	Go to “ENGINE DIAGNOSIS TABLE”.	Check ignition control related parts referring to Section 6F.
7	Check immobilizer system malfunction as follows (if equipped): 1) Check immobilizer indicator lamp or MIL (malfunction indicator lamp) for flashing. Is it flashing when ignition switch is turned to ON position?	Go to “DIAGNOSIS” in Section 8G.	Go to Step 8.
8	Check fuel supply as follows: 1) Check to make sure that enough fuel is filled in fuel tank. 2) Turn ON ignition switch for 2 seconds and then OFF. See Fig. 5. Is fuel return pressure (returning sounds) felt from fuel feed hose (1) when ignition switch is turned ON?	Go to Step 10.	Go to Step 9.
9	Check fuel pump for operating. 1) Was fuel pump operating sound heard from fuel filler for about 2 seconds after ignition switch ON and stop?	Go to “DIAG. FLOW TABLE B-3”.	Go to “DIAG. FLOW TABLE B-2”.

STEP	ACTION	YES	NO
10	Check ignition spark as follows: 1) Disconnect injector couplers. 2) Remove spark plugs and connect them to high tension cords. 3) Ground spark plugs. 4) Crank engine and check if each spark plug sparks. Is it in good condition?	Go to Step 11.	Go to “DIAGNOSIS” in Section 6F.
11	Check fuel injector for operation as follows: 1) Install spark plugs and connect injector connectors. 2) Using sound scope (1), check operating sound of each injector (2) when cranking engine. See Fig. 6. Was injector operating sound heard from all injectors?	Go to “ENGINE DIAGNOSIS TABLE”.	Go to “DIAG. FLOW TABLE B-1”.

Fig. 1 for Step 5

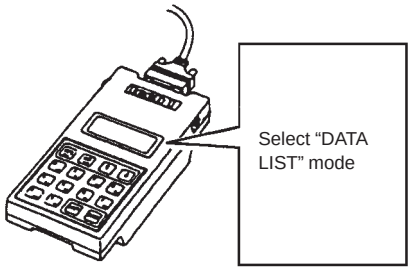

Fig. 2 for Step 6

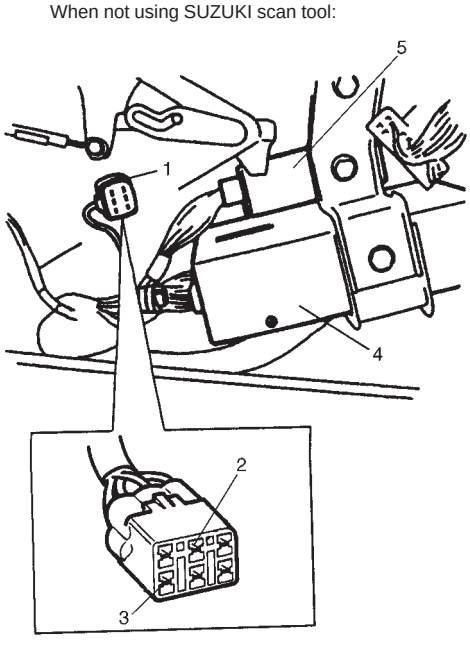

Fig. 3 for Step 6

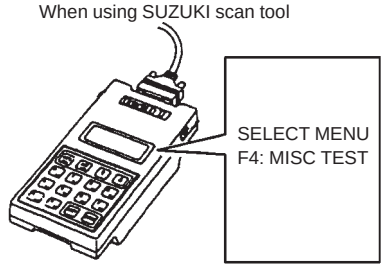

Fig. 4 for Step 6

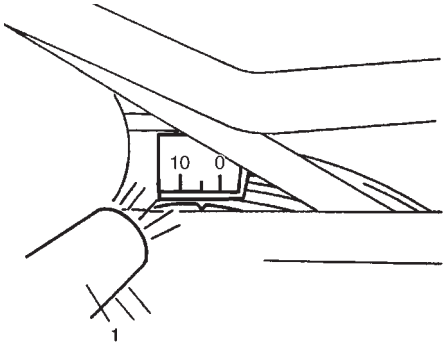

Fig. 5 for Step 8

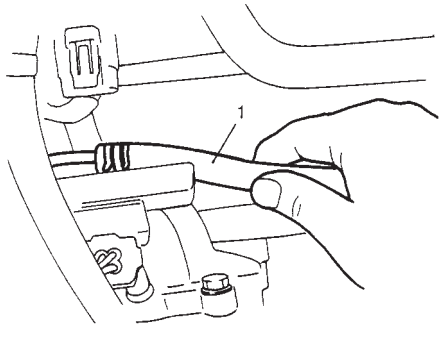

Fig. 6 for Step 11

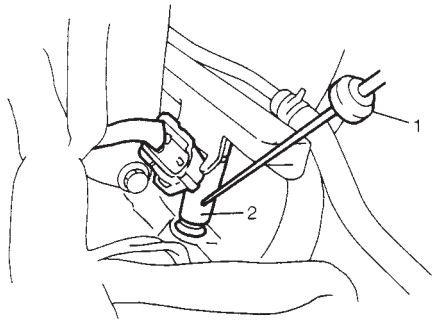

ENGINE DIAGNOSIS TABLE

Perform troubleshooting referring to following table when ECM has no DTC and no abnormality found in visual inspection and engine basic inspection previously.

Condition	Possible Cause	Referring Item
Hard Starting (Engine cranks OK)	**Ignition system out of order**	
	● Faulty ignition coil	Diagnosis in Section 6F.
	Engine and emission control system out of order	
	● Faulty CMP sensing rotor or CKP sensing rotor	CMP sensing rotor or CKP sensing rotor inspection in Section 6E.
	● Faulty idle air control system	Diagnostic Flow Table B-4
	● Faulty ECT sensor, TP sensor, CKP sensor, CMP sensor or MAP sensor	ECT sensor, TP sensor, CKP sensor, CMP sensor or MAP sensor in Section 6E.
	● Fuel pressure out of specification	Diagnostic Flow Table B-3
	● Faulty fuel injector	Diagnostic Flow Table B-1
	● Faulty ECM	Inspection of ECM and its circuit in Section 6E.
	● Malfunctioning PCV system	PCV hose and PCV valve in Section 6E.
	Low compression	Compression check in Section 6A1.
	● Improper valve lash	Valve lash check in Section 6A1.
	● Improper valve timing	Timing chain and chain tensioner in Section 6A1.
	● Compression leak from valve seat	Valves and cylinder head in Section 6A1
	● Sticky valve stem	Valves and cylinder head in Section 6A1.
	● Weak or damaged valve springs	Valves spring in Section 6A1.
	● Compression leak at cylinder head gasket	Valves and cylinder head in Section 6A1.
	● Sticking or damaged piston ring	Piston rings in Section 6A1.
	● Worn piston, ring or cylinder	Pistons and piston rings in Section 6A1.

Condition	Possible Cause	Reference Item
Engine has no power	**Engine overheating**	Refer to “Overheating” of this table.
	Ignition system out of order	
	● Faulty ignition coil	Diagnosis in Section 6F.
	● Faulty knock sensor	Knock sensor malfunction in this section.
	Engine and emission control system out of order.	
	● Fuel pressure out of specification	Diagnostic Flow Table B-3
	● Faulty injector	Diagnostic Flow Table B-1
	● Faulty TP sensor, ECT sensor or MAP sensor	TP sensor, ECT sensor or MAP sensor in Section 6E.
	● Faulty ECM	Inspection of ECM and its circuit in Section 6E.
	● Malfunctioning EGR valve (if equipped)	EGR system inspection in Section 6E.
	● Maladjusted accelerator cable play	Accelerator cable play in Section 6E.
	Low compression	Previously outlined.
	Others	
	● Dragging brakes	Diagnosis in Section 5.
	● Slipping clutch	Diagnosis in Section 7C.
Improper engine idling or engine fails to idle	**Ignition system out of order**	
	● Faulty ignition coil	Diagnosis in Section 6F.
	Engine overheating	Refer to “Overheating” of this table.
	Engine and emission control system out of order.	
	● Fuel pressure out of specification	Diagnostic Flow Table B-3
	● Faulty idle air control system	Diagnostic Flow Table B-4
	● Faulty evaporative emission control system	EVAP control system check in Section 6E.
	● Faulty injector	Diagnostic Flow Table B-1
	● Faulty ECT sensor, TP sensor or MAP sensor	ECT sensor, TP sensor or MAP sensor in Section 6E.
	● Malfunctioning PCV system	PCV hose and PCV valve in Section 6F.
	● Faulty ECM	Inspection of ECM and its circuit in Section 6E.
	● Faulty EGR system (if equipped)	EGR system in Section 6E.
	Low compression	Previously outlined.
	Others	

Condition	Possible Cause	Reference Item
Engine hesitates (Momentary lack of response as the accelerator is depressed. Can occur at all vehicle speeds. Usually most severe when first trying to make the vehicle move, as from a stop sign.)	**Ignition system out of order** ● Faulty ignition coil **Engine overheating** **Engine and emission control system out of order.** ● Fuel pressure out of specification ● Faulty injector ● Faulty TP sensor, ECT sensor or MAP sensor ● Faulty ECM ● Malfunctioning EGR valve (if equipped) **Low compression**	 Diagnosis in Section 6F. Refer to “Overheating” of this table. Diagnostic Flow Table B-3 Diagnostic Flow Table B-1 TP sensor, ECT sensor or MAP sensor in Section 6E. Inspection of ECM and its circuit in Section 6E. EGR system in Section 6E. Previously outlined.
Surges (Engine power variation under steady throttle or cruise. Feels like the vehicle speeds up and down with no change in the accelerator pedal.)	**Ignition system out of order** ● Faulty ignition coil or high-tension cord **Engine and emission control system out of order.** ● Variable fuel pressure ● Faulty MAP sensor (if equipped) ● Faulty injector ● Faulty ECM ● Malfunctioning EGR valve (if equipped)	 Diagnosis in Section 6F. Diagnostic Flow Table B-3 MAP sensor in Section 6E. Diagnostic Flow Table B-1 Inspection of ECM and its circuit in Section 6E. EGR system in Section 6E.
Excessive detonation (The engine makes sharp metallic knocks that change with throttle opening. Sounds like pop corn popping.)	**Engine overheating** **Ignition system out of order.** ● Faulty spark plug **Engine and emission control system out of order.** ● Clogged fuel filter and fuel lines ● Malfunctioning EGR valve (if equipped) ● Poor preformance of knock sensor, ECT sensor or MAP sensor ● Faulty injector ● Faulty ECM **Others** ● Excessive combustion chamber deposits	Refer to “Overheating” of this table. Spark plugs in Section 6F. Diagnostic Flow Table B-3 EGR system in Section 6E. Knock sensor in Section 6, ECT sensor or MAP sensor in Section 6E. Diagnostic Flow Table B-1 Inspection of ECM and its circuit in Section 6E. Piston and cylinder head in Section 6A.

Condition	Possible Cause	Reference Item
Overheating	● Inoperative thermostat	Thermostat in Section 6B.
	● Faulty A/C condenser fan motor or its circuit	A/C condenser fan control system check in Section 6E.
	● Loose or slip water pump belt	ITEM1-1 Drive belt inspection and change in Section 0B.
	● Poor water pump performance	Water pump in Section 6B.
	● Clogged or leaky radiator	Radiator in Section 6B.
	● Improper engine oil grade	ITEM1-3 Engine oil and oil filter change in Section 0B.
	● Clogged oil filter or oil strainer	Oil pressure check in Section 6A1.
	● Poor oil pump performance	Oil pressure check in Section 6A1.
	● Dragging brakes	Diagnosis in Section 5.
	● Slipping clutch	Diagnosis in Section 7C.
	● Blown cylinder head gasket	Valves and cylinder head inspection in Section 6A1.
Poor gasoline mileage	**Ignition system out of order.**	
	● Faulty ignition coil	Diagnosis in Section 6F.
	Engine and emission control system out of order.	
	● Fuel pressure out of specification	Diagnostic Flow Table B-3
	● Faulty TP sensor, ECT sensor or MAP sensor	TP sensor, ECT sensor or MAP sensor in Section 6E.
	● Faulty injector	Diagnostic Flow Table B-1
	● Faulty ECM	Inspection of ECM and its circuit in Section 6E.
	● Malfunctioning EGR valve (if equipped)	EGR system in Section 6E.
	● High idle speed	Refer to item “Improper engine idle speed” previously outlined.
	Low compression	Previously outlined.
	Others	
	● Poor valve seating	Valves and cylinder head in Section 6A1.
	● Dragging brakes	Diagnosis in Section 5.
	● Slipping clutch	Diagnosis in Section 7C.
	● Thermostat out of order	Thermostat in Section 6B.
	● Improper tire pressure	Refer to Section 3F.

Condition	Possible Cause	Reference Item
Excessive engine oil consumption	**Oil entering combustion chamber**	
	● Sticky piston ring	Piston and cylinder in Section 6A1.
	● Worn piston and cylinder	Cylinders, pistons and piston rings in Section 6A1.
	● Worn piston ring groove and ring	Pistons and piston rings in Section 6A1.
	● Improper location of piston ring gap	Pistons installation in Section 6A1.
	● Worn or damaged valve stem seal	Valves and cylinder head in Section 6A1.
	● Worn valve stem	Valves inspection in Section 6A1.
Low oil pressure	● Improper oil viscosity	ITEM1-3 Engine oil and oil filter change in Section 0B.
	● Malfunctioning oil pressure switch	Oil pressure switch in Section 8.
	● Clogged oil strainer	Oil pan and oil pump strainer in Section 6A1.
	● Functional deterioration of oil pump	Oil pump in Section 6A1.
	● Worn oil pump relief valve	Oil pump in Section 6A1.
	● Excessive clearance in various sliding parts	Refer to Section 6A1.
Engine noise Note: Before checking the mechanical noise, make sure that: ● Ignition timing is properly adjusted. ● Specified spark plug is used. ● Specified fuel is used.	**Valve noise**	
	● Improper valve lash	Valve lash in Section 6A1.
	● Worn valve stem and guide	Valves and cylinder head in Section 6A1.
	● Weak or broken valve spring	Valve springs in Section 6A1.
	● Warped or bent valve	Valves and cylinder head in Section 6A1.
	● Loose camshaft housing bolts	Camshaft in Section 6A1.
	Piston, ring and cylinder noise	
	● Worn piston, ring and cylinder bore	Pistons and cylinders in Section 6A1.
	Connecting rod noise	
	● Worn crankpin bearing	Crankpin and connecting rod bearing in Section 6A1.
	● Worn crankpin	Crankpin and connecting rod bearing in Section 6A1.
	● Loose connecting rod nuts	Connecting rod in Section 6A1.
	● Low oil pressure	Previously outlined.
	Crankshaft noise	
	● Low oil pressure	Previously outlined.
	● Worn crankshaft journal bearing	Crankshaft and bearing in Section 6A1.
	● Worn crankshaft journal	Crankshaft and bearing in Section 6A1.
	● Loose lower crankcase (bearing cap) bolts	Crankshaft in Section 6A1.
	● Excessive crankshaft thrust play	Crankshaft in Section 6A1.

Condition	Possible Cause	Referring Item
Excessive hydrocarbon (HC) emission or Excessive carbon monoxide (CO) emission	**Ignition system out of order**	
	● Faulty ignition coil	Diagnosis in Section 6F.
	Engine and Emission control system out of order.	
	● Fuel pressure out of specification	Diagnostic Flow Table B-3
	● Lead contamination of three way catalytic converter	Maintenance in Section 6K.
	● Malfunctioning PCV system	PCV hose and PCV valve in Section 6E.
	● Faulty EVAP control system	EVAP control system check in Section 6E.
	● Closed loop system (A/F feed back compensation) fails	Check oxygen sensor output voltage. Refer to DTC P0130 (No.14) Table in this section.
	– Faulty TP sensor	
	– Faulty ECT sensor or MAP sensor	
	– Faulty oxygen sensor	
	● Faulty injector	Diagnostic Flow Table B-1
	● Faulty ECM	Inspection of ECM and its circuit in Section 6E.
	Low compression	Previously outlined.
Excessive nitrogen oxides (NOx) emission	**Engine and emission control system out of order**	
	● Fuel pressure out of specification	Diagnostic Flow Table B-3
	● Lead contamination of three way catalytic converter	Maintenance in Section 6K.
	● Closed loop system (A/F feed back compensation) fails	Check oxygen sensor output voltage Refer to DTC P0130 (No.14) Table in this section.
	– Faulty TP sensor	
	– Faulty ECT sensor or MAP sensor	
	– Faulty oxygen sensor	
	● Faulty injector	Diagnostic Flow Table B-1
	● Faulty ECM	Inspection of ECM and its circuit in Section 6E.
	● Faulty EGR system (if equipped)	EGR system in Section 6E.

SCAN TOOL DATA

As the data values given below are standard values estimated on the basis of values obtained from the normally operating vehicles by using a scan tool, use them as reference values. Even when the vehicle is in good condition, there may be cases where the checked value does not fall within each specified data range. Therefore, judgment as abnormal should not be made by checking with these data alone.

Also, conditions in the below table that can be checked by the scan tool are those detected by ECM and output from ECM as commands and there may be cases where the engine or actuator is not operating (in the condition) as indicated by the scan tool. Be sure to use the timing light to check the ignition timing.

NOTE:

- **With the generic scan tool, only star (☆) marked data in the table below can be read.**
- **The triangle (Δ) marked data in the table below can not be read for vehicle without immobilizer indicator lamp at combination meter.**
- **When checking the data with the engine running at idle or racing, be sure to shift M/T gear to the neutral gear position and A/T gear to the "Park" position and pull the parking brake fully. Also, if nothing or "no load" is indicated, turn OFF A/C, all electric loads, P/S and all the other necessary switches.**

		SCAN TOOL DATA	CONDITION		REFERENCE VALUES
	☆	FUEL SYSTEM B1 (FUEL SYSTEM STATUS)	At specified idle speed after warming up		CLOSED (closed loop)
	☆	CALC LOAD (CALCULATED LOAD VALUE)	At specified idle speed with no load after warming up		3 – 9%
			At 2500 r/min with no load after warming up		12 – 17%
	☆	COOLANT TEMP. (ENGINE COOLANT TEMP.)	At specified idle speed after warming up		80 – 100°C, 176 – 212°F
	☆	SHORT FT B1 (SHORT TERM FUEL TRIM)	At specified idle speed after warming up		–20 – +20%
	☆	LONG FT B1 (LONG TERM FUEL TRIM)	At specified idle speed after warming up		–15 – +15%
	☆	MAP (INTAKE MANIFOLD ABSOLUTE PRESSURE)	At specified idle speed with no load after warming up		30 – 37 kPa, 220 – 340 mmHg
	☆	ENGINE SPEED	At idling with no load after warming up		Desired idle speed ± 50 r/min
	☆	VEHICLE SPEED	At stop		0 km/h, 0 MPH
	☆	IGNITION ADVANCE (IGNITION TIMING ADVANCE FOR NO.1 CYLINDER)	At specified idle speed with no load after warming up		6 – 16° BTDC
	☆	INTAKE AIR TEMP.	At specified idle speed after warming up		Ambient temp. +15°C (59°F) / –5°C (23°F)
	☆	MAF (MASS AIR FLOW RATE)	At specified idle speed with no load after warming up		1 – 4 gm/sec
	☆	THROTTLE POS (THROTTLE POSITION)	Ignition switch ON/engine stopped	Throttle valve fully closed	7 – 18%
				Throttle valve fully open	70 – 90%
	☆	O2S B1 S1 (HEATED OXYGEN SENSOR-1)	At specified idle speed after warming up		0.01 – 0.95 V
Δ	☆	O2S B1 S2 (HEATED OXYGEN SENSOR-2)	When engine is running at 2000 r/min. for 3 min or longer after warming up.		0.01 – 0.95 V
Δ	☆	PSP SW	No load to power steering.		OFF

		SCAN TOOL DATA	CONDITION		REFERENCE VALUES	
		DESIRED IDLE (DESIRED IDLE SPEED)	At idling with no load after warming up, M/T at neutral, A/T at "P" range		M/T	700 r/min
					A/T	750 r/min
		TP SENSOR VOLT (THROTTLE POSITION SENSOR OUTPUT VOLTAGE)	Ignition switch ON/engine stopped	Throttle valve fully closed	More than 0.2 V	
				Throttle valve fully open	Less than 4.8 V	
		INJ PULSE WIDTH (FUEL INJECTION PULSE WIDTH)	At specified idle speed with no load after warming up		2.0 – 3.6 msec.	
			At 2500 r/min with no load after warming up		2.0 – 3.6 msec.	
		IAC FLOW DUTY (IDLE AIR CONTROL FLOW DUTY)	At idling with no load after warming up		5 – 25%	
		TOTAL FT B1	At specified idle speed after warming up		–35 – +35%	
		BATTERY VOLTAGE	Ignition switch ON/engine stop		12 – 15 V	
		CANIST PRG DUTY (EVAP CANISTER PURGE FLOW DUTY)	————		0 – 100%	
		CLOSED THROT POS (CLOSED THROTTLE POSITION)	Throttle valve at idle position		ON	
			Throttle valve opens larger than idle position		OFF	
		FUEL CUT	When engine is at fuel cut condition		ON	
			Other than fuel cut condition		OFF	
		A/C CONDENSER FAN	Ignition switch ON	A/C not operating	OFF	
				A/C operating	ON	
		ELECTRIC LOAD	Ignition switch ON/Headlight, small light, heater fan and rear window defogger all turned OFF		OFF	
			Ignition switch ON/Headlight, small light, heater fan or rear window defogger turned ON		ON	
		A/C SWITCH	Engine running after warming up, A/C not operating		OFF	
			Engine running after warming up, A/C operating		ON	
		PNP SIGNAL (PARK/ NEUTRAL POSITION SIGNAL) A/T only	Ignition switch ON	Selector lever in "P" or "N" position	P/N Range	
				Selector lever in "R", "D", "2" or "L" position	D Range	
		EGR VALVE	At specified idle speed after warming up		0%	
Δ		FUEL TANK LEVEL	————		0 – 100%	
		BAROMETRIC PRESS	————		Display the barometric pressure	
		FUEL PUMP	Within 3 seconds after ignition switch ON or engine running		ON	
			Engine stop at ignition switch ON.		OFF	
		BRAKE SW	Ignition switch ON	Brake pedal is depressing	ON	
				Brake pedal is releasing	OFF	
		BLOWER FAN	Ignition switch ON	Blower fan switch ON	ON	
				Blower fan switch OFF	OFF	
		A/C MAG CLUTCH	Ignition switch ON	A/C operating	ON	
				A/C not operating	OFF	

SCAN TOOL DATA DEFINITIONS

FUEL SYSTEM (FUEL SYSTEM STATUS)
Air/fuel ratio feedback loop status displayed as either open or closed loop. Open indicates that ECM ignores feedback from the exhaust oxygen sensor.
Closed indicates final injection duration is corrected for oxygen sensor feedback.

CALC LOAD (CALCULATED LOAD VALUE, %)
Engine load displayed as a percentage of maximum possible load. Value is calculated mathematically using the formula: actual (current) intake air volume ÷ maximum possible intake air volume x 100%.

COOLANT TEMP.
(ENGINE COOLANT TEMPERATURE, °C, °F)
It is detected by engine coolant temp. sensor

SHORT FT B1 (SHORT TERM FUEL TRIM, %)
Short term fuel trim value represents short term corrections to the air/fuel mixture computation. A value of 0 indicates no correction, a value greater than 0 means an enrichment correction, and a value less than 0 implies an enleanment correction.

LONG FT B1 (LONG TERM FUEL TRIM, %)
Long term fuel trim Value represents long term corrections to the air/fuel mixture computation. A value of 0 indicates no correction, a value greater than 0 means an enrichment correction, and a value less than 0 implies an enleanment correction.

MAP (INTAKE MANIFOLD ABSOLUTE PRESSURE, kPa, inHg)
It is detected by manifold absolute pressure sensor and used (among other things) to compute engine load.

ENGINE SPEED (rpm)
It is computed by reference pulses from crankshaft position sensor.

VEHICLE SPEED (km/h, MPH)
It is computed based on pulse signals from vehicle speed sensor.

IGNITION ADVANCE
(IGNITION TIMING ADVANCE FOR NO.1 CYLINDER, °)
Ignition timing of NO.1 cylinder is commanded by ECM. The actual ignition timing should be checked by using the timing light.

INTAKE AIR TEMP. (°C, °F)
It is detected by intake air temp. sensor and used to determine the amount of air passing into the intake manifold as air density varies with temperature.

MAF (MASS AIR FLOW RATE, gm/s, lb/min)
It represents total mass of air entering intake manifold which is computed based on signals from MAP sensor, IAT sensor, TP sensor, etc.

THROTTLE POS
(ABSOLUTE THROTTLE POSITION, %)
When throttle position sensor is fully closed position, throttle opening is indicated as 0% and 100% full open position.

OXYGEN SENSOR B1 S1
(HEATED OXYGEN SENSOR-1, V)
It indicates output voltage of HO2S-1 installed on exhaust manifold (pre-catalyst).

OXYGEN SENSOR B1 S2
(HEATED OXYGEN SENSOR-2, V)
It indicates output voltage of HO2S-2 installed on exhaust pipe (post-catalyst). It is used to detect catalyst deterioration.

DESIRED IDLE (DESIRED IDLE SPEED, rpm)
The Desired Idle Speed is an ECM internal parameter which indicates the ECM requested idle. If the engine is not running, this number is not valid.

TP SENSOR VOLT (THROTTLE POSITION SENSOR OUTPUT VOLTAGE, V)
The Throttle Position Sensor reading provides throttle valve opening information in the form of voltage.

INJ PULSE WIDTH
(FUEL INJECTION PULSE WIDTH, msec.)
This parameter indicates time of the injector drive (valve opening) pulse which is output from ECM (but injector drive time of NO.1 cylinder for multiport fuel injection).

IAC FLOW DUTY (IDLE AIR (SPEED) CONTROL DUTY, %)
This parameter indicates current flow time rate within a certain set cycle of IAC valve (valve opening rate) which controls the amount of bypass air (idle speed).

TOTAL FUEL TRIM (%)
The value of Total Fuel Trim is obtained by putting values of short Term Fuel Trim and Long Term Fuel Trim together. This value indicates how much correction is necessary to keep the air/fuel mixture stoichiometrical.

BATTERY VOLTAGE (V)
This parameter indicates battery positive voltage inputted from main relay to ECM.

CANIST PURGE DUTY (EVAP CANISTER PURGE FLOW DUTY, %)

This parameter indicates valve ON (valve open) time rate within a certain set cycle of EVAP purge solenoid valve which controls the amount of EVAP purge.
0% means that the purge valve is completely closed while 100% is a fully open valve.

CLOSED THROTTLE POSITION (ON/OFF)

This parameter will read ON when throttle valve is fully closed, or OFF when the throttle is not fully closed.

FUEL CUT (ON/OFF)

ON : Fuel being cut (output signal to injector is stopped)
OFF : Fuel not being cut

A/C CONDENSER FAN (A/C CONDENSER FAN RELAY, ON/OFF)

ON : Command for condenser fan relay operation being output.
OFF : Command for relay operation not being output.

ELECTRIC LOAD (ON/OFF)

ON : Headlight, small light, heater fan or rear window defogger ON signal inputted.
OFF : Above electric loads all turned OFF.

A/C SWITCH (ON/OFF)

ON : Command for A/C operation being output from ECM to A/C amplifier.
OFF : Command for A/C operation not being output.

FUEL TANK LEVEL (%)

This parameter indicates approximate fuel level in the fuel tank. As the detectable range of the fuel level sensor is set as 0 to 100%, however, with some models whose fuel tank capacity is smaller, the indicated fuel level may be only 70% even when the fuel tank is full.

PNP SIGNAL (PARK/NEUTRAL POSITION SIGNAL, P/N RANGE or D RANGE)

It is detected by signal from TCM.
D range : A/T is in “R”, “D”, “2” or “L” range.
P/N range : A/T is in “P” or “N” range or the above signal is not inputted from TCM.

EGR VALVE (%)

This parameter indicates opening rate of EGR valve which controls the amount of EGR flow.

PSP SW

The Power Steering Pressure switch parameter displays ON when steering wheel is turned all the way to the right or left.

INSPECTION OF ECM AND ITS CIRCUITS

ECM and its circuits can be checked at ECM wiring connectors by measuring voltage and resistance.

CAUTION:
ECM cannot be checked by itself. It is strictly prohibited to connect voltmeter or ohmmeter to ECM with connector disconnected from it.

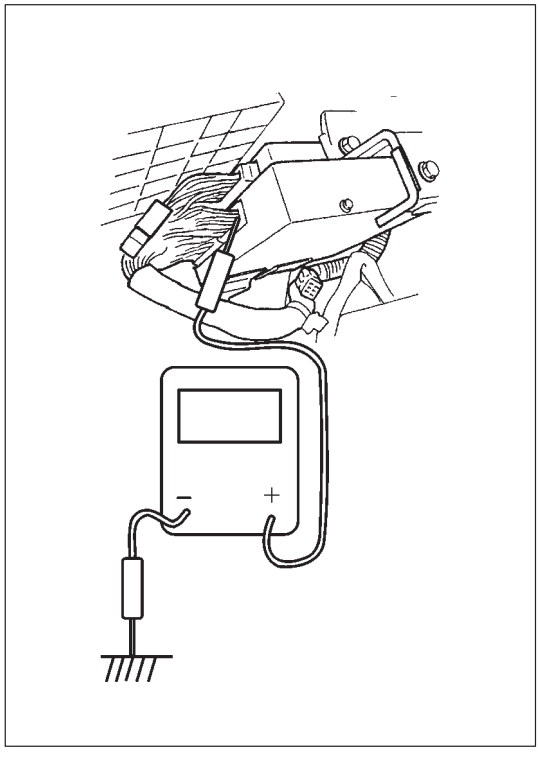

VOLTAGE CHECK

1) Remove ECM from body referring to Section 6E.
2) Check voltage at each terminal of connectors connected.

NOTE:
As each terminal voltage is affected by the battery voltage, confirm that it is 11 V or more when ignition switch is ON.

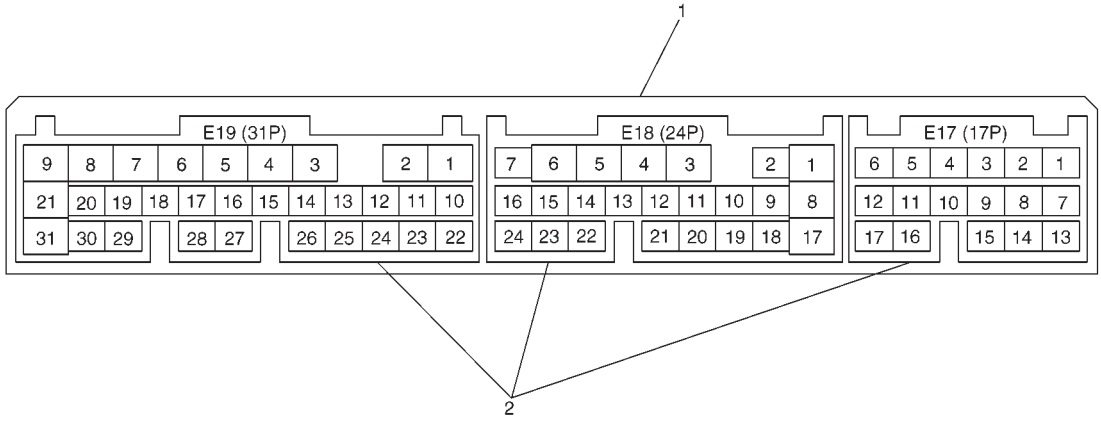

1. ECM
2. ECM connectors (Viewed from harness side)

ECM TERMINAL VOLTAGE VALUES TABLE

For TYPE A (See NOTE)

TERMINAL NO.		CIRCUIT	NORMAL VOLTAGE	CONDITION
CONNECTOR "E19"	1	Ground	—	—
	2	Ground	—	—
	3	Ground	—	—
	4	EVAP canister purge valve	10 – 14 V	Ignition switch ON
	5	Power steering pressure switch (if equipped)	0 – 1.3 V	While engine running at idle speed, turn steering wheel to right or left as far as it stops
			10 – 14 V	Ignition switch ON
	6	Idle air control valve	0 – 13 V	At specified idle speed after engine warmed up
	7	Heater of HO2S-1	10 – 14 V	Ignition switch ON
	8	Fuel injector NO.4	10 – 14 V	Ignition switch ON
	9	Fuel injector NO.1	10 – 14 V	Ignition switch ON
	10	Sensor ground	—	—
	11	Camshaft position sensor	0 – 0.8 V and 4 – 6 V	Ignition switch ON
	12	—	—	—
	13	Heater oxygen sensor-1	Refer to DTC P0130 diag. flow table	
		CO adjusting resistor (w/o HO2S)	0 – 5 V	Ignition switch ON position
	14	Engine coolant temp. sensor	0.55 – 0.95 V	Ignition switch ON Engine coolant temp.: 80°C (176°F)
	15	Intake air temp. sensor	2.0 – 2.7 V	Ignition switch ON Intake air temp.: 20°C (68°F)
	16	Throttle opening signal	0.2 – 1.0 V	Ignition switch ON position and throttle valve at idle position
			2.8 – 4.8 V	Ignition switch ON position and throttle valve fully open
	17	EGR valve (stepper motor coil 3, if equipped)	10 – 14 V	Ignition switch ON position leaving engine OFF
	18	EGR valve (stepper motor coil 1, if equipped)	10 – 14 V	Ignition switch ON position leaving engine OFF
	19	Ignition coil #2	—	—
	20	Ignition coil #1	—	—
	21	Fuel injector NO.2	10 – 14 V	Ignition switch ON
	22	Power source for sensor	4.75 – 5.25 V	Ignition switch ON
	23	Crankshaft position sensor	0 – 0.8 or 4 – 5 V	Ignition switch ON position
	24	—	—	—
	25	Knock sensor	About 2.5 V	At specified idle speed after engine warmed up
	26	Manifold absolute pressure sensor	3.3 – 4.0 V	Ignition switch ON Barometric pressure: 100 kPa (760 mmHg)
	27	A/C evaporator temp. sensor	2.0 – 2.3 V	Ignition switch ON A/C evaporation temp. sensor at 25°C (77°F)
	28	EGR valve (stepper motor coil 4, if equipped)	10 – 14 V	Ignition switch ON position leaving engine OFF
	29	EGR valve (stepper motor coil 2, if equipped)	10 – 14 V	Ignition switch ON position leaving engine OFF
	30	—	—	—
	31	Fuel injector NO.3	10 – 14 V	Ignition switch ON

NOTE:

Type A is other than follows.

Type B is left hand steering vehicle equipped with fasten seat belt light and EGR valve or right hand steering vehicle equipped with fasten seat belt light and immobilizer control system.

For TYPE B (See NOTE)

TERMINAL NO.		CIRCUIT	NORMAL VOLTAGE	CONDITION
CONNECTOR "E19"	1	Ground	—	—
	2	Ground	—	—
	3	Ground	—	—
	4	EVAP canister purge valve	10 – 14 V	Ignition switch ON
	5	Power steering pressure switch (if equipped)	0 – 1.3 V	While engine running at idle speed, turn steering wheel to right or left as far as it stops
			10 – 14 V	Ignition switch ON
	6	Idle air control valve	0 – 13 V	At specified idle speed after engine warmed up
	7	Heater of HO2S-1	10 – 14 V	Ignition switch ON
	8	Fuel injector NO.4	10 – 14 V	Ignition switch ON
	9	Fuel injector NO.1	10 – 14 V	Ignition switch ON
	10	Sensor ground	—	—
	11	Camshaft position sensor	0 – 0.8 V and 4 – 6 V	Ignition switch ON
	12	—	—	—
	13	Heater oxygen sensor-1	Refer to DTC P0130 diag. flow table	
		CO adjusting resistor (w/o HO2S)	0 – 5 V	Ignition switch ON position
	14	Engine coolant temp. sensor	0.55 – 0.95 V	Ignition switch ON Engine coolant temp.: 80°C (176°F)
	15	Intake air temp. sensor	2.0 – 2.7 V	Ignition switch ON Intake air temp.: 20°C (68°F)
	16	Throttle opening signal	0.2 – 1.0 V	Ignition switch ON position and throttle valve at idle position
			2.8 – 4.8 V	Ignition switch ON position and throttle valve fully open
	17	EGR valve (stepper motor coil 3, if equipped)	10 – 14 V	Ignition switch ON position leaving engine OFF
	18	EGR valve (stepper motor coil 1, if equipped)	10 – 14 V	Ignition switch ON position leaving engine OFF
	19	Ignition coil #2	—	—
	20	Ignition coil #1	—	—
	21	Fuel injector NO.2	10 – 14 V	Ignition switch ON
	22	Power source for sensor	4.75 – 5.25 V	Ignition switch ON
	23	Crankshaft position sensor	0 – 0.8 or 4 – 5 V	Ignition switch ON position
	24	—	—	—
	25	Knock sensor	About 2.5 V	At specified idle speed after engine warmed up
	26	Manifold absolute pressure sensor	3.3 – 4.0 V	Ignition switch ON Barometric pressure: 100 kPa (760 mmHg)
	27	—	—	—
	28	EGR valve (stepper motor coil 4, if equipped)	10 – 14 V	Ignition switch ON position leaving engine OFF
	29	EGR valve (stepper motor coil 2, if equipped)	10 – 14 V	Ignition switch ON position leaving engine OFF
	30	—	—	—
	31	Fuel injector NO.3	10 – 14 V	Ignition switch ON

NOTE:
See NOTE in "ECM TERMINAL VOLTAGE VALUES TABLE" for applicable model.

For TYPE A (See NOTE)

TERMINAL NO.		CIRCUIT	NORMAL VOLTAGE	CONDITION
CONNECTOR "E18"	1	A/C compressor clutch	0 V	Ignition switch ON
	2	Malfunction indicator lamp	10 – 14 V	Engine running
			0 – 1.0 V	Ignition switch ON leaving engine OFF
	3	Data link connector	10 – 14 V	Ignition switch ON
	4	Heater of HO2S-2 (if equipped)	10 – 14 V	Ignition switch ON
	5	Power source	10 – 14 V	Ignition switch ON
	6	Power source	10 – 14 V	Ignition switch ON
	7	Power source for buck-up	10 – 14 V	Ignition switch ON and OFF
	8	Immobilizer indicator lamp (with immobilizer indicator lamp)	10 – 14 V	Engine running
			0 – 1.0 V	Ignition switch ON leaving engine OFF
		Duty output terminal (without immobilizer indicator lamp)	0 – 1.0 V	Ignition switch ON
	9	—	—	—
	10	Main relay	10 – 14 V	Ignition switch OFF
			0.4 – 1.5 V	Ignition switch ON
	11	Tachometer	—	—
	12	Data link connector	4 – 5 V	Ignition switch ON
	13	Heated oxygen sensor-2	Refer to DTC P0130 diag. flow table	
	14	Diag. Switch terminal (without immobilizer indicator lamp)	4 – 5 V	Ignition switch ON
	15	Test switch terminal (without immobilizer indicator lamp)	4 – 5 V	Ignition switch ON
	16	A/C (input) signal	10 – 14 V	Ignition switch ON A/C switch OFF
			0 – 2 V	Ignition switch ON A/C switch ON
	17	Lighting switch	10 – 14 V	Lighting switch ON
			0 – 1.3 V	Lighting switch OFF
	18	A/C condenser fan motor relay (if equipped)	0 – 1.0 V	A/C is operating
			10 – 14 V	A/C is not operating
	19	Fuel pump relay	0 – 1 V	For 2 seconds after ignition switch ON
			10 – 14 V	After the above time
	20	Sensor ground	—	—
	21	Throttle opening signal for TCM (A/T)	Indication deflection repeated 0 V and 10 – 14 V	Ignition switch ON
	22	Fuel level sensor (gauge) (with immobilizer indicator lamp)	0 – 2 V	Ignition switch ON Fuel tank fully filled
			4.5 – 7.5 V	Ignition switch ON Fuel tank emptied
	23	—	—	—
	24	Heater blower switch	0 – 2.0 V	Ignition switch ON and heater blower switch ON
			10 – 14 V	Ignition switch ON and heater blower switch OFF

NOTE:

See NOTE in "ECM TERMINAL VOLTAGE VALUES TABLE" for applicable model.

For TYPE B (See NOTE)

TERMINAL NO.		CIRCUIT	NORMAL VOLTAGE	CONDITION
CONNECTOR "E18"	1	A/C compressor clutch	0 V	Ignition switch ON
	2	—	—	—
	3	—	—	—
	4	—	—	—
	5	Power source	10 – 14 V	Ignition switch ON
	6	Power source	10 – 14 V	Ignition switch ON
	7	Power source for buck-up	10 – 14 V	Ignition switch ON and OFF
	8	Immobilizer indicator lamp (with immobilizer indicator lamp)	10 – 14 V	Engine running
			0 – 1.0 V	Ignition switch ON leaving engine OFF
		Duty output terminal (without immobilizer indicator lamp)	0 – 1.0 V	Ignition switch ON
	9	Ignition switch	10 – 14 V	Ignition switch ON
	10	Main relay	10 – 14 V	Ignition switch OFF
			0.4 – 1.5 V	Ignition switch ON
	11	Ignition switch	10 – 14 V	Ignition switch ON
	12	Rear defogger switch (if equipped)	10 – 14 V	Ignition switch ON and rear defogger switch ON
			0 – 1.3 V	Ignition switch ON and rear defogger switch OFF
	13	—	—	—
	14	Diag. Switch terminal (without immobilizer indicator lamp)	4 – 5 V	Ignition switch ON
	15	Test switch terminal (without immobilizer indicator lamp)	4 – 5 V	Ignition switch ON
	16	A/C (input) signal	10 – 14 V	Ignition switch ON A/C switch OFF
			0 – 2 V	Ignition switch ON A/C switch ON
	17	Lighting switch	10 – 14 V	Lighting switch ON
			0 – 1.3 V	Lighting switch OFF
	18	A/C condenser fan motor relay (if equipped)	0 – 1.0 V	A/C is operating
			10 – 14 V	A/C is not operating
	19	Fuel pump relay	0 – 1 V	For 2 seconds after ignition switch ON
			10 – 14 V	After the above time
	20	Engine start signal	6 – 14 V	While engine cranking
	21	Stop lamp switch	0 V	Ignition switch ON Stop lamp switch OFF
			10 – 14 V	Ignition switch ON Stop lamp switch ON
	22	Vehicle speed sensor	deflect between 0 – 1.6 and 4 – 14 V	Ignition switch ON and rear right wheel turned slowly with rear left wheel locked
	23	—	—	—
	24	—	—	—

NOTE:

See NOTE in "ECM TERMINAL VOLTAGE VALUES TABLE" for applicable model.

For TYPE A (See NOTE)

	TERMINAL NO.	CIRCUIT	NORMAL VOLTAGE	CONDITION
CONNECTOR "E17"	1	—	—	—
	2	R-range signal (A/T)	10 – 14 V	Ignition switch ON and shift select switch in R range
			0 – 1.3 V	Ignition switch ON and shift select switch in other than R range
	3	Blank	—	—
	4	Blank	—	—
	5	Overdrive cut signal (A/T)	0 – 1.0 V	Ignition switch ON and ECT less than 60°C
			10 – 14 V	Ignition switch ON and ECT more than 60°C
	6	D-range idle up signal (A/T)	10 – 14 V	Ignition switch ON and shift select switch in other than P and N range
			0 – 1.6 V	Ignition switch ON and shift select switch in P and N range
	7	Stop lamp switch	0 V	Ignition switch ON Stop lamp switch OFF
			10 – 14 V	Ignition switch ON Stop lamp switch ON
	8	—	—	—
	9	Ignition switch	10 – 14 V	Ignition switch ON
	10	—	—	—
	11	Vehicle speed sensor	deflect between 0 – 1.6 and 4 – 14 V	Ignition switch ON and rear right wheel turned slowly with rear left wheel locked
	12	ABS signal (if equipped)	10 – 14 V	Ignition switch ON
	13	Engine start signal	6 – 14 V	While engine cranking
	14	—	—	—
	15	—	—	—
	16	Rear defogger switch (if equipped)	10 – 14 V	Ignition switch ON and rear defogger switch ON
			0 – 1.3 V	Ignition switch ON and rear defogger switch OFF
	17	A/T failure signal (with immobilizer indicator lamp) (A/T)	—	—

NOTE:
See NOTE in "ECM TERMINAL VOLTAGE VALUES TABLE" for applicable model.

For TYPE B (See NOTE)

TERMINAL NO.		CIRCUIT	NORMAL VOLTAGE	CONDITION
CONNECTOR "E17"	1	A/C evaporator temp. sensor	2.0 – 2.3 V	Ignition switch ON A/C evaporator temp. sensor at 25°C (77°F)
	2	R-range signal (A/T)	10 – 14 V	Ignition switch ON and shift select switch in R range
			0 – 1.3 V	Ignition switch ON and shift select switch in other than R range
	3	Blank	—	—
	4	Blank	—	—
	5	Overdrive cut signal (A/T)	0 – 1.0 V	Ignition switch ON and ECT less than 60°C
			10 – 14 V	Ignition switch ON and ECT more than 60°C
	6	D-range idle up signal (A/T)	10 – 14 V	Ignition switch ON and shift select switch in other than P and N range
			0 – 1.6 V	Ignition switch ON and shift select switch in P and N range
	7	Data link connector	4 – 5 V	Ignition switch ON
	8	—	—	—
	9	Malfunction indicator lamp	10 – 14 V	Engine running
			0 – 1.0 V	Ignition switch ON leaving engine OFF
	10	—	—	—
	11	Data link connector	10 – 14 V	Ignition switch ON
	12	ABS signal (if equipped)	10 – 14 V	Ignition switch ON
	13	Heater blower switch	0 – 2.0 V	Ignition switch ON and heater blower switch ON
			10 – 14 V	Ignition switch ON and heater blower switch OFF
	14	Sensor ground	—	—
	15	Throttle opening signal for TCM (A/T)	Indication deflection repeated 0 V and 10 – 14 V	Ignition switch ON
	16	Tachometer	—	—
	17	—	—	—

NOTE:

See NOTE in "ECM TERMINAL VOLTAGE VALUES TABLE" for applicable model.

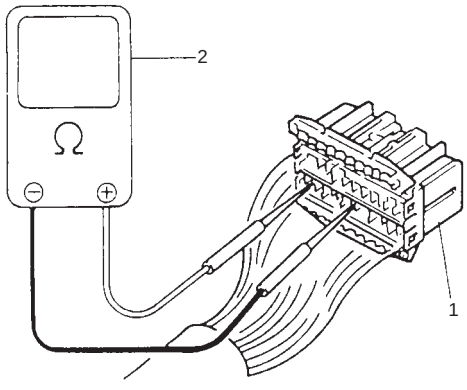

1. ECM coupler disconnected
2. Ohmmeter

RESISTANCE CHECK

1) Disconnect ECM couplers from ECM with ignition switch OFF.

CAUTION:
Never touch terminals of ECM itself or connect voltmeter or ohmmeter.

2) Check resistance between each terminal of couplers disconnected.

CAUTION:
- **Be sure to connect ohmmeter probe from wire harness side of coupler.**
- **Be sure to turn OFF ignition switch for this check.**
- **Resistance in table below represents that when parts temperature is 20°C (68°F).**

TERMINALS	CIRCUIT	STANDARD RESISTANCE
E19-7 to E17-9 (For TYPE A) (See NOTE) E19-7 to E18-11 (For TYPE B) (See NOTE)	HO2S-1 heater	5 – 6.4 Ω
E18-4 to E17-9 (For TYPE A) (See NOTE)	HO2S-2 heater	11.7 – 14.3 Ω
E19-9 to E19-2	No.1 injector	12.0 – 13.0 Ω
E19-21 to E19-2	No.2 injector	12.0 – 13.0 Ω
E19-31 to E19-2	No.3 injector	12.0 – 13.0 Ω
E19-8 to E19-2	No.4 injector	12.0 – 13.0 Ω
E19-28 to E19-2	EGR valve (stepper motor coil 4)	20 – 24 Ω
E19-17 to E19-2	EGR valve (stepper motor coil 3)	20 – 24 Ω
E19-29 to E19-2	EGR valve (stepper motor coil 2)	20 – 24 Ω
E19-18 to E19-2	EGR valve (stepper motor coil 1)	20 – 24 Ω
E19-4 to E19-2	EVAP canister purge valve	30 – 34 Ω
E18-19 to E17-9 (For TYPE A) (See NOTE) E18-19 to E18-11 (For TYPE B) (See NOTE)	Fuel pump relay	70 – 110 Ω
E18-1 to Body ground	A/C compressor clutch	3 – 4.5 Ω
E18-18 to E19-2	A/C condenser fan control relay	70 – 110 Ω
E18-10 to E18-7	Main relay	70 – 110 Ω
E19-1 to Body ground	Ground	Continuity
E19-2 to Body ground	Ground	Continuity
E19-3 to Body ground	Ground	Continuity

NOTE:
For TYPE A and TYPE B, refer to the NOTE in "ECM TERMINAL VOLTAGE VALUES TABLE" for applicable model.

COMPONENT LOCATION

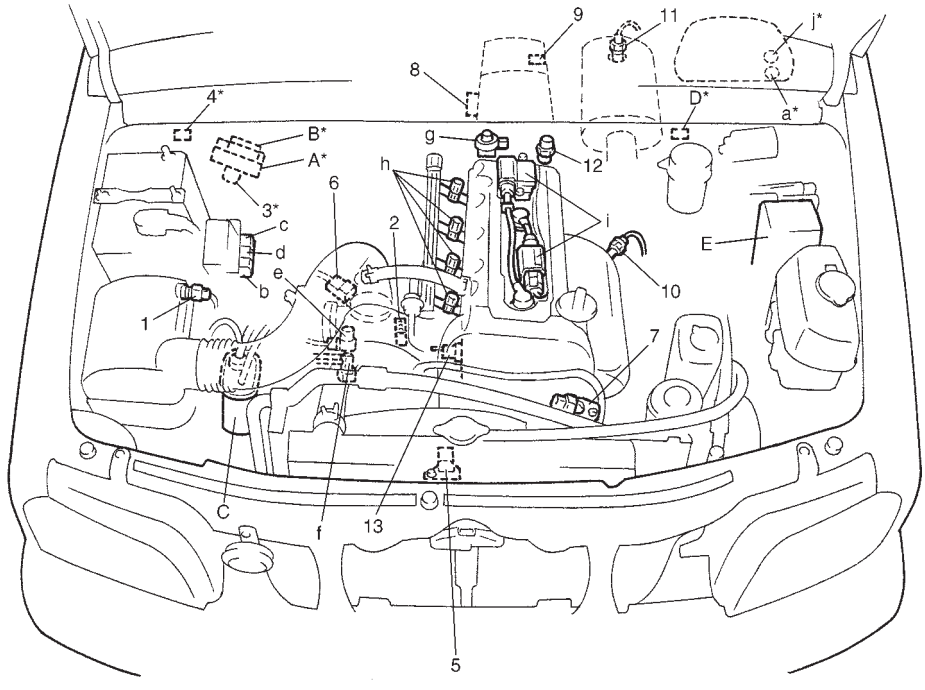

1. IAT sensor
2. TP sensor
3. Monitor connector
4. CO adjusting resistor (if equipped)
5. CKP sensor
6. MAP sensor
7. CMP sensor
8. Transmission range switch
9. VSS
10. HO2S-1 (if equipped)
11. HO2S-2 (if equipped)
12. ECT sensor
13. Knock sensor

a: Immobilizer indicator lamp (if equipped)
b: A/C condenser fan motor relay (if equipped)
c: Main relay
d: Fuel pump relay
e: IAC valve
f: EVAP canister purge valve
g: EGR valve (if equipped)
h: Fuel injector
i: Ignition coil assemblies
j: MIL

A: ECM
B: A/T control module
C: EVAP canister
D: DLC
E: ABS control module (if equipped)

NOTE:
Above figure shows left-hand steering vehicle. For right-hand steering vehicle, parts with (*) are installed at the other side.

TABLE A-1 MALFUNCTION INDICATOR LAMP CIRCUIT CHECK – LAMP DOES NOT COME "ON" AT IGNITION SWITCH ON (BUT ENGINE AT STOP)

CIRCUIT DESCRIPTION

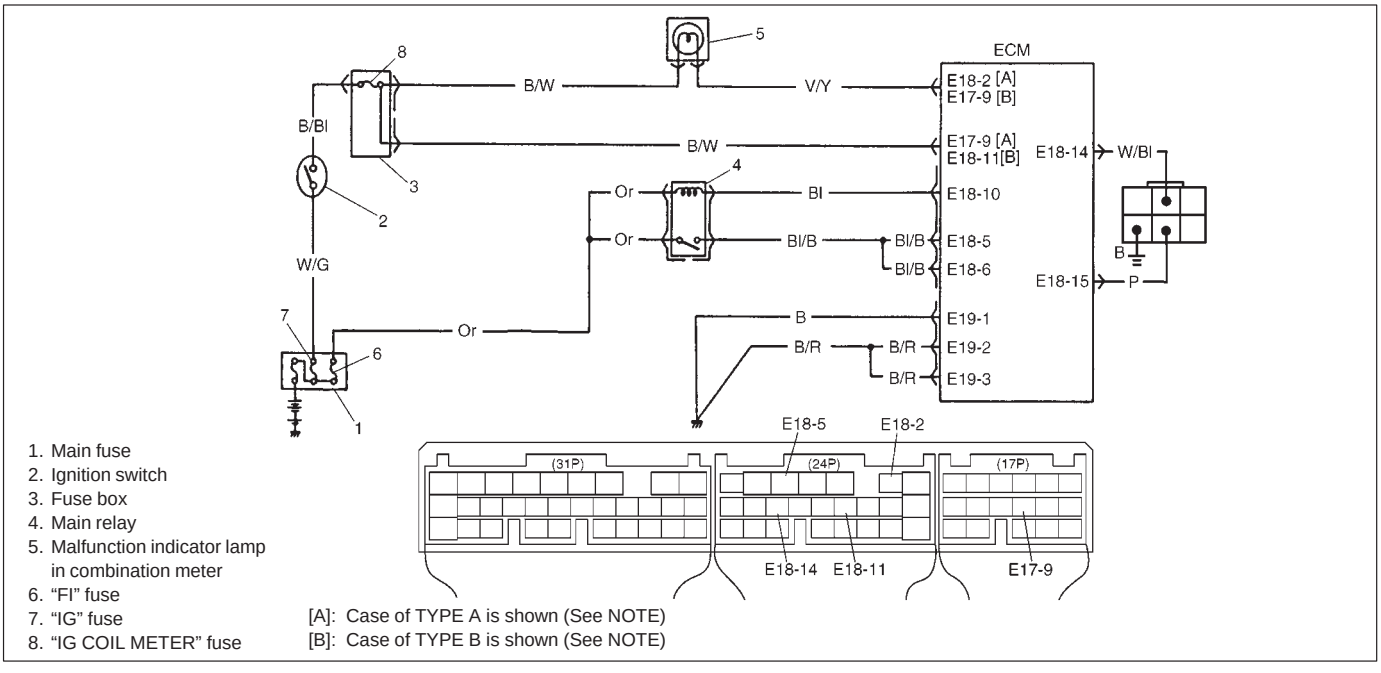

NOTE:
For TYPE A and TYPE B, refer to the NOTE in "ECM TERMINAL VOLTAGE VALUES TABLE" for applicable model.

When the ignition switch is turned ON, ECM causes the main relay to turn ON (close the contact point). Then, ECM being supplied with the main power, turns ON the malfunction indicator lamp (MIL). When the engine starts to run and no malfunction is detected in the system, MIL goes OFF but if a malfunction was or is detected, MIL remains ON even when the engine is running.

INSPECTION

STEP	ACTION	YES	NO
1	MIL Power Supply Check 1) Turn ignition switch ON. Do other indicator/warning lights in combination meter comes ON?	Go to Step 2.	"IG" fuse blown, main fuse blown, ignition switch malfunction, "B/W" circuit between "IG" fuse and combination meter or poor coupler connection at combination meter.
2	ECM Power and Ground Circuit Check Does engine start?	Go to Step 3.	Go to TABLE A-3 ECM POWER AND GROUND CIRCUIT CHECK. If engine is not cranked, go to DIAGNOSIS in SECTION 8G.
3	MIL Circuit Check 1) Turn ignition switch OFF and disconnect connectors from ECM. 2) Check for proper connection to ECM at terminal E18-2 (Case of TYPE A) (See NOTE) or E17-9 (Case of TYPE B) (See NOTE). 3) If OK, then using service wire, ground terminal E18-2 (Case of TYPE A) (See NOTE) or E17-9 (Case of TYPE B) (See NOTE) in connector disconnected. Does MIL turn on at ignition switch ON?	Substitute a known-good ECM and recheck.	Bulb burned out, "V/Y" wire circuit open or "P" wire shorted to ground.

TABLE A-2 MALFUNCTION INDICATOR LAMP CIRCUIT CHECK – LAMP REMAINS "ON" AFTER ENGINE STARTS

WIRING DIAGRAM/CIRCUIT DESCRIPTION – Refer to table A-1.

INSPECTION

STEP	ACTION	YES	NO
1	Diagnostic Trouble Code (DTC) check 1) Check DTC referring to DTC CHECK section. Is there any DTC(s)?	Go to Step 2 of ENGINE DIAG. FLOW TABLE.	Go to Step 2.
2	DTC check Start engine and recheck DTC while engine running. Is there any DTC(s)?		Go to Step 3.
3	MIL Circuit check 1) Turn OFF ignition switch. 2) Disconnect connectors from ECM. Does MIL turn ON at ignition switch ON?	"V/Y" wire circuit shorted to ground.	Substitute a known-good ECM and recheck.

TABLE A-3 MALFUNCTION INDICATOR LAMP CIRCUIT CHECK – MIL FLASHES AT IGNITION SWITCH ON

WIRING DIAGRAM/CIRCUIT DESCRIPTION – Refer to table A-1.

INSPECTION

STEP	ACTION	YES	NO
1	MIL flashing pattern check: 1) With the ignition switch ON position, check MIL flashing pattern. Does MIL flashing pattern indicate DTC (diagnostic trouble code)?	Go to Step 2.	Go to "Diagnosis" in section 8G.
2	Diagnosis switch terminal check: 1) With the ignition switch ON position, check voltage between E18-14 terminal of ECM coupler and ground. Is voltage 4 – 5 V?	Substitute a known-good ECM and recheck.	"W/Bl" wire (diagnosis switch terminal) shorted to ground circuit. If OK, substitute a known-good ECM and recheck.

TABLE A-4 MALFUNCTION INDICATOR LAMP CIRCUIT CHECK – MIL DOES NOT FLASH, JUST REMAINS ON OR JUST REMAINS OFF EVEN WITH GROUNDING DIAGNOSIS SWITCH TERMINAL

WIRING DIAGRAM/CIRCUIT DESCRIPTION – Refer to table A-1.

INSPECTION

STEP	ACTION	YES	NO
1	MIL flashing pattern check: 1) With grounding diagnosis switch terminal and turn the ignition switch ON position, check voltage between E18-14 terminal of ECM connector and ground. Is voltage 0 – 1 V?	Go to Step 2.	"W/Bl" wire (diagnosis switch terminal), "B" wire of monitor connector open. If OK, substitute a known-good ECM and recheck.
2	Test switch terminal circuit check: 1) With the ignition switch ON position, check voltage between E18-15 terminal of ECM connector and ground. Is voltage 4 – 5 V?	Substitute a known-good ECM and recheck.	"P" wire (test switch terminal) shorted to ground circuit. If OK, substitute a known-good ECM and recheck.

TABLE A-5 ECM POWER AND GROUND CIRCUIT CHECK – MIL DOESN'T LIGHT AT IGNITION SWITCH ON AND ENGINE DOESN'T START THOUGH IT IS CRANKED UP

CIRCUIT DESCRIPTION

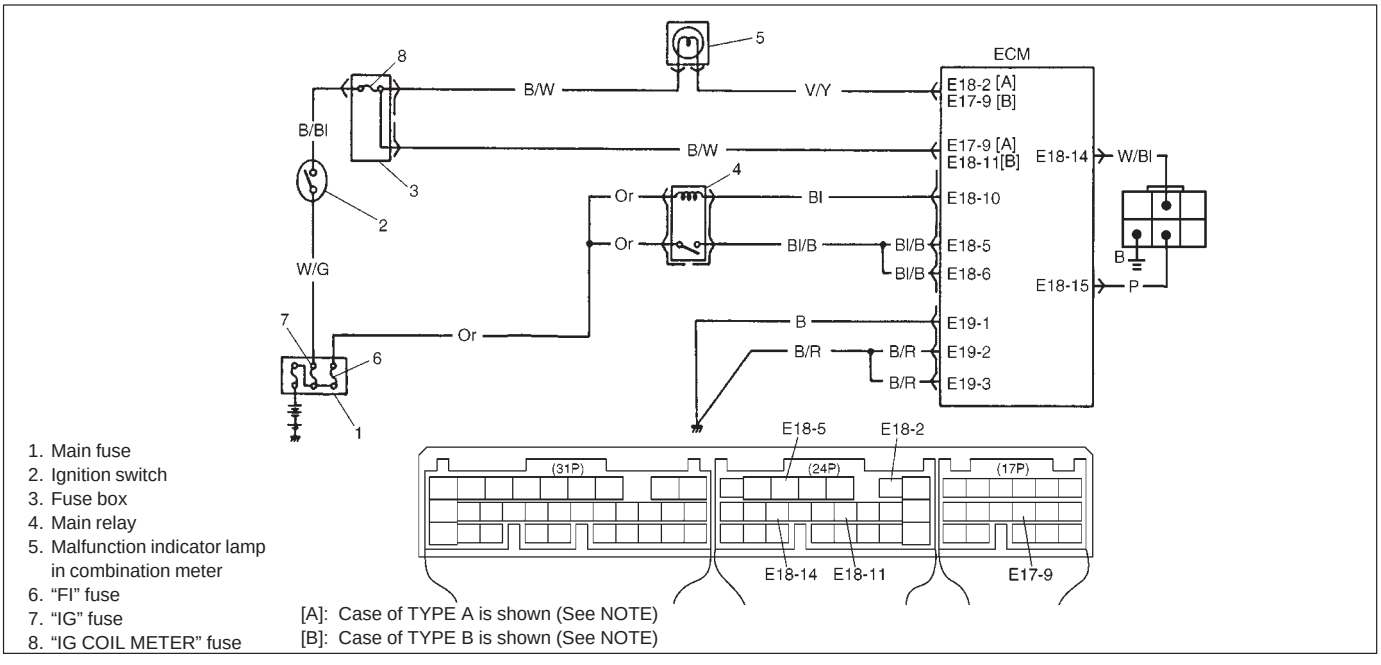

NOTE:
For TYPE A and TYPE B, refer to the NOTE in "ECM TERMINAL VOLTAGE VALUES TABLE" for applicable model.

When the ignition switch tuned ON, the main relay turns ON (the contact point closes) and the main power is supplied to ECM.

INSPECTION

STEP	ACTION	YES	NO
1	Main Relay Operating Sound Check Is operating sound of main relay heard at ignition switch ON?	Go to Step 5.	Go to Step 2.
2	Main Relay Check 1) Turn OFF ignition switch and remove main relay (1). 2) Check for proper connection to main relay (1) at terminal 3 and 4. 3) Check resistance between each two terminals. See Fig. 1 and 2. Between terminals A and B: Infinity Between terminals C and D: 70 – 110 Ω (at 20°C, 68°F) 4) Check that there is continuity between terminals 1 and 2 when battery is connected to terminals 3 and 4. See Fig. 3. Is main relay in good condition?	Go to Step 3.	Replace main relay.
3	Fuse Check Is main "FI" fuse in good condition? See Fig. 1.	Go to Step 4.	Check for short in circuits connected to this fuse.
4	ECM Power Circuit Check 1) Turn OFF ignition switch, disconnect connectors from ECM and install main relay. 2) Check for proper connection to ECM at terminals E17-9 (Case of TYPE A) (See NOTE) or E18-11 (Case of TYPE B) (See NOTE), E18-10, E18-5 and E18-6. 3) If OK, then measure voltage between terminal E18-10 and ground, E17-9 (Case of TYPE A) (See NOTE) or E18-11 (Case of TYPE B) (See NOTE) and ground with ignition switch ON. Is each voltage 10 – 14 V?	Go to Step 5.	"B/W", "Or" or "Bl/B" circuit open.

STEP	ACTION	YES	NO
5	ECM Power Circuit Check 1) Using service wire, ground terminal E18-10 and measure voltage between terminal E18-5 and ground at ignition switch ON. Is it 10 – 14 V?	Check ground circuits “B” and “B/R” for open. If OK, then substitute a known-good ECM and recheck.	Go to Step 6.
6	Is operating sound of main relay heard in Step 1?	Go to Step 7.	“Bl/B” or “B/R” wire open.
7	Main Relay Check 1) Check main relay according to procedure in Step 2. Is main relay in good condition?	“Or” or “Bl/B” wire open.	Replace main relay.

Fig. 1 for Step 2 and 3

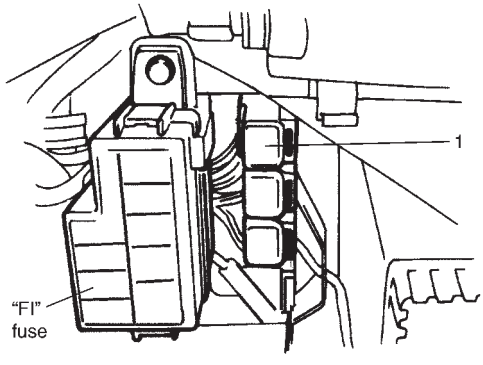

Fig. 2 for Step 2

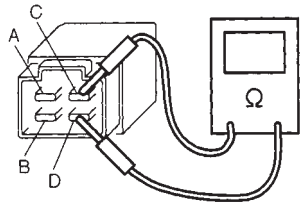

Fig. 3 for Step 2

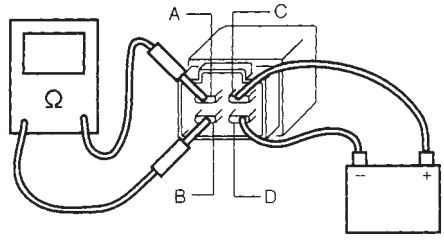

DTC P0105 MANIFOLD ABSOLUTE PRESSURE (MAP) CIRCUIT (DTC No.11) MALFUNCTION

CIRCUIT DESCRIPTION

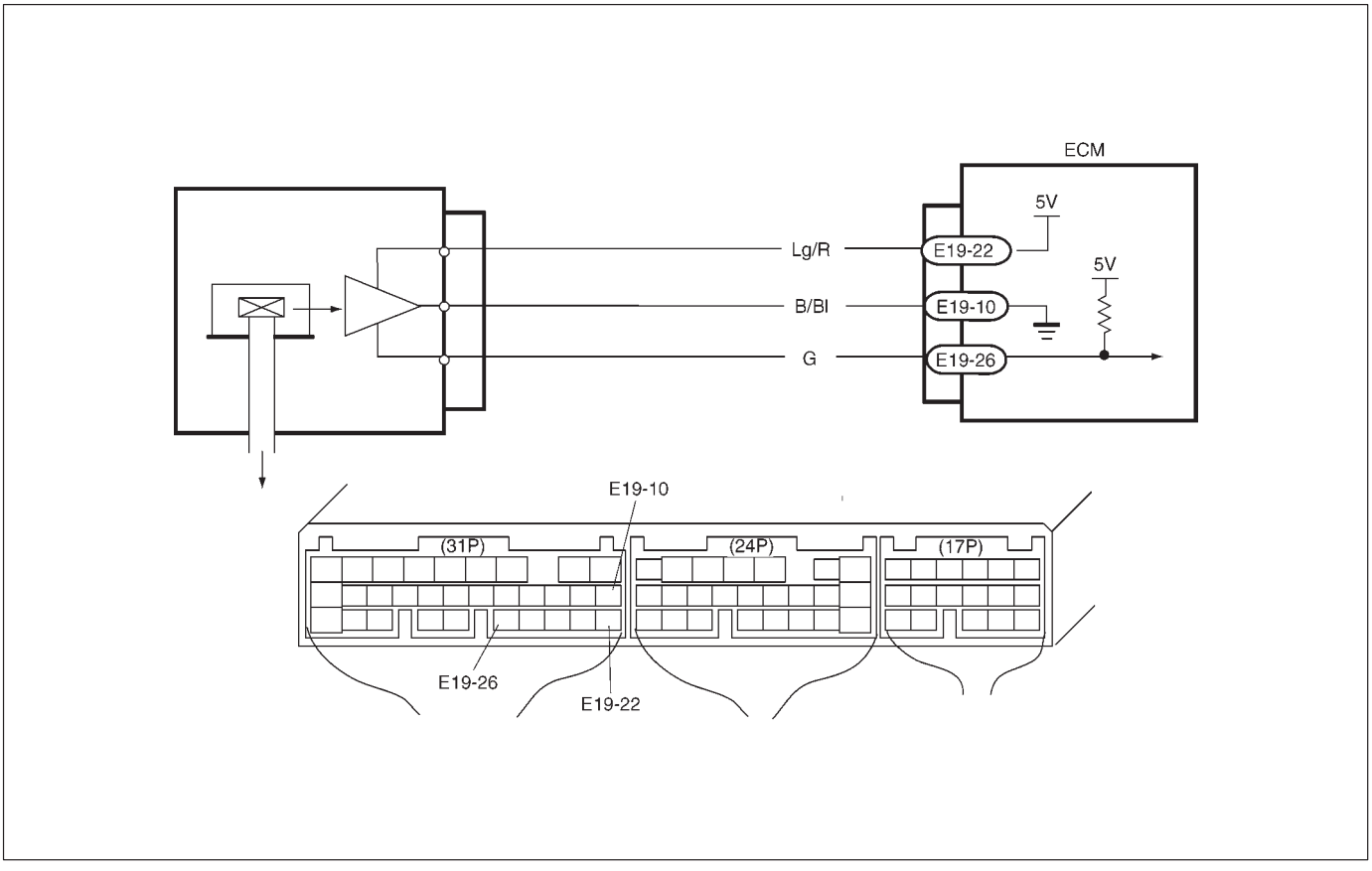

DTC DETECTING CONDITION	POSSIBLE CAUSE
● MAP sensor signal is 0.19 V or lower. (Low pressure – High vacuums – Low voltage) ● MAP sensor signal is 4.5 V or higher. (High pressure – Low vacuums – High voltage)	● "B/Bl" circuit open ● "Lg/R" circuit open or shorted to ground ● "G" circuit open or shorted to ground ● MAP sensor malfunction ● ECM malfunction

NOTE:

- **When DTC P0120 is indicated together, it is possible that "Lg/R" circuit is open.**
- **When DTC P0105 (No.11), P0110 (No.18) P0115 (No.19) P0120 (No.13) and P0460 are indicated together, it is possible that "B/Bl" circuit is open.**

DTC CONFIRMATION PROCEDURE

1) Clear DTC, start engine and keep it at idle for 1 min.
2) Select "DTC" mode on scan tool and check DTC.

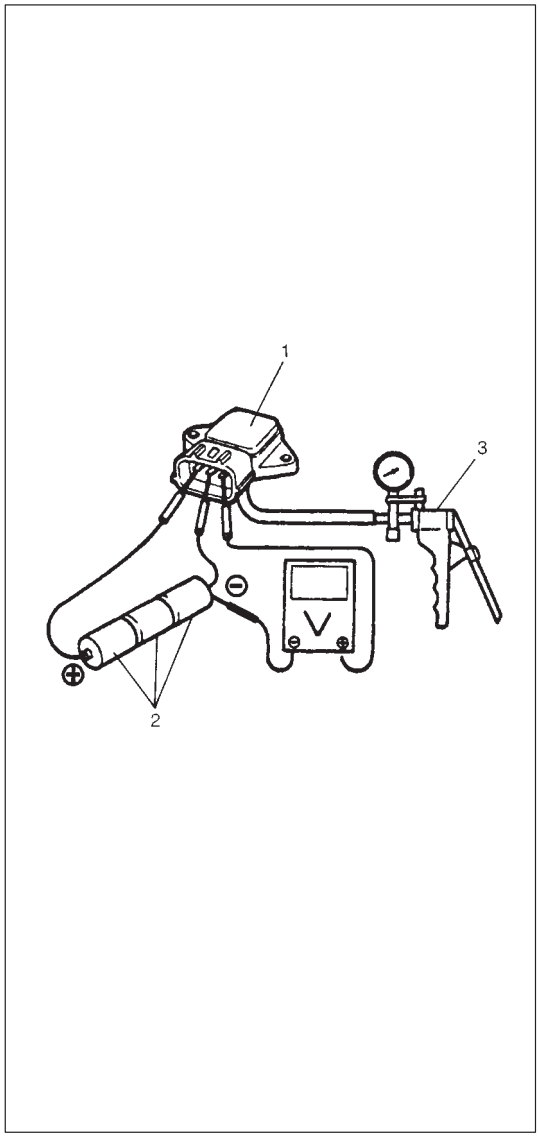

MAP Sensor Individual Check

1) Disconnect connector from MAP sensor (1).
2) Remove MAP sensor (1).
3) Arrange 3 new 1.5 V batteries (2) in series (check that total voltage is 4.5 – 5.0 V) and connect its positive terminal to "Vin" terminal of sensor and negative terminal to "Ground" terminal. Then check voltage between "Vout" and "Ground".
   Also, check if voltage reduces when vacuum is applied up to 400 mmHg by using vacuum pump (3).

   Output voltage (When input voltage is 4.5 – 5.5 V, ambient temp. 20 – 30°C, 68 – 86°F)

ALTITUDE (Reference)		BAROMETRIC PRESSURE		OUTPUT VOLTAGE
(ft)	(m)	(mmHg)	(kPa)	(V)
0 | 2 000	0 | 610	760 | 707	100 | 94	3.3 – 4.3
2 001 | 5 000	611 | 1 524	Under 707 over 634	94 | 85	3.0 – 4.1
5 001 | 8 000	1 525 | 2 438	Under 634 over 567	85 | 76	2.7 – 3.7
8 001 | 10 000	2 439 | 3 048	Under 567 over 526	76 | 70	2.5 – 3.3

   If check result is not satisfactory, replace MAP sensor (1).

4) Install MAP sensor (1) securely.
5) Connect MAP sensor (1) connector securely.

INSPECTION

STEP	ACTION	YES	NO
1	Was “ENGINE DIAG. FLOW TABLE” performed?	Go to Step 2.	Go to “ENGINE DIAG. FLOW TABLE”.
2	Check MAP Sensor and Its Circuit. 1) Connect scan tool to DLC with ignition switch OFF. 2) Turn ignition switch ON. 3) Check intake manifold pressure. See Fig. 1. Is it 126 kPa (37.2 inHg) or 0 kPa (0 inHg)?	Go to Step 3.	Intermittent trouble. Check for intermittent referring to “INTERMITTENT AND POOR CONNECTION” in Section 0A.
3	Check Wire Harness. 1) Disconnect MAP sensor connector with ignition switch OFF. 2) Check for proper connection of MAP sensor at “G” and “B/Bl” wire terminals. 3) If OK, then with ignition switch ON, check voltage at each of “Lg/R” and “G” wire terminals and body ground. See Fig. 2. Is voltage about 4 – 6 V at each terminal?	Go to Step 4.	“Lg/R” wire open or shorted to ground circuit or shorted to power circuit, “G” wire open or shorted to ground, poor E19-26 connection or E19-22 connection. If wire and connection are OK, confirm that MAP sensor is normal and then substitute a known-good ECM and recheck. **NOTE: When battery voltage is applied to “Lg/R” wire, it is possible that MAP sensor is also faulty.**
4	Check MAP sensor according to “MAP Sensor Individual Check” below. Is it in good condition?	“Lg/R” wire shorted to “G” wire, “B/Bl” wire open, poor E19-10 connection. If wire and connection are OK, substitute a known-good ECM and recheck.	Replace MAP sensor.

Fig. 1 for Step 2

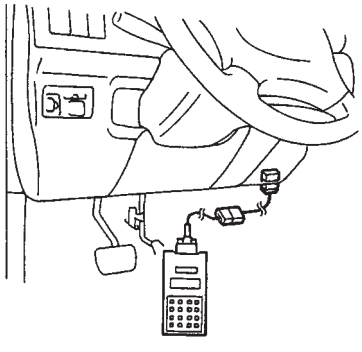

Fig. 2 for Step 3

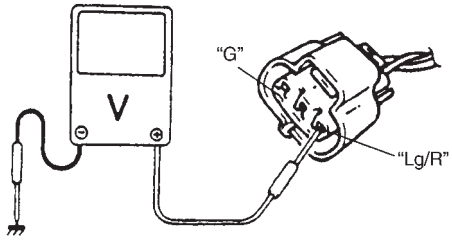

DTC P0110 (DTC No.18) INTAKE AIR TEMP. (IAT) CIRCUIT MALFUNCTION

CIRCUIT DESCRIPTION

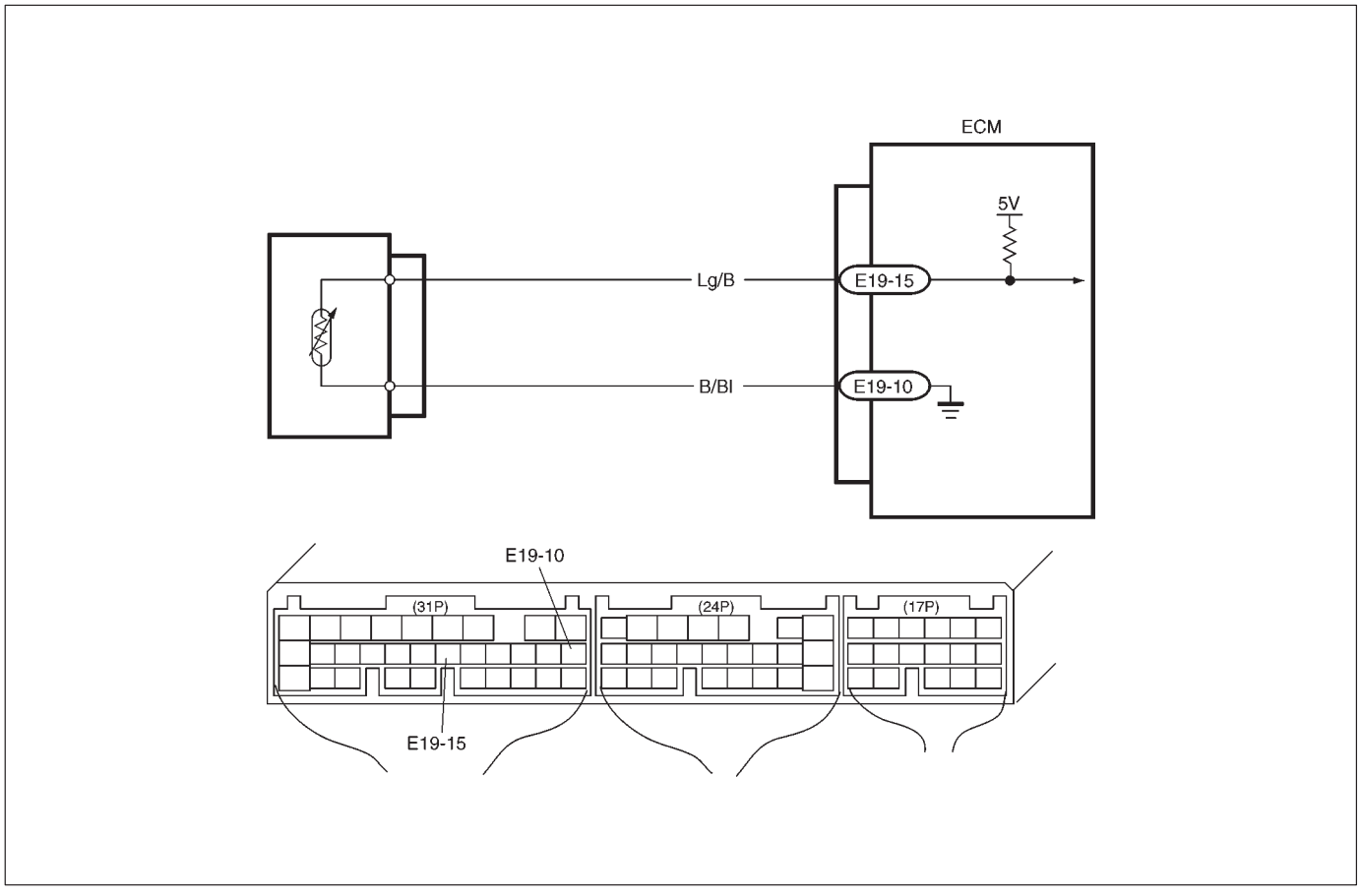

DTC DETECTING CONDITION	POSSIBLE CAUSE
● Low intake air temperature (High voltage-High resistance) ● High intake air temperature (Low voltage-Low resistance)	● "Lg/R" circuit open or shorted to power. ● "B/Bl" circuit open ● IAT sensor malfunction ● ECM malfunction

NOTE:

- **When DTC P0105 (No.11), P0110 (No.18), P046, P0115 (No.19) and P0120 (No.13) are indicated together, it is possible that "B/Bl" circuit is open.**
- **Before inspecting, be sure to check that ambient temperature is higher than –40°C (–40°F).**

DTC CONFIRMATION PROCEDURE

1) Clear DTC, start engine and keep it at idle for 1 min.
2) Select "DTC" mode no scan tool and check DTC.

INSPECTION

STEP	ACTION	YES	NO
1	Was “ENGINE DIAG. FLOW TABLE” performed?	Go to Step 2.	Go to “ENGINE DIAG. FLOW TABLE”.
2	Check IAT Sensor and Its Circuit. 1) Connect scan tool to DLC with ignition switch OFF. 2) Turn ignition switch ON. 3) Check intake air temp. displayed on scan tool. See Fig. 1. Is –40°C (–40°F) or 119°C (246°F) indicated?	Go to Step 3.	Intermittent trouble. Check for intermittent referring to “Intermittent and Poor Connection” in Section 0A.
3	Check Wire Harness. 1) Disconnect IAT sensor connector with ignition switch OFF. 2) Check for proper connection to IAT sensor at “Lg/B” and “B/Bl” wire terminals. 3) If OK, then with ignition switch ON, is voltage applied to “Lg/B” wire terminal about 4 – 6 V? See Fig. 2.	Go to Step 5.	“Lg/B” wire open or shorted to power, or poor E19-15 connection. If wire and connection are OK, substitute a known-good ECM and recheck.
4	Does scan tool indicate –40°C (–40°F) at Step 2.	Go to Step 6.	Go to Step 5.
5	Check Wire Harness 1) Check intake air temp. displayed on scan tool with ignition switch ON. Is –40°C (–40°F) indicated?	Replace IAT sensor.	“Lg/B” wire shorted to ground. If wire is OK, substitute a known-good ECM and recheck.
6	Check Wire Harness. 1) Using service wire, connect IAT sensor connector terminals. 2) Check intake air temp. displayed on scan tool with ignition switch ON. See Fig. 3. Is 119°C (246°F) indicated?	Replace IAT sensor.	“Lg/B” wire open or poor E19-10 connection. If wire and connection are OK, substitute a known-good ECM and recheck.

Fig. 1 for Step 2

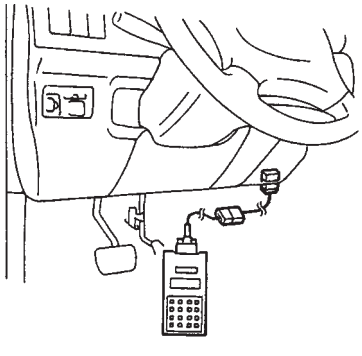

Fig. 2 for Step 3

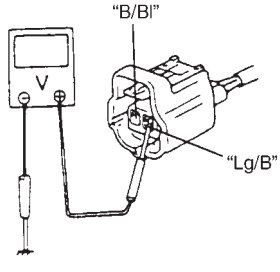

Fig. 3 for Step 6

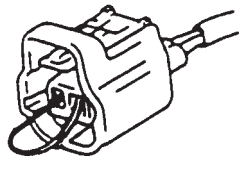

DTC P0115 ENGINE COOLANT TEMPERATURE (ECT) CIRCUIT (DTC No.19) MALFUNCTION

CIRCUIT DESCRIPTION

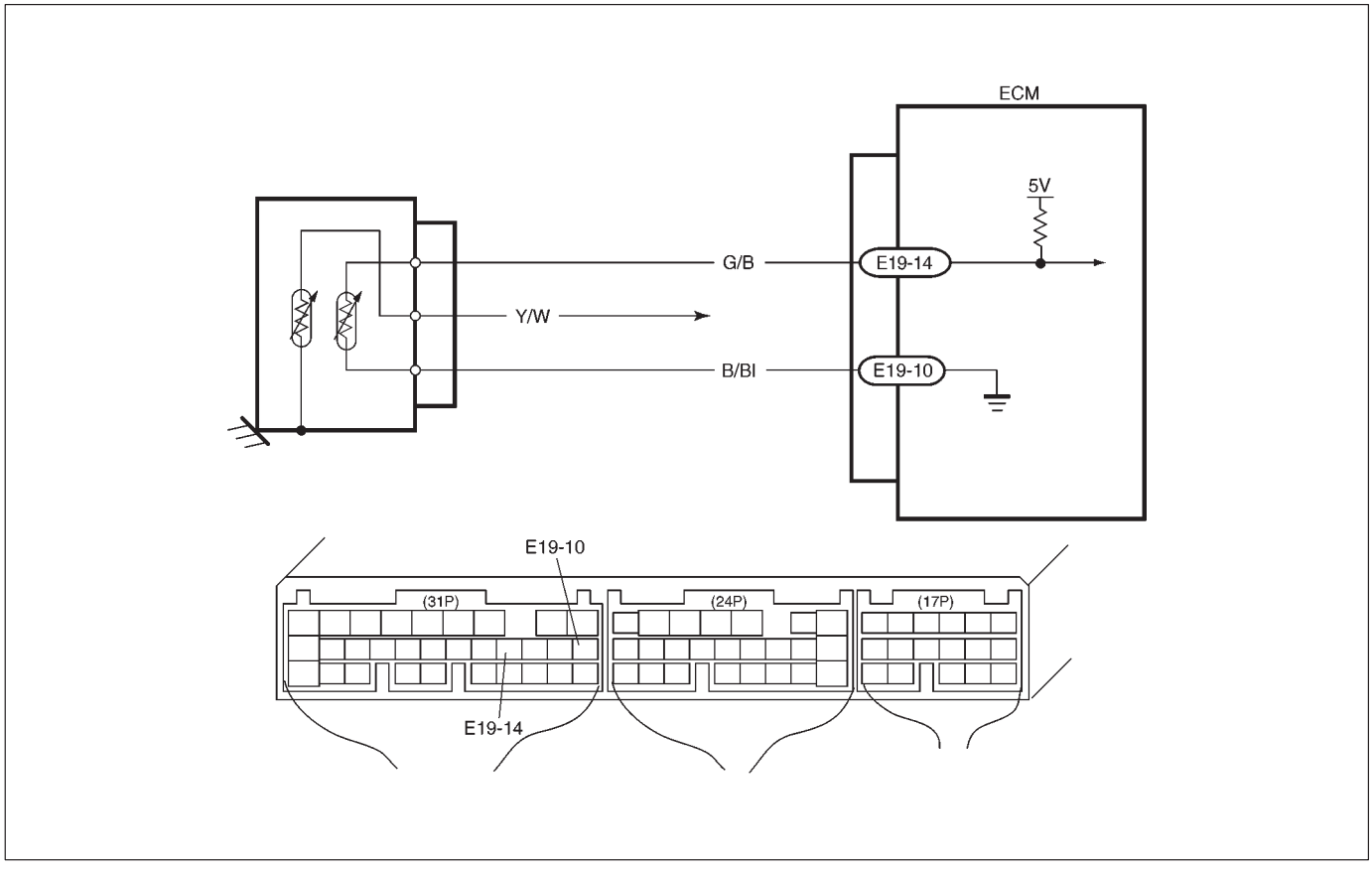

DTC DETECTING CONDITION	POSSIBLE CAUSE
● Low engine coolant temperature (High voltage-High resistance) ● High engine coolant temperature (Low voltage-Low resistance)	● "G/B" circuit open or shorted to power ● "B/Bl" circuit open ● ECT sensor malfunction ● ECM malfunction

NOTE:

- **When DTC P0105 (No.11), P0110 (No.18), P0115 (No.19), P0120 (No.13) and P0460 are indicated together, it is possible that "B/Bl" circuit is open.**
- **Before inspecting, be sure to check that coolant temp. meter in combination meter indicates normal operating temperature (Engine is not overheating).**
- **When this DTC and P1709 are stored together, also clear DTC stored in TCM after completion of repair.**

DTC CONFIRMATION PROCEDURE

1) Clear DTC, start engine and keep it at idle for 1 min.
2) Select "DTC" mode on scan tool and check DTC.

INSPECTION

STEP	ACTION	YES	NO
1	Was “ENGINE DIAG. FLOW TABLE” performed?	Go to Step 2.	Go to “ENGINE DIAG. FLOW TABLE”.
2	Check ECT Sensor and Its Circuit. 1) Connect scan tool with ignition switch OFF. 2) Turn ignition switch ON. 3) Check engine coolant temp. displayed on scan tool. See Fig. 1. Is –40°C (–40°F) or 119°C (246°F) indicated?	Go to Step 3.	Intermittent trouble. Check for intermittent referring to “Intermittent and Poor Connection” in Section 0 A.
3	Check Wire Harness. 1) Disconnect ECT sensor connector. 2) Check engine coolant temp. displayed on scan tool. Is –40°C (–40°F) indicated?	Replace ECT sensor.	“G/B” wire shorted to ground. If wire is OK, substitute a known-good ECM and recheck.
4	Does scan tool indicate –40°C (–40°F) at Step 2.	Go to Step 6.	Go to Step 5.
5	Check Wire Harness. 1) Disconnect ECT sensor connector with ignition switch OFF. 2) Check for proper connection to ECT sensor at “B/Bl” and “G/B” wire terminals. 3) If OK, then with ignition switch ON, is voltage applied to “B/Bl” wire terminal about 4 – 6 V? See Fig. 2.	Go to Step 4.	“G/B” wire open or shorted to power, or poor E19-14 connection. If wire and connection are OK, substitute a known-good ECM and recheck.
6	Check Wire Harness. 1) Using service wire, connect ECT sensor connector terminals. See Fig. 3. 2) Turn ignition switch ON and check engine coolant temp. displayed on scan tool. Is 119°C (246°F) indicated?	Replace ECT sensor.	“B/Bl” wire open or poor E19-10 connection. If wire and connection are OK, substitute a known-good ECM and recheck.

Fig. 1 for Step 2

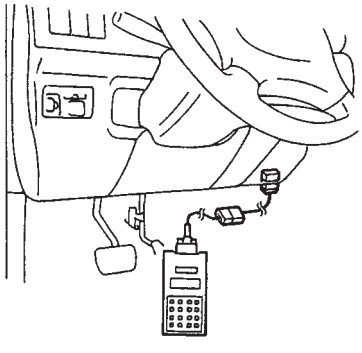

Fig. 2 for Step 3

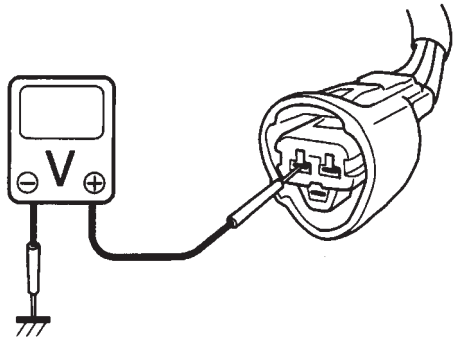

Fig. 3 for Step 6

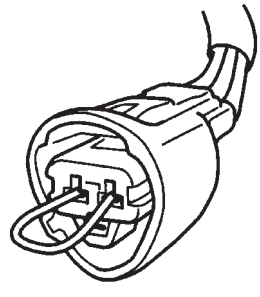

DTC P0120 (DTC No.13) THROTTLE POSITION CIRCUIT MALFUNCTION

CIRCUIT DESCRIPTION

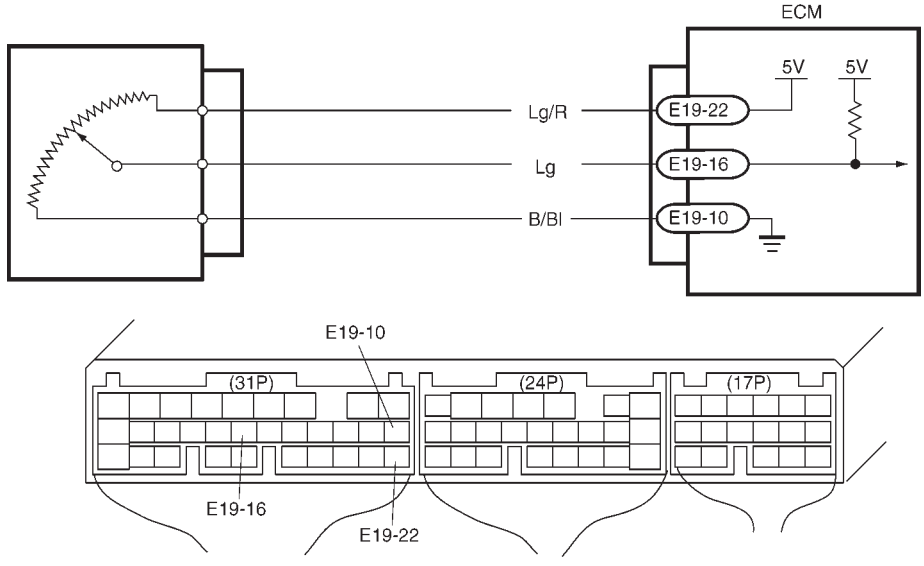

DTC DETECTING CONDITION	POSSIBLE CAUSE
● Signal voltage high ● Signal voltage low	● "B/Bl" circuit open ● "Lg" circuit open or shorted to ground ● "B/Bl" circuit open or shorted to power or ground ● TP sensor malfunction ● ECM malfunction

NOTE:

- **When DTC P0105 (No.11), P0110 (No.18), P0115 (No.19), P0120 (No.13) and/or P0460 are indicated together, it is possible that "B/Bl" or "Lg/R" circuit is open.**
- **When this DTC and P1700 are stored together, also clear DTC stored in TCM after completion of repair.**

DTC CONFIRMATION PROCEDURE

1) Clear DTC, start engine and keep it at idle for 1 min.
2) Select "DTC" mode on scan tool and check DTC.

INSPECTION

STEP	ACTION	YES	NO
1	Was “ENGINE DIAG. FLOW TABLE” performed?	Go to Step 2.	Go to “ENGINE DIAG. FLOW TABLE”.
2	Check TP Sensor and Its Circuit. 1) Connect scan tool to DLC with ignition switch OFF and then turn ignition switch ON. 2) Check throttle valve opening percentage displayed on scan tool. See Fig. 1. Is it displayed 0% or 100%?	Go to Step 3.	Intermittent trouble. Check for intermittent referring to “Intermittent and Poor Connection” in Section 0 A.
3	Check Wire Harness. 1) Disconnect connector from TP sensor with ignition switch OFF. 2) Check for proper connection to TP sensor at “Lg/R”, “Lg” and “B/Bl” wire terminal. 3) If OK, then with ignition switch ON, check voltage at each of “Lg/R” and “Lg” wire terminals and body ground. See Fig. 2. Is voltage about 4 – 6 V at each terminal?	Go to Step 4.	“Lg/R” wire open, “Lg/R” wire shorted to ground circuit or power circuit or “B/Bl” wire, “Lg” wire open or shorted to ground circuit or poor E19-22 or E19-16 connection. If wire and connection are OK, substitute a known-good ECM and recheck.
4	Check TP Sensor. 1) Check resistance between terminals of TP sensor. See Fig. 3. Between 1 and 3: 4.0 – 6.0 kΩ Between 2 and 3: Varying according to throttle valve opening (0.02 – 6.0 kΩ) Are measured values within specifications?	“B/Bl” wire open or poor E19-10 connection. If wire and connection are OK, substitute a known-good ECM and recheck.	Replace TP sensor.

Fig. 1 for Step 2

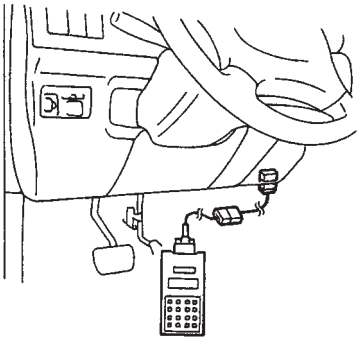

Fig. 2 for Step 3

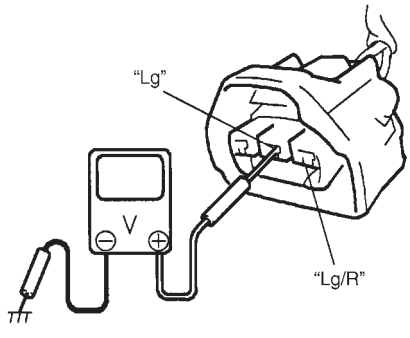

Fig. 3 for Step 4

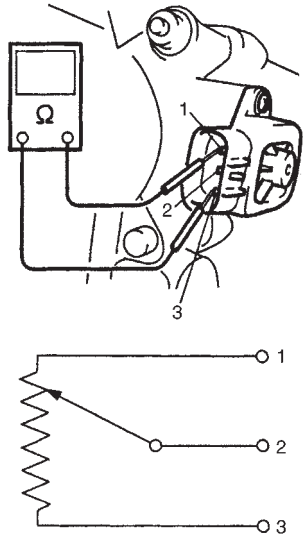

DTC P0121 THROTTLE POSITION CIRCUIT RANGE/PERFORMANCE PROBLEM

WIRING DIAGRAM – Refer to DTC P0120 section.

CIRCUIT DESCRIPTION

DTC DETECTING CONDITION	POSSIBLE CAUSE
● After engine warmed up. ● Difference between actual throttle opening (detected from TP sensor) and opening calculated by ECM (Obtained on the basis of engine speed and intake manifold pressure) in larger than specified value. ⁎ 2 driving cycle detection logic, continuous monitoring	● TP sensor malfunction ● High resistance in the circuit ● ECM malfunction

DTC CONFIRMATION PROCEDURE

WARNING:
- **When performing a road test, select a place where there is no traffic or possibility of a traffic accident and be very careful during testing to avoid occurrence of an accident.**
- **Road test should be carried out with 2 persons, a driver and a tester, on a level road.**

1) Turn ignition switch OFF. Clear DTC with ignition switch ON, check vehicle and environmental condition for:
   – Altitude (barometric pressure): 2400 m, 8000 ft or less (560 mmHg, 75 kPa or more)
   – Ambient temp.: –10°C, 14°F or higher
   – Intake air temp.: 70°C, 158°F or lower
   – Engine coolant temp.: 70°C, 158°F or higher
2) Warm up engine to normal operating temperature.
3) Increase vehicle speed to 30 – 40 mph, 50 – 60 km/h in 3rd gear or “D” range and hold throttle valve at that opening position for 1 min.
4) Stop vehicle.
5) Check DTC in “DTC” mode and pending DTC in “ON BOARD TEST” or “PENDING DTC” mode.

INSPECTION

STEP	ACTION	YES	NO
1	Was “ENGINE DIAG. FLOW TABLE” performed?	Go to Step 2.	Go to “ENGINE DIAG. FLOW TABLE”.
2	Check TP Sensor and Its Circuit. When using SUZUKI scan tool: 1) Turn ignition switch OFF and connect SUZUKI scan tool to DLC. 2) Turn ignition switch ON and check TP sensor output voltage when throttle valve is at idle position and fully opened. See Fig. 1 and 3. Without using SUZUKI scan tool: 1) Turn ignition switch ON. 2) Check voltage at terminal E19-16 of ECM connector connected, when throttle valve is at idle position and fully opened. See Fig. 2 and 3. Dose voltage vary within specified value linearly as shown in figure?	If voltmeter was used, check terminal E19-16 for poor connection. If OK, substitute a known-good ECM and recheck.	Go to Step 3.

STEP	ACTION	YES	NO
3	Check TP Sensor. 1) Turn ignition switch OFF. 2) Disconnect TP sensor connector. 3) Check for proper connection to TP sensor at each terminal. 4) If OK, then measure resistance between terminals and check if each measured value is as specified below. See Fig. 4. Between 1 and 2: 4.0 – 6.0 kΩ Between 1 and 3: 0.02 Ω – 6.0 kΩ, varying according to throttle valve opening. Are measured values as specified?	High resistance in "Lg/R", "Lg" or "B/Bl" circuit. If wire and connection are OK, substitute a known-good ECM and recheck.	Replace TP sensor.

Fig. 1 for Step 2

When using SUZUKI scan tool:

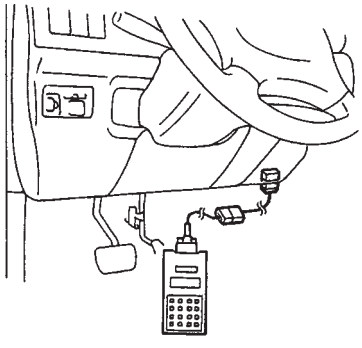

Fig. 2 for Step 2

When not using SUZUKI scan tool:

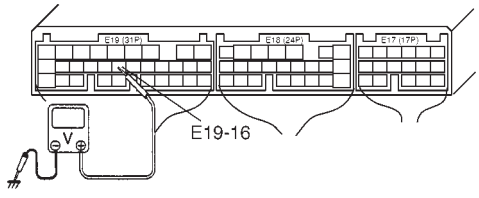

Fig. 3 for Step 2

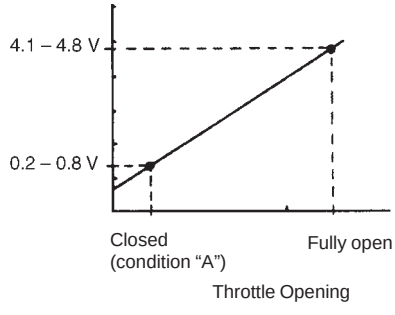

Fig. 4 for Step 3

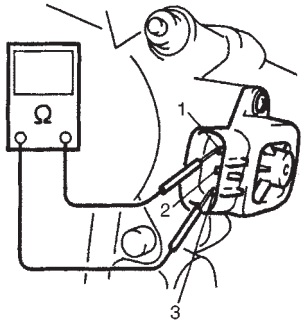

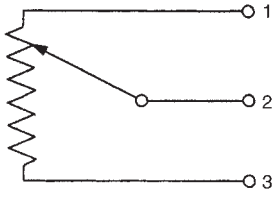

DTC P0130 HEATED OXYGEN SENSOR (HO2S) CIRCUIT MALFUNCTION (DTC No.14) (SENSOR-1)

CIRCUIT DESCRIPTION

1. Heated oxygen sensor-1 (HO2S-1)

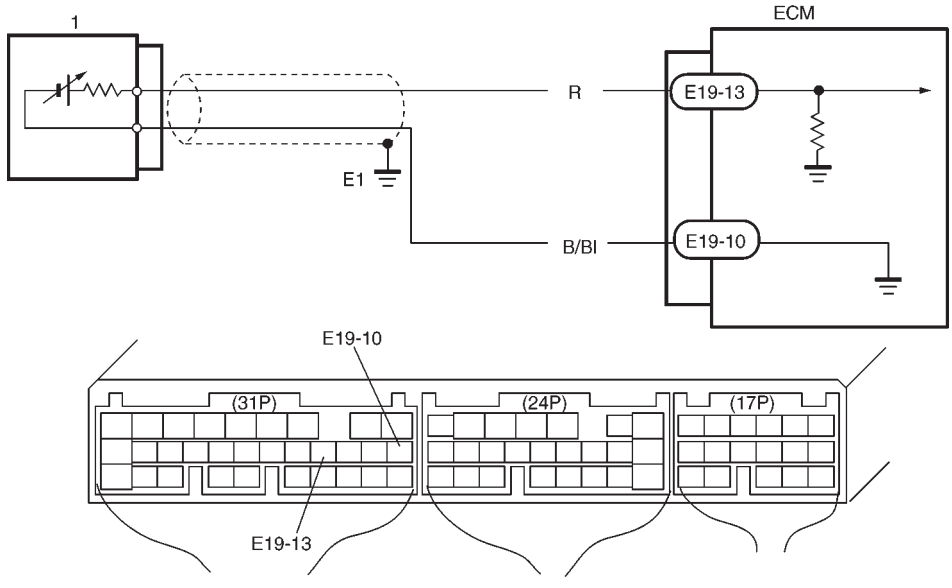

DTC DETECTING CONDITION	POSSIBLE CAUSE
● When running at idle speed after engine warmed up and running at specified vehicle speed, HO2S-1 output voltage does not go below 0.3 V or over 0.6 V. ⁎ 2 driving cycle detection logic, Monitoring once/1 driving.	● Heated oxygen sensor-1 malfunction ● "B/Bl" or "R" circuit open (poor connection) or short

DTC CONFIRMATION PROCEDURE

WARNING:
- **When performing a road test, select a place where there is no traffic or possibility of a traffic accident and be very careful during testing to avoid occurrence of an accident.**
- **Road test should be carried out with 2 persons, a driver and a tester.**

1) Turn ignition switch OFF. Clear DTC with ignition switch ON, check vehicle and environmental condition for:
   – Altitude (barometric pressure): 2400 m, 8000 ft or less (560 mmHg, 75 kPa or more)
   – Ambient temp.: –10°C, 14°F or higher
   – Intake air temp.: 70°C, 158°F or lower
2) Warm up engine to normal operating temperature.
3) Drive vehicle at 30 – 40 mph, 50 – 60 km/h for 2 min.
4) Stop vehicle and run engine at idle for 2 min.
5) Check DTC in "DTC" mode and pending DTC in "ON BOARD TEST" or "PENDING DTC" mode.

INSPECTION

STEP	ACTION	YES	NO
1	Was “ENGINE DIAG. FLOW TABLE” performed?	Go to Step 2.	Go to “ENGINE DIAG. FLOW TABLE”.
2	Is there DTC(s) other than HO2S-1 (DTC P0130)?	Go to applicable DTC Diag. Flow Table.	Go to Step 3.
3	1) Connect scan tool to DLC with ignition switch OFF. 2) Warm up engine to normal operating temperature and keep it at 2000 r/min. for 60 sec. 3) Repeat racing engine (Repeat depressing accelerator pedal 5 to 6 times continuously and take foot off from pedal to enrich and enlean A/F mixture). See Fig. 1 and 2. Does HO2S-1 output voltage deflect between 0.3 V and over 0.6 V repeatedly?	Intermittent trouble. Check for intermittent referring to “Intermittent and Poor Connection” in Section 0A.	Check “R” and “B/Bl” wires for open and short, and connections for poor connection. If wires and connections are OK, replace HO2S-1.

Fig. 1 for Step 3

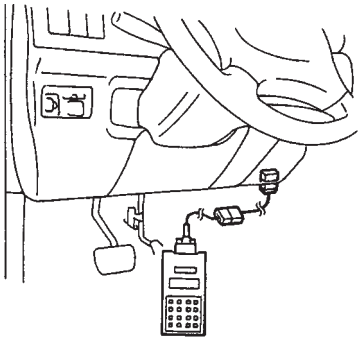

Fig. 2 for Step 3

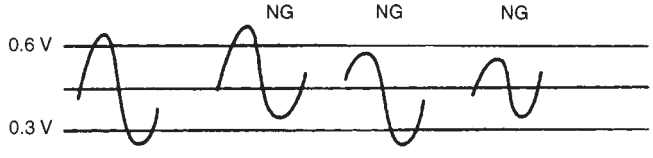

DTC P0133 HEATED OXYGEN SENSOR (HO2S) CIRCUIT SLOW RESPONSE (SENSOR-1)

WIRING DIAGRAM – Refer to DTC P0130 section.

CIRCUIT DESCRIPTION

DTC DETECTING CONDITION	POSSIBLE CAUSE
● When running at specified idle speed after engine warmed up and running at specified vehicle speed, response time (time to change from lean to rich or from rich to lean) of HO2S-1 output voltage is about 1 sec. at minimum or average time of 1 cycle is 5 sec. at minimum. See. Fig. 1 ⁎ 2 driving cycle detection logic, Monitoring once/1 driving.	● Heated oxygen sensor-1 malfunction

Fig. 1

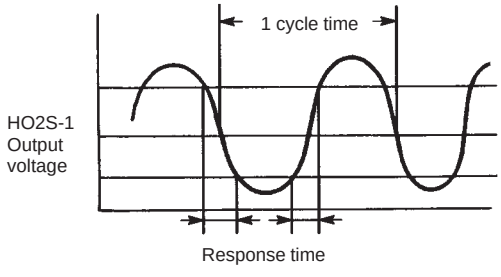

DTC CONFIRMATION PROCEDURE – Refer to DTC P0130 section.

INSPECTION

STEP	ACTION	YES	NO
1	Was “ENGINE DIAG. FLOW TABLE” performed?	Go to Step 2.	Go to “ENGINE DIAG. FLOW TABLE”.
2	Is there DTC(s) other than HO2S-1 (DTC P0133)?	Go to applicable DTC Diag. Flow Table.	Replace HO2S-1.

DTC P0135 HEATED OXYGEN SENSOR (HO2S) HEATER CIRCUIT (DTC No.14) MALFUNCTION (SENSOR-1)

CIRCUIT DESCRIPTION

1. Heated oxygen sensor-1 (HO2S-1) heater

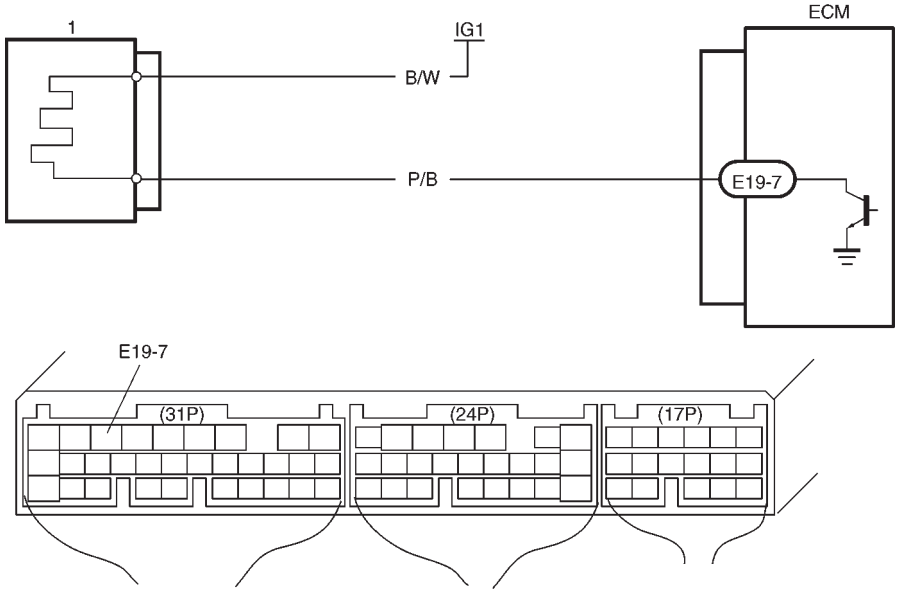

DTC DETECTING CONDITION	POSSIBLE CAUSE
DTC will set when A or B condition is met. A: ● Low voltage at terminal E19-7 when engine is running at high load. B: ● High voltage at terminal E19-7 when engine is running under condition other than above. ⁎ 2 driving cycle detection logic, Continuous monitoring.	● HO2S-1 heater circuit open or shorted to ground ● ECM malfunction

DTC CONFIRMATION PROCEDURE

WARNING:
- **When performing a road test, select a place where there is no traffic or possibility of a traffic accident and be very careful during testing to avoid occurrence of an accident.**
- **Road test should be carried out with 2 persons, a driver and a tester.**

1) Turn ignition switch OFF.
2) Clear DTC with ignition switch ON, start engine and keep it at idle for 1 min.
3) Start vehicle and depress accelerator pedal fully for 5 sec. or longer.
4) Stop vehicle.
5) Check DTC in “DTC” mode and pending DTC in “ON BOARD TEST” or “PENDING DTC” mode.

INSPECTION

STEP	ACTION	YES	NO
1	Was “ENGINE DIAG. FLOW TABLE” performed?	Go to Step 2.	Go t o“ENGINE DIAG. FLOW TABLE”.
2	Check Heater for Operation. 1) Check voltage at terminal E19-7. See Fig. 1. 2) Warm up engine to normal operating temperature. 3) Stop engine. 4) Turn ignition switch ON and Check voltage at terminal E19-7. See Fig. 1. Voltage should be over 10 V. 5) Start engine, run it at idle and check voltage at the same terminal. Voltage should be below 1.9 V. Are check results are specified?	Intermittent trouble Check for intermittent referring to “Intermittent and Poor Connection” in Section 0A.	Go to Step 3.
3	Check Heater of Sensor-1. 1) Disconnect HO2S-1 coupler with ignition switch OFF. 2) Check for proper connection to HO2S-1 at “B/W” and “P/B” wire terminals. 3) If OK, then check heater resistance. See Fig. 2. Is it 5 – 6.4 Ω at 20°C, 68°F?	“P/B” wire open or shorted to ground or poor connection at E19-7. If wire and connection are OK, substitute a known-good ECM and recheck.	Replace HO2S-1.

Fig. 1 for Step 2

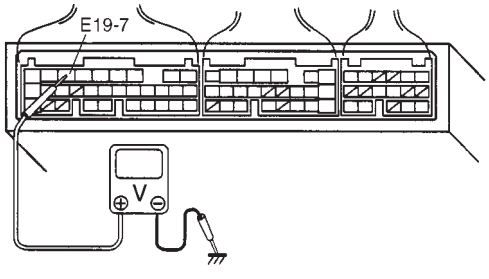

Fig. 2 for Step 3

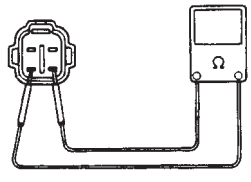

DTC P0136 HEATED OXYGEN SENSOR (HO2S) CIRCUIT MALFUNCTION (SENSOR-2)

CIRCUIT DESCRIPTION

1. Heated oxygen sensor-2 (HO2S-2)

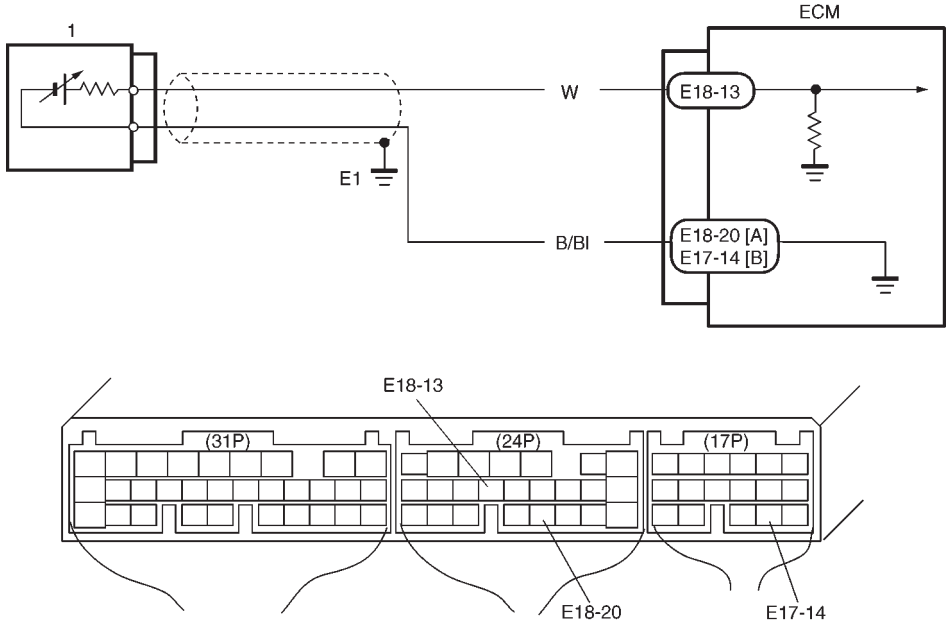

[A]: Case of TYPE A is shown (See NOTE)
[B]: Case of TYPE B is shown (See NOTE)

NOTE:
For TYPE A and TYPE B, refer to the NOTE in "ECM TERMINAL VOLTAGE VALUES TABLE" for applicable model.

DTC DETECTING CONDITION	POSSIBLE CAUSE
Engine is warmed up and HO2S-2 voltage is 4.5 V or more. (circuit open) ∗ 2 driving cycle detection logic, monitoring once/1 driving.	● Exhaust gas leakage ● "W" or "B/Bl" circuit open or short ● Heated oxygen sensor-2 malfunction ● Fuel system malfunction

DTC CONFIRMATION PROCEDURE

WARNING:
- **When performing a road test, select a place where there is no traffic or possibility of a traffic accident and be very careful during testing to avoid occurrence of an accident.**
- **Road test should be carried out with 2 persons, a driver and a tester, on a level road.**

1) Turn ignition switch OFF.
   Clear DTC with ignition switch ON, check vehicle and environmental condition for:
   – Altitude (barometric pressure): 2400 m, 8000 ft or less (560 mmHg, 75 kPa or more)
   – Ambient temp.: –10°C, 14°F or higher
   – Intake air temp.: 70°C, 158°F or lower
   – No exhaust gas leakage and loose connection
2) Warm up engine to normal operating temperature.
3) Drive vehicle under usual driving condition for 5 min. and check HO2S-2 output voltage and “short term fuel trim” with “Data List” mode on scan tool, and write it down.
4) Stop vehicle (don’t turn ignition switch OFF).
5) Increase vehicle speed to higher than 20 mph, 32 km/h and then stop vehicle.
6) Repeat above steps 5) 4 times.
7) Increase vehicle speed to about 50 mph (80 km/h) in 3rd gear or 2 range.
8) Release accelerator pedal and with engine brake applied, keep vehicle coasting (fuel cut condition) for 10sec. or more.
9) Stop vehicle (don’t turn ignition switch OFF) and run engine at idle for 2 min.
   After this step 9), if “Oxygen Sensor Monitoring TEST COMPLETED” is displayed in “READINESS TESTS” mode and DTC is not displayed in “DTC” mode, confirmation test is completed.
   If “TEST NOT COMPLTD” is still being displayed, proceed to next step 10).
10) Drive vehicle under usual driving condition for 10 min. (or vehicle is at a stop and run engine at idle for 10 min. or longer)
11) Stop vehicle (don’t turn ignition switch OFF). Confirm test results according to “Test Result Confirmation Flow Table” in “DTC CONFIRMATION PROCEDURE” of DTC P0420.

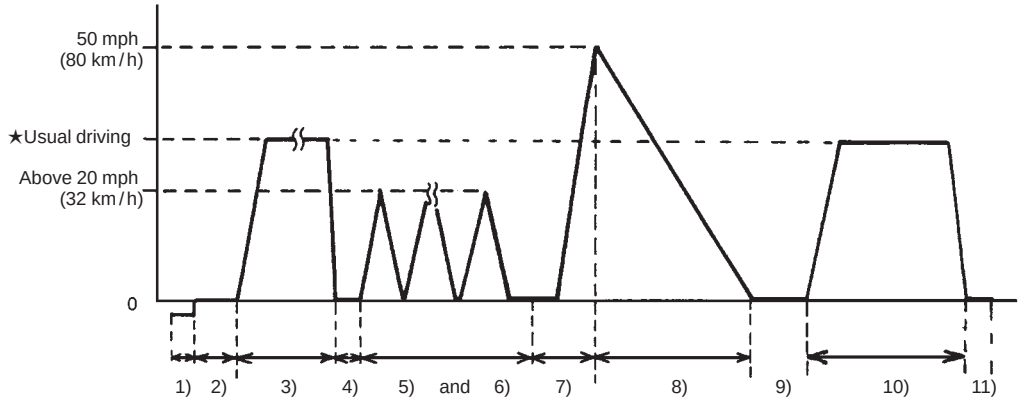

★Usual driving: Driving at 30 – 40 mph, 50 – 60 km/h including short stop according to traffic signal. (under driving condition other than high-load, high-engine speed, rapid accelerating and decelerating)

INSPECTION

STEP	ACTION	YES	NO
1	Was “ENGINE DIAG. FLOW TABLE” performed?	Go to Step 2.	Go to “ENGINE DIAG. FLOW TABLE”.
2	Check exhaust system for leakage, loose connection and damage. Is it good condition?	Go to Step 3.	Repair or replace.
3	Check HO2S-2 and Its Circuit. Was HO2S-2 output voltage indicated on scan tool in step 3) of DTC confirmation test less than 1.275 V?	Go to Step 4.	“B/Bl” or “W” circuit open or HO2S-2 malfunction.
4	Check Short Term Fuel Trim. Did short term fuel trim very within –20 – +20% range in step 3) of DTC confirmation test?	Check “W” and “B/Bl” wire for open and short, and connection for poor connection. If wire and connection are OK, replace HO2S-2.	Check fuel system. Go to DTC P0171/P0172 Diag. Flow Table.

DTC P0141 HEATED OXYGEN SENSOR (HO2S) HEATER CIRCUIT MALFUNCTION (SENSOR-2)

CIRCUIT DESCRIPTION

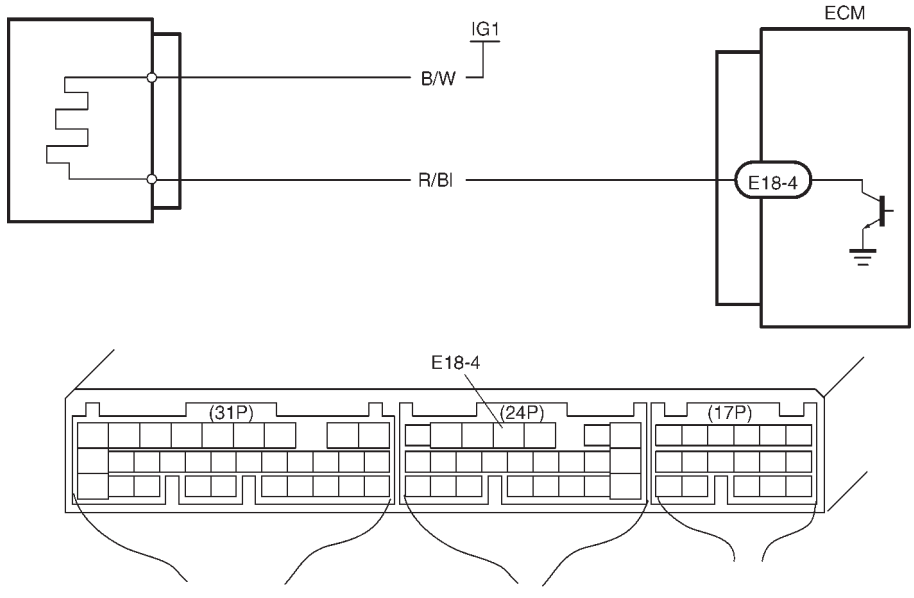

DTC DETECTING CONDITION	POSSIBLE CAUSE
DTC will set when A or B condition it met. A. Low voltage at terminal E18-4 for specified time after engine start or while engine running at high load. B. High voltage at terminal E18-4 while engine running under other than above condition. ⁎ 2 driving cycle detection logic, continuous monitoring.	● HO2S-2 heater circuit open or shorted to ground ● ECM malfunction

DTC CONFIRMATION PROCEDURE

1) Turn ignition switch OFF once and then ON.
2) Clear DTC, start engine and warm up engine to normal operating temperature.
3) Keep it at 2000 r/min for 2 min.
4) Check pending DTC in “ON BOARD TEST” or “PENDING DTC” mode and DTC in “DTC” mode.

INSPECTION

STEP	ACTION	YES	NO
1	Was “ENGINE DIAG. FLOW TABLE” performed?	Go to Step 2.	Go to “ENGINE DIAG. FLOW TABLE”.
2	Check HO2S-2 Heater and Its Circuit. 1) Warm up engine to normal operating temperature. 2) Stop engine. 3) Turn ignition switch ON and check voltage at terminal E18-4 See Fig. 1. Voltage should be over 10 V. 4) Start engine, run it at idle and check voltage at the same terminal after 1 min. from engine start. Voltage should be below 1.9 V. Are check result as specified?	Intermittent trouble. Check for intermittent referring to “Intermittent and Poor Connection” in Section 0A.	Go to Step 3.
3	Check Heater or Sensor-2. 1) Disconnect HO2S-2 coupler with ignition switch OFF. 2) Check for proper connection to HO2S-2 at “B/W” and “R/Bl” wire terminals. 3) If OK, then check heater for resistance. Is it 11.7 – 14.3 Ω at 20°C, 68°F?	“R/Bl” wire open or shorted to ground or poor connection at E18-4. If wire and connection are OK, substitute a known-good ECM and recheck.	Replace HO2S-2.

Fig. 1 for Step 2

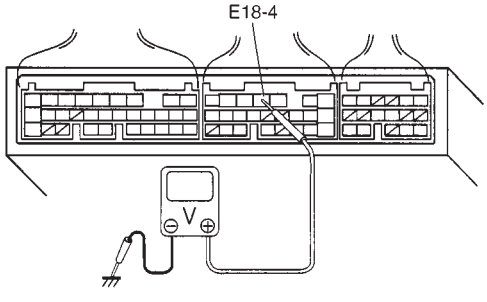

DTC P0171 FUEL SYSTEM TOO LEAN
DTC P0172 FUEL SYSTEM TOO RICH

CIRCUIT DESCRIPTION

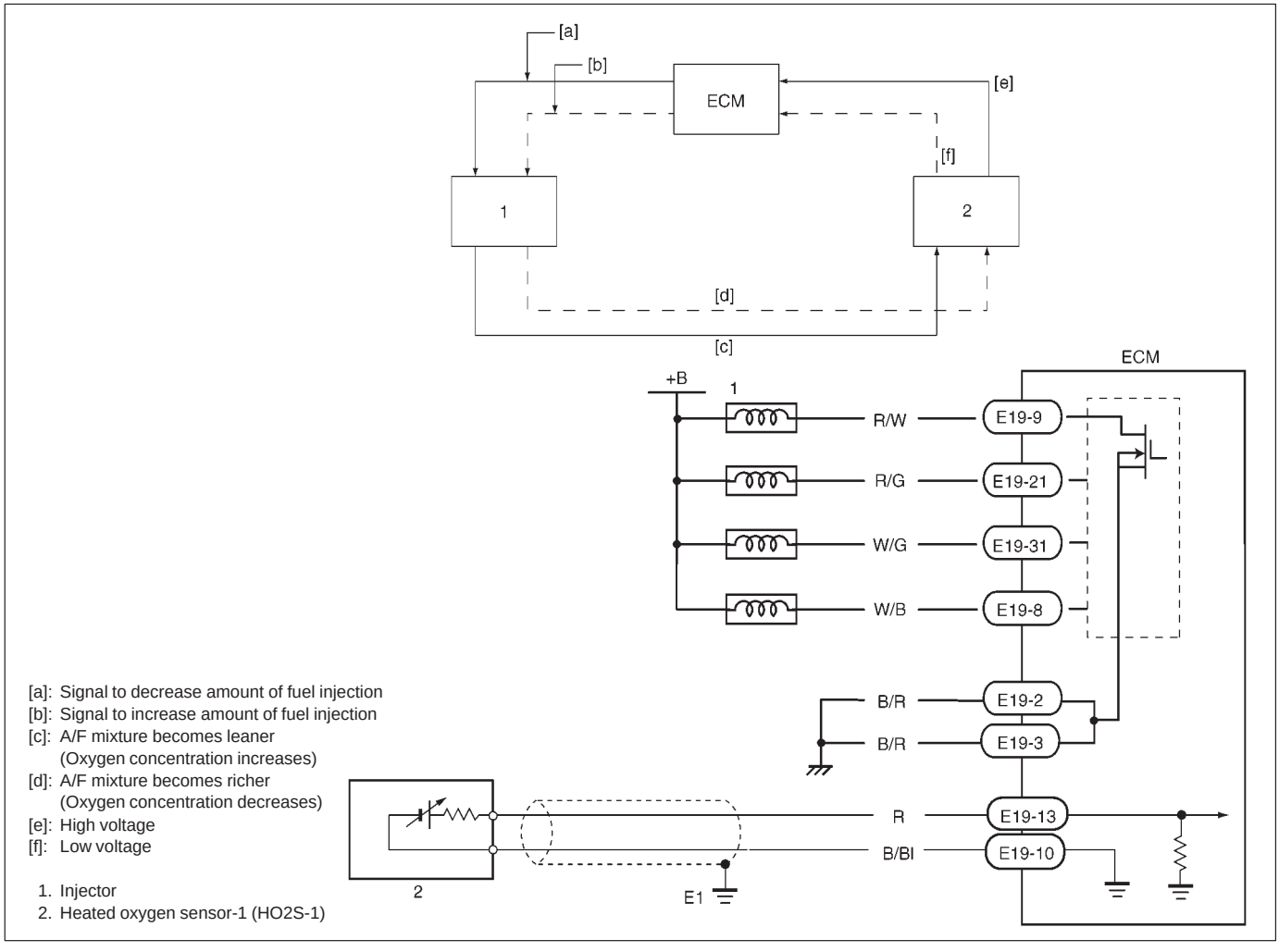

DTC DETECTING CONDITION	POSSIBLE CAUSE
● When following condition occurs while engine running under closed loop condition. – Air/fuel ratio too lean (Total fuel trim (short and long terms added) is more than 30%) or – Air/fuel ratio too rich (Total fuel trim is less than –30%) ∗ 2 driving cycle detection logic, continuous monitoring.	● Vacuum leaks (air drawn in). ● Exhaust gas leakage. ● Heated oxygen sensor-1 circuit malfunction. ● Fuel pressure out of specification. ● Fuel injector malfunction (clogged or leakage). ● MAP sensor poor performance. ● ECT sensor poor performance. ● IAT sensor poor performance. ● TP sensor poor performance. ● EVAP control system malfunction. ● PCV valve malfunction.

DTC CONFIRMATION PROCEDURE

WARNING:
- **When performing a road test, select a place where there is no traffic or possibility of a traffic accident and be very careful during testing to avoid occurrence of an accident.**
- **Road test should be carried out with 2 persons, a driver and a tester on a level road.**

1) Turn ignition switch OFF.
2) Clear DTC with ignition switch ON.
3) Check vehicle and environmental condition for:
   – Altitude (barometric pressure): 2400 m, 8000 ft or less (560 mmHg, 75 kPa or more)
   – Ambient temp.: –10°C, 14°F or higher
   – Intake air temp.: 70°C, 158°F or lower
4) Start engine and drive vehicle under usual driving condition (described in DTC confirmation procedure of DTC P0136) for 5 min. or longer and until engine is warmed up to normal operating temperature.
5) Keep vehicle speed at 30 – 40 mph, 50 – 60 km/h in 5th gear or “D” range for 5 min. or more.
6) Stop vehicle (do not turn ignition switch OFF).
7) Check pending DTC in “ON BOARD TEST” or “PENDING DTC” mode and DTC in “DTC” mode.

INSPECTION

STEP	ACTION	YES	NO
1	Was “ENGINE DIAG. FLOW TABLE” performed?	Go to Step 2.	Go to “ENGINE DIAG. FLOW TABLE”.
2	Is there DTC(s) other than fuel system (DTC P0171/P0172)?	Go to applicable DTC Diag. Flow Table.	Go to Step 3.
3	Check HO2S-1 Output Voltage. 1) Connect scan tool to DLC with ignition switch OFF. 2) Warm up engine to normal operating temperature and keep it at 2000 r/min. for 60 sec. 3) Repeat racing engine (Repeat depressing accelerator pedal 5 to 6 times continuously and take foot off from pedal to enrich and enlean A/F mixture). See Fig. 1. Does HO2S-1 output voltage deflect between below 0.3 V and over 0.6 V repeatedly?	Go to Step 4.	Go to DTC P0130 Diag. Flow Table (HO2S-1 circuit check).
4	Check Fuel Pressure (Refer to section 6E for details). 1) Release fuel pressure from fuel feed line. 2) Install fuel pressure gauge. 3) Check fuel pressure. See Fig. 2. With fuel pump operating and engine at stop : 270 – 310 kPa, 2.7 – 3.1 kg/cm^2, 38.4 – 44.0 psi. At specified idle speed : 210 – 260 kPa, 2.1 – 2.6 kg/cm^2, 29.8 – 37.0 psi. Is measured value as specified?	Go to Step 5.	Go to Diag. Flow Table B-3 Fuel Pressure Check.
5	Check Fuel Injectors and Circuit. 1) Using sound scope (1) or such, check operating sound of each injector (2) when engine is running. Cycle of operating sound should vary according to engine speed. See Fig. 3. If no sound or an unusual sound is heard, check injector circuit (wire or coupler) or injector. 2) Turn ignition switch OFF and disconnect a fuel injector connector. 3) Check for proper connection to fuel injector at each terminal. See Fig. 4. 4) If OK, then check injector resistance. Injector Resistance: 11.3 – 13.8 ohm at 20°C (68°F) 5) Carry out steps 1) and 3) on each injector. 6) Check each injector for injected fuel volume referring to Section 6E. See Fig. 5. Injected Fuel Volume: 43 – 47 cc/15 sec (1.45/1.51 – 1.58/1.65 US/Imp.oz/15 sec) 7) Check each injector for fuel leakage after injector closed. Fuel Leakage: Less than 1 drop/min. Is check result in step 1) and 3) to 7) satisfactory?	Go to Step 6.	Check injector circuit or replace fuel injector(s).
6	Check EVAP Canister Purge Valve. 1) Disconnect purge hose (1) from EVAP canister. 2) Place finger against the end of disconnected hose. 3) Check that vacuum is not felt there when engine is cool and running at idle. See Fig. 6. Is vacuum felt?	Check EVAP control system (See Section 6E).	Go to Step 7.
7	Check intake manifold absolute pressure sensor for performance (See step 4) of DTC P0105 (No.11) Diag. Flow Table). Is it in good condition?	Go to Step 8.	Repair or replace.

STEP	ACTION	YES	NO
8	Check engine coolant temp. sensor for performance (See Section 6E). Is it in good condition?	Go to Step 9.	Replace engine coolant temp. sensor.
9	Check intake air temp. sensor for performance (See Section 6E). Is it in good condition?	Go to Step 10.	Replace intake air temp. sensor.
10	Check throttle position sensor for performance (See step 4) of DTC P0121 Diag. Flow Table). Is it in good condition?	Go to Step 11.	Replace throttle position sensor.
11	Check PCV valve for valve clogging (See Section 6E). Is it good condition?	Substitute a known-good ECM and recheck.	Replace PCV valve.

Fig. 1 for Step 3

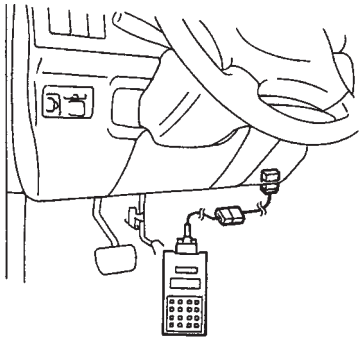

Fig. 2 for Step 4

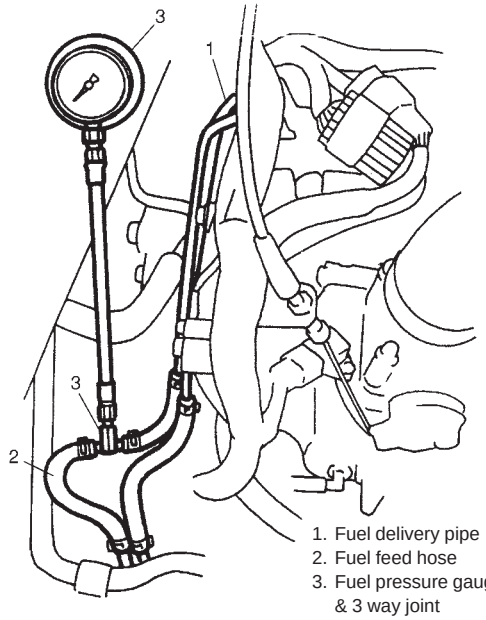

1. Fuel delivery pipe
2. Fuel feed hose
3. Fuel pressure gauge & 3 way joint

Fig. 3 for Step 5

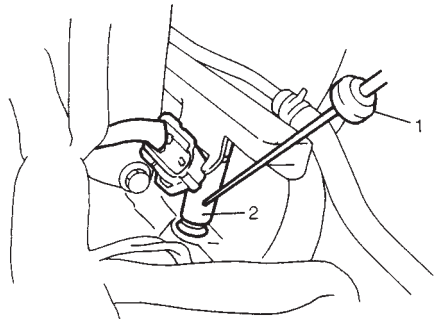

Fig. 4 for Step 5

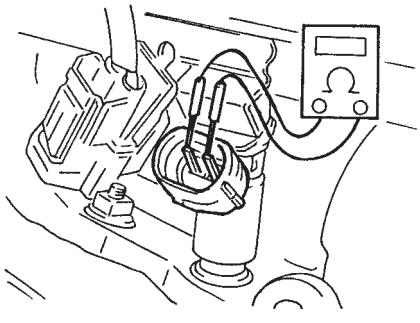

Fig. 5 for Step 5

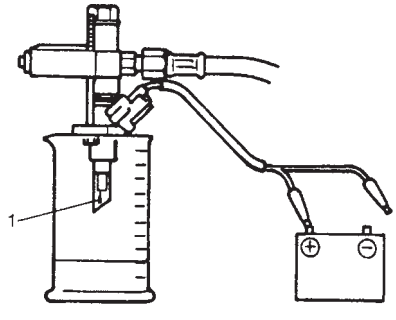

Fig. 6 for Step 6



DTC P0300 RANDOM MISFIRE DETECTED (Misfire detected at 2 or more cylinders)
DTC P0301 CYLINDER 1 MISFIRE DETECTED
DTC P0302 CYLINDER 2 MISFIRE DETECTED
DTC P0303 CYLINDER 3 MISFIRE DETECTED
DTC P0304 CYLINDER 4 MISFIRE DETECTED

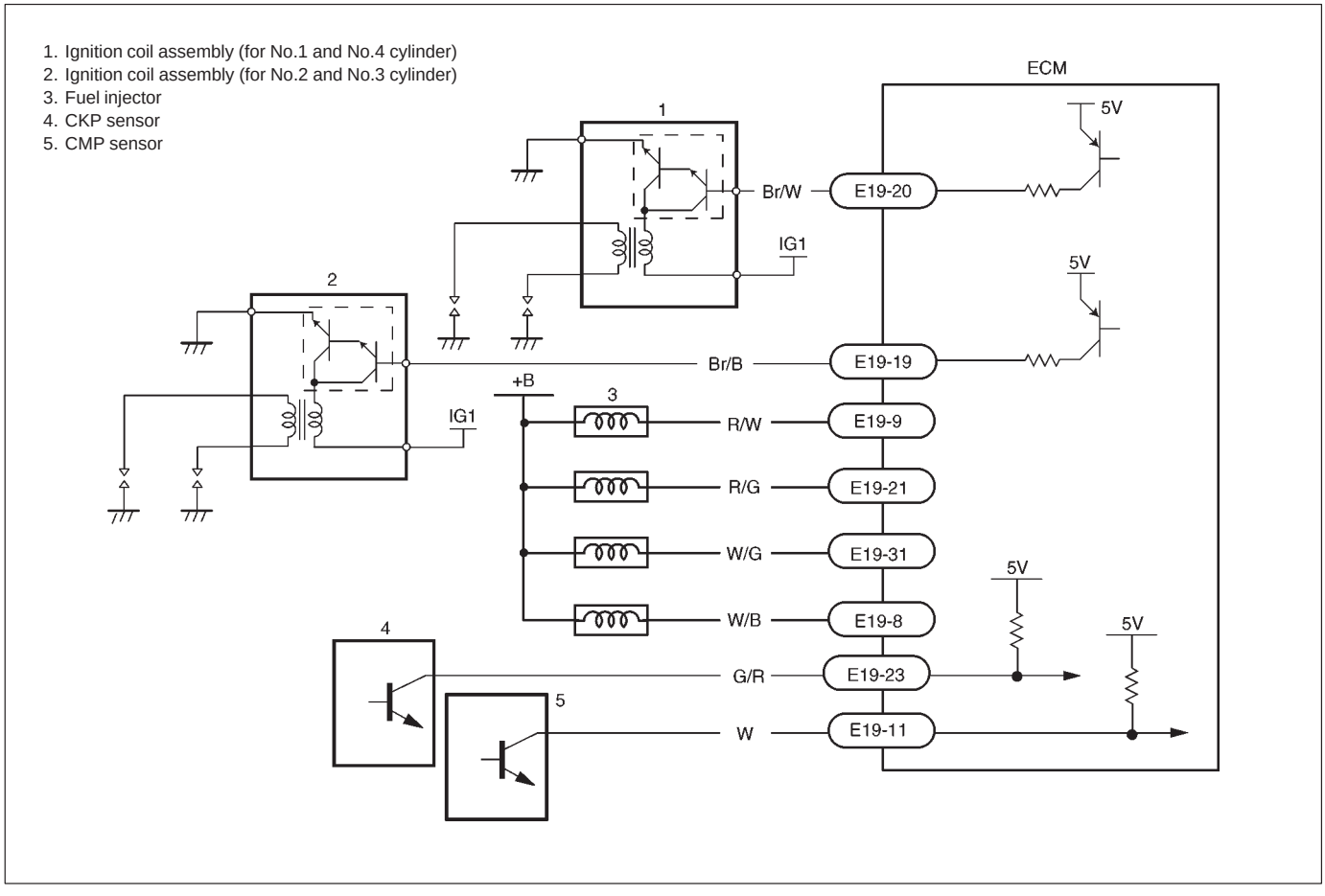

CIRCUIT DESCRIPTION

ECM monitors crankshaft revolution speed and engine speed via the crankshaft position sensor and cylinder No. via the camshaft position sensor. Then it calculates the change in the crankshaft revolution speed and from how many times such change occurred in every 200 or 1000 engine revolutions, it detects occurrence of misfire.

When ECM detects a misfire (misfire rate per 200 revolutions) which can cause overheat and damage to the three way catalytic converter, it makes the malfunction indicator lamp (MIL) flash as long as misfire occurs at that rate. After that, however, when the misfire rate drops, MIL remains ON until it has been judged as normal 3 times under the same driving conditions.

Also, when ECM detects a misfire (misfire rate per 1000 revolutions) which will not cause damage to three way catalytic converter but can cause exhaust emission to be deteriorated, it makes MIL light according to the 2 driving cycle detection logic.

DTC DETECTING CONDITION	POSSIBLE CAUSE
● Engine under other than high revolution condition ● Not on rough road ● Engine speed changing rate ● Manifold absolute pressure changing rate (Below specified value) ● Throttle opening changing rate ● Misfire rate per 200 or 1000 engine revolutions (how much and how often crankshaft revolution speed changes) is higher than specified value	● Engine overheating ● Vacuum leaks (air inhaling) from air intake system ● Ignition system malfunction (spark plug(s), high-tension cord(s), ignition coil assembly) ● Fuel pressure out of specification ● Fuel injector malfunction (clogged or leakage) ● Engine compression out of specification ● Valve lash (clearance) out of specification ● Manifold absolute pressure sensor malfunction ● Engine coolant temp. sensor malfunction ● PCV valve malfunction ● EVAP control system malfunction ● EGR system malfunction

DTC CONFIRMATION PROCEDURE

NOTE:

Among different types of random misfire, if misfire occurs at cylinders 1 and 4 or cylinders 3 and 2 simultaneously, it may not possible to reconfirm DTC by using the following DTC confirmation procedure. When diagnosing the trouble of DTC P0300 (Random misfire detected) of the engine which is apparently misfiring, even if DTC P0300 cannot be reconfirmed by using the following DTC confirmation procedure, proceed to the following Diag. Flow Table.

WARNING:
- **When performing a road test, select a place where there is no traffic or possibility of a traffic accident and be very careful during testing to avoid occurrence of an accident.**
- **Road test should be carried out with 2 persons, a driver and a tester.**

1) Turn ignition switch OFF.
2) Clear DTC with ignition switch ON.
3) Check vehicle and environmental condition for:
   – Altitude (barometric pressure): 2400 m, 8000 ft or less (560 mmHg, 75 kPa or more)
   – Ambient temp.: –10°C, 14°F or higher
   – Intake air temp.: 70°C, 158°F or lower
   – Engine coolant temp.: –10 – 110°C, 14 – 230°F
4) Start engine and keep it at idle for 2 min. or more.
5) Check DTC in “DTC” mode and pending DTC in “ON BOARD TEST” or “PENDING DTC” mode.
6) If DTC is not detected at idle, consult usual driving based on information obtained in “Customer complaint analysis” and “Freeze frame data check”.

INSPECTION

STEP	ACTION	YES	NO
1	Was “ENGINE DIAG. FLOW TABLE” performed?	Go to Step 2.	Go to “ENGINE DIAG. FLOW TABLE“.
2	Is there DTC other than Fuel system (DTC P0171/P0172) and misfire (DTC P0300-P0304)?	Go to applicable DTC Diag. Flow Table.	Go to Step 3.
3	Check Ignition System. 1) Remove spark plugs and check them for; ● Air gap: 1.0 – 1.1 mm (0.040 – 0.043 in.) See Fig. 1. ● Carbon deposits/Insulator damage/Plug type If abnormality is found, adjust, clean or replace by referring to Section 6F. **CAUTION:** **For iridium spark plugs, do not adjust air gap or clean.** 2) Disconnect all injector connectors. See Fig. 2. 3) Connect spark plugs to high tension cords and then ground spark plugs. 4) Crank engine and check that each spark plug sparks. Are above check results satisfactory?	Go to Step 4.	Check ignition system parts (Refer to Section 6F).
4	Check Fuel Pressure (Refer to Section 6E for details). 1) Release fuel pressure from fuel feed line. 2) Install fuel pressure gauge. See Fig. 3. 3) Check fuel pressure. With fuel pump operating and engine at stop : 270 – 310 kPa, 2.7 – 3.1 kg/cm^2, 38.4 – 44.0 psi. At specified idle speed : 210 – 260 kPa, 2.1 – 2.6 kg/cm^2, 29.8 – 37.0 psi. Is measured value as specified?	Go to Step 5.	Go to Diag. Flow Table B-3 fuel pressure check.
5	Check Fuel Injectors and Circuit. 1) Using sound scope (1) or such, check operating sound of each injector (2) when engine is running. Cycle of operating sound should very according to engine speed. See Fig 4. If no sound or an unusual sound is heard, check injector circuit (wire or coupler) or injector. 2) Turn ignition switch OFF and disconnect a fuel injector connector. 3) Check for proper connection to fuel injector at each terminal. See Fig. 5. 4) If OK, then check injector resistance. Injector Resistance: 11.3 – 13.8 ohm at 20°C (68°F) 5) Carry out steps 1) and 3) on each injector. 6) Check each injector for injected fuel volume referring to Section 6E. See Fig. 6. Injected Fuel Volume: 43 – 47 cc/15 sec (1.45/1.51 – 1.58/1.65 US/Imp. oz/15 sec) 7) Check each injector for fuel leakage after injector closed. Fuel Leakage: Less than 1 drop/min. Is check result in step 1) and 3) to 7) satisfactory?	Go to Step 6.	Check injector circuit or replace fuel injector(s).

STEP	ACTION	YES	NO
6	Check PCV valve for clogging (See Section 6E). Is it in good condition?	Go to Step 7.	Replace PCV valve.
7	Check EVAP Canister Purge Valve for Closing. 1) Disconnect purge hose (1) from EVAP canister. 2) Place finger against the end of disconnected hose. 3) Check that vacuum is not felt there, when engine is cool and running at idle. See Fig. 7. Is vacuum felt?	Check EVAP control system (See Section 6E).	Go to Step 8.
8	Check manifold absolute pressure sensor for performance (See step 4) DTC P0105 Diag. Flow Table). Is it in good condition?	Go to Step 9.	Repair or replace.
9	Check engine coolant temp. sensor for performance (See Section 6E). Is it in good condition?	Go to Step 10.	Replace engine coolant temp. sensor.
10	Check parts or system which can cause engine rough idle or poor performance. – Engine compression (See Section 6A1). – Valve lash (See Section 6A1). – Valve timing (Timing belt installation. See Section 6A1). Are they in good condition?	Check wire harness and connection of ECM ground, ignition system and fuel injector for intermittent open and short.	Repair or replace.

Fig. 1 for Step 3

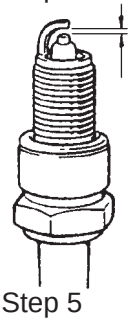

Fig. 2 for Step 3

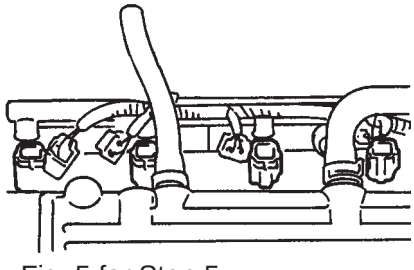

Fig. 3 for Step 4

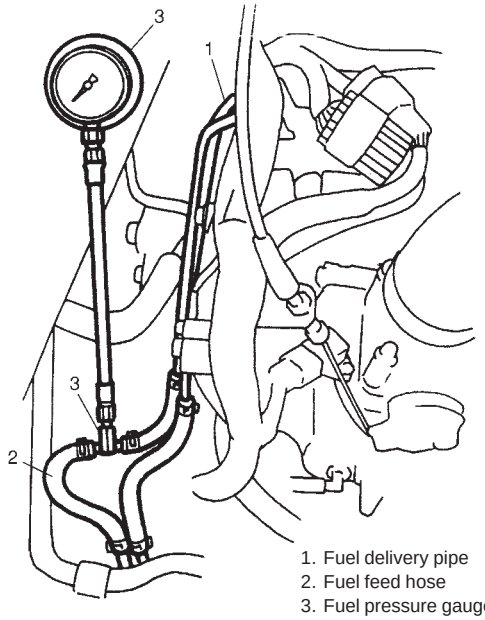

1. Fuel delivery pipe
2. Fuel feed hose
3. Fuel pressure gauge & 3 way joint

Fig. 4 for Step 5

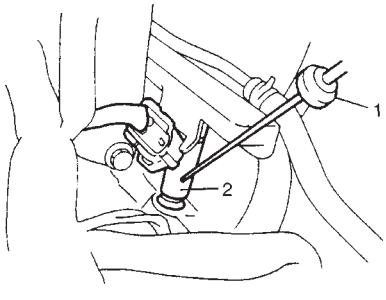

Fig. 5 for Step 5

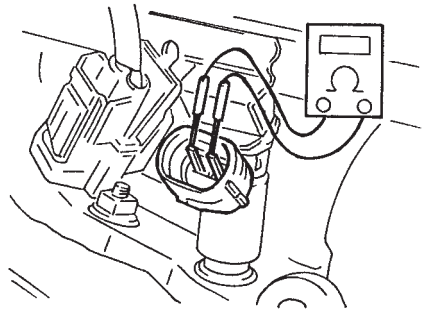

Fig. 6 for Step 5

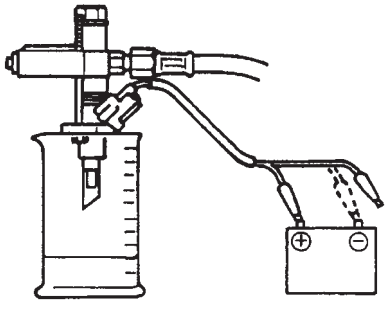

Fig. 7 for Step 7



DTC P0325 (DTC No.17) KNOCK SENSOR CIRCUIT MALFUNCTION

CIRCUIT DESCRIPTION

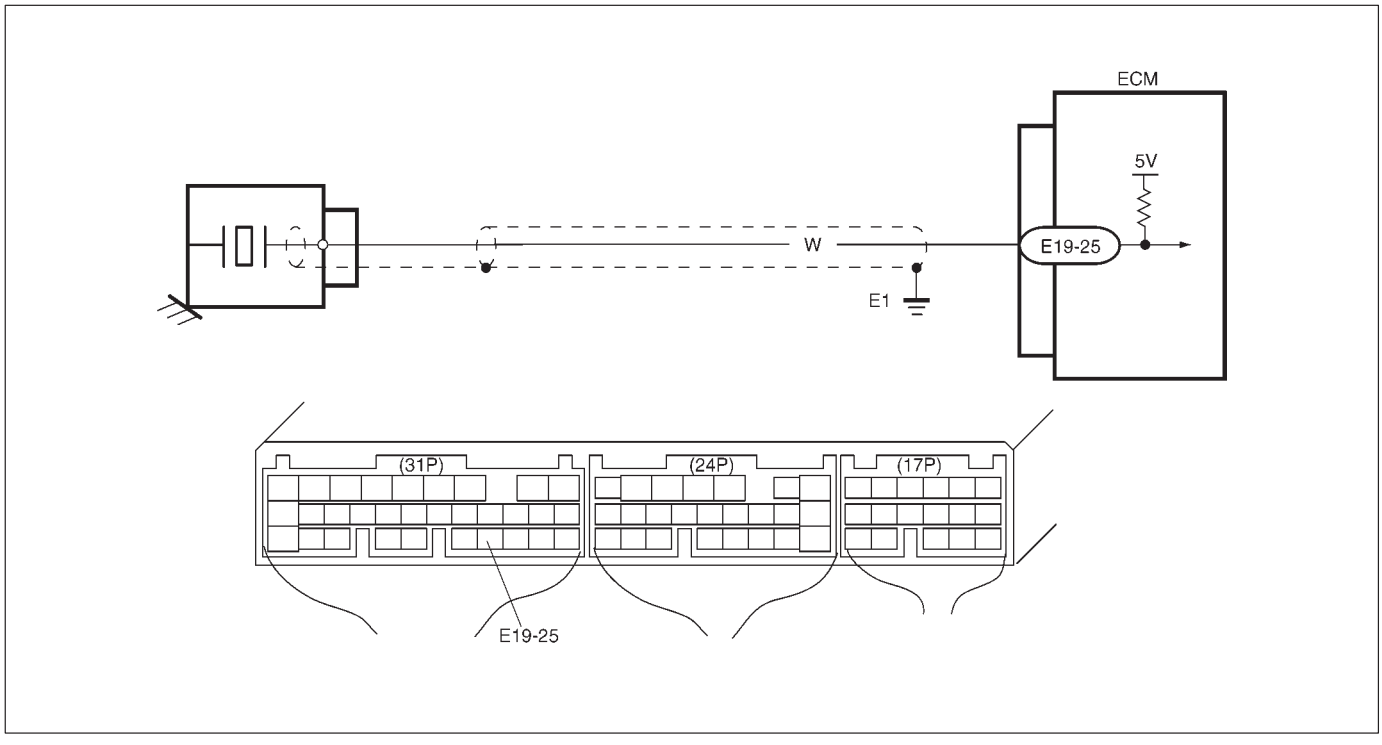

DTC DETECTING CONDITION	POSSIBLE CAUSE
● Knock sensor voltage is 3.91 V or more ● Knock sensor voltage is 1.23 V or less	● "W" circuit open or shorted to ground ● Knock sensor malfunction ● ECM malfunction

DTC CONFIRMATION PROCEDURE

1) Clear DTC, start engine and keep it at idle for 1 min.
2) Select "DTC" mode on scan tool and check DTC.

INSPECTION

STEP	ACTION	YES	NO
1	Was "ENGINE DIAG. FLOW TABLE performed?	Go to Step 2.	Go to "ENGINE DIAG. FLOW TABLE".
2	1) With engine running, check voltage from "E19-25" terminal of ECM connector to body ground. See Fig. 1. 2) Is voltage about 1.25 – 3.75 V?	Knock sensor and its circuit are in good condition. Intermittent trouble or faulty ECM. Recheck, referring to INTERMITTENT TROUBLE in Section 0A.	Go to Step 3.
3	1) Stop engine. 2) With ignition switch at OFF position, disconnect knock sensor connector. 3) With ignition switch at ON position, check voltage from "W" to body ground terminal of knock sensor connector. See Fig. 2. 4) Is it 4 – 5 V?	Faulty knock sensor. Substitute a known-good knock sensor and recheck.	"W" wire open, shorted to ground circuit or poor "E19-25" connection. If wire and connection are OK, substitute a known-good ECM and recheck.

Fig. 1 for Step 2

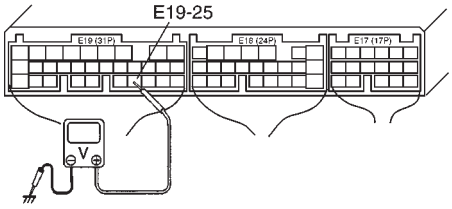

Fig. 2 for Step 2

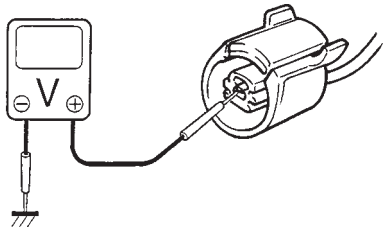

DTC P0335 CRANKSHAFT POSITION (CKP) SENSOR CIRCUIT (DTC No.23) MALFUNCTION

CIRCUIT DESCRIPTION

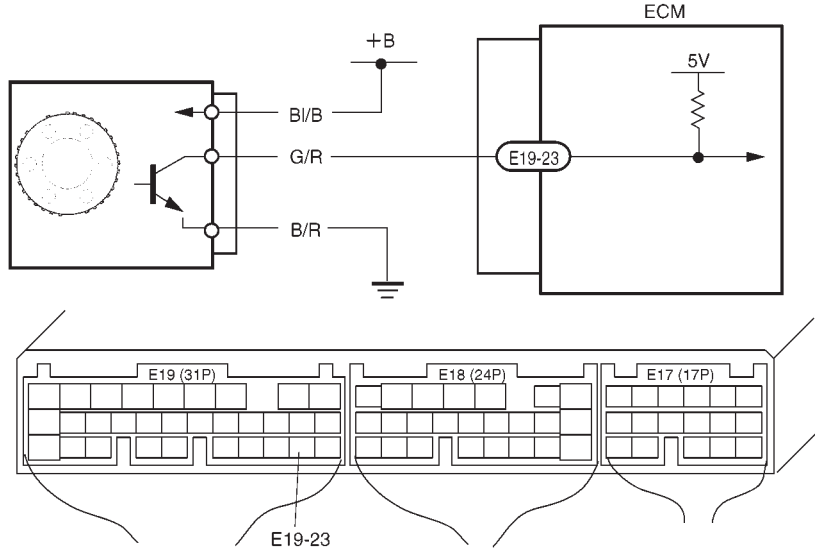

DTC DETECTING CONDITION	POSSIBLE CAUSE
● NO CKP sensor signal for 2 seconds at engine cranking.	● CKP sensor circuit open or short. ● Signal teeth damaged. ● CKP sensor malfunction, foreign material being attached or improper installation. ● ECM malfunction.

Reference

Connect oscilloscope between terminals E19-23 of ECM connector connected to ECM and body ground and check CKP sensor signal.

Oscilloscope Waveforms

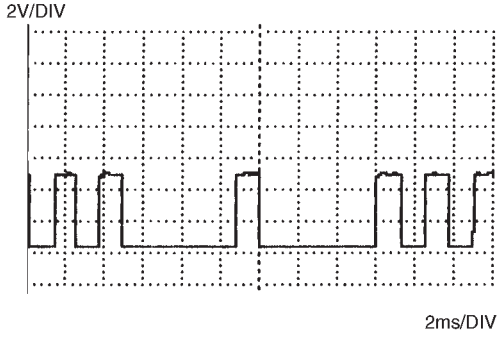

Waveforms at idle speed

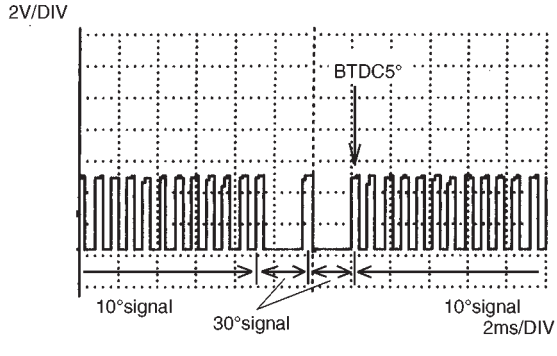

Waveforms at 2000 rpm

DTC CONFIRMATION PROCEDURE

1) Clear DTC and crank engine for 2 sec.
2) Select “DTC” mode on scan tool and check DTC.

INSPECTION

STEP	ACTION	YES	NO
1	Was “ENGINE DIAG. FLOW TABLE” performed?	Go to Step 2.	Go to “ENGINE DIAG. FLOW TABLE”.
2	Check CKP Sensor and connector for proper installation. Is CKP sensor installed properly and connector connected securely?	Go to Step 3.	Correct.
3	Check Wire Harness and Connection. 1) Disconnect connector from CKP sensor. 2) Check for proper connection to CKP sensor at each terminal. 3) If OK, turn ignition switch ON and check for voltage at each terminal of sensor connector disconnected. See Fig. 1. Terminal “B+” : 10 – 14 V Terminal “Vout” : 4 – 5 V Terminal “GND” : 0 V Is check result satisfactory?	Go to Step 5.	Go to Step 4.
4	Was terminal “Vout” voltage out of specification in Step 3 check?	“G/R” wire open, short or poor connection. If wire and connection are OK, substitute a known-good ECM and recheck.	“Bl/B” or “B/R” wire open, short or poor connection.
5	Check Ground Circuit for Open. 1) Turn ignition switch OFF. 2) Check for continuity between “GND” terminal of CKP sensor connector and engine ground. Is continuity indicated?	Go to Step 6.	“B/R” wire open or poor ground connection.
6	Check CKP Sensor for Operation. 1) Remove CKP sensor from sensor case. 2) Remove metal particles on end face of CKP sensor, if any. 3) Connect each connector to ECM and CKP sensor. 4) Turn ignition switch ON. 5) Check for voltage at terminal E19-23 of connector connected to ECM by passing magnetic substance (iron) while keeping approximately 1 mm (0.03 in.) gap with respect to end face of CKP sensor. See Fig. 2 and 3. Does voltage vary from low (0 – 1 V) to high (4 – 5 V) or from high to low?	Go to Step 7.	Replace CKP sensor.

STEP	ACTION	YES	NO
7	Check signal rotor for the following. See Fig. 4. ● Damage ● No foreign material attached Is it in good condition?	Intermittent trouble or faulty ECM. Check for intermittent referring to “Intermittent and Poor Connection” in Section 0A.	Clean rotor teeth or replace CKP sensor.

Fig. 1 for Step 3

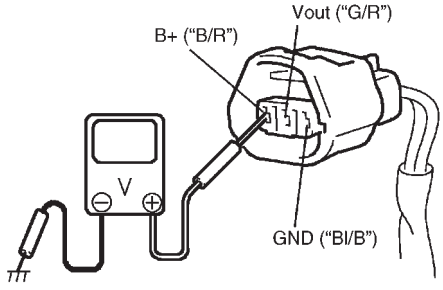

Fig. 2 for Step 6

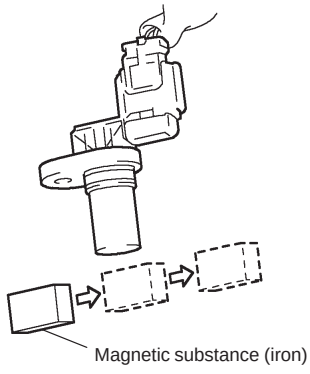

Fig. 3 for Step 6

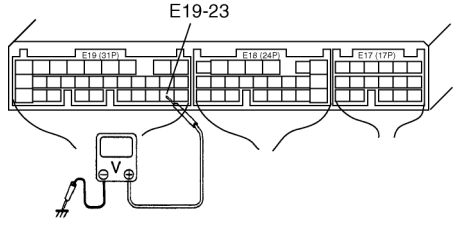

Fig. 4 for Step 7

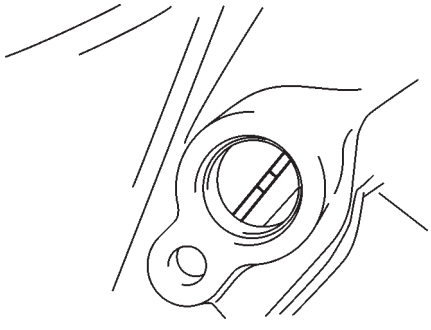

DTC P0340 CAMSHAFT POSITION (CMP) SENSOR CIRCUIT MALFUNCTION (DTC No.15)

CIRCUIT DESCRIPTION

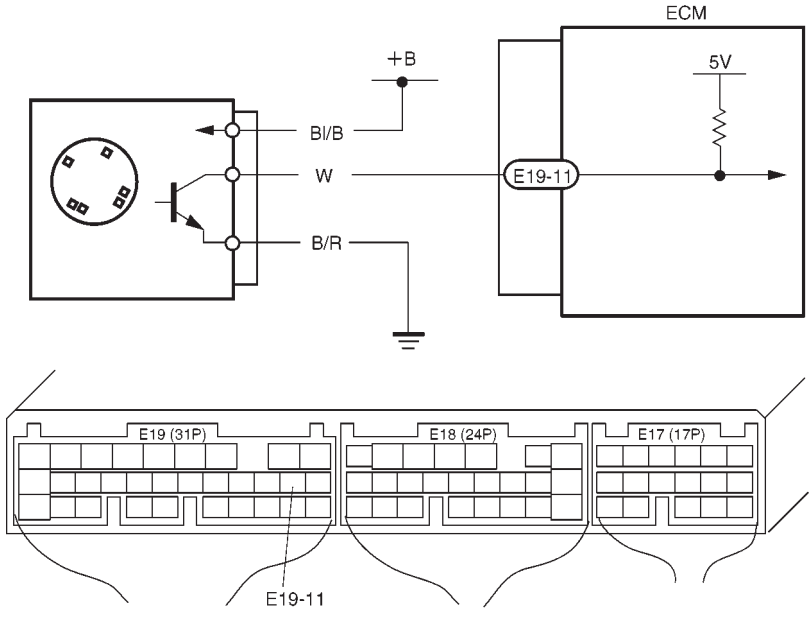

DTC DETECTING CONDITION	POSSIBLE CAUSE
● The number of CMP sensor signal pulses is incorrect during 8 revolution of crankshaft.	● CMP sensor circuit open or short. ● Signal rotor teeth damaged. ● CMP sensor malfunction, foreign material being attached or improper installation. ● ECM malfunction. ● CMP sensor phase lag.

Reference

Connect oscilloscope between terminals E19-11 of ECM connector connected to ECM and body ground and check CMP sensor signal.

Oscilloscope Waveforms

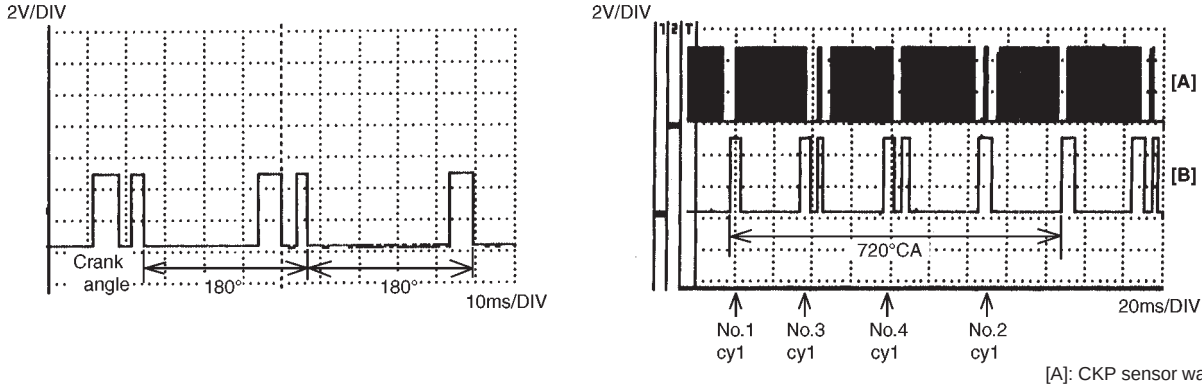

[A]: CKP sensor waveform
[B]: CMP sensor waveform

Waveforms at specified idle speed

DTC CONFIRMATION PROCEDURE

1) Clear DTC.
2) Start engine and keep it at idle for 1 min.
3) Select “DTC” mode on scan tool and check DTC.

INSPECTION

STEP	ACTION	YES	NO
1	Was “ENGINE DIAG. FLOW TABLE” performed?	Go to Step 2.	Go to “ENGINE DIAG. FLOW TABLE”.
2	Check CMP Sensor and connector for proper installation. Is CMP sensor installed properly and connector connected securely?	Go to Step 3.	Correct.
3	Check Wire Harness and Connection. 1) Disconnect connector from CMP sensor. 2) Check for proper connection to CMP sensor at each terminal. 3) If OK, turn ignition switch ON and check for voltage at each terminal of sensor connector disconnected. See Fig. 1. Terminal “B+” : 10 – 14 V Terminal “Vout” : 4 – 5 V Terminal “GND” : 0 V Is check result satisfactory?	Go to Step 5.	Go to Step 4.
4	Was terminal “Vout” voltage out of specification in Step 3 check?	“W” wire open, short or poor connection. If wire and connection are OK, substitute a known-good ECM and recheck.	“Bl/B” or “B/R” wire open, short or poor connection.
5	Check Ground Circuit for Open. 1) Turn ignition switch OFF. 2) Check for continuity between “GND” terminal of CMP sensor connector and engine ground. Is continuity indicated?	Go to Step 6.	“B/R” wire open or poor ground connection.
6	Check CMP Sensor for Operation. 1) Remove CMP sensor from sensor case. 2) Remove metal particles on end face of CMP sensor, if any. 3) Connect each connector to ECM and CMP sensor. 4) Turn ignition switch ON. 5) Check for voltage at terminal E19-11 of connector connected to ECM by passing magnetic substance (iron) while keeping approximately 1 mm (0.03 in.) gap with respect to end face of CMP sensor. See Fig. 2 and 3. Does voltage vary from low (0 – 1 V) to high (4 – 5 V) or from high to low?	Go to Step 7.	Replace CMP sensor.

STEP	ACTION	YES	NO
7	Check signal rotor for the following. See Fig. 4. ● Damage ● No foreign material attached Is it in good condition?	Intermittent trouble or faulty ECM. Check for intermittent referring to “Intermittent and Poor Connection” in Section 0A.	Clean rotor teeth or replace CMP sensor.

Fig. 1 for Step 3

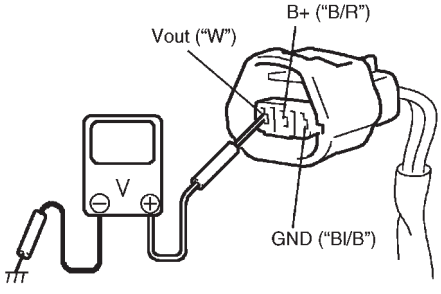

Fig. 2 for Step 6

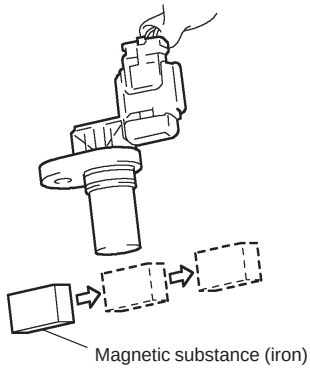

Fig. 3 for Step 6

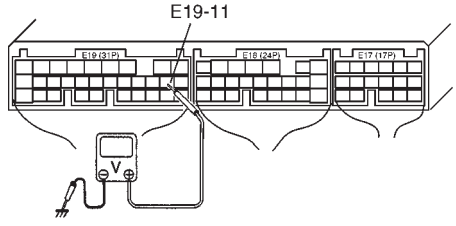

Fig. 4 for Step 7

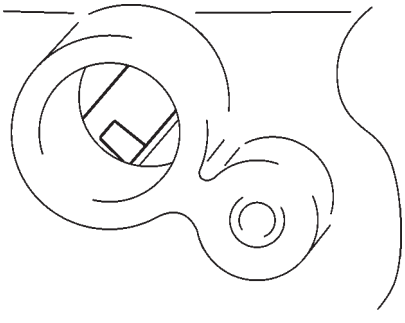

DTC P0400 EXHAUST GAS RECIRCULATION FLOW MALFUNCTION

CIRCUIT DESCRIPTION

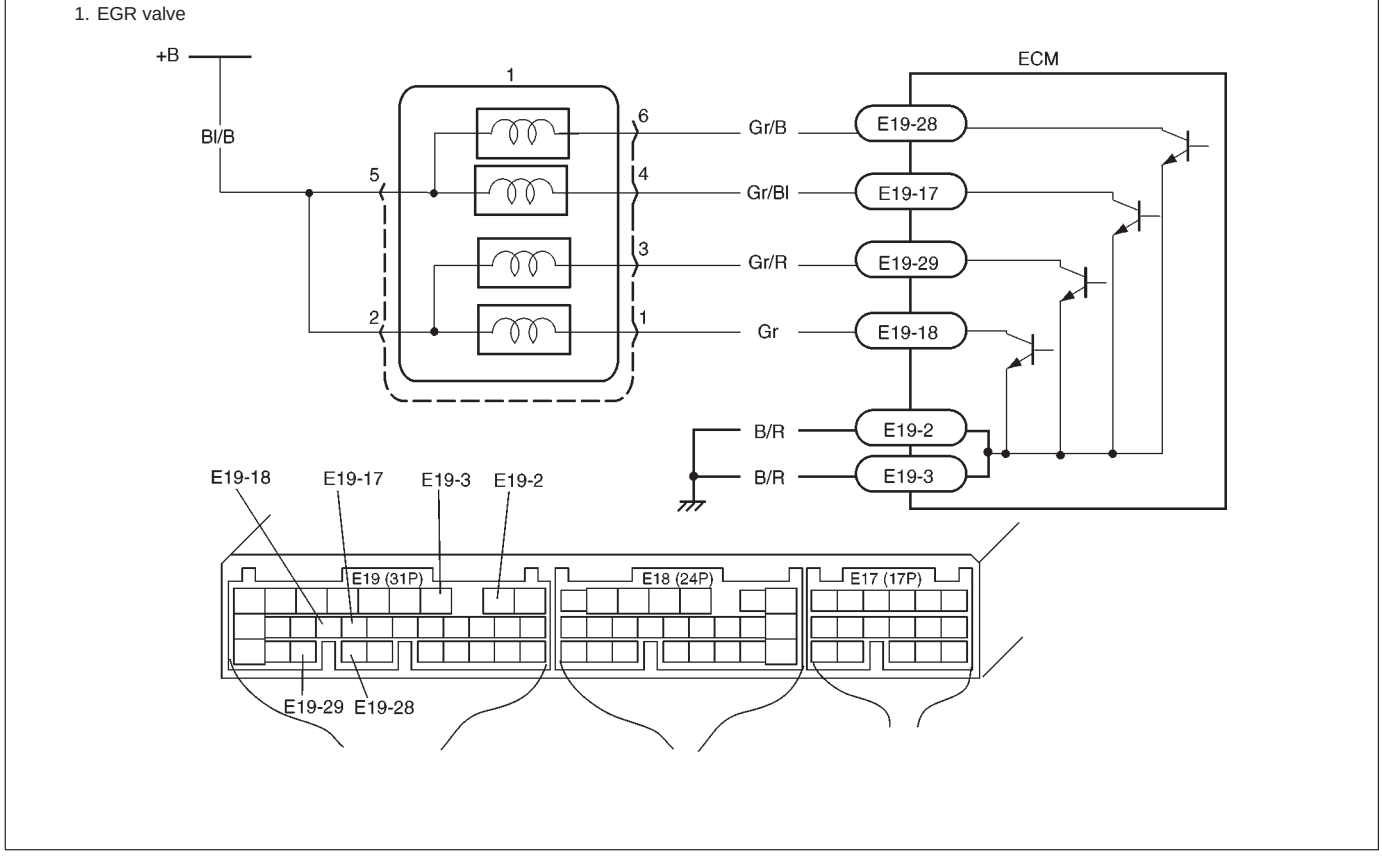

DTC DETECTING CONDITION	POSSIBLE CAUSE
● While running at specified vehicle speed after engine warm-up ● During deceleration (engine speed high with closed throttle position ON) in which fuel cut is involved, difference in intake manifold absolute pressure between when EGR valve is opened at specified value and when it is closed is larger or smaller than specified value. ※ 2 driving cycle detection logic, monitoring once/1 driving	● EGR valve or its circuit ● EGR passage ● ECM

DTC CONFIRMATION PROCEDURE

WARNING:
- **When performing a road test, select a place where there is no traffic or possibility of a traffic accident and be very careful during testing to avoid occurrence of an accident.**
- **Road test should be carried out with 2 persons, a driver and a tester, on a level road.**

1) Turn ignition switch OFF.
   Clear DTC with ignition switch ON, check vehicle and environmental condition for:
   – Altitude (barometric pressure): 2400 m, 8000 ft or less (560 mmHg, 75 kPa or more)
   – Ambient temp.: –10°C, 14°F or higher
   – Intake air temp.: 70°C, 122°F or lower
2) Start engine and warm it up to normal operating temperature (70 – 110°C, 158 – 230°F) and run it at idle for 5 min.
3) Increase vehicle speed to 50 – 55 mph, 80 – 88 km/h in 5th gear or in “D” range.
4) Hold throttle valve at that opening position for 2 min. or longer.
5) Increase engine speed to 4000 r/min. in 3rd gear or in “2” range.
6) Release accelerator pedal and with engine brake applied, keep vehicle coasting (fuel cut condition) till engine speed reaches 1500 r/min.
7) Stop vehicle (don’t turn ignition switch OFF) and confirm test results according to following “Test Result Confirmation Flow Table.”

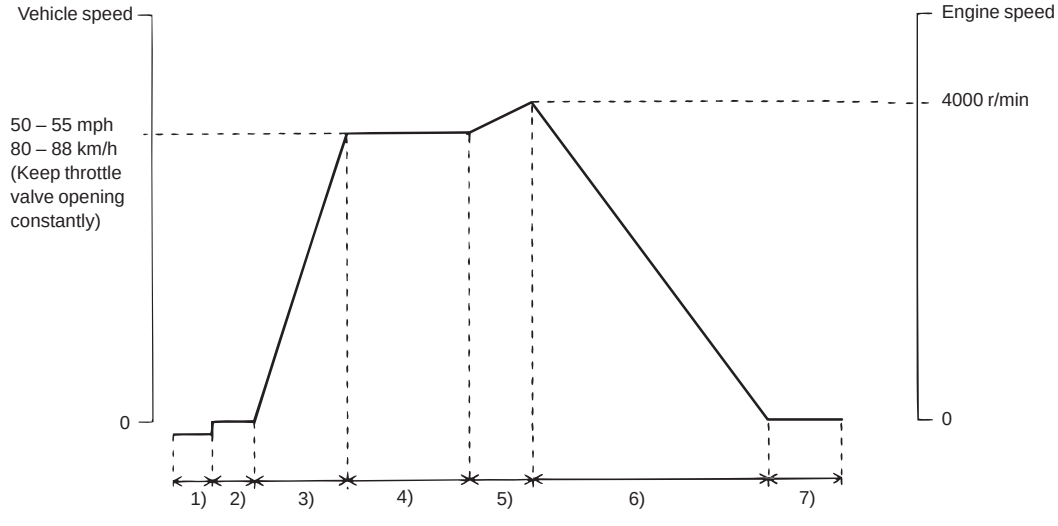

Test Result Confirmation Flow Table

STEP	ACTION	YES	NO
1	Check DTC in “DTC” mode and pending DTC in “ON BOARD TEST”. Is DTC or pending DTC displayed?	Proceed to applicable DTC flow table.	Go to Step 2.
2	Set scan tool to “READINESS TESTS” mode and check if testing has been completed. Is test completed?	No DTC is detected. (Confirmation test is completed)	Repeat DTC confirmation procedure.

DTC P0400

INSPECTION

STEP	ACTION	YES	NO
1	Was “ENGINE DIAG. FLOW TABLE” performed?	Go to Step 2.	Go to “ENGINE DIAG. FLOW TABLE”.
2	1) Turn ignition switch ON. 2) Does EGR stepper motor operation for 0.6 second after ignition switch OFF?	Go to Step 3.	Go to Step 6.
3	With ignition switch at OFF, check voltage between E19-28, 17, 29, 18 terminals of ECM and body ground. Is voltage about 0 V? Next turn ignition switch to ON, check voltage between E19-28, 17, 29, 18 terminals of ECM and body ground. Is voltage within 10 – 14 V?	Go to Step 4.	Go to Step 7.
4	Do you have SUZUKI scan tool?	Go to Step 5.	Stuck or faulty EGR valve or clogged EGR gas passage. If all above are OK, substitute a known-good ECM and recheck.
5	Check EGR system referring to “EGR SYSTEM -system inspection” in Section 6E. Is check result satisfactory?	Substitute a known-good ECM and recheck.	Stuck or faulty EGR valve or clogged EGR gas passage.
6	1) Disconnect EGR valve connector with ignition switch OFF. 2) Check voltage between “Bl/B” wire terminals of EGR valve connector and body ground with ignition switch ON. 3) Are they about 10 – 14 V?	Go to Step 3.	“Bl/B” wire open or short
7	Check EGR valve referring to “EGR SYSTEM -Inspection” in Section 6E. Is it good condition?	EGR valve harness (“Gr/B”, “Gr/Bl”, “Gr/R” or “Gr” wire) open or short or poor connector connection (EGR valve connector, E19-28, 17, 29, 18) If wire harness and connection are OK, substitute a known-good ECM and recheck.	Faulty EGR valve

Fig. 1 for Step 6

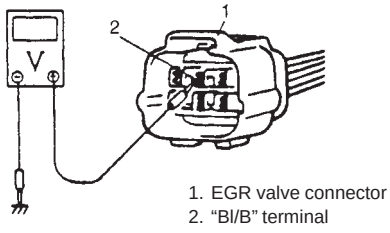

1. EGR valve connector
2. “Bl/B” terminal

Fig. 2 for Step 3

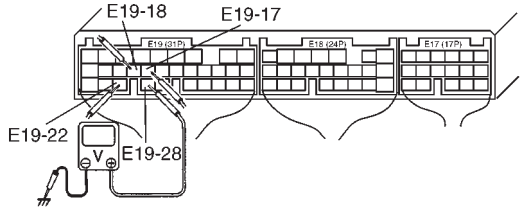

DTC P0420 CATALYST SYSTEM EFFICIENCY BELOW THRESHOLD

CIRCUIT DESCRIPTION

1. Heated oxygen sensor-1
2. Warm up three way catalytic converter
3. Three way catalytic converter
4. Heated oxygen sensor-2
5. To the sensor

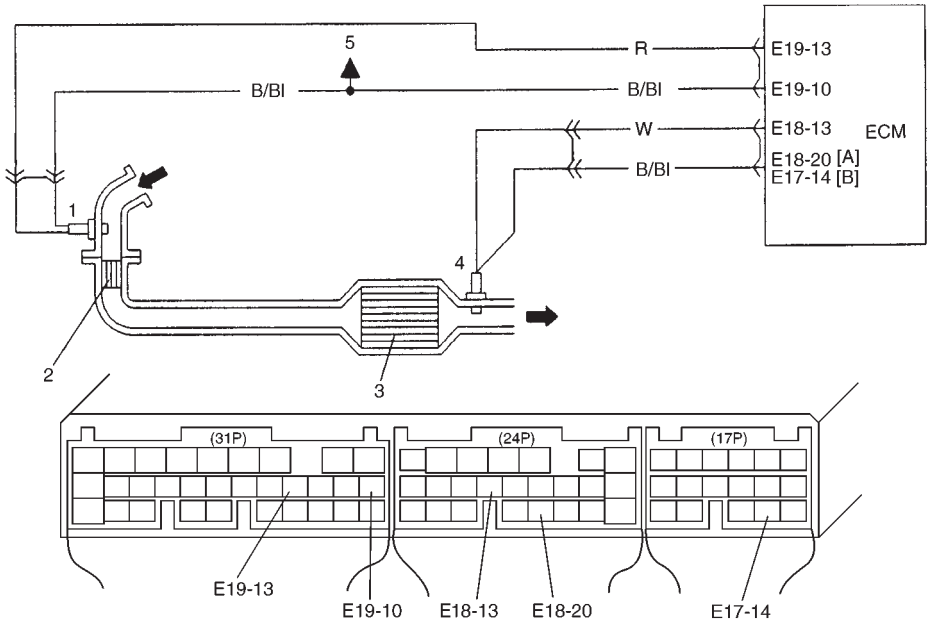

[A]: Case of TYPE A is shown (See NOTE)
[B]: Case of TYPE B is shown (See NOTE)

NOTE:
For TYPE A and TYPE B, refer to the NOTE in "ECM TERMINAL VOLTAGE VALUES TABLE" for applicable model.

ECM monitors oxygen concentration in the exhaust gas which has passed the three way catalytic converter by HO2S-2.
When the catalyst is functioning properly, the variation cycle of HO2S-2 output voltage (oxygen concentration) is slower than that of HO2S-1 output voltage because of the amount of oxygen in the exhaust gas which has been stored in the catalyst.

Reference

Oscilloscope Waveforms

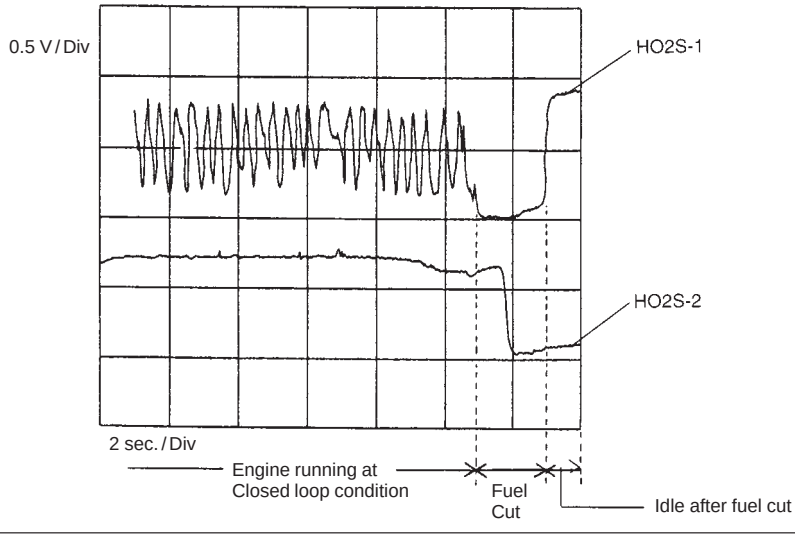

DTC DETECTING CONDITION	POSSIBLE CAUSE
● While vehicle running at constant speed under other than high load. ● Time from rich or lean switching command is output till HO2S-2 output voltage crosses 0.45 V less than specified value. ⁎ 2 driving cycle detection logic, monitoring once / 1 driving.	● Exhaust gas leak ● Three way catalytic converter malfunction ● Fuel system malfunction ● HO2S-2 malfunction ● HO2S-1 malfunction

DTC CONFIRMATION PROCEDURE

WARNING:
- **When performing a road test, select a place where there is no traffic or possibility of a traffic accident and be very careful during testing to avoid occurrence of an accident.**
- **Road test should be carried out with 2 persons, a driver and a tester, on a level road.**

1) Turn ignition switch OFF.
   Clear DTC with ignition switch ON, check vehicle and environmental condition for:
   – Altitude (barometric pressure): 2400 m, 8000 ft or less (560 mmHg, 75 kPa or more)
   – Ambient temp.: –10°C, 14°F or higher
   – Intake air temp.: 70°C, 158°F or lower
   – Engine coolant temp.: 70 – 110°C, 158 – 230°F
2) Start engine and drive vehicle at 35 – 45 mph, 55 – 65 km/h for 8 min. or longer.
   While this driving, if "Catalyst Monitoring TEST COMPLETED" is displayed in "READINESS TESTS" mode and DTC is not displayed in "DTC" mode, confirmation test is completed.
   If "TEST NOT COMPLTD" is still being displayed, continue test driving.
3) Decrease vehicle speed at 30 – 40 mph, 50 – 60 km/h, and hold throttle valve at that opening position for 2 min. and confirm that short term fuel trim vary within –20% –+20% range.
4) Stop vehicle (do not turn ignition switch OFF) and confirm test results according to following "Test Result Confirmation Flow Table".

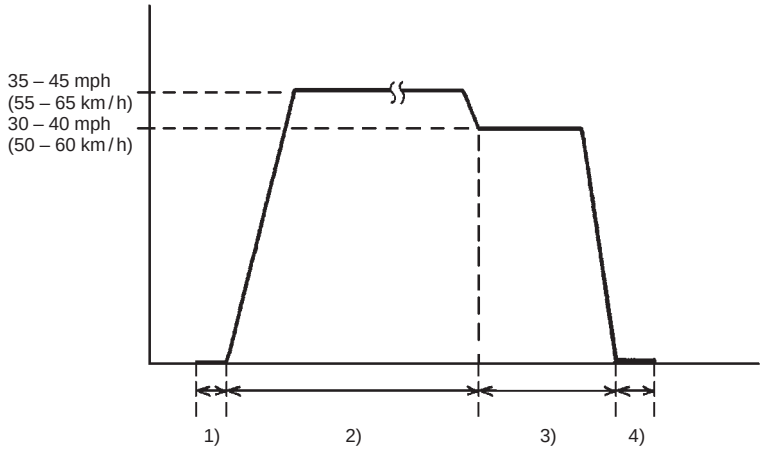

Test Result Confirmation Flow Table

STEP	ACTION	YES	NO
1	Check DTC in "DTC" mode and pending DTC in "ON BOARD TEST" or "PENDING DTC" mode. Is DTC or pending DTC displayed?	Proceed to applicable DTC Diag. Flow Table.	Go to Step 2.
2	Set scan tool to "READINESS TESTS" mode and check if testing has been completed. Is test completed?	No DTC is detected (confirmation test iscompleted).	Repeat DTC confirmation procedure.

DTC P0420

INSPECTION

STEP	ACTION	YES	NO
1	Was “ENGINE DIAG. FLOW TABLE” performed?	Go to Step 2.	Go to “ENGINE DIAG. FLOW TABLE”.
2	Check Short Term Fuel Trim. Did short term fuel trim vary within –20% –+20% range in step 3) of DTC confirmation test?	Go to Step 3.	Check fuel system. Go to DTC P0171/P0172 Diag. Flow Table.
3	Check HO2S-2 for Output Voltage. Perform steps 1) through 9) of DTC confirmation procedure for DTC P0136 (HO2S-2 malfunction) and check output voltage of HO2S-2 then. Is over 0.6 V and below 0.3 V indicated?	Replace three way catalytic converter.	Check “W” and “B/Bl” wires for open and short, and connections for poor connection. If wires and connections are OK, replace HO2S-2.

DTC P0443 PURGE CONTROL VALVE CIRCUIT MALFUNCTION

CIRCUIT DESCRIPTION

1. EVAP canister purge vale

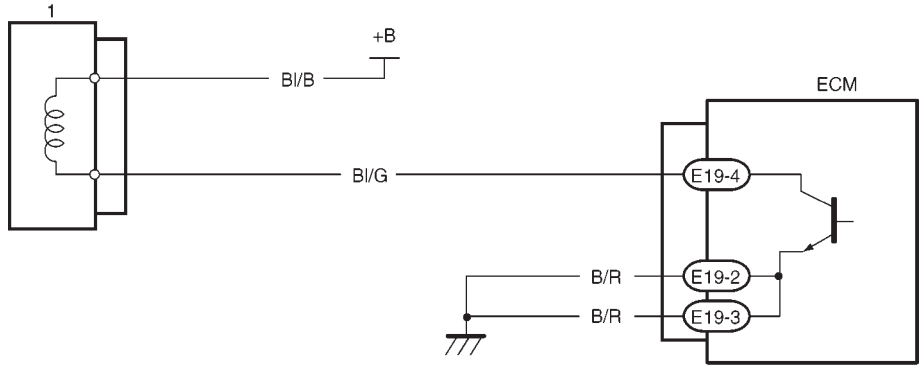

DTC DETECTING CONDITION	POSSIBLE CAUSE
Canister Purge control valve circuit is opened or shorted.	● "Bl/G" circuit open or short ● "Bl/B" circuit open or short ● Canister purge valve malfunction

DTC CONFIRMATION PROCEDURE

1) Clear DTC with ignition switch ON.
2) Select "DTC" mode on scan tool and check DTC.

INSPECTION

STEP	ACTION	YES	NO
1	Check EVAP canister purge valve operation 1) With ignition switch OFF, disconnect coupler from canister purge valve. 2) Check resistance of EVAP canister purge valve. Resistance between two terminals : 30 – 34 Ω at 20°C (68°F) Resistance between terminal and body : 1M Ω or higher Is it as specified?	"Bl/G" circuit open or short.	Replace EVAP canister purge valve.

Fig. 1 for Step 1

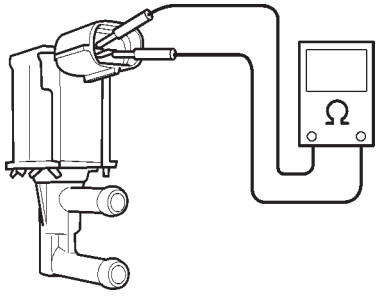

DTC P0481 A/C CONDENSER FAN CONTROL CIRCUIT MALFUNCTION

CIRCUIT DESCRIPTION

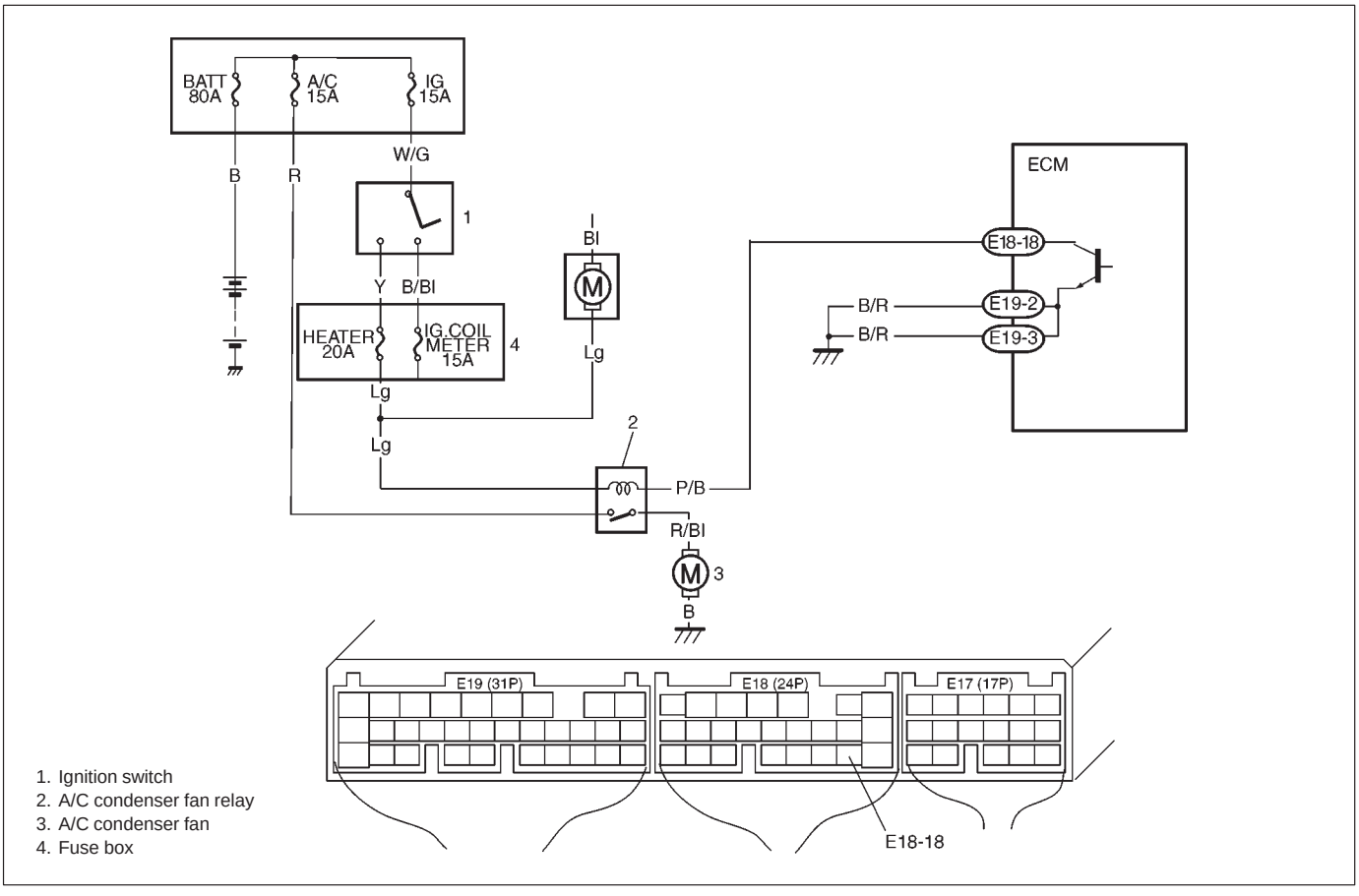

1. Ignition switch
2. A/C condenser fan relay
3. A/C condenser fan
4. Fuse box

DTC DETECTING CONDITION	POSSIBLE CAUSE
● Low voltage at terminal E18-18 when ECM doesn't output A/C ON signal to A/C amplifier or when engine coolant temp. is not 110°C (230°F) or more. ⁎ 2 driving cycle detection logic, continuous monitoring.	● "P/B" or "Lg" circuit open or short ● Condenser fan motor relay malfunction ● ECM malfunction

DTC CONFIRMATION PROCEDURE

1) Turn ignition switch OFF.
2) Clear DTC with ignition switch ON.
3) Start engine ;and then turn both A/C switch and heater blower switch ON for 2 sec or more.
4) Run engine at idle for 5 sec or more which A/C switch and heater blower switch OFF.
5) Check DTC and pending DTC.

DTC P0481

INSPECTION

STEP	ACTION	YES	NO
1	Was “ENGINE DIAG. FLOW TABLE” performed?	Go to Step 2.	Go to “ENGINE DIAG. FLOW TABLE”.
2	Check A/C Condenser Fan Control Relay and its Circuit. 1) Turn ignition switch ON. 2) Check for voltage at terminal E18-18 of ECM connector connected, under following condition. See Fig.1. When A/C switch turns OFF: 10 – 14 V Is voltage as specified?	Intermittent trouble or faulty ECM. Check for intermittent referring to “Intermittent and Poor Connection” in Section 0A.	Go to Step 3.
3	Check A/C Condenser Fan Control Relay. 1) Turn ignition switch OFF and remove A/C cooling fan control relay. 2) Check for proper connection to the relay at “P/B” and “Lg” wire terminals. 3) If OK, then measure resistance between terminals C and D. See Fig.1 and 2. Is it 70 – 110Ω?	“Lg” or “P/B” circuit open or short. If wires and connections are OK, substitute a known-good ECM and recheck.	Replace A/C condenser fan control relay.

Fig. 1 for Step 3

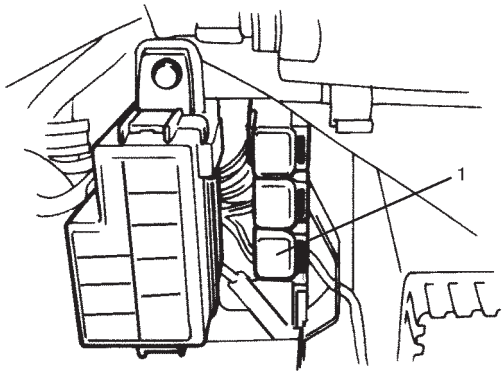

1. A/C condensor fan relay

Fig. 2 for Step 3

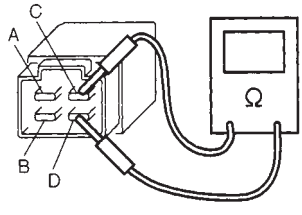

DTC P0500 VEHICLE SPEED SENSOR (VSS) MALFUNCTION (DTC No.16)

CIRCUIT DESCRIPTION

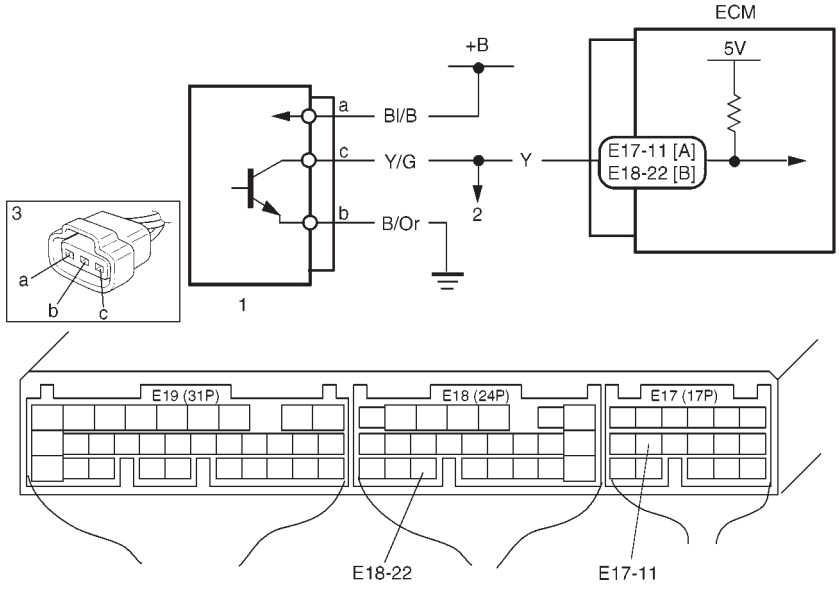

[A]: Case of TYPE A is shown (See NOTE)
[B]: Case of TYPE B is shown (See NOTE)

1. VSS
2. Combination meter
3. VSS connector

NOTE:
For TYPE A and TYPE B, refer to the NOTE in "ECM TERMINAL VOLTAGE VALUES TABLE" for applicable model.

DTC DETECTING CONDITION	POSSIBLE CAUSE
● VSS signal not inputted while vehicle running in "D" range or during fuel cut at deceleration. ⁎ 2 driving cycle detection logic, continuous monitoring	● "B/Or" circuit open ● "Y" or "Bl/B" circuit open or short ● VSS malfunction ● ECM malfunction ● Speedometer malfunction

DTC CONFIRMATION PROCEDURE

WARNING:
- **When performing a road test, select a place where there is no traffic or possibility of a traffic accident and be very careful during testing to avoid occurrence of an accident.**
- **Road test should be carried out with 2 persons, a driver and a tester.**

1) Clear DTC and warm up engine to normal operating temperature.
2) Increase vehicle speed to 50 mph, 80 km/h in 3rd gear or "2" range while observing vehicle speed displayed on scan tool.
3) Release accelerator pedal and with engine brake applied, keep vehicle coasting (fuel cut condition) for 4 sec. or more.
4) Check pending DTC and DTC.

DTC P0500

INSPECTION

STEP	ACTION	YES	NO
1	Was “ENGINE DIAG. FLOW TABLE” performed?	Go to Step 2.	Go to “ENGINE DIAG. FLOW TABLE”.
2	Does speedometer indicate vehicle speed?	Go to Step 3.	Go to Step 5.
3	Check Vehicle Speed Signal. Is vehicle speed displayed on scan tool in step 2) and 3) of DTC confirmation procedure?	Intermittent trouble or faulty ECM. Check for intermittent referring to “Intermittent and Poor Connection” in Section 0A.	Go to Step 4.
4	1) Turn ignition switch to OFF position. 2) Disconnect combination meter connectors. Refer to Section 8. 3) Turn ignition switch to ON position, without running engine. 4) Measure voltage from terminal “c” of VSS connector to ground. Is voltage within 4 – 5 V?	Faulty speedometer.	“Y” or “Y/G” wire open or short. Poor connection of ECM connector terminal. If OK, substitute a known-good ECM and recheck.
5	1) With ignition switch at OFF position, disconnect VSS connector. 2) Turn ignition switch to ON position, without running engine. 3) Measure voltage from terminal “a” to “b” of VSS connector. Is voltage within 10 – 14 V?	Go to Step 6.	“Bl/B” or “B/Or” wire open or short.
6	1) Measure voltage from terminal “c” of VSS connector to ground. Is voltage more than 4 V?	Go to Step 7.	“Y” or “Y/G” wire open or short. Poor connection of ECM connector terminal. If OK, substitute a known-good ECM and recheck.
7	1) Remove VSS. 2) Visually inspect VSS sensor signal rotor for damage. Was any damage found?	Faulty VSS signal rotor.	Poor connection of VSS connector terminal. If OK, substitute a known-good VSS and recheck.

Fig. 1 for Step 5

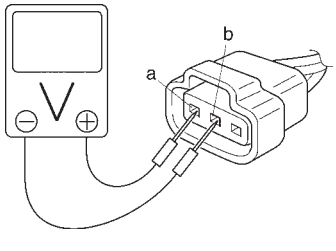

Fig. 2 for Step 4 and Step 6

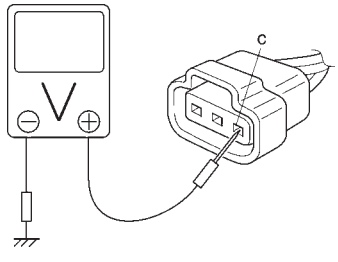

DTC P0505 IDLE CONTROL SYSTEM MALFUNCTION

CIRCUIT DESCRIPTION

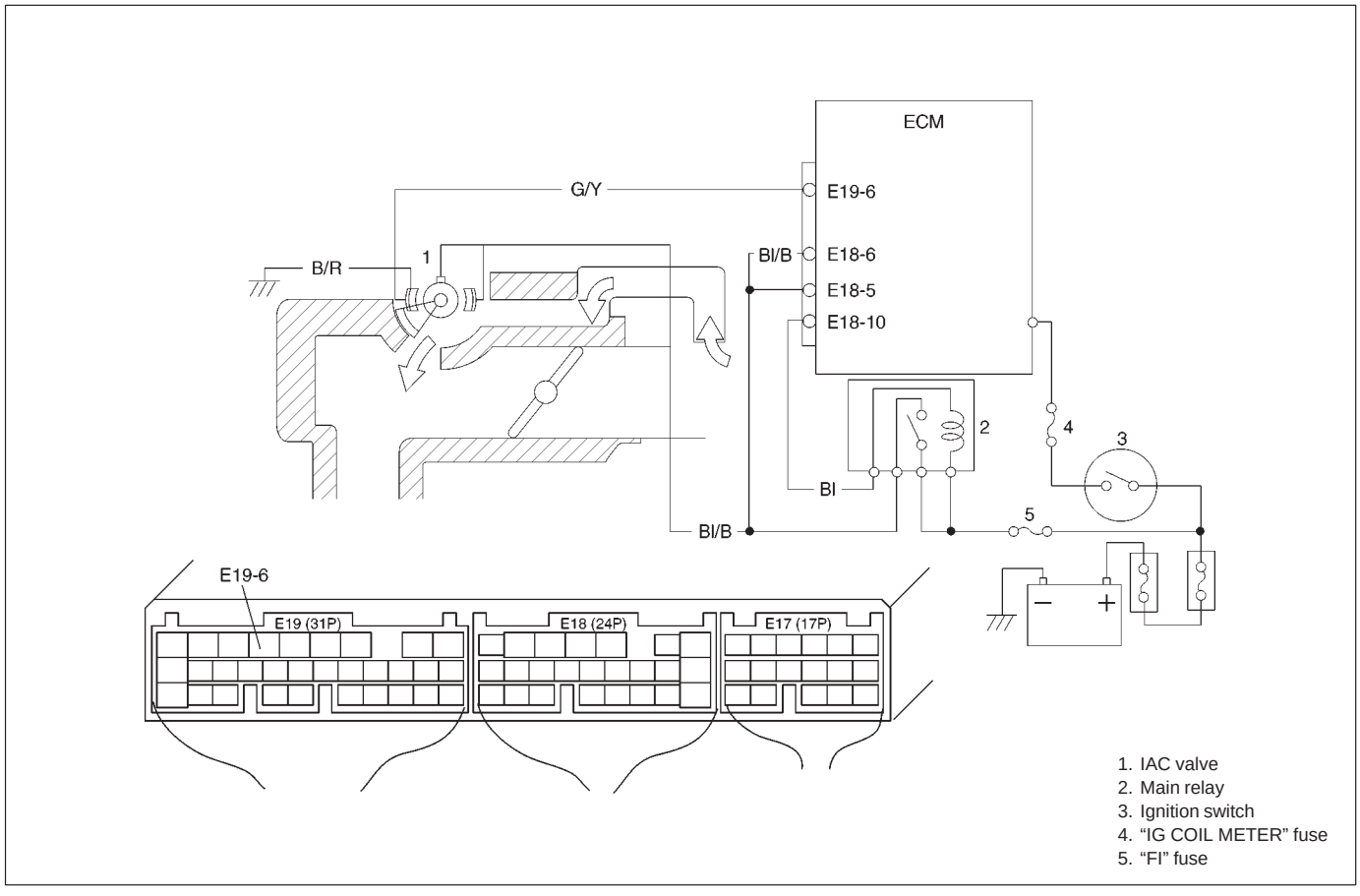

DTC DETECTING CONDITION	POSSIBLE CAUSE
● No closed signal to IAC valve is detected after engine start. ⁎ 2 driving cycle detection logic, continuous monitoring.	● "Bl/B", "G/Y" or "B/R" circuit open or short ● IAC valve malfunction ● ECM malfunction

DTC CONFIRMATION PROCEDURE

1) Turn ignition switch OFF.
2) Clear DTC with ignition switch ON.
3) Start engine and run it at idle for 1 min.
4) Check DTC and pending DTC.

DTC P0505

INSPECTION

STEP	ACTION	YES	NO
1	Was “ENGINE DIAG. FLOW TABLE” performed?	Go to Step 2.	Go to “ENGINE DIAG. FLOW TABLE”.
2	Check Idle Air Control System. When using SUZUKI scan too: 1) Connect SUZUKI scan tool to DLC with ignition switch OFF, set parking brake and block drive wheels. 2) Warm up engine to normal operating temperature. 3) Clear DTC and select “MISC TEST” mode on SUZUKI scan tool. See Fig. 1. Is it possible to control (increase and reduce) engine idle speed by using SUZUKI scan tool? When not using SUZUKI scan tool: 1) Remove IAC valve from throttle boy referring to “IAC Valve Removal” in Section 6E. 2) Check IAC valve for operation referring to “IAC Valve Inspection” in Section 6E. See Fig. 2. Is check result satisfactory?	Intermittent trouble or faulty ECM. Check for intermittent referring to “Intermittent and Poor Connection” in Section 0A.	Go to Step 3.
3	Check Wire Harness for Open and Short. 1) Turn ignition switch OFF. 2) Disconnect IAC valve connector. 3) Check for proper connection to IAC valve at each terminals. 4) If OK, disconnect ECM connector. 5) Check for proper connection to ECM at E19-6 terminal. 6) If OK, check “Bl/B”, “G/Y” and “B/R” circuit for open and short. Are they in good condition?	Replace IAC valve and recheck.	Repair or replace.

Fig. 1 for Step 1

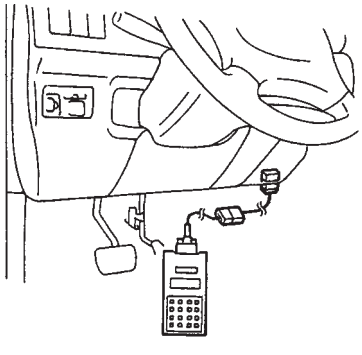

Fig. 2 for Step 2

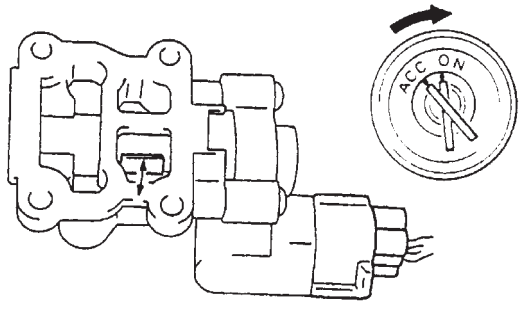

DTC P0601 INTERNAL CONTROL MODULE MEMORY CHECK SUM ERROR (DTC No.71)

DTC DETECTING CONDITION	POSSIBLE CAUSE
DTC P0601: Data write error (or check sum error) when written into ECM ⁎ 2 driving cycle detection logic, continuous monitoring.	ECM

DTC CONFIRMATION PROCEDURE

1) Turn ignition switch OFF.
2) Clear DTC with ignition switch ON and then turn ignition switch OFF.
3) Start engine and run it at idle if possible.
4) Check pending DTC in “ON BOARD TEST” or “PENDING DTC” mode and DTC in “DTC” mode.

INSPECTION

Substitute a known-good ECM and recheck.

DTC P1450 BAROMETRIC PRESSURE SENSOR LOW/HIGH INPUT
DTC P1451 BAROMETRIC PRESSURE SENSOR PERFORMANCE PROBLEM

WIRING DIAGRAM/CIRCUIT DESCRIPTION

Barometric pressure sensor is installed in ECM.

DTC DETECTING CONDITION	POSSIBLE CAUSE
DTC P1450: ● Barometric pressure sensor voltage is 4.7 V or higher, or 1.6 V or lower	● ECM (barometric pressure sensor) malfunction
DTC P1451: ● Vehicle stopped ● Engine cranking ● Difference between barometric pressure and intake manifold absolute pressure is 26 kPa, 200 mmHg or more. ● Difference between intake manifold absolute pressure at engine start and pressure after engine start is less than 1.3 kPa, 10 mmHg. ⁎ 2 driving cycle detection logic, monitoring once/1 driving.	● ECM (barometric pressure sensor) malfunction

DTC CONFIRMATION PROCEDURE

1) Turn ignition switch OFF.
2) Clear DTC with ignition switch ON.
3) Turn ignition switch ON for 2 sec., crank engine for 2 sec. and run it at idle for 1 min.
4) Check pending DTC in “ON BOARD TEST” or “PENDING DTC” mode and DTC in “DTC” mode.

INSPECTION

DTC P1450:

Substitute a known-good ECM and recheck.

DTC P1451:

NOTE:
Note that atmospheric pressure varies depending on weather conditions as well as altitude. Take that into consideration when performing these check.

STEP	ACTION	YES	NO
1	1) Connect scan tool to DLC with ignition switch OFF. 2) Turn ignition switch ON and select “DATA LIST” mode on scan tool. 3) Check manifold absolute pressure. See Fig. 1. Is it barometric pressure (approx. 100 kPa, 760 mmHg) at sea level?	Substitute a known-good ECM and recheck.	Go to Step 2.

Fig. 1 for Step 1

When using SUZUKI scan tool:

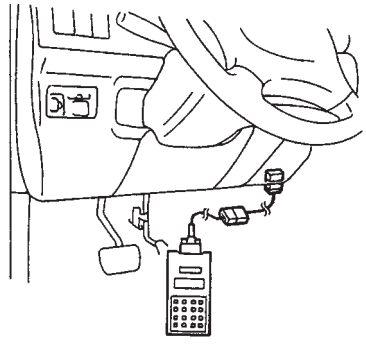

<table>
<tr><th>STEP</th><th>ACTION</th><th>YES</th><th>NO</th></tr>
<tr><td>2</td><td>Check MAP Sensor
1) Remove MAP sensor from intake manifold and connect vacuum pump gauge to MAP sensor. See Fig. 2.
2) Connect scan tool to DLC and turn ignition switch ON.
3) Check intake manifold absolute pressure displayed on scan tool under following conditions.
<table><tr><th>Applying Vacuum</th><th>Displayed Value on Scan Tool</th></tr><tr><td>0</td><td>Barometric pressure
(Approx. 100 kPa, 760 mmHg)</td></tr><tr><td>27 kPa
200 mmHg</td><td>Barometric pressure –27 kPa
(Approx. 73 kPa, 560 mmHg</td></tr><tr><td>67 kPa
500 mmHg</td><td>Barometric pressure –67 kPa
(Approx. 33 kPa, 260 mmHg)</td></tr></table>Is check result satisfactory?</td><td>Check air intake system for air being drawn in and engine compression.
If OK, then substitute a known-good ECM and recheck.</td><td>Replace MAP sensor.</td></tr>
</table>

Fig. 2 for Step 2

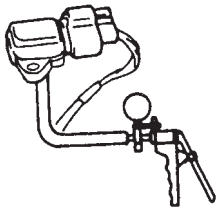

DTC P1500 ENGINE STARTER SIGNAL CIRCUIT MALFUNCTION

CIRCUIT DESCRIPTION

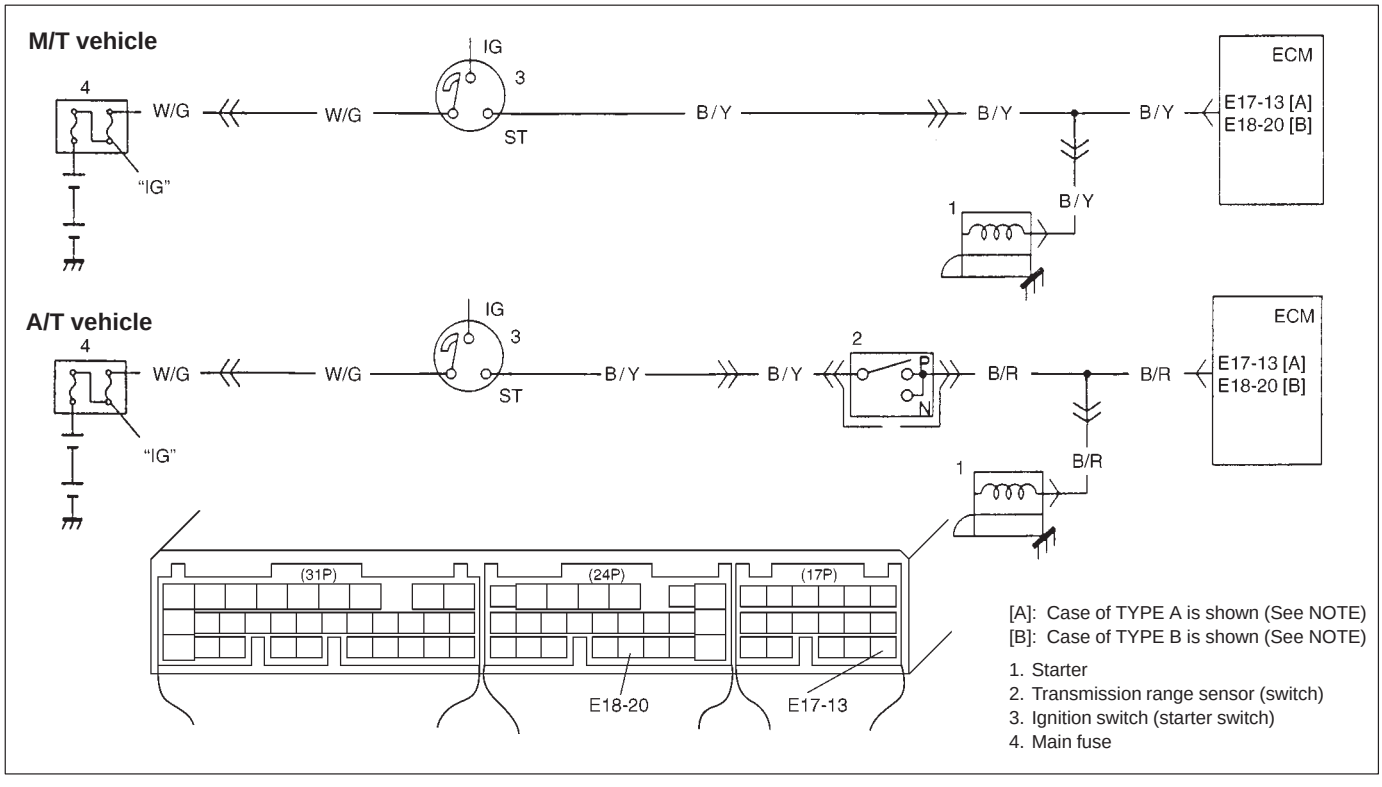

NOTE:
For TYPE A and TYPE B, refer to the NOTE in "ECM TERMINAL VOLTAGE VALUES TABLE" for applicable model.

DTC DETECTING CONDITION	POSSIBLE CAUSE
● Low voltage at terminal E18-17 when cranking engine or ● High voltage at terminal E18-17 after starting engine. ⁎ 2 driving cycle detection logic, continuous monitoring.	● "B/Y" circuit open ● ECM malfunction

DTC CONFIRMATION PROCEDURE

1) Turn ignition switch OFF.
2) Clear DTC with ignition switch ON, crank engine and run it at idle for 3 min.
3) Check pending DTC in "ON BOARD TEST" or "PENDING DTC" mode and DTC in "DTC" mode.

INSPECTION

STEP	ACTION	YES	NO
1	Was "ENGINE DIAG. FLOW TABLE" performed?	Go to Step 2.	Go to "ENGINE DIAG. FLOW TABLE".
2	Check for voltage at terminal E17-13 (Case of TYPE A) (See NOTE) or E18-20 (Case of TYPE B) (See NOTE) of ECM connector connected, under following condition. While engine cranking : 6 – 10 V After starting engine : 0 V Is voltage as specified?	Poor E17-13 (Case of TYPE A) (See NOTE) or E18-20 (Case of TYPE B) (See NOTE) connection or intermittent trouble. Check for intermittent referring to "Intermittent and Poor Connection" in Section 0A. If wire and connections are OK, substitute a known-good ECM and recheck.	"B/Y" or "B/R" circuit open.

DTC P1510 ECM BACK-UP POWER SUPPLY MALFUNCTION

CIRCUIT DESCRIPTION

1. Main fuse
2. Fuse box

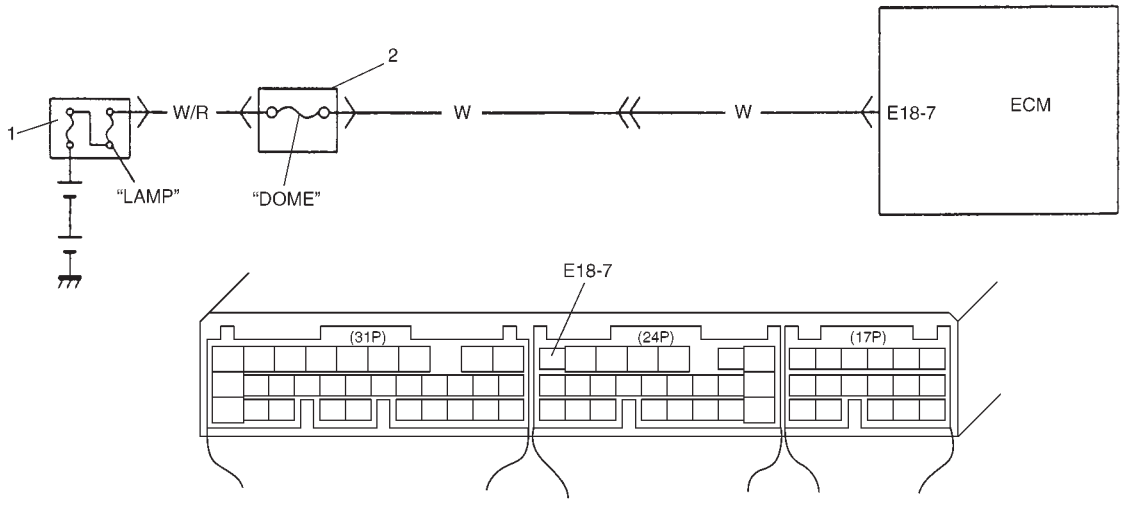

Battery voltage is supplied so that diagnostic trouble code memory, values for engine control learned by ECM, etc. are kept in ECM even when the ignition switch is turned OFF.

DTC DETECTING CONDITION	POSSIBLE CAUSE
● Low voltage at terminal E18-7 after starting engine.	● "W" circuit open ● ECM malfunction

DTC CONFIRMATION PROCEDURE

1) Clear DTC, start engine and run it at idle for 1 min.
2) Select "DTC" mode on scan tool and check DTC.

INSPECTION

STEP	ACTION	YES	NO
1	Check for voltage at terminal E18-7 of ECM connector connected, under each condition, ignition switch OFF and engine running. Is it 10 – 14 V at each condition?	Poor E18-7 connection or intermittent trouble. Check for intermittent referring to "Intermittent and Poor Connection" in Section 0A. If wire and connections are OK, substitute a known- good ECM and recheck.	"W" circuit open.

DTC P1570 ABS SIGNAL CIRCUIT MALFUNCTION (DTC No.21)

CIRCUIT DESCRIPTION

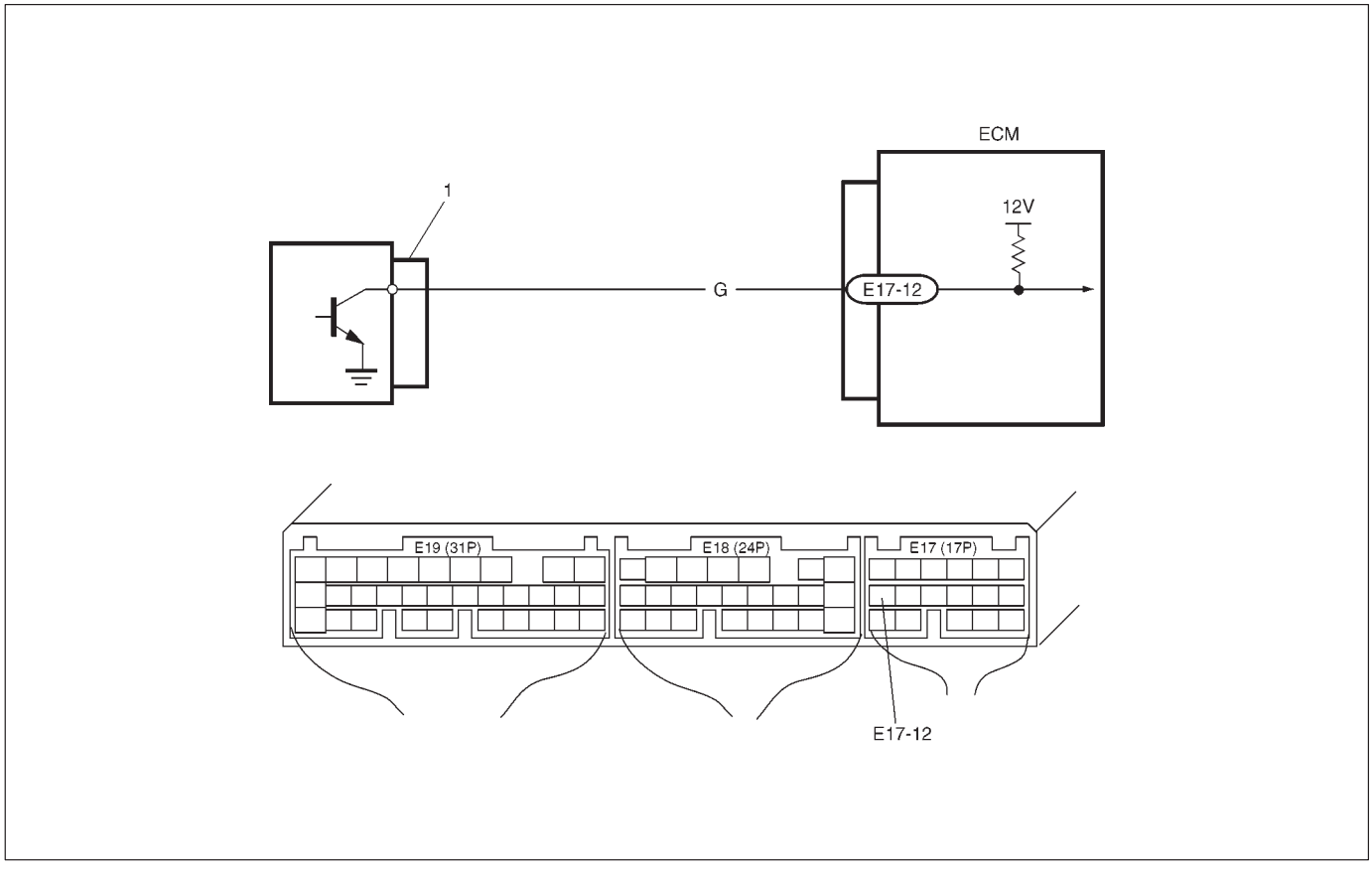

DTC DETECTING CONDITION	POSSIBLE CAUSE
● ABS signal input is low when engine start.	● ABS signal circuit short to ground ● ABS control module

DTC CONFIRMATION PROCEDURE

1) Clear DTC, start engine and keep it at idle for 1 min.
2) Select “DTC” mode on scan tool and check DTC.

INSPECTION

STEP	ACTION	YES	NO
1	Was “ENGINE DIAG. FLOW TABLE” performed?	Go to Step 2.	Go to “ENGINE DIAG. FLOW TABLE”.
2	1) With the ignition switch ON position, check voltage between E17-12 terminal of ECM coupler and ground. Is voltage within 10 – 14 V?	Intermittent trouble. If OK, substitute a known-good ECM and recheck.	Go to Step 3.
3	1) Check “G” wire for shorted to ground circuit. Is “G” wire in good condition?	Go to Step 4.	Repair or replace.
4	1) Disconnect coupler of ABS control module. 2) Clear DTC. 3) Start engine and check DTC. Is DTC P1570 (No.21) detected?	Substitute a known-good ECM and recheck.	Substitute a known-good ABS control module and recheck.

DTC P1600 SERIAL COMMUNICATION PROBLEM BETWEEN ECM AND TCM

CIRCUIT DESCRIPTION

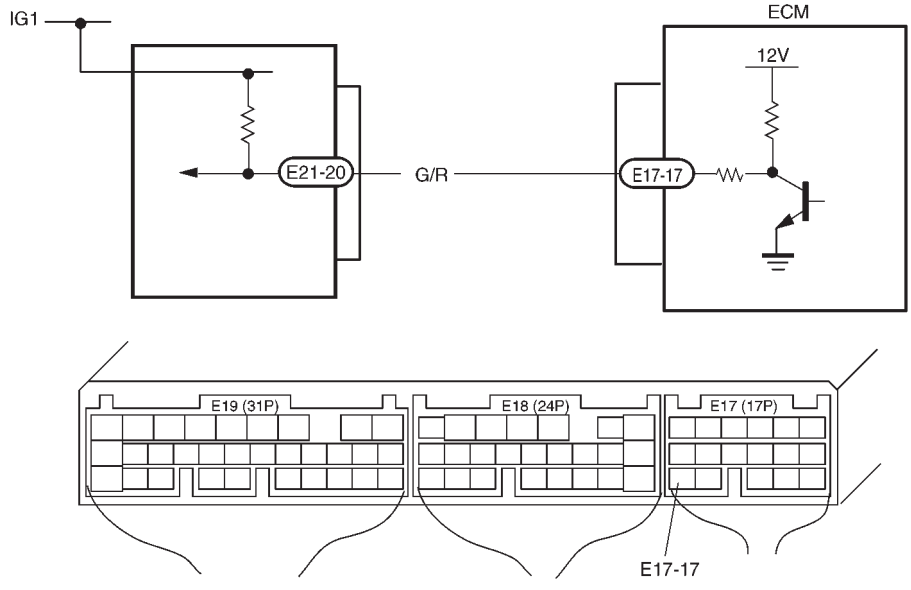

The serial data line is pulled up to about 12 V by ECM and TCM transmits information to ECM through it by controlling its grounding.
TCM constantly sends information while ignition switch is ON as to whether judgement was made or not with respect to all detectable DTCs as well as whether or not abnormality exists after judgement.

DTC DETECTING CONDITION	POSSIBLE CAUSE
No signal inputted from TCM to ECM or check sum error while engine running	● "G/R" circuit open or short ● TCM power or ground circuit open. ● TCM malfunction ● ECM malfunction

DTC CONFIRMATION PROCEDURE

1) Turn ignition switch OFF.
2) Clear DTC with ignition switch ON.
3) Start engine and run it at idle for 1 min.
4) Select "DTC" mode on scan tool and check DTC.

DTC P1600

INSPECTION

STEP	ACTION	YES	NO
1	Was “ENGINE DIAG. FLOW TABLE” performed?	Go to Step 2.	Go to “ENGINE DIAG. FLOW TABLE”.
2	Check signal voltage. Check voltage between terminal E17-17 and body ground with ignition switch ON. Does it change between 0 – 12 V? See Fig. 1.	Intermittent trouble or faulty ECM or TCM. Check for intermittent trouble referring to “Intermittent and poor connection” in Section 0A.	Go to Step 3.
3	Is it about 12 V at Step 2?	“B/R” wire open, poor E21-11 connection or TCM power or ground circuit open. If wires and connections are OK, substitute a known-good TCM and recheck.	Go to Step 4.
4	Check signal circuit. 1) Disconnect TCM coupler with ignition switch OFF. 2) Check voltage between E21-20 terminal and body ground with ignition switch ON. See Fig. 2. Is it about 12 V?	Check TCM power and ground circuit for open. If OK, substitute a known-good TCM and recheck.	“B/R” wire shorted to ground or poor E17-17 terminal connection. If wire and connection are OK, substitute a known-good ECM and recheck.

Fig. 1 for Step 2

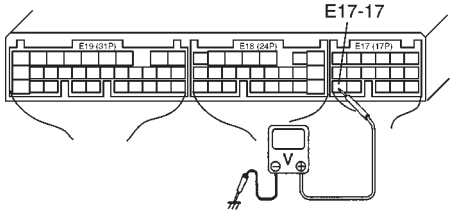

Fig. 2 for Step 4

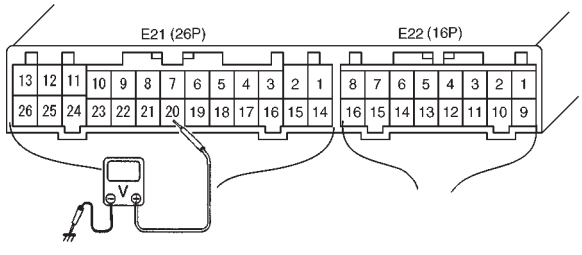

DTC P1717 A/T DRIVE RANGE (PARK/NEUTRAL POSITION) SIGNAL CIRCUIT MALFUNCTION

CIRCUIT DESCRIPTION

1. Transmission range switch
2. From ignition switch
3. TCM

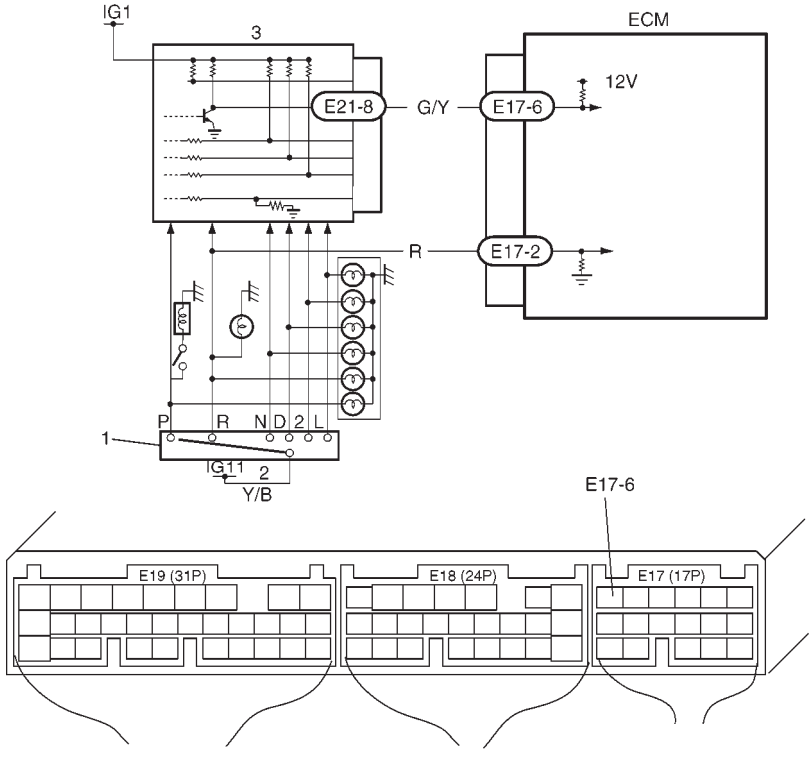

DTC DETECTING CONDITION	POSSIBLE CAUSE
● "D" range signal not inputted (Park/Neutral position signal inputted) to ECM while vehicle running ※ 2 driving cycle detection logic, Continuous monitoring.	● "G/Y" circuit open ● Transmission range switch malfunction ● "R", "D", "2" or "L" range signal circuit open ● TCM power or ground circuit open ● TCM malfunction ● ECM malfunction

DTC CONFIRMATION PROCEDURE

WARNING:
- **When performing a road test, select a place where there is no traffic or possibility of a traffic accident and be very careful during testing to avoid occurrence of an accident.**
- **Road test should be carried out with 2 persons, a driver and a tester.**

1) Turn ignition switch OFF.
2) Clear DTC with ignition switch ON.
3) Start engine and shift selector lever to "D" range.
4) Increase vehicle speed to higher than 20 mph, 32 km/h and then stop vehicle.
5) Repeat above step 4) 9 times.
6) Shift selector lever to "2" range and repeat above step 4) and 5).
7) Shift selector lever to "L" range and repeat above step 4) and 5).
8) Check DTC in "DTC" mode and pending DTC in "ON BOARD TEST" or "PENDING DTC" mode.

DTC P1717

INSPECTION

STEP	ACTION	YES	NO
1	Was “ENGINE DIAG. FLOW TABLE” performed?	Go to Step 2.	Go to “ENGINE DIAG. FLOW TABLE”.
2	Check PNP signal (“D” range signal). When using SUZUKI scan tool: 1) Connect SUZUKI scan tool to DLC with ignition switch OFF. See Fig. 1. 2) Turn ignition switch ON and check PNP signal (“P/N” or “D” range) on display when shifting selector lever to each range. When not using SUZUKI scan tool: 1) Turn ignition switch ON. 2) Check voltage at terminal E17-6 of ECM connector connected. See Fig. 2. Is “D” range on display (Is 0 – 1 V indicated) no matter which of “R”, “D”, “2” and “L” range positions selector lever may be at? See Fig. 3.	Intermittent trouble or faulty ECM. Check for intermittent referring to “Intermittent and poor connection” in Section 0A.	Go to Step 3.
3	Is “P/N range on display (Is 10 – 14 V indicated) when selector lever is at one of “R”, “D”, “2” and “L” range positions only?	Check transmission range switch and circuits referring to section 7B1.	Go to Step 4.
4	Check PNP signal circuit. 1) Turn ignition switch OFF. 2) Disconnect TCM connectors. 3) Check for proper connection to TCM at terminal E21-5. 4) If OK, then check voltage at terminal E21-8 in TCM connector disconnected, with ignition switch ON. Is it 10 – 14 V? See Fig. 4	“Y/B” circuit open, poor transmission range sensor connector connection, select cable maladjusted, transmission range sensor maladjusted or transmission range sensor malfunction. If all above are OK, substitute a known-good TCM and recheck.	“G/Y” circuit open or poor E17-6 connection. If wire and connection are OK, substitute a known-good ECM and recheck.

Fig. 1 for Step 2

When using SUZUKI scan tool:

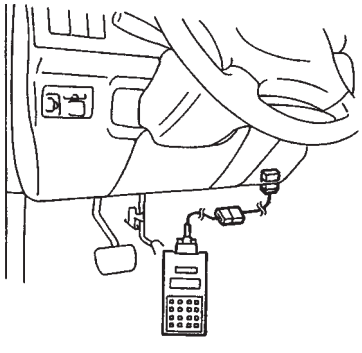

Fig. 2 for Step 2

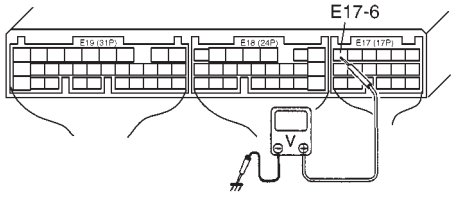

Fig. 3 for Step 2

Scan tool or voltmeter / Selector lever position	SUZUKI SCAN TOOL DISPLAY	VOLTAGE AT E17-6
“P” and “N” range	P/N range	10 – 14V
“R”, “D”, “2” and “L” range	D range	0 – 1V

Fig. 4 for Step 4

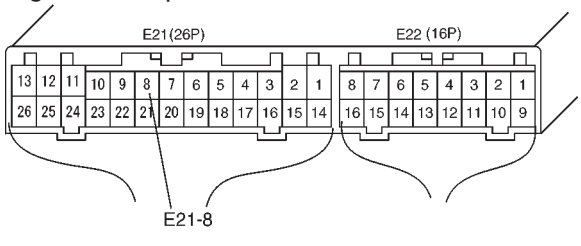

TABLE B-1 FUEL INJECTOR CIRCUIT CHECK

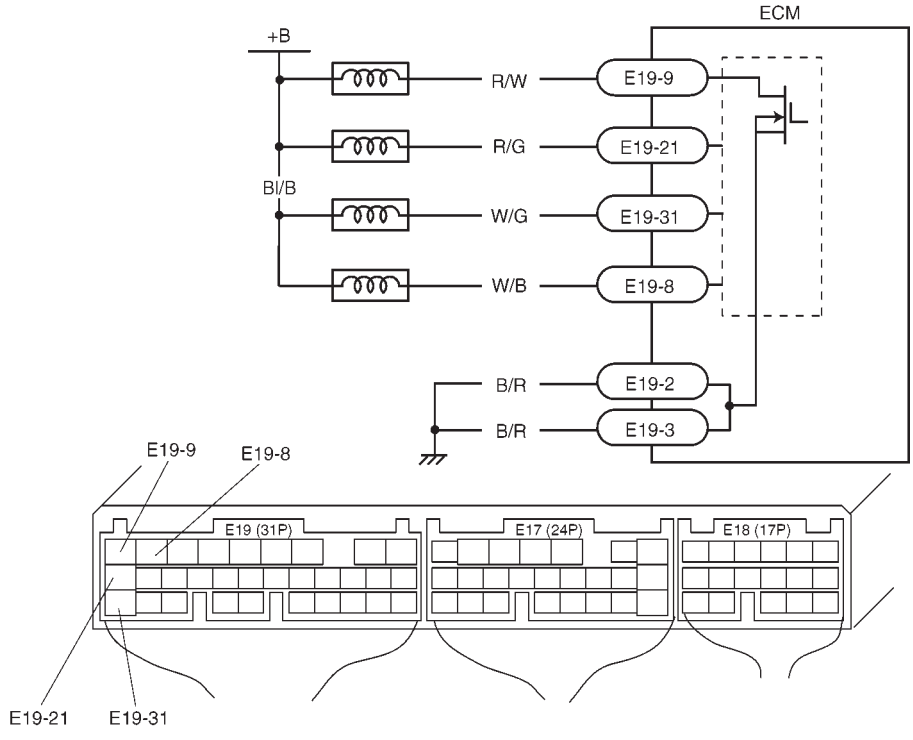

INSPECTION

STEP	ACTION	YES	NO
1	Was “ENGINE DIAG. FLOW TABLE” performed?	Go to Step 2.	Go to “ENGINE DIAG. FLOW TABLE”.
2	Check Injector for Operating Sound. Using sound scope, check each injector for operating sound at engine cranking. Do all 4 injector make operating sound?	Fuel injector circuit is in good condition.	Go to Step 3.
3	Dose none of 4 injectors make operating sound at Step 2?	Go to Step 4.	Check coupler connection and wire harness of injector not making operating sound and injector it-self (Refer to Section 6E).
4	Check power circuit of injectors for open and short. Is it normal?	Check all 4 injectors for resistance respectively. If resistance is OK, substitute a known-good ECM and recheck.	Power circuit open or short.

TABLE B-2 FUEL PUMP AND ITS CIRCUIT CHECK

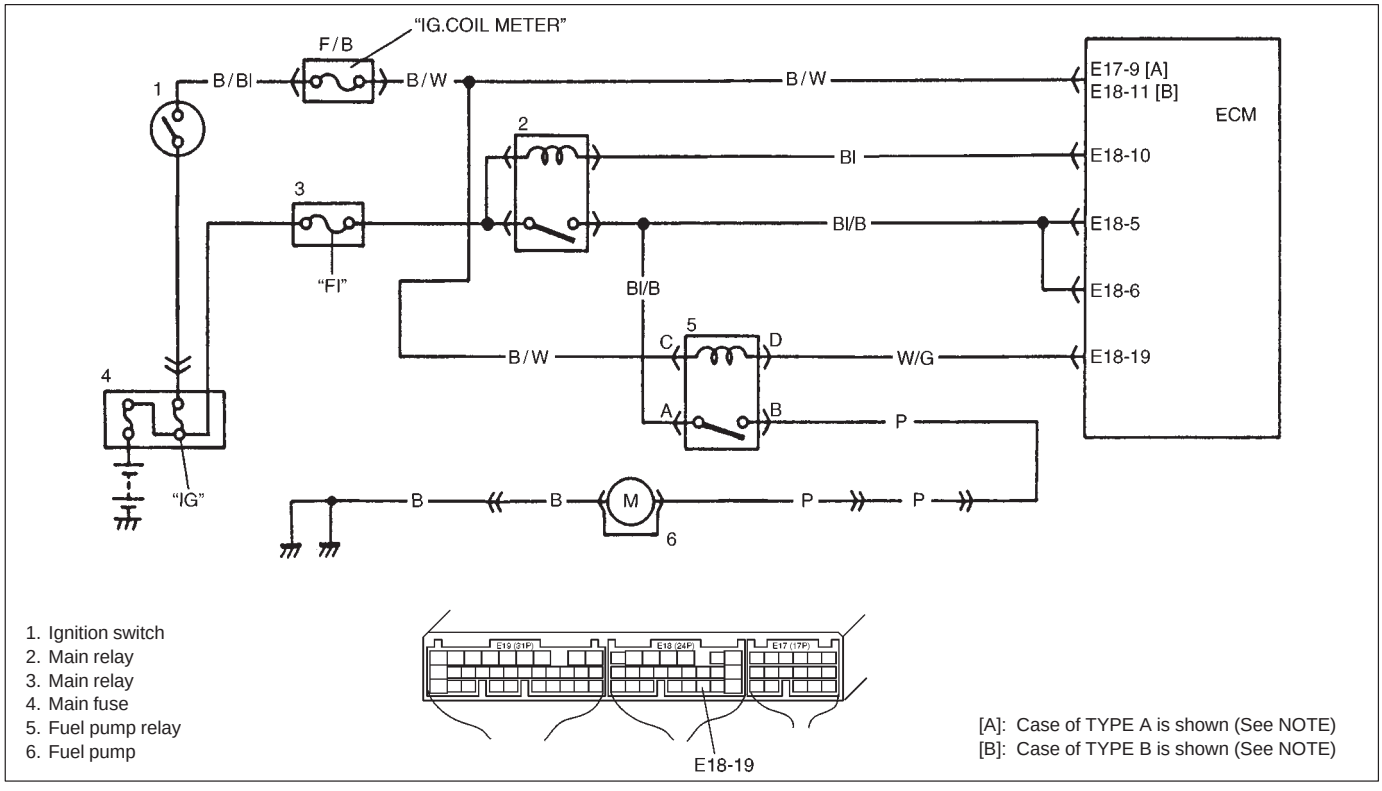

NOTE:

For TYPE A and TYPE B, refer to the NOTE in "ECM TERMINAL VOLTAGE VALUES TABLE" for applicable model.

INSPECTION

STEP	ACTION	YES	NO
1	Was "ENGINE DIAG. FLOW TABLE" performed?	Go to Step 2.	Go to "ENGINE DIAG. FLOW TABLE".
2	Check Fuel Pump Control System for Operation. See Fig. 1. Is fuel pump heard to operate for 2 sec. after ignition switch ON?	Fuel pump circuit is in good condition.	Go to Step 3.
3	Check Fuel Pump for Operation. 1) Remove fuel pump relay from relay box with ignition switch OFF. 2) Check for proper connection to relay at each terminals. 3) If OK, using service wire, connect terminals "A" and "B" of relay connector. See Fig. 2. **CAUTION: Check to make sure that connection is made between correct terminals. Wrong connection can cause damage to ECM, wire harness, etc.** Is fuel pump heard to operate at ignition switch ON?	Go to Step 4.	"P", "B" or "Bl/B" circuit open or fuel pump malfunction.
4	Check Fuel Pump Relay for Operation. 1) Check resistance between each two terminals of fuel pump relay. See Fig.3. Between terminals "A" and "B": Infinity Between terminals "C" and "D": 100 – 150 Ω 2) Check that there is continuity between terminals "A" and "B" when battery is connected to terminals "C" and "D". See Fig. 3. Is fuel pump relay in good condition?	"W/G" circuit open or poor E18-19 connection. If wire and connection are OK, substitute a known-good ECM and recheck.	Replace fuel pump relay.

Fig. 1 for Step 2

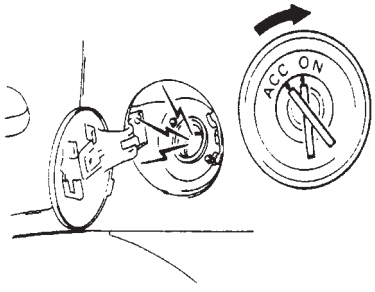

Fig. 2 for Step 3

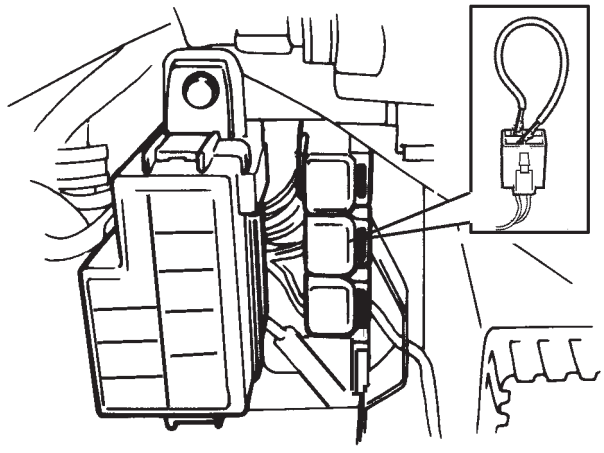

Fig. 3 for Step 4

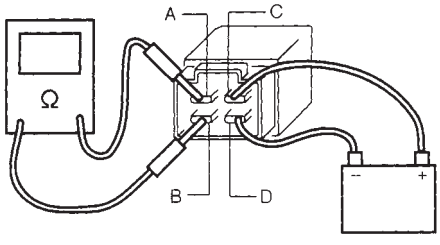

TABLE B-3 FUEL PRESSURE CHECK

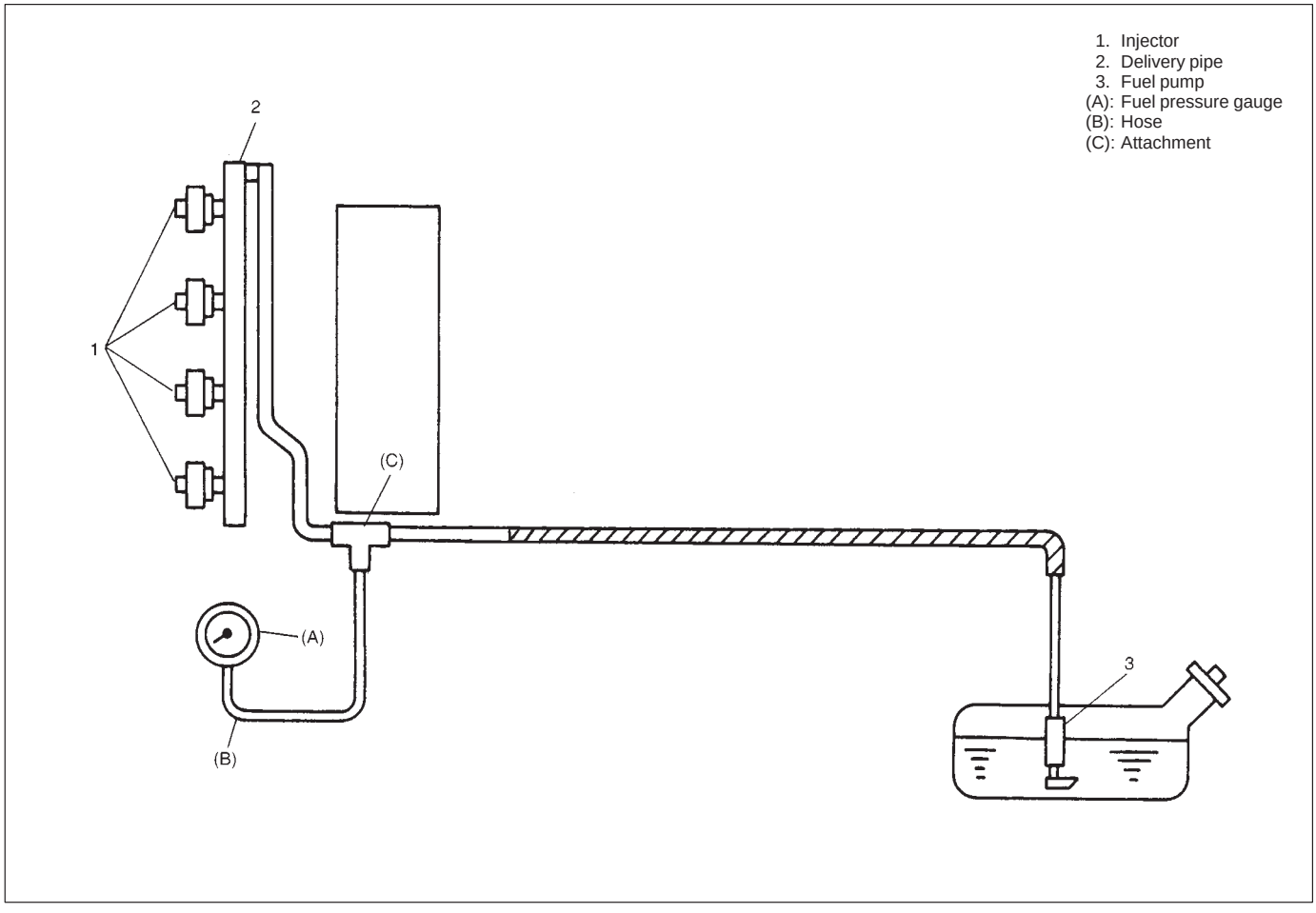

INSPECTION

STEP	ACTION	YES	NO
1	Check Fuel Pressure (Refer to Section 6E for details). 1) Release fuel pressure from fuel feed line. 2) Install fuel pressure gauge. 3) Check fuel pressure by repeating ignition switch ON and OFF. See Fig. 1. Is fuel pressure then 270 – 310 kPa (2.7 – 3.1 kg/cm^2, 38.4 – 44.0 psi)?	Go to Step 2.	Go to Step 4.
2	Is 250 kPa (2.5 kg/cm^2, 35.6 psi) or higher fuel pressure retained for 1 minute after fuel pump is stopped at Step 1?	Normal fuel pressure.	Go to Step 3.
3	Is there fuel leakage from fuel feed line hose, pipe or their joint?	Fuel leakage from hose, pipe or joint.	Faulty fuel pressure regulator.
4	Was fuel pressure higher than spec. in Step 1?	Faulty fuel pressure regulator.	Clogged fuel filter, Restricted fuel feed hose or pipe, Faulty fuel pump or Fuel leakage from hose connection in fuel tank.

Fig. 1 for Step 1

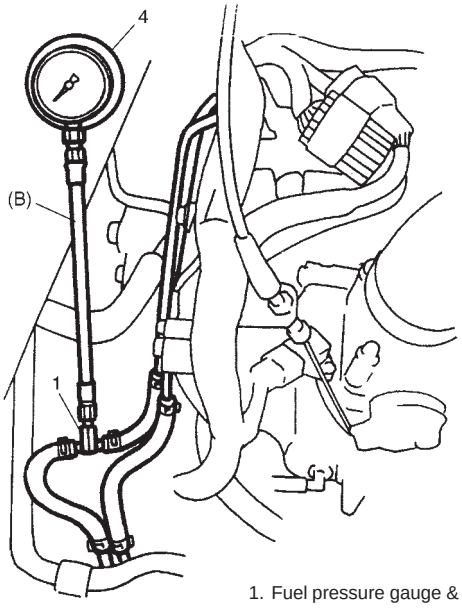

1. Fuel pressure gauge & 3way joint

TABLE B-4 IDLE AIR CONTROL SYSTEM CHECK

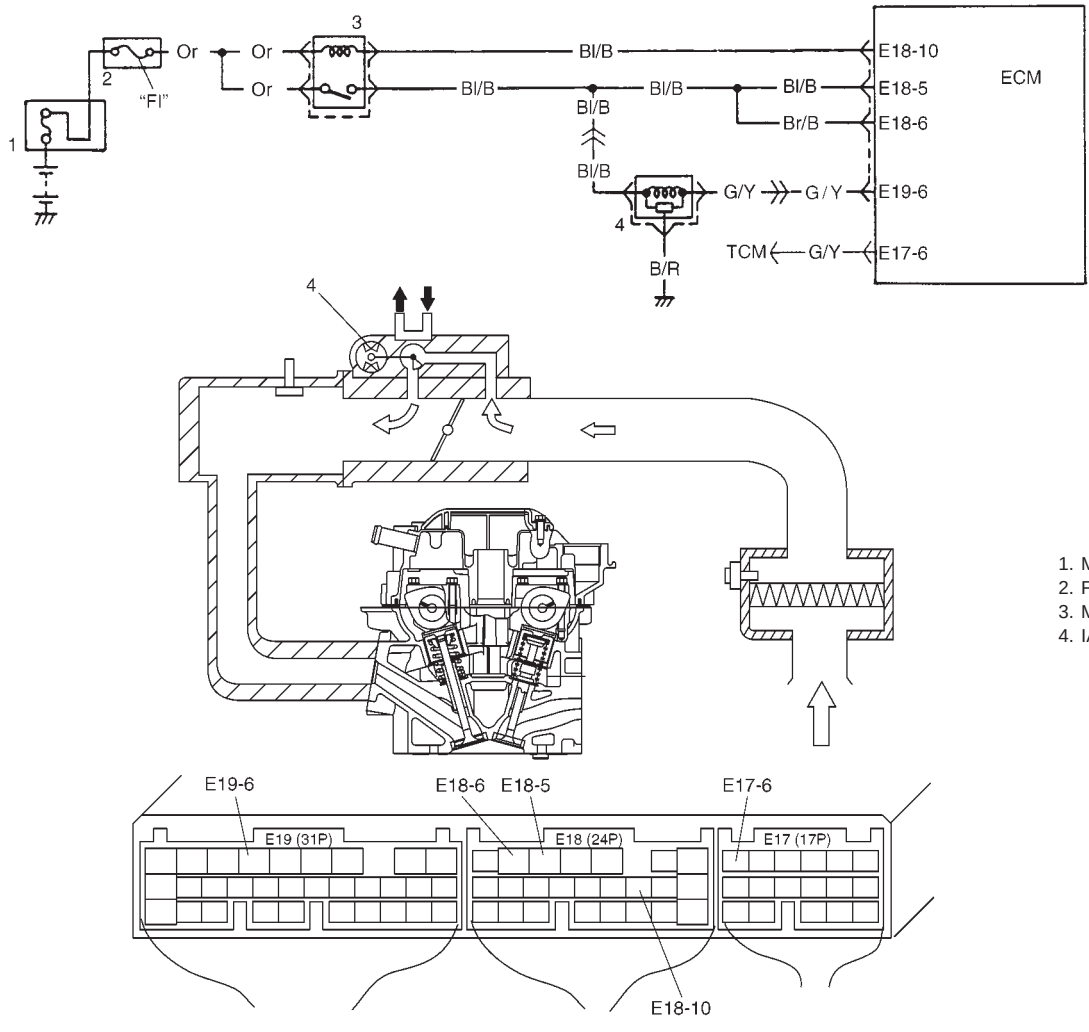

INSPECTION

STEP	ACTION	YES	NO
1	Check engine idle speed and IAC duty referring to "Idle Speed/IAC Duty Inspection" in Section 6E. Is idle speed within specification?	Go to Step 2.	Go to Step 4.
2	Is IAC duty within specification in Step 1?	Go to Step 3.	Check for followings: – Vacuum leak – EVAP canister purge control system – Clog of IAC air passage – Accessory engine load – Closed throttle position (TP sensor) – Stuck of PCV valve
3	Is engine idle speed kept specified speed even with headlight ON?	System is in good condition.	Check IAC system for operation referring to Step 2 of DTC P0505 Diag. Flow Table.
4	Was idle speed higher than specification in Step 1?	Go to Step 5.	Go to Step 8.
5	Check A/C (input) signal circuit referring to Step 1 of Table B-5 A/C Signal Circuit Check, if equipped. (A/C signal can be also checked by using SUZUKI scan tool.) Is it in good condition?	Go to Step 6.	Repair or replace A/C signal circuit or A/C system.

STEP	ACTION	YES	NO
6	Check IAC system referring to Step 2 of DTC P0505 Diag. Flow Table. Is check result satisfactory?	Go to Step 7.	Go to Step 3 of DTC P0505 Diag. Flow Table.
7	Was IAC duty less than about 3% (or more than about 97% for OFF duty meter) in Step 1 of this table?	Check abnormal air inhaling from air intake system, PCV valve and EVAP canister purge control system.	Check TP sensor (closed throttle position) and ECT sensor for performance. If sensors are OK, substitute a known-good ECM.
8	Check PNP signal (“D” range signal). When using SUZUKI scan tool: 1) Connect SUZUKI scan tool to DLC with ignition switch OFF. See Fig. 1. 2) Turn ignition switch ON and check PNP signal (“P/N” and “D” range) on display when shifting selector lever to each range. When not using SUZUKI scan tool: 1) Turn ignition switch ON. 2) Check voltage at terminal E17-6 of ECM connector connected. See Fig. 1. Is “D” range on display (Is 0 – 1 V indicated) no matter which of “R”, “D”, “2” and “L” range positions selector lever may be at? Is “P/N” range on display (Is 10 – 14 V indicated) when selector lever is at one of “R”, “D”, “2” and “L” range position only? See Fig. 2.	Go to Step 9.	Repair or replace.
9	Check IAC system referring to Step 2 of DTC P0505 Diag. Flow Table. Is check result satisfactory?	Go to Step 10.	Go to Step 3 of DTC P0505 Diag. Flow Table.
10	Was IAC duty more than about 30% or ⁎40% (or less than 70% or ⁎60% for OFF duty meter) in Step 1 of this table? **NOTE:** **Duty value with (⁎) are applicable to vehicle used at high altitude (higher than 2000 m or 6560 ft).**	Check parts or system which can cause engine low idle. – Accessory engine load – Clog of air passage – Etc.	Substitute a known-good ECM and recheck.

Fig. 1 for Step 8

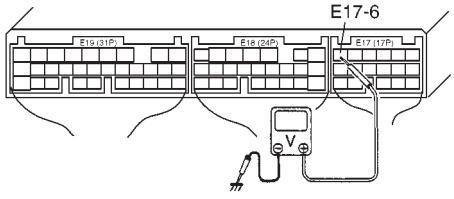

Fig. 2 for Step 8

Scan tool or voltmeter / Selector lever position	SUZUKI SCAN TOOL DISPLAY	VOLTAGE AT E17-6
"P" and "N" range	P/N range	10 – 14V
"R", "D", "2" and "L" range	D range	0 – 1V

TABLE B-5 A/C SIGNAL CIRCUITS CHECK (VEHICLE WITH A/C)

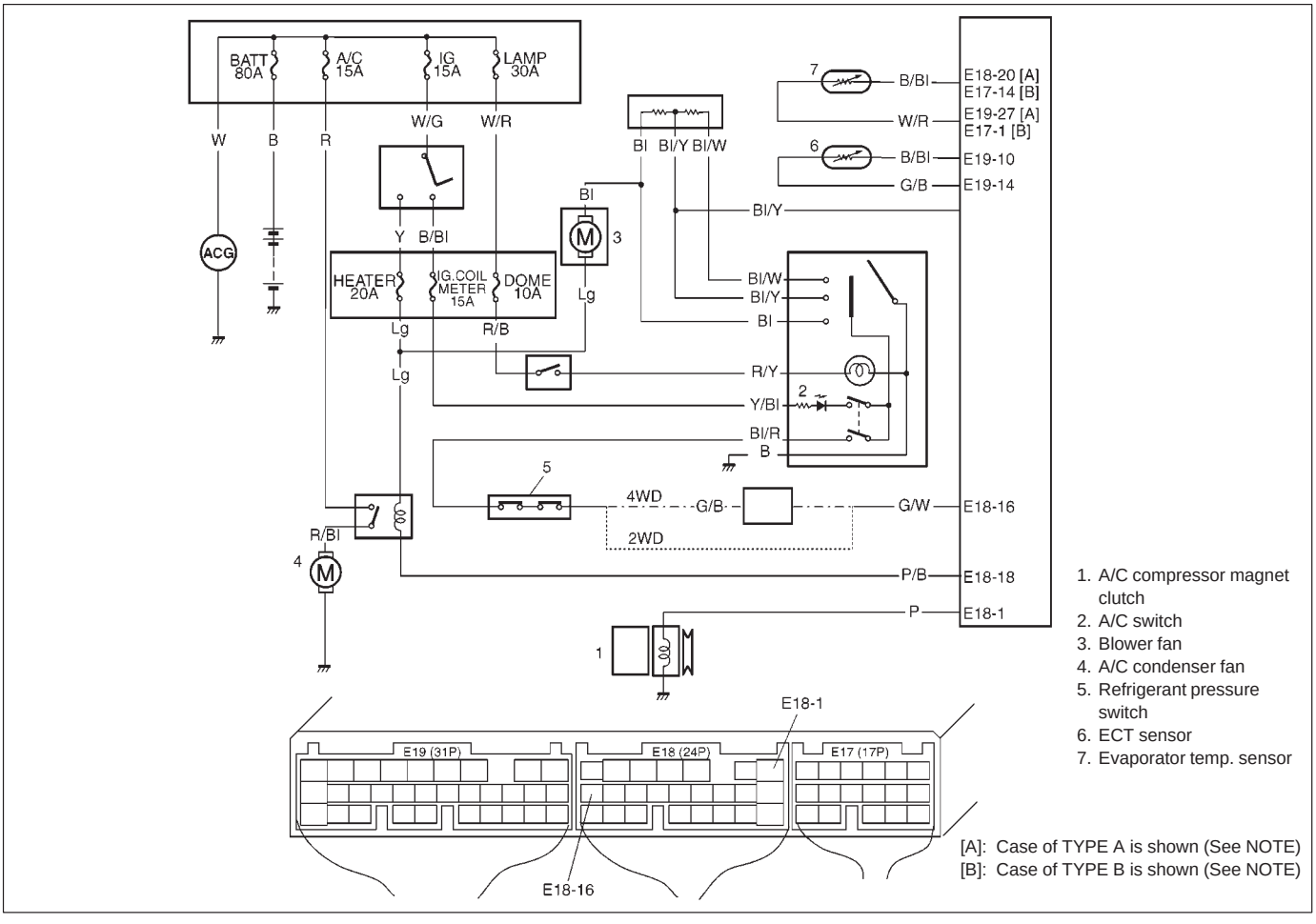

NOTE:

For TYPE A and TYPE B, refer to the NOTE in "ECM TERMINAL VOLTAGE VALUES TABLE" for applicable model.

INSPECTION

STEP	ACTION	YES	NO
1	Check evaporator temp. sensor. 1) Disconnect ECM connectors with ignition switch at OFF position. 2) Check resistance between E19-14 terminal and E19-10 terminal. 3) Is it within specification? Reference value (Refer to characteristic curve below) At 0°C 6.3 – 6.9 kΩ At 25°C 1.8 – 2.2 kΩ	Go to Step 2.	Faulty A/C evaporator thermistor or its circuit.
2	Check A/C switch circuit. 1) Check voltage at E18-16 terminal under each condition given in table below. Ignition switch ON, A/C switch OFF: 10 – 14V Ignition switch ON, A/C switch ON: 0 – 1V 2) Is check result satisfactory?	Go to Step 3.	● "G/W" wire open or short ● Poor E18-16 terminal connection If wire and connection are OK, substitute a known-good ECM and recheck. Go to Step 3.

<table>
<tr><th>STEP</th><th>ACTION</th><th>YES</th><th>NO</th></tr>
<tr><td>3</td><td>Check A/C compressor signal.
1) Check voltage at E18-1 terminal under each condition given in table below.<table><tr><td>While engine running, A/C switch OFF</td><td>0 V</td></tr><tr><td>While engine running, A/C switch ON</td><td>10 – 14V</td></tr></table>NOTE:
When A/C evaporator thermistor temp. is below 2.5°C (36.5°F), A/C remain OFF (E18-1 terminal voltage become 0 – 1 V). This condition is not abnormal.
2) Is check result satisfactory?</td><td>A/C control system circuits are in good condition.</td><td>● “P” wire open or short
● Poor E18-1 terminal connection
If wire and connection are OK, substitute a known-good ECM and recheck.</td></tr>
</table>

Fig. 1 for Step 1

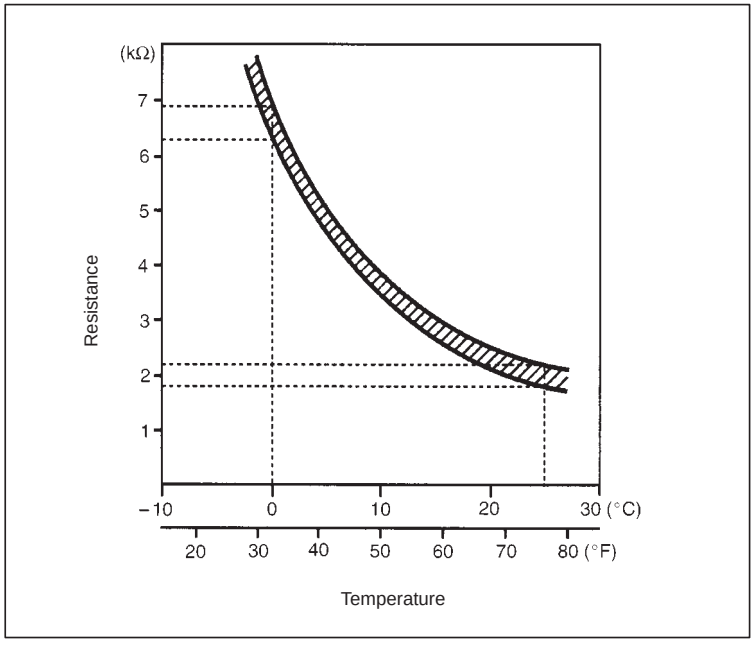

TABLE B-6 ELECTRIC LOAD SIGNAL CIRCUIT CHECK

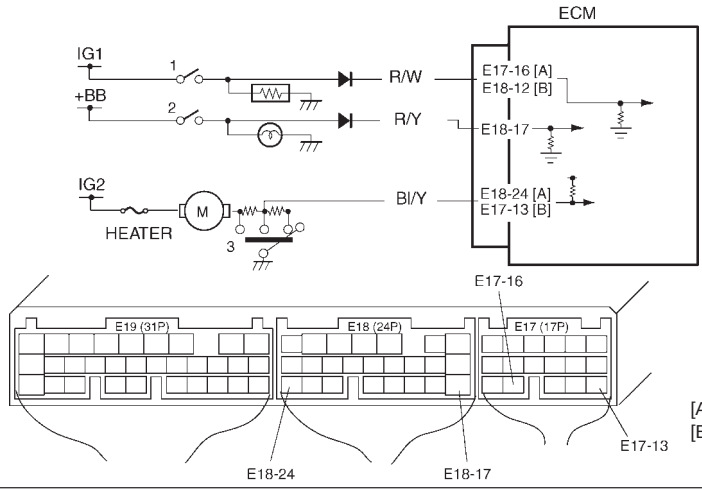

1. Rear defogger switch
2. Light switch
3. Blower fan switch

[A]: Case of TYPE A is shown (See NOTE)
[B]: Case of TYPE B is shown (See NOTE)

NOTE:
For TYPE A and TYPE B, refer to the NOTE in "ECM TERMINAL VOLTAGE VALUES TABLE" for applicable model.

INSPECTION

STEP	ACTION	YES	NO
1	Check Electric Load Signal Circuit. When using SUZUKI scan tool: 1) Connect SUZUKI scan tool to DLC with ignition switch OFF. 2) Start engine and select "DATA LIST" mode on scan tool. 3) Check electric load signal under following each condition. See Fig. 1. Ignition switch ON, Small light, heater blower fan and rear defogger all turned OFF : OFF 0 V (E18-17, E17-16) 10 – 14 V (E18-24 (Case of TYPE A) or E17-13 (Case of TYPE B)) (See NOTE) Ignition switch ON, Small light, heater blower fan or rear defogger turned ON : ON 10 – 14 V (E18-17, E17-16) 0 V (E18-24 (Case of TYPE A) or E17-13 (Case of TYPE B)) (See NOTE) Is check result satisfactory? When not using SUZUKI scan tool: 1) Turn ignition switch ON. 2) Check voltage at each terminals E17-16, E18-17 and E18-24 (Case of TYPE A) or E17-13 (Case of TYPE B) (See NOTE) of ECM connector connected, under above each condition. See Fig. 2. Is each voltage as specified?	Electric load signal circuit is in good condition.	"R/W", "R/Y" and/or "Bl/Y" circuit open or short, Electric load diodes malfunction or Each electric load circuit malfunction.

Fig. 1 for Step 1

When using SUZUKI scan tool:

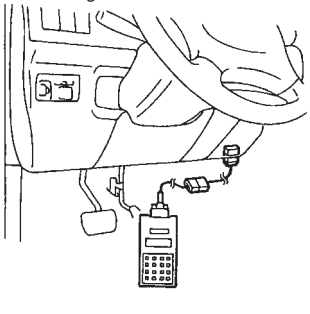

Fig. 2 for Step 1

When not using SUZUKI scan tool:

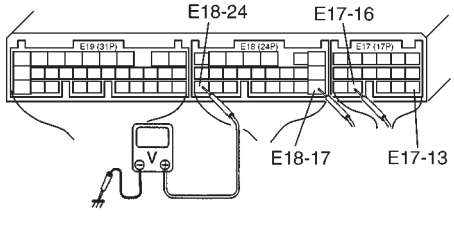

TABLE B-7 A/C CONDENSER FAN CONTROL SYSTEM CHECK

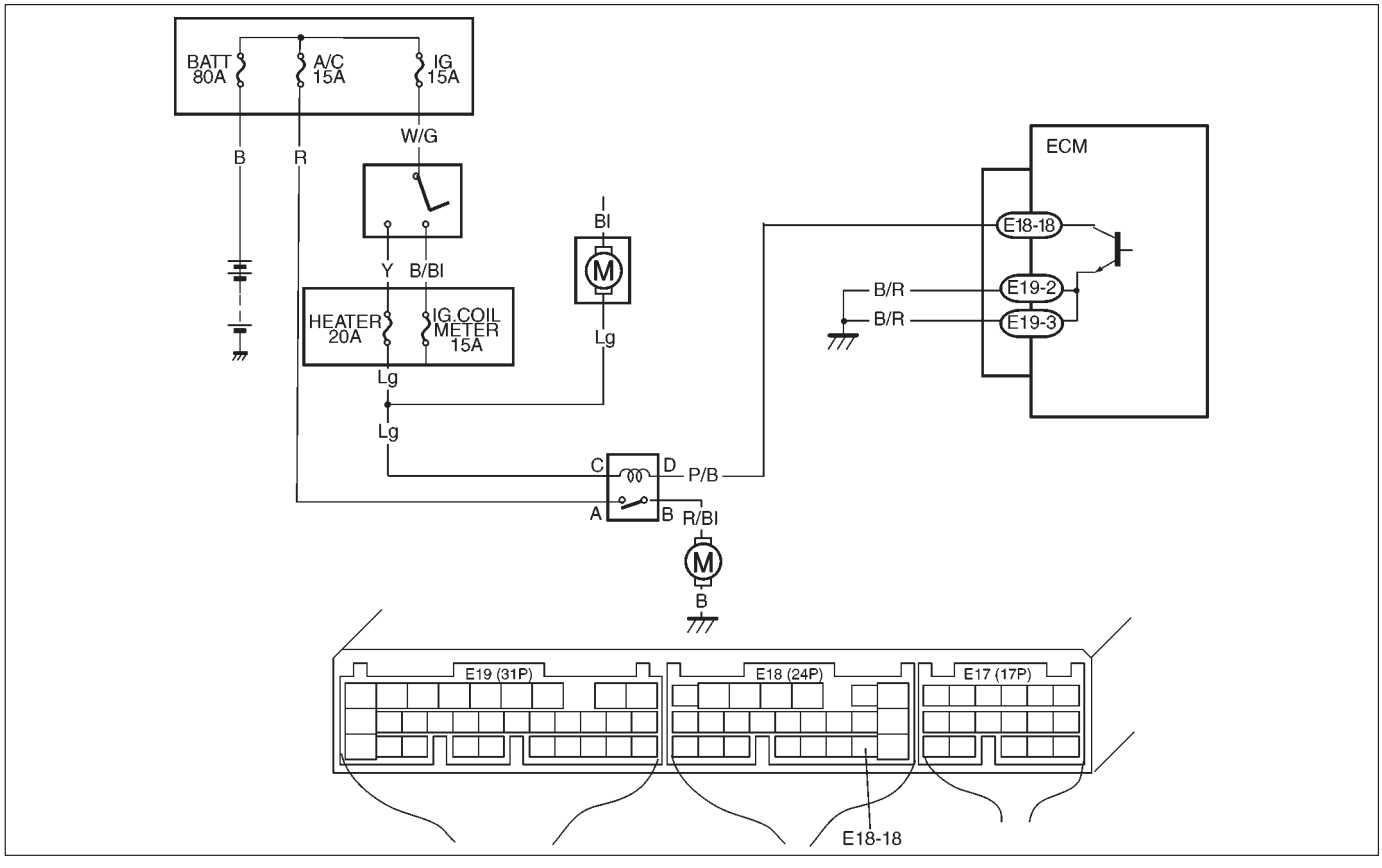

INSPECTION

STEP	ACTION	YES	NO
1	Check Fan Control System. 1) Connect scan tool to DLC with ignition switch OFF. 2) Start engine and select “DATA LIST” mode on scan tool. 3) Warm up engine until coolant temp. is 110°C, 230°F or higher and A/C switch turn OFF. (If engine coolant temp. does not rise, check engine cooling system or ECT sensor.) See Fig. 1. Is A/C condenser fan started when engine coolant temp. reached above temp.?	A/C condenser fan control system is in good condition.	Go to Step 2.
2	Check A/C Condenser Fan Relay and Its Circuit. 1) Check DTC and pending DTC with scan tool. Is DTC P0481 displayed?	Go to DTC P0481 Diag. Flow Table.	Go to Step 3.
3	Check A/C Condenser Fan Relay. 1) Turn ignition switch OFF and remove A/C condenser fan relay. 2) Check for proper connection to relay at terminals “A” and “B”. 3) If OK, check that there is continuity between “A” and “B” when battery is connected to terminals “C” and “D”. See Fig. 2. Is check result satisfactory?	Go to Step 4.	Replace A/C condenser fan relay.
4	Check A/C Condenser Fan. 1) Turn ignition switch OFF. 2) Disconnect fan motor connector. 3) Check for proper connection to motor at “R/Bl” and “B” terminals. 4) If OK, connect battery to motor and check for operation. See Fig. 3. Is it in good condition?	“R”, “R/Bl” or “B” circuit open.	Replace A/C condenser fan motor.

Fig. 1 for Step 2

When using SUZUKI scan tool:

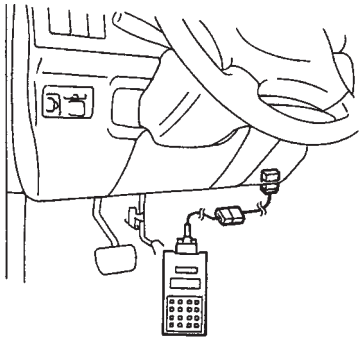

Fig. 2 for Step 3

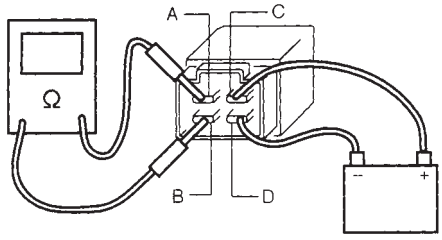

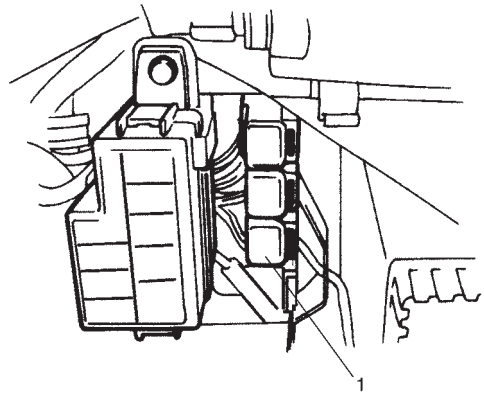

1. A/C condensor fan relay

Fig. 3 for Step 4

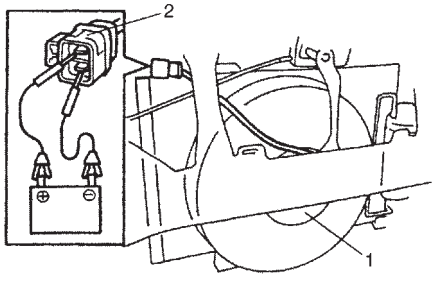

1. A/C condenser fan
2. A/C condenser fan connector

SPECIAL TOOLS

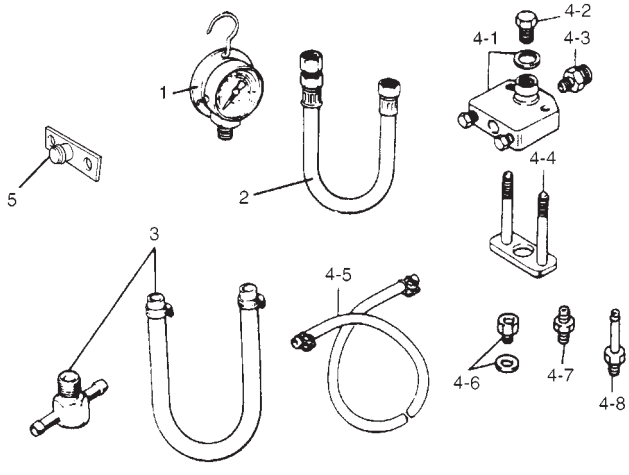

1. Pressure gauge
   09912-58441
2. Pressure hose
   09912-58431
3. 3-way joint & hose
   09912-58490
4. Checking tool set
   09912-58421

4-1. Tool body & washer
4-2. Body plug
4-3. Body attachment-1
4-4. Holder
4-5. Return hose & clamp
4-6. Body attachment-2 & washer
4-7. Hose attachment-1
4-8. Hose attachment-2

5. Checking tool plate
   09912-57610

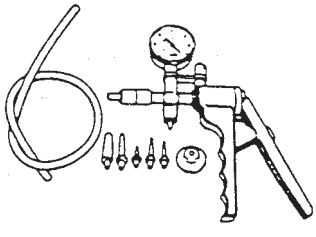

09917-47010
Vacuum pump gauge

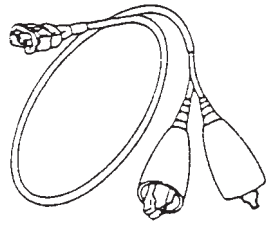

09930-88530
Injector test lead

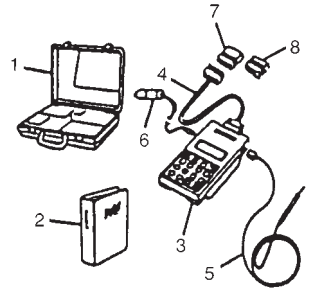

1. Storage case
2. Operator's manual
3. Tech 1 A
4. DLC cable (14/26 pin, 09931-76040)
5. Test lead/probe
6. Power source cable
7. DLC cable adaptor
8. Self-test adaptor

09931-76011
SUZUKI scan tool (Tech 1 A) kit

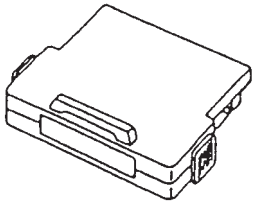

Mass storage cartridge

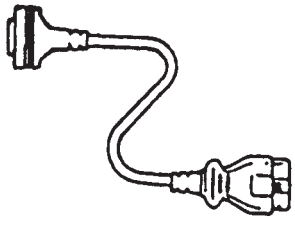

09931-76030
16/14 pin DLC cable

SECTION 6A1

ENGINE MECHANICAL (M13 ENGINE)

WARNING:
For vehicles equipped with Supplemental Restraint (Air Bag) System:

- **Service on and around the air bag system components or wiring must be performed only by an authorized SUZUKI dealer. Refer to "Air Bag System Components and Wiring Location View" under "General Description" in air bag system section in order to confirm whether you are performing service on or near the air bag system components or wiring. Please observe all WARNINGS and "Service Precautions" under "On-Vehicle Service" in air bag system section before performing service on or around the air bag system components or wiring. Failure to follow WARNINGS could result in unintentional activation of the system or could render the system inoperative. Either of these two conditions may result in severe injury.**
- **Technical service work must be started at least 90 seconds after the ignition switch is turned to the "LOCK" position and the negative cable is disconnected from the battery. Otherwise, the system may be activated by reserve energy in the Sensing and Diagnostic Module (SDM).**

CONTENTS

GENERAL DESCRIPTION 6A1- 3

DIAGNOSIS 6A1- 5
- Diagnosis Table 6A1- 5
- Compression Check 6A1- 5
- Engine Vacuum Check 6A1- 7
- Oil Pressure Check 6A1- 8
- Valve Lash (Clearance) 6A1-10

ON-VEHICLE SERVICE 6A1-13
- Air Cleaner Element 6A1-13
- Air Cleaner Assembly 6A1-14
- Knock Sensor 6A1-14
- Cylinder Head Cover 6A1-15
- Throttle Body and Intake Manifold 6A1-18
- Exhaust Manifold 6A1-21
- Oil Pan and Oil Pump Strainer 6A1-24
- Timing Chain Cover 6A1-27
- Oil Pump 6A1-32
- Timing Chain and Chain Tensioner 6A1-36
- Camshaft, Tappet and Shim 6A1-41
- Valves and Cylinder Head 6A1-47
- Pistons, Piston Rings, Connecting Rods and Cylinders 6A1-61
- Engine Mountings 6A1-70

UNIT REPAIR OVERHAUL 6A1-71
- Engine Assembly 6A1-71

Main Bearings, Crankshaft and Cylinder Block 6A1-77
SPECIAL TOOLS 6A1-90
REQUIRED SERVICE MATERIALS 6A1-91

GENERAL DESCRIPTION

ENGINE

The engine is water-cooled, in line 4 cylinders, 4 stroke cycle gasoline unit with its DOHC (Double overhead camshaft) valve mechanism arranged for “V” type valve configuration and 16 valves (4 valves/one cylinder).

The double overhead camshaft is mounted over the cylinder head; it is driven from crankshaft through timing chain, and no push rods are provided in the valve train system.

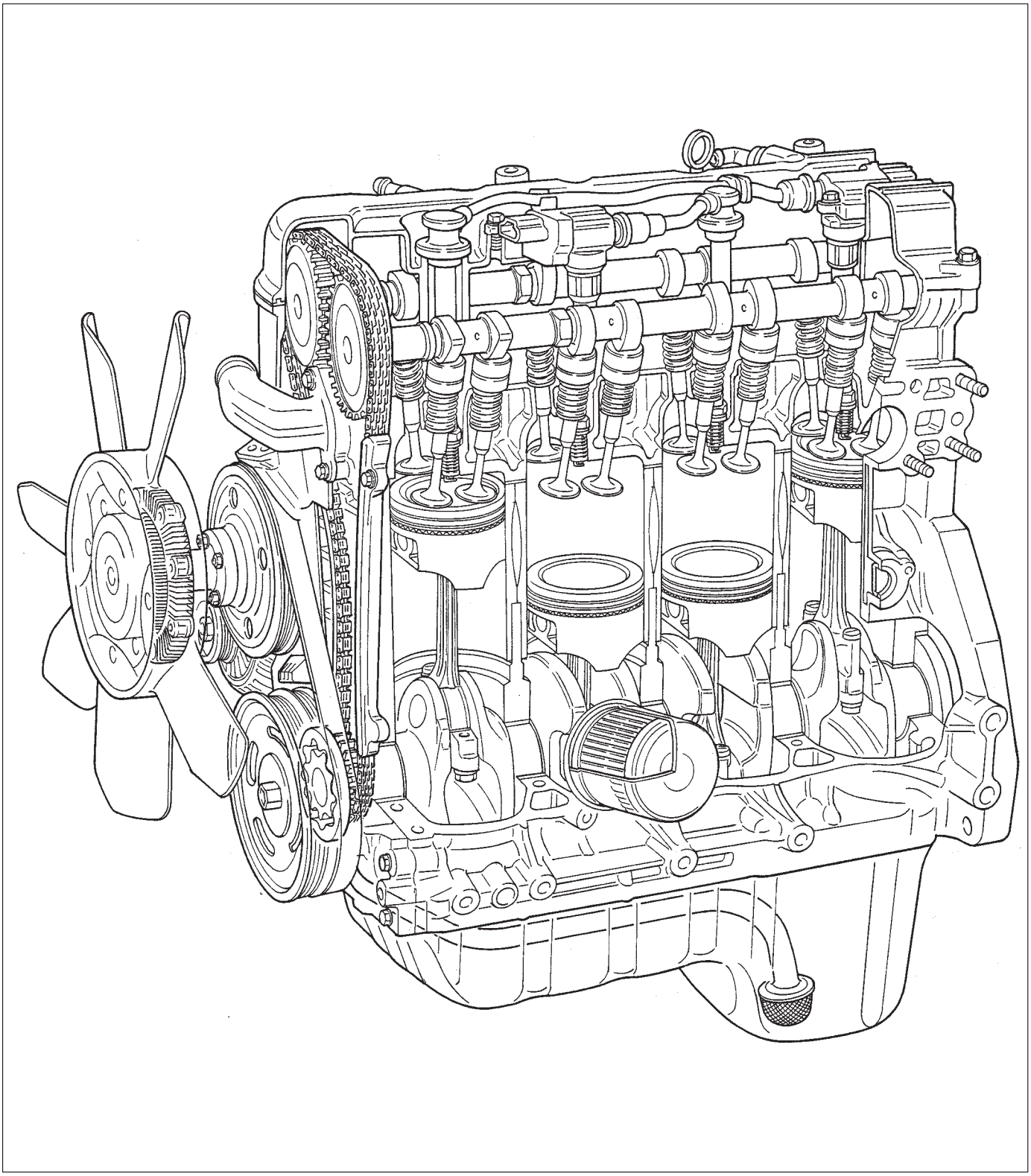

ENGINE LUBRICATION

The oil pump is of a trochoid type, and mounted under the crankshaft. Oil is drawn up through the oil pump strainer and passed through the pump to the oil filter. The filtered oil flows into 2 paths in cylinder block.
In one path, oil reaches the crankshaft journal bearings. Oil from the crankshaft journal bearings is supplied to the connecting rod bearings by means of intersecting passages drilled in the crankshaft, and then injected from the big end of connecting rod to lubricate piston, rings, and cylinder wall.

In other path oil goes up to the cylinder head and lubricates valves and camshafts, etc., after passing through the internal oilway of camshafts.

An oil relief valve is provided on the oil pump. This valve starts relieving oil pressure when the pressure exceeds about 400 kPa (4.0 kg/cm^2, 56.9 psi).

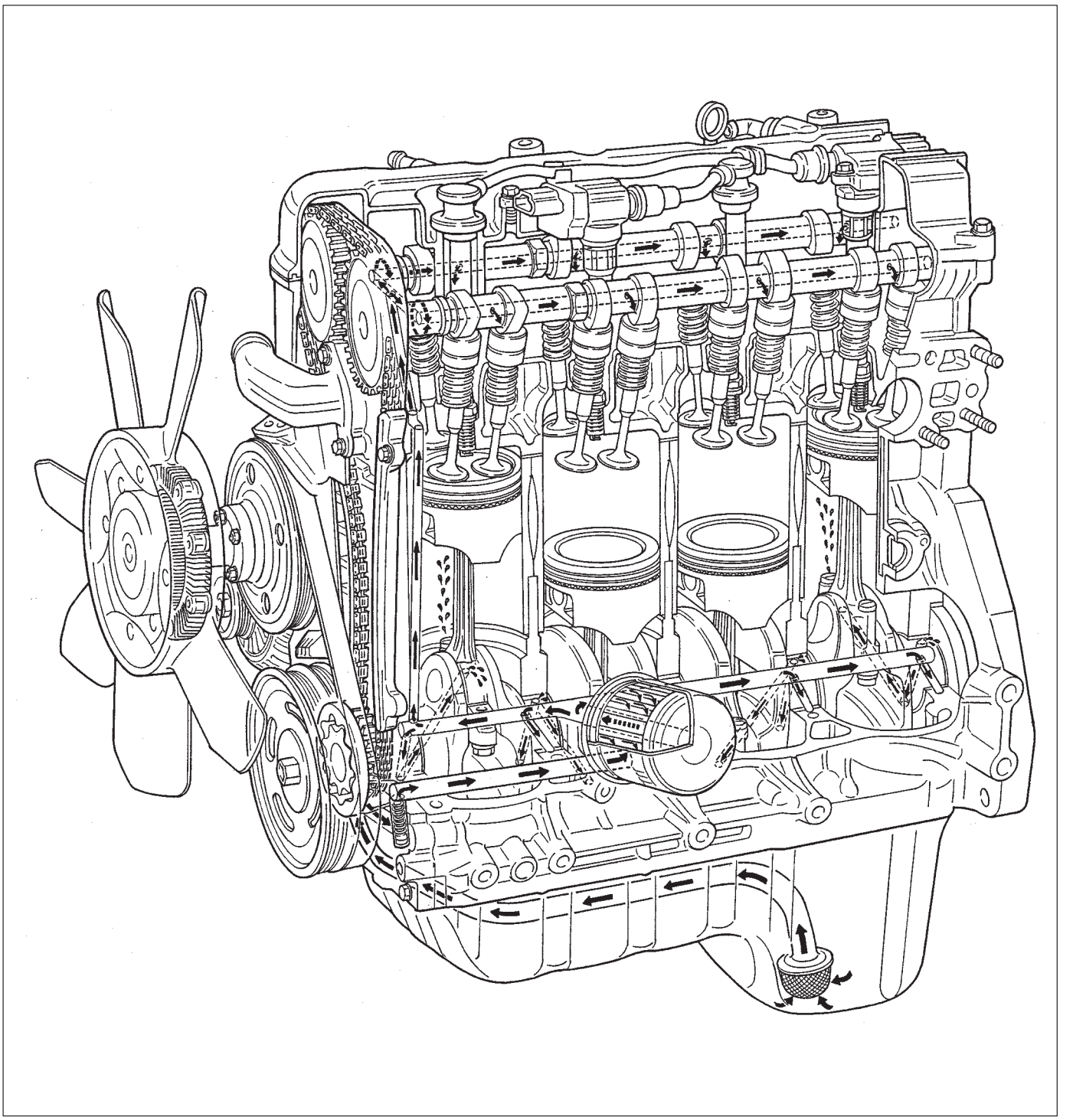

DIAGNOSIS

DIAGNOSIS TABLE

Refer to ENGINE MECHANICAL DIAGNOSIS TABLE in Section 6.

COMPRESSION CHECK

Check compression pressure on all 4 cylinders as follows:

1) Warm up engine.
2) Stop engine after warming up.

NOTE:
After warming up engine, place transmission gear shift lever in "Neutral" (shift selector lever to "P" range for A/T model), and set parking brake and block drive wheels.

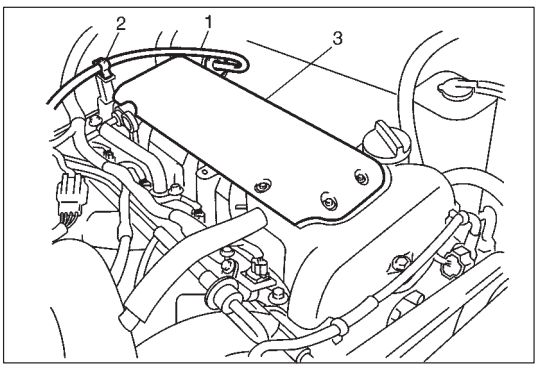

3) Disconnect accelerator cable (1) from clamp (2) (For left hand steering vehicle only).
4) Remove cylinder head upper cover (3).

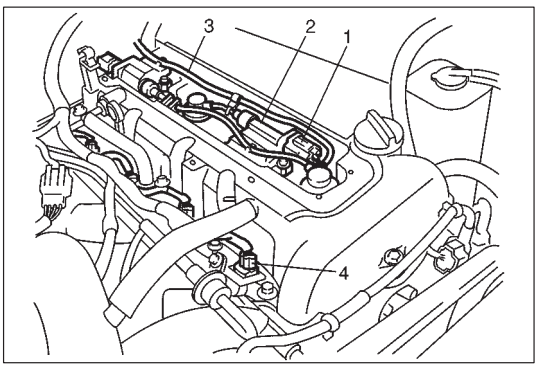

5) Disconnect ignition coil couplers (1).
6) Remove ignition coil assemblies (2) with high-tension cord (3).
7) Remove all spark plugs.
8) Disconnect fuel injector wires (4) at the coupler.

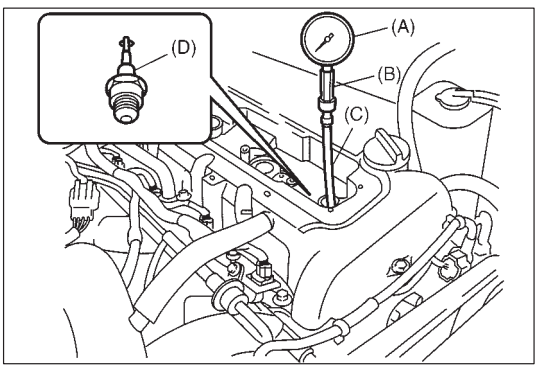

9) Install special tools (Compression gauge) into spark plug hole.

Special Tool
(A): 09915-64510-001
(B): 09915-64510-002
(C): 09915-64530
(D): 09915-67010

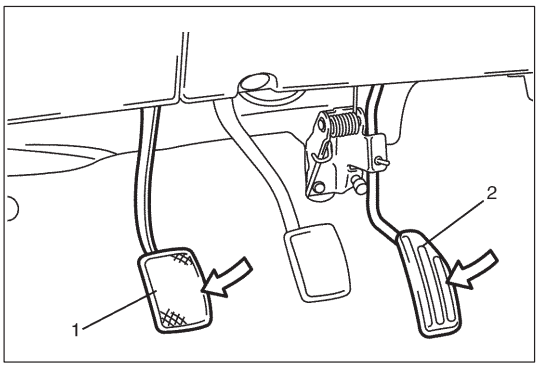

10) Disengage clutch (1) (to lighten starting load on engine) for M/T vehicle, and depress accelerator pedal (2) all the way to make throttle fully open.

11) Crank engine with fully charged battery, and read the highest pressure on compression gauge.

NOTE:

- **For measuring compression pressure, crank engine at least 250 rpm by using fully charged battery.**
- **If check results are below the limit valve, check installation condition for special tool.**

	Compression pressure
Standard	1400 kPa (14.0 kg/cm^2, 199.0 psi)
Limit	1100 kPa (11.0 kg/cm^2, 156.0 psi)
Max. difference between any two cylinders	100 kPa (1.0 kg/cm^2, 14.2 psi)

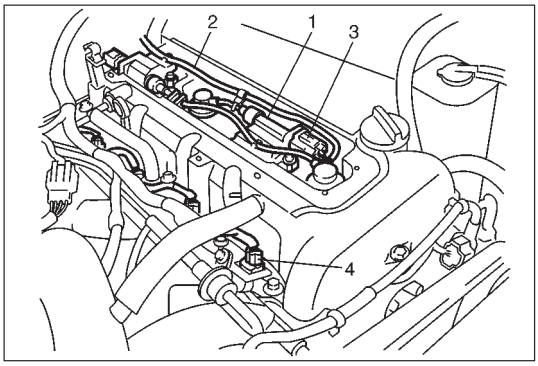

12) Carry out Steps 9) through 11) on each cylinder to obtain 4 readings.
13) After checking, install spark plugs and ignition coil assemblies (1) with high-tension cord (2).
14) Connect ignition coil couplers (3).
15) Connect fuel injector wires(4) at the coupler.

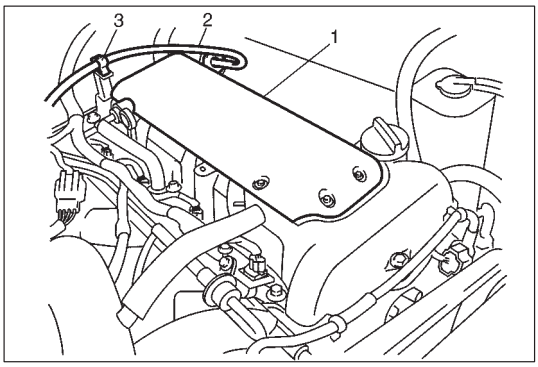

16) Check cylinder head upper cover gasket for deterioration and then install it into groove of cylinder head upper cover (1) securely.
17) Install cylinder head upper cover with gasket on to cylinder head cover.
18) Connect accelerator cable (2) to clamp (3) (For left hand steering vehicle only).

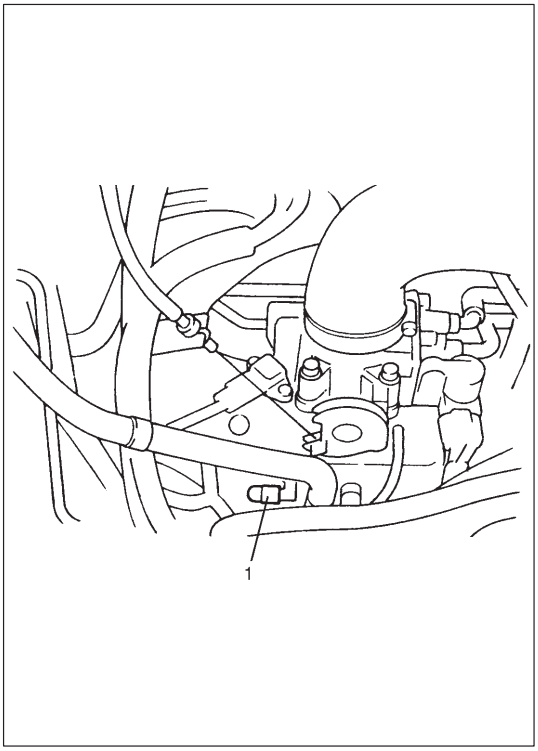

ENGINE VACUUM CHECK

The engine vacuum that develops in the intake line is a good indicator of the condition of the engine. The vacuum checking procedure is as follows:

1) Warm up engine to normal operating temperature.

   NOTE:
   After warming up engine, be sure to place transmission gear shift lever in "Neutral" (shift selector lever to "P" range for A/T model), and set parking brake and block drive wheels.

2) Stop engine and turn off the all electric switches.
3) Remove cap (1) from intake manifold.

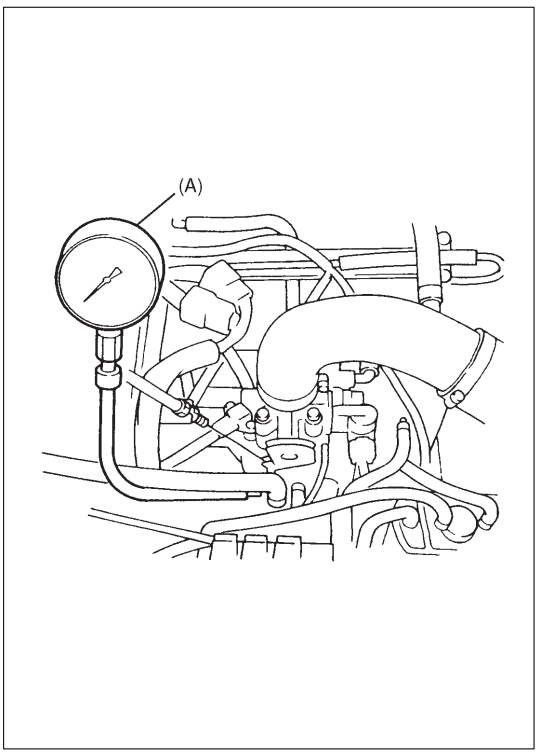

4) Connect special tool (Vacuum gauge) to intake manifold.

   Special Tool
   (A): 09915-67310

5) Run engine at specified idle speed and read vacuum gauge. Vacuum should be within specification.

   Vacuum specification: 59 – 73 kPa
   (at sea level) (45 – 55 cm Hg, 17.7 – 21.6 in. Hg)
   at specified idle speed

6) After checking, disconnect special tool (Vacuum gauge) from intake manifold.
7) Install cap to intake manifold.

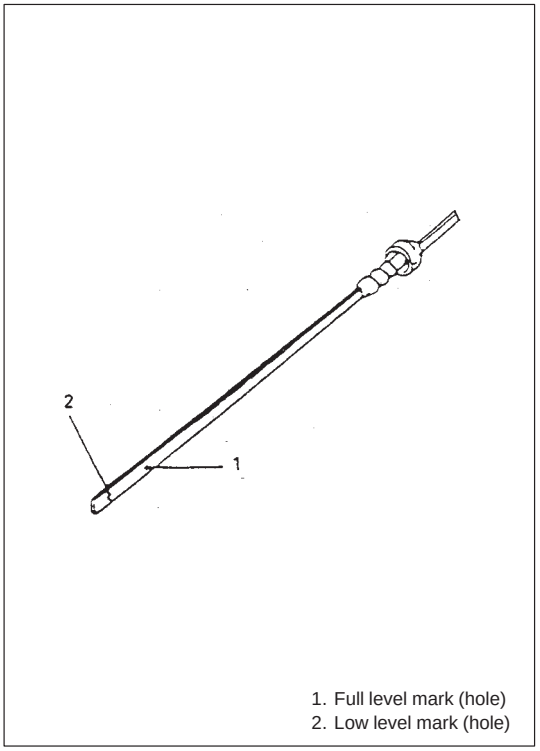

1. Full level mark (hole)
2. Low level mark (hole)

OIL PRESSURE CHECK

NOTE:
Prior to checking oil pressure, check the following items.

- **Oil level in oil pan.**
  If oil level is low, add oil up to Full level mark (hole) on oil level gauge.
- **Oil quality.**
  If oil is discolored, or deteriorated, change it.
  For particular oil to be used referring to the table in Section 0B.
- **Oil leaks.**
  If leak is found, repair it.

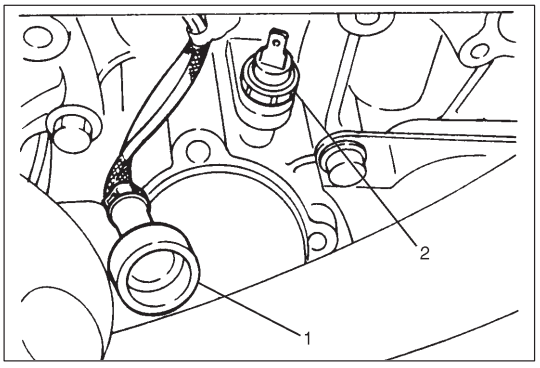

1) Disconnect oil pressure switch coupler (1) and remove oil pressure switch (2) from cylinder block.

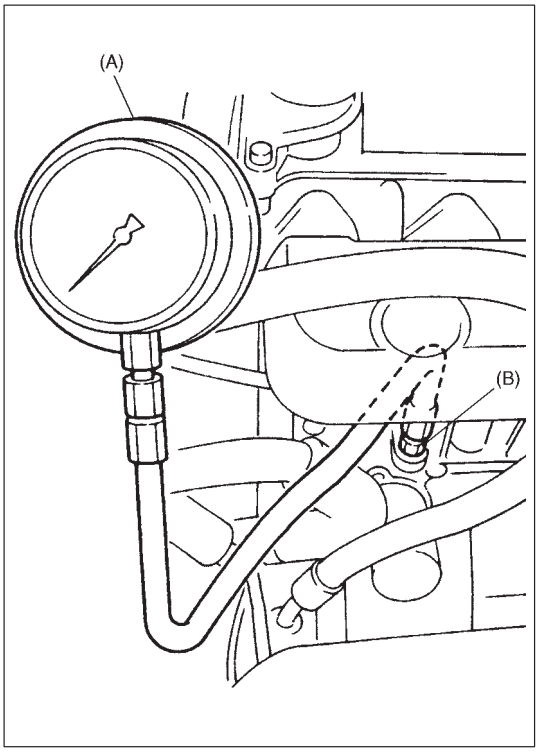

2) Install special tools (Oil pressure gauge) to vacated threaded hole.

   Special Tool
   (A): 09915-77310
   (B): 09915-78211

3) Start engine and warm it up to normal operating temperature.

   NOTE:
   Be sure to place transmission gear shift lever in "Neutral" (shift selector lever to "P" range for A/T model), and set parking brake and block drive wheels.

4) After warming up, raise engine speed to 4,000 rpm and measure oil pressure.

   Oil pressure specification:
   280 – 430 kPa (2.8 – 4.3 kg/cm^2, 39.8 – 61.1 psi) at 4,000 rpm

5) Stop engine and remove oil pressure gauge and attachment.

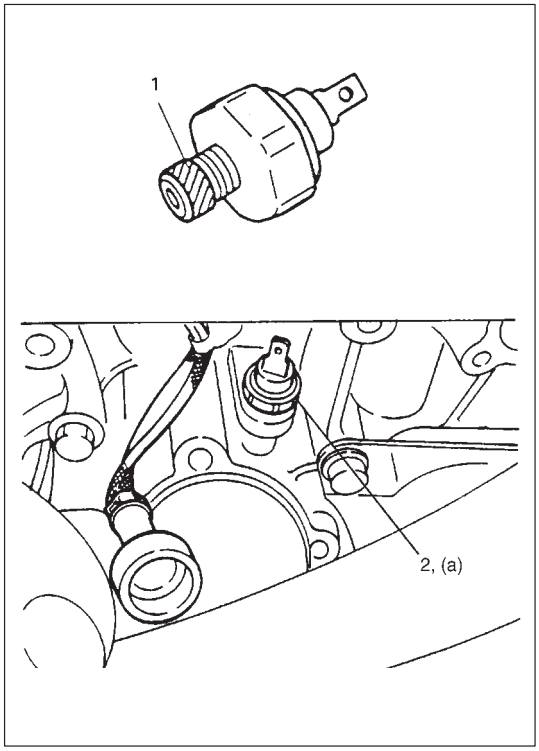

6) Before reinstalling oil pressure switch (2), be sure to wrap its screw threads with sealing tape (1) and tighten switch to specified torque.

NOTE:
If sealing tape edge is bulged out from screw threads of switch, cut it off.

Tightening Torque
(a): 14 N·m (1.4 kg-m, 10.5 lb-ft)

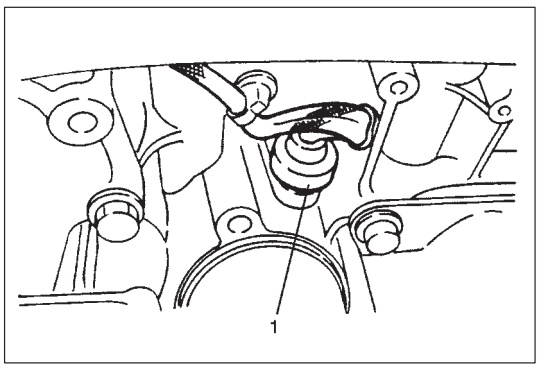

7) Start engine and check oil pressure switch for oil leakage. If oil leakage is found, repair it.
8) Connect oil pressure switch coupler (1).

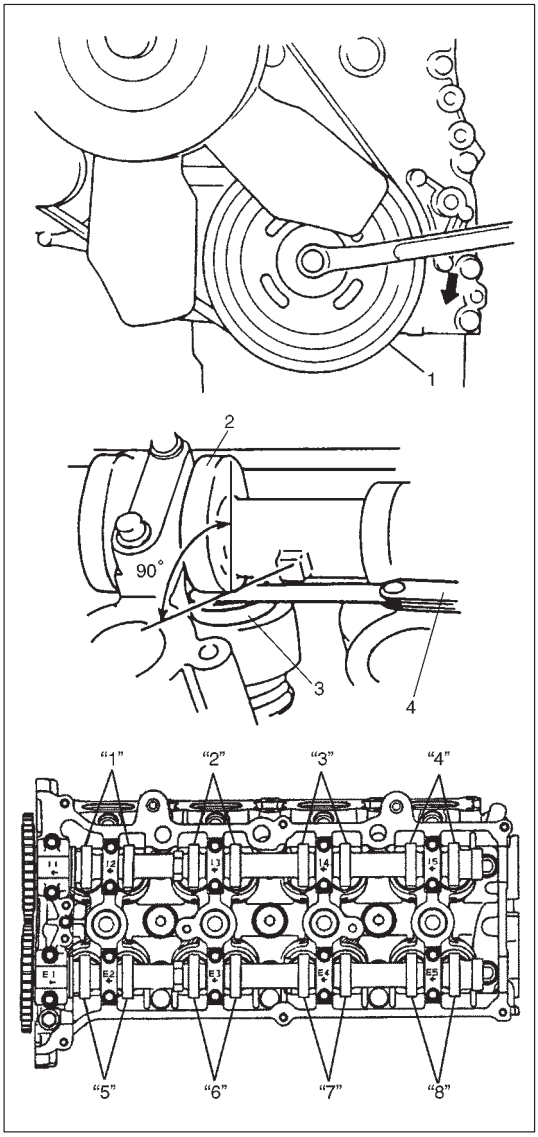

VALVE LASH (CLEARANCE)

1) Remove negative cable at battery.
2) Remove cylinder head cover referring to "CYLINDER HEAD COVER" in this section.
3) Using 17 mm wrench, turn crankshaft pulley (1) clockwise until cam lobes (2) become perpendicular to shim faces (3) at valves "1" and "7" as shown in figure.
4) Check valve lashes with thickness gauge (4) according to the following procedure.
   a) Check valve lashes at valves "1" and "7".
   b) Turn camshafts by 90° (by turning crankshaft with wrench).
   c) Make sure that cam lobes are perpendicular to shim faces at valves to be checked (in this case, "3" and "8"), if not, adjust it by turning crankshaft. Check valve lashes.
   d) In the same manner as b) – c), check valve lashes at valves "4" and "6".
   e) In the same manner as b) – c) again, check valve lashes at valves "2" and "5".

		When cold (Coolant temperature is 15 – 25°C or 59 – 77°F)	When hot (Coolant temperature is 60 – 68°C or 140 – 154°F)
Valve clearance specification	Intake	0.18 – 0.22 mm (0.007 – 0.009 in.)	0.21 – 0.27 mm (0.008 – 0.011 in.)
	Exhaust	0.28 – 0.32 mm (0.011 – 0.013 in.)	0.30 – 0.36 mm (0.012 – 0.014 in.)

If valve lash is out of specification, record valve lash and adjust it to specification by replacing shim.

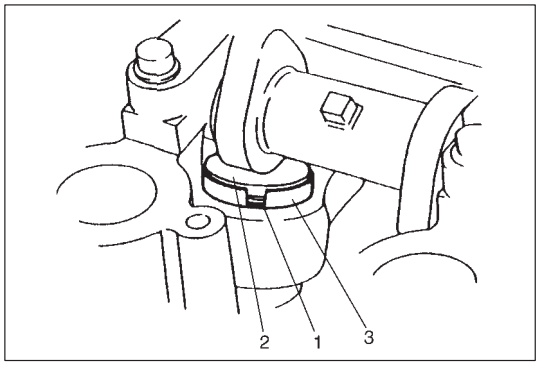

Replacement of shim

1) Close the valve whose shim (2) is to be replaced by turning crankshaft, then turn tappet (3) till its cut section (1) faces inside as shown in figure.

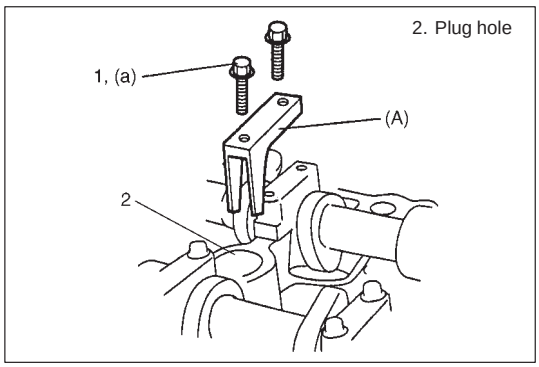

2) Lift valve by turning crankshaft and then remove camshaft housing bolts (1) where the shim to be replaced.
3) Install special tool with camshaft housing bolts as shown in figure.

Special Tool
(A): 09916-67020

Tightening Torque
(a): 8 N·m (0.8 kg-m, 6.0 lb-ft)

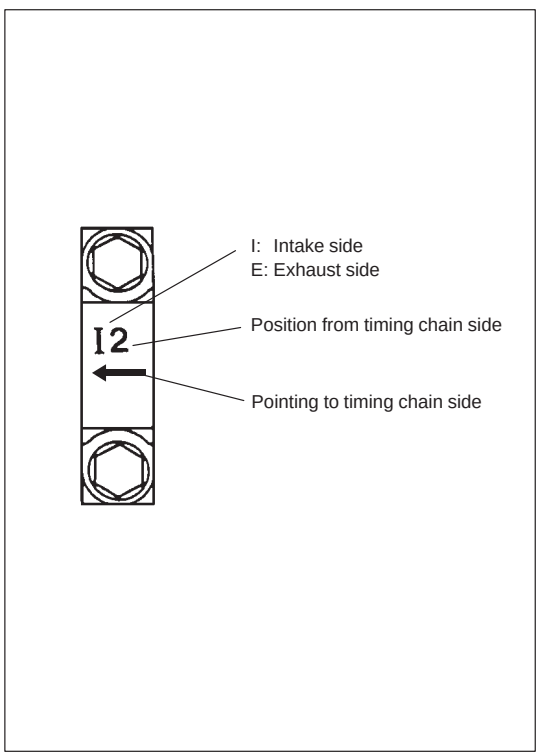

NOTE:

- **Check the special tools carved seal as shown, and then install special tool in accordance with the location of each cam shaft housing.**
- **If special tool is holding down the shim, adjust special tool position so as not to hold down the shim by loosening cam shaft housing bolt.**

No. on camshaft housing	Embossed mark on special tool
I2	IN2
I3,I4,I5	IN345
E2	EX2
E3,E4,E5	EX345

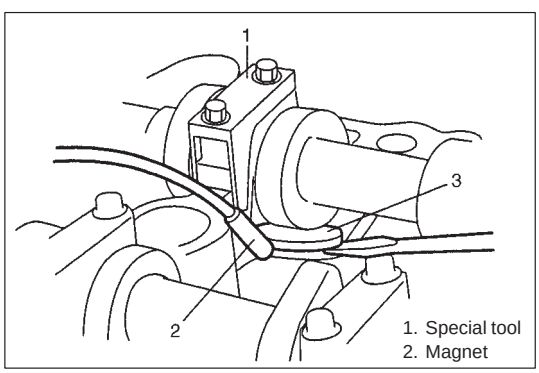

4) Turn camshaft by approximately 90° clockwise and remove shim (3).

WARNING:
Never put in the hand between cam shaft and tappet.

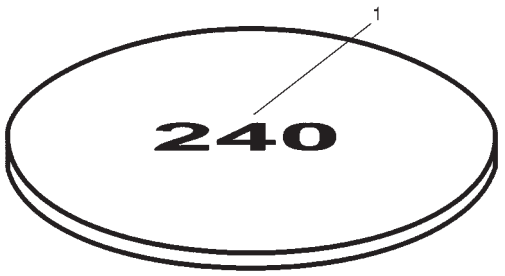

1. Removed shim

5) Check removed shim for No. (1) and determine replacement shim by calculating shim No. with the following formula and table.
   Intake:
   A = B + (C x 100 – 20)
   Exhaust:
   A = B + (C x 100 – 30)
   A: New shim No. to be installed
   B: Removed shim No.
   C: Measured valve clearance (mm)
   For example of intake side:
   Shim with No.240 is installed, and measured clearance is 0.45 mm.
   A = 240 + (0.45 x 100 – 20)
   Replace No.240 shim with No.265 shim.
6) Install new shim facing shim No. side with tappet.

Last digit of approximate value A	New shim No. to be replaced	
0, 3, 5 or 8	A	
1 or 6	A – 1	
2 or 7	A + 1	
4 or 9	Last digit of removed shim	
	0 or 5	3 or 8
	A + 1	A – 1

Shim No.

218	228	238	248	258	268	278	288	298
220	230	240	250	260	270	280	290	300
223	233	243	253	263	273	283	293	
225	235	245	255	265	275	285	295	

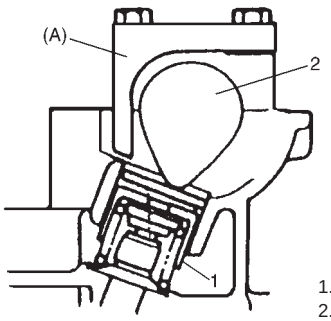

1. Tappet
2. Camshaft

7) Lift valve by turning crankshaft counterclockwise (in opposite direction against above Step 4) and remove special tool.

Special Tool
(A): 09916-67020

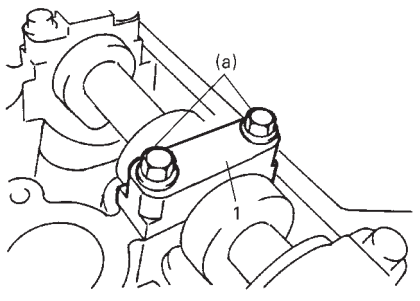

1. Camshaft housing

8) Install camshaft housing (1) and tighten them to specified torque.

Tightening Torque
(a): 11 N·m (1.1 kg-m, 8.0 lb-ft)

Check valve clearance again after adjusting it.
9) After checking and adjusting all valves.
10) Install cylinder head cover, referring to “CYLINDER HEAD COVER” in this section.

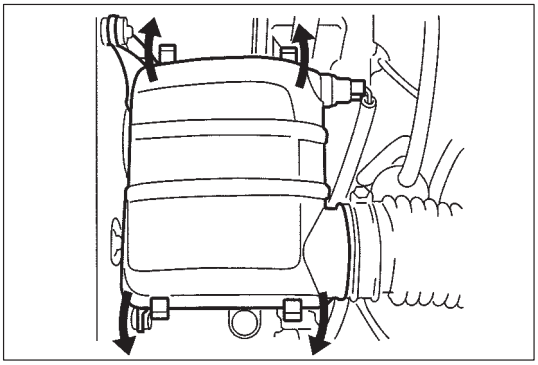

ON-VEHICLE SERVICE

AIR CLEANER ELEMENT

REMOVAL

1) Open air cleaner case by unhooking its clamps.
2) Remove air cleaner element from case.

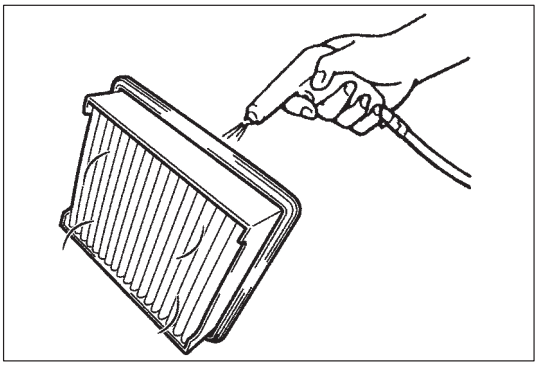

INSPECTION

Check air cleaner element for dirt. Replace excessively dirty element.

CLEAN

Blow off dust by compressed air from air outlet side of element.

INSTALLATION

Reverse removal procedure for installation.

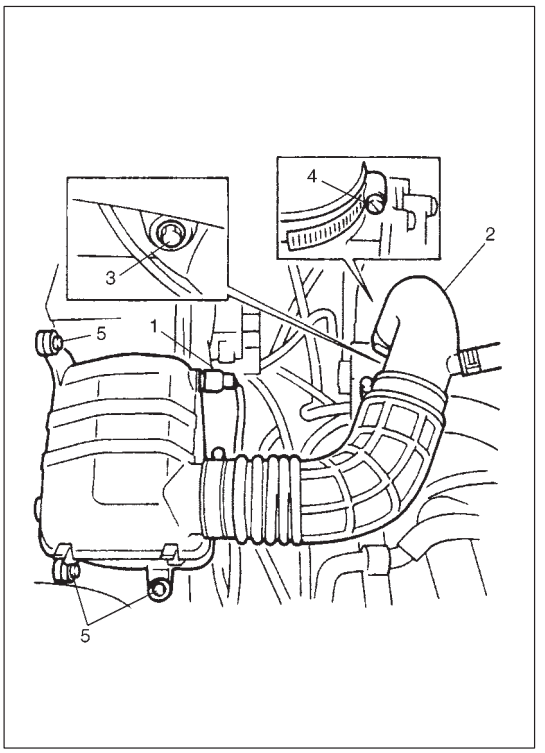

AIR CLEANER ASSEMBLY

REMOVAL

1) Disconnect negative cable at battery.
2) Disconnect IAT sensor coupler (1).
3) Disconnect breather hose from air cleaner outlet No.2 hose (2).
4) Remove air cleaner outlet No.2 hose fastening bolt (3).
5) Loosen air cleaner outlet No.2 hose clamp bolt (4).
6) Remove air cleaner case fastening bolts (5).
7) Remove air cleaner assembly with outlet hoses.

INSTALLATION

Reverse removal procedure for installation.

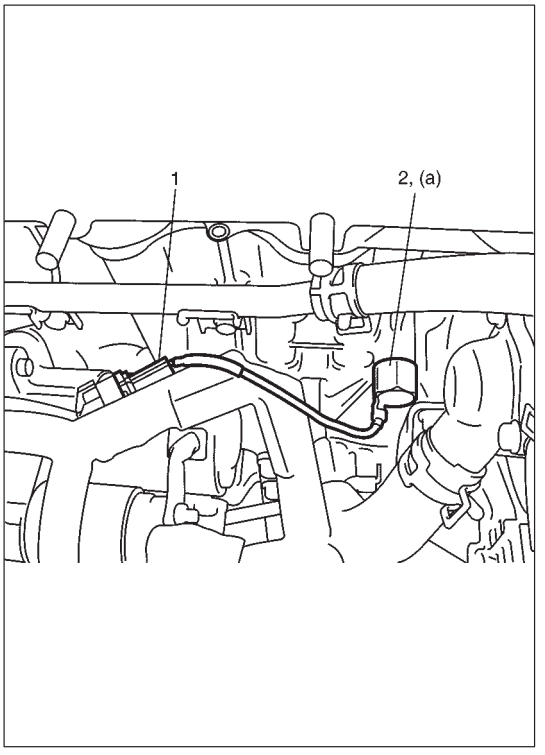

KNOCK SENSOR

REMOVAL

1) Disconnect negative cable at battery.
2) Remove intake manifold referring to “THROTTLE BODY AND INTAKE MANIFOLD” in this section.
3) Disconnect knock sensor connector (1).
4) Remove knock sensor (2) from cylinder block.

INSPECTION

Check sensor for damage.
If any faulty is found, replace.

INSTALLATION

Reverse removal procedure for installation.

Tightening Torque
(a): 23 N·m (2.3 kg-m, 16.5 lb-ft)

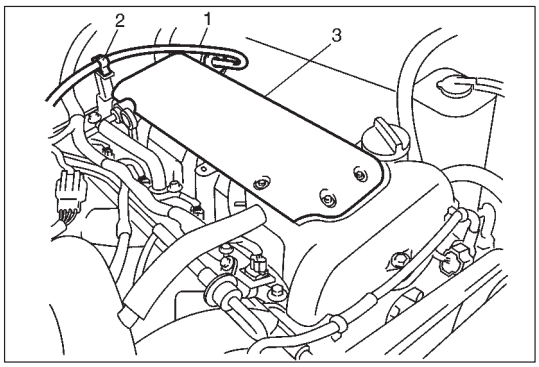

CYLINDER HEAD COVER

REMOVAL

1) Disconnect negative cable at battery.
2) Disconnect accelerator cable (1) from clamp (2) (For left hand steering vehicle only).
3) Remove cylinder head upper cover (3).

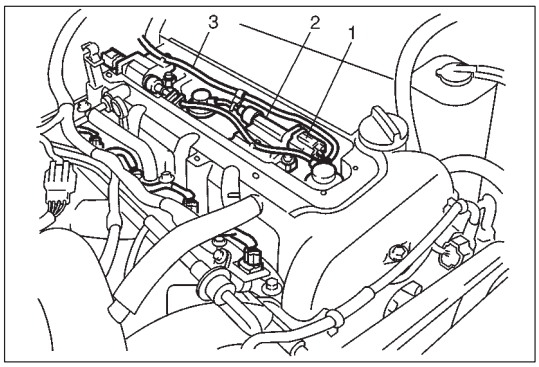

4) Disconnect ignition coil couplers (1).
5) Remove ignition coil assemblies (2) with high-tension cord (3).

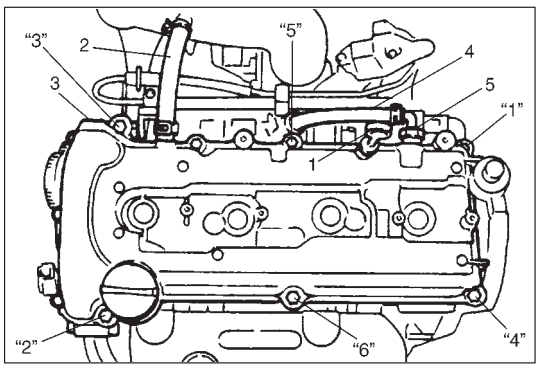

6) Remove oil level gauge (1).
7) Disconnect breather hose (2) from cylinder head cover (3) and PCV hose (4) from PCV valve (5).
8) Remove cylinder head cover mounting bolts in such order as indicated in figure.

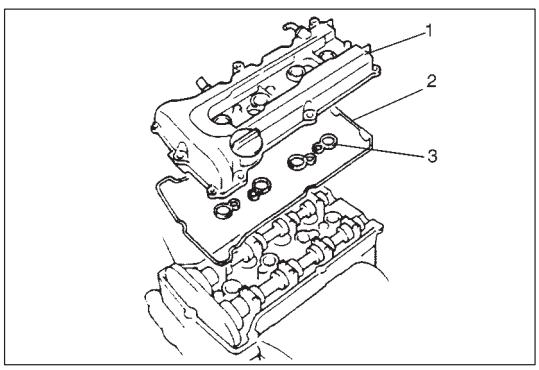

9) Remove cylinder head cover (1) with cylinder head cover gasket (2) and spark plug hole gasket (3).

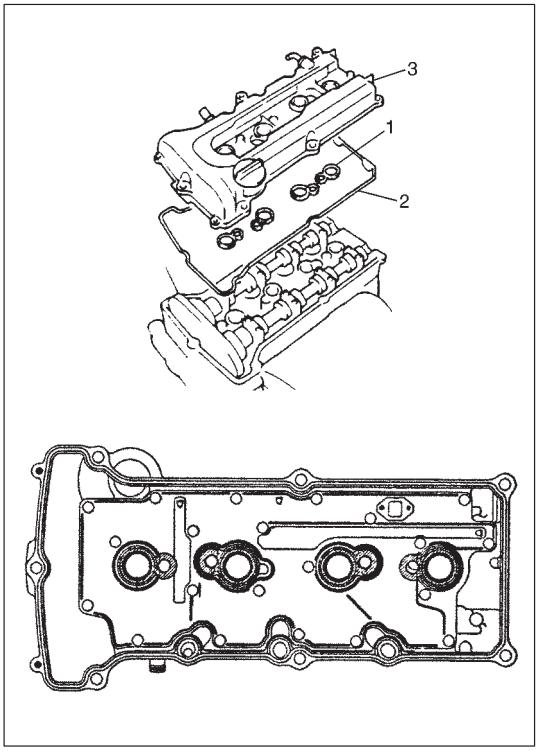

INSTALLATION

1) Install new spark plug hole gaskets (1) and new cylinder head cover gasket (2) to cylinder head cover (3) as shown in figure.

NOTE:
Be sure to check each of these parts for deterioration or any damage before installation and replace if found defective.

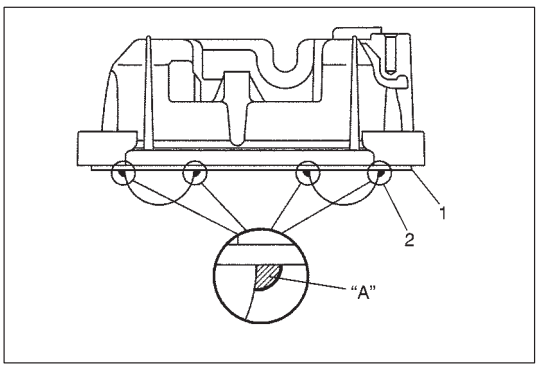

2) Remove oil, old sealant, and dust from sealing surface on cylinder head and cover. After cleaning, apply sealant "A" to the following point.
   - Cylinder head gasket (1) sealing surface area (2) as shown.

"A": Sealant 99000-31150

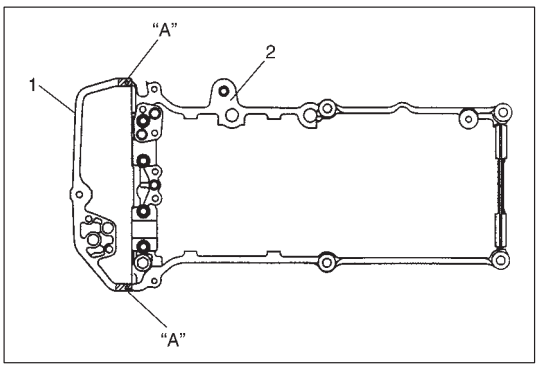

   - Timing chain cover (1) and cylinder head (2) matching surface as shown.

"A": Sealant 99000-31150

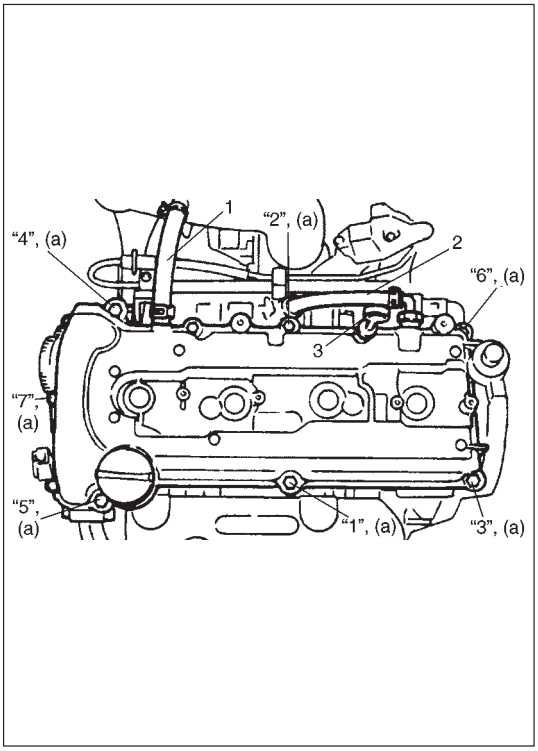

3) Install cylinder head cover to cylinder head.

NOTE:
When installing cylinder head cover, use care so that cylinder head cover gasket or spark plug hole gaskets will not get out of place or fall off.

4) Tighten bolts in such order as indicated in figure a little at a time till they are tightened to specified torque.

Tightening Torque
(a): 8 N·m (0.8 kg-m, 6.0 lb-ft)

5) Connect breather hose (1) and PCV hose (2).
6) Install oil level gauge (3).
7) Install ignition coil assemblies with high-tension cord.
8) Connect ignition coil couplers.
9) Install cylinder head upper cover.
10) Connect accelerator cable to clamp (For left hand steering vehicle only).
11) Connect negative cable at battery.

THROTTLE BODY AND INTAKE MANIFOLD

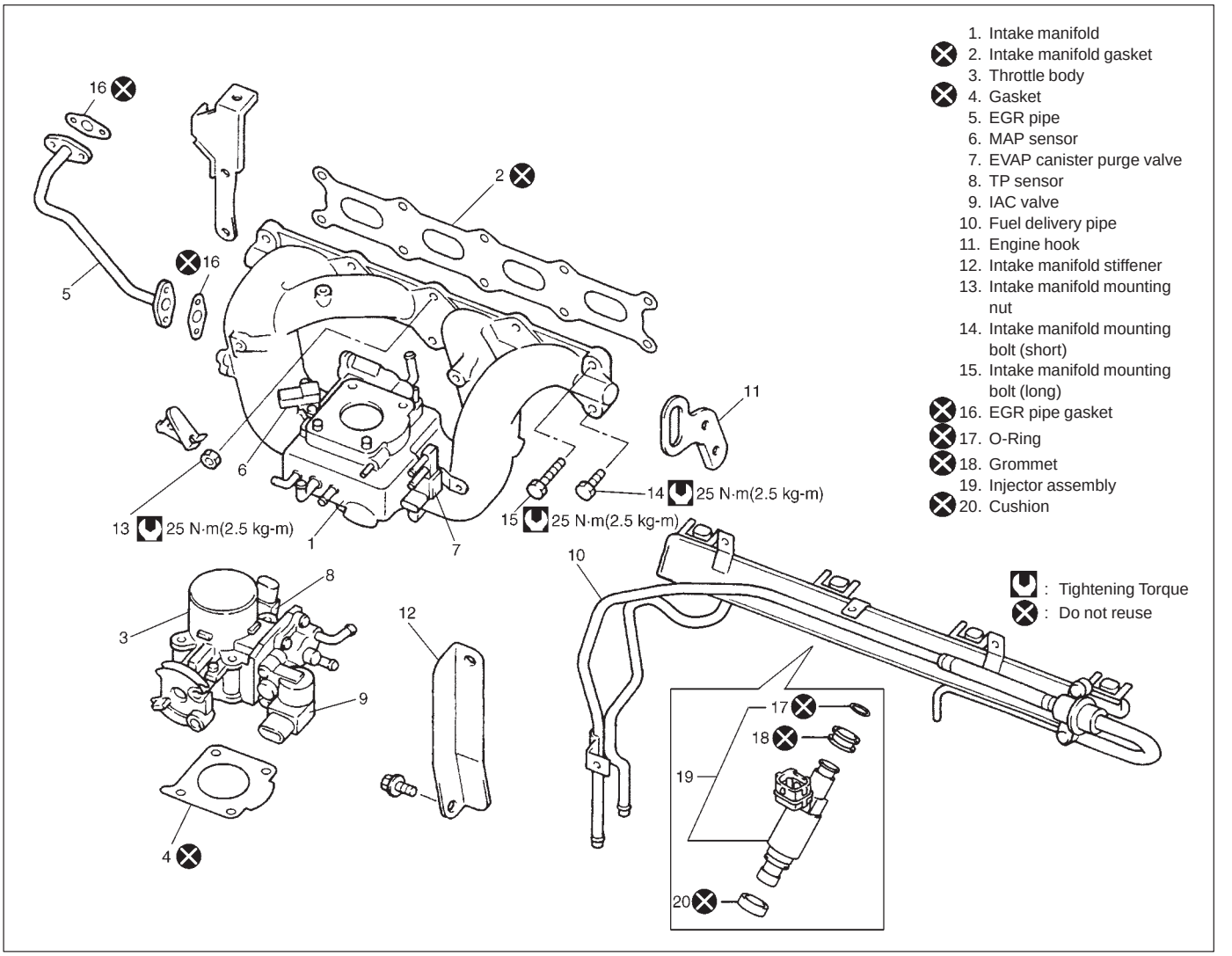

REMOVAL

1) Relieve fuel pressure according to fuel pressure relief procedure described in Section 6.
2) Disconnect negative cable at battery.

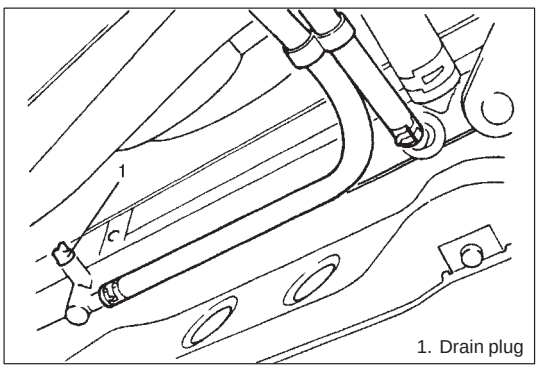

3) Drain coolant by loosening drain plug (1).

WARNING:
To help avoid danger of being burned, do not remove drain plug (1) and radiator cap while engine and radiator are still hot. Scalding fluid and steam can be blown out under pressure if plug and cap are taken off too soon.

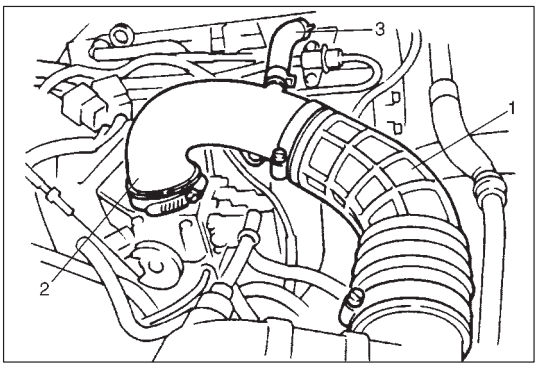

4) Remove air cleaner outlet No.1 (1) and No.2 (2) hoses and breather hose (3).

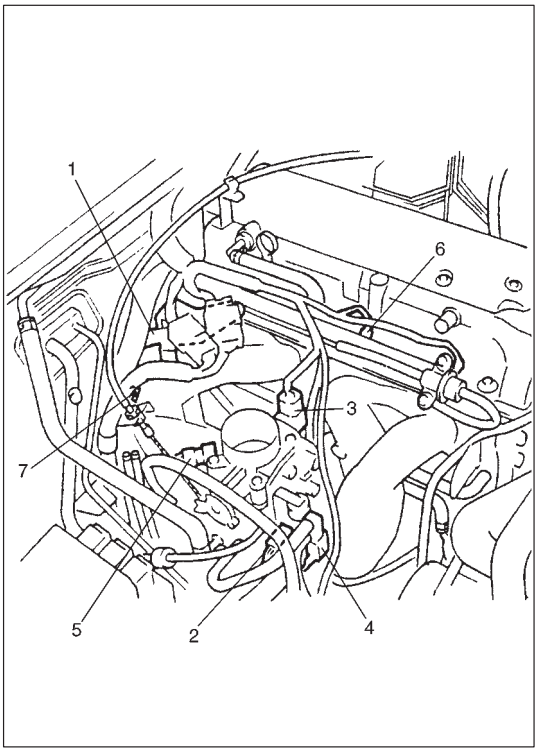

5) Remove intake manifold bracket (1) with main harness from intake manifold.
6) Disconnect the following electric lead wires:
   - IAC valve (2)
   - TP sensor (3)
   - EVAP canister purge valve (4)
   - MAP sensor (5)
   - Fuel injector wire harness at couplers (6)
   - Ground terminal (7) from intake manifold

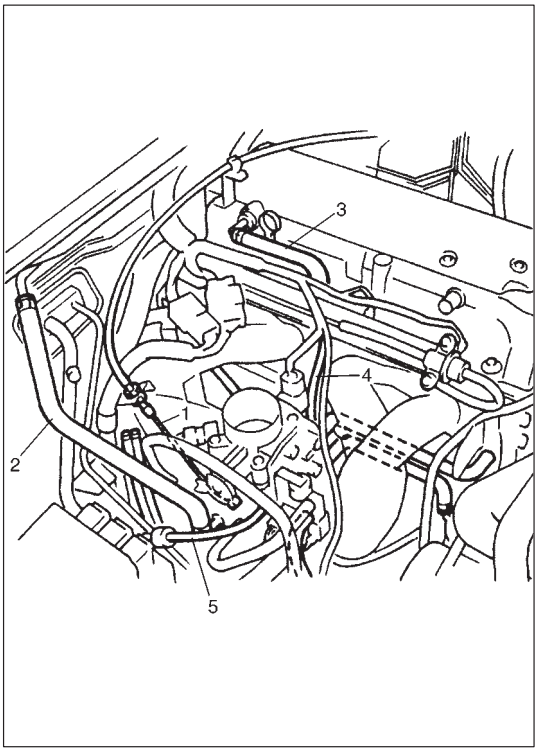

7) Disconnect accelerator cable (1) from throttle body.
8) Disconnect the following hoses:
   - Brake booster hose (2) from intake manifold
   - PCV hose (3) from PCV valve
   - Fuel pressure regulator vacuum hose (4) from intake manifold
   - Canister purge hose from EVAP canister purge valve
   - Water hoses from throttle body
   - Vacuum hose (5) (to check valve) from throttle body
   - Fuel feed hose and return hose from each pipe
9) Remove fuel delivery pipe with fuel injectors from cylinder head and intake manifold.
10) Remove canister purge hose bracket.
11) Disconnect EGR pipe from EGR valve.

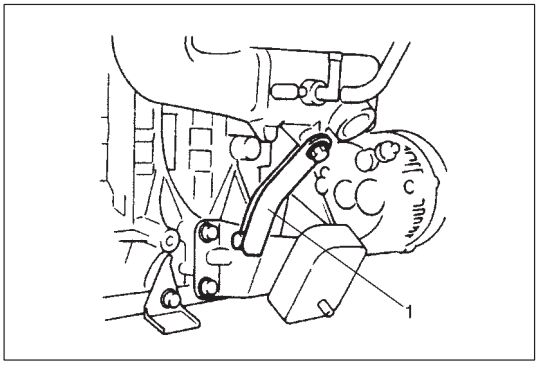

12) Remove intake manifold stiffener (1).

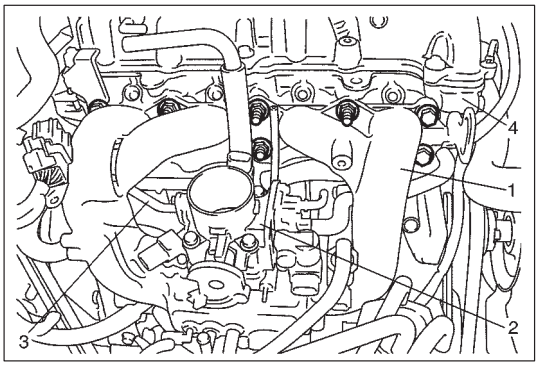

13) Remove intake manifold (1) with throttle body (2) and EGR pipe (3) from cylinder head (4), and then its gasket.

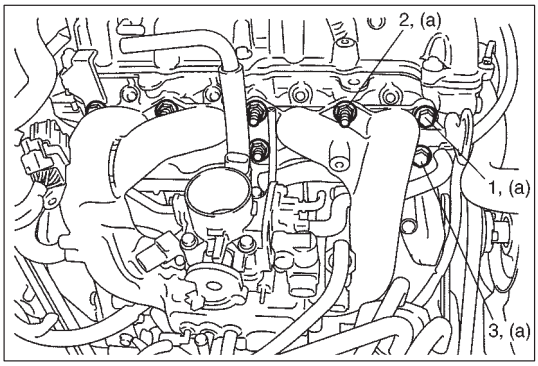

INSTALLATION

Reverse removal procedure for installation noting the followings.

- Use new intake manifold gasket and EGR pipe gasket.
- Tighten long bolt (1), short bolt (3) and nuts (2) to specified torque.

Tightening Torque
(a): 25 N·m (2.5 kg-m, 18.0 lb-ft)

- Check to ensure that all removed parts are back in place. Reinstall any necessary parts which have not been reinstalled.
- Adjust accelerator cable play referring in Section 6E.
- Refill cooling system referring in Section 6B.
- Upon completion of installation, turn ignition switch ON but engine OFF and check for fuel leaks.
- Finally, start engine and check for engine coolant leaks.

EXHAUST MANIFOLD

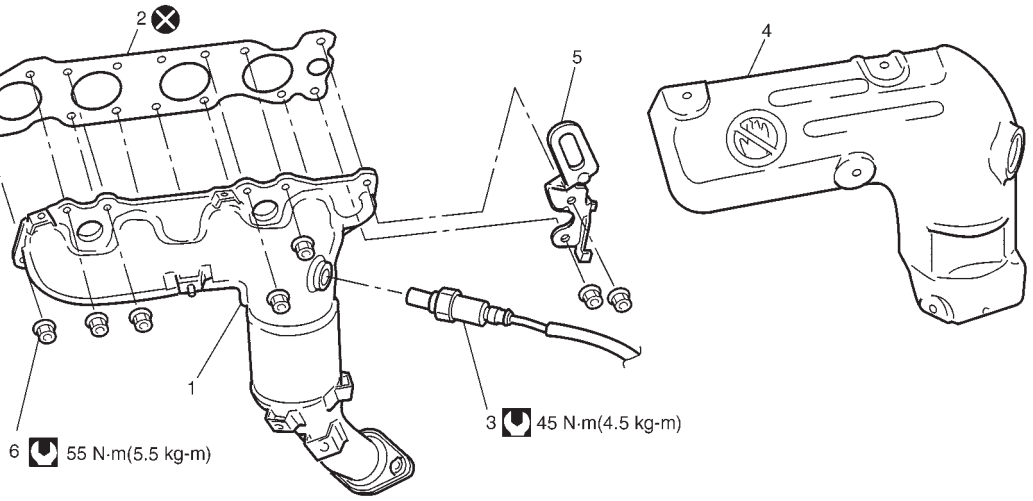

1. Exhaust manifold
2. Exhaust manifold gasket
3. Heated oxygen sensor (if equipped)
4. Exhaust manifold cover
5. Engine hook
6. Exhaust manifold mounting nut

: Tightening Torque
: Do not reuse

WARNING:
To avoid danger of being burned, do not service exhaust system while it is still hot. Service should be performed after system cools down.

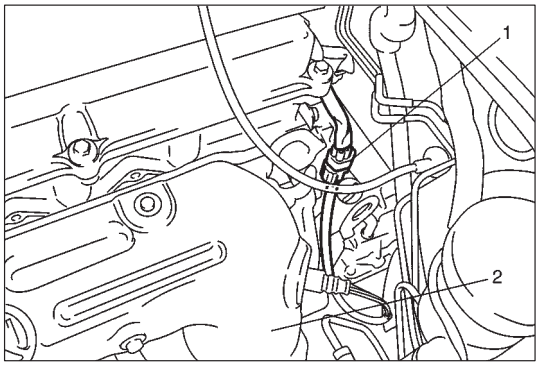

REMOVAL

1) Disconnect negative cable at battery.
2) Disconnect heated oxygen sensor coupler (1) (if equipped) and detach it from its stay.
3) Remove exhaust manifold cover (2).

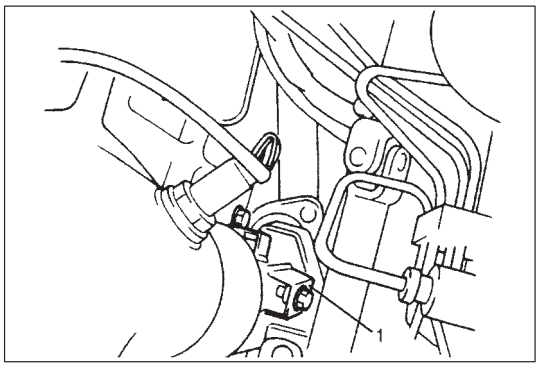

4) Remove exhaust manifold stiffener (1).

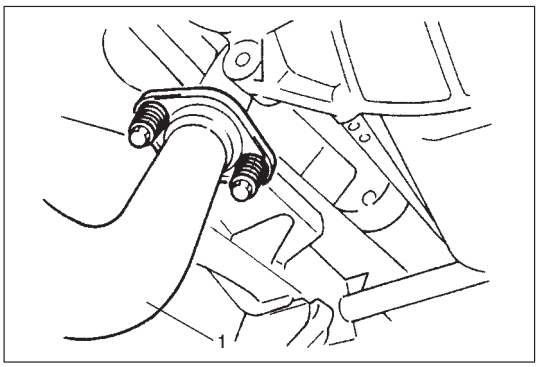

5) Disconnect exhaust pipe (1) from exhaust manifold.

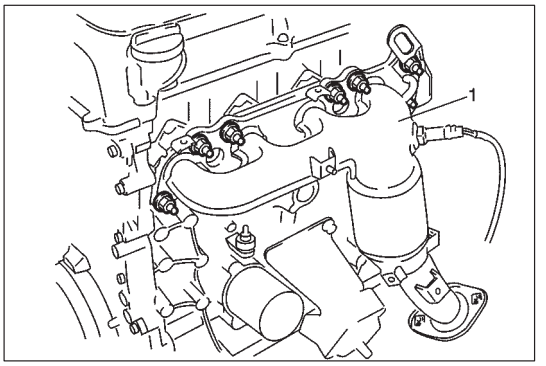

6) Remove exhaust manifold (1) and its gasket from cylinder head.

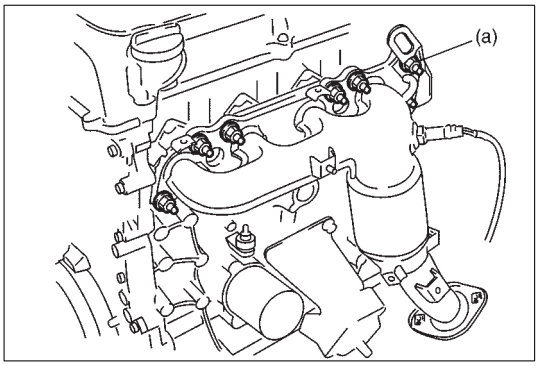

INSTALLATION

1) Install new gasket to cylinder head.
   Then install exhaust manifold.
   Tighten manifold nuts to specified torque.

   Tightening Torque
   (a): 55 N·m (5.5 kg-m, 40.0 lb-ft)

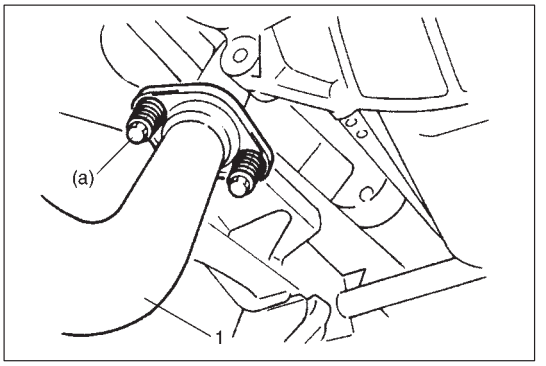

2) Install seal ring and install exhaust pipe (1) to exhaust manifold.
   Before installing seal ring, check it for deterioration or damage, and replace as necessary.
   Tighten pipe fasteners to specified torque.

   Tightening Torque
   (a): 50 N·m (5.0 kg-m, 36.5 lb-ft)

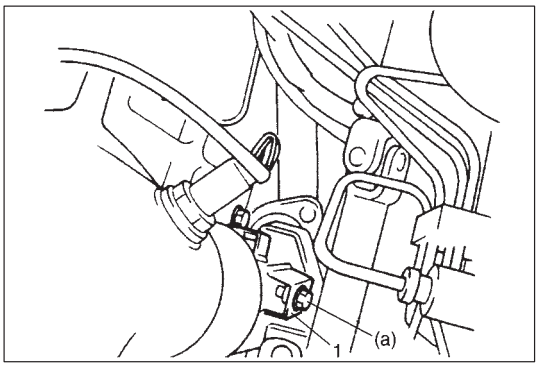

3) Install exhaust manifold stiffener (1).
   Tighten exhaust manifold stiffener bolts to specified torque.

   Tightening Torque
   (a): 50 N·m (5.0 kg-m, 36.5 lb-ft)

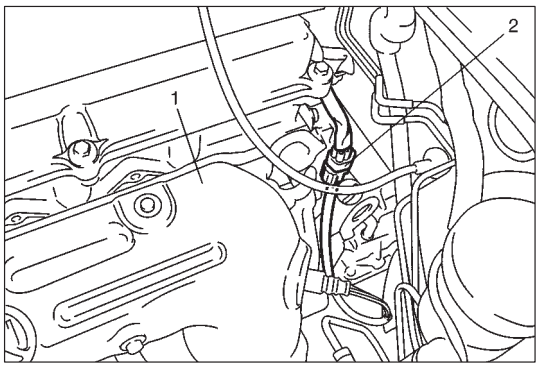

4) Install exhaust manifold cover (1) .
5) Connect heated oxygen sensor coupler (2) and fit coupler to bracket securely (if equipped).

6) Connect negative cable at battery.
7) Check exhaust system for exhaust gas leakage.

OIL PAN AND OIL PUMP STRAINER

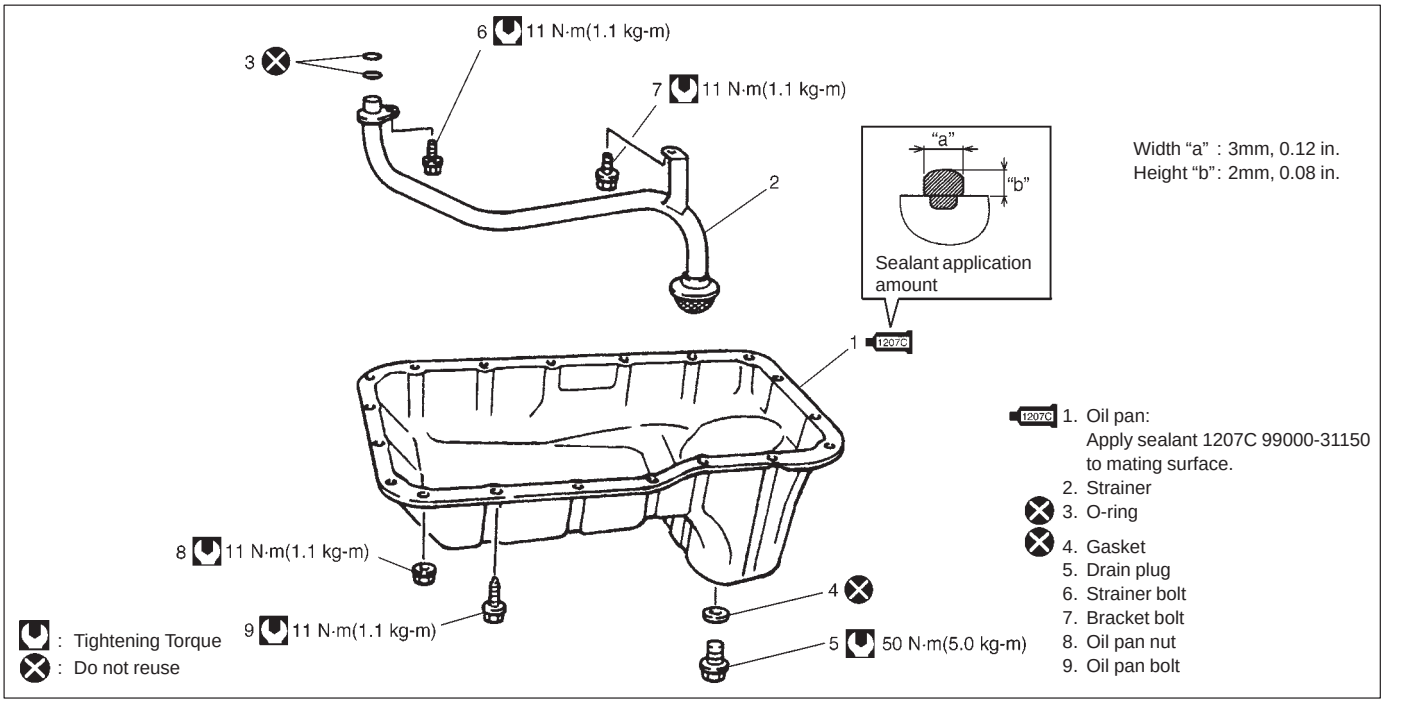

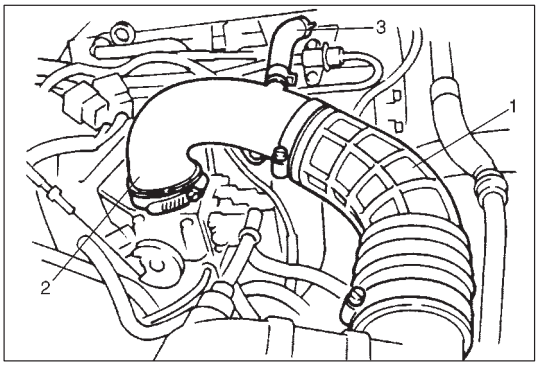

REMOVAL

1) Remove oil level gauge.
2) Remove air cleaner outlet No.1 (1) and No.2 (2) hoses and breather hose (3).

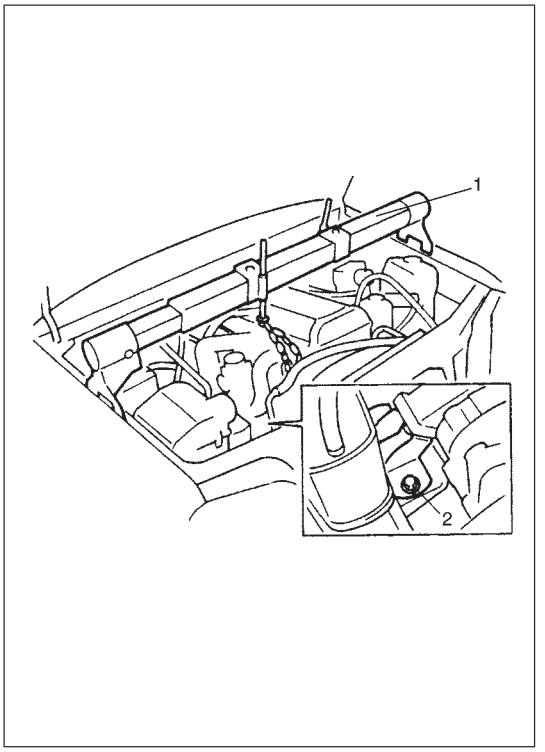

3) To facilitate and ensure removal of oil pan, increase clearance between engine and vehicle body according to the following procedure.
   a) Install support device (1).
   b) Loosen engine mounting bracket bolts (2), but do not remove them.
   c) Hoist engine 10 – 15 mm (0.4 – 0.6 in.).

CAUTION:
Do not hoist engine more than instructed above. That may cause trouble to engine or transmission.

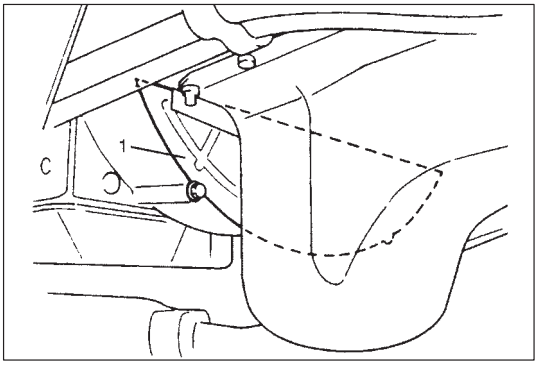

4) Drain engine oil by removing drain plug.
5) Remove clutch housing (torque converter housing for A/T vehicle) lower plate (1).

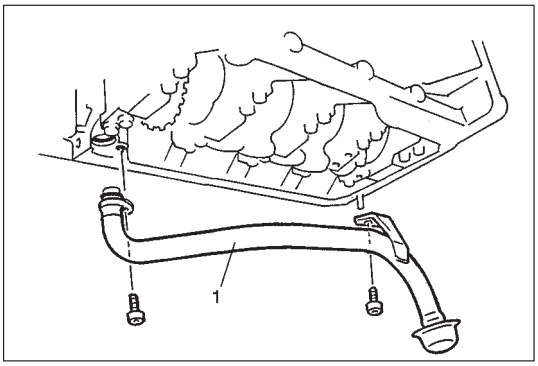

6) Remove oil pan and then oil pump strainer (1) from cylinder block.

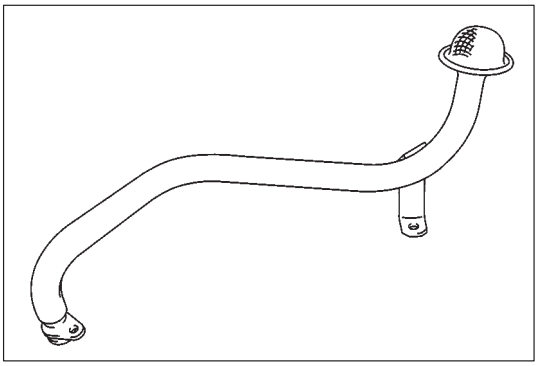

CLEAN

- Inside of oil pan and oil pump strainer screen.

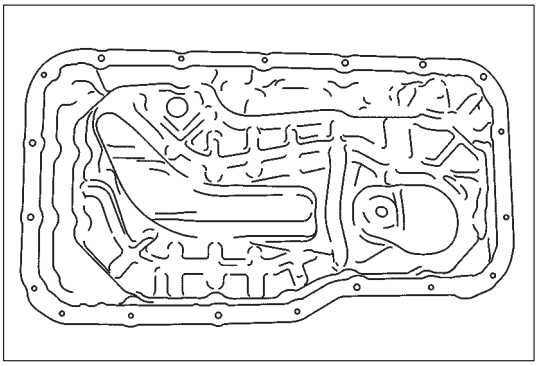

- Clean sealing surface on oil pan and cylinder block.
  Remove oil, old sealant and dust from sealing surface.

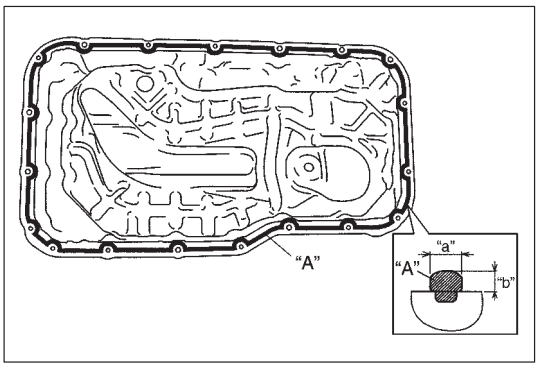

INSTALLATION

1) Apply sealant continuously to oil pan mating surface as shown in figure.

   "A" sealant: 99000-31150

   Width "a" : 3 mm, 0.12 in.
   Height "b" : 2 mm, 0.08 in.

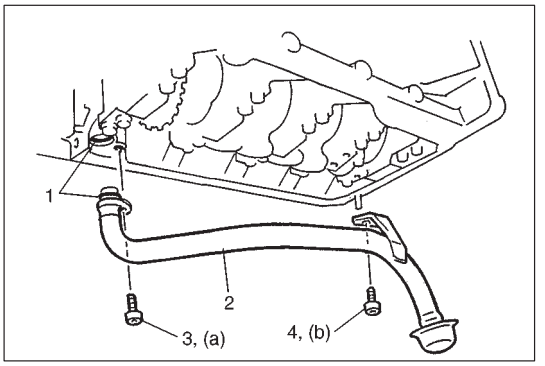

2) Install new O-rings (1) in the position as shown in figure and install oil pump strainer (2).
   Tighten strainer bolt (3) first and then bracket bolt (4) to specified torque.

   Tightening Torque
   (a): 11 N·m (1.1 kg-m, 8.0 lb-ft)
   (b): 11 N·m (1.1 kg-m, 8.0 lb-ft)

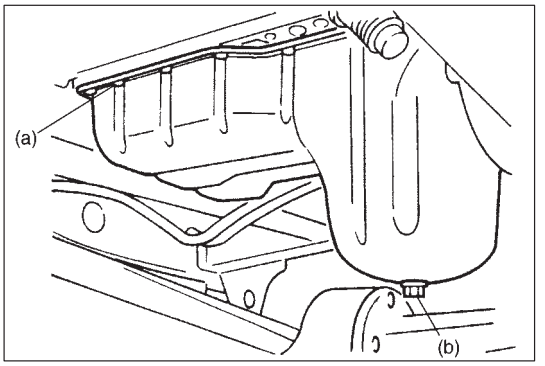

3) After fitting oil pan to cylinder block, run in securing bolts and start tightening at the center:
   move wrench outward, tightening one bolt at a time. Tighten bolts and nuts to specified torque.

   Tightening Torque
   (a): 11 N·m (1.1 kg-m, 8.0 lb-ft)

4) Install new gasket and drain plug to oil pan.
   Tighten drain plug to specified torque.

   Tightening Torque
   (b): 50 N·m 5.0 kg-m, 36.5 lb-ft)

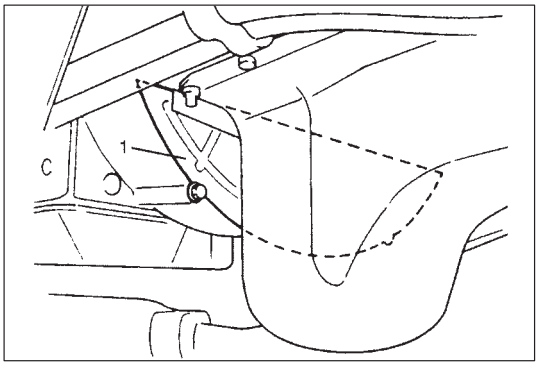

5) Install clutch housing (torque converter housing for A/T vehicle) lower plate (1).

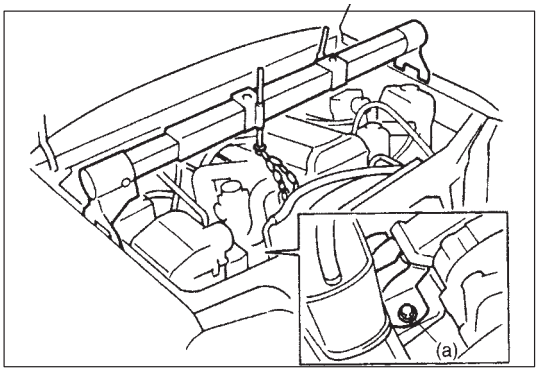

6) Lower engine and tighten engine mounting bracket bolts to specified torque.

   Tightening Torque
   (a): 50 N·m 5.0 kg-m, 36.5 lb-ft)

7) Install oil level gauge.
8) Refill engine with engine oil referring to "ENGINE OIL CHANGE" in Section 0B.
9) Verify that there is no engine oil leakage at each connection.

TIMING CHAIN COVER

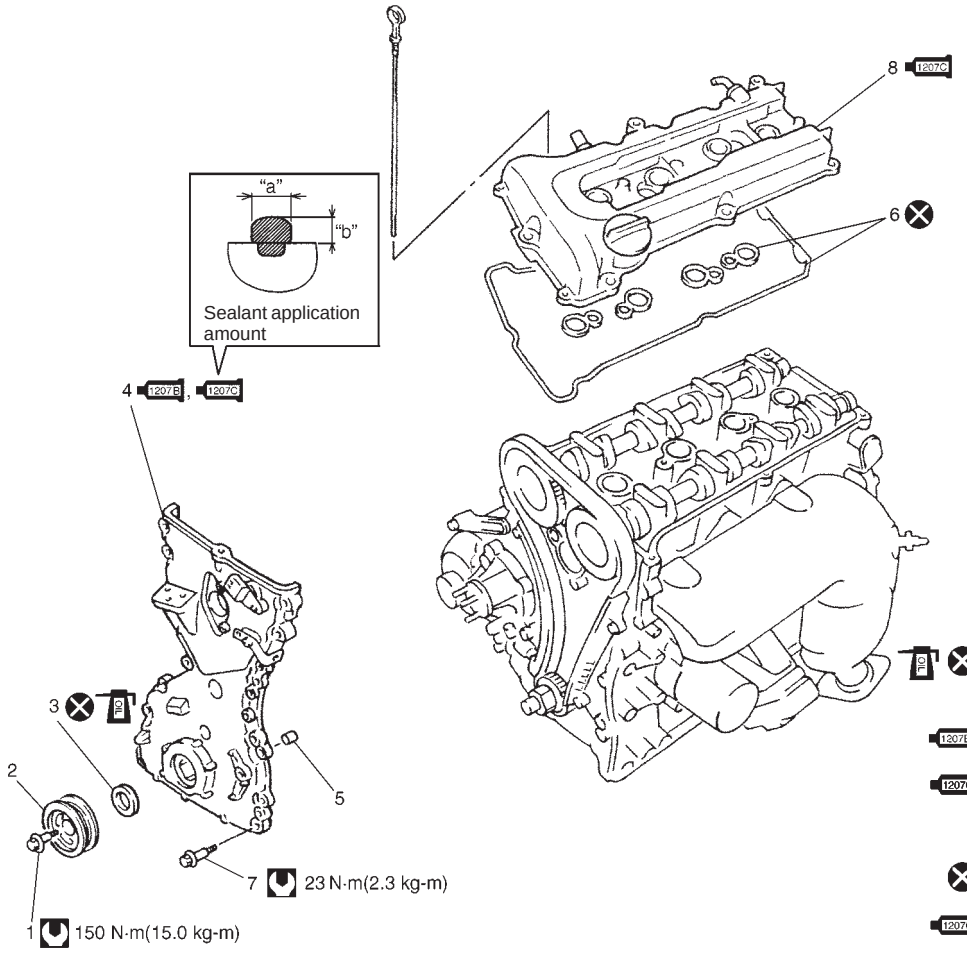

Width "a" : 3mm, 0.12 in.
Height "b": 2mm, 0.08 in.

1. Crankshaft pulley bolt
2. Crankshaft pulley
3. Oil seal:
   Apply engine oil to oil seal lip.
4. Timing chain cover:
   1207B Apply sealant 99000-31140 to the mating surface of cylinder and cylinder head.
   1207C Apply sealant 99000-31150 to the mating surface of timing chain cover referring to the figure of Step 1) in INSTALLATION.
5. Pin
6. Cylinder head gasket
7. Timing chain cover mounting bolts
8. 1207C Cylinder head cover:
   Apply sealant 99000-31150 to the sealing point for timing chain cover mating surface and cylinder head gasket sealing point.
   Refer to cylinder head cover installation.

: Tightening Torque
: Do not reuse

REMOVAL

1) Disconnect negative cable at battery.
2) Remove A/C compressor and/or P/S pump belt (if equipped).
3) Remove generator belt.
4) Drain engine oil.

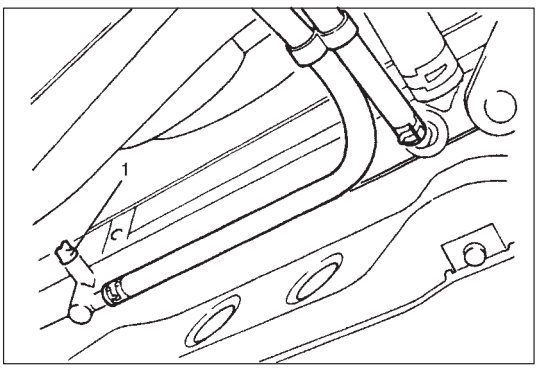

5) Drain coolant.

WARNING:
To help avoid danger of being burned, do not remove drain plug (1) and radiator cap while engine and radiator are still hot. Scalding fluid and steam can be blown out under pressure if plug and cap are taken off to soon.

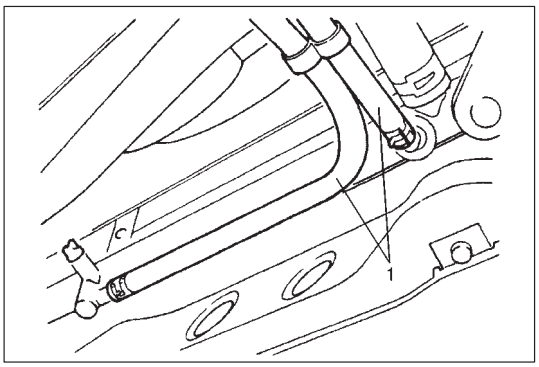

6) Disconnect radiator inlet and outlet hoses from each pipe.
7) Disconnect A/T fluid hoses (1) (vehicle with A/T) and release its clamps. Place some container under radiator to receive A/T fluid which will flow out when hose is disconnected.

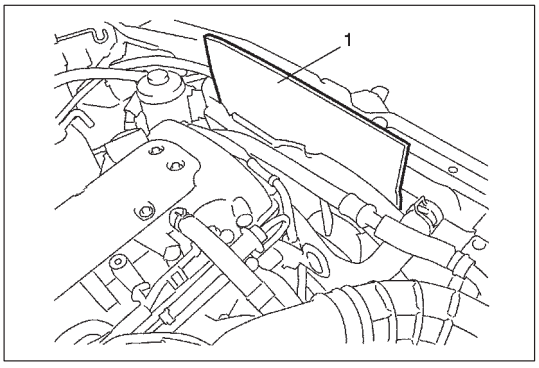

8) Remove fan shroud upper bolts and install board (1) or the like. This prevents damage to radiator fins when removing and installing radiator.
9) Remove radiator with cooling fan referring to Section 6B. Then remove water pump pulley.

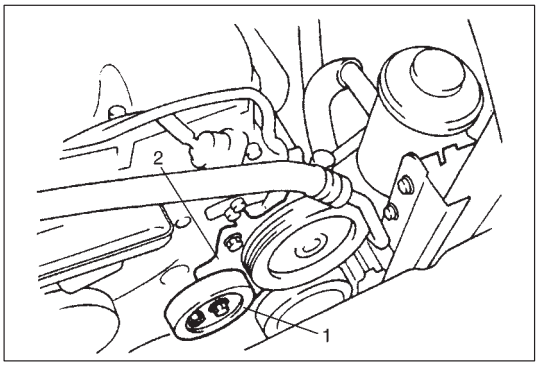

10) Remove A/C compressor and/or P/S pump belt tension pulley (1) (if equipped).
11) With hose connected, detach P/S pump from its bracket and then remove P/S pump bracket (2) (if equipped) referring to Section 3B1.

NOTE:
Suspend removed P/S pump at a place where no damage will be caused during removal and installation of timing chain cover.

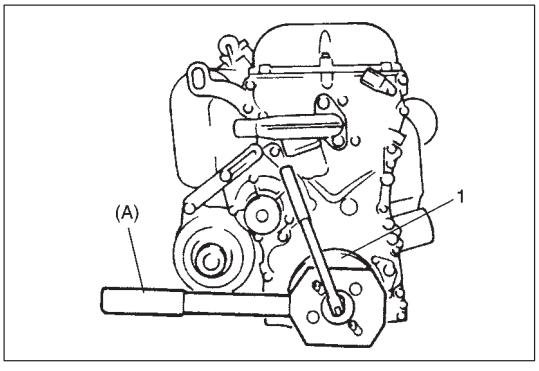

12) Remove crankshaft pulley bolt.
To lock crankshaft pulley (1), use special tool with it as shown in figure.

Special Tool
(A): 09917-68221

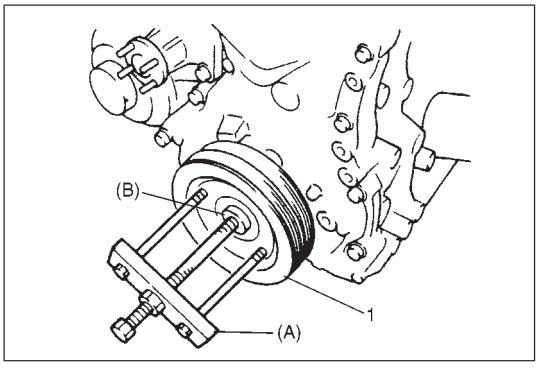

13) Remove crankshaft pulley (1).
If it is hard to remove, use special tools as shown in figure.
If bolts of special tool are too long, replace them with those of suitable length.

Special Tool
(A): 09944-36011
(B): 09926-58010

14) Remove oil pan referring to “OIL PAN AND OIL PUMP STRAINER” in this section.
15) Remove cylinder head cover referring to “CYLINDER HEAD COVER” in this section.

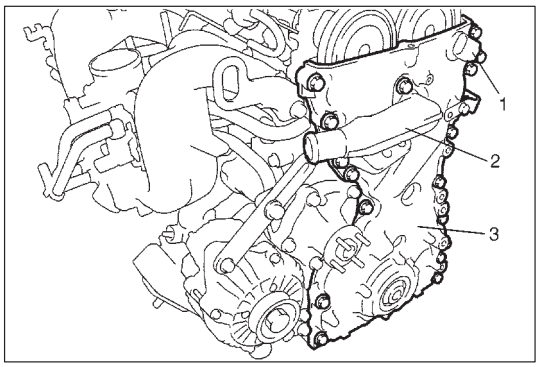

16) Disconnect CMP sensor coupler (1) and release its harness clamps.
17) Remove water outlet pipe (2).
18) Remove timing chain cover (3).

CLEAN

- Clean sealing surface on timing chain cover, cylinder block and cylinder head.
  Remove oil, old sealant and dust from sealing surface.

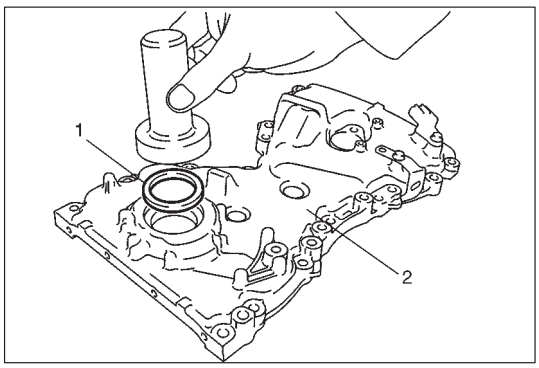

INSPECTION

- Check oil seal (1) lip for fault or other damage.
  Replace as necessary.

  NOTE:
  When installing new oil seal, tap it in until its surface is flash with edge of timing chain cover (2).
  To install oil seal, use special tool (Bearing installer).

  Special Tool
  (A): 09913-75520

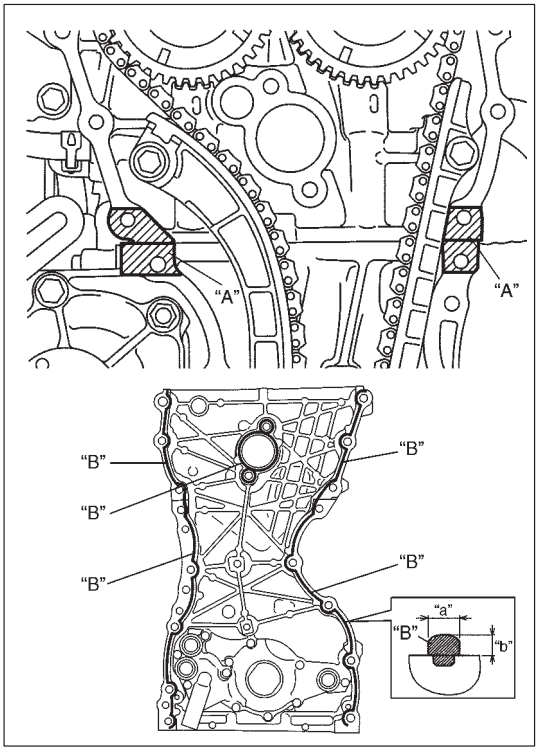

INSTALLATION

Reverse removal procedure to install timing chain cover, noting the following points.

1) Apply sealant "A" to mating surface of cylinder and cylinder head and "B" to mating surface of timing chain cover as shown in figure.

   "A": Sealant 99000-31140
   "B": Sealant 99000-31150

   Width "a" : 3 mm, 0.12 in.
   Height "b" : 2 mm, 0.08 in.

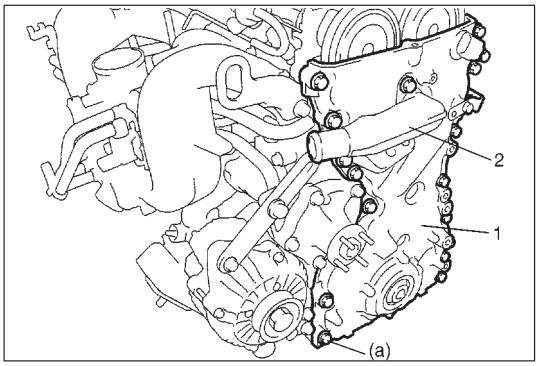

2) Apply engine oil to oil seal lip, then install timing chain cover (1) and water outlet pipe (2).
   Tighten bolts and nut to specified torque.

   NOTE:
   Before installing timing chain cover, check that pin is securely fitted.

   Tightening Torque
   (a): 23 N·m (2.3 kg-m, 17.0 lb-ft)

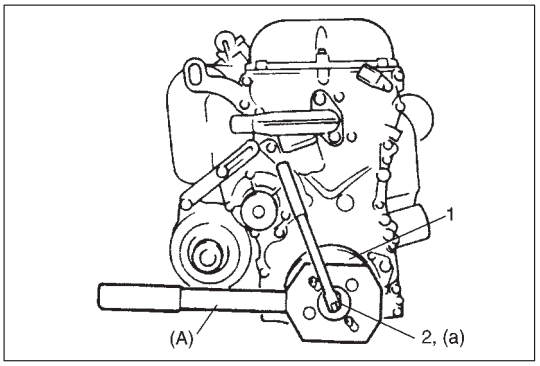

3) Install crankshaft pulley (1). Tighten bolt (2) to specified torque. To lock crankshaft pulley, use special tool with it as shown in figure.

   Special Tool
   (A): 09917-68221

   Tightening Torque
   (a): 150 N·m 15.0 kg-m, 108.5 lb-ft)

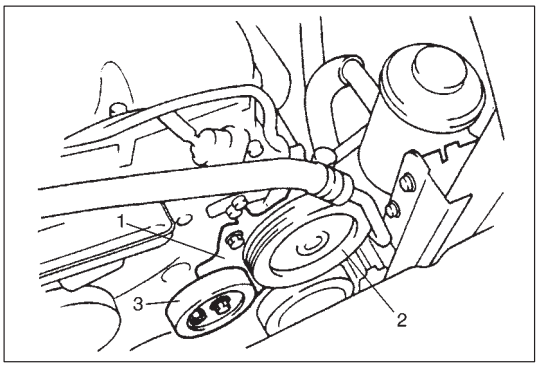

4) Install P/S pump bracket (1), P/S pump (2) and A/C compressor and/or P/S pump belt tension pulley (3) (if equipped) referring to Section 3B1.

5) Install cylinder head cover referring to “CYLINDER HEAD COVER” in this section.
6) Install oil pan referring to “OIL PAN AND OIL PUMP STRAINER” in this section.
7) Install radiator with cooling fan and connect A/T fluid hoses (vehicle with A/T), radiator inlet and outlet hoses referring to Section 6B.
8) Adjust generator belt tension referring to Section 6B for adjusting procedure.
9) Adjust A/C compressor and/or P/S pump belt tension (if equipped) referring to Section 1B or 3B1 for adjusting procedure.
10) Refill cooling system with coolant, engine with engine oil and A/T with specified A/T fluid (vehicle with A/T).
11) Verify that there is no coolant leakage, oil leakage and A/T fluid leakage (vehicle with A/T) at each connection.

OIL PUMP

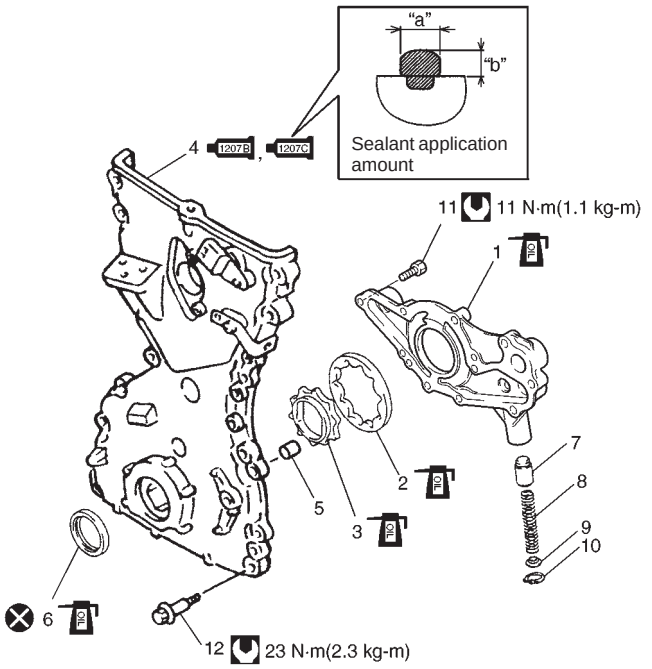

Width "a" : 3mm, 0.12 in.
Height "b": 2mm, 0.08 in.

1. Rotor plate
2. Outer rotor
3. Inner rotor
4. Timing chain cover:
   Apply sealant 99000-31140 to the mating surface of cylinder and cylinder head.
   Apply sealant 99000-31150 to mating surface of timing chain cover referring to the figure of Step 1) in "TIMING CHAIN COVER INSTALLATION".
5. Pin
6. Oil seal
7. Relief valve
8. Spring
9. Retainer
10. Circlip
11. Oil pump mounting bolt
12. Timing chain cover mounting bolts

: Tightening Torque
: Do not reuse
: Apply thin coat of engine oil to sliding surface of each parts.

REMOVAL

1) Disconnect negative cable at battery.
2) Remove timing chain cover, referring to TIMING CHAIN COVER in this section.

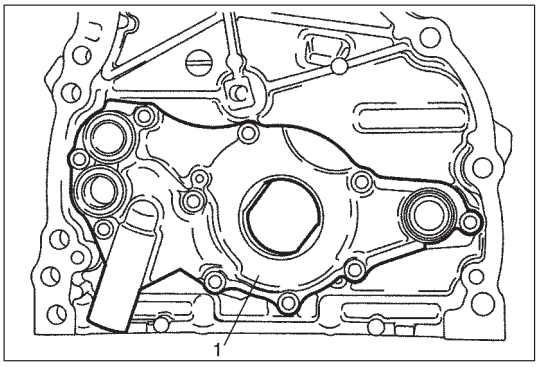

DISASSEMBLY

1) Remove rotor plate (1) by removing its mounting bolts.

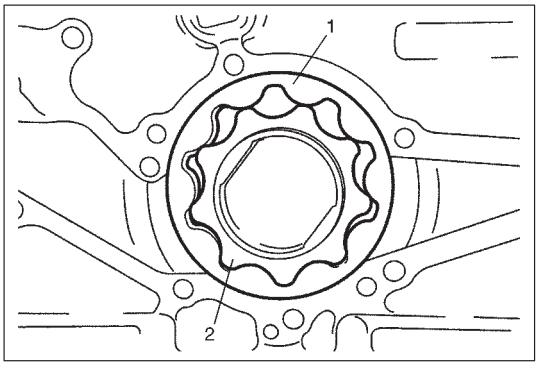

2) Remove outer rotor (1) and inner rotor (2).

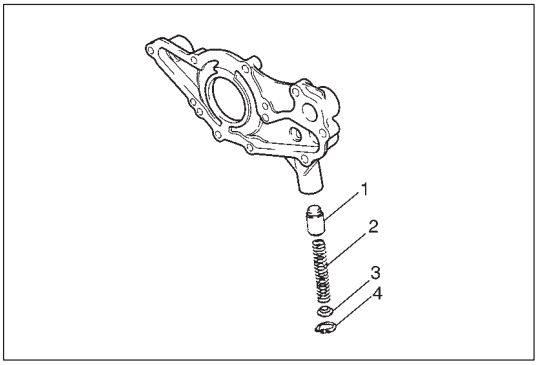

3) Remove relief valve (1), spring (2) and retainer (3) by removing circlip (4).

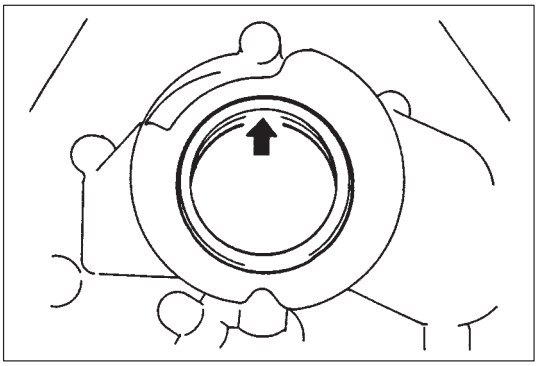

INSPECTION

- Check oil seal lip for fault or other damage. Replace as necessary.

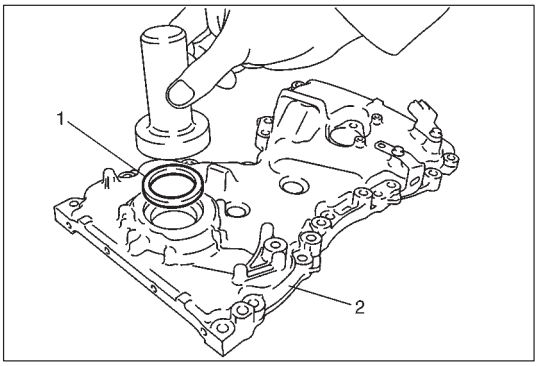

NOTE:
When installing new oil seal (1), press-fit it till its end face is flush with oil pump case (2) end face.

Special Tool
(A): 09913-75520

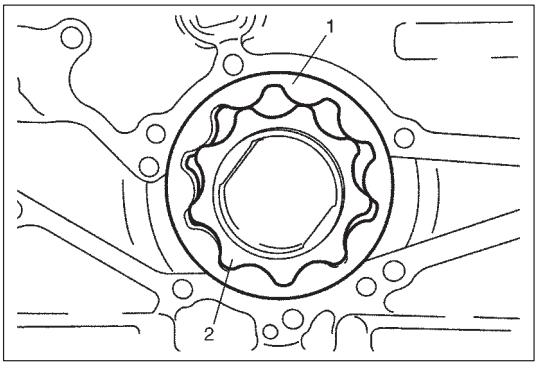

- Check outer (1) and inner rotors (2), rotor plate, and oil pump case for excessive wear or damage.

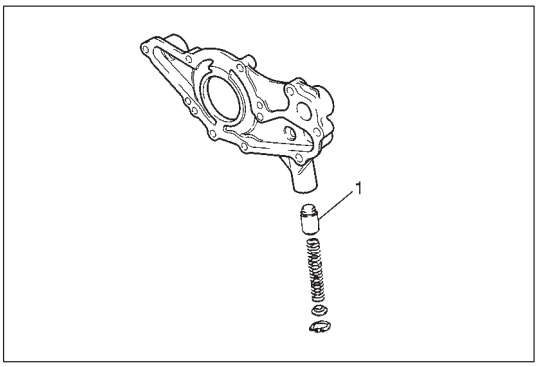

- Check relief valve (1) for excessive wear or damage and operates smoothly.

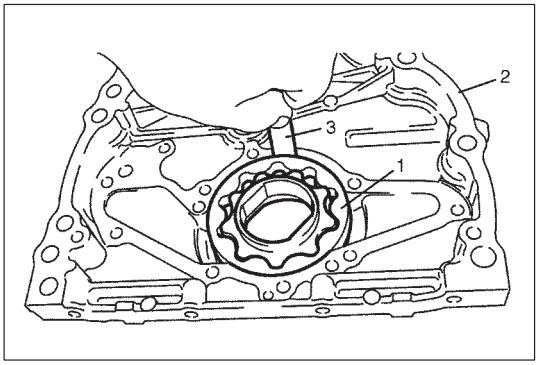

MEASUREMENT

- **Radial clearance**

  Check radial clearance between outer rotor (1) and case (2), using thickness gauge (3).
  If clearance exceeds its limit, replace outer rotor or case.

  Limit on radial clearance between outer rotor and case: 0.310 mm (0.0122 in.)

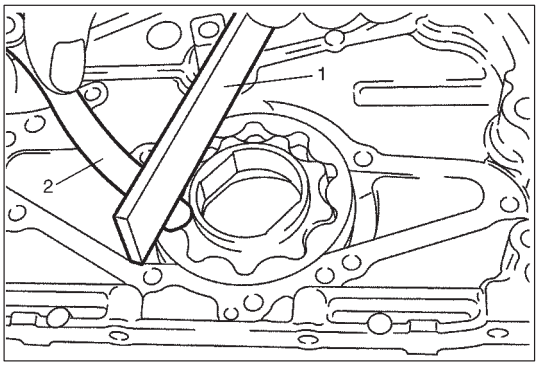

- **Side clearance**

  Using straight edge (1) and thickness gauge (2), measure side clearance.

  Limit on side clearance: 0.15 mm (0.0059 in.)

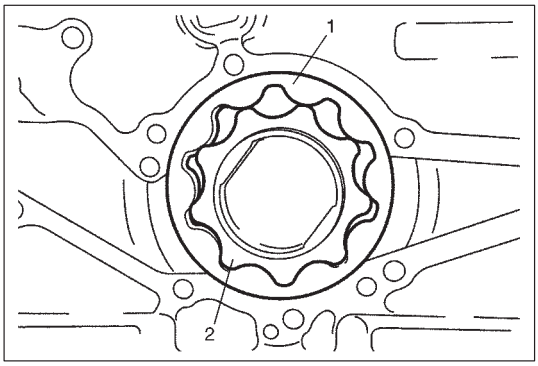

ASSEMBLY

1) Wash, clean and then dry all disassembled parts.
2) Apply thin coat of engine oil to inner and outer rotors, oil seal lip portion, and inside surfaces of oil pump case and plate.
3) Install outer (1) and inner rotors (2) to oil pump case.

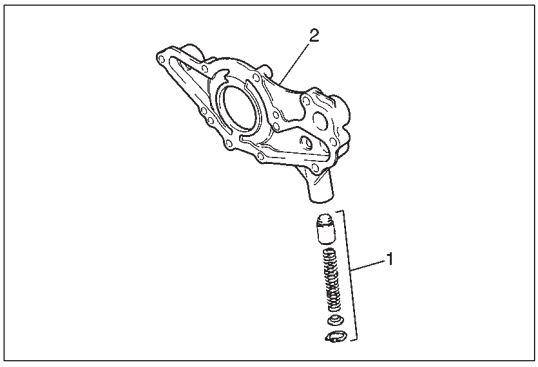

4) Install relief valve component (1) to rotor plate (2).

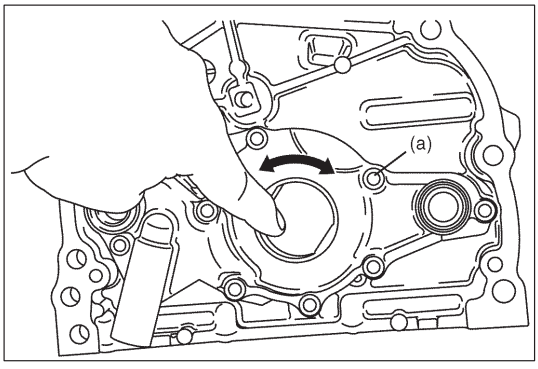

5) Install rotor plate and tighten all bolts to specified torque.
   After installing plate, check to be sure that rotors turn smoothly by hand (0.3 N·m (0.03 kg-m, 0.25 lb-ft) torque or below).

   Tightening Torque
   (a): 11 N·m (1.1 kg-m, 8.0 lb-ft)

INSTALLATION

For installation referring to “TIMING CHAIN COVER” in this section.

TIMING CHAIN AND CHAIN TENSIONER

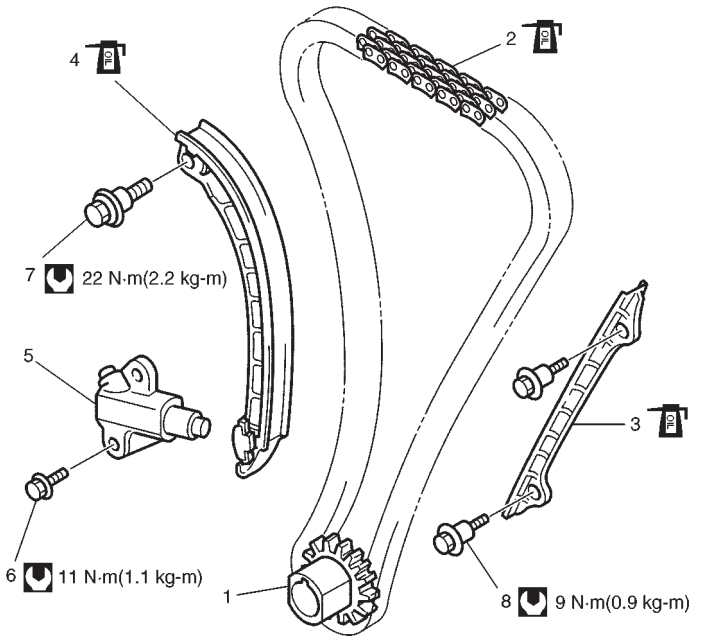

1. Crankshaft timing sprocket
2. Timing chain: Apply engine oil.
3. Timing chain No.1 guide: Apply engine oil to sliding surface.
4. Timing chain tensioner: Apply engine oil to sliding surface.
5. Timing chain tensioner adjuster assembly
6. Chain tensioner adjuster mounting bolt
7. Chain tensioner mounting bolt
8. Chain guide mounting bolt

: Tightening Torque

REMOVAL

1) Disconnect negative cable at battery.
2) Drain engine oil.
3) Drain coolant.
4) Remove oil pan referring to “OIL PAN AND OIL PUMP STRAINER” in this section.
5) Remove cylinder head cover referring to “CYLINDER HEAD COVER” in this section.
6) Remove timing chain cover referring to “TIMING CHAIN COVER” in this section.

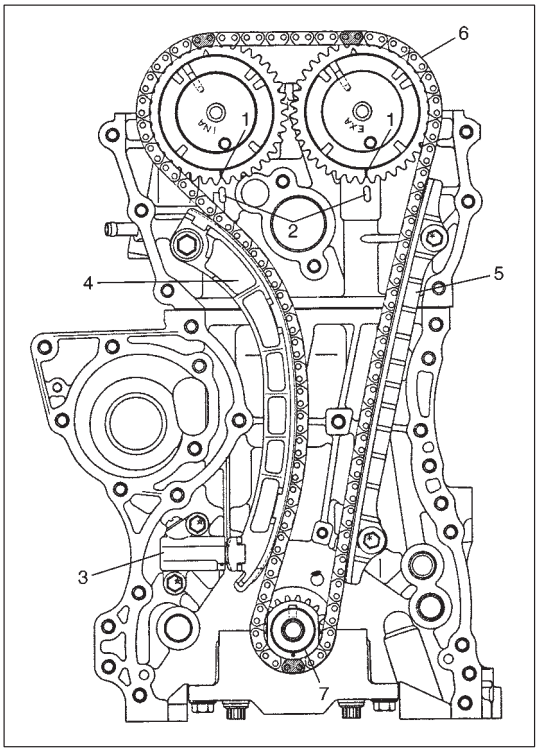

7) Align both intake and exhaust camshaft timing sprocket marks (1) with notches (2) of cylinder head respectively by turning crankshaft.
8) Remove timing chain tensioner adjuster assembly (3).
9) Remove timing chain tensioner (4).
10) Remove timing chain No.1 guide (5).
11) Remove timing chain (6) with crankshaft timing sprocket (7).

CAUTION:
After timing chain is removed, never turn crankshaft and camshafts independently.
If turned, interference may occur between piston and valves and valves themselves, and parts related to piston and valves may be damaged.

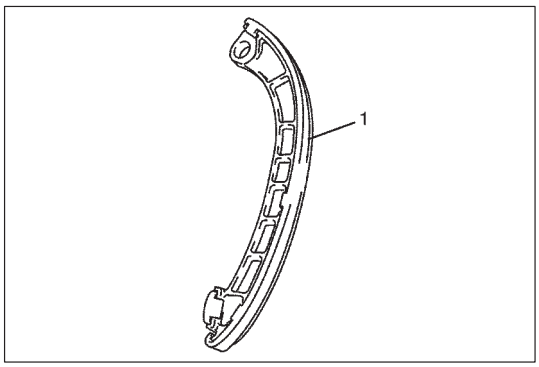

INSPECTION

Timing chain tensioner

- Check shoe (1) for wear or damage.

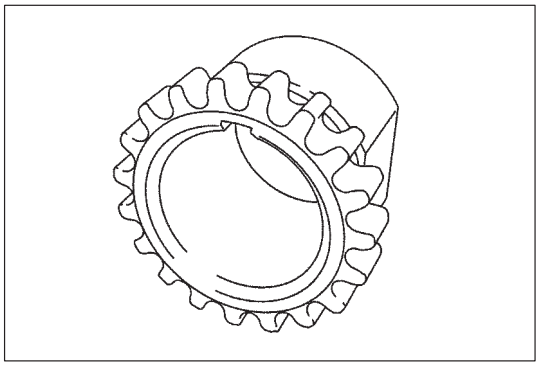

Crankshaft timing sprocket

- Check teeth of sprocket for wear or damage.

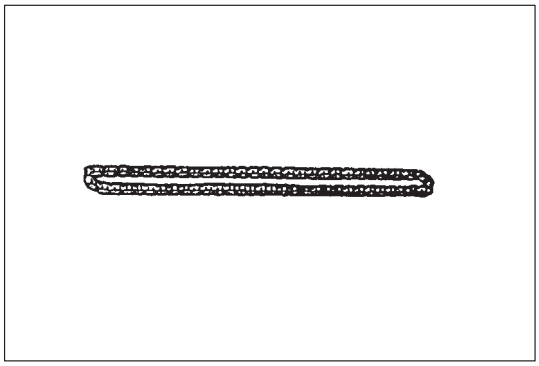

Timing chain

- Check timing chain for wear or damage.

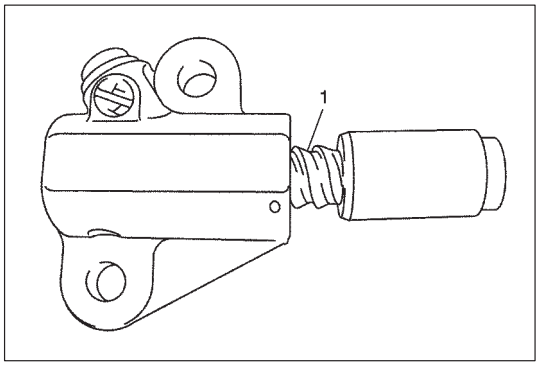

Timing chain tensioner adjuster

- Check that tooth surface (1) are free from damage.

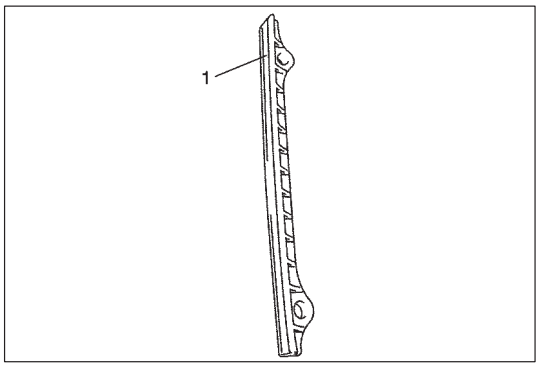

Timing chain No.1 guide

- Check shoe (1) for wear or damage.

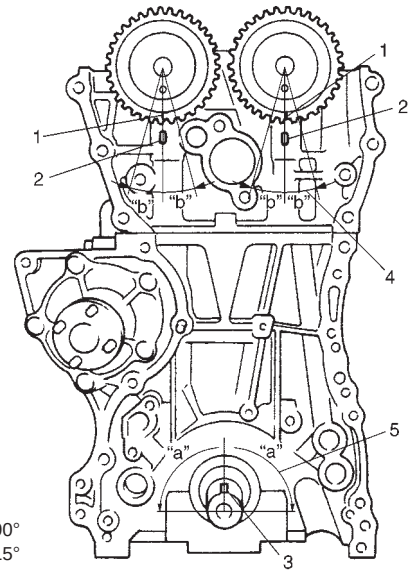

"a": 90°
"b": 15°

4. Camshaft (IN and EX) allowable turning range.....
   By marks on camshaft timing sprocket within 15° from notches on cylinder head on both right and left.
5. Crankshaft allowable turning range.....
   By key on crankshaft, within 90° from top on both right and left.

INSTALLATION

CAUTION:
After timing chain is removed, never turn crankshaft and camshafts independently more than such an extent ("a", "b") as shown in figure.
If turned, interference may occur between piston and valves and valves themselves, and parts related to piston and valves may be damaged.

1) Check that match marks (1) on intake and exhaust camshaft timing sprockets are in match with notches (2) on cylinder head as shown in figure.
2) Set key (3) and turn crankshaft to position key on upside of crankshaft.

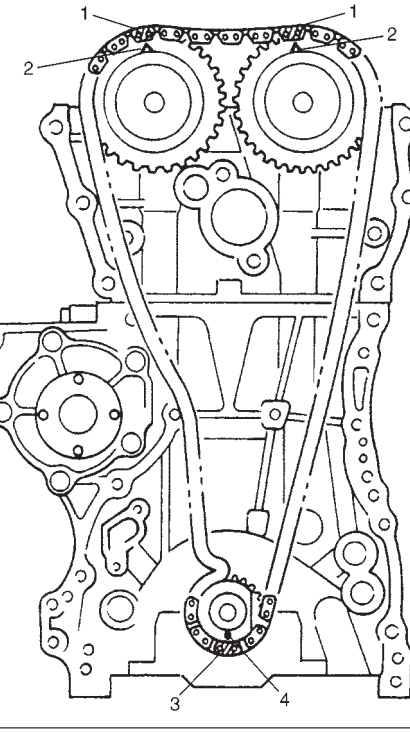

3) Install timing chain by aligning dark blue plate (1) of timing chain and triangle mark (2) on camshaft timing sprocket as shown in figure.
4) Fit crankshaft timing sprocket to timing chain by aligning gold plate (3) of timing chain and mark (4) on crankshaft timing sprocket. Then install crankshaft timing sprocket fitted with chain to crankshaft.

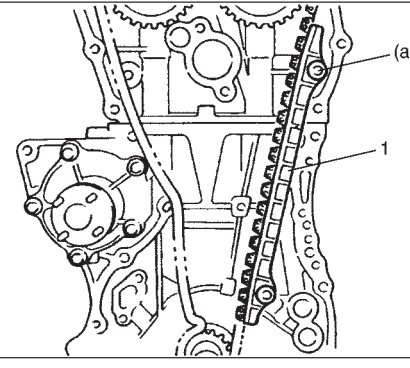

5) Apply engine oil to sliding surface of timing chain No.1 guide (1) and install it as shown in figure.
   Tighten guide bolts to specified torque.

Tightening Torque
(a): 9 N·m (0.9 kg-m, 6.5 lb-ft)

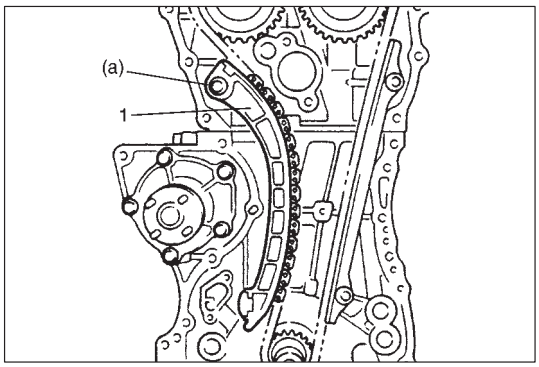

6) Apply engine oil to sliding surface of chain tensioner (1) and install chain tensioner and spacer.
Tighten tensioner bolt to specified torque.

Tightening Torque
(a): 22 N·m (2.2 kg-m, 16.0 lb-ft)

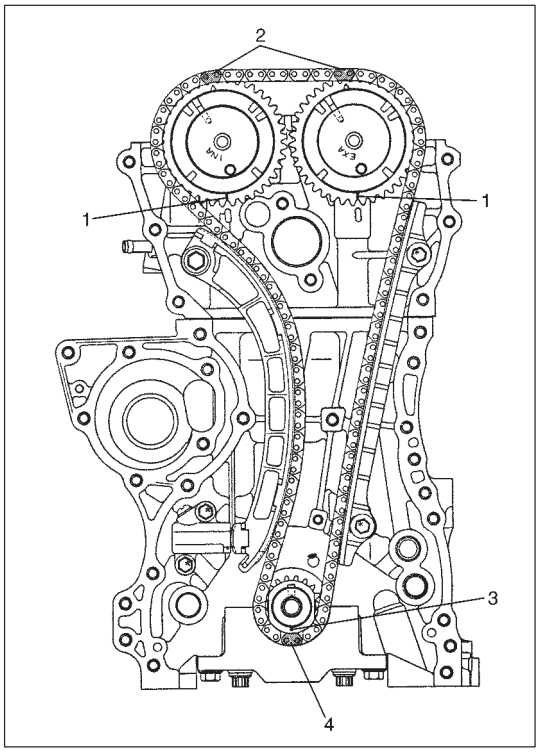

7) Check that match marks (1) on intake and exhaust camshaft timing sprockets are in match with making timing chain (2) and match mark on crankshaft timing sprocket (3) are in with marking timing chain(4).

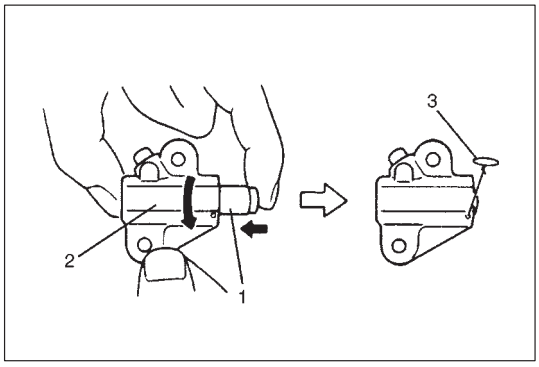

8) Screw in plunger (1) by turning body (2) in arrow direction and install a retainer (3) (wire) to hold plunger in place.

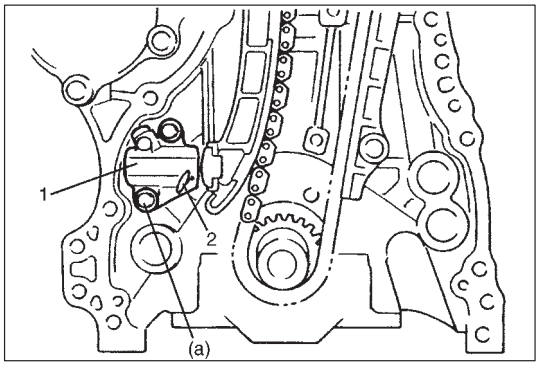

9) Install timing chain tensioner adjuster assembly (1) with a retainer (2).
Tighten adjuster bolts to specified torque and then remove a retainer from chain tensioner adjuster assembly.

Tightening Torque
(a): 11 N·m (1.1 kg-m, 8.0 lb-ft)

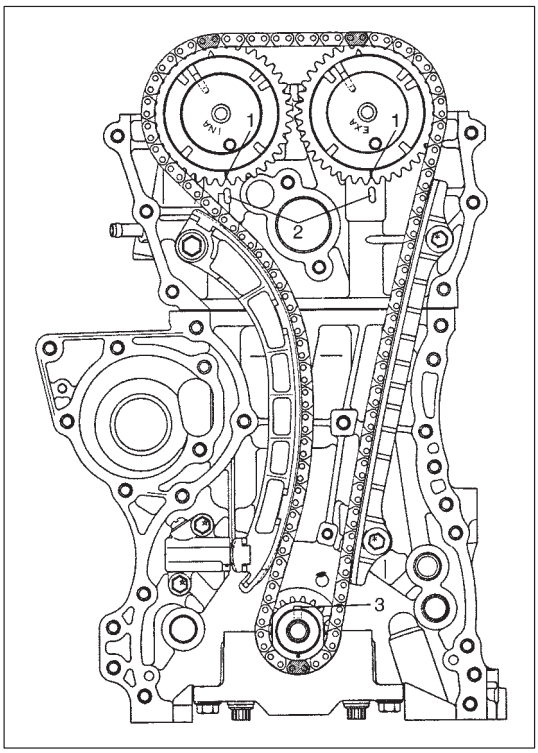

10) Apply engine oil to timing chain and then turn crankshaft clockwise by 2 revolutions and check that match marks (1) on intake and exhaust camshaft timing sprockets are in match with notches (2) on cylinder head and key(3) is on upside of crankshaft as shown in figure.
    If each marking chain and each match mark are no maches, adjust each sprockets and timing chain.
11) Install timing chain cover referring to “TIMING CHAIN COVER” in this section.
12) Install cylinder head cover referring to “CYLINDER HEAD COVER” in this section.
13) Install oil pan referring to “OIL PAN AND OIL PUMP STRAINER” in this section.
14) Install radiator with cooling fan and connect A/T fluid hoses (vehicle with A/T), radiator inlet and outlet hoses referring to Section 6B.
15) Adjust generator belt tension referring to Section 6B.
16) Adjust A/C compressor and/or P/S pump belt tension (if equipped) referring to Section 1B or 3B1.
17) Refill cooling system with coolant, engine with engine oil and A/T with specified A/T fluid (vehicle with A/T).
18) Verify that there is no coolant leakage, oil leakage and A/T fluid leakage (vehicle with A/T) at each connection.

CAMSHAFT, TAPPET AND SHIM

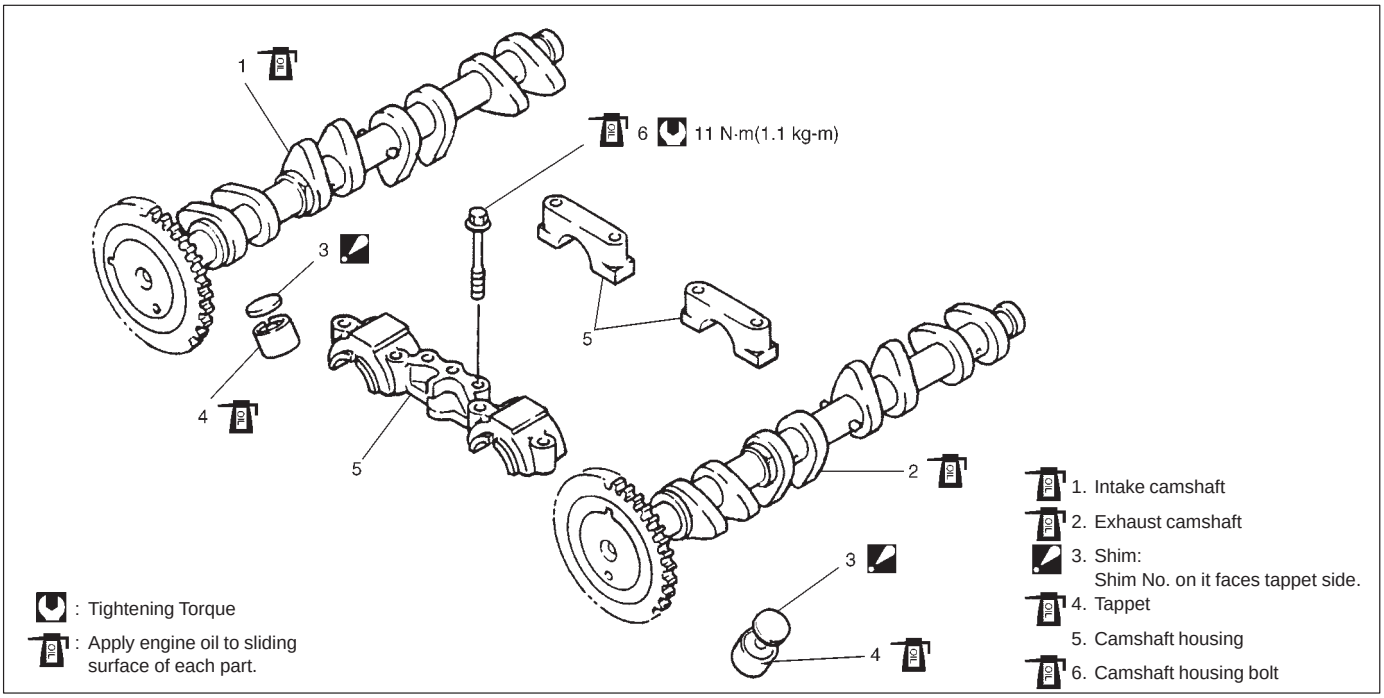

REMOVAL

1) Remove cylinder head cover and oil pan as previously outlined.
2) Remove timing chain cover referring to “TIMING CHAIN COVER” in this section.
3) Remove timing chain referring to “TIMING CHAIN AND CHAIN TENSIONER” in this section.

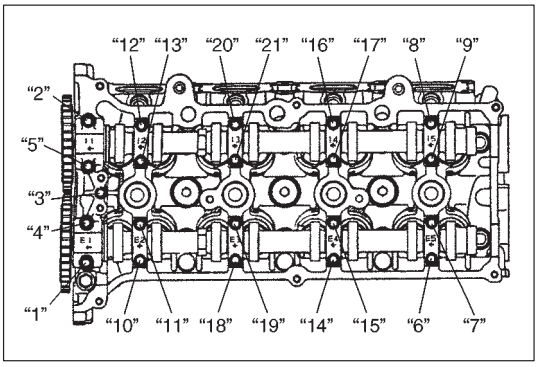

4) Loosen camshaft housing bolts in such order as indicated in figure and remove them.
5) Remove camshaft housings.
6) Remove intake and exhaust camshafts.

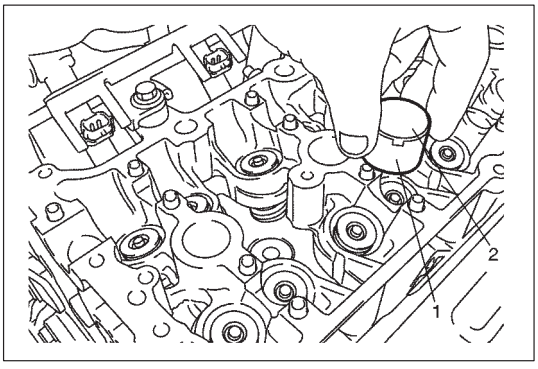

7) Remove tappets (1) with shims (2).

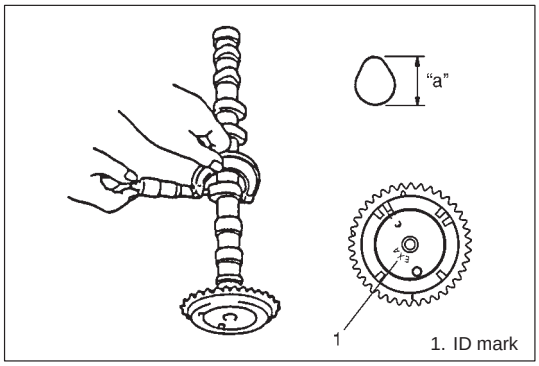

INSPECTION

Cam Wear

Using a micrometer, measure cam height "a". If measured height is below its limit, replace camshaft.

Cam height	Standard	Limit
Intake cam	44.919 – 45.089 mm (1.768 – 1.775 in.)	44.81 mm (1.764 in.)
Exhaust cam (ID mark on sprocket: EXA)	44.202 – 44.362 mm (1.740 – 1.747 in.)	44.08 mm (1.735 in.)
Exhaust cam (ID mark on sprocket: EXB)	44.399 – 44.559 mm (1.748 – 1.754 in.)	44.28 mm (1.743 in.)

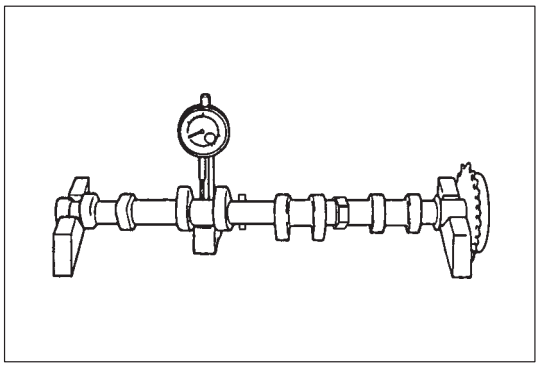

Camshaft Runout

Set camshaft between two "V" blocks, and measure its runout by using a dial gauge.

If measured runout exceeds below limit, replace camshaft.

Runout limit: 0.10 mm (0.0039 in.)

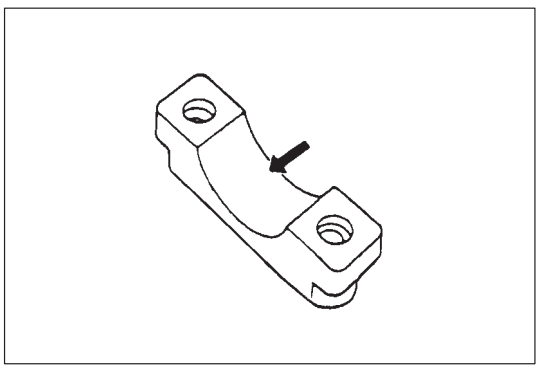

Camshaft Journal Wear

Check camshaft journals and camshaft housings for pitting, scratches, wear or damage.

If any malcondition is found, replace camshaft or cylinder head with housing. Never replace cylinder head without replacing housings.

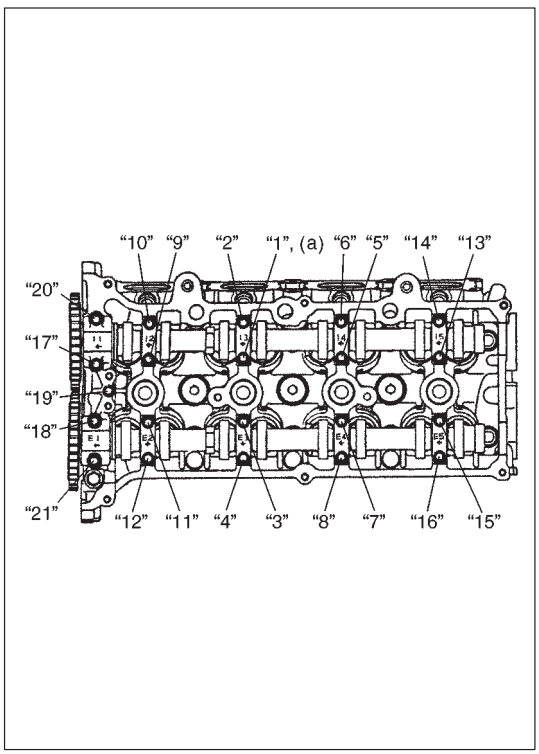

Check clearance by using gaging plastic. Checking procedure is as follows.

1) Clean housings and camshaft journals.
2) Remove all tappets with shims.
3) Install camshafts to cylinder head.
4) Place a piece of gaging plastic to full width of journal of camshaft (parallel to camshaft).
5) Install camshaft housing.
6) Tighten camshaft housing bolts in such order as indicated in figure a little at a time till they are tightened to specified torque.

NOTE:
Do not rotate camshaft while gaging plastic is installed.

Tightening Torque
(a): 11 N·m (1.1 kg-m, 8.0 lb-ft)

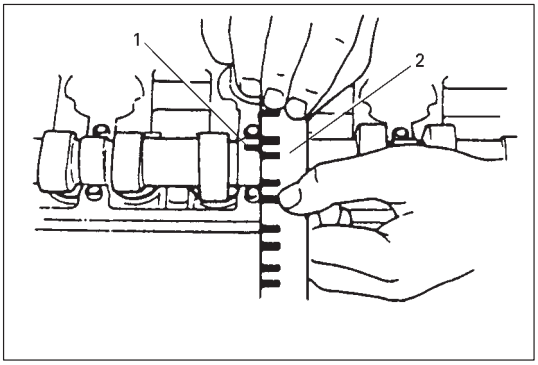

7) Remove housing, and using scale (2) on gaging plastic (1) envelop, measure gaging plastic width at its widest point.

		Standard	Limit
Journal clearance	Intake No.1	0.020 – 0.072 mm (0.0008 – 0.0028 in.)	0.12 mm
	Other	0.045 – 0.087 mm (0.0018 – 0.0034 in.)	

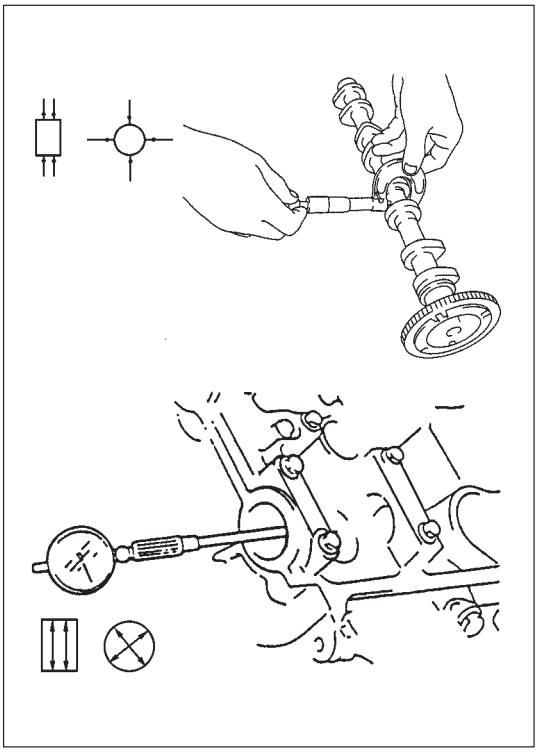

If measured camshaft journal clearance exceeds limit, measure journal (housing) bore and outside diameter of camshaft journal. Replace camshaft or cylinder head assembly whichever the difference from specification is greater.

Item		Standard
Camshaft journal O.D.	Intake No.1	26.940 – 26.955 mm (1.0606 – 1.0612 in.)
	Exhaust No.1	26.934 – 26.955 mm (1.0604 – 1.0612 in.)
	Other	22.934 – 22.955 mm (0.9029 – 0.9037 in.)
Camshaft journal bore dia.	Exhaust No.1	27.000 – 27.021 mm (1.0630 – 1.0638 in.)
	Other	23.000 – 23.021 mm (0.9055 – 0.9063 in.)

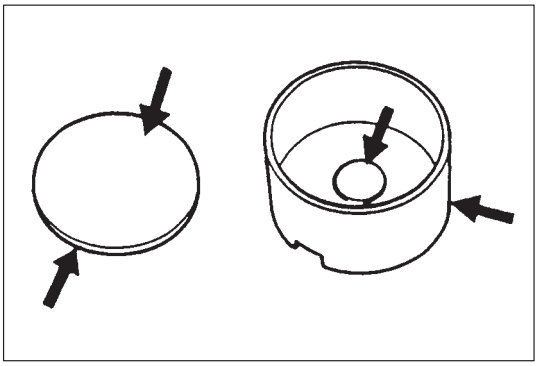

Wear of tappet and shim

Check tappet and shim for pitting, scratches or damage.
If any malcondition is found, replace.

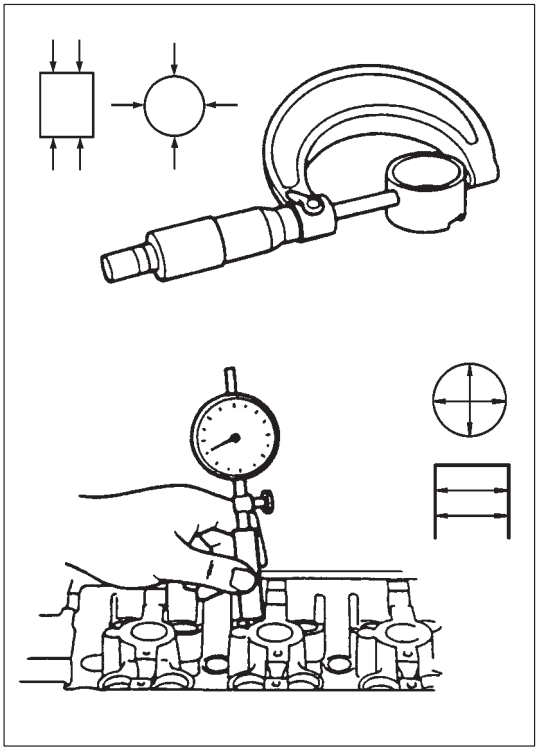

Measure cylinder head bore and tappet outside diameter to determine cylinder head-to-tappet clearance. If clearance exceeds limit, replace tappet or cylinder head.

Item	Standard	Limit
Tappet O.D.	30.959 – 30.975 mm (1.2189 – 1.2195 in.)	–
Cylinder head bore	31.000 – 31.025 mm (1.2205 – 1.2215 in.)	–
Cylinder head to tappet clearance	0.025 – 0.066 mm (0.0010 – 0.0026 in.)	0.15 mm (0.0059 in.)

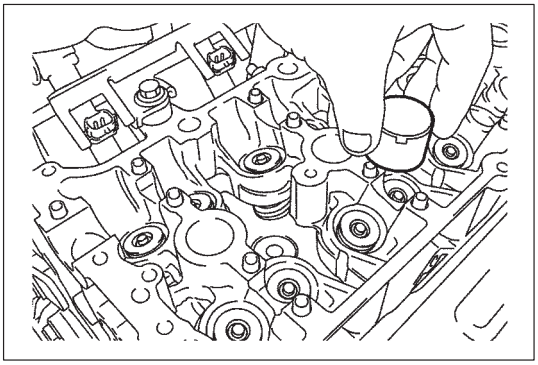

INSTALLATION

1) Install tappets and shims to cylinder head.
   Apply engine oil around tappet and then install it to cylinder head.

   NOTE:
   When installing shim, make sure to direct shim No. side toward tappet.

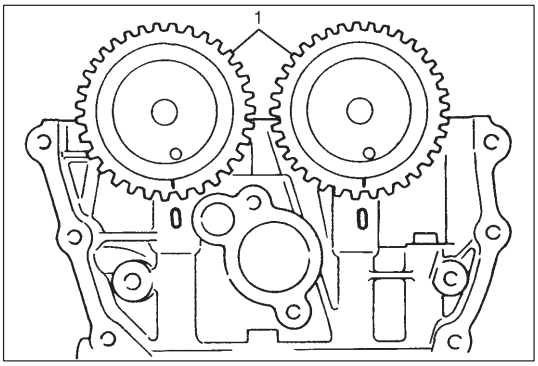

2) Install camshafts (1).

   NOTE :
   Before installing camshafts, turn crankshaft until key position faces upward. Refer to "TIMING CHAIN AND CHAIN TENSIONER".

   Apply engine oil to sliding surface of each camshaft and camshaft journal then install them as shown in figure.

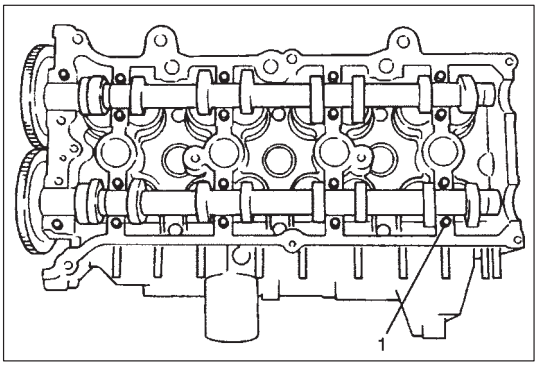

3) Install camshaft housing pins (1) as shown in figure.

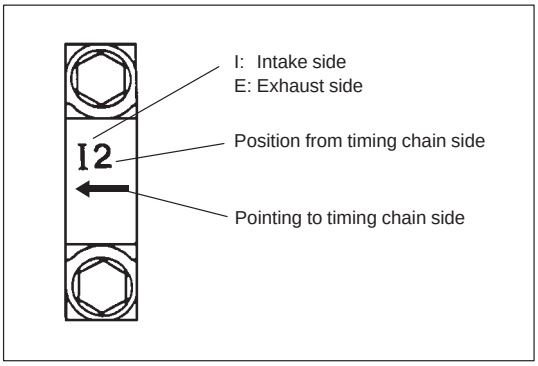

4) Check position of camshaft housings.
   Embossed marks are provided on each camshaft housing, indicating position and direction for installation. Install housings as indicated by these marks.

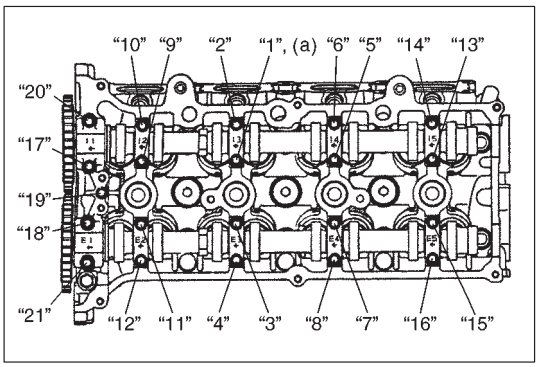

5) After applying engine oil to housing bolts, tighten them temporarily first. Then tighten them by the following numerical order in figure. Tighten a little at a time and evenly among bolts and repeat tightening sequence two or three times before they are tightened to specified torque.

   Tightening Torque
   (a): 11 N·m (1.1 kg-m, 8.0 lb-ft)

6) Install timing chain with crankshaft sprocket referring to "TIMING CHAIN AND CHAIN TENSIONER" in this section.
7) Install timing chain cover referring to "TIMING CHAIN COVER" in this section.
8) Check valve lashes as previously outlined.
9) Install cylinder head cover and oil pan as previously outlined.
10) Install radiator with cooling fan and connect A/T fluid hoses (vehicle with A/T), radiator inlet and outlet hoses referring to Section 6B.
11) Adjust generator belt tension referring to Section 6B.
12) Adjust A/C compressor and/or P/S pump belt tension (if equipped) referring to Section 1B or 3B1.
13) Refill cooling system with coolant, engine with engine oil and A/T with specified A/T fluid (vehicle with A/T).
14) Verify that there is no coolant leakage, oil leakage and A/T fluid leakage (vehicle with A/T) at each connection.

VALVES AND CYLINDER HEAD

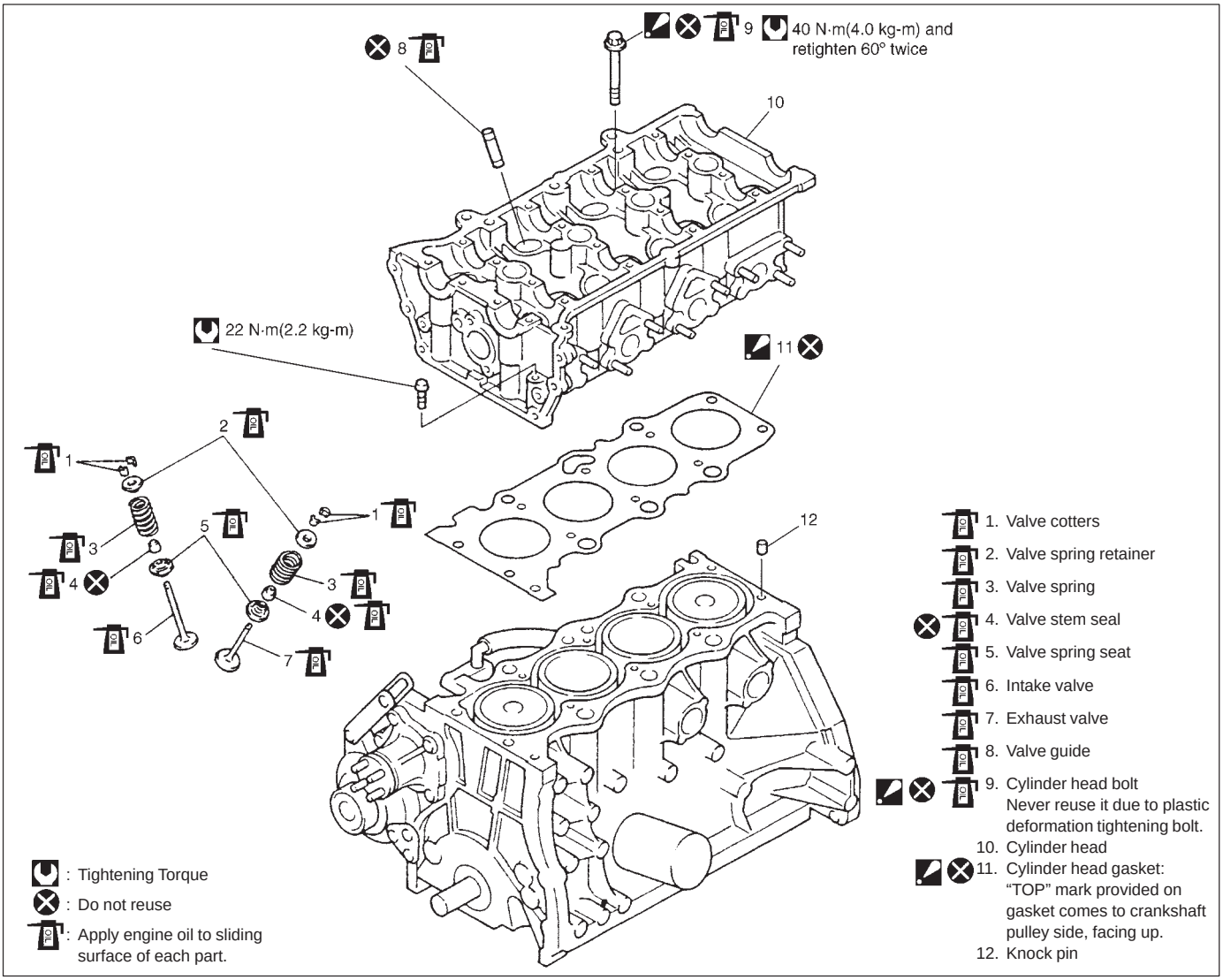

REMOVAL

1) Relieve fuel pressure according to procedure described in Section 6.
2) Disconnect negative cable at battery.
3) Drain engine oil.

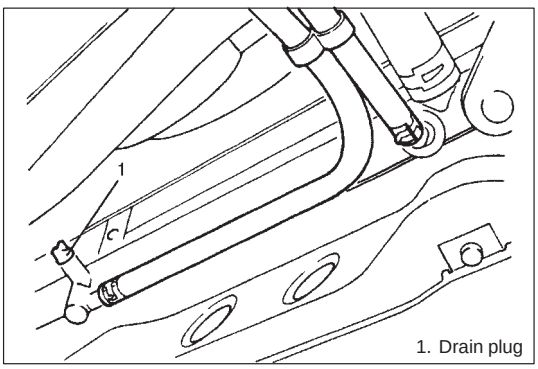

4) Drain coolant by loosening drain plug (1).

WARNING:
To help avoid danger of being burned, do not remove drain plug (1) and radiator cap while engine and radiator are still hot. Scalding fluid and steam can be blown out under pressure if plug and cap are taken off too soon.

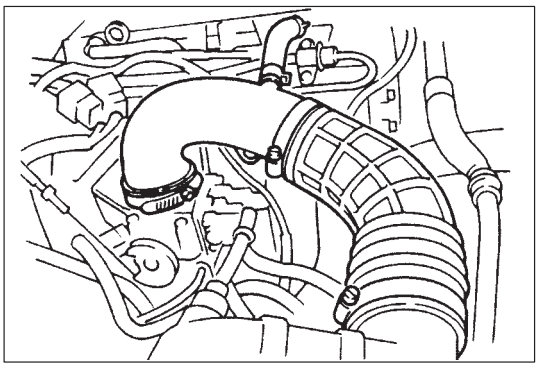

5) Remove air cleaner outlet No.1 and No.2 hoses and breather hose.

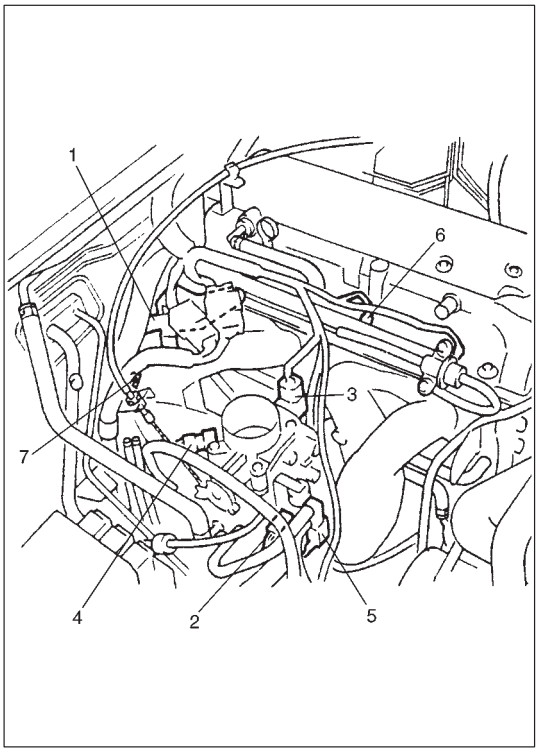

6) Remove intake manifold bracket (1) with main harness from intake manifold.
7) Disconnect the following electric lead wires:
   - EGR valve (if equipped)
   - IAC valve (2)
   - TP sensor (3)
   - MAP sensor (4)
   - CMP sensor
   - ECT sensor
   - EVAP canister purge valve (5)
   - Injectors (6)
   - Ignition coils
   - Heated oxygen sensor
   - Ground terminal (7) from intake manifold
   - Each wire harness clamps
8) Remove heated oxygen sensor bracket from cylinder head and detach heated oxygen sensor coupler from its bracket.

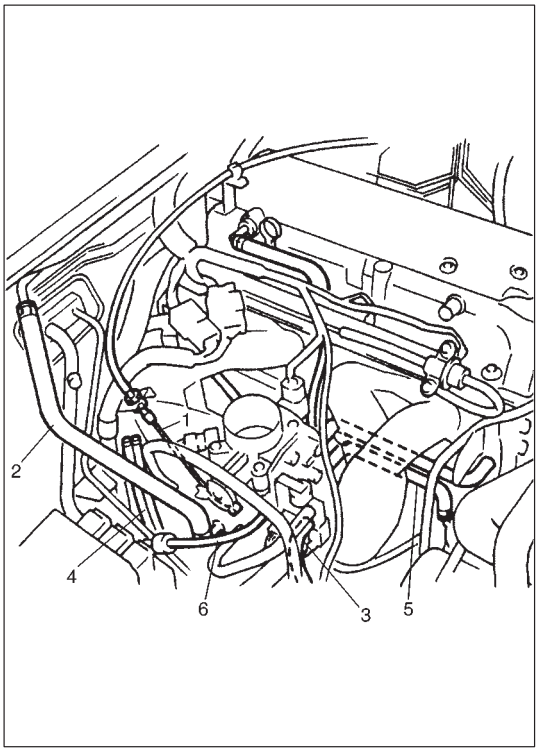

9) Disconnect accelerator cable (1) from throttle body.
10) Disconnect the following hoses:
    - Brake booster hose (2) from intake manifold
    - Canister purge hose (3) from EVAP canister purge valve
    - Fuel feed and return hoses (4) from each pipe
    - Water hose from thermostat case (5)
    - Heater inlet hose from its pipe
    - Vacuum hose (to check vale) (6)
11) Remove canister purge hose bracket from intake manifold.

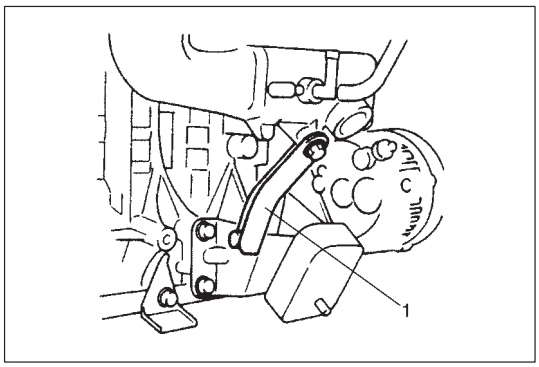

12) Remove intake manifold stiffener (1).

13) Remove oil pan referring to “OIL PAN AND OIL PUMP STRAINER” in this section.
14) Remove cylinder head cover referring to “CYLINDER HEAD COVER ” in this section.
15) Remove timing chain cover referring to “TIMING CHAIN COVER ” in this section.
16) Remove timing chain referring to “TIMING CHAIN AND CHAIN TENSIONER” in this section.
17) Remove intake and exhaust camshafts referring to “CAMSHAFT, TAPPET AND SHIM” in this section.

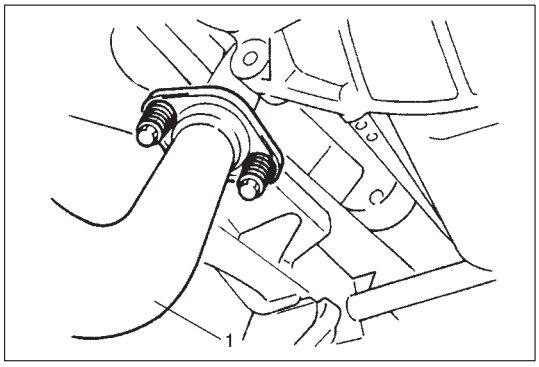

18) Disconnect exhaust pipe (1) from exhaust manifold.

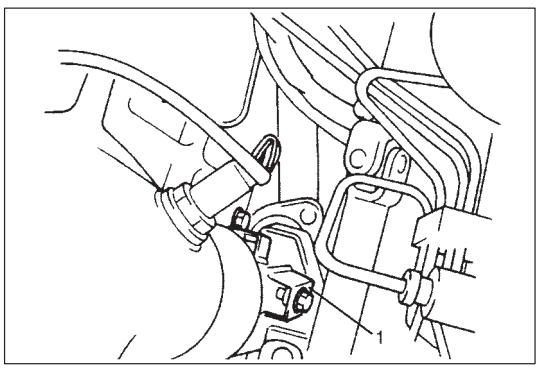

19) Remove exhaust manifold stiffener (1).

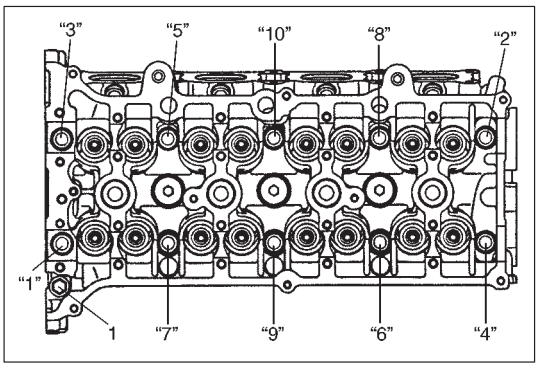

20) Loosen cylinder head bolts in such order as indicated in figure by using a 12 corner socket wrenches and remove them.

NOTE:

- **Don't forget to remove bolt (M6) (1) as shown in figure.**
- **Never reuse cylinder head bolts once disassembled it due to plastic deformation tightening. Be sure to use new cylinder head bolts when installing.**

21) Check all around cylinder head for any other parts required to be removed or disconnected and remove or disconnect whatever necessary.
22) Remove cylinder head with intake manifold and exhaust manifold. Use lifting device, if necessary.

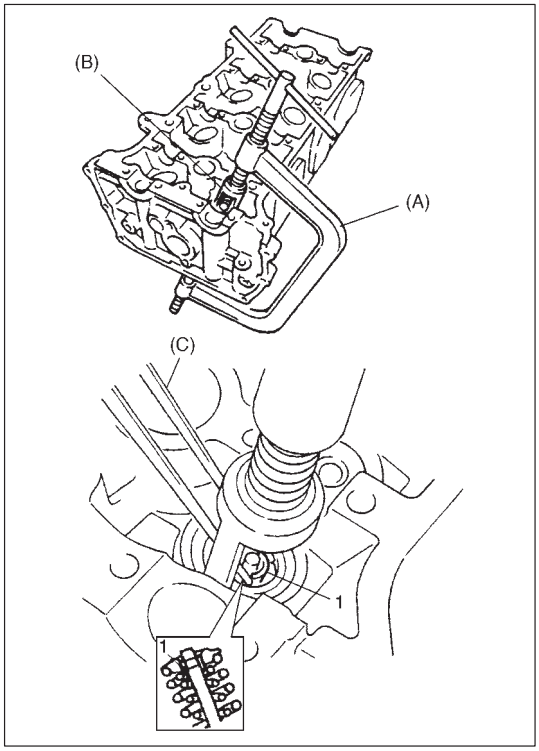

DISASSEMBLY

1) For ease in servicing cylinder head, remove intake manifold, injectors and exhaust manifold from cylinder head.
2) Using special tools (Valve lifter), compress valve spring and then remove valve cotters (1) by using special tool (Forceps).

   Special Tool
   (A): 09916-14510
   (B): 09916-14910
   (C): 09916-84511

3) Release special tools and remove spring retainer and valve spring.
4) Remove valve from combustion chamber side.

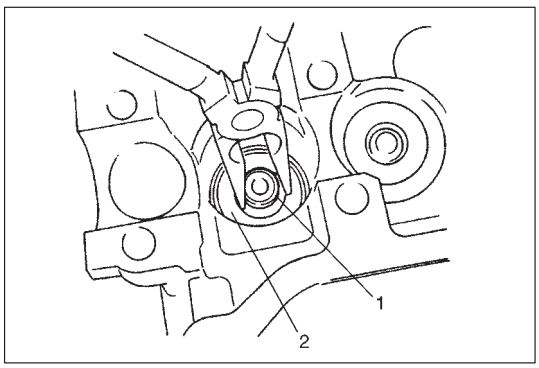

5) Remove valve stem seal (1) from valve guide and then valve spring seat (2).

   NOTE:
   Do not reuse seal once disassembled. Be sure to use new seal when assembling.

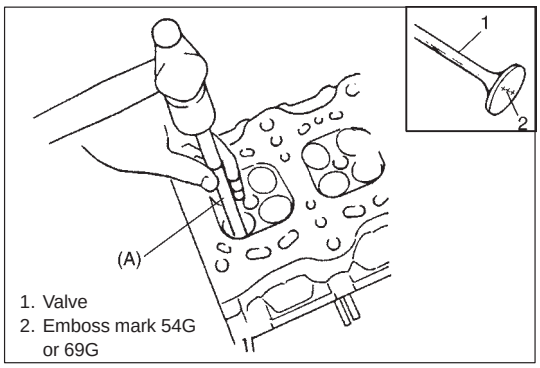

6) Using special tool (valve guide remover), drive valve guide out from combustion chamber side to valve spring side.

   Special Tool
   (A): 09916-46020 for engine equipped with 69G type valve
   (A): 09916-44910 for engine equipped with 54G type valve

   NOTE:
   Do not reuse valve guide once disassembled. Be sure to use new valve guide (Oversize) when assembling.

7) Place disassembled parts except valve stem seal and valve guide in order so that they can be installed in their original position.

[A]

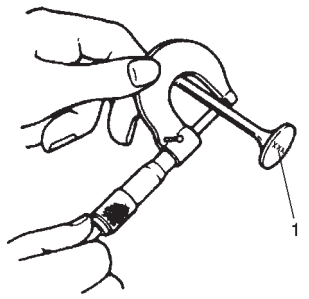

[B]

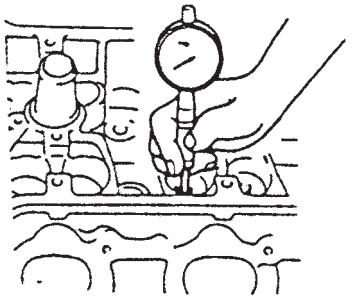

1. Emboss mark 54G or 69G

INSPECTION

Valve Guides

Using a micrometer and bore gauge, take diameter readings on valve stems and guides to check stem-to-guide clearance. Be sure to take reading at more than one place along the length of each stem and guide.

If clearance exceeds limit, replace valve and valve guide.

Valve stem-to-guide clearance

Valve type		Standard	Limit
69G	In	0.020 – 0.047 mm (0.0008 – 0.0019 in.)	0.07 mm (0.0028 in.)
	Ex	0.045 – 0.072 mm (0.0018 – 0.0028 in.)	0.09 mm (0.0035 in.)
54G	In	0.020 – 0.030 mm (0.0008 – 0.0012 in.)	0.05 mm (0.0017 in.)
	Ex	0.045 – 0.055 mm (0.0018 – 0.0022 in.)	0.07 mm (0.0028 in.)

Valve stem diameter [A]

Valve type		Standard
69G	In	5.965 – 5.980 mm (0.2348 – 0.2354 in.)
	Ex	5.940 – 5.955 mm (0.2339 – 0.2344 in.)
54G	In	5.465 – 5.480 mm (0.2152 – 0.2157 in.)
	Ex	5.440 – 5.455 mm (0.2142 – 0.2148 in.)

Valve guide bore [B] standard

In and Ex: 6.000 – 6.012 mm (0.2362 – 0.2367 in.) for 69G type valve

In and Ex: 5.485 – 5.510 mm (0.2159 – 0.2169 in.) for 54G type valve

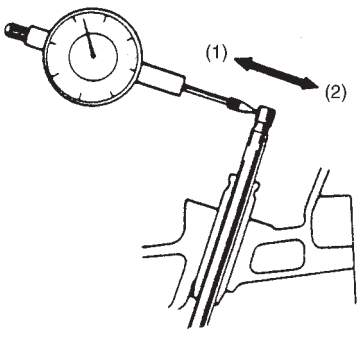

If bore gauge is not available, check end deflection of valve stem with a dial gauge instead.

Move stem end in directions (1) and (2) to measure end deflection.

If deflection exceeds its limit, replace valve stem and valve guide.

Valve stem end deflection limit	In	0.14 mm (0.005 in.)
	Ex	0.18 mm (0.007 in.)

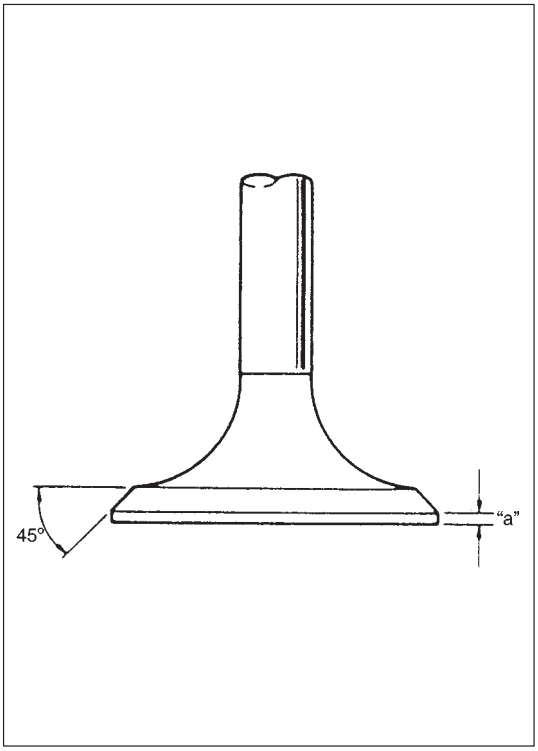

Valves

- Remove all carbon from valves.
- Inspect each valve for wear, burn or distortion at its face and stem end, as necessary, replace it.
- Measure thickness "a" of valve head. If measured thickness exceeds limit, replace valve.

Valve head thickness "a"		
	Standard	Limit
In and Ex	1.22 – 1.55 mm (0.048 – 0.061 in.)	0.9 mm (0.035 in.)

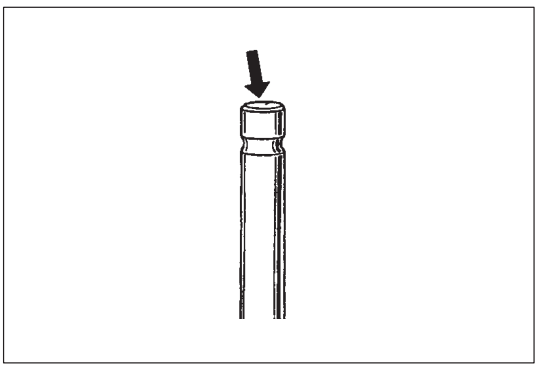

- Inspect valve stem end face for pitting and wear. If pitting or wear is found there, valve stem end may be resurfaced, but not too much to grind off its chamber. When it is worn out too much that its chamber is gone, replace valve.

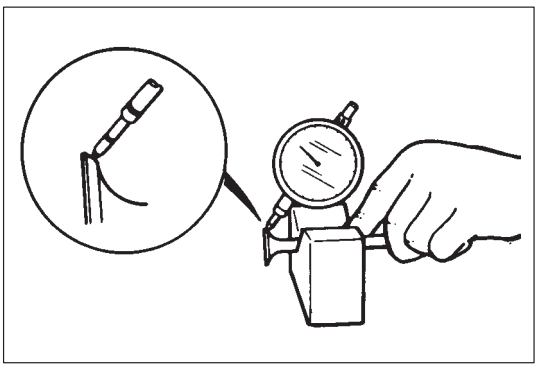

- Check each valve for radial runout with a dial gauge and "V" block. To check runout, rotate valve slowly. If runout exceeds its limit, replace valve.

  Limit on valve head radial runout:
  0.08 mm (0.003 in.)

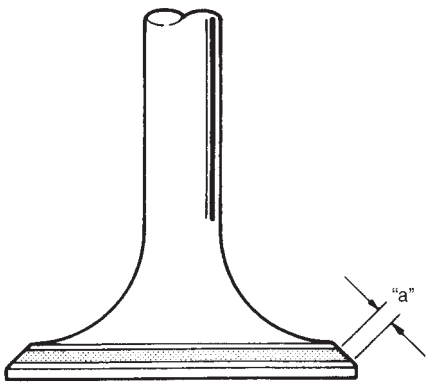

- Seating contact width:
  Create contact pattern on each valve in the usual manner, i.e. by giving uniform coat of marking compound to valve seat and by rotatingly tapping seat with valve head. Valve lapper (tool used in valve lapping) must be used.
  Pattern produced on seating face of valve must be a continuous ring without any break, and the width of pattern must be within specified range.

Standard seating width "a" revealed by contact pattern on valve face	In	1.1 – 1.3 mm (0.0433 – 0.0512 in.)
	Ex	

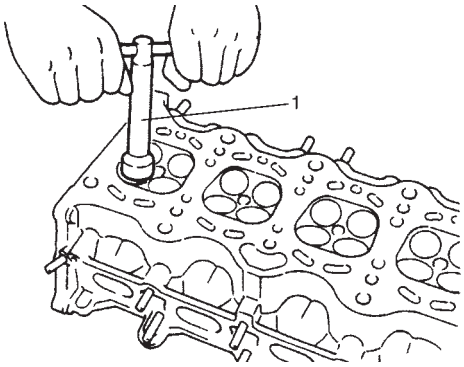

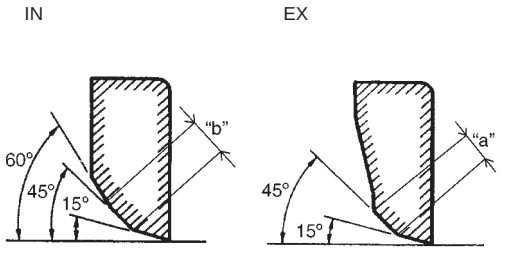

- Valve seat repair:
  A valve seat not producing a uniform contact with its valve or showing width of seating contact that is out of specified range must be repaired by regrinding or by cutting and regrinding and finished by lapping.
  1) EXHAUST VALVE SEAT: Use valve seat cutters (1) to make two cuts as illustrated in figure. Two cutters must be used: the first for making 15° angle, and the second for making 45° angle. The second cut must be made to produce desired seat width.

     Seat width for exhaust valve seat:
     "a": 1.1 – 1.3 mm (0.0433 – 0.0512 in.)

  2) INTAKE VALVE SEAT: Use valve seat cutters to make three cuts as illustrated in figure. Three cutters must be used: the 1st for making 15° angle, the 2nd for making 60° angle, and 3rd for making 45° angle. The 3rd cut (45°) must be made to produce desired seat width.

     Seat width for intake valve seat:
     "b": 1.1 – 1.3 mm (0.0433 – 0.0512 in.)

  3) VALVE LAPPING: Lap valve on seat in two steps, first with coarse size lapping compound applied to face and the second with fine-size compound, each time using valve lapper according to usual lapping method.

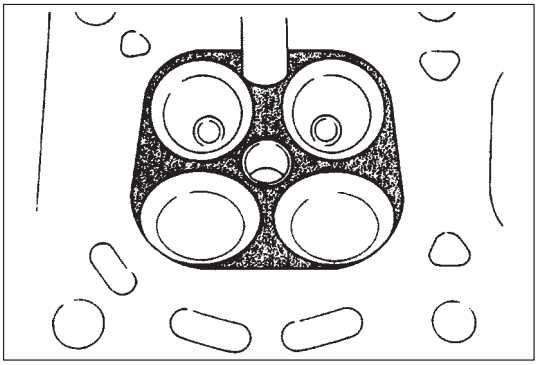

Cylinder Head

- Remove all carbon deposits from combustion chambers.

  NOTE:
  Do not use any sharp-edged tool to scrape off carbon deposits. Be careful not to scuff or nick metal surfaces when decarboning. The same applies to valves and valve seats, too.

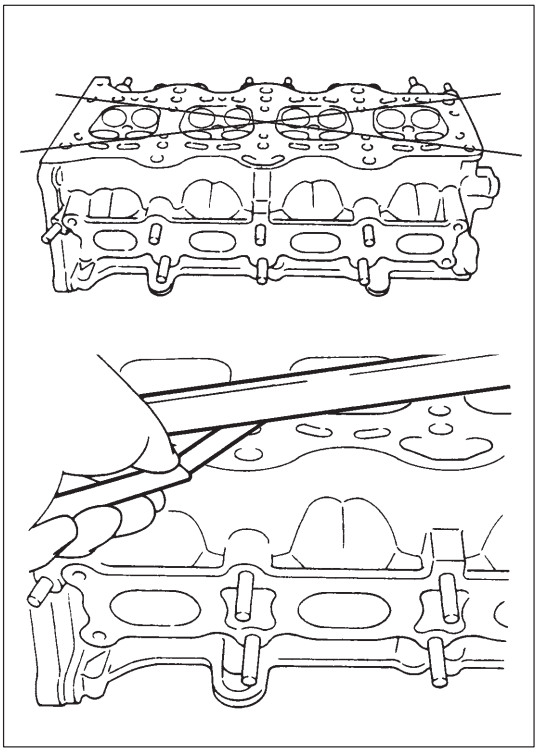

- Check cylinder head for cracks on intake and exhaust ports, combustion chambers, and head surface.
  Using a straightedge and thickness gauge, check flatness of gasketed surface at a total of 2 locations. If distortion limit, given below, is exceeded, correct gasketed surface with a surface plate and abrasive paper of about #400 (Waterproof silicon carbide abrasive paper): place abrasive paper on and over surface plate, and rub gasketed surface against paper to grind off high spots. Should this fail to reduce thickness gauge readings to within limit, replace cylinder head.
  Leakage of combustion gases from this gasketed joint is often due to warped gasketed surface: such leakage results in reduced power output.

  Limit of distortion: 0.03 mm (0.001 in.)

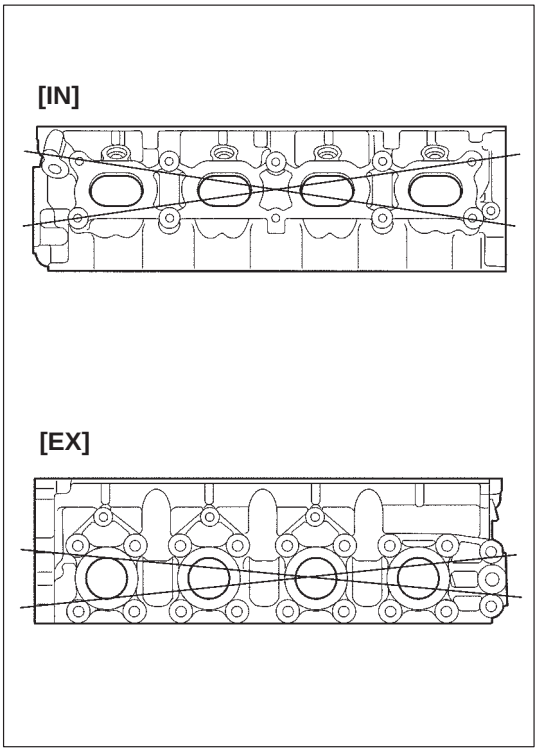

- Distortion of manifold seating faces:
  Check seating faces of cylinder head for manifolds, using a straightedge and thickness gauge, in order to determine whether these faces should be corrected or cylinder head replaced.

  Limit of distortion: 0.05 mm (0.002 in.)

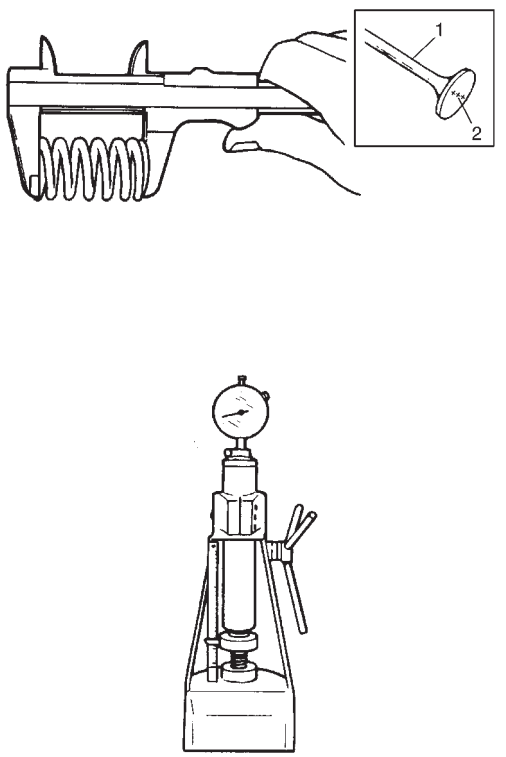

1. Valve
2. Emboss mark 54G or 69G

Valve Springs

- Referring to data given below, check to be sure that each spring is in sound condition, free of any evidence of breakage or weakening. Remember, weakened valve springs can cause chatter, not to mention possibility of reducing power output due to gas leakage caused by decreased seating pressure.

Item	Valve type	Standard	Limit
Valve spring free length	69G	43.00 mm (1.693 in.)	42.00 mm (1.652 in.)
	54G	36.83 mm (1.450 in.)	35.83 mm (1.410 in.)
Valve spring preload	69G	110 – 126N (11.2 – 12.8 kg) for 39.50 mm (24.7 – 28.2 lb /1.555 in.)	105 N (10.7 kg) for 39.5 mm (23.6 lb/1.555 in.)
	54G	107 – 125N (10.7 – 12.5 kg) for 31.50 mm (23.6 – 27.6 lb /1.240 in.)	102 N (10.4 kg) for 31.50 mm (22.9 lb/1.240 in.)

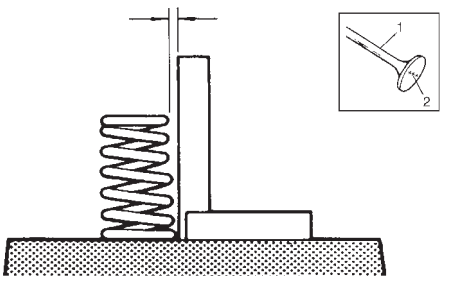

1. Valve
2. Emboss mark 54G or 69G

- Spring skewness:
  Use a square and surface plate to check each spring for skewness in terms of clearance between end of valve spring and square. Valve springs found to exhibit a larger clearance than limit given below must be replaced.

  Valve spring skewness limit:
  2.0 mm (0.079 in.) for engine equipped with 69G type valve
  1.6 mm (0.063 in.) for engine equipped with 54G type valve

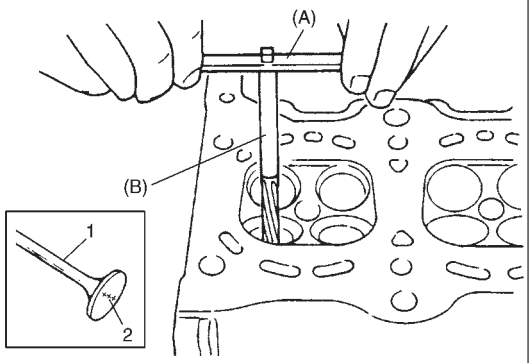

1. Valve
2. Emboss mark 54G or 69G

ASSEMBLY

1) Before installing valve guide into cylinder head, ream guide hole with special tool (11 mm reamer for engine equipped with 69G type valve or 10.5 mm reamer for engine equipped with 54G type valve) so as to remove burrs and make it truly round.

Special Tool
(A): 09916-34542
(B): 09916-38210 (11 mm) for engine equipped with 69G type valve
(B): 09916-37320 (10.5 mm) for engine equipped with 54G type valve

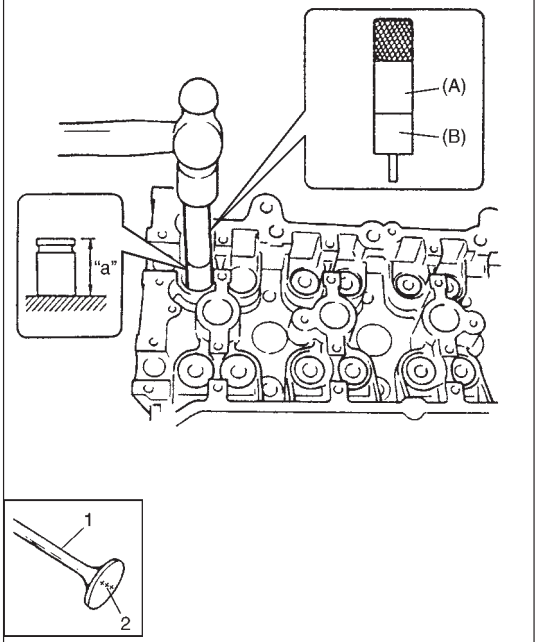

"a": Valve guide protrusion

1. Valve
2. Emboss mark 54G or 69G

2) Install valve guide to cylinder head.
Heat cylinder head uniformly to a temperature of 80 to 100 °C (176 to 212 °F) so that head will not be distorted, and drive new valve guide into hole with special tools. Drive in new valve guide until special tool (Valve guide installer) contacts cylinder head. After installing, make sure that valve guide protrudes by specified dimension "a" from cylinder head.

Special Tool
(A): 09916-57350 (For engine equipped with 69G type valve)
(A): 09916-58210 (For engine equipped with 54G type valve)
(B): 09917-88240 (For Intake side of engine equipped with 69G type valve)
(B): 09917-88250 (For Exhaust side of engine equipped with 69G type valve)
(B): 09916-56011 (For both sides of engine equipped with 54G type valve)

NOTE:
- **Never reuse once-disassembled valve guide. Make sure to install new valve guide.**
- **Intake and exhaust valve guides are identical.**

Valve guide protrusion "a"
(Intake side of engine equipped with 69G type valve): 17.5 mm (0.71 in.)
(Exhaust side of engine equipped with 69G type valve): 14.5 mm (0.57 in.)
(Both sides of engine equipped with 54G type valve): 11.1 – 11.5 mm (0.44 – 0.45 in.)

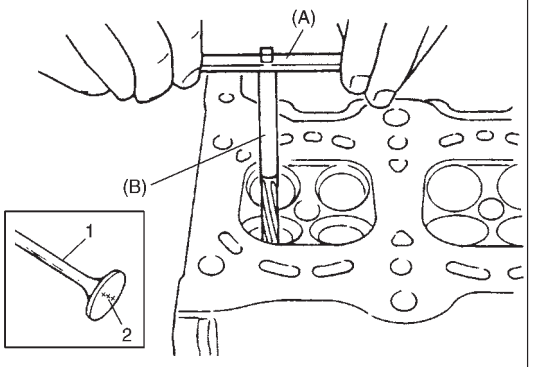

1. Valve
2. Emboss mark 54G or 69G

3) Ream valve guide bore with special tool (6.0 mm reamer for engine equipped with 69G type valve or 5.5 mm reamer for engine equipped with 54G type valve). After reaming, clean bore.

Special Tool
(A): 09916-34542
(B): 09916-37810 (6 mm) for engine equipped with 69G type valve
(B): 09916-34550 (5.5 mm) for engine equipped with 54G type valve

4) Install valve spring seat to cylinder head.

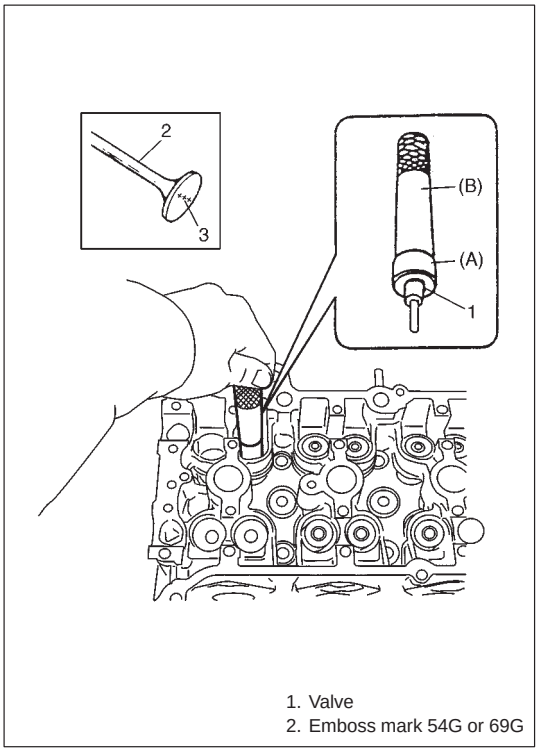

1. Valve
2. Emboss mark 54G or 69G

5) Install new valve stem seal (1) to valve guide.
After applying engine oil to seal and spindle of special tool (Valve guide installer handle), fit oil seal to spindle, and then install seal to valve guide by pushing special tool by hand.
After installing, check to be sure that seal is properly fixed to valve guide.

Special Tool
(A): 09917-98221
(B): 09916-57350 (For engine equipped with 69G type valve)
(B): 09916-58210 (For engine equipped with 54G type valve)

NOTE:
- **Do not reuse once-disassembled seal. Be sure to install new seal.**
- **When installing, never tap or hit special tool with a hammer or else. Install seal to guide only by pushing special tool by hand. Tapping or hitting special tool may cause damage to seal.**

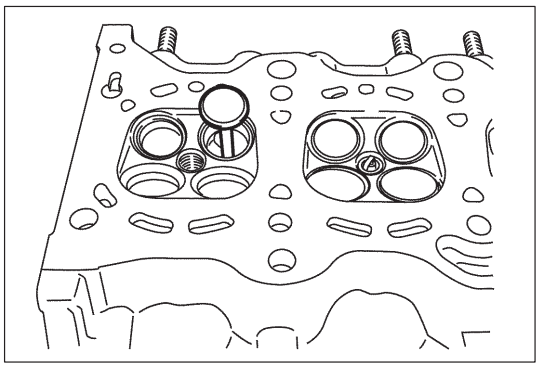

6) Install valve to valve guide.
Before installing valve to valve guide, apply engine oil to stem seal, valve guide bore and valve stem.

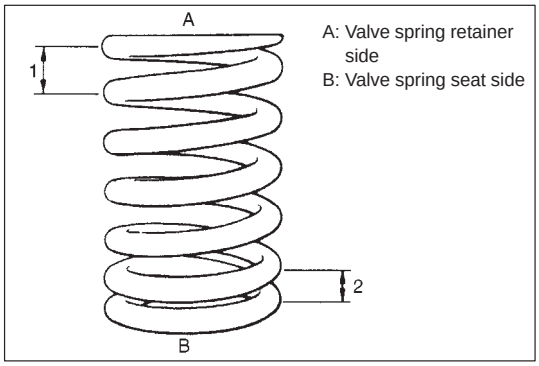

7) Install valve spring and spring retainer.
Each valve spring has top end (large-pitch end (1)) and bottom end (small-pitch end (2)). Be sure to position spring in place with its bottom end (small-pitch end) facing the bottom (valve spring seat side).

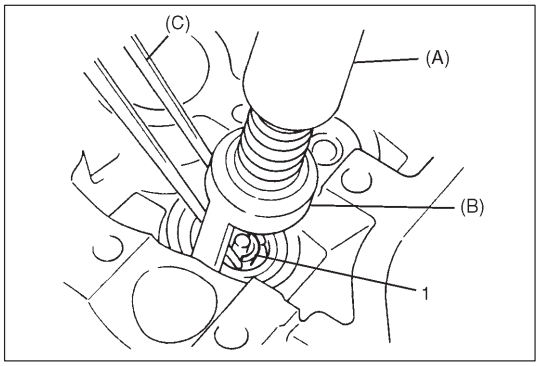

8) Using special tools (Valve lifter), compress valve spring and fit two valve cotters (1) into groove in valve stem.

Special Tool
(A): 09916-14510
(B): 09916-14910
(C): 09916-84511

NOTE:
When compressing the valve spring, be carefully to free from damage in inside face of tappet installing hole.

9) Install intake manifold, injectors and exhaust manifold to cylinder head.

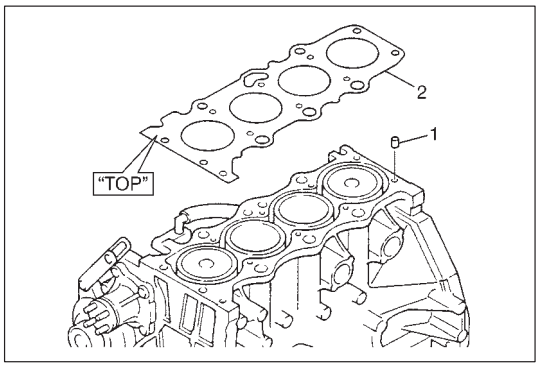

INSTALLATION

1) Clean mating surface of cylinder head and cylinder block.
Remove oil, old gasket and dust from mating surface.
2) Install knock pins (1) to cylinder block.
3) Install new cylinder head gasket (2) to cylinder block.
"TOP" mark provided on gasket comes to crankshaft pulley side, facing up (toward cylinder head side).

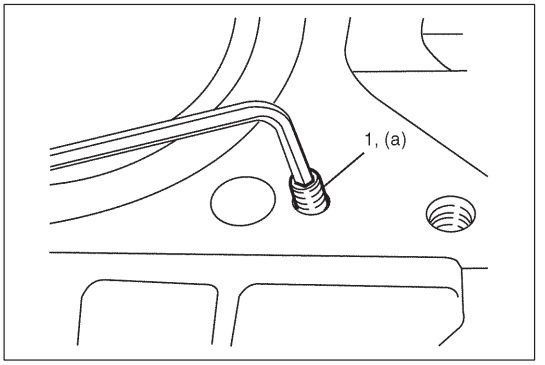

4) Make sure that oil jet (venturi plug) (1) is installed and if it is, that it is not clogged.
   When installing it, be sure to tighten to specified torque.

   Tightening Torque
   (a): 5 N·m (0.5 kg-m, 3.5 lb-ft)

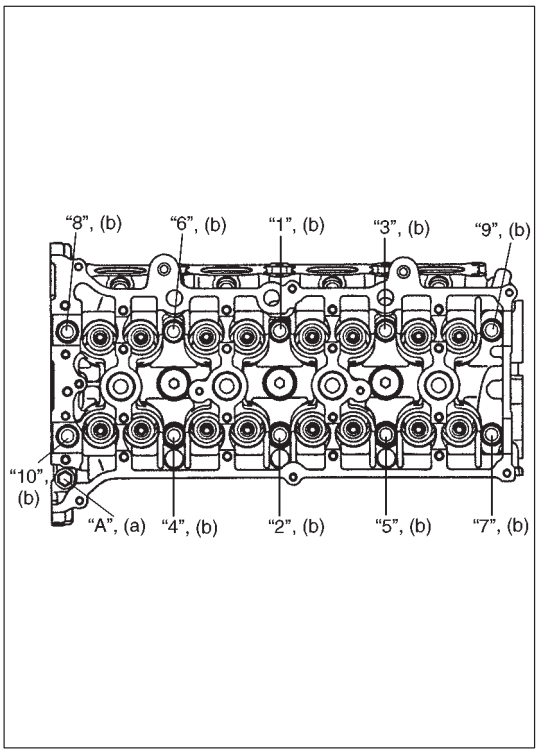

5) Install cylinder head to cylinder block.
   Apply engine oil to new cylinder head bolts and tighten them gradually as follows.
   a) Tighten cylinder head bolts ("1" – "10") to 20 N·m (2.0 kg-m, 14.5 lb-ft) according to numerical order as shown by using a 12 corner socket wrenches.
   b) In the same manner as in Step a), tighten them to 40 N·m (4.0 kg-m, 29.0 lb-ft).
   c) Retighten all bolts 60° according to numerical order in figure.
   d) Repeat Step c).
   e) Tighten bolt "A" to specified torque.

   NOTE:
   - **Never reuse cylinder head bolts ("1" – "10") once disassembled it due to plastic deformation tightening. Be sure to use new cylinder head bolts.**
   - **Be sure to tighten M8 bolt ("A") after securing the other bolt.**

   Tightening Torque
   (a): 22 N·m (2.2 kg-m, 16.0 lb-ft)
   (b): 40 N·m (4.0 kg-m, 29.0 lb-ft) and retighten 60° twice

6) Install exhaust manifold stiffener and exhaust pipe referring to "EXHAUST MANIFOLD" in this section.
7) Install camshafts, timing chain and chain cover as previously outlined.
8) Install cylinder head cover and oil pan as previously outlined.
9) Install intake manifold stiffener and connect each hoses and electric lead wires securely.
10) Install air cleaner outlet hoses.
11) Install radiator with cooling fan and connect A/T fluid hoses (vehicle with A/T), radiator inlet and outlet hoses referring to Section 6B.
12) Adjust generator belt tension referring to Section 6B.
13) Adjust A/C compressor and/or P/S pump belt tension (if equipped) referring to Section 1B or 3B1.
14) Adjust accelerator cable play referring to Section 6E.
15) Check to ensure that all removed parts are back in place. Reinstall any necessary parts which have not been reinstalled.
16) Refill cooling system with coolant, engine with engine oil and A/T with specified A/T fluid (vehicle with A/T).
17) Connect negative cable at battery.
18) Verify that there is no fuel leakage, coolant leakage, oil leakage, A/T fluid leakage (vehicle with A/T) and exhaust gas leakage at each connection.

PISTONS, PISTON RINGS, CONNECTING RODS AND CYLINDERS

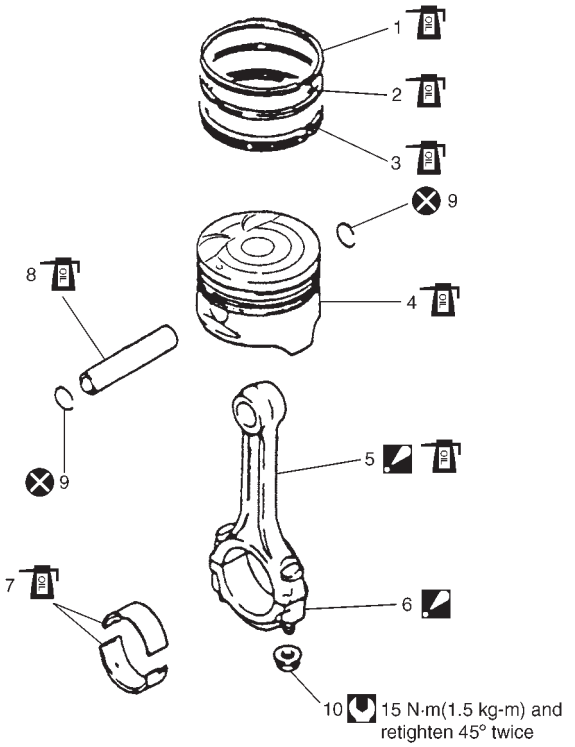

1. Top ring
2. 2nd ring
3. Oil ring
4. Piston
5. Connecting rod:
   Apply engine oil to sliding surface except inner surface of big end, and rod bolts.
   Make sure rod bolt diameter when reuse it due to plastic deformation tightening.
   Refer to inspection of connecting rod in this section.
6. Connecting rod bearing cap:
   Point arrow mark on cap to crankshaft pulley side.
7. Connecting rod bearing
8. Piston pin
9. Piston pin circlip
10. Bearing cap nut

: Tightening Torque
: Apply engine oil to sliding surface of each parts.
: Do not reuse

REMOVAL

1) Relieve fuel pressure according to procedure described in Section 6.
2) Disconnect negative cable at battery.
3) Drain engine oil.
4) Drain coolant.
5) Remove cylinder head referring to “VALVES AND CYLINDER HEAD” in this section.
6) Mark cylinder number on all pistons, connecting rods and connecting rod caps using silver pencil or quick drying paint.

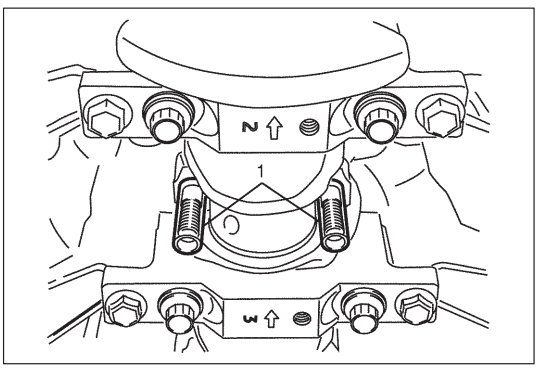

7) Remove rod bearing caps.
8) Install guide hose (1) over threads of rod bolts.
   This prevents damage to bearing journal and rod bolt threads when removing connecting rod.
9) Decarbon top of cylinder bore before removing piston from cylinder.
10) Push piston and connecting rod assembly out through the top of cylinder bore.

DISASSEMBLY

1) Using piston ring expander, remove two compression rings (Top and 2nd) and oil ring from piston.

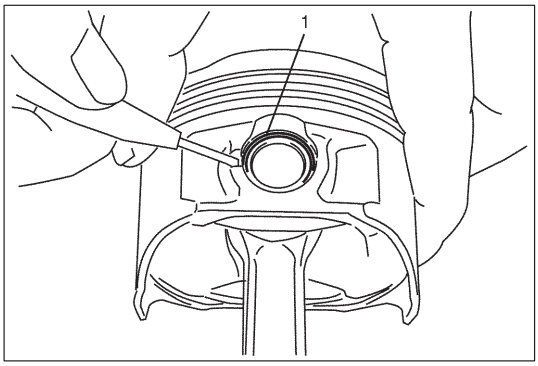

2) Remove piston pin from connecting rod.
   - Ease out piston pin circlips (1), as shown.

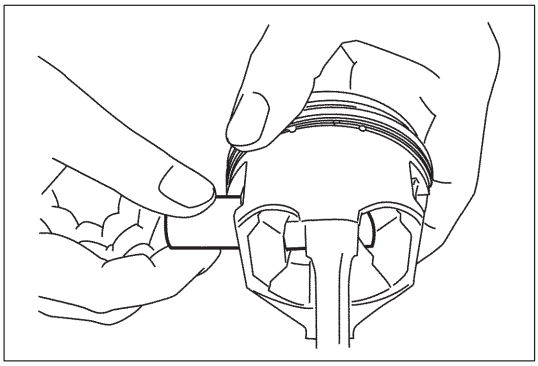

   - Force piston pin out.

CLEANING

Decarbon piston head and ring grooves, using a suitable tool.

INSPECTION

Cylinder

- Inspect cylinder walls for scratches, roughness or ridges which indicate excessive wear. If cylinder bore is very rough or deeply scratched or ridged, rebore cylinder and use oversize piston.

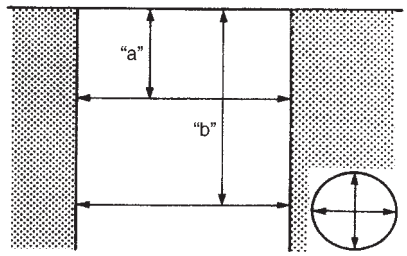

"a": 50 mm (1.96 in.)
"b": 95 mm (3.74 in.)

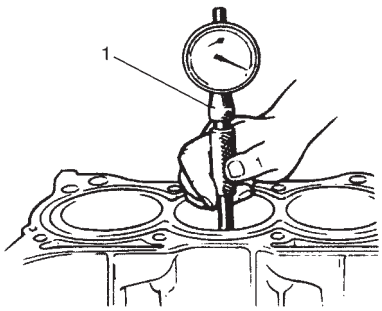

- Using a cylinder gauge (1), measure cylinder bore in thrust and axial directions at two positions ("a" and "b") as shown in figure. If any of the following conditions is noted, rebore cylinder.
  1) Cylinder bore dia. exceeds limit.
  2) Difference of measurements at two positions exceeds taper limit.
  3) Difference between thrust and axial measurements exceeds out-of-round limit.

  Cylinder bore dia. limit : 78.15 mm (3.077 in.)
  Taper and out-of-round limit : 0.10 mm (0.004in.)

  NOTE:
  If any one of four cylinders has to be rebored, rebore all four to the same next oversize. This is necessary for the sake of uniformity and balance.

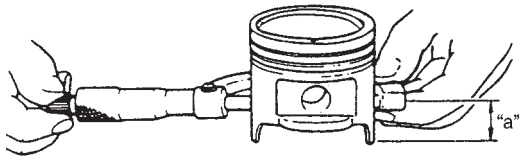

"a": 19.5 mm (0.77 in.)

Pistons

- Inspect piston for faults, cracks or other damaged. Damaged or faulty piston should be replaced.
- Piston diameter:
  As indicated in figure, piston diameter should be measured at a position 19.5 mm (0.77 in.) from piston skirt end in the direction perpendicular to piston pin.

Piston diameter	Standard	77.953 – 77.968 mm (3.0690 – 3.0696 in.)
	Oversize: 0.25 mm (0.0098 in.)	78.203 – 78.218 mm (3.0789 – 3.0794 in.)
	0.50 mm (0.0196 in.)	78.453 – 78.468 mm (3.0887 – 3.0893 in.)

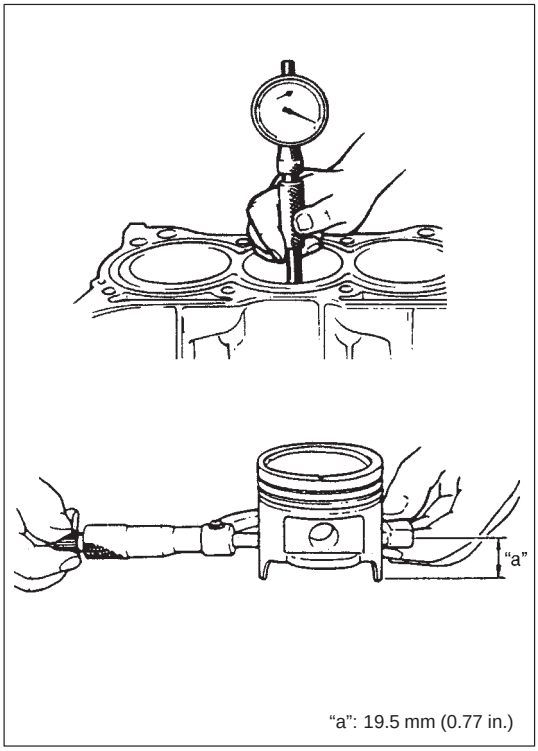

"a": 19.5 mm (0.77 in.)

- Piston clearance:
  Measure cylinder bore diameter and piston diameter to find their difference which is piston clearance. Piston clearance should be within specification as given below. If it is out of specification, re-bore cylinder and use oversize piston.

  Piston clearance: 0.032 – 0.061 mm (0.0013 – 0.0024 in.)

  NOTE:
  - **Cylinder bore diameters used here are measured in thrust direction at two positions.**

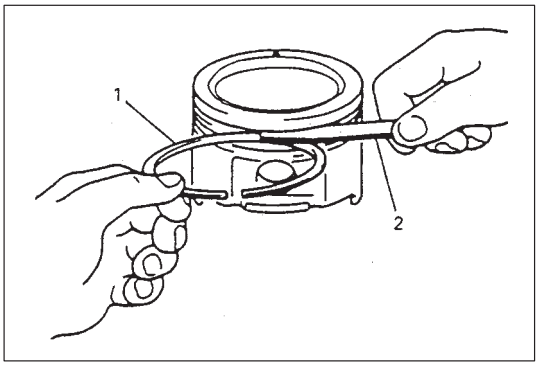

- Ring groove clearance:
  Before checking, piston grooves must be clean, dry and free of carbon deposits.
  Fit new piston ring (1) into piston groove, and measure clearance between ring and ring land by using thickness gauge (2). If clearance is out of limit, replace piston.

  Ring groove clearance:
  Top ring: 0.03 – 0.07 mm (0.0012 – 0.0028 in.)
  Limit 0.12 mm (0.0047 in.)
  2nd ring: 0.02 – 0.06 mm (0.0008 – 0.0024 in.)
  Limit 0.10 mm (0.0039 in.)
  Oil ring: 0.03 – 0.17 mm (0.0012 – 0.0067 in.)

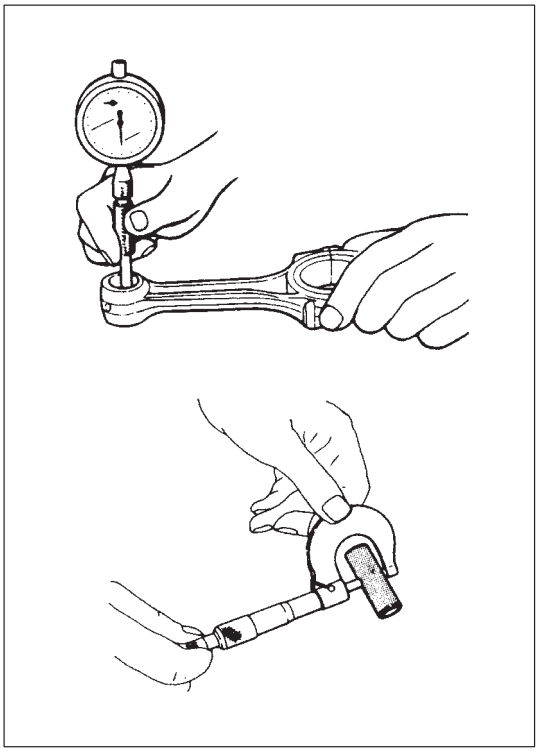

Piston Pin

- Check piston pin, connecting rod small end bore and piston bore for wear or damage, paying particular attention to condition of small end bore bush. If pin, connecting rod small end bore or piston bore is badly worn or damaged, replace pin, connecting rod and/or piston.
- Piston pin clearance:
  Check piston pin clearance in small end and piston. Replace connecting rod and/or piston if its small end is badly worn or damaged or if measured clearance exceeds limit.

Item	Standard
Piston pin clearance in connecting rod small end	0.003 – 0.014 mm (0.0001 – 0.0006 in.)
Piston pin clearance in piston	0.006 – 0.017 mm (0.00026 – 0.00067 in.)

Small-end bore:
20.003 – 20.011 mm (0.7875 – 0.7878 in.)

Piston pin dia.:
19.997 – 20.000 mm (0.7873 – 0.7874 in.)

Piston bore:
20.006 – 20.014 mm (0.7870 – 0.7874 in.)

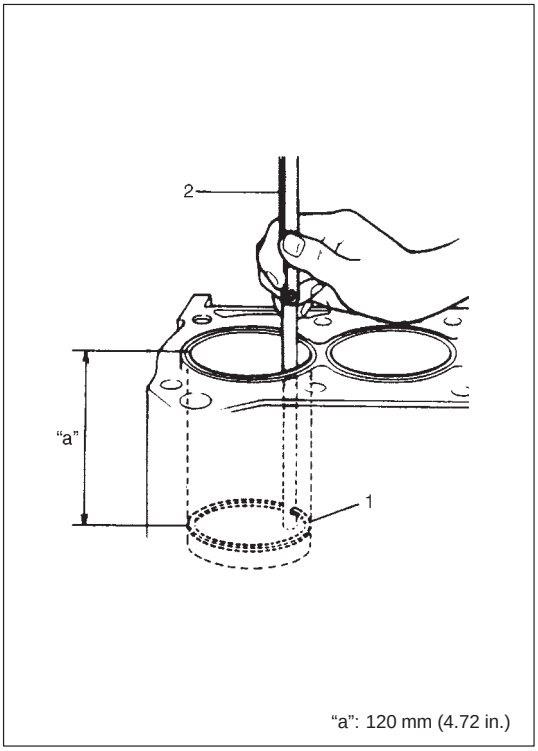

"a": 120 mm (4.72 in.)

Piston Rings

To measure end gap, insert piston ring (1) into cylinder bore and then measure the gap by using thickness gauge (2).
If measured gap is out of specification, replace ring.

NOTE:
Decarbon and clean top of cylinder bore before inserting piston ring.

Item		Standard	Limit
Piston ring end gap	Top ring	0.20 – 0.35 mm (0.0079 – 0.0138 in.)	0.7 mm (0.0276 in.)
	2nd ring	0.30 – 0.45 mm (0.0118 – 0.0177 in.)	1.0 mm (0.0039 in.)
	Oil ring	0.20 – 0.70 mm (0.0079 – 0.0276 in.)	1.5 mm (0.059 in.)

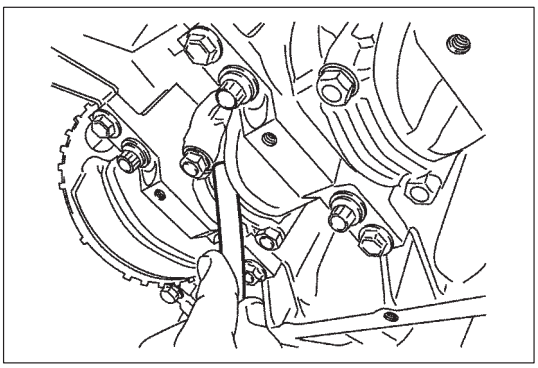

Connecting Rod

- Big-end side clearance:
  Check big-end of connecting rod for side clearance, with rod fitted and connected to its crank pin in the normal manner. If measured clearance is found to exceed its limit, replace connecting rod.

Item	Standard	Limit
Big-end side clearance	0.25 – 0.40 mm (0.0098 – 0.0157 in.)	0.35 mm (0.0138 in.)

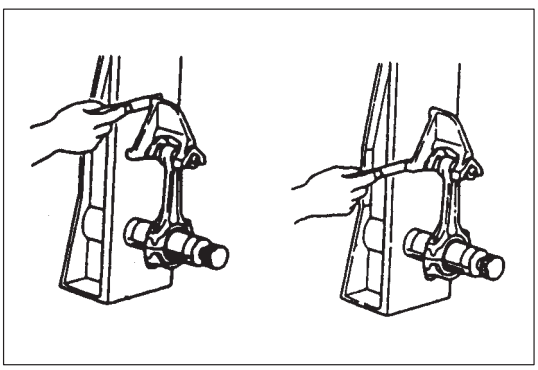

- Connecting rod alignment:
  Mount connecting rod on aligner to check it for bow and twist. If limit is exceeded, replace it.

  Limit on bow: 0.05 mm (0.0020 in.)
  Limit on twist: 0.10 mm (0.0039 in.)

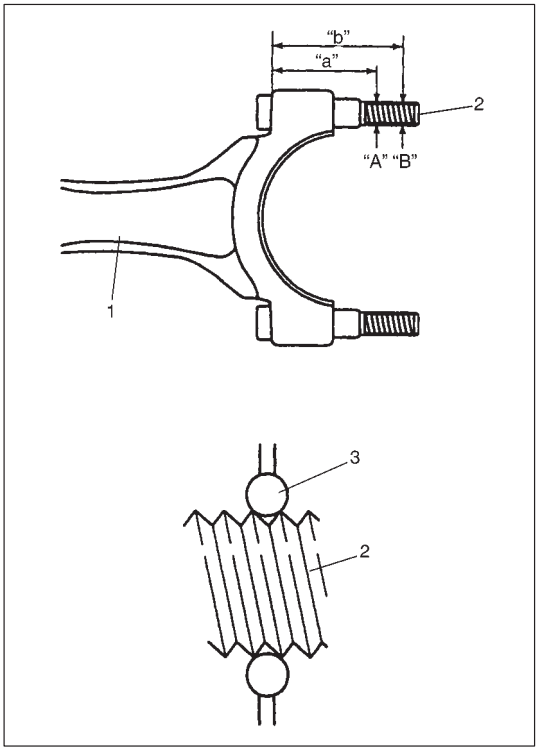

- **Connecting rod bolt diameter (Plastic deformation tightening bolt)**
  Measure connecting rod (1) bolt (2) for diameter "A" on 32 mm (1.25 in.) from bolt mounting surface and diameter "B" on 40 mm (1.57 in.) from bolt mounting surface by using a micrometer (3). Bolt diameter difference should be specification as given below. If it is out of specification, replace connecting rod.

  Bolt diameter difference limit ("A" – "B"): 0.1 mm (0.004 in.)

  Measurement distance "a": 32 mm (1.25 in.)
  Measurement distance "b": 40 mm (1.57 in.)

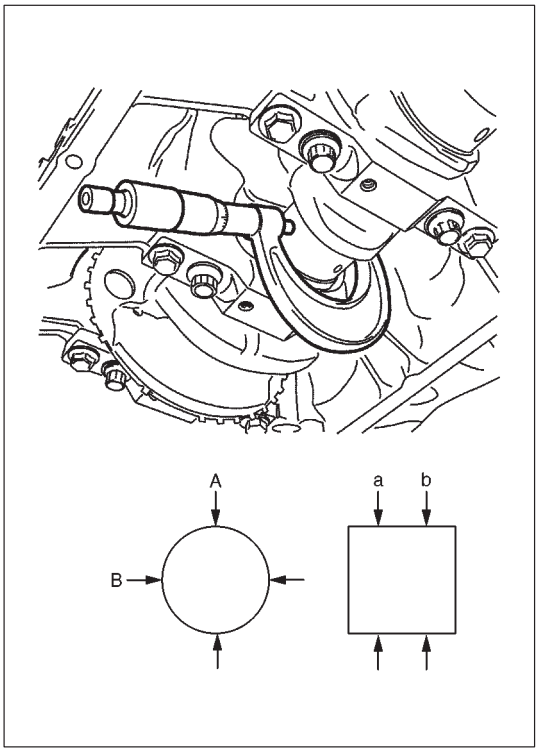

Crank Pin and Connecting Rod Bearings

- Inspect crank pin for uneven wear or damage. Measure crank pin for out-of-round or taper with a micrometer. If crank pin is damaged or out-of round or taper is out of limit, replace crankshaft or regrind crank pin to undersize and use undersize bearing.

Connecting rod bearing size	Crank pin diameter
Standard	41.982 – 42.000 mm (1.6528 – 1.6535 in.)
0.25 mm (0.0098 in.) undersize	41.732 – 41.750 mm (1.6430 – 1.6437 in.)

Out-of-round: A – B
Taper : a – b
Out-of-round and taper limit: 0.01 mm (0.0004 in.)

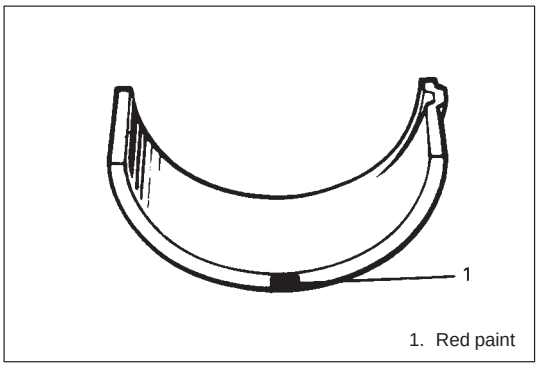

1. Red paint

- Rod bearing:
  Inspect bearing shells for signs of fusion, pitting, burn or flaking and observe contact pattern. Bearing shells found in defective condition must be replaced.
  Two kinds of rod bearing are available; standard size bearing and 0.25 mm (0.0098 in.) undersize bearing. For identification of undersize bearing, it is painted red at the position as indicated in figure, undersize bearing thickness is 1.605 – 1.615 mm (0.0632 – 0.0635 in.) at the center of it.

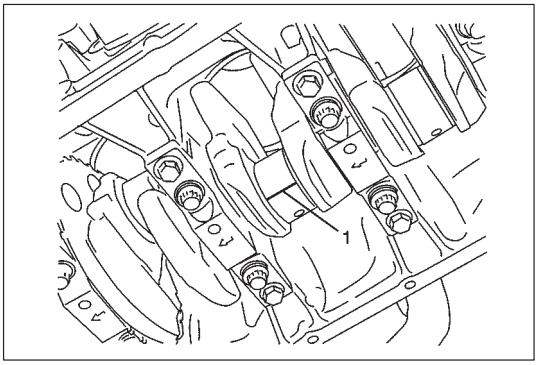

- Rod bearing clearance:
  1) Before checking bearing clearance, clean bearing and crank pin.
  2) Install bearing in connecting rod and bearing cap.
  3) Place a piece of gaging plastic (1) to full width of crank pin as contacted by bearing (parallel to crankshaft), avoiding oil hole.

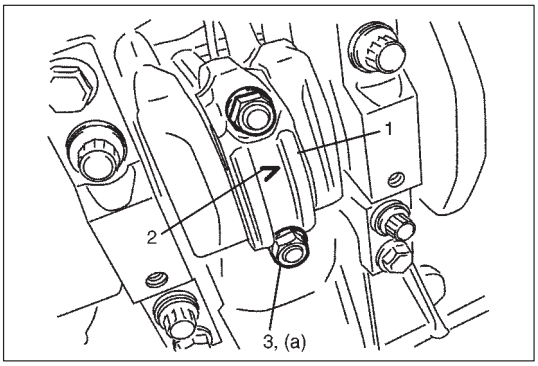

4) Install rod bearing cap (1) to connecting rod.
   When installing cap, be sure to point arrow mark (2) on cap to crankshaft pulley side, as shown in figure. After applying engine oil to rod bolts and tighten cap nuts (3) gradually as follows.
   Tighten all cap nuts to 15 N·m (1.5 kg-m, 11.0 lb-ft).

   Tightening Torque
   (a): 15 N·m (1.5 kg-m, 11.0 lb-ft)

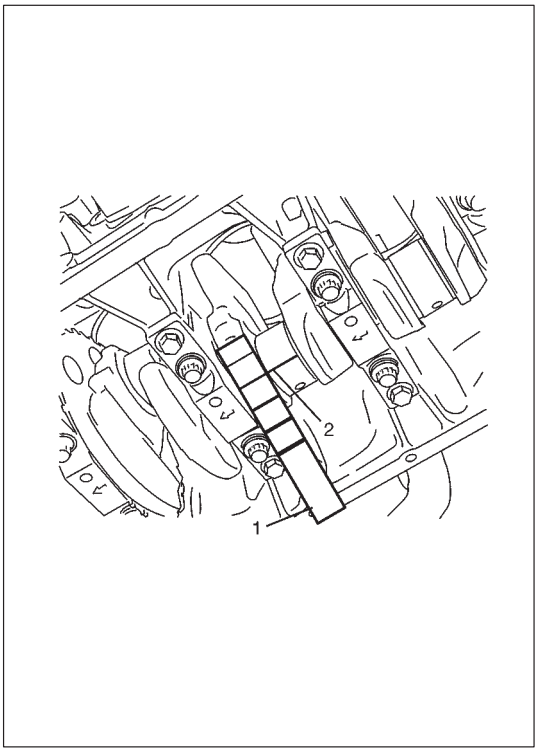

5) Remove cap and using a scale (1) on gaging plastic (2) envelope, measure gaging plastic width at the widest point (clearance).
   If clearance exceeds its limit, use a new standard size bearing and remeasure clearance.

Item	Standard	Limit
Bearing clearance	0.029 – 0.047 mm (0.0011 – 0.0019 in.)	0.065 mm (0.0026 in.)

6) If clearance can not be brought to within its limit even by using a new standard size bearing, regrind crankpin to undersize and use 0.25 mm undersize bearing.

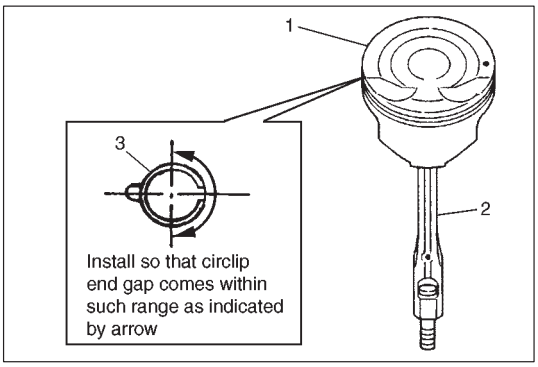

ASSEMBLY

1) Install piston pin to piston (1) and connecting rod (2):
   a) After applying engine oil to piston pin and piston pin holes in piston and connecting rod.
   b) Fit connecting rod as shown in figure.
   c) Insert piston pin to piston and connecting rod.
   d) Install piston pin circlips (3).

   NOTE:
   Circlip should be installed with its cut part facing as shown in figure.

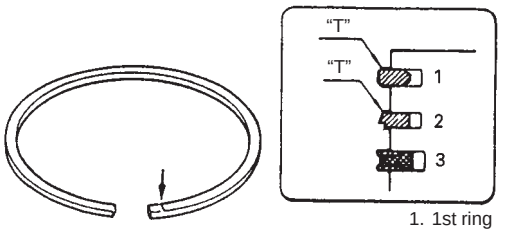

1. 1st ring
2. 2nd ring
3. Oil ring

2) Install piston rings to piston:
   a) As indicated in figure, 1st and 2nd rings have "T" mark respectively. When installing these piston rings to piston, direct marked side of each ring toward top of piston.
   b) 1st ring (1) differs from 2nd ring (2) in thickness, shape and color of surface contacting cylinder wall.
   Distinguish 1st ring from 2nd ring by referring to figure.
   c) When installing oil ring (3) install spacer first and then two rails.

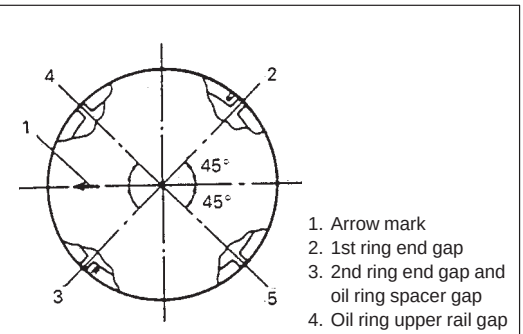

1. Arrow mark
2. 1st ring end gap
3. 2nd ring end gap and oil ring spacer gap
4. Oil ring upper rail gap
5. Oil ring lower rail gap

3) After installing three rings (1st, 2nd and oil rings), distribute their end gaps as shown in figure.

INSTALLATION

1) Apply engine oil to pistons, rings, cylinder walls, connecting rod bearings and crankpins.

NOTE:
Do not apply oil between connecting rod and bearing or between bearing cap and bearing.

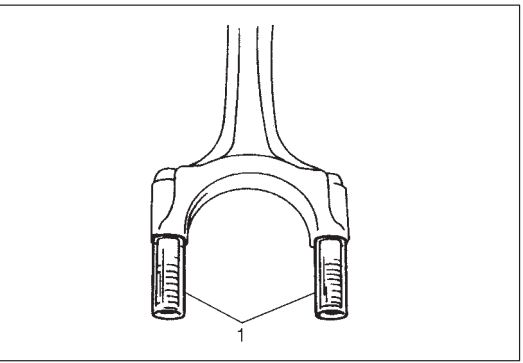

2) Install guide hoses (1) over connecting rod bolts.
These guide hoses protect crank pin and threads of rod bolt from damage during installation of connecting rod and piston assembly.

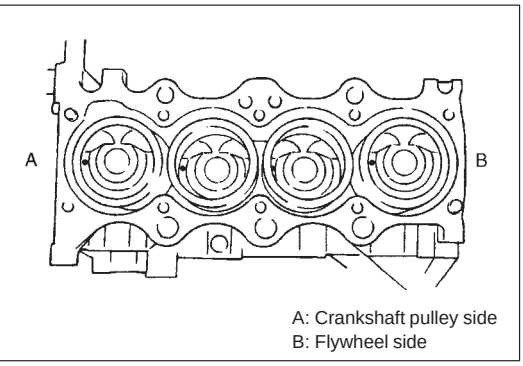

A: Crankshaft pulley side
B: Flywheel side

3) When installing piston and connecting rod assembly into cylinder bore, point front mark on piston head to crankshaft pulley side.

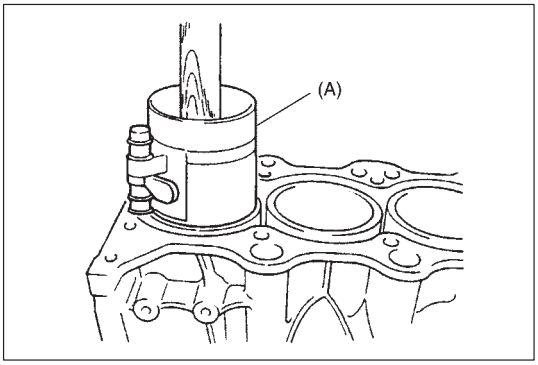

4) Install piston and connecting rod assembly into cylinder bore. Use special tool (Piston ring compressor) to compress rings. Guide connecting rod into place on crankshaft.
Using a hammer handle, tap piston head to install piston into bore. Hold ring compressor firmly against cylinder block until all piston rings have entered cylinder bore.

Special Tool
(A): 09916-77310

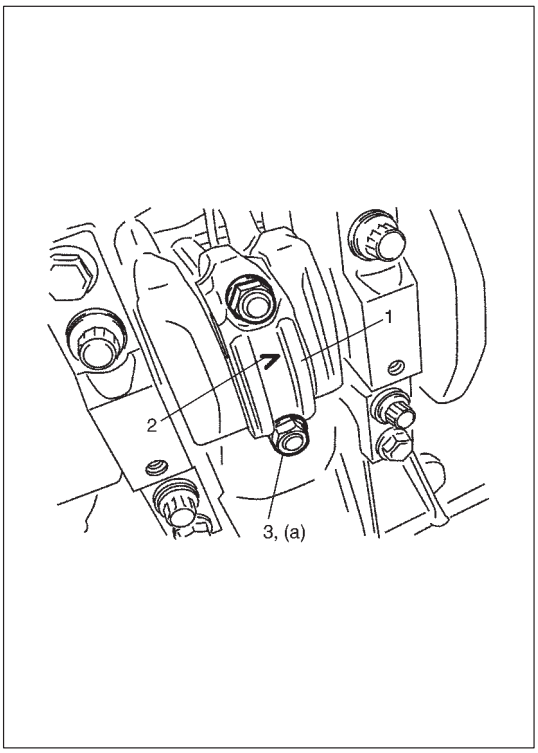

5) Install bearing cap (1):
Point arrow mark (2) on cap to crankshaft pulley side.
After applying oil to rod bolts and tighten cap nuts (3) gradually as follows.
a) Tighten all cap nuts to 15 N·m (1.5 kg-m, 11.0 lb-ft).
b) Retighten them 45°.
c) Repeat Step b).

Tightening Torque
(a): 15 N·m (1.5 kg-m, 11.0 lb-ft)
and retighten 45° twice.

NOTE:
Before installing bearing cap, make sure that checking for connecting rod bolt diameter.
Refer to inspection of connecting rod in this section.

6) Reverse removal procedure for installation as previously outlined.
7) Adjust generator belt tension referring to Section 6B.
8) Adjust A/C compressor and/or P/S pump belt tension (if equipped) referring to Section 1B or 3B1.
9) Adjust accelerator cable play referring to Section 6E.
10) Check to ensure that all removed parts are back in place. Reinstall any necessary parts which have not been reinstalled.
11) Refill cooling system with coolant engine with engine oil and A/T with specified A/T fluid (vehicle with A/T).
12) Connect negative cable at battery.
13) Verify that there is no fuel leakage, coolant leakage, oil leakage, A/T fluid leakage (vehicle with A/T) and exhaust gas leakage at each connection.

ENGINE MOUNTINGS

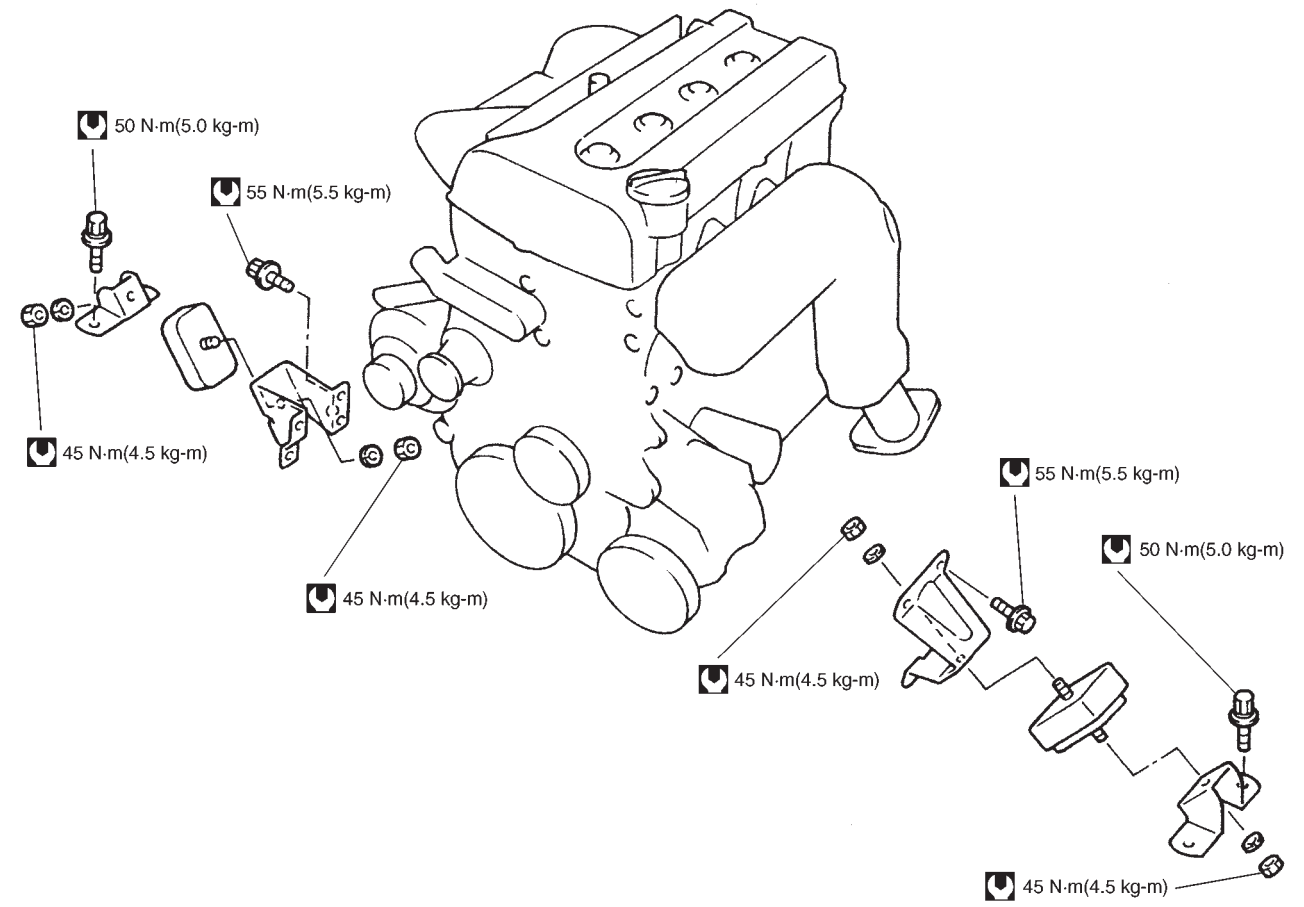

UNIT REPAIR OVERHAUL

ENGINE ASSEMBLY

REMOVAL

1) Relieve fuel pressure according to procedure described in Section 6.
2) Disconnect negative cable at battery.
3) Remove engine hood after disconnecting windshield washer hose.
4) Remove A/C compressor and/or P/S pump belt (if equipped).
5) Remove generator belt.
6) Drain engine oil.

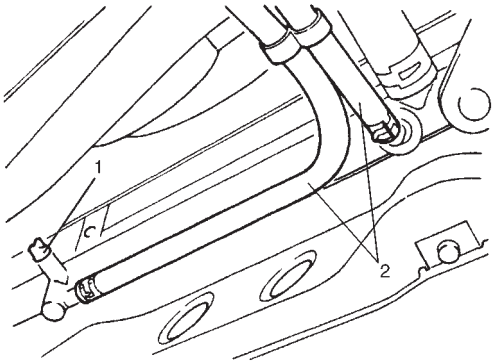

1. Drain plug

7) Drain coolant.

WARNING:
To help avoid danger of being burned, do not remove drain plug (1) and radiator cap while engine and radiator are still hot. Scalding fluid and steam can be blown out under pressure if plug and cap are taken off too soon.

8) Disconnect radiator inlet and outlet hoses from each pipe.
9) Disconnect A/T fluid hoses (2) (vehicle with A/T) and release its clamps. Place some container under radiator to receive A/T fluid which will flow out when hose is disconnected.

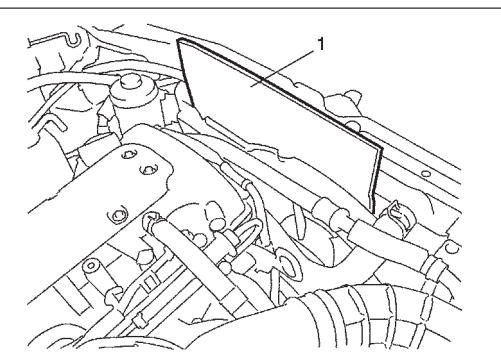

10) Remove fan shroud upper bolts and install board (1) or the like. This prevents damage to radiator fins when removing and installing radiator.
11) Remove radiator with cooling fan referring to Section 6B. Then remove water pump pulley.

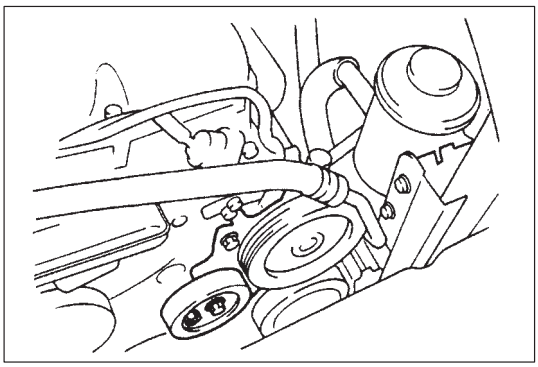

12) With hose connected, detach P/S pump from its bracket (if equipped) referring to Section 3B1.

NOTE:
Suspend removed P/S pump at a place where no damage will be caused during removal and installation of engine assembly.

13) If vehicle equipped with A/C compressor, work of right hand steering vehicle differs from its of left hand steering vehicle. Each work is as follows.

- For right hand steering vehicle:
  With hose connected, detach A/C compressor from its bracket.

  NOTE:
  Suspend removed A/C compressor at a place where no damage will be caused during removal and installation of engine assembly.

- For left hand steering vehicle:
  a) Recover refrigerant from refrigeration system using recovery and recycling equipment.
  b) Disconnect magnet clutch lead wire.
  c) Remove suction pipe and disconnect discharge pipe from A/C compressor.
  d) Remove A/C compressor from its bracket.

When servicing above steps referring to Section 1B.

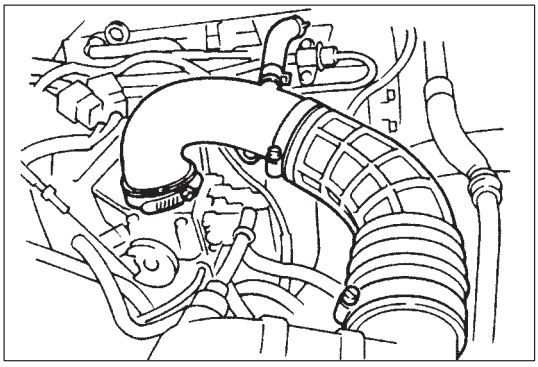

14) Remove air cleaner outlet No.1 and No.2 hoses.

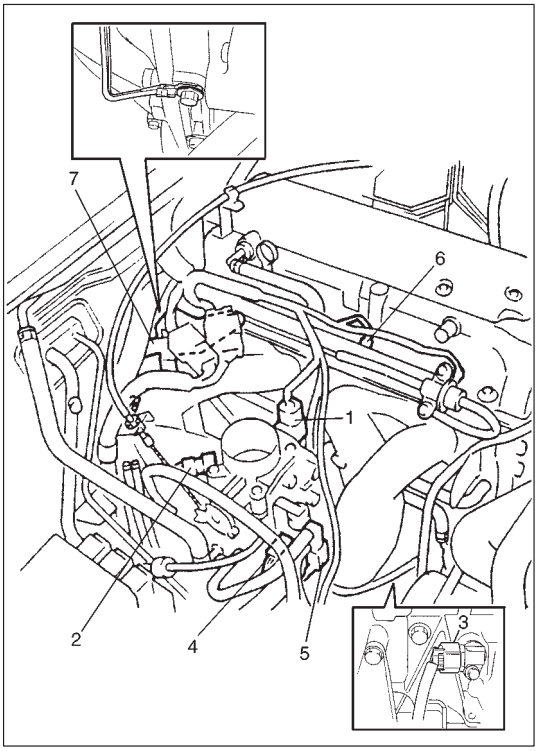

15) Disconnect the following electric lead wires:
- TP sensor (1)
- MAP sensor (2)
- CKP sensor (if equipped) (3)
- CMP sensor
- ECT sensor
- Heated oxygen sensor
- EGR valve (if equipped)
- IAC valve (4)
- EVAP canister purge valve (5)
- Injectors (6)
- Ignition coils
- Generator
- Starting motor
- Oil pressure switch
- Ground terminal from intake manifold and cylinder block
- Each wire harness clamps

16) Remove intake manifold bracket (7) with main harness from intake manifold.

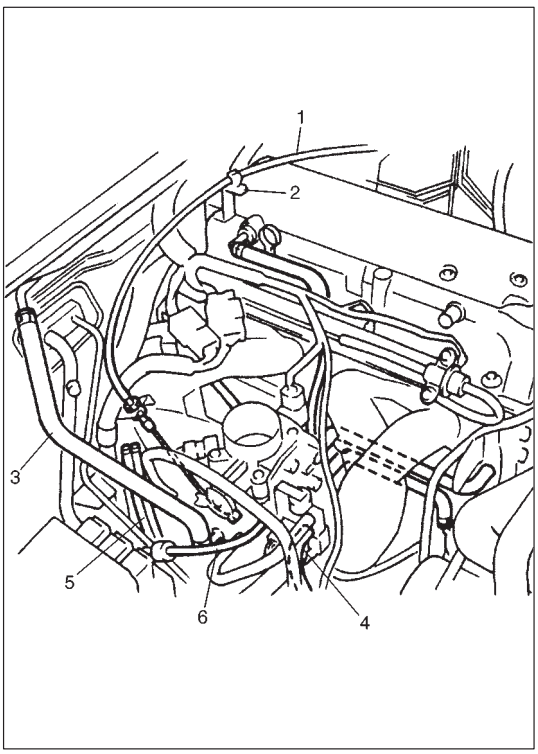

17) Remove starting motor referring to Section 6G.
18) Remove heated oxygen sensor bracket from cylinder head and detach No.1 heated oxygen sensor coupler from its bracket.
19) Release accelerator cable (1) from clamp (2) (for left hand steering vehicle only) and disconnect accelerator cable from throttle body.
20) Remove canister purge hose bracket from intake manifold.
21) Disconnect the following hoses:
- Brake booster hose (3) from intake manifold
- Canister purge hose (4) from EVAP canister purge valve
- Fuel feed and return hoses (5) from each pipe
- Heater inlet and outlet hoses from each pipe
- Vacuum hose (6) (to check valve)

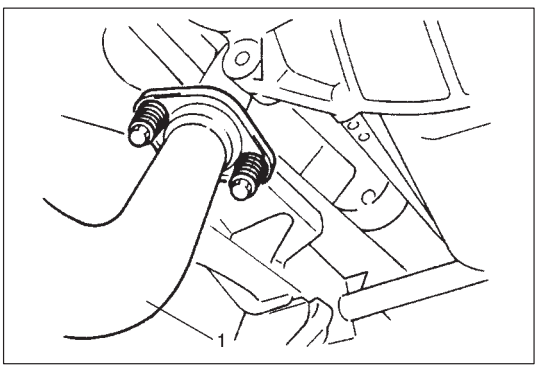

22) Disconnect exhaust pipe (1) from exhaust manifold.

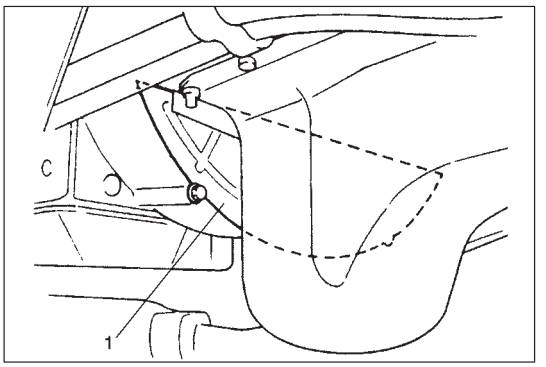

23) Remove clutch housing (torque converter housing for A/T) lower plate (1).

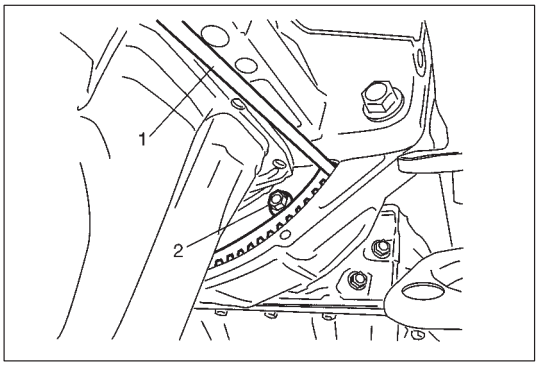

24) With drive plate locked by using a proper size rod (1) or the like, remove torque converter bolts (2) (vehicle with A/T).
25) Support transmission. For A/T vehicle, do not jack under A/T oil pan to support transmission.

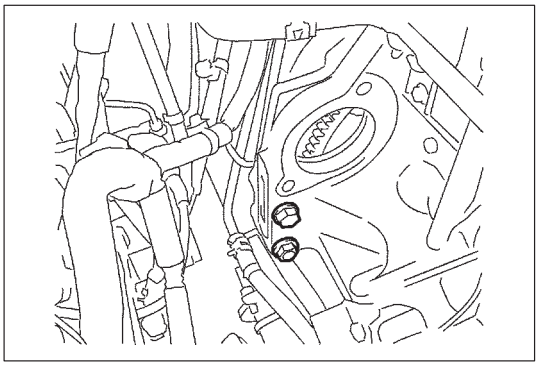

26) Remove bolts and nuts fastening cylinder block and transmission.

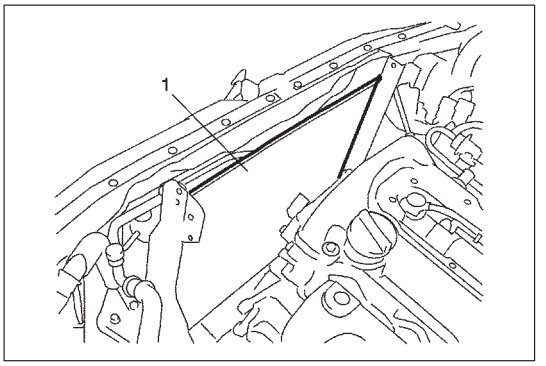

27) Install board (1) or the like on A/C condenser. This prevents damage to condenser fins when lifting and lowering engine assembly.

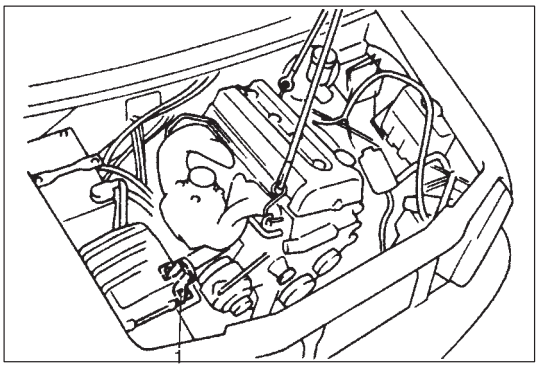

28) Install lifting device.
29) Remove right and left engine mounting bracket bolts (1).
30) Before lifting engine, check to ensure all hoses, electric wires and cables are disconnected from engine.
31) Remove engine assembly from chassis and transmission by lifting a little , sliding toward front side, and then carefully hoist engine assembly.

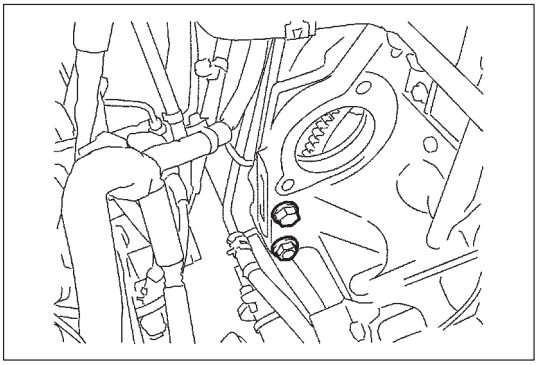

INSTALLATION

1) Lower engine assembly into engine compartment.
   Connect engine to transmission.
   Hard-tighten bolts and nuts fastening cylinder block and transmission.

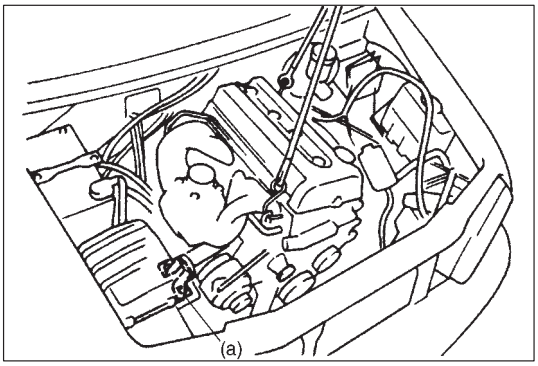

2) Tighten right and left engine mounting bracket bolts to specified torque.

   Tightening Torque
   (a): 50 N·m (5.0 kg-m, 36.5 lb-ft)

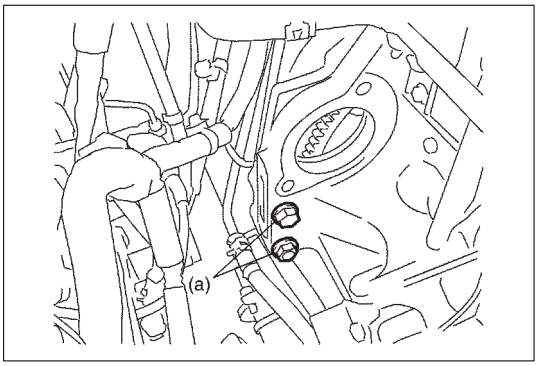

3) Tighten bolts and nuts fastening cylinder block and transmission to specified torque.

   Tightening Torque
   Vehicle with M/T
   (a): 94 N·m (9.4 kg-m, 68.0 lb-ft)
   Vehicle with A/T
   (a): 80 N·m (8.0 kg-m, 58.0 lb-ft)

4) Remove lifting device.

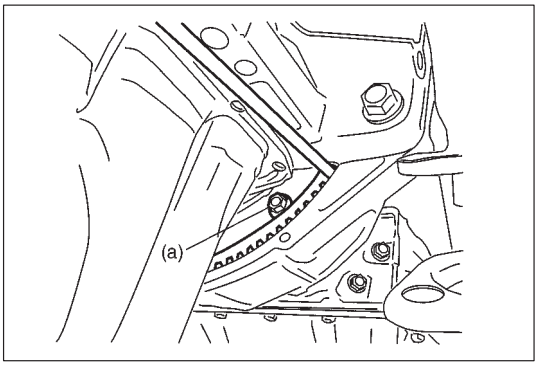

5) Reverse removal procedure for installation, noting the following points.
   - Tighten torque converter bolts to specified torque (vehicle with A/T).

     Tightening Torque
     (a): 20 N·m (2.0 kg-m, 14.5 lb-ft)

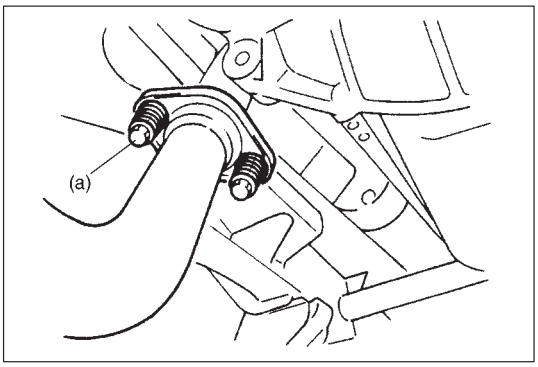

   - Install seal ring and exhaust pipe to exhaust manifold. Tighten pipe fasteners to specified torque.

     Tightening Torque
     (a): 50 N·m (5.0 kg-m, 36.5 lb-ft)

6) Reverse disconnected hoses, cables and electric wires for connection.
7) Install air cleaner outlet hoses.
8) Install radiator with cooling fan and connect A/T fluid hoses (vehicle with A/T), radiator inlet and outlet hoses referring to Section 6B.
9) Adjust generator belt tension referring to Section 6B.
10) Adjust A/C compressor and/or P/S pump belt tension (if equipped) referring to Section 1B or 3B1.
11) Adjust accelerator cable play referring to Section 6E.
12) Check to ensure that all removed parts are back in place. Reinstall any necessary parts which have not been reinstalled.
13) Refill cooling system with coolant engine with engine oil and A/T with specified A/T fluid (vehicle with A/T).
14) Connect negative cable at battery.
15) Verify that there is no fuel leakage, coolant leakage, oil leakage, A/T fluid leakage (vehicle with A/T) and exhaust gas leakage at each connection.

MAIN BEARINGS, CRANKSHAFT AND CYLINDER BLOCK

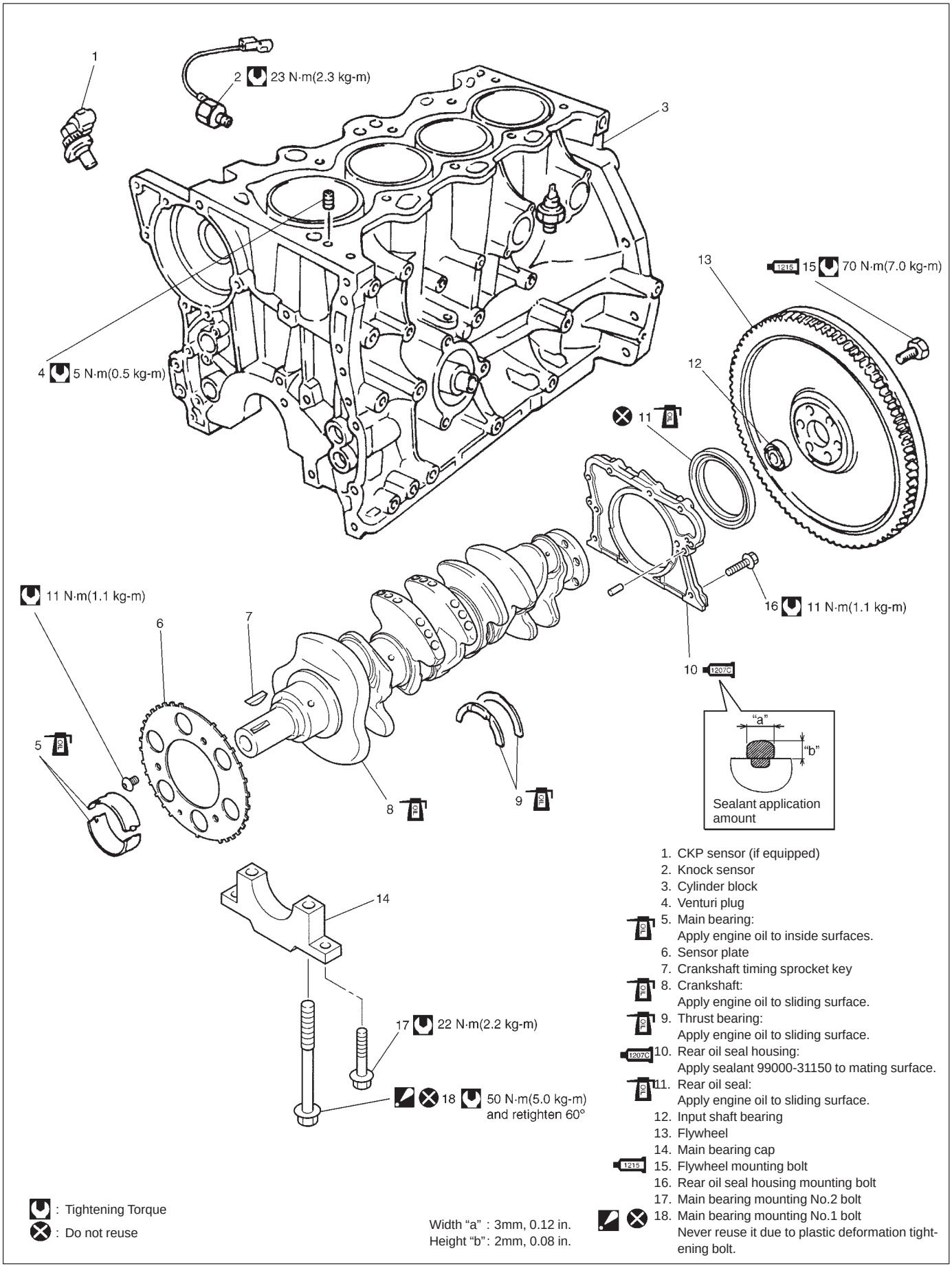

1. CKP sensor (if equipped)
2. Knock sensor
3. Cylinder block
4. Venturi plug
5. Main bearing: Apply engine oil to inside surfaces.
6. Sensor plate
7. Crankshaft timing sprocket key
8. Crankshaft: Apply engine oil to sliding surface.
9. Thrust bearing: Apply engine oil to sliding surface.
10. Rear oil seal housing: Apply sealant 99000-31150 to mating surface.
11. Rear oil seal: Apply engine oil to sliding surface.
12. Input shaft bearing
13. Flywheel
14. Main bearing cap
15. Flywheel mounting bolt
16. Rear oil seal housing mounting bolt
17. Main bearing mounting No.2 bolt
18. Main bearing mounting No.1 bolt Never reuse it due to plastic deformation tightening bolt.

: Tightening Torque
: Do not reuse

Width "a" : 3mm, 0.12 in.
Height "b": 2mm, 0.08 in.

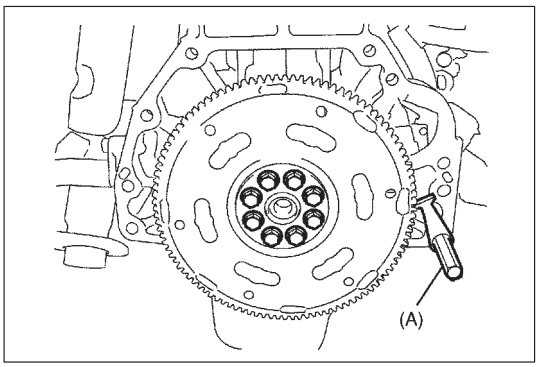

REMOVAL

1) Remove engine assembly from vehicle as previously outlined.
2) Remove clutch cover, clutch disc and flywheel (drive plate for A/T) by using special tool.

Special Tool
(A): 09924-17810

3) Remove the following parts from engine as previously outlined.
   - Oil pan and oil pump strainer
   - Intake manifold and exhaust manifold
   - Cylinder head cover
   - Timing chain cover
   - Timing chain guide, chain tensioner adjuster, chain tensioner, timing chain and crankshaft timing sprocket
   - Camshaft, tappet and shim
   - Cylinder head assembly
   - Piston and connecting rod

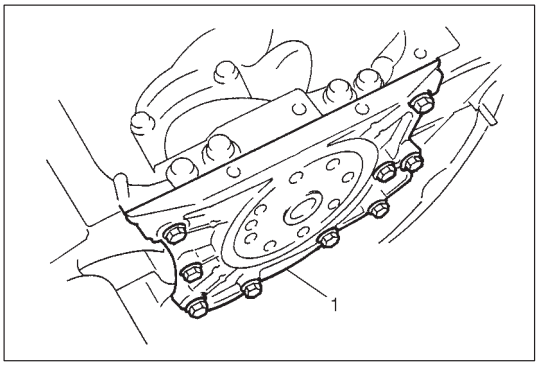

4) Remove rear oil seal housing (1).

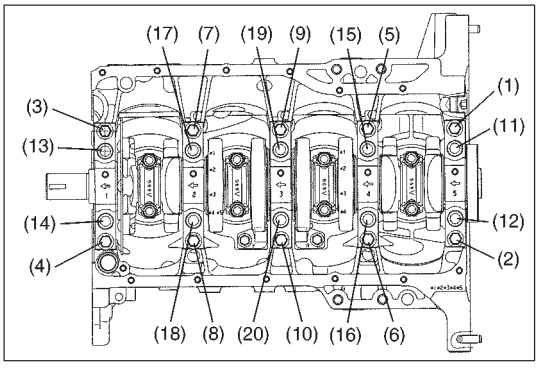

5) Loosen bearing cap No.1 and No.2 bolts in such order as indicated in figure and remove them.
6) Remove crankshaft from cylinder block.

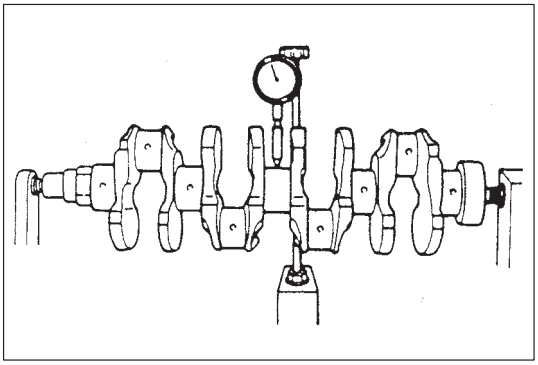

INSPECTION

Crankshaft

Crankshaft runout

Using a dial gauge, measure runout at center journal. Rotate crankshaft slowly. If runout exceeds its limit, replace crankshaft.

Limit on runout: 0.04 mm (0.0016 in.)

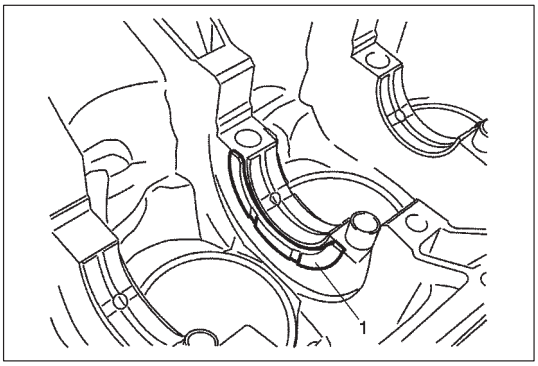

Crankshaft thrust play

Measure this play with crankshaft set in cylinder block in the normal manner, that is with thrust bearing (1) and journal bearing caps installed.

Thickness of crankshaft thrust bearing	Standard		2.500 mm (0.0984 in.)
	Oversize:	0.125 mm (0.0049 in.)	2.563 mm (0.1009 in.)

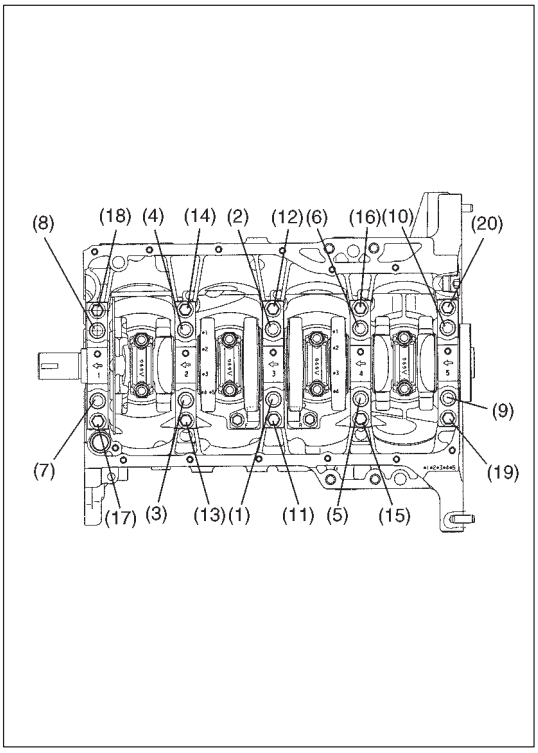

Tighten bearing cap No.1 bolts (1) – (10) and No.2 bolts (11) – (20) gradually as follows.

1) Tighten bolts (1) – (10) to 30 N·m (3.0 kg-m, 22.0 lb-ft) according to numerical order in figure.
2) In the same manner as in Step 1), tighten them to 50 N·m (5.0 kg-m, 36.5 lb-ft).
3) Tighten bolts (11) – (20) to 22 N·m (2.2 kg-m, 16.0 lb-ft) according to numerical order in figure.

Tightening Torque
(1) – (10): 50 N·m (5.0 kg-m, 36.5 lb-ft)
(11) – (20): 22 N·m (2.2 kg-m, 16.0 lb-ft)

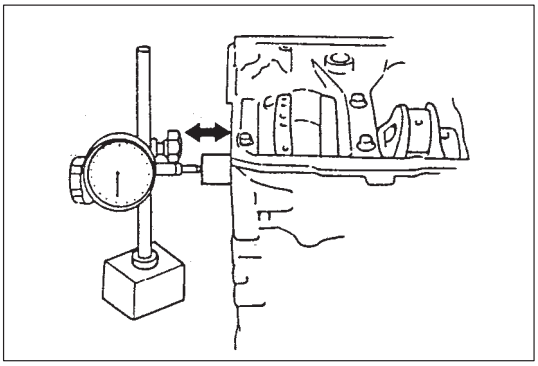

Use a dial gauge to read displacement in axial (thrust) direction of crankshaft.
If its limit is exceeded, replace thrust bearing with new standard one or oversize one to obtain standard thrust play.

Crankshaft Thrust Play
Standard : 0.11 – 0.31 mm (0.0043 – 0.0122 in.)
Limit : 0.35 mm (0.0138 in.)

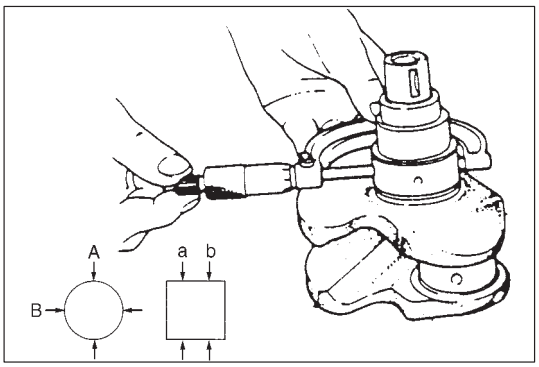

Out-of-round and taper (uneven wear) of journals

An unevenly worn crankshaft journal shows up as a difference in diameter at a cross section or along its length (or both). This difference, if any, is determined by taking micrometer readings. If any one of journals is badly damaged or if amount of uneven wear in the sense explained above exceeds its limit, regrind or replace crankshaft.

Limit on out-of-round and taper: 0.01 mm (0.0004 in.)

Out-of-round: A – B

Taper: a – b

Main Bearings

General information

- Service main bearings are available in standard size and 0.25 mm (0.0098 in.) undersize, and each of them has 5 kinds of bearings differing in tolerance.

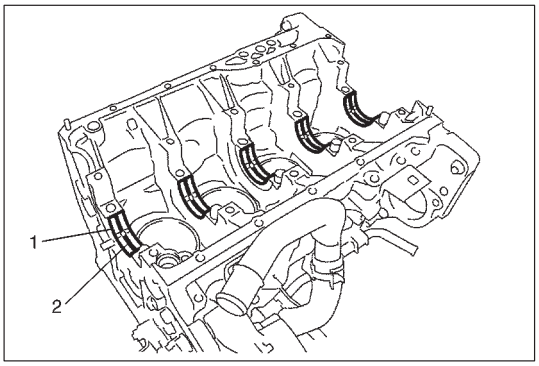

- Upper half of bearing (1) has an oil groove (2) as shown in figure. Install this half with oil groove to cylinder block.
- Lower half of bearing does not have an oil groove.

Visual inspection

Check bearings for pitting, scratches, wear or damage.

If any malcondition is found, replace both upper and lower halves. Never replace either half without replacing the other half.

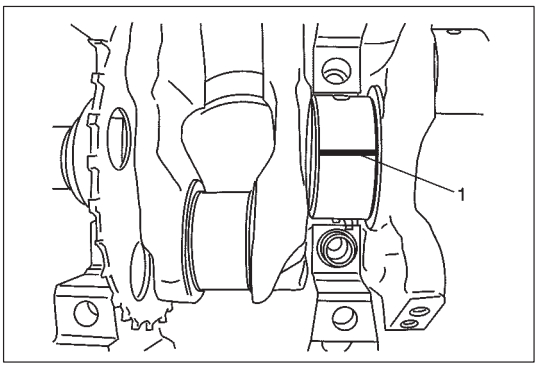

Main bearing clearance

Check clearance by using gaging plastic according to the following procedure.

1) Remove bearing caps.
2) Clean bearings and main journals.
3) Place a piece of gaging plastic (1) the full width of bearing (parallel to crankshaft) on journal, avoiding oil hole.

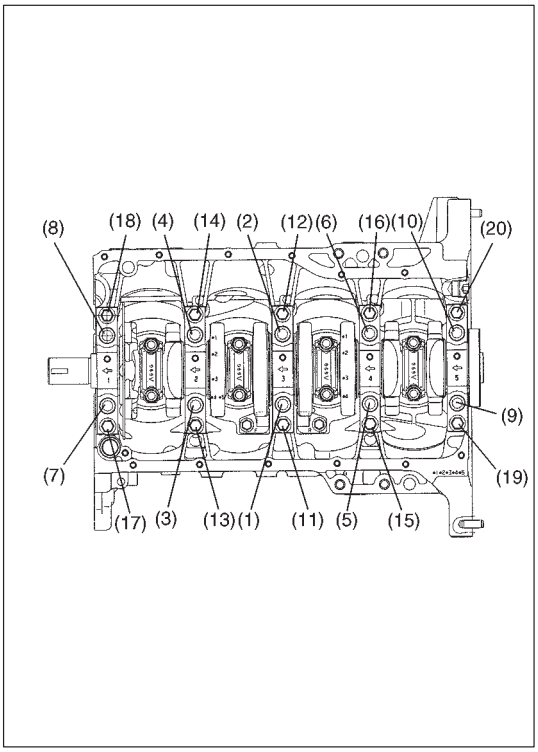

4) Tighten bearing cap No.1 bolts (1) – (10) and No.2 bolts (11) – (20) gradually as follows.
   a) Tighten bolts (1) – (10) to 30 N·m (3.0 kg-m, 22.0 lb-ft) according to numerical order in figure.
   b) In the same manner as in Step a), tighten them to 50 N·m (5.0 kg-m, 36.5 lb-ft).
   c) Tighten bolts (11) – (20) to 22 N·m (2.2 kg-m, 16.0 lb-ft) according to numerical order in figure.

   Tightening Torque
   (1) – (10) : 50 N·m (5.0 kg-m, 36.5 lb-ft)
   (11) – (20) : 22 N·m (2.2 kg-m, 16.0 lb-ft)

NOTE:
Do not rotate crankshaft while gaging plastic is installed.

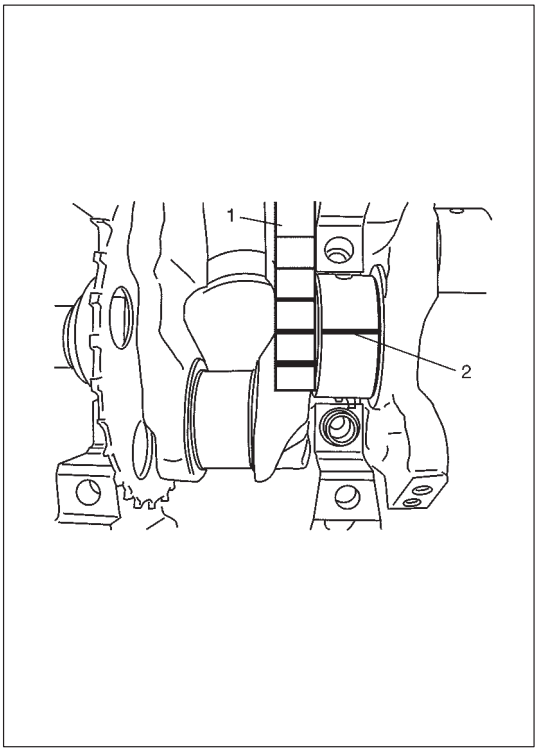

5) Remove bearing caps and using scale (1) on gaging plastic (2) envelop, measure gaging plastic width at its widest point. If clearance exceeds its limit, replace bearing. Always replace both upper and lower inserts as a unit.
   A new standard bearing may produce proper clearance. If not, it will be necessary to regrind crankshaft journal for use of 0.25 mm undersize bearing.
   After selecting new bearing, recheck clearance.

	Standard	Limit
Bearing clearance	0.025 – 0.045 mm (0.0010 – 0.0018 in.)	0.065 mm (0.0026 in.)

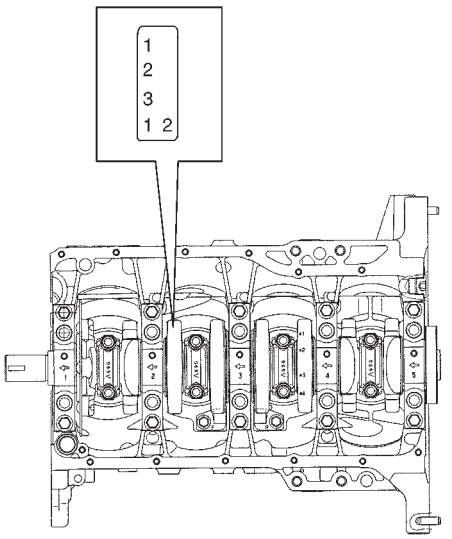

Selection of main bearings

STANDARD BEARING:

If bearing is in malcondition, or bearing clearance is out of specification, select a new standard bearing according to the following procedure and install it.

1) First check journal diameter. As shown in figure, crank web No.2 has stamped numbers.
   Three kinds of numbers ("1", "2" and "3") represent the following journal diameters.

Stamped numbers	Journal diameter
1	44.994 – 45.000 mm (1.7714 – 1.7717 in.)
2	44.988 – 44.994 mm (1.7712 – 1.7714 in.)
3	44.982 – 44.988 mm (1.7709 – 1.7712 in.)

   Stamped numbers on crank web No.2 represent journal diameters marked with an arrow in figure respectively.
   For example, stamped number "1" indicates that corresponding journal diameter is 44.994 – 45.000 mm (1.7714 – 1.7717 in.).

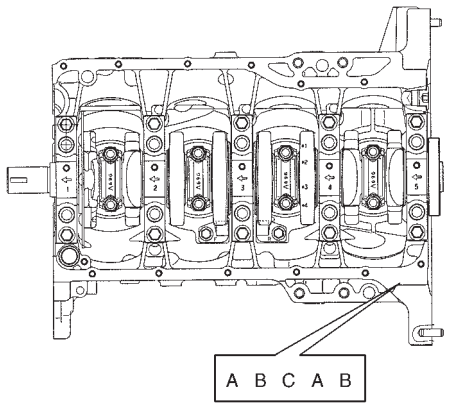

2) Next, check bearing cap bore diameter without bearing. On mating surface of cylinder block, five alphabets are stamped as shown in figure.
   Three kinds of alphabets ("A", "B" and "C") represent the following cap bore diameters.

Stamped alphabet	Bearing cap bore diameter (without bearing)
A	49.000 – 49.006 mm (1.9291 – 1.9294 in.)
B	49.006 – 49.012 mm (1.9294 – 1.9296 in.)
C	49.012 – 49.018 mm (1.9296 – 1.9298 in.)

   Stamped alphabets on cylinder block represent bearing cap bore diameter marked with an arrow in figure respectively. For example, stamped "A" indicates that corresponding bearing cap bore diameter is 49.000 – 49.006 mm (1.9291 – 1.9294 in.).

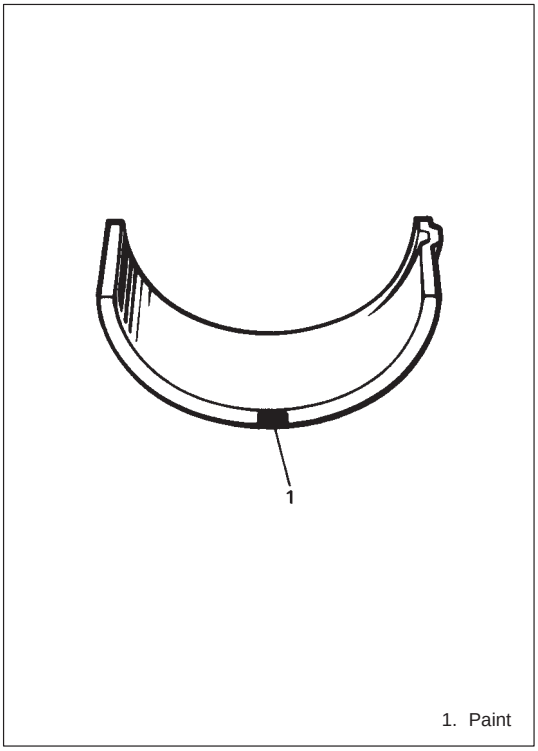

1. Paint

3) There are five kinds of standard bearings differing in thickness. To distinguish them, they are painted in the following colors at the position as indicated in figure.
Each color indicated the following thickness at the center of bearing.

Color painted	Bearing thickness
Pink	1.990 – 1.994 mm (0.0783 – 0.0785 in.)
Purple	1.993 – 1.997 mm (0.0785 – 0.0786 in.)
Brown	1.996 – 2.000 mm (0.0786 – 0.0787 in.)
Green	1.999 – 2.003 mm (0.0787 – 0.0789 in.)
Black	2.002 – 2.006 mm (0.0788 – 0.0790 in.)

4) From number stamped on crank web No.2 and alphabets stamped on cylinder block, determine new standard bearing to be installed to journal, by referring to table shown below.
For example, if number stamped on crank web No.2 is “1” and alphabet stamped on cylinder block is “B”, install a new standard bearing painted in “Purple” to its journal.

		Number stamped on crank web No.2 (Journal diameter)		
		1	2	3
Alphabet stamped on cylinder block (Cap bore dia.)	A	Pink	Purple	Brown
	B	Purple	Brown	Green
	C	Brown	Green	Black
		New standard bearing to be installed.		

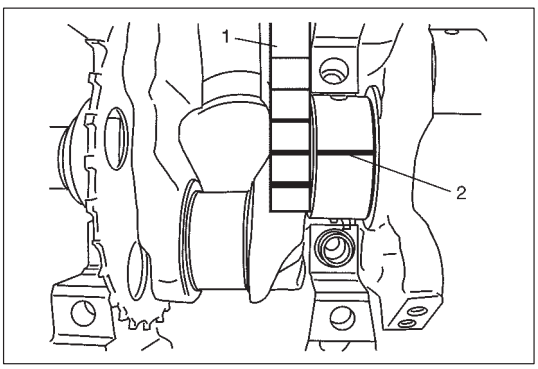

5) Using scale (1) on gaging plastic (2), check bearing clearance with newly selected standard bearing.
If clearance still exceeds its limit, use next thicker bearing and recheck clearance.
6) When replacing crankshaft or cylinder block due to any reason, select new standard bearings to be installed by referring to number stamped on new crankshaft or alphabets stamped on new cylinder block.

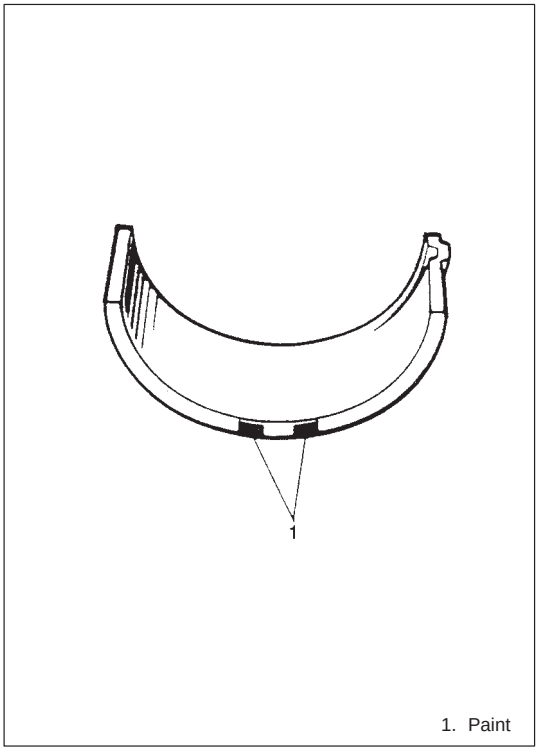

1. Paint

UNDERSIZE BEARING (0.25 mm):

- 0.25 mm undersize bearing is available, in five kinds varying in thickness.
  To distinguish them, each bearing is painted in the following colors at such position as indicated in figure.
  Each color represents the following thickness at the center of bearing.

Color painted	Bearing thickness
Red and Pink	2.115 – 2.119 mm (0.0833 – 0.0834 in.)
Red and Purple	2.118 – 2.122 mm (0.0834 – 0.0835 in.)
Red and Brown	2.121 – 2.125 mm (0.0835 – 0.0837 in.)
Red and Green	2.124 – 2.128 mm (0.0836 – 0.0838 in.)
Red and Black	2.127 – 2.131 mm (0.0837 – 0.0839 in.)

- If necessary, regrind crankshaft journal and select undersize bearing to use with it as follows.
  1) Regrind journal to the following finished diameter.

Finished diameter: 44.732 – 44.750 mm (1.7611 – 1.7618 in.)

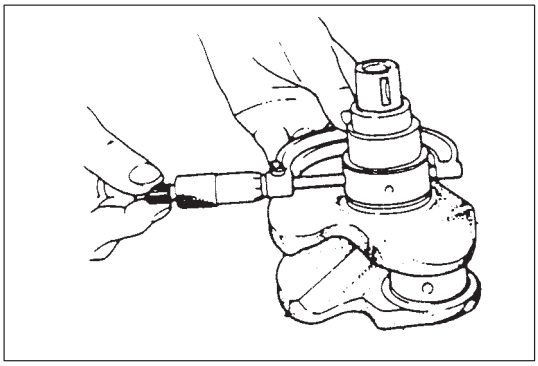

1) Using micrometer, measure reground journal diameter.
   Measurement should be taken in two directions perpendicular to each other in order to check for out-of-round.
2) Using journal diameter measured above and alphabets stamped on cylinder block, select an undersize bearing by referring to table given below.
   Check bearing clearance with newly selected undersize bearing.

		Measured journal diameter		
		44.744 – 44.750 mm (1.7616 – 1.7618 in.)	44.738 – 44.744 mm (1.7613 – 1.7616 in.)	44.732 – 44.738 mm (1.7611 – 1.7613 in.)
Alphabets stamped on cylinder block	A	Red and Pink	Red and Purple	Red and Brown
	B	Red and Purple	Red and Brown	Red and Green
	C	Red and Brown	Red and Green	Red and Black
		Undersize bearing to be installed		

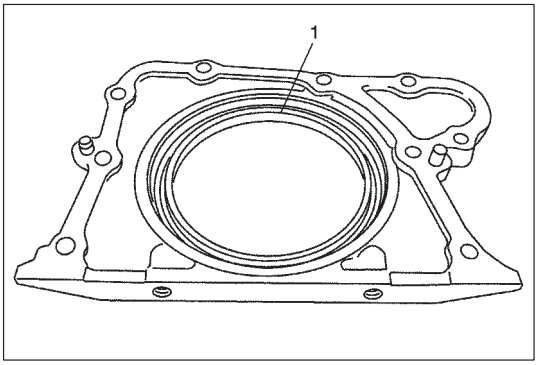

Rear Oil Seal

Carefully inspect oil seal (1) for wear or damage.
If its lip is worn or damaged, replace it.

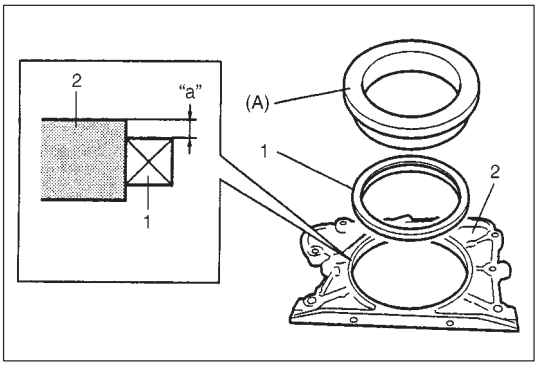

For oil seal installation, press-fit rear oil seal (1) to oil seal housing (2) by using special tool as shown in the figure.

Special Tool
(A): 09911-97820

Dimension "a": 3 mm (0.12 in.)

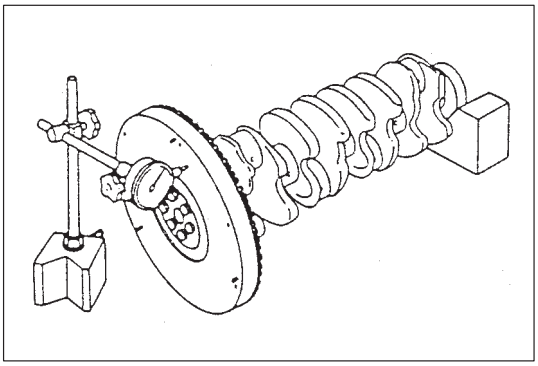

Flywheel

- If ring gear is damaged, cracked or worn, replace flywheel.
- If the surface contacting clutch disc is damaged, or excessively worn, replace flywheel.
- Check flywheel for face runout with a dial gauge.
  If runout exceeds its limit, replace flywheel.

  Limit on runout: 0.2 mm (0.0079 in.)

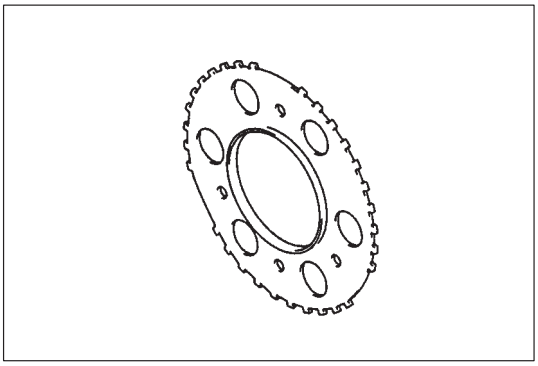

Sensor plate

- Check sensor plate for crack or damage. If malcondition is found, replace it.

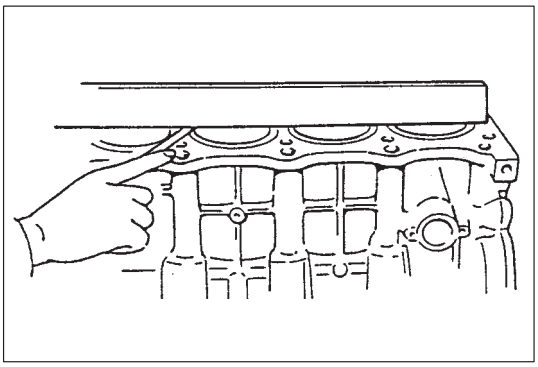

Cylinder Block
Distortion of gasketed surface

- Using straightedge and thickness gauge, check gasketed surface for distortion and, if flatness exceeds its limit, correct it.

  Flatness Limit: 0.05 mm (0.0020 in.)

Honing or reboring cylinders

1) When any cylinder needs reboring, all other cylinders must also be rebored at the same time.
2) Select oversized piston according to amount of cylinder wear.

Size	Piston diameter
Oversize 0.25	78.203 – 78.218 mm (3.0789 – 3.0794 in.)
Oversize 0.50	78.453 – 78.468 mm (3.0887 – 3.0893 in.)

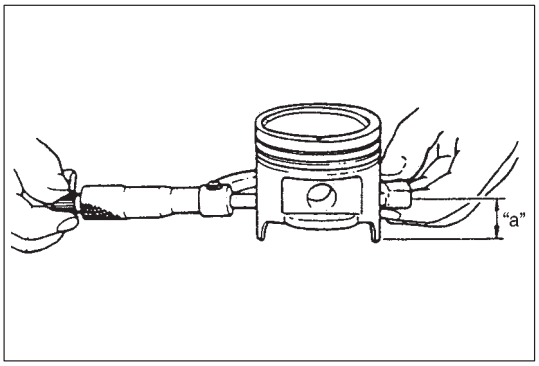

3) Using micrometer, measure piston diameter.

   "a": 19.5 mm (0.77 in.)

4) Calculate cylinder bore diameter to be rebored as follows.
   D = A + B – C
   D: Cylinder bore diameter to be rebored.
   A: Piston diameter as measured.
   B: Piston clearance = 0.02 – 0.04 mm (0.0008 – 0.0016 in.)
   C: Allowance for honing = 0.02 mm (0.0008 in.)
5) Rebore and hone cylinder to calculated dimension.

   NOTE:
   Before reboring, install all main bearing caps in place and tighten to specification to avoid distortion of bearing bores.

6) Measure piston clearance after honing.

INSTALLATION

NOTE:

- **All parts to be installed must be perfectly clean.**
- **Be sure to oil crankshaft journals, journal bearings, thrust bearings, crankpins, connecting rod bearings, pistons, piston rings and cylinder bores.**
- **Journal bearings, bearings caps, connecting rods, rod bearings, rod bearing caps, pistons and piston rings are in combination sets. Do not disturb such combination and make sure that each part goes back to where it came from, when installing.**

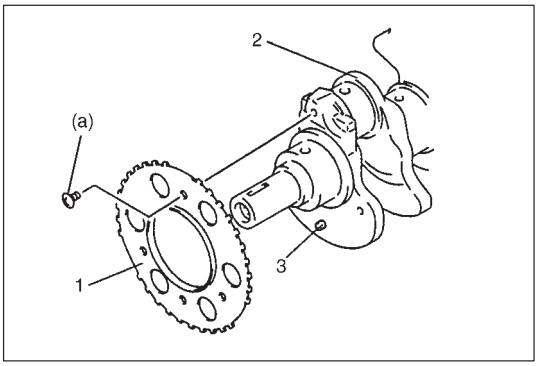

1) Install sensor plate (1) to crankshaft (2) and tighten bolts to specified torque.

   NOTE:
   When installing sensor plate, align spring pin (3) on crankshaft and hole of sensor plate.

   Tightening Torque
   (a): 11 N·m (1.1 kg-m, 8.0 lb-ft)

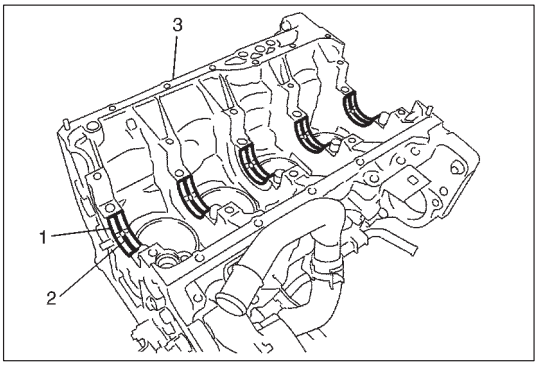

2) Install main bearings to cylinder block.
   Upper half of bearing (1), has an oil groove (2).
   Install it to cylinder block (3), and the other half without oil groove to bearing cap.
   Make sure that two halves are painted in the same color.

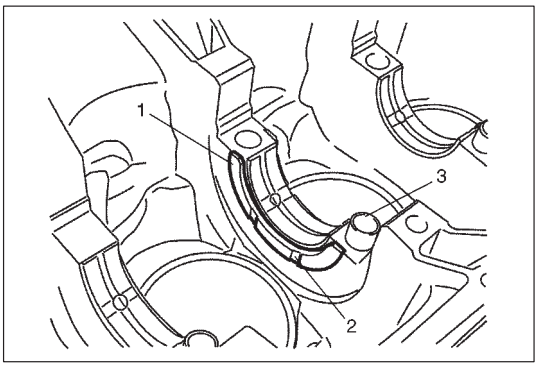

3) Install thrust bearings (1) to cylinder block between No.2 and No.3 cylinders. Face oil groove (2) sides to crank webs.
4) Confirm that dowel pins(3) are installed to intake side of each journal.

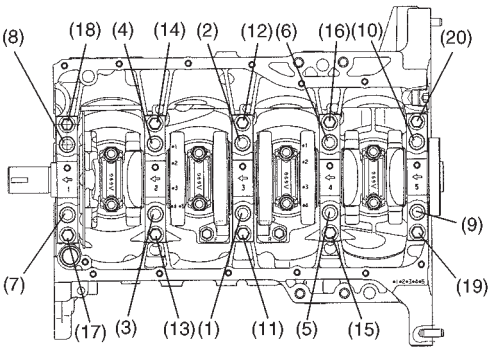

5) Install crankshaft to cylinder block.
6) Install bearing cap to cylinder block, making sure to point arrow mark (on each cap) to crankshaft pulley side. Fit them sequentially in ascending order, 1, 2, 3, 4 and 5, starting from pulley side.
   After applying engine oil to new bearing cap No.1 bolts ((1) – (10)) and bearing cap No.2 bolts ((11) – (20)), tighten them gradually as follows.
   a) Tighten bolts (1) – (10) to 30 N·m (3.0 kg-m, 22.0 lb-ft) according to numerical order as shown by using a 12 corner socket wrenches.
   b) In the same manner as in Step a), tighten them to 50 N·m (5.0 kg-m, 36.5 lb-ft).
   c) In the same manner as in Step a), retighten them to 60°.
   d) Tighten bolts (11) – (20) to 22 N·m (2.2 kg-m, 16.0 lb-ft) according to numerical order as shown.

Tightening Torque
(1) – (10) : 50 N·m (5.0 kg-m, 36.5 lb-ft) and retighten 60°
(11) – (20) : 22 N·m (2.2 kg-m, 16.0 lb-ft)

NOTE:
- **Never reuse bearing cap NO.1 bolts (1) – (10) once disassembled it due to plastic deformation tightening.**
- **After tightening cap bolts, check to be sure that crankshaft rotates smoothly when turning it by 12 N·m (1.2 kg-m, 9.0 lb-ft) torque or below.**

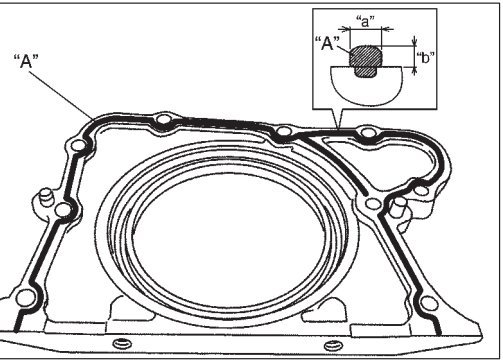

7) Apply sealant to mating surface of rear oil seal housing (1).

"A": Sealant 99000-31150

Width "a" : 3 mm, 0.12 in.
Height "b" : 2 mm, 0.08 in.

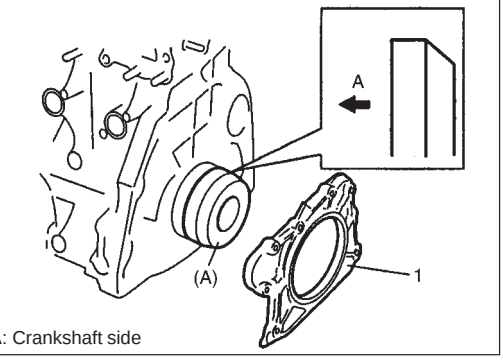

8) Install rear oil seal housing (1) and tighten bolts to specified torque by using special tool.

Special Tool
(A): 09911-97720

Tightening Torque:
11 N·m (1.1 kg-m, 8.0 lb-ft)

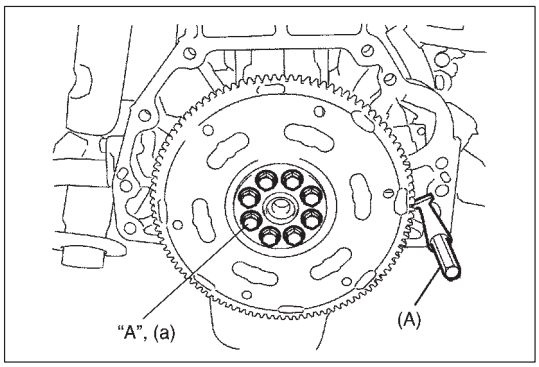

9) Install flywheel (drive plate for A/T).
Using special tool, lock flywheel or drive plate, and tighten flywheel or drive plate bolts applied with sealant to specification.

"A": Sealant 1215 99000-31110

Special Tool
(A): 09924-17810

Tightening Torque
(a): 70 N·m (7.0 kg-m, 51.0 lb-ft)

10) Install the following parts to engine as previously outlined.
- Piston and connecting rod
- Cylinder head assembly
- Camshaft, tappet and shim
- Timing chain guide, chain tensioner adjuster, chain tensioner, timing chain and crankshaft timing sprocket
- Timing chain cover
- Cylinder head cover
- Intake manifold and exhaust manifold
- Oil pan and oil pump strainer

11) Install clutch to flywheel (vehicle with M/T) referring to Section 7C.
12) Install engine assembly to vehicle as previously outlined.

SPECIAL TOOLS

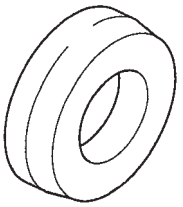 09911-97720 Oil seal guide	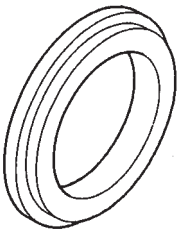 09911-97820 Oil seal installer	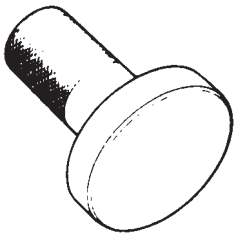 09913-75520 Bearing installer	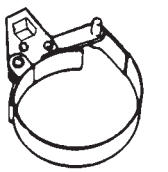 09915-47330 Oil filter wrench
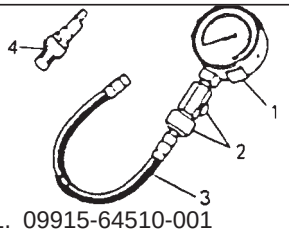 1. 09915-64510-001 Compression gauge 2. 09915-64510-002 Connector 3. 09915-64530 Hose 4. 09915-67010 Attachment	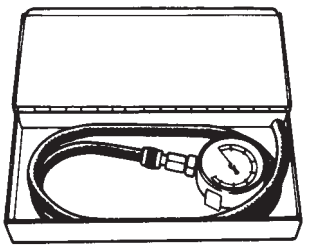 09915-67310 Vacuum gauge	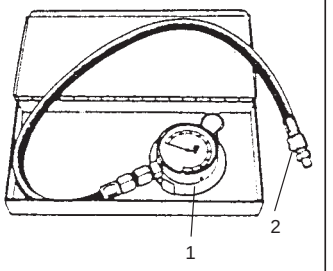 1. 09915-77310 Oil pressure gauge 2. 09915-78211 Oil pressure gauge attachment	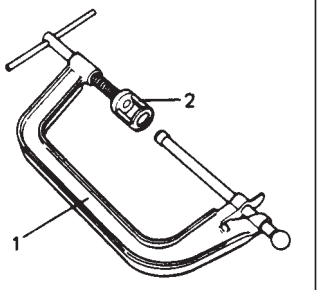 1. 09916-14510 Valve lifter 2. 09916-14910 Valve lifter attachment
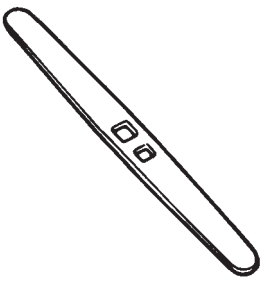 09916-34542 Reamer handle	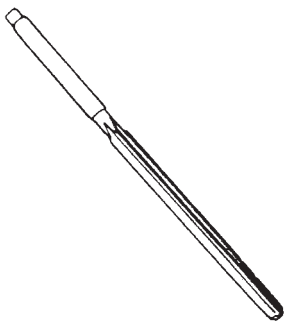 09916-34550 Reamer (5.5 mm)	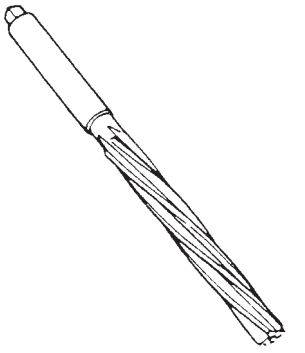 09916-37320 Reamer (10.5 mm)	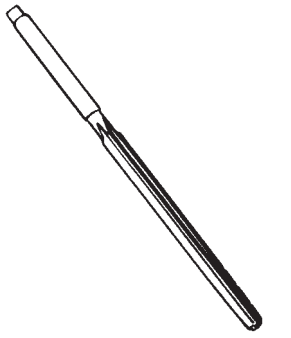 09916-37810 Reamer (6 mm)
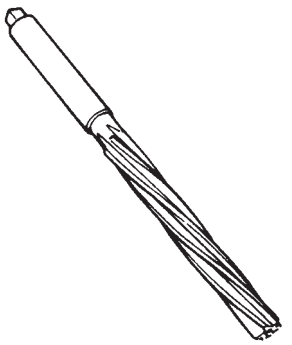 09916-38210 Reamer (11 mm)	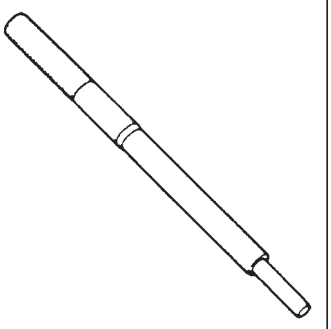 09916-44910 Valve guide remover	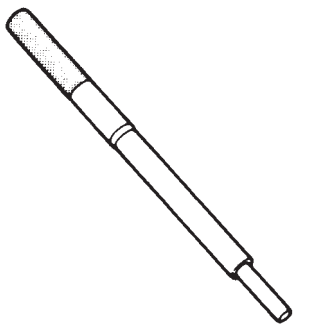 09916-46020 Valve guide remover	 09916-56011 Valve guide installer attachment

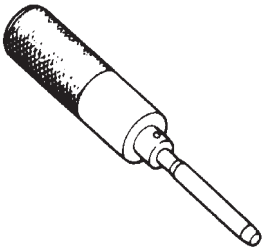 09916-57350 Valve guide installer handle	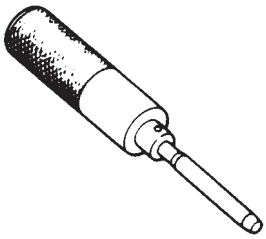 09916-58210 Valve guide installer handle	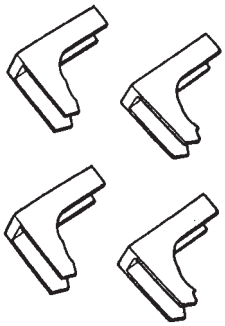 09916-67020 Tapper holder	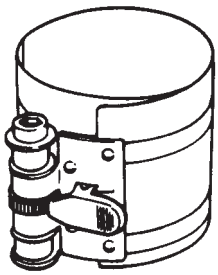 09916-77310 Piston ring compressor
 09916-84511 Forceps	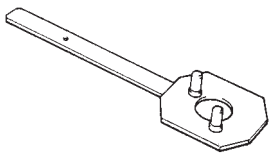 09917-68221 Camshaft lock holder	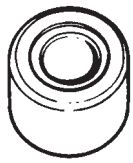 09917-88240 Valve guide installer	 09917-88250 Valve guide installer
 09917-98221 Valve stem seal installer	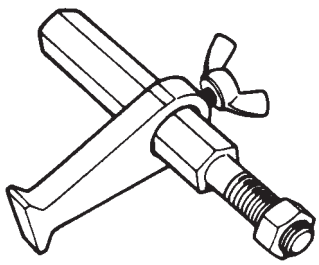 09924-17810 Flywheel holder	 09926-58010 Bearing puller attachment	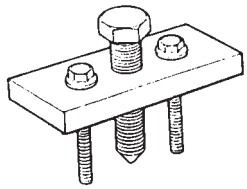 09944-36011 Steering wheel remover

REQUIRED SERVICE MATERIALS

RECOMMENDED SUZUKI PRODUCT	USE
Sealant 1207C 99000-31150	● To apply to mating surfaces of cylinder block and oil pan. ● To apply to mating surfaces of cylinder block and timing chain cover. ● To apply to sealing surfaces of cylinder head cover. ● To apply to mating surfaces to rear oil seal housing.
Sealant 1207B 99000-31140	● To apply to mating surface of cylinder block, cylinder head and timing chain cover.
Sealant 1215 99000-31110	● To apply to the thread of the bolt of water outlet pipe. ● To flywheel (M/T) or drive plate (A/T) bolts.

SECTION 6B

ENGINE COOLING

NOTE:
For the descriptions (items) not found in this section, refer to the same section of the Service Manual mentioned in FOREWORD of this manual.

CONTENTS

GENERAL DESCRIPTION 6B- 2
Cooling System Circulation 6B- 2
MAINTENANCE 6B- 3
Coolant 6B- 3
Cooling System Service 6B- 4
Water Pump Belt Tension 6B- 5
ON-VEHICLE SERVICE 6B- 6
Cooling System Component 6B- 6
Thermostat 6B- 8
Water Pump Belt and Cooling Fan 6B- 9
Radiator 6B-10
Water Pump 6B-11
REQUIRED SERVICE MATERIAL 6B-13

GENERAL DESCRIPTION

COOLING SYSTEM CIRCULATION

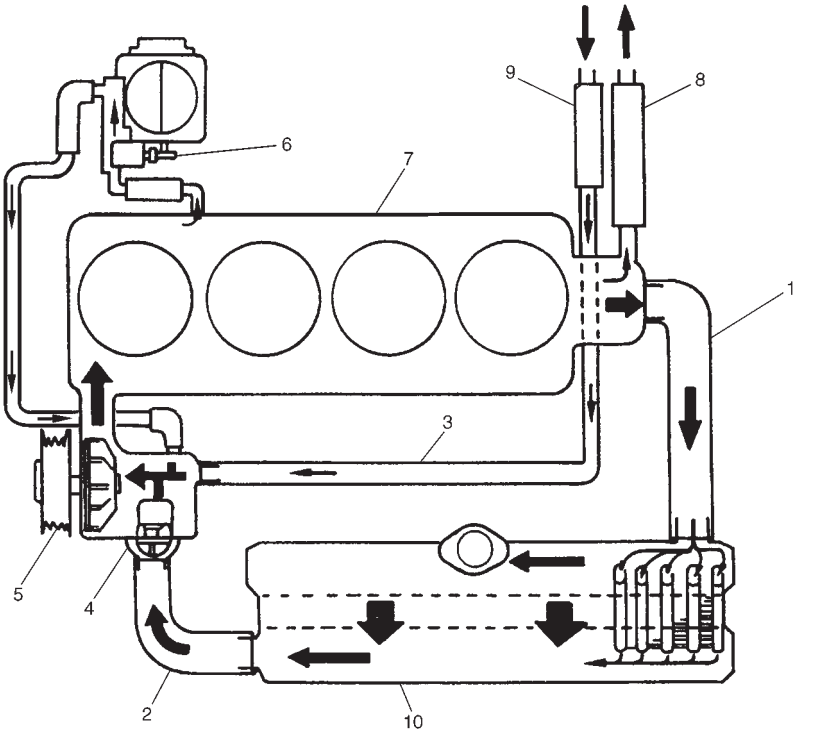

1. Radiator inlet hose
2. Radiator outlet hose
3. Water inlet pipe
4. Thermostat
5. Water pump
6. Fast idle control plunger (throttle body)
7. Engine
8. Heater inlet hose
9. Heater outlet hose
10. Radiator

MAINTENANCE

COOLANT

		For manual and automatic transmission model		
ANTI-FREEZE PROPORTIONING CHART	Freezing temperature	C	–16	–36
		F	3	–33
	Anti-freeze/Anti-corrosion coolant concentration	%	30	50
	Ratio of compound to cooling water	ltr.	1.35/3.15	2.25/2.25
		US pt.	2.85/6.65	4.75/4.75
		lmp. pt.	2.37/5.53	3.95/3.95
COOLANT CAPACITY	Engine, radiator, heater and hoses	5.2 liters (11.0/9.2 US/lmp pt.)		
	Reservoir tank	0.7 liters (1.5/1.2 US/lmp pt.)		
	Total	5.9 liters (12.5/10.5 US/lmp pt.)		

NOTE:

- **Alcohol or methanol base coolant or plain water alone should not be used in cooling system at any time as damage to cooling system could occur.**
- **Even in a market where no freezing temperature is anticipated, mixture of 70% water and 30% ethylene glycol antifreeze (Antifreeze/Anticorrosion coolant) should be used for the purpose of corrosion protection and lubrication.**

COOLING SYSTEM SERVICE

WARNING:
To help avoid danger of being burned, do not remove radiator cap while engine and radiator are still hot.
Scalding fluid and steam can be blown out under pressure if cap is taken off too soon.

Cooling system should be serviced as follows.
1) Check cooling system for leakage or damage.
2) Wash radiator cap and filler neck with clean water by removing radiator cap when engine is cold.
3) Check coolant for proper level and freeze protection.
4) Using a pressure tester, check system and radiator cap for proper pressure holding capacity 1.1 kg/cm^2 (15.6 psi, 110 kPa). If replacement of cap is required, use proper cap specified for this vehicle.

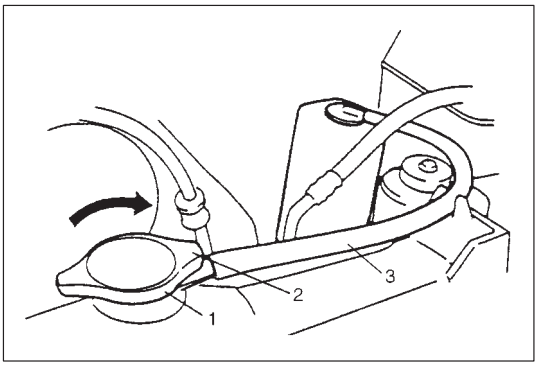

NOTE:
After installing radiator cap (1) to radiator, make sure that its ear (2) is aligned with reservoir tank hose (3) as shown in figure.
If not, turn cap more to align its ear with hose.

5) Tighten hose clamps and inspect all hoses.
Replace hoses whenever cracked, swollen or otherwise deteriorated.
6) Clean frontal area of radiator core.

WATER PIPE BELT TENSION

WARNING:
Disconnect negative cable at battery before checking and adjusting belt tension.

1) Inspect belt for cracks, cuts, deformation, wear and cleanliness. If it is necessary to replace belt, refer to page 6B-14 for procedure.

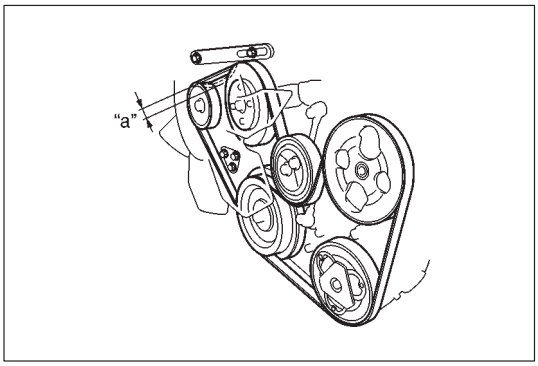

2) Check belt for tension. Belt is in proper tension when it deflects 4.5 to 5.5 mm (0.18 – 0.22 in.) under thumb pressure (about 10kg or 22 lb.).

   Belt tension "a": 4.5 – 5.5 mm (0.18 – 0.22 in.)
   as deflection/10 kg (22 lbs)

   NOTE:
   When replacing belt with a new one, adjust belt tension to 3 – 4 mm (0.12 – 0.16 in.).

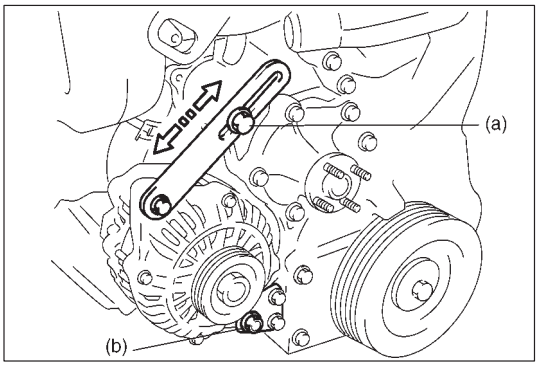

3) If belt is too tight or too loose, adjust it to proper tension by displacing generator position.
4) Tighten generator adjusting bolt and pivot bolts as specified torque.

   Tightening Torque
   (a): 23 N·m (2.3 kg-m, 17.0 lb-ft)
   (b): 50 N·m (5.0 kg-m, 36.0 lb-ft)

5) Connect negative cable at battery terminal.

ON-VEHICLE SERVICE

WARNING:
- **Check to make sure that engine coolant temperature is cold before removing any part of cooling system.**
- **Also be sure to disconnect negative cord from battery terminal before removing any part.**

COOLING SYSTEM COMPONENT

PIPES AND HOSES

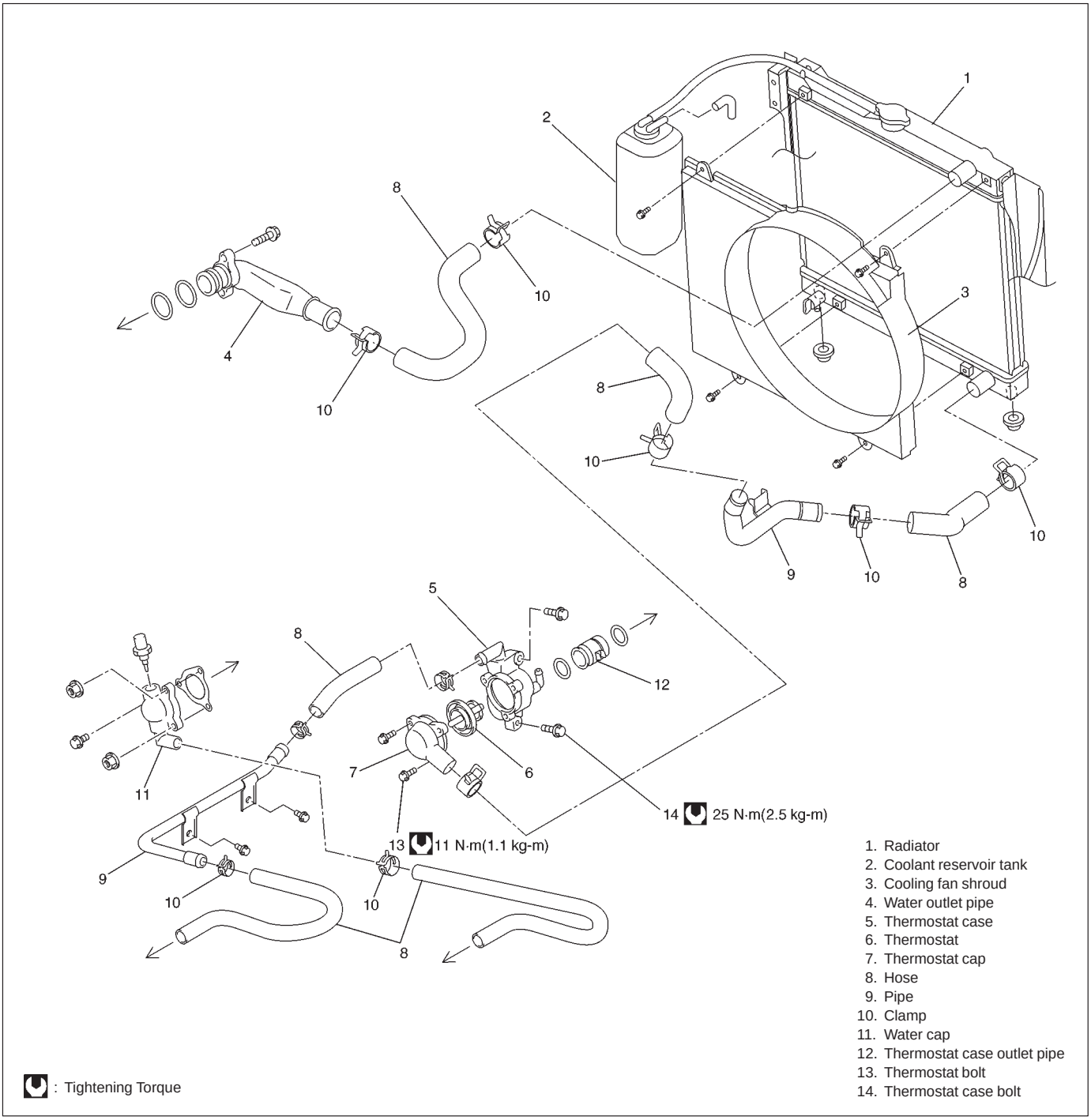

1. Radiator
2. Coolant reservoir tank
3. Cooling fan shroud
4. Water outlet pipe
5. Thermostat case
6. Thermostat
7. Thermostat cap
8. Hose
9. Pipe
10. Clamp
11. Water cap
12. Thermostat case outlet pipe
13. Thermostat bolt
14. Thermostat case bolt

: Tightening Torque

WATER PUMP

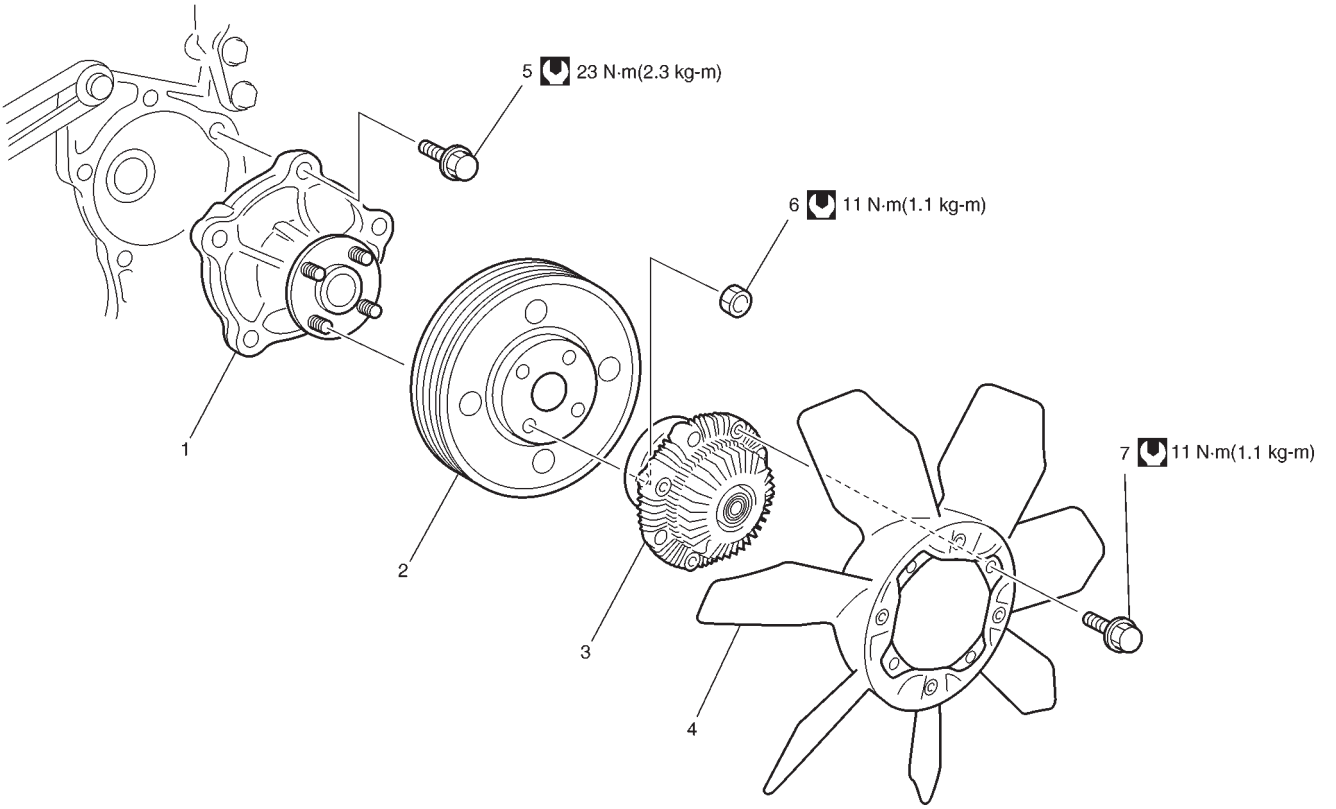

1. Water pump
2. Water pump pulley
3. Radiator cooling fan clutch
4. Radiator cooling fan
5. Water pump mounting bolts
6. Water pump pulley and fan clutch mounting nuts
7. Radiator cooling fan mounting bolt

: Tightening Torque

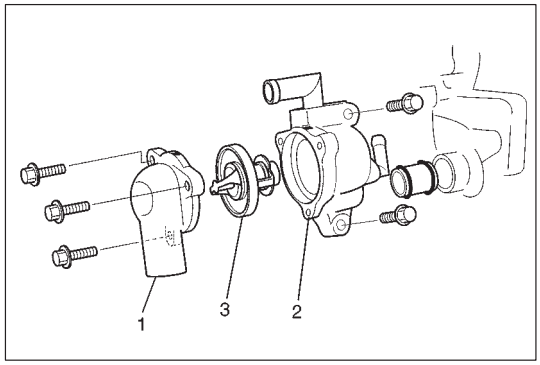

THERMOSTAT

REMOVAL

1) Drain cooling system and tighten drain plug.
2) Remove intake manifold, referring to THROTTLE BODY and INTAKE MANIFOLD in Section 6A.
3) Disconnect thermostat cap (1) from thermostat case (2).
4) Remove thermostat (3).

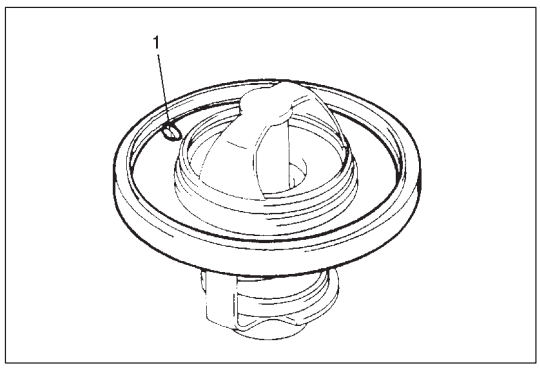

INSPECTION

1) Make sure that air bleed valve (1) of thermostat is clear. Should this valve be clogged, engine would tend to overheat.
2) Check valve seat for some foreign matters being stuck which prevent valve from seating tight.

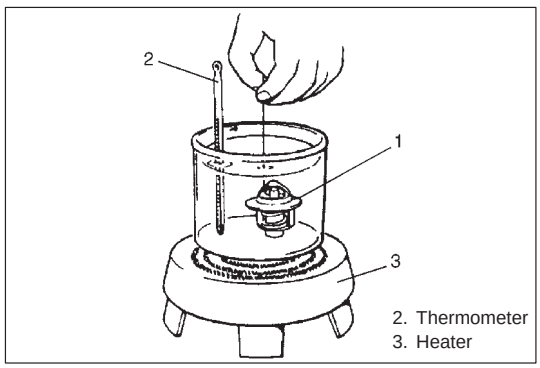

3) Check thermostatic movement of wax pellet as follows:
   - Immerse thermostat (1) in water, and heat water gradually.
   - Check that valve starts to open at specification temp.
   - If valve starts to open at a temperature substantially below or above, thermostat unit should be replaced with a new one. Such a unit, if re-used, will bring about overcooling or overheating tendency.

Thermostat functional spec. ± 2.0 °C (35.6 °F)	
Temp. at which valve begins to open	82 °C (180 °F)
Temp. at which valve become fully open	95 °C (203 °F)
Valve lift	More than 8 mm at 95 °C

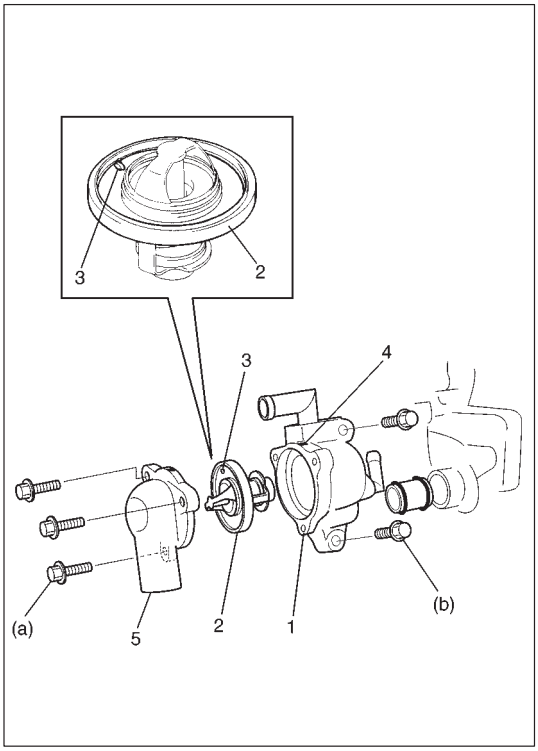

INSTALLATION

1) When positioning the thermostat (2) on the thermostat case (1), be sure to align its air breather valve (3) with mark (4).
2) Install thermostat cap (5) to thermostat case with align air bleed valve and mark.
   Then, tighten mounting bolt to specified torque.

   Tightening Torque
   (a): 11 N·m (1.1 kg-m, 8.0 lb-ft)
   (b): 25 N·m (2.5 kg-m, 18.0 lb-ft)
3) Install intake manifold by referring to THROTTLE BODY and INTAKE MANIFOLD in Section 6A.
4) Fill the cooling system.

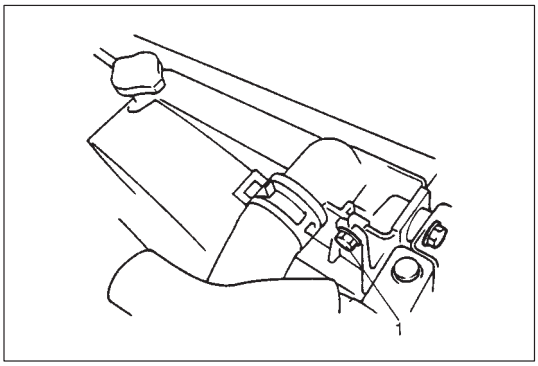

WATER PUMP BELT AND COOLING FAN

REMOVAL

1) Remove radiator shroud securing bolts (1).
2) Remove radiator by referring to RADIATOR in this section.
3) Loosen water pump drive belt tension.
4) Remove cooling fan by removing securing nuts.
   Remove power steering and/or compressor drive belt before removing water pump belt.
5) Remove pump belt.

INSTALLATION

Once cooling fan or water pump belt has been removed, make sure to tighten bolts and nuts securely in reinstallation and adjust pump belt tension to specification. (For specified tension, refer to p. 6B-11)

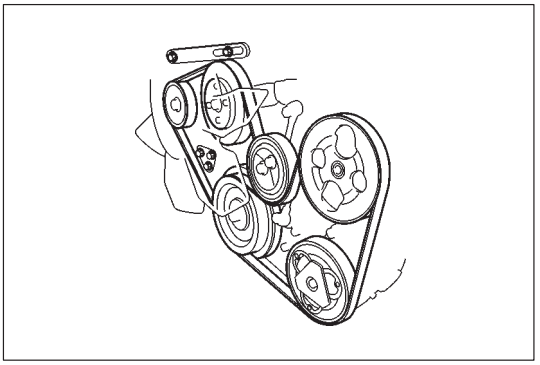

WATER PUMP BELT TENSION INSPECTION

1) Check belt tension. It should be within specification. Refer to page 6B-11.
2) If tension is out of specification, adjust it.
   For its adjustment, refer to WATER PUMP BELT TENSION on page 6B-11.
   After adjustment, be sure to tighten bolts.

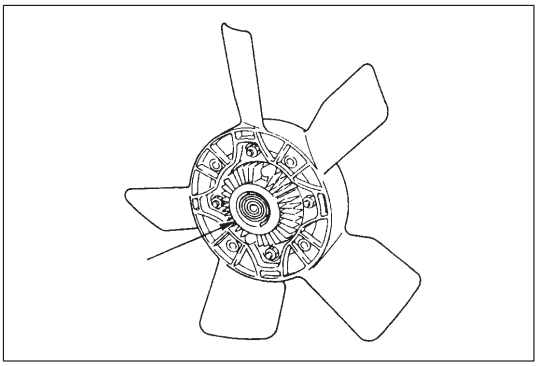

COOLING FAN CLUTCH INSPECTION

Inspect fluid coupling for oil leakage.
If necessary, replace fan clutch assembly. Do not disassemble clutch assembly.

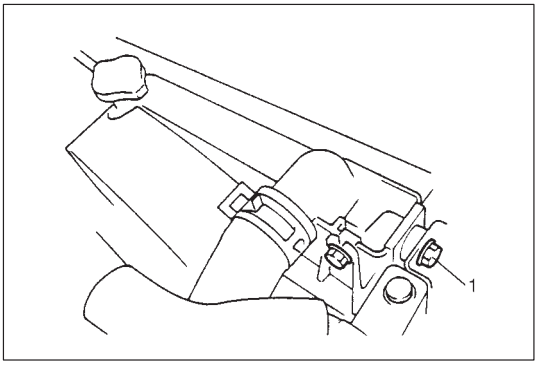

RADIATOR

REMOVAL

1) Drain cooling system.
2) Remove radiator shroud.
3) Disconnect water hoses from radiator.
4) With automatic transmission (A/T) vehicle, disconnect additional 2 fluid hoses from radiator.
   Place some container under radiator to receive A/T fluid which will flow out when hose is disconnected.
5) Install radiator protection board to between radiator and cooling fan.
6) Remove radiator after removing 2 bolts (1).

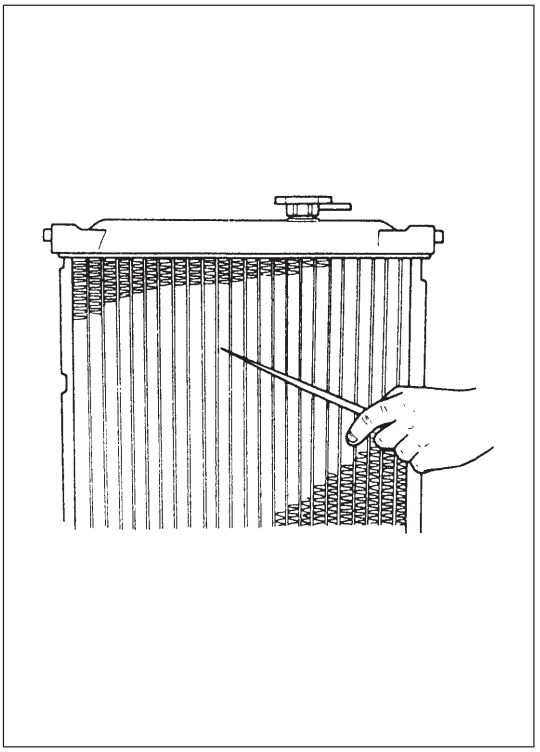

INSPECTION

If the water side of the radiator is found excessively rusted or covered with scales, clean it by flushing with the radiator cleaner compound.
This flushing should be carried out at regular intervals for scale or rust formation advances with time even where a recommended type of coolant is used. Periodical flushing will prove more economical.
Inspect the radiator cores and straighten the flattened or bent fins, if any. Clean the cores, removing road grimes and trashes.
Excessive rust or scale formation on the wet side of the radiator lowers the cooling efficiency.
Flattened or bent fins obstruct the flow of air through the core to impede heat dissipation.

Radiator flushing interval	Two years (recommended)

INSTALLATION

Reverse removal procedures.

NOTE:

- **Refill cooling system with proper coolant referring to COOLANT item of MAINTENANCE.**
- **With automatic transmission car, fill A/T fluid up to specified level. (For procedure to check A/T fluid and its level, refer to SECTION 7B.)**
- **After installation, check each joint for leakage.**

WATER PUMP

REMOVAL

1) Drain cooling system.
   Refer to COOLANT DRAINING in this section.
2) Remove the radiator shroud.
3) Remove radiator. Refer to RADIATOR in this section.

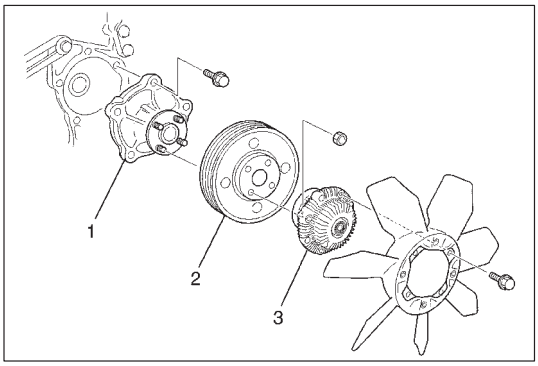

4) Loosen water pump drive belt tension.
   Then remove water pump pulley (2) with fan clutch (3) and pump drive belt.
5) Remove water pump assembly (1).

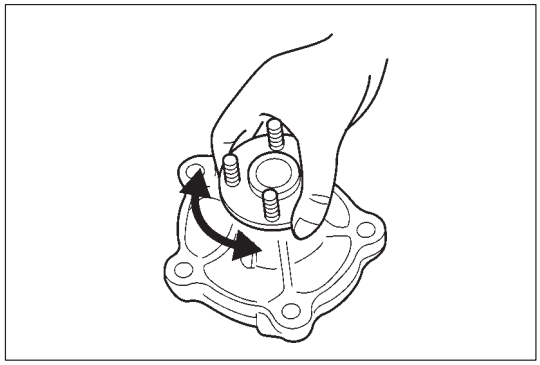

INSPECTION

NOTE:
Do not disassemble water pump.
If any repair is required on pump, replace it as assembly.

- Rotate water pump by hand to check for smooth operation.
  If pump does not rotate smoothly or makes an abnormal noise, replace it.

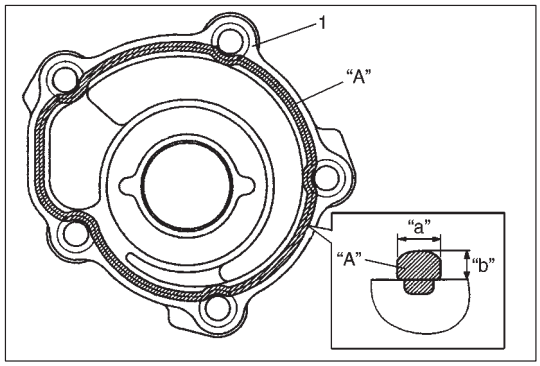

INSTALLATION

1) Apply sealant to water pump.

   "A": Sealant 99000-31150

   Width "a" : 3 mm, 0.12 in.
   Height "b" : 2 mm, 0.08 in.

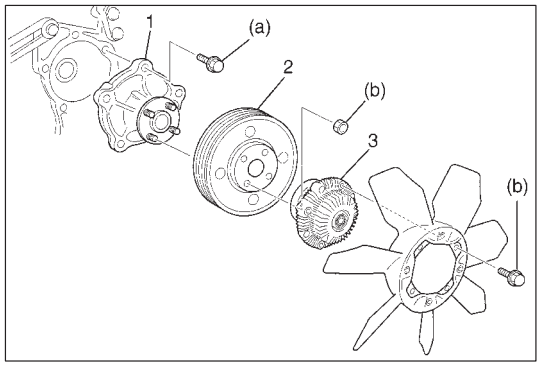

2) Install water pump (1) to cylinder block.

   Tightening Torque
   (a): 23 N·m (2.3 kg-m, 17.0 lb-ft)

3) Install water pump pulley (2) with fan clutch (3).

   Tightening Torque
   (b): 11 N·m (1.1 kg-m, 8.0 lb-ft)

4) Install water pump drive belt, cooling fan and radiator shroud.
5) Adjust water pump belt tension.
   (Refer to p. 6B-11).
6) Connect negative cable at battery.
7) Fill the cooling system.

REQUIRED SERVICE MATERIAL

MATERIALS	RECOMMENDED SUZUKI PRODUCT	USE
Engine coolant (Ethylene glycol base coolant)	Anti-freeze / Anti-corrosion coolant	Additive to engine cooling system for improving cooling efficiency and for protection against rusting.
Sealant	Sealant 1207C 99000-31150	Apply to water pump mating surfaces.

SECTION 6C

ENGINE FUEL

NOTE:
For the descriptions (items) not found in this section, refer to the same section of the Service Manual mentioned in FOREWORD of this manual.

FUEL SYSTEM

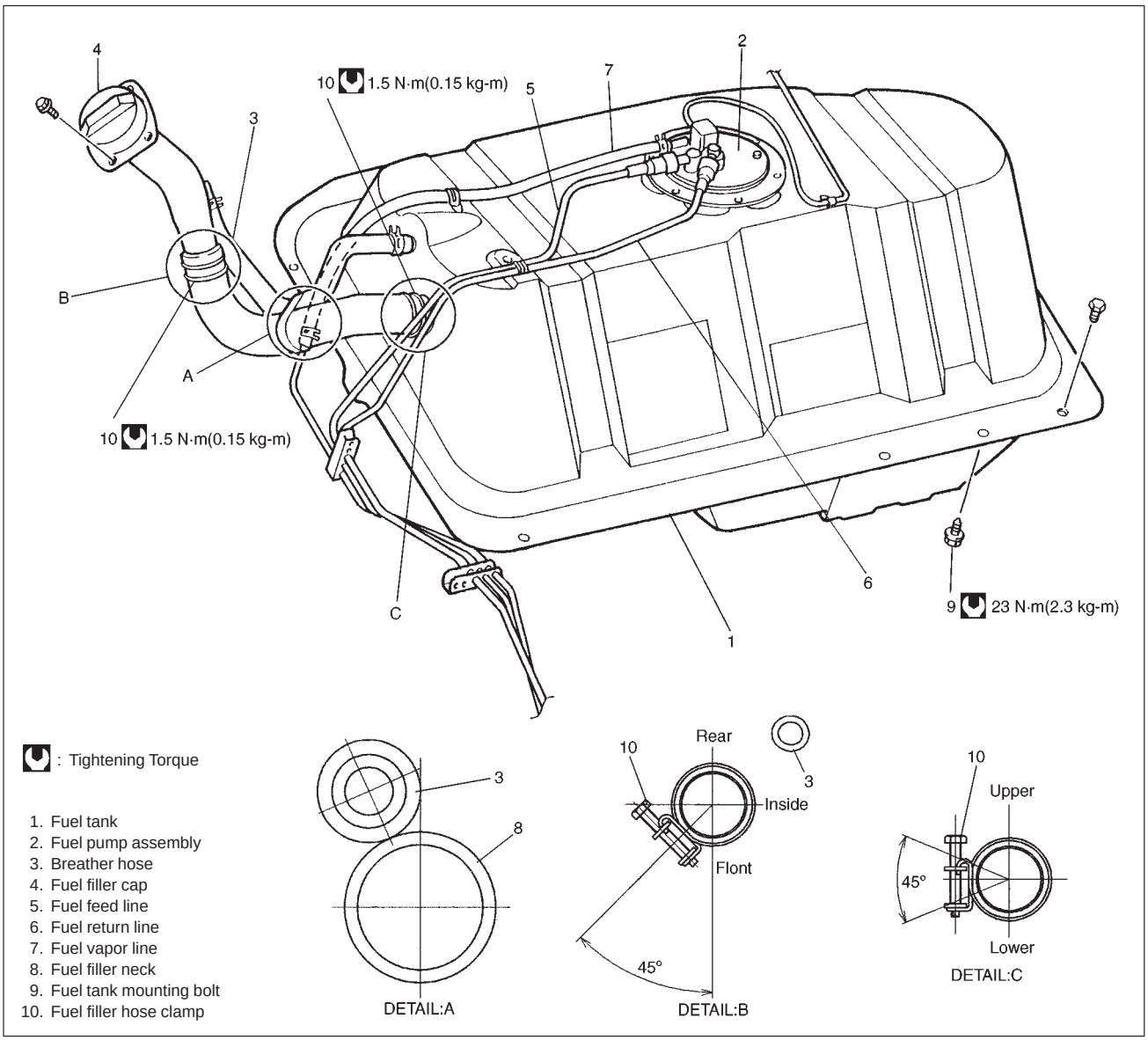

CAUTION:
AMONG THE CARS OF THIS MODEL, THERE ARE THOSE EQUIPPED WITH A CATALYTIC CONVERTER AND THOSE WITHOUT ONE DEPENDING ON STATUTORY REGULATIONS OF EACH COUNTRY. FOR THOSE WITH A CATALYTIC CONVERTER, BE SURE TO USE UNLEADED FUEL ONLY. USE OF LEADED AND/OR LOW LEAD FUEL CAN RESULT IN ENGINE DAMAGE AND REDUCE THE EFFECTIVENESS OF THE EMISSION CONTROL SYSTEM.

SECTION 6E

ENGINE AND EMISSION CONTROL SYSTEM

WARNING:
For vehicles equipped with Supplemental Restraint (Air Bag) System:

- **Service on and around the air bag system components or wiring must be performed only by an authorized SUZUKI dealer. Refer to "Air Bag System Components and Wiring Location View" under "General Description" in air bag system section in order to confirm whether you are performing service on or near the air bag system components or wiring. Please observe all WARNINGS and "Service Precautions" under "On-Vehicle Service" in air bag system section before performing service on or around the air bag system components or wiring. Failure to follow WARNINGS could result in unintentional activation of the system or could render the system inoperative. Either of these two conditions may result in severe injury.**
- **Technical service work must be started at least 90 seconds after the ignition switch is turned to the "LOCK" position and the negative cable is disconnected from the battery. Otherwise, the system may be activated by reserve energy in the Sensing and Diagnostic Module (SDM).**

NOTE:
Whether following systems (parts) are used in the particular vehicle or not depends on specifications. Be sure to bear this in mind when performing service work.

- **EGR valve**
- **Heated oxygen sensor (s) or CO adjusting resistor**
- **Three way catalytic converter (TWC) and warm up three-way catalytic converter (WU-TWC)**

CONTENTS

GENERAL DESCRIPTION 6E- 2
AIR INTAKE SYSTEM 6E- 6
FUEL DELIVERY SYSTEM 6E- 7
Fuel Pump 6E- 7
ELECTRONIC CONTROL SYSTEM 6E- 8
Engine and Emission Control Input/ Output Table 6E- 9
ECM Input/Output Circuit Diagram 6E-10
DIAGNOSIS . . . . . See Section 6.
ON-VEHICLE SERVICE 6E-15
Accelerator Cable Adjustment 6E-15
Idle Speed/Idle Air Control (IAC) Duty Inspection 6E-15
Idle mixture Inspection/Adjustment 6E-17
AIR INTAKE SYSTEM 6E-18
Throttle Body 6E-18
Idle Air Control Valve 6E-21
FUEL DELIVERY SYSTEM 6E-22
Fuel Pressure Inspection 6E-22
Fuel Pump 6E-23
Fuel Pressure Regulator 6E-24
Fuel Injector 6E-25
ELECTRONIC CONTROL SYSTEM 6E-29
ECM 6E-29
MAP Sensor 6E-29
TP Sensor 6E-30
IAT Sensor 6E-31
ECT Sensor 6E-32
Heated Oxygen Sensor -1 and -2 . . . . . 6E-33
Camshaft Position Sensor 6E-34
Crankshaft Position Sensor 6E-35
Vehicle Speed Sensor 6E-35
Fuel Level Sensor (gauge) 6E-35
Knock Sensor 6E-35
Main Relay, Fuel Pump Relay and A/C condenser Fan Control Relay 6E-36
Fuel Cut Operation 6E-36
A/C condenser Fan Control System 6E-37
Output Signals of Throttle Valve Opening and Engine Coolant Temp. 6E-37

EMISSION CONTROL SYSTEM 6E-39
EGR System 6E-39
EVAP Control System 6E-41
PCV System 6E-43
SPECIAL TOOLS 6E-44
TIGHTENING TORQUE SPECIFICATIONS 6E-44

GENERAL DESCRIPTION

The engine and emission control system is divided into 4 major sub-systems: air intake system, fuel delivery system, electronic control system and emission control system.

Air intake system includes air cleaner, throttle body, IAC valve and intake manifold.

Fuel delivery system includes fuel pump, delivery pipe, fuel pressure regulator, etc. Electronic control system includes ECM, various sensors and controlled devices.

Emission control system includes EGR, EVAP and PCV system.

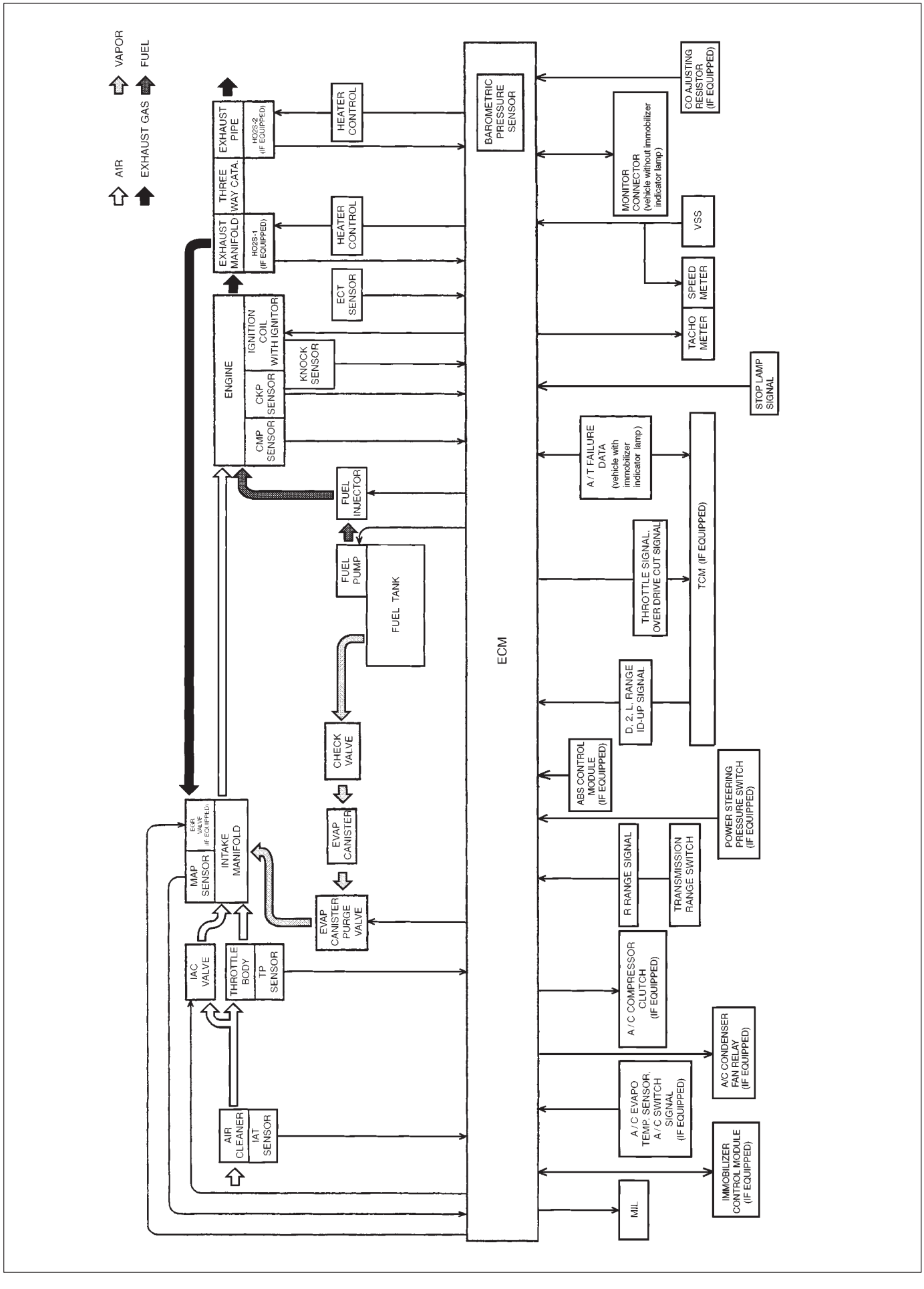
AIR
EXHAUST GAS
VAPOR
FUEL
EXHAUST MANIFOLD
HO2S-1 (IF EQUIPPED)
THREE WAY CATA.
EXHAUST PIPE
HO2S-2 (IF EQUIPPED)
HEATER CONTROL
HEATER CONTROL
ECT SENSOR
ENGINE
CMP SENSOR
CKP SENSOR
IGNITION COIL WITH IGNITOR
KNOCK SENSOR
FUEL INJECTOR
FUEL PUMP
FUEL TANK
CHECK VALVE
EVAP CANISTER
EVAP CANISTER PURGE VALVE
MAP SENSOR
EGR VALVE (IF EQUIPPED)
INTAKE MANIFOLD
IAC VALVE
THROTTLE BODY
TP SENSOR
AIR CLEANER
IAT SENSOR
BAROMETRIC PRESSURE SENSOR
ECM
MONITOR CONNECTOR (vehicle without immobilizer indicator lamp)
CO ADJUSTING RESISTOR (IF EQUIPPED)
VSS
SPEED METER
TACHO METER
STOP LAMP SIGNAL
A/T FAILURE DATA (vehicle with immobilizer indicator lamp)
THROTTLE SIGNAL, OVER DRIVE CUT SIGNAL
TCM (IF EQUIPPED)
D, 2, L, RANGE ID-UP SIGNAL
ABS CONTROL MODULE (IF EQUIPPED)
POWER STEERING PRESSURE SWITCH (IF EQUIPPED)
R RANGE SIGNAL
TRANSMISSION RANGE SWITCH
A/C COMPRESSOR CLUTCH (IF EQUIPPED)
A/C CONDENSER FAN RELAY (IF EQUIPPED)
A/C EVAPO TEMP. SENSOR, A/C SWITCH SIGNAL (IF EQUIPPED)
IMMOBILIZER CONTROL MODULE (IF EQUIPPED)
MIL

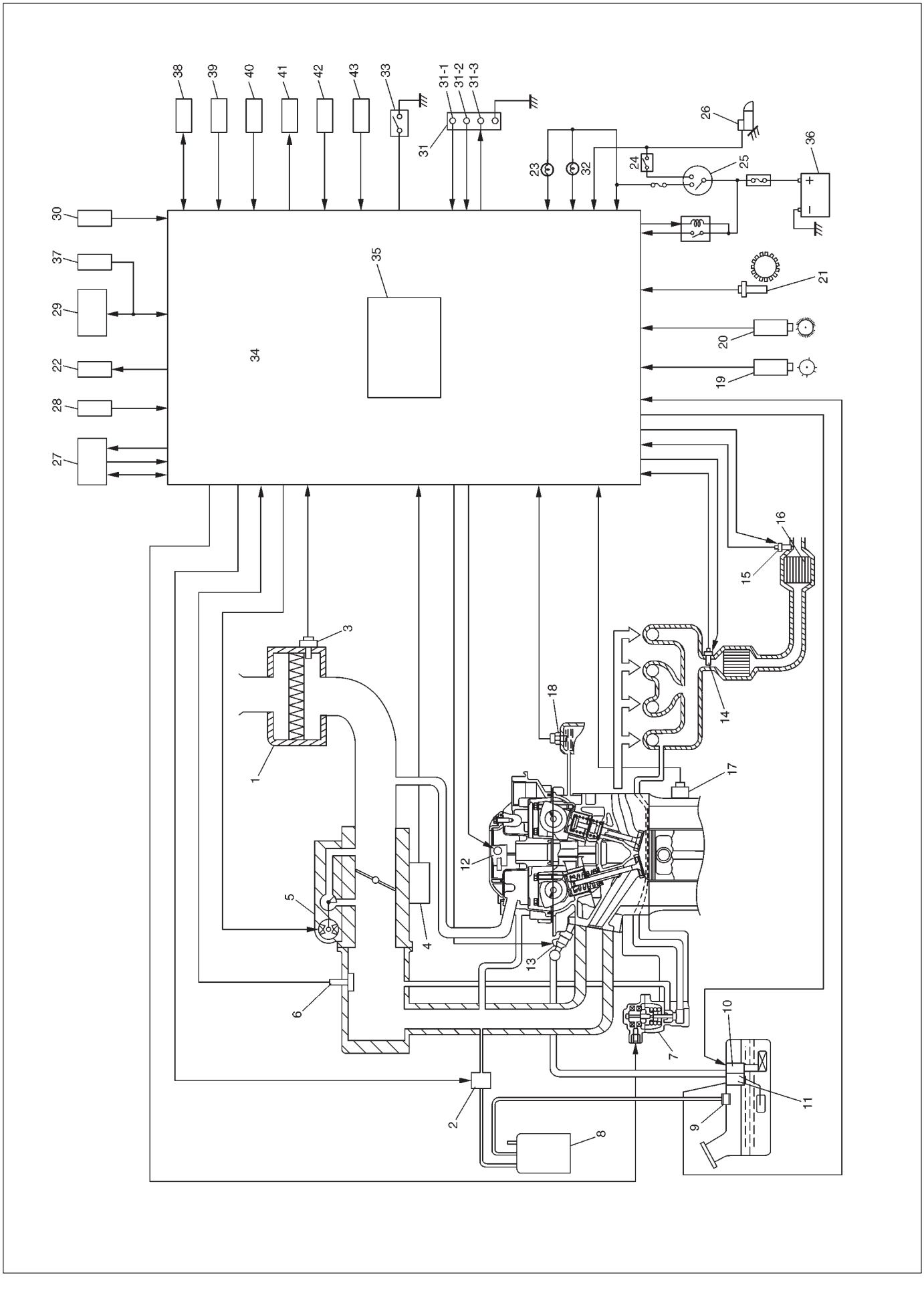
38
39
40
41
42
43
33
31-1
31-2
31-3
31
26
23
32
24
25
36
30
37
29
22
28
27
34
35
21
20
19
16
15
3
18
14
1
17
12
5
4
13
6
10
7
11
2
9
8

1. Air Cleaner
2. EVAP canister purge valve
3. IAT sensor
4. TP sensor
5. IAC valve
6. MAP sensor
7. EGR valve (if equipped)
8. EVAP canister
9. Tank pressure control valve (built-in fuel pump)
10. Fuel pump
11. Fuel level sensor
12. Ignition coil assembly
13. Fuel injector
14. Heated Oxygen Sensor (HO2S)-1 (if equipped)
15. Heated Oxygen Sensor (HO2S)-2 (if equipped)
16. Three way catalytic convertor (if equipped)
17. Knock sensor
18. ECT sensor
19. CMP sensor
20. CKP sensor
21. VSS
22. A/C condenser fan (if equipped)
23. Malfunction indicator lamp in combination meter
24. Park/Neutral position switch in TR switch (A/T)
25. Ignition switch
26. Starter magnetic switch
27. TCM (A/T)
28. Transmission range switch (A/T)
29. DLC
30. Electric load
31. Monitor connector (if equipped)

31-1. Diagnosis switch terminal (vehicle w/o immobilizer indicator lamp)
31-2. Test switch terminal (vehicle w/o immobilizer indicator lamp)
31-3. Duty output terminal (vehicle w/o immobilizer indicator lamp)
32. Immobilizer indicator lamp (if equipped)
33. Stop lamp switch
34. ECM
35. Barometric pressure sensor (vehicle with immobilizer indicator lamp)
36. Battery
37. Immobilizer control module (if equipped)
38. ABS control module (if equipped)
39. CO adjusting resistor (if equipped)
40. Power steering pressure switch (if equipped)
41. A/C compressor clutch (if equipped)
42. A/C EVAP TEMP. sensor (if equipped)
43. A/C switch (if equipped)

AIR INTAKE SYSTEM

The main components of the air intake system are air cleaner (1), air cleaner outlet hose (2), throttle body (3), idle air control valve (4) and intake manifold (5).
The air (by the amount corresponding to the throttle valve (6) opening and engine speed) is filtered by the air cleaner (1), passes through the throttle body (3), is distributed by the intake manifold (5) and finally drawn into each combustion chamber.
When the idle air control valve (4) is opened according to the signal from ECM, the air (7) bypasses the throttle valve (6) through bypass passage and is finally drawn into the intake manifold (5).

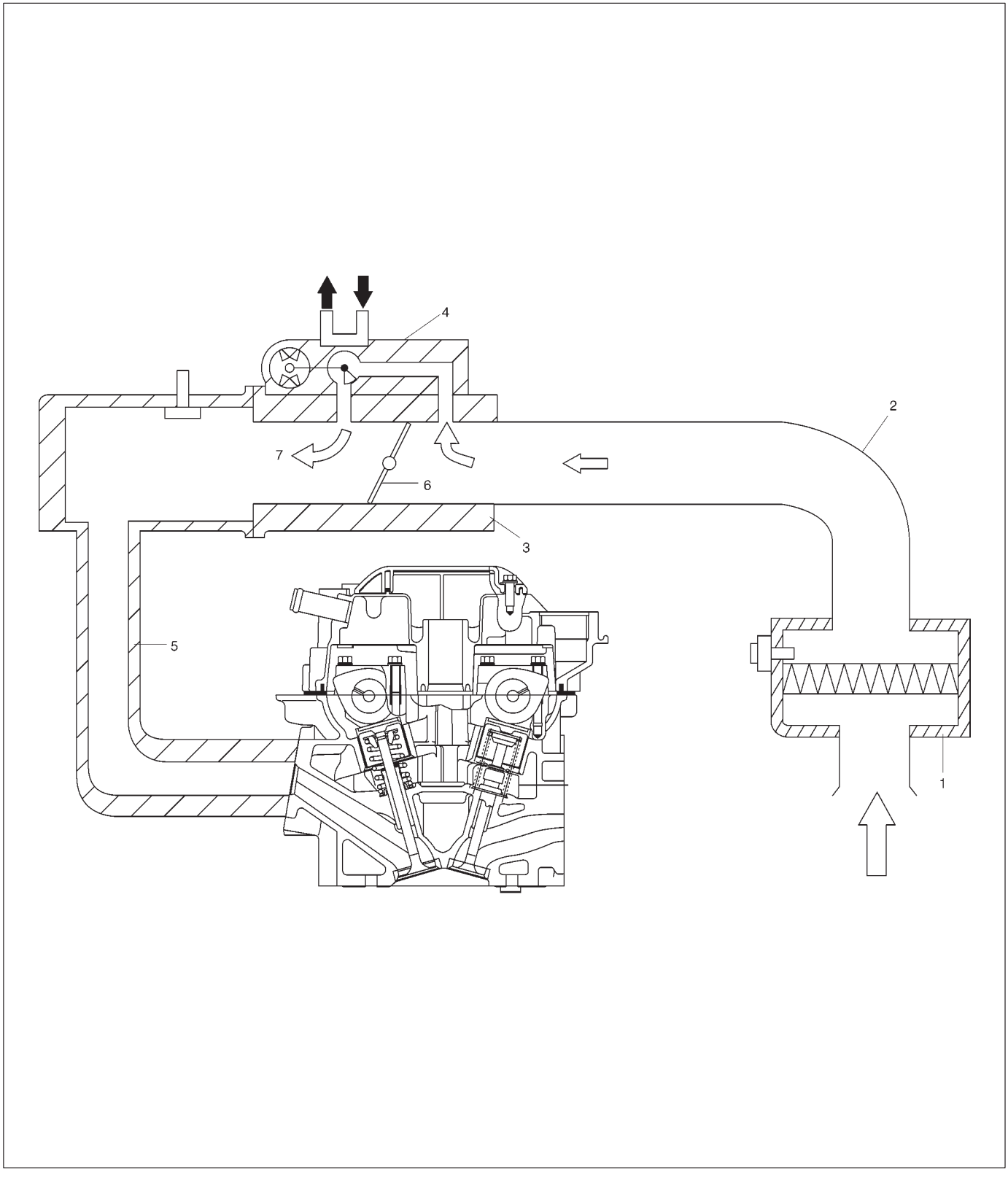

FUEL DELIVERY SYSTEM

The fuel delivery system consists of the fuel tank (1), fuel pump (2), fuel filter (3), fuel pressure regulator (11), delivery pipe (9) and fuel injectors (10).
The fuel in the fuel tank is pumped up by the fuel pump, filtered by the fuel filter and fed under pressure to each injector through the delivery pipe.
As the fuel pressure applied to the injector (the fuel pressure in the fuel feed line) is always kept a certain amount higher than the pressure in the intake manifold by the fuel pressure regulator, the fuel is injected into the intake port of the cylinder head when the injector open according to the injection signal from ECM.
The fuel relieved by the fuel pressure regulator returns through the fuel return line (8) to the fuel tank.

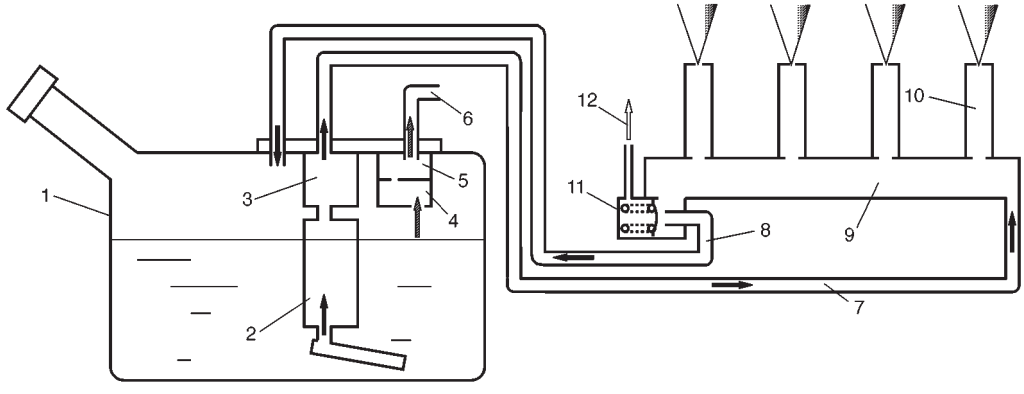

1. Fuel tank
2. Fuel pump
3. Fuel filter
4. Fuel cut valve
5. Fuel tank pressure control valve
6. To EVAP canister
7. Fuel feed line
8. Fuel return line
9. Fuel delivery pipe
10. Fuel injector
11. Fuel pressure regulator
12. To intake manifold (vacuum passage)

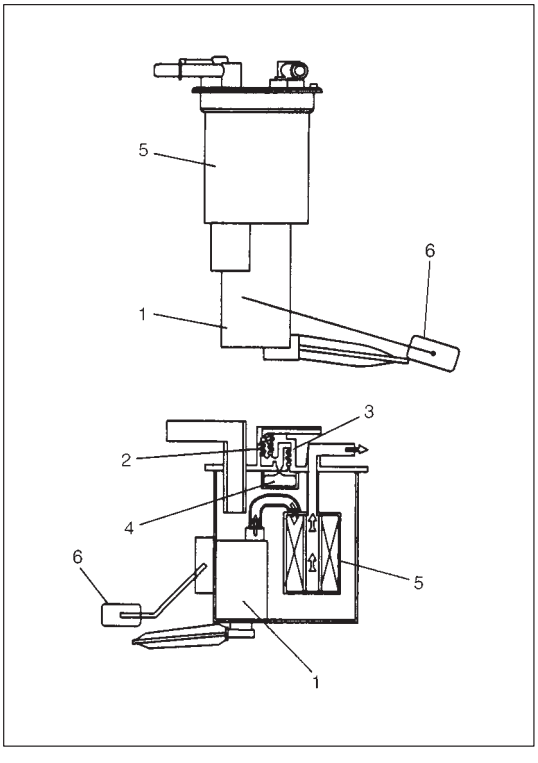

FUEL PUMP

An in-tank type electric pump has been adopted for the fuel pump (1). Incorporated in the pump assembly are;

- Tank pressure control valve (2) which keeps the pressure in the fuel tank constant, and prevents the fuel from spouting and tank itself from being deformed.
- Relief valve (3) which prevents the pressure in tank from rising excessively.
- Fuel cut valve (4) which closes as the float rises so that the fuel will not enter the canister when the fuel level in the tank rises high depending on the fuel level in the tank and the vehicle tilt angle.

Also, a fuel filter (5) is included and a fuel level gauge (6) is attached.

ELECTRONIC CONTROL SYSTEM

The electronic control system consists of 1) various sensors which detect the state of engine and driving conditions, 2) ECM which controls various devices according to the signals from the sensors and 3) various controlled devices.

Functionally, it is divided into the following sub systems:

- Fuel injection control system
- Idle speed control system
- Fuel pump control system
- A/C control system (if equipped)
- A/C condenser fan control system
- EGR system (if equipped)
- Evaporative emission control system
- Oxygen sensor heater control system
- Ignition control system

Also, with A/T model, ECM sends throttle valve opening signal and over drive cut signal to transmission control module to control A/T.

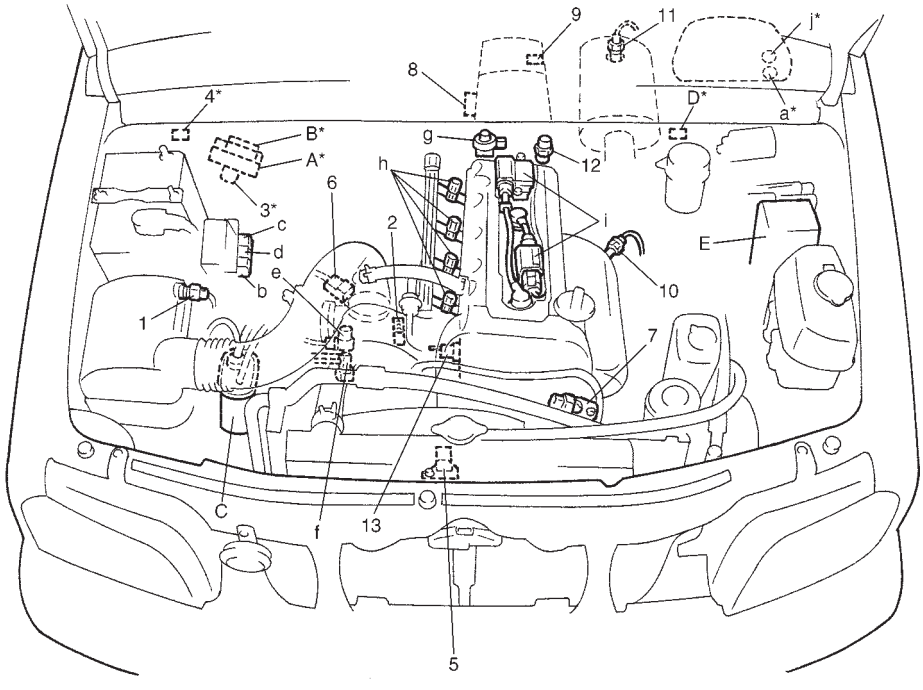

1. IAT sensor
2. TP sensor
3. Monitor connector
4. CO adjusting resistor (if equipped)
5. CKP sensor
6. MAP sensor
7. CMP sensor
8. Transmission range switch
9. VSS
10. HO2S-1 (if equipped)
11. HO2S-2 (if equipped)
12. ECT sensor
13. Knock sensor

a: Immobilizer indicator lamp (if equipped)
b: A/C condenser fan motor relay (if equipped)
c: Main relay
d: Fuel pump relay
e: IAC valve
f: EVAP canister purge valve
g: EGR valve (if equipped)
h: Fuel injector
i: Ignition coil assemblies
j: MIL

A: ECM
B: A/T control module
C: EVAP canister
D: DLC
E: ABS control module (if equipped)

NOTE:
Above figure shows left-hand steering vehicle. For right-hand steering vehicle, parts with (*) are installed at the other side.

ENGINE & EMISSION CONTROL INPUT/OUTPUT TABLE

INPUT \ OUTPUT		ELECTRIC CONTROL DEVICE												
		FUEL PUMP RELAY	FUEL INJECTOR	HO2S HEATER	IAC VALVE	IGNITION COIL WITH IGNITER	EGR VALVE (IF EQUIPPED)	EVAP CANISTER PURGE VALVE	A/C COMPRESSOR CLUTCH	A/C CONDENSER FAN RELAY	MIL	MAIN RELAY	TRANSMISSION CONTROL MODULE
SIGNAL FROM SENSOR, SWITCH AND CONTROL MODULE	DIAGNOSIS SWITCH TERMINAL (VEHICLE WITHOUT IMMOBILIZER INDICATOR LAMP)												
	BAROMETRIC PRESSURE SENSOR (VEHICLE WITH IMMOBILIZER INDICATOR LAMP)												
	STOP LAMP SWITCH												
	STARTER SWITCH												
	IGNITION SWITCH												
	LIGHTING SWITCH												
	REAR DEFOGGER SWITCH (IF EQUIPPED)												
	BLOWER SWITCH												
	A/C SWITCH (IF EQUIPPED)												
	A/C EVAPORATOR TEMP. SENSOR (IF EQUIPPED)												
	VSS												
	HEATED OXYGEN SENSOR-1 (IF EQUIPPED)												
	HEATED OXYGEN SENSOR-2 (IF EQUIPPED)	For detecting deterioration of three way catalytic convertor											
	IAT SENSOR												
	ECT SENSOR												
	TP SENSOR												
	MAP SENSOR												
	CMP SENSOR												
	CKP SENSOR												
	TEST SWITCH TERMINAL (VEHICLE WITHOUT IMMOBILIZER INDICATOR LAMP)												
	KNOCK SENSOR												

ECM INPUT/OUTPUT CIRCUIT DIAGRAM

For TYPE A (See NOTE)

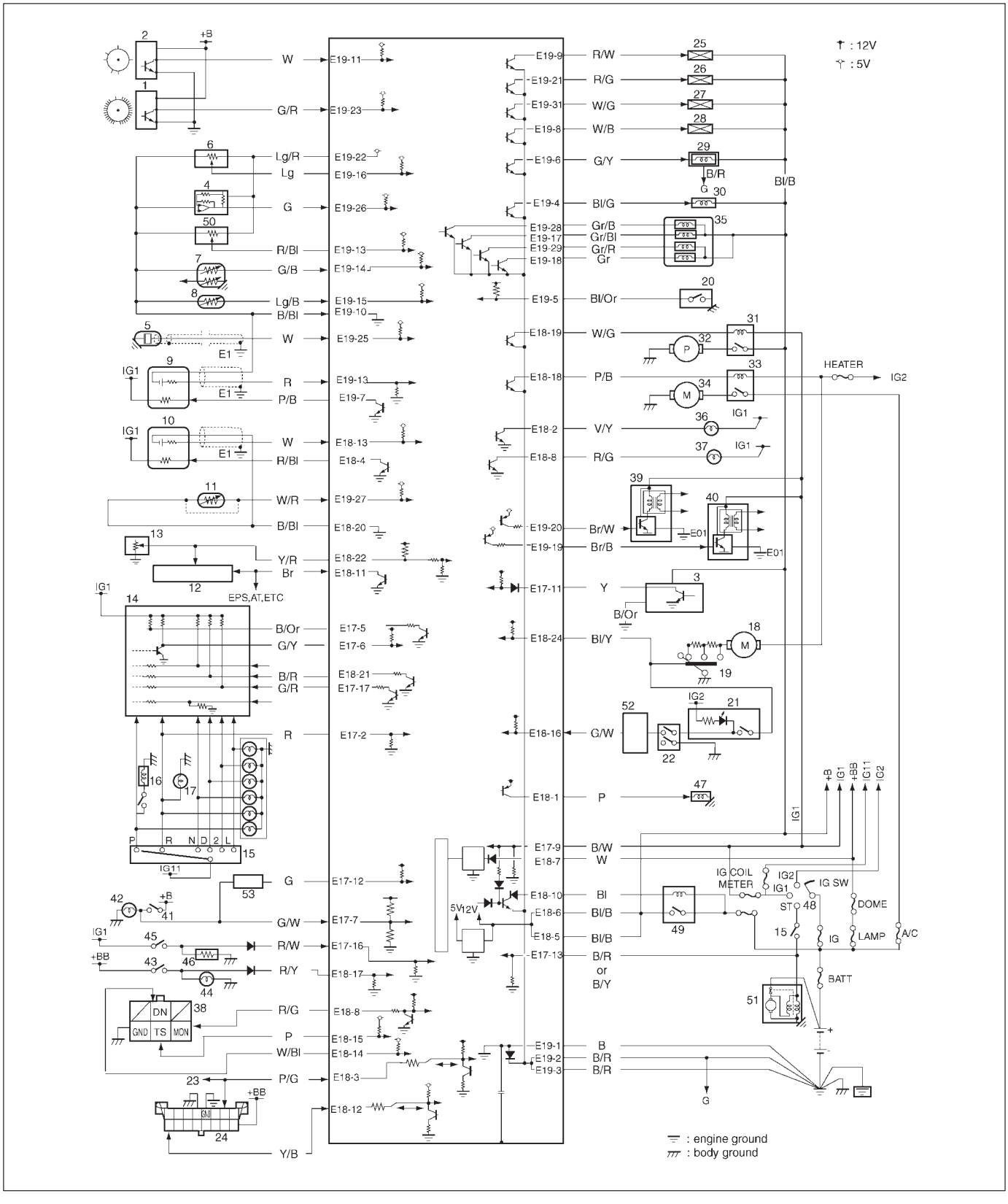

NOTE:

Type A is other than follows.

Type B is left hand steering vehicle equipped with fasten seat belt light and EGR valve or right hand steering vehicle equipped with fasten seat belt light and immobilizer control system.

For TYPE B (See NOTE)

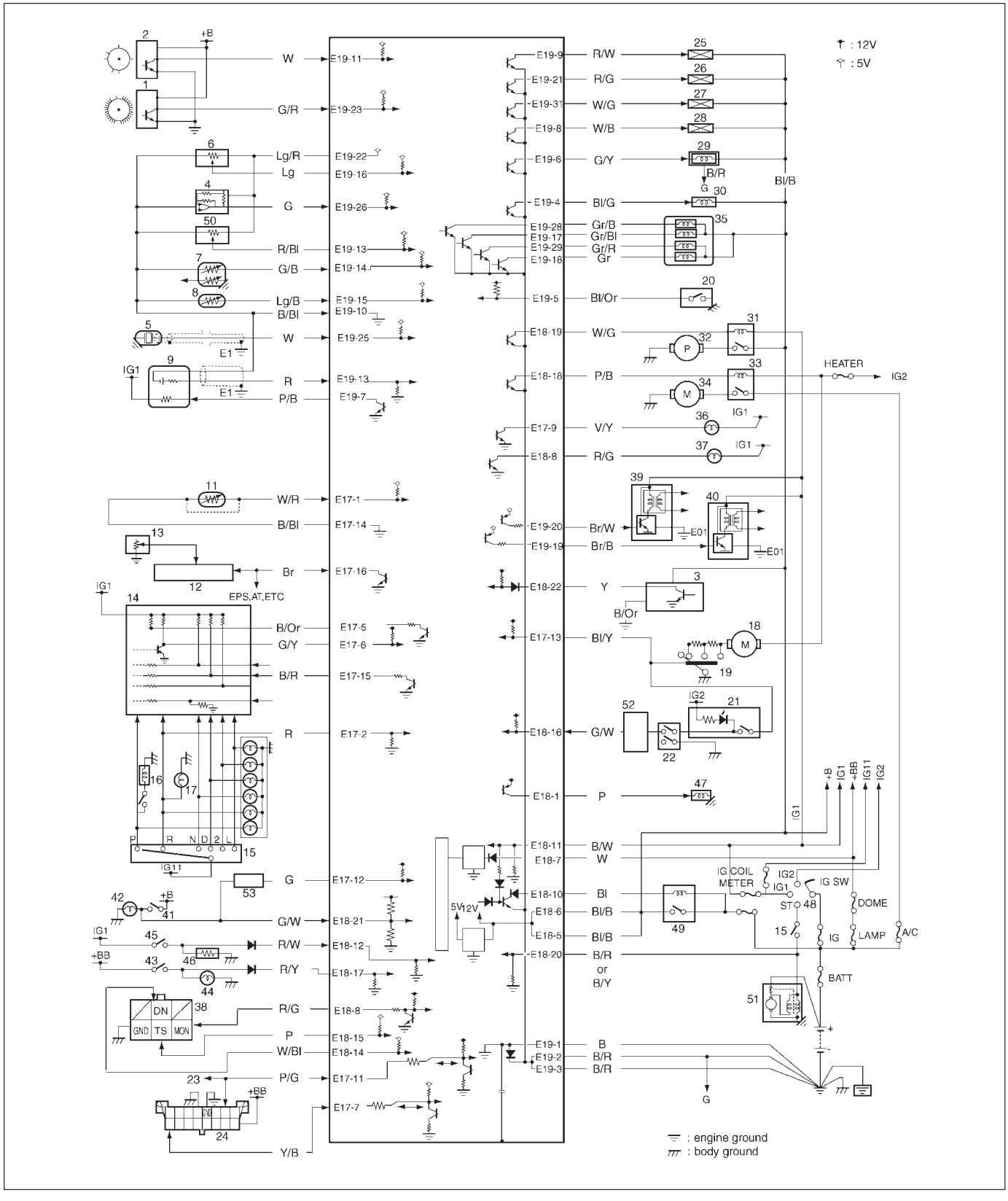

NOTE:

See NOTE in “ECM INPUT/OUTPUT CIRCUIT DIAGRAM” for applicable model.

1. CKP sensor
2. CMP sensor
3. VSS
4. MAP sensor
5. Knock sensor
6. TP sensor
7. ECT sensor
8. IAT sensor
9. Heated oxygen sensor-1 (if equipped)
10. Heated oxygen sensor-2 (if equipped)
11. A/C evaporator temp. sensor (if equipped)
12. Speedometer
13. Fuel level sensor
14. TCM (A/T)
15. Transmission range switch (A/T)
16. Shift lock solenoid (A/T, if equipped)
17. Backup lamp
18. Heater fan motor
19. Heater fan switch
20. Power steering pressure switch (if equipped)
21. A/C switch
22. A/C refrigerant pressure switch (if equipped)
23. Immobilizer control module (if equipped)
24. Data link connector
25. Injector No.1
26. Injector No.2
27. Injector No.3
28. Injector No.4
29. IAC valve
30. EVAP canister purge valve
31. Fuel pump relay
32. Fuel pump
33. A/C condenser fan relay (if equipped)
34. A/C condenser fan motor (if equipped)
35. EGR valve (if equipped)
36. Malfunction indicator lamp
37. Immobilizer indicator lamp (if equipped)
38. Monitor connector (vehicle without immobilizer indicator lamp)
39. Ignition coil assembly (for No.1 and NO.4 spark plugs)
40. Ignition coil assembly (for No.2 and NO.3 spark plugs)
41. Stop lamp switch
42. Stop lamp
43. Lighting switch
44. Position lamp
45. Rear defogger switch (if equipped)
46. Rear defogger (if equipped)
47. A/C compressor clutch (if equipped)
48. Ignition switch
49. Main relay
50. CO adjusting register (if equipped)
51. Starting motor
52. 4WD controller (4WD)
53. ABS control module (if equipped)

ECM TERMINAL ARRANGEMENT TABLE

For TYPE A (See NOTE)

CON-NECTOR	TERMINAL	WIRE COLOR	CIRCUIT
E19	1	B	Ground for ECM
	2	B/R	Ground for drive circuit
	3	B/R	Ground for drive circuit
	4	Bl/G	Canister purge valve
	5	Bl/Or	Power steering pressure switch (if equipped)
	6	G/Y	IAC valve
	7	P/B	Heater of HO2S-1 (if equipped)
	8	W/B	No.4 fuel injector
	9	R/W	No.1 fuel injector
	10	B/Bl	Ground for sensor circuit
	11	W	CMP sensor
	12	——	———
	13	R R/Bl	Heated oxygen sensor-1 (if equipped) CO adjusting resistor (w/o HO2S)
	14	G/B	ECT sensor
	15	Lg/B	IAT sensor
	16	Lg	TP sensor
	17	Gr/Bl	EGR valve (stepper motor coil 3, if equipped)
	18	Gr	EGR valve (stepper motor coil 1, if equipped)
	19	Br/B	IG coil assembly for No.2 and 3 spark plugs
	20	Br/W	IG coil assembly for No.1 and 4 spark plugs
	21	R/G	No.2 fuel injector
	22	Lg/R	Power supply for sensor
	23	G/R	CKP sensor
	24	——	———
	25	W	Knock sensor
	26	G	MAP sensor
	27	W/R	A/C evaporator temp. sensor
	28	Gr/B	EGR valve (stepper motor coil 4, if equipped)
	29	Gr/R	EGR valve (stepper motor coil 2, if equipped)
	30	——	———
	31	W/G	No.3 fuel injector
E18	1	P	A/C compressor clutch (if equipped)
	2	V/Y	Malfunction indicator lamp
	3	P/G	Data link connector (12 V)
	4	R/Bl	Heater of HO2S-2 (if equipped)
	5	Bl/B	Power source
	6	Bl/B	Power source

CON-NECTOR	TERMINAL	WIRE COLOR	CIRCUIT
E18	7	W	Backup power source
	8	R/G	Immobilizer indicator lamp (if equipped) Duty output terminal (vehicle without immobilizer indicator lamp)
	9	——	———
	10	Bl	Main relay
	11	Br	Tachometer
	12	Y/B	Data link connector (5 V)
	13	W	Heated oxygen sensor-2 (if equipped)
	14	W/Bl	Diagnosis switch terminal (vehicle without immobilizer indicator lamp)
	15	P	Test switch terminal (vehicle without immobilizer indicator lamp)
	16	G/W	A/C SW signal (if equipped)
	17	R/Y	Lighting switch
	18	P/B	A/C condenser fan relay (if equipped)
	19	W/G	Fuel pump relay
	20	B/Bl	Ground for sensor
	21	B/R	Throttle opening signal output for A/T (A/T)
	22	Y/R	Fuel level gauge (vehicle with immobilizer indicator lamp)
	23	——	———
	24	Bl/Y	Heater blower switch
E17	1	——	———
	2	R	R-range signal (A/T)
	3	——	———
	4	——	———
	5	B/Or	Overdrive cut signal (A/T)
	6	G/Y	D-range idle-up signal (A/T)
	7	G/W	Stop lamp switch
	8	——	———
	9	B/W	Ignition switch
	10	——	———
	11	Y	Vehicle speed sensor
	12	G	ABS signal (if equipped)
	13	B/Y (M/T) B/R (A/T)	Engine start signal
	14	——	———
	15	——	———
	16	R/W	Rear defogger switch (if equipped)
	17	G/R	A/T failure signal (A/T) (vehicle with immobilizer indicator lamp)

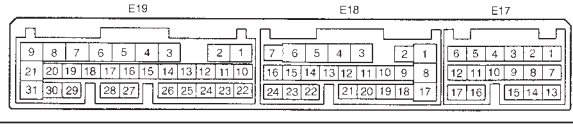

NOTE:

See NOTE in "ECM INPUT/OUTPUT CIRCUIT DIAGRAM" for applicable model.

For TYPE B (See NOTE)

CON-NECTOR	TERMINAL	WIRE COLOR	CIRCUIT
E19	1	B	Ground for ECM
	2	B/R	Ground for drive circuit
	3	B/R	Ground for drive circuit
	4	Bl/G	Canister purge valve
	5	Bl/Or	Power steering pressure switch (if equipped)
	6	G/Y	IAC valve
	7	P/B	Heater of HO2S-1 (if equipped)
	8	W/B	No.4 fuel injector
	9	R/W	No.1 fuel injector
	10	B/Bl	Ground for sensor circuit
	11	W	CMP sensor
	12	——	———
	13	R R/Bl	Heated oxygen sensor-1 (if equipped) CO adjusting resistor (w/o HO2S)
	14	G/B	ECT sensor
	15	Lg/B	IAT sensor
	16	Lg	TP sensor
	17	Gr/Bl	EGR valve (stepper motor coil 3, if equipped)
	18	Gr	EGR valve (stepper motor coil 1, if equipped)
	19	Br/B	IG coil assembly for No.2 and 3 spark plugs
	20	Br/W	IG coil assembly for No.1 and 4 spark plugs
	21	R/G	No.2 fuel injector
	22	Lg/R	Power supply for sensor
	23	G/R	CKP sensor
	24	——	———
	25	W	Knock sensor
	26	G	MAP sensor
	27	——	———
	28	Gr/B	EGR valve (stepper motor coil 4, if equipped)
	29	Gr/R	EGR valve (stepper motor coil 2, if equipped)
	30	——	———
	31	W/G	No.3 fuel injector
E18	1	P	A/C compressor clutch (if equipped)
	2	——	———
	3	——	———
	4	R/Bl	Heater of HO2S-2 (if equipped)
	5	Bl/B	Power source
	6	Bl/B	Power source

CON-NECTOR	TERMINAL	WIRE COLOR	CIRCUIT
E18	7	W	Backup power source
	8	R/G	Immobilizer indicator lamp (if equipped) Duty output terminal (vehicle without immobilizer indicator lamp)
	9	——	———
	10	Bl	Main relay
	11	B/W	Ignition switch
	12	R/W	Rear defogger switch
	13	——	———
	14	W/Bl	Diagnosis switch terminal (vehicle without immobilizer indicator lamp)
	15	P	Test switch terminal (vehicle without immobilizer indicator lamp)
	16	G/W	A/C SW signal (if equipped)
	17	R/Y	Lighting switch
	18	P/B	A/C condenser fan relay (if equipped)
	19	W/G	Fuel pump relay
	20	B/Y (M/T) B/R (A/T)	Engine start signal
	21	G/W	Stop lamp switch
	22	Y	Vehicle speed sensor
	23	——	———
	24	——	———
E17	1	W/R	A/C evaporator temp. sensor
	2	R	R-range signal (A/T)
	3	——	———
	4	——	———
	5	B/Or	Overdrive cut signal (A/T)
	6	G/Y	D-range idle-up signal (A/T)
	7	Y/B	Data link connector
	8	——	———
	9	V/Y	Malfunction indicator lamp
	10	——	———
	11	P/G	Data link connector (12 V)
	12	G	ABS signal (if equipped)
	13	Bl/Y	Heater blower switch
	14	B/Bl	Ground for sensor
	15	B/R	Throttle opening sensor
	16	Br	Tachometer
	17	——	———

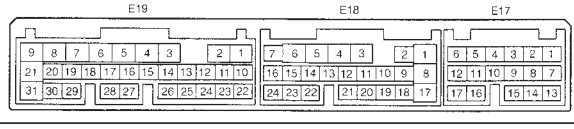

NOTE:

See NOTE in "ECM INPUT/OUTPUT CIRCUIT DIAGRAM" for applicable model.

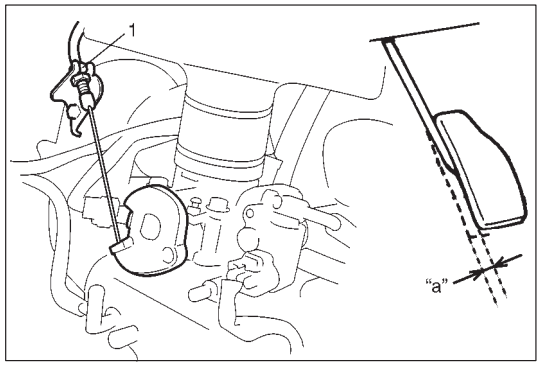

ON-VEHICLE SERVICE

ACCELERATOR CABLE ADJUSTMENT

1) With throttle valve closed, check accelerator pedal play which should be within following specification.

   Pedal play "a": 2 – 7 mm (0.08 – 0.27 in.)

   If measured value is out of specification, adjust it to specification with cable adjusting nut (1).

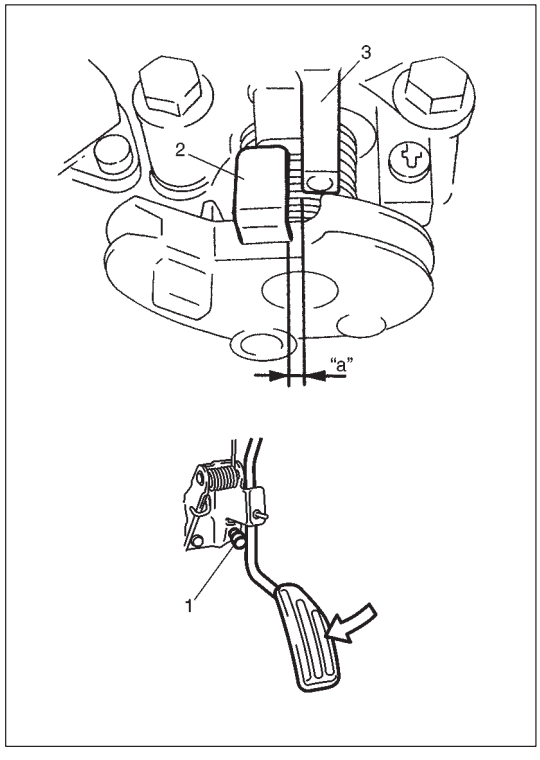

2) With accelerator pedal depressed fully, check clearance between throttle lever (2) and lever stopper (3) (throttle body) which should be within following specification.

   Clearance "a" : 0.5 – 2.0 mm (0.02 – 0.07 in.)
   (With pedal depressed fully)

   If measured value is out of specification, adjust it to specification by changing height of pedal stopper bolt (1).

IDLE SPEED/IDLE AIR CONTROL (IAC) DUTY INSPECTION

Before idle speed/IAC duty check, make sure of the following.

- Lead wires and hoses of Electronic Fuel Injection and engine emission control systems are connected securely.
- Accelerator cable has some play, that is, it is not tight.
- Valve lash is checked and adjusted according to maintenance schedule.
- Ignition timing is within specification.
- All accessories (wipers, heater, lights, A/C, etc.) are out of service.
- Air cleaner has been properly installed and is in good condition.
- No abnormal air inhaling from air intake system.

After above items are all confirmed, check idle speed and IAC duty as follows.

NOTE:
Before starting engine, place transmission gear shift lever in "Neutral" (shift selector lever to "P" range for A/T vehicle), and set parking brake and block drive wheels.

When using SUZUKI scan tool:

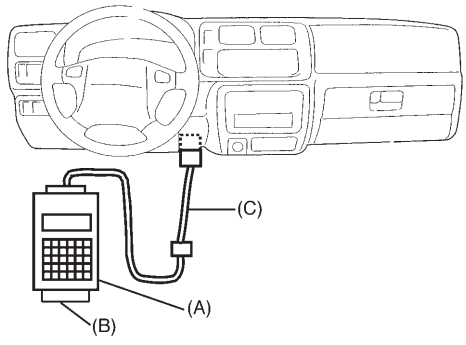

When using duty meter (Vehicle without immobilizer indicator lamp):

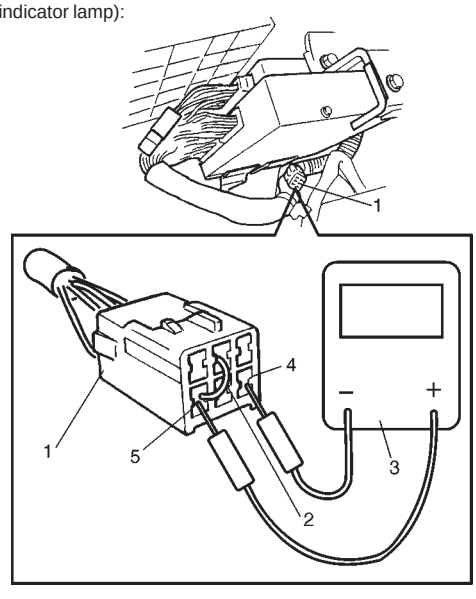

1) Connect SUZUKI scan tool to DLC with ignition switch OFF, if it is available.
2) Warm up engine to normal operating temperature.
3) Check engine idle speed and “IAC duty” as follows:
   When using SUZUKI scan tool:
   a) Select “Data List” mode on scan tool to check “IAC duty”.

   (A): 09931-76011 (SUZUKI scan tool)
   (B): Mass storage cartridge
   (C): 09931-76030 (16/14 pin DLC cable)

   When using duty meter (3) (Vehicle without immobilizer indicator lamp):

   NOTE:
   IAC duty can be checked using monitor connector only for vehicle not equipped with immobilizer indicator lamp.

   a) Set tachometer.
   b) Using service wire (2), ground “Diag. switch terminal” in monitor connector (1) and connect duty meter between “Duty output terminal (4)” and “Ground terminal (5)” of monitor connector (1).

   If duty and/or idle speed is out of specifications, inspect idle air control system referring to Diagnostic Flow Table B-4 IDLE AIR CONTROL SYSTEM CHECK in Section 6.

ENGINE IDLE SPEED AND IAC DUTY		
	A/C OFF	A/C ON
M/T vehicle	700 ± 50 r/min (rpm) 5 – 25%	900 ± 50 r/min (rpm)
A/T vehicle at P/N range	750 ± 50 r/min (rpm) 5 – 25%	900 ± 50 r/min (rpm)

   NOTE:
   Above duty values are ON duty (low voltage rate) meter indications.

4) Remove service wire from monitor connector.
5) Check that specified engine idle speed is obtained with A/C ON if vehicle is equipped with A/C.
   If not, check A/C ON signal circuit and idle air control system.

IDLE MIXTURE INSPECTION/ADJUSTMENT (VEHICLE WITHOUT HEATED OXYGEN SENSOR)

All vehicles not equipped with heated oxygen sensor are shipped with their CO% factory adjusted as follows.

Engine idle mixture (CO %)	0.5 – 1.5 % at specified idle speed

Idle mixture adjustment should never be changed from the original factory setting. However, if during diagnosis, the check indicates idle mixture to be the cause of a driver performance complaint or emission failure, the idle mixture can be adjusted using the following procedures.

NOTE:
For this inspection and adjustment, exhaust gas tester (CO meter) and engine tachometer are necessary.

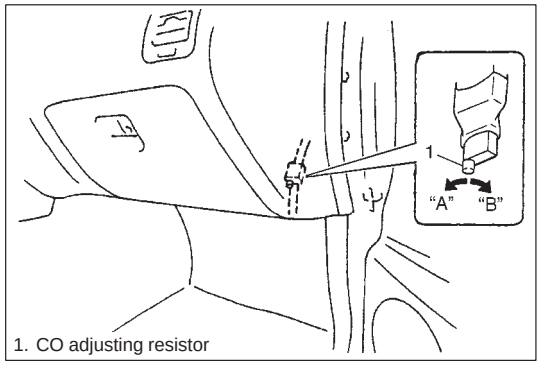

1. CO adjusting resistor

1) Check idle speed according to "Idle Speed Inspection" section.
2) Using exhaust gas tester, check that idle mixture CO% is within above specification. If it is out of specification, adjust it to specification by turning resistor knob.

   NOTE:
   CO adjusting resistor knob to "A" increases CO% (A/F mixture becomes rich) and turning it to "B" decreases CO% (A/F mixture becomes lean).
3) If idle mixture has been adjusted, confirm that idle speed is within specification.

AIR INTAKE SYSTEM

THROTTLE BODY

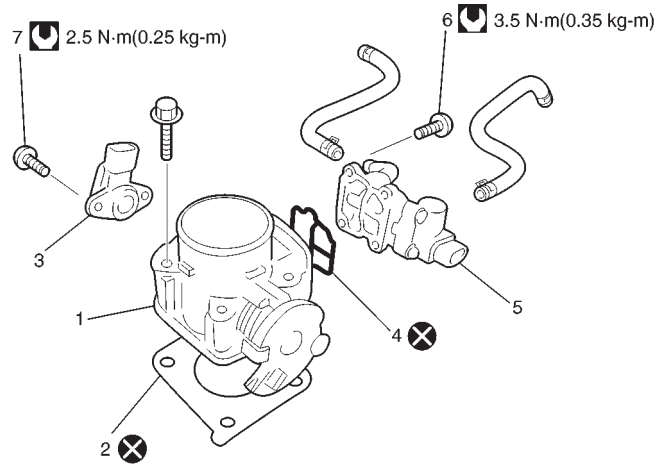

1. Throttle body
2. Throttle body gasket
3. TP sensor
4. Gasket
5. Idle air control valve
6. IAC valve screws
7. TP sensor screws

: Tightening torque
: Do not reuse

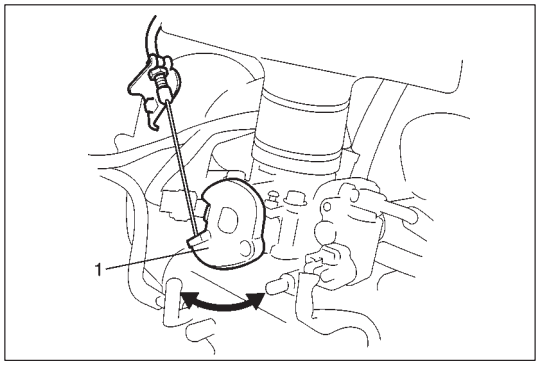

On-Vehicle Inspection

- Check that throttle valve lever (1) moves smoothly.

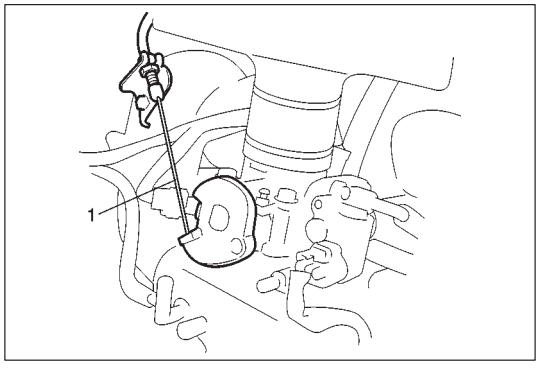

Removal

1) Disconnect negative cable at battery.
2) Drain cooling system.
3) Disconnect accelerator cable (1) from throttle valve lever.

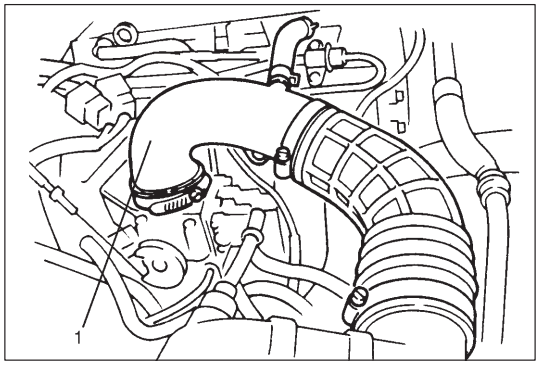

4) Disconnect air cleaner outlet NO.2 hose (1) from throttle body.

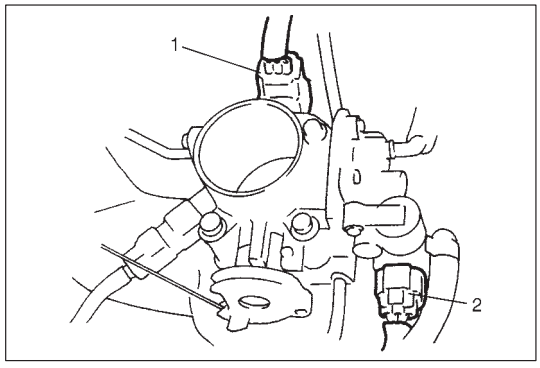

5) Disconnect electric connector from TP sensor (1) and IAC valve (2).
6) Remove throttle body from intake manifold.
7) Disconnect engine coolant hoses from throttle body.

Disassembly

NOTE:
While disassembling and assembling throttle body, use special care not to deform levers on throttle valve shaft or cause damage to any other parts.

1) Remove TP sensor and IAC valve from throttle body.

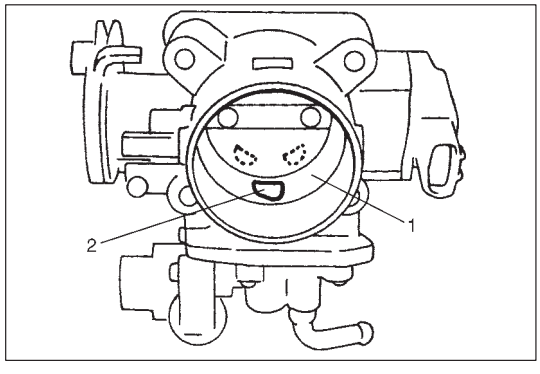

Cleaning

Clean throttle body bore (1) and idle air passage (2) by blowing compressed air.

NOTE:
TP sensor, idle air control valve or other components containing rubber must not be placed in a solvent or cleaner bath. A chemical reaction will cause these parts to swell, harden or get distorted.

Reassembly

1) Install IAC valve to throttle body referring to “IAC valve Installation” section.
2) Install TP sensor to throttle body referring to “TP sensor Installation” section.

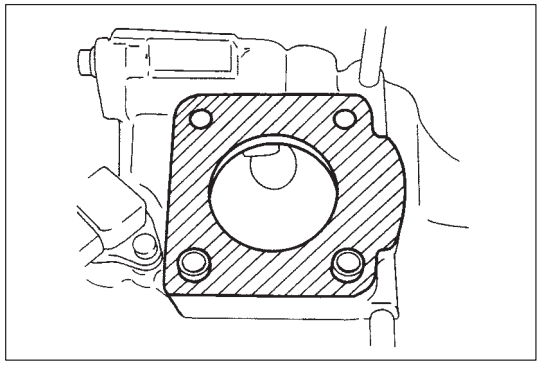

Installation

1) Clean mating surfaces and install throttle body gasket to intake manifold.
   Use new gasket.

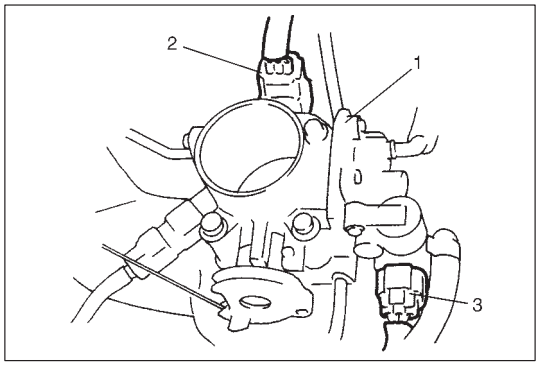

2) Connect engine coolant hoses.
3) Install throttle body (1) to intake manifold.
4) Connect connectors to TP sensor (2) and IAC valve (3) securely.

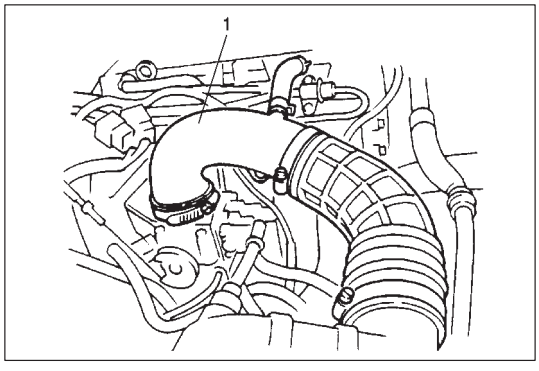

5) Install air cleaner outlet No.2 hose (1) and pipe.
6) Connect accelerator cable and adjust cable play to specification.
7) Refill cooling system.
8) Connect negative cable at battery.

IDLE AIR CONTROL VALVE (IAC VALVE)

Removal

1) Remove throttle body from intake manifold referring to “Throttle Body Removal” section.
2) Remove IAC valve from throttle body.

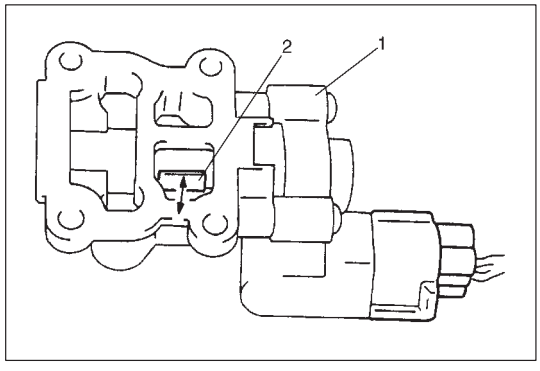

Inspection

1) Connect each connector to IAC valve (1), TP sensor and IAT sensor.
2) Check that rotary valve (2) of IAC valve opens and closes once and then stops in about 60 ms as soon as ignition switch is turned ON.

NOTE:

- **This check should be performed by two people, one person turns on ignition switch while the other checks valve operation.**
- **As valve operation is momentary, it may be overlooked. To prevent this, perform this operation check 3 times or more continuously.**
  If rotary valve of IAC valve does not operate at all, check wire harness for open and short. If wire harness is in good condition, replace IAC valve and recheck.

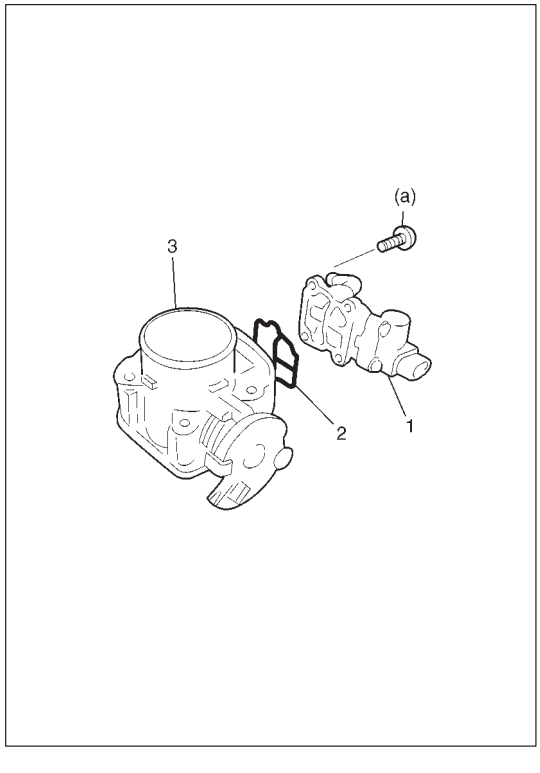

Installation

1) Install new O-ring (2) to IAC valve (1).
2) Install IAC valve (1) to throttle body (3).
   Tighten IAC valve screws to specified torque.

   Tightening Torque
   (a): 3.5 N·m (0.35 kg-m, 2.5 lb-ft)

3) Install throttle body to intake manifold referring to “Throttle Body Installation” section.

FUEL DELIVERY SYSTEM

FUEL PRESSURE INSPECTION

WARNING:
Be sure to perform work in a well-ventilated area and away from any open flames, or there is a risk of a fire breaking out.

1) Relieve fuel pressure in fuel feed line referring to "Fuel Pressure Relief Procedure" in Section 6.
2) Disconnect fuel feed hose from fuel delivery pipe.

CAUTION:
A small amount of fuel may be released when fuel hose is disconnected. Place container under the joint with a shop cloth so that released fuel is caught in container or absorbed in cloth. Place that cloth in an approved container.

3) Connect special tools and hose between fuel delivery pipe and fuel feed hose as shown in figure, and clamp hoses securely to ensure no leaks occur during checking.

Special Tool
(A): 09912-58441
(B): 09912-58431
(C): 09912-58490

4) Check that battery voltage is above 11 V.

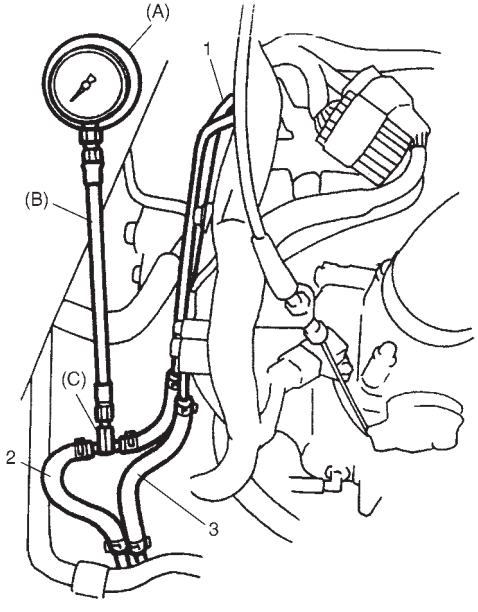

1. Fuel delivery pipe
2. Fuel feed hose
3. Fuel return pipe

CONDITION	FUEL PRESSURE
With fuel pump operating and engine stopped	270 – 310 kPa 2.7 – 3.1 kg/cm^2 38.4 – 44.0 psi
At specified idle speed	210 – 260 kPa 2.1 – 2.6 kg/cm^2 29.8 – 37.0 psi
With 1 min. after engine (fuel pump) stop (Pressure reduces as time passes)	over 200 kPa 2.0 kg/cm^2 28.4 psi

5) Turn ignition switch ON to operate fuel pump and after 2 seconds turn it OFF. Repeat this 3 or 4 times and then check fuel pressure.
6) Start engine and warm it up to normal operating temperature.
7) Measure fuel pressure at idling.

If measured pressure doesn't satisfy specification, refer to "Diagnostic Flow Table B-3" in "Engine Diagnosis" section and check each possibly defective part. Replace if found defective.

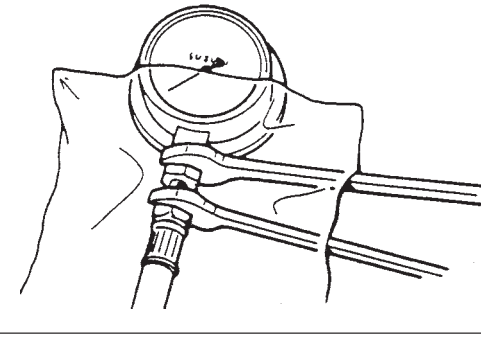

8) After checking fuel pressure, remove fuel pressure gauge.

CAUTION:
As fuel feed line is still under high fuel pressure, make sure to release fuel pressure according to following procedures.
- **Place fuel container under joint.**
- **Cover joint with rag and loosen joint nut slowly to release fuel pressure gradually.**

9) Remove special tools from fuel delivery pipe.
10) Connect fuel feed hose to fuel delivery pipe and clamp it securely.
11) With engine “OFF” and ignition switch “ON”, check for fuel leaks.

FUEL PUMP

On-Vehicle Inspection

CAUTION:
When fuel filler cap is removed in any procedure, work must be done in a well-ventilated area, keep away from any open flames and without smoking.

NOTE:
The fuel pressure regulator is the one body with the fuel pump assembly so individual inspection of it is impossible.

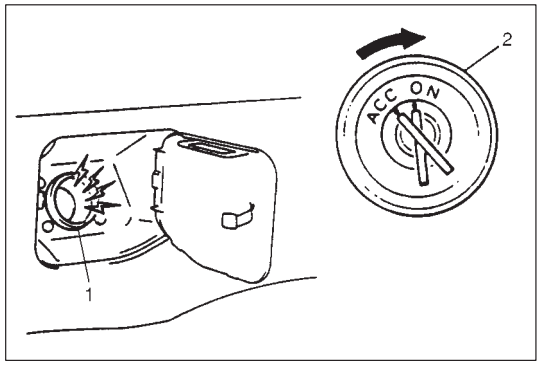

1) Remove filler cap and turn ON ignition switch (2). Then fuel pump operating sound should be heard from fuel filler (1) for about 2 seconds and stop. Be sure to reinstall fuel filler cap after checking.

   If above check result is not satisfactory, advance to “Diagnostic Flow Table B-2”.

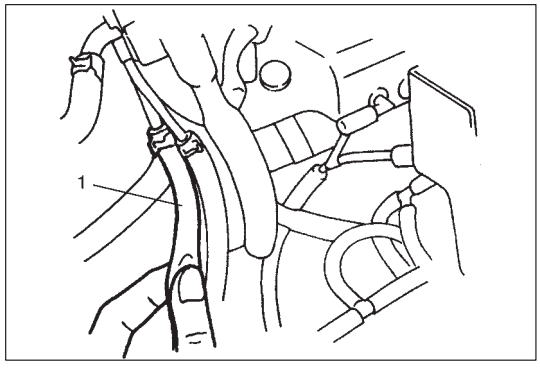

2) Turn OFF ignition switch and leave over 10 minutes as it is.
3) Fuel pressure should be felt at fuel feed hose (1) for 2 seconds after ignition switch ON.

   If fuel pressure is not felt, advance to “Diagnostic Flow Table B-3”.

Removal

Remove fuel tank from body according to procedure described in Section 6C and remove fuel pump from fuel tank.

Inspection

Check fuel pump filter for evidence of dirt and contamination. If present, clean and check for presence of dirt in fuel tank.

Installation

1) Install fuel pump to its bracket.
2) Install fuel pump to fuel tank and then install fuel tank to body according to procedure described in Section 6C.

FUEL PRESSURE REGULATOR

On-Vehicle Inspection

Perform fuel pressure inspection according to procedure described in “Fuel Pressure Inspection”.

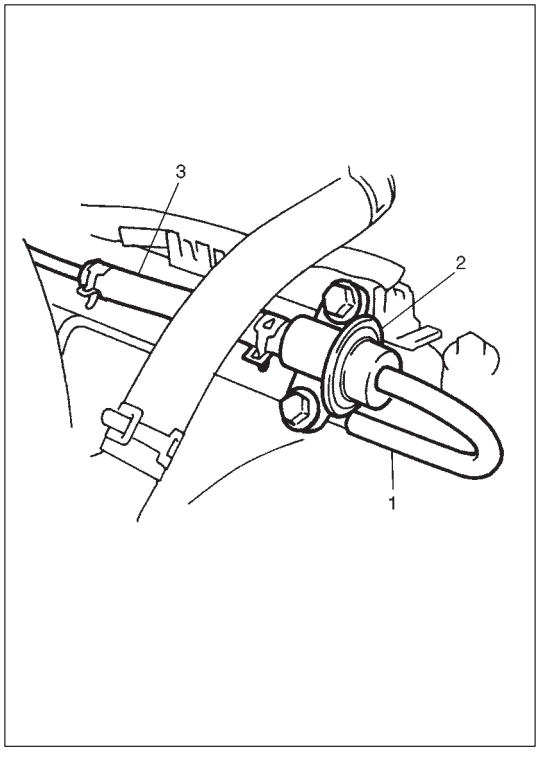

Removal

1) Relieve fuel pressure according to procedure described on Section 6.
2) Disconnect battery negative cable from battery.
3) Disconnect vacuum hose (1) from fuel pressure regulator (2).
4) Remove fuel pressure regulator from fuel delivery pipe.

CAUTION:
A small amount of fuel may be released when it is from delivery pipe.
Place a shop cloth under delivery pipe so that released fuel is absorbed in it.

5) Disconnect fuel return hose (3) from fuel pressure regulator.

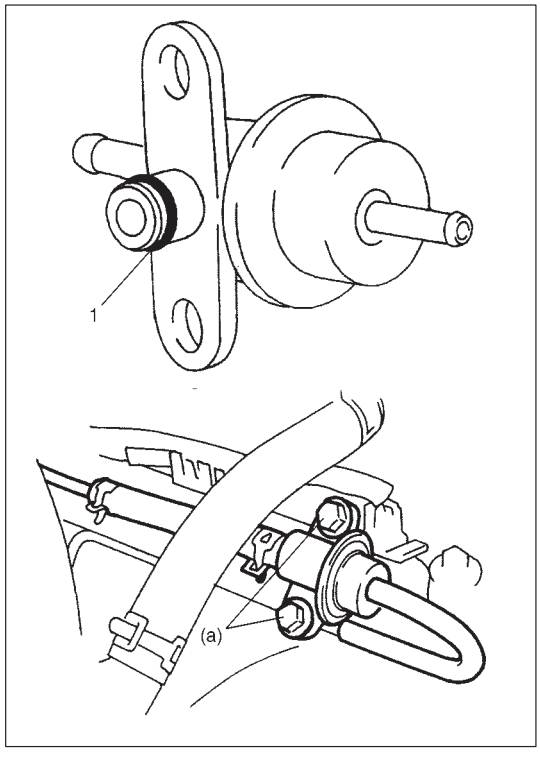

Installation

For installation, reverse removal procedure and note following precautions.

- Use new O-ring (1).
- Apply thin coat of gasoline to O-ring to facilitate installation.
- Tighten fuel pressure regulator bolts to specified torque.

Tightening Torque
(a): 10 N·m (1.0 kg-m, 7.5 lb-ft)

- With engine "OFF" and the ignition switch ON position, check for fuel leaks around fuel line connection.

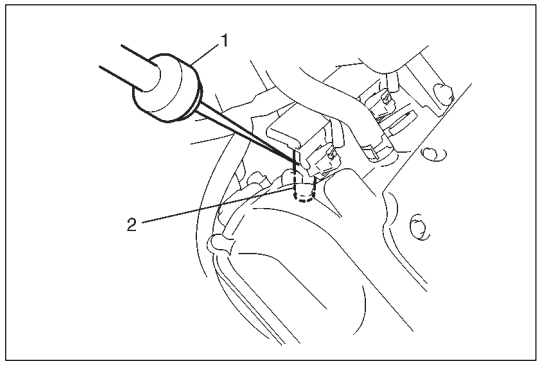

FUEL INJECTOR

On-Vehicle Inspection

1) Using sound scope (1) or such, check operating sound of injector (2) when engine is running or cranking.
   Cycle of operating sound should vary according to engine speed.
   If no sound or an unusual sound is heard, check injector circuit (wire or connector) or injector (2).

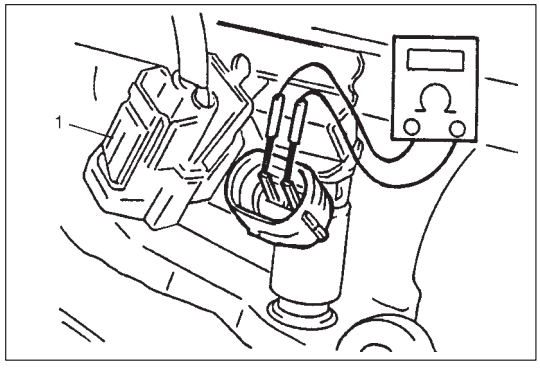

2) Disconnect connector (1) from injector, connect ohmmeter between terminals of injector and check resistance.

   Resistance of injector: 11.3 – 13.8 Ω at 20°C, 68°F

   If resistance is out of specification, replace.
3) Connect connector (1) to injector securely.

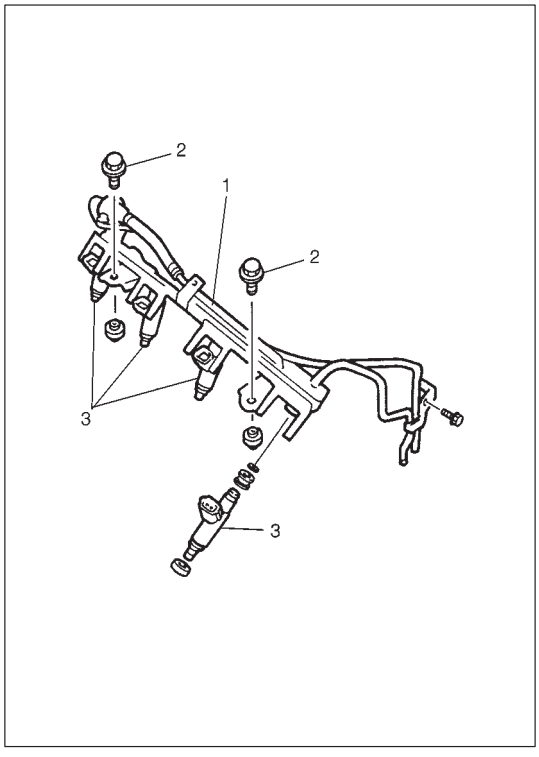

Removal

1) Relieve fuel pressure according to procedure described in Section 6.
2) Disconnect battery negative cable at battery.
3) Disconnect fuel injector couplers and release wire harness from clamps.
4) Remove clamp bolt for fuel feed pipe and return pipe.
5) Remove fuel delivery pipe bolts (2).
6) Remove fuel injector(s) (3).

CAUTION:
A small amount of fuel may come out after removal of fuel injectors, cover them with shop cloth.

Inspection

WARNING:
As fuel is injected in this inspection, perform in a well ventilated area and away from open flames.
Use special care to prevent sparking when connecting and disconnecting test lead to and from battery.

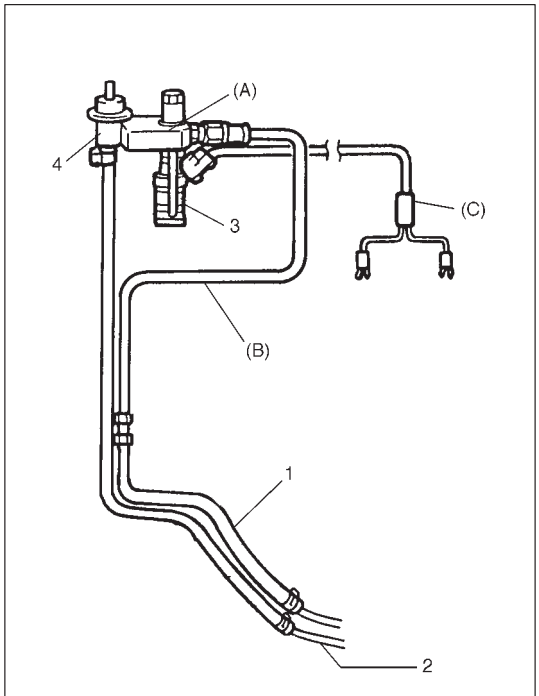

2. Fuel return line

1) Install injector (3) and fuel pressure regulator (4) to special tool (injector checking tool).

   Special Tool
   (A): 09912-58421

2) Connect special tools (hose and attachment) to fuel feed hose (1) of vehicle.

   Special Tool
   (B): 09912-58431

3) Connect special tool (test lead) to injector.

   Special Tool
   (C): 09930-88530

When using SUZUKI scan tool :

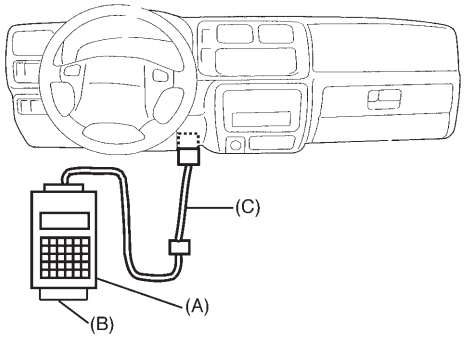

Without using SUZUKI scan tool :

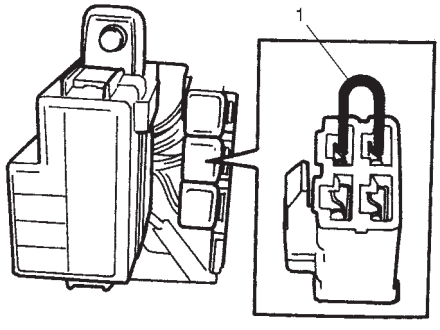

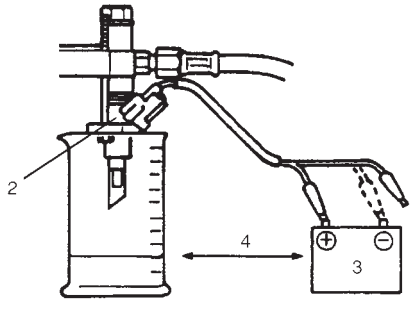

4. Keep as far apart as possible

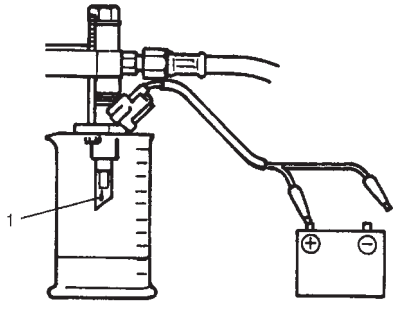

4) Install suitable vinyl tube onto injector nozzle to prevent fuel from splashing out when injecting.
5) Put graduated cylinder under injector as shown.
6) Operate fuel pump and apply fuel pressure to injector as follows:
   When using SUZUKI scan tool :
   a) Connect SUZUKI scan tool to DLC with ignition switch OFF.
   b) Turn ignition switch ON, clear DTC and select "MISC TEST" mode on SUZUKI scan tool.
   c) Turn fuel pump ON by using SUZUKI scan tool.

   (A): 09931-76011 (SUZUKI scan tool)
   (B): Mass storage cartridge
   (C): 09931-76030 (16/14 pin DLC cable)

   Without using SUZUKI scan tool :
   a) Remove fuel pump relay from connector.
   b) Connect two terminals of relay connector using service wire (1) as shown in figure.

   CAUTION:
   Check to make sure that connection is made between correct terminals. Wrong connection can cause damage to ECM, wire harness, etc.

   c) Turn ignition switch ON.
7) Apply battery voltage (3) to injector (2) for 15 seconds and measure injected fuel volume with graduated cylinder.
   Test each injector two or three times.
   If not within specification, replace injector.

   Injected fuel volume:
   43 – 47 cc/15 sec. (1.45/1.51 – 1.58/1.65 US/Imp. oz/15 sec.)

8) Check fuel leakage from injector nozzle. Do not operate injector for this check (but fuel pump should be at work).
   If fuel leaks (1) more than following specifications, replace.

   Fuel leakage (1): Less than 1 drop/min.

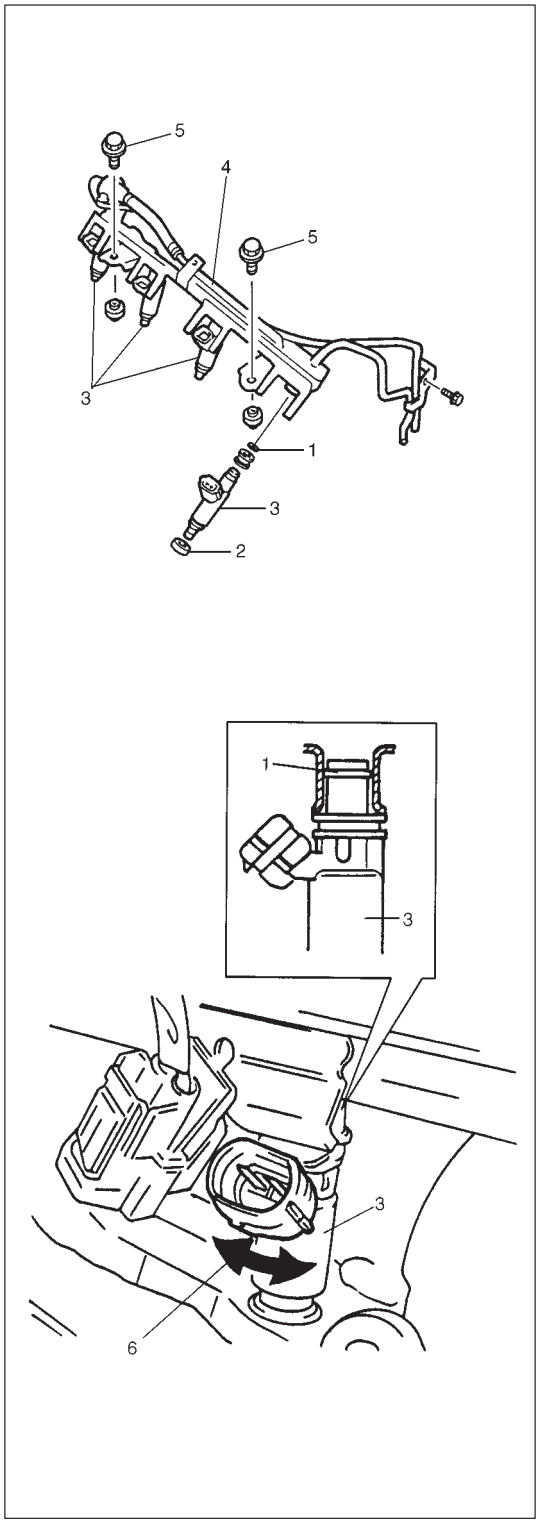

Installation

For installation, reverse removal procedure and note following precautions.

- Replace injector O-ring (1) with new one using care not to damage it.
- Check if cushion (2) is scored or damaged. If it is, replace with new one.
- Apply thin coat of fuel to O-rings (1) and then install injectors (3) into delivery pipe (4) and intake manifold.
  Make sure that injectors (3) rotate smoothly (6). If not, probable cause is incorrect installation of O-ring (1). Replace O-ring (1) with new one.
- Tighten delivery pipe bolts (5) and make sure that injectors (3) rotate smoothly (6).
- After installation, with engine “OFF” and ignition switch “ON”, check for fuel leaks around fuel line connection.

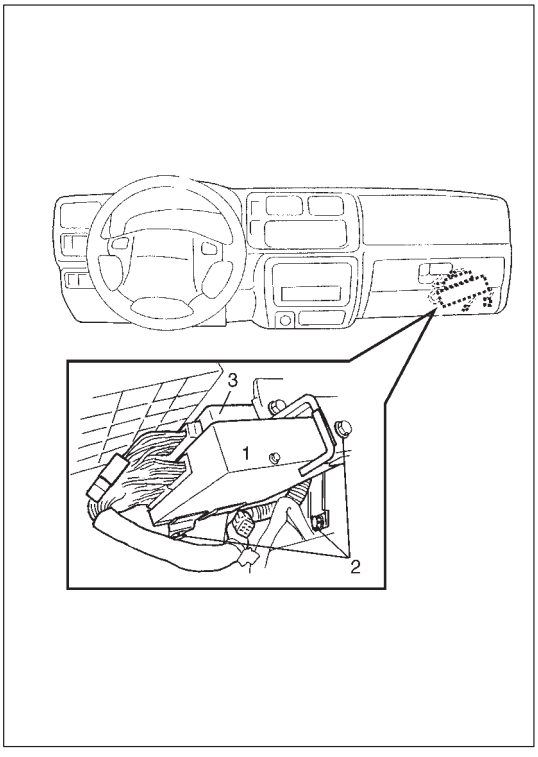

ELECTRONIC CONTROL SYSTEM

ENGINE CONTROL MODULE (ECM)

CAUTION:
As ECM consists of precision parts, be careful not to expose it to excessive shock.

Removal

1) Disconnect battery negative cable at battery.
2) Disable air bag system, refer to “DISABLING THE AIR BAG SYSTEM” in Section 10B if equipped.
3) Remove glove box.
4) Disconnect ECM (1) and TCM (3) (if equipped) connectors.
5) Loosen 2 nuts (2) and remove ECM and TCM (if equipped).

Installation

1) Reverse removal procedure noting the following:

- Connect connectors to ECM and TCM (if equipped) securely.

MANIFOLD ABSOLUTE PRESSURE SENSOR (MAP SENSOR)

Inspection

Check MAP sensor referring to “MAP Sensor Individual Check” in DTC P0105 (No.11) Flow Table. If malfunction is found, replace.

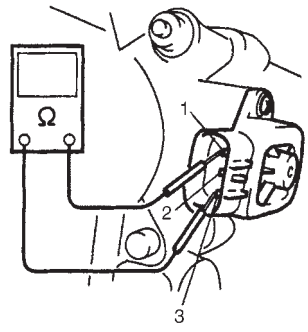

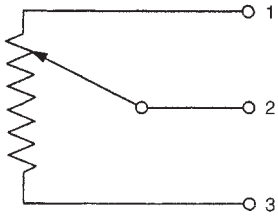

1. Reference voltage terminal
2. Output voltage terminal
3. Ground terminal

THROTTLE POSITION SENSOR (TP SENSOR)

Inspection

1) Disconnect negative cable at battery and connector from TP sensor.
2) Using ohmmeter, check resistance between terminals under each condition given in table below.

TERMINALS	RESISTANCE
Between 1 and 3 terminals	4.0 – 6.0 kΩ
Between 2 and 3 terminals	20.0 Ω – 6.0 kΩ, varying according to throttle valve opening.
NOTE: **There should be more than 2 kΩ resistance difference between when throttle valve is at idle position and when it is fully open.**	

If check result is not satisfactory, replace TP sensor.

3) Connect TP sensor connector securely.
4) Connect negative cable to battery.

Removal

1) Remove throttle body from intake manifold referring to "Throttle Body Removal" section.
2) Remove TP sensor from throttle body.

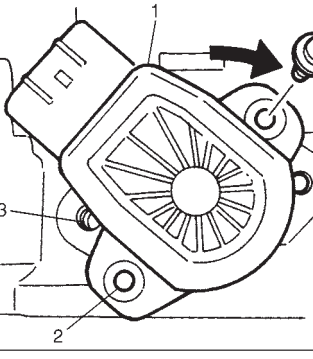

Installation

1) Install TP sensor (1) to throttle body.
   Fit TP sensor to throttle body in such way that its holes (3) are a little away from TP sensor screw holes (2) and turn TP sensor clockwise so that those holes align.

   Tightening Torque
   (a): 2.5 N·m (0.25 kg-m, 1.8 lb-ft)
2) Connect connector to TP sensor securely.
3) Connect battery negative cable to battery.

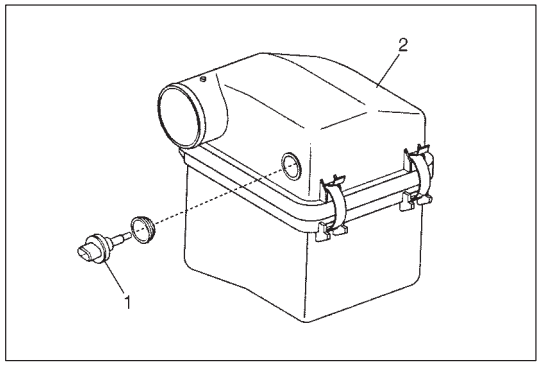

INTAKE AIR TEMPERATURE SENSOR (IAT SENSOR)

Removal

1) Disconnect battery negative cable at battery.
2) Disconnect connector from IAT sensor (1).
3) Remove IAT sensor (1) from air cleaner case (2).

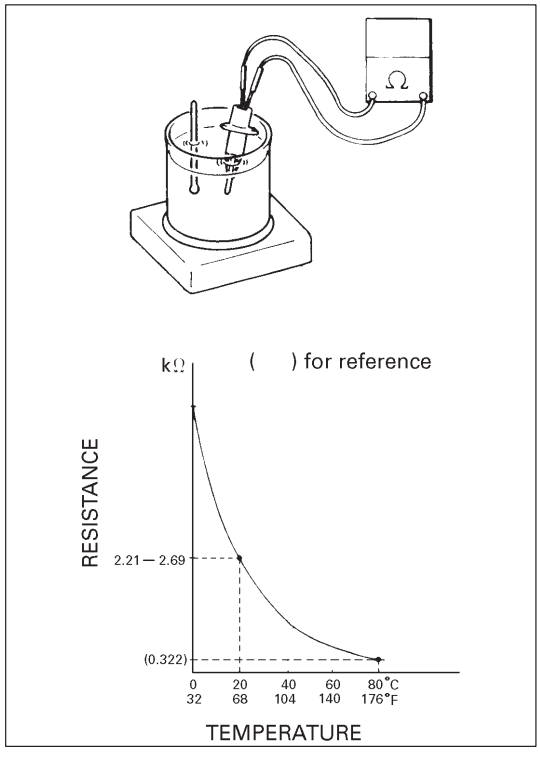

Inspection

Immerse temperature sensing part of IAT sensor in water (or ice) and measure resistance between sensor terminals while heating water gradually.
If measured resistance doesn't show such characteristic as shown in left figure, replace IAT sensor.

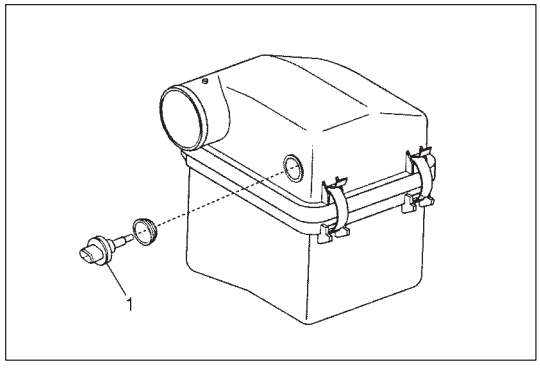

Installation

Reverse removal procedure noting the following.

- Clean mating surfaces of IAT sensor and air cleaner case.
- Connect IAT sensor connector (1) securely.

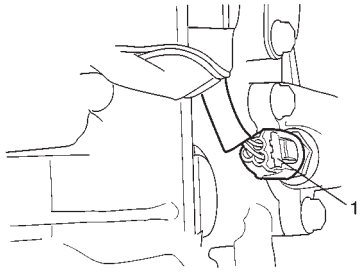

ENGINE COOLANT TEMPERATURE SENSOR (ECT SENSOR)

Removal

1) Disconnect battery negative cable at battery.
2) Drain coolant referring to Section 6B.

> **WARNING:**
> **To help avoid danger of being burned, do not remove radiator cap while engine and radiator are still hot. Scalding fluid and steam can be blown out under pressure if cap is taken off too soon.**

3) Disconnect connector from ECT sensor.
4) Remove ECT sensor (1) from water outlet cap.

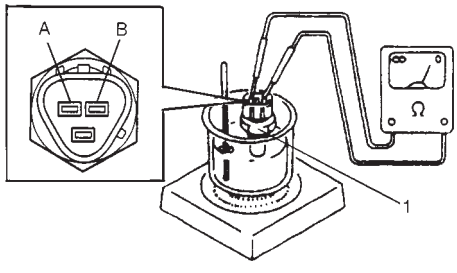

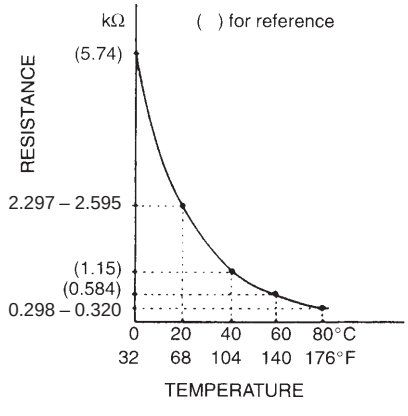

Inspection

Immerse temperature sensing part of ECT sensor (1) in water (or ice) and measure resistance between terminal “A” and “B” while heating water gradually.
If measured resistance doesn’t show such characteristic as shown in left figure, replace ECT sensor (1).

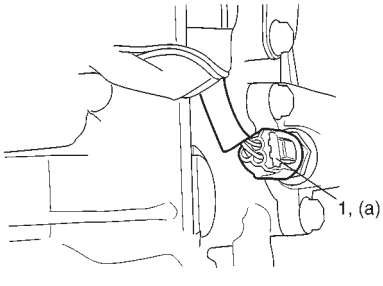

Installation

Reverse removal procedure noting the following:

- Clean mating surfaces of ECT sensor (1) and water outlet cap.
- Check O-ring for damage and replace if necessary.
- Tighten ECT sensor (1) to specified torque.

  Tightening Torque
  (a): 15 N·m (1.5 kg-m, 11.5 lb-ft)
- Connect connector to ECT sensor (1) securely.
- Refill coolant referring to Section 6B.

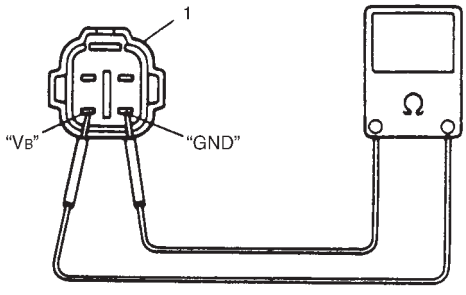

1. Viewed from terminal side

HEATED OXYGEN SENSOR (Sensor-1 and Sensor-2)

Oxygen Sensor Heater Inspection

1) Disconnect sensor connector.
2) Using ohmmeter, measure resistance between terminals "V_B" and "GND" of sensor connector.

   NOTE :
   Temperature of sensor affects resistance value largely. Make sure that sensor heater is at correct temperature.

   Resistance of oxygen sensor heater :
   5.0 – 6.4 Ω at 20°C, 68°F for HO2S-1
   11.7 – 14.3 Ω at 20°C, 68°F for HO2S-2

   If found faulty, replace oxygen sensor.
3) Connect sensor connector securely.

Removal

WARNING:
To avoid danger of being burned, do not touch exhaust system when system is hot. Oxygen sensor removal should be performed when system is cool.

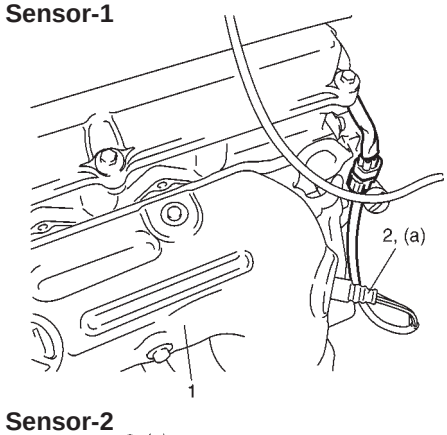

1) Disconnect negative cable at battery.
2) For sensor-1, remove exhaust manifold cover (1) and disconnect connector of heated oxygen sensor and release its wire harness from clamps.
3) For sensor-2, disconnect connector of heated oxygen sensor and release its wire harness from clamp. Hoist vehicle and then remove exhaust No.1 pipe covers (3).
4) Remove heated oxygen sensor (2) from exhaust manifold or exhaust No.1 pipe.

Installation

Reverse removal procedure noting the following.

- Tighten heated oxygen sensor (2) to specified torque.

  Tightening Torque for heated oxygen sensor
  (a): 45 N·m (4.5 kg-m, 32.5 lb-ft)

- Connect connector of heated oxygen sensor (2) and clamp wire harness securely.
- After installing heated oxygen sensor (2), start engine and check that no exhaust gas leakage exists.

CAMSHAFT POSITION SENSOR

Inspection

Check camshaft position sensor referring to DTC P0340 (No. 15) Diag. Flow Table in Section 6. If malfunction is found, replace.

Removal

1) Disconnect negative cable at battery.
2) Disconnect connector from camshaft position sensor.
3) Remove camshaft position sensor from cylinder head.

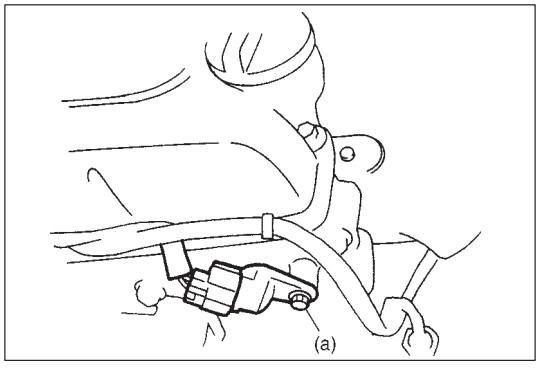

Installation

1) Check that O-ring is free from damage.
2) Check that camshaft position sensor and signal rotor tooth are free from any metal particles and damage.
3) Install camshaft position sensor to sensor case.

   Tightening Torque
   (a): 10 N·m (1.0 kg-m, 7.5 lb-ft)
4) Connect connector to it securely.
5) Connect negative cable to battery.

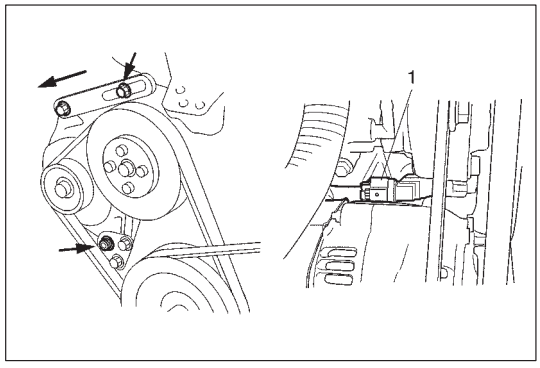

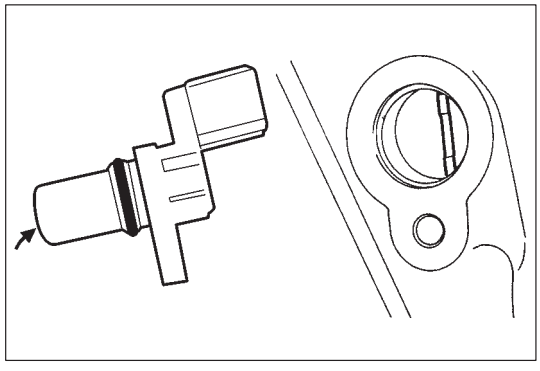

CRANKSHAFT POSITION SENSOR

Inspection

Check crankshaft position sensor referring to step 1 and 2 of DTC P0335 (No.23) Flow Table If malfunction is found, replace.

Removal

1) Disconnect negative cable at battery.
2) Remove generator drive belt, loosen pivot bolt and move generator outward.
3) Disconnect connector from crankshaft position sensor.
4) Remove crankshaft position sensor (1) from cylinder block.

Installation

1) Check to make sure that crankshaft position sensor and pulley tooth is free from any metal particles and damage.
2) Install crankshaft position sensor to cylinder block.
3) Connect connector to it securely.
4) Adjust generator belt tension, refer to Section 6B.
5) Connect negative cable to battery.

VEHICLE SPEED SENSOR (VSS)

Inspection

Check vehicle speed sensor referring to step 3 of DTC P0500 (No.16) Flow Table. If malfunction is found, replace.

Removal/Installation

Refer to Section 7A.

FUEL LEVEL SENSOR (GAUGE)

Inspection

Refer to Section 8.

Removal/Installation

Refer to Section 6C.

KNOCK SENSOR

Inspection

Check knock sensor referring to DTC P0325 (No.17) Flow Table. If malfunction is found, replace.

Removal/Installation

Refer to Section 6A.

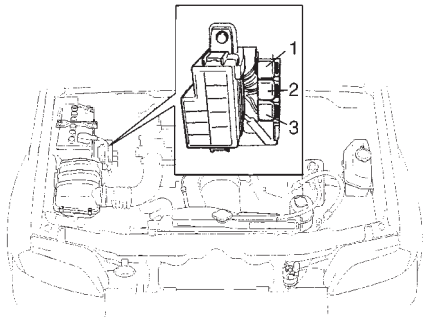

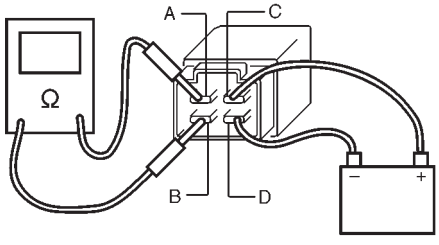

MAIN RELAY, FUEL PUMP RELAY AND A/C CONDENSER FAN CONTROL RELAY

Inspection

1) Disconnect negative cable at battery.
2) Remove main relay (1), fuel pump relay (2) and A/C condenser fan control relay (3) from vehicle.
3) Check that there is no continuity between terminal “A” and “B”.
   If there is continuity, replace relay.
4) Connect battery positive (+) terminal to terminal “C” of relay.
   Connect battery negative (–) terminal “D” of relay.
   Check continuity between terminal “A” and “B”.
   If there is no continuity when relay is connected to the battery, replace relay.

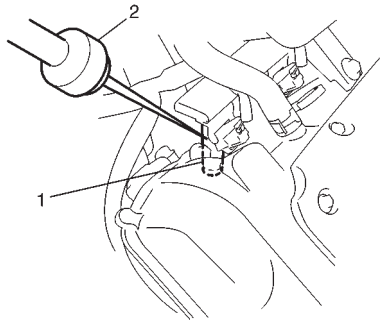

FUEL CUT OPERATION

Inspection

NOTE:
Before inspection, check to make sure that gear shift lever is in neutral position (with A/T model, selector lever in “P” range), A/C is OFF and that parking brake lever is pulled all the way up.

1) Warm up engine to normal operating temperature.
2) While listening to sound of injector (1) by using sound scope (2) or such, increase engine speed to higher than 3,000 r/min.
3) Check to make sure that sound to indicate operation of injector stops when throttle valve is closed instantly and it is heard again when engine speed is reduced to less than about 2,000 r/min.

A/C CONDENSER FAN CONTROL SYSTEM

System Inspection

WARNING:
Keep hands, tools, and clothing away from A/C condenser fan to help prevent personal injury. This fan is electric and can come on whether or not the engine is running. The fan can start automatically in response to the ECT sensor with the ignition switch in the "ON" position.

Check system for operation referring to Flow Table B-8 in Section 6.
If A/C condenser fan fails to operate properly, check relay, A/C condenser fan and electrical circuit.

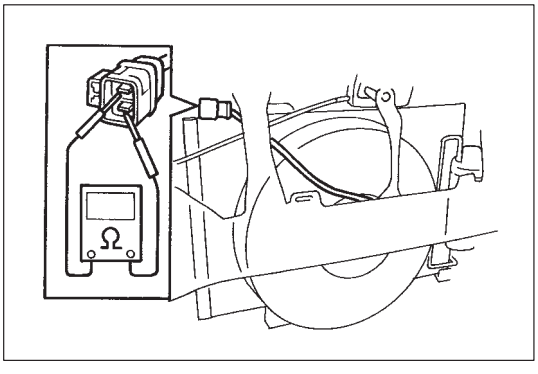

A/C Condenser Fan

Inspection

1) Check continuity between each two terminals.
   If there is no continuity, replace A/C condenser fan motor.

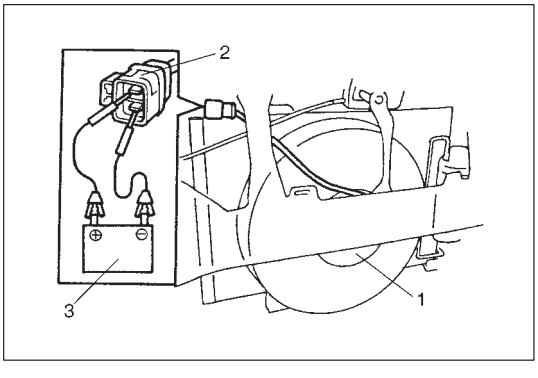

2) Connect battery (3) to A/C condenser fan motor coupler (2) as shown in figure, then check that the A/C condenser fan motor (1) operates smoothly.
   If A/C condenser fan motor does not operate smoothly, replace motor.

   Reference current data: Approx. 6.7 – 8.3 A at 12 V

OUTPUT SIGNALS OF THROTTLE VALVE OPENING AND ENGINE COOLANT TEMP. (Vehicle with A/T only)

Throttle Valve Opening Signal Inspection

Check throttle valve opening (throttle position) signal referring to step 1 of DTC P1700 (No.32 or 33) Flow Table in Section 7B.
If check result is not satisfactory, check each wire harness, circuit connections and TP sensor.

Engine Coolant Temp. Signal Inspection

Check engine coolant temp. signal referring to step 1 of DTC P1709 (No.51) Flow Table in Section 7B.

If check result is not satisfactory, check each wire harness, circuit connection and ECT sensor.

EMISSION CONTROL SYSTEM

EGR SYSTEM (If equipped)

System Inspection (using SUZUKI scan tool)

1) Connect SUZUKI scan tool to DLC with ignition switch OFF.
2) Turn ignition switch ON and then select “DATA LIST” mode on scan tool.
3) Make sure that vehicle condition is as following.
   - Vehicle speed = 0 km/h (0 KPH)
   - Engine speed ≦ 3000 rpm
4) Clear DTC by using “CLEAR INFO” mode.

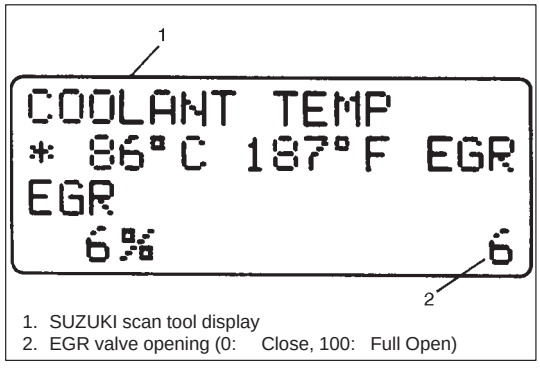

1. SUZUKI scan tool display
2. EGR valve opening (0: Close, 100: Full Open)

5) With engine idling (without depressing accelerator pedal), open EGR valve by using “STEP EGR” mode in “MISC TEST” menu. In this state, according as EGR valve opening increases engine idle speed drops. If not, possible cause is clogged EGR gas passage, stuck or faulty EGR valve, poor performance of ECT sensor or TP sensor or DTC and/or pending DTC is (are) stored in ECM memory.

Removal

1) Disconnect negative cable at battery.
2) Disconnect EGR valve connector.
3) Remove EGR pipe.
4) Remove EGR valve and gasket from cylinder head.

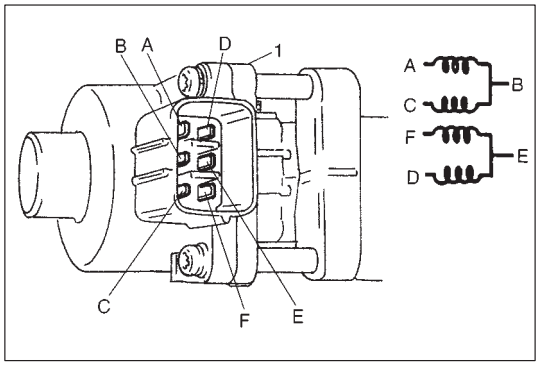

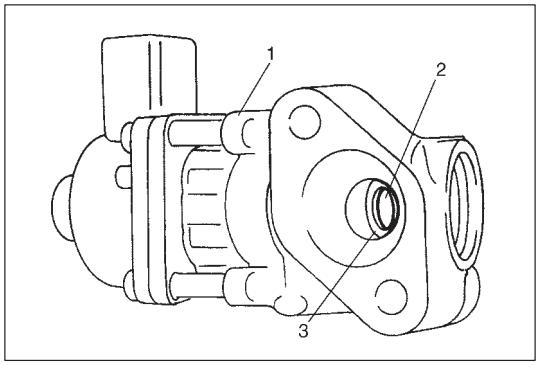

Inspection

1) Check resistance between following terminals of EGR valve (1) in each pair.

Terminal	Standard resistance
A – B C – B F – E D – E	20 – 24 Ω

If found faulty, replace EGR valve assy.

2) Remove carbon from EGR valve (1) gas passage.

NOTE:
Do not use any sharp–edged tool to remove carbon.
Be careful not to damage or bend EGR valve, valve seat and rod.

3) Inspect valve (2), valve seat (3) and rod for fault, cracks, bend or other damage.
If found faulty, replace EGR valve assembly.

Installation

Reverse removal procedure noting following.

- Clean mating surface of valve and cylinder head.
- Use new gaskets.

EVAPORATIVE EMISSION (EVAP) CONTROL SYSTEM

EVAP Canister Purge Inspection

NOTE:
Before inspection, check to make sure that gear shift lever is in neutral position (with A/T model, selector lever in "P" range) and that parking brake lever is pulled all the way up.

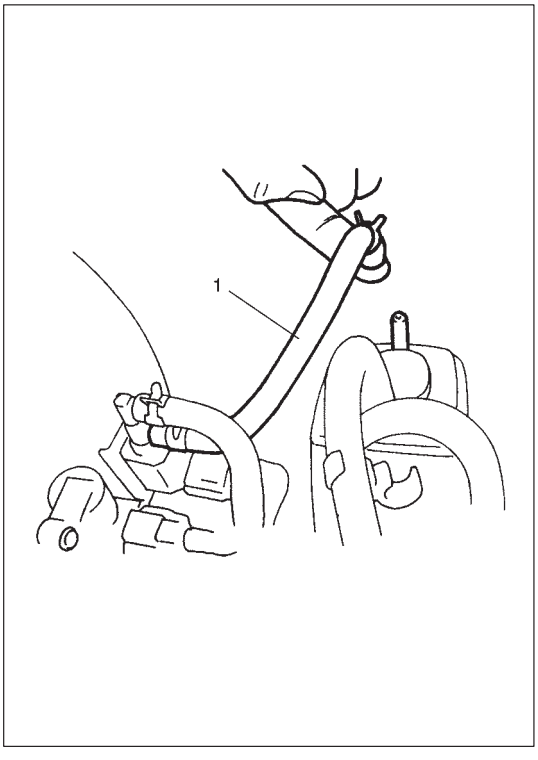

1) Disconnect purge hose (1) from EVAP canister.
2) Place finger against the end of disconnected hose and check that vacuum is not felt there when engine is cool and running at idle speed.
3) Connect purge hose to EVAP canister and warm up engine to normal operating temperature.
4) Turn ignition switch OFF.
5) Restart engine and run it at 2000 r/min. for 2 min. or more.
6) Disconnect purge hose from EVAP canister.
7) Also check that vacuum is felt when engine is running at 3000 r/min.

   NOTE:
   ECM detects a change in the purge fuel vapor concentration and sometimes stops purging for several seconds but this is nothing abnormal.

8) If vacuum is not felt in Step 7), run engine at idle for 8 min. or more and then repeat check in Step 7).

If check result is not satisfactory in Steps 2) and 8), check vacuum passage, hoses, EVAP canister purge valve, wire harness and ECM.

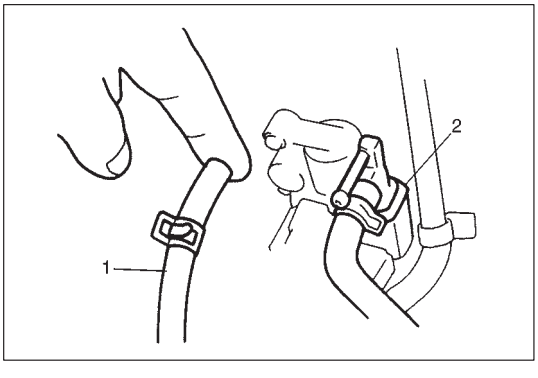

Vacuum Passage Inspection

Start engine and run it at idle speed. Disconnect vacuum hose (1) from EVAP canister purge valve (2). With finger placed against hose disconnected, check that vacuum is applied.
If it is not applied, clean vacuum passage by blowing compressed air.

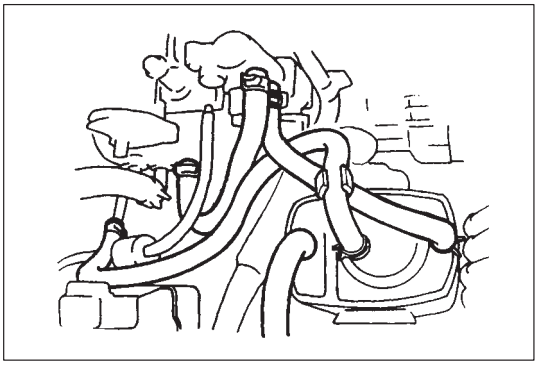

Vacuum Hose Inspection

Check hoses for connection, leakage, clog and deterioration. Replace as necessary.

EVAP Canister Purge Valve Inspection

Check EVAP canister purge valve referring to step 1 of DTC P0443 Flow Table.
If found malfunction, replace.

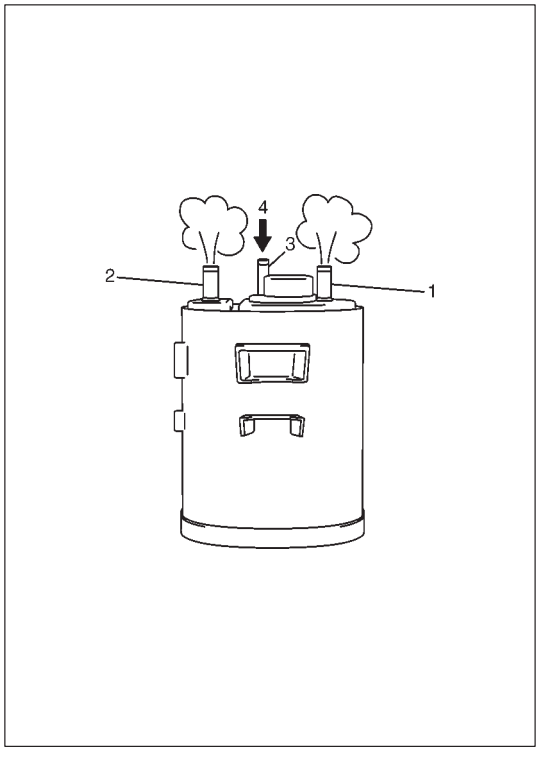

EVAP Canister Inspection

WARNING:
DO NOT SUCK nozzles on EVAP canister. Fuel vapor inside EVAP canister is harmful.

1) Check outside of EVAP canister visually.
2) Disconnect vacuum hoses from EVAP canister.
3) Check that there should be no restriction of flow through purge pipe (1) and air pipe (2) when air is blown (4) into tank pipe (3). If any faulty condition is found in above inspection replace.

PCV SYSTEM

NOTE:
Be sure to check that there is no obstruction in PCV valve or its hoses before checking IAC duty, for obstructed PCV valve or hose hampers its accurate adjustment.

PCV Hose Inspection

Check hoses for connection, leakage, clog and deterioration. Replace as necessary.

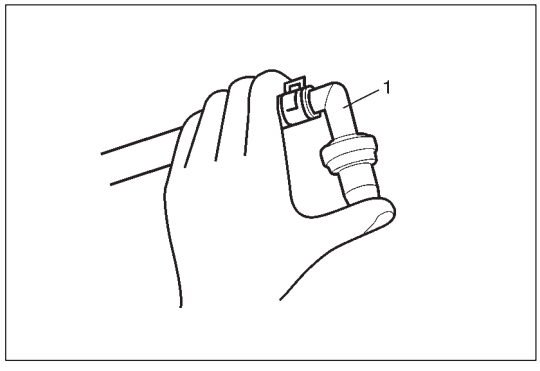

PCV Valve Inspection

1) Disconnect PCV valve (1) from cylinder head cover and install plug to head cover hole.
2) Run engine at idle.
3) Place your finger over end of PCV valve (1) to check for vacuum. If there is no vacuum, check for clogged valve. Replace as necessary.

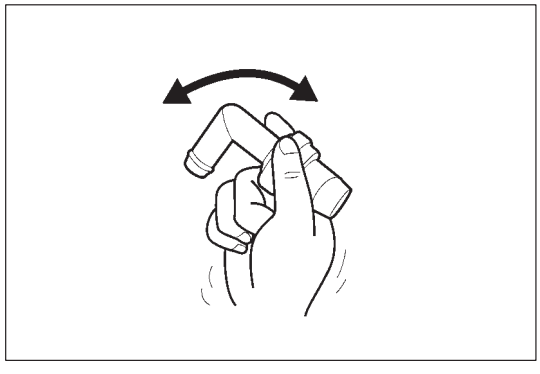

4) After checking vacuum, stop engine and remove PCV valve (1). Shake valve and listen for the rattle of check needle inside the valve. If valve does not the rattle, replace valve.
5) After checking, remove plug and install PCV valve (1).

SPECIAL TOOLS

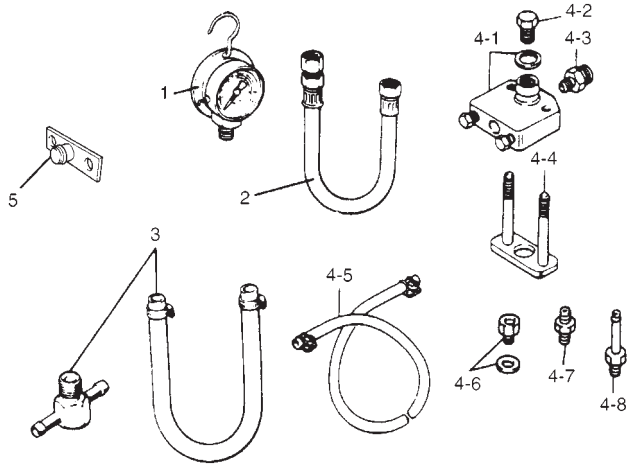

1. Pressure gauge
   09912-58441
2. Pressure hose
   09912-58431
3. 3-way joint & hose
   09912-58490
4. Checking tool set
   09912-58421

4-1. Tool body & washer
4-2. Body plug
4-3. Body attachment-1
4-4. Holder
4-5. Return hose & clamp
4-6. Body attachment-2 & washer
4-7. Hose attachment-1
4-8. Hose attachment-2

5. Checking tool plate
   09912-57610

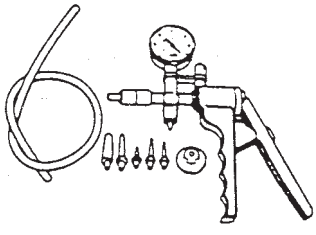

09917-47010
Vacuum pump gauge

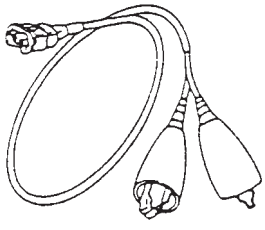

09930-88530
Injector test lead

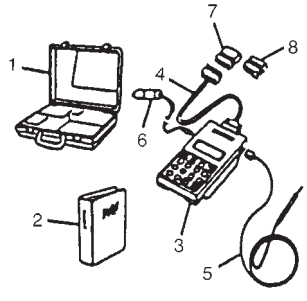

09931-76011
SUZUKI scan tool (Tech 1A) kit

1. Storage case
2. Operator's manual
3. Tech 1A
4. DLC cable (14/26 pin, 09931-76040)
5. Test lead/probe
6. Power source cable
7. DLC cable adaptor
8. Self-test adaptor

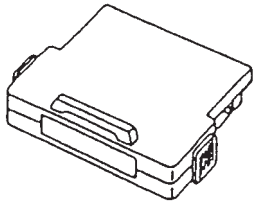

Mass storage cartridge

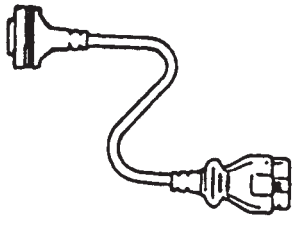

09931-76030
16/14 pin DLC cable

TIGHTENING TORQUE SPECIFICATIONS

Fastening parts	Tightening torque		
	N·m	kg-m	lb-ft
TP sensor mounting screw	2.5	0.25	1.8
IAC valve screw	3.5	0.35	2.5
ECT sensor	15	1.5	11.5
Heated oxygen sensor-1 and -2	45	4.5	32.5
Camshaft position sensor	10	1.0	7.5

SECTION 6F

IGNITION SYSTEM (ELECTRONIC IGNITION SYSTEM)

WARNING:
For vehicles equipped with Supplemental Restraint (Air Bag) System:

- **Service on and around the air bag system components or wiring must be performed only by an authorized SUZUKI dealer. Refer to "Air Bag System Components and Wiring Location View" under "General Description" in air bag system section in order to confirm whether you are performing service on or near the air bag system components or wiring. Please observe all WARNINGS and "Service Precautions" under "On-Vehicle Service" in air bag system section before performing service on or around the air bag system components or wiring. Failure to follow WARNINGS could result in unintentional activation of the system or could render the system inoperative. Either of these two conditions may result in severe injury.**
- **Technical service work must be started at least 90 seconds after the ignition switch is turned to the "LOCK" position and the negative cable is disconnected from the battery. Otherwise, the system may be activated by reserve energy in the Sensing and Diagnostic Module (SDM).**

CONTENTS

GENERAL DESCRIPTION 6F-2
DIAGNOSIS 6F-3
ON-VEHICLE SERVICE 6F-5
Ignition Spark Test 6F-5
High-Tension Cords 6F-5
Spark Plugs 6F-6
Ignition Coil Assembly 6F-7
Crankshaft Position Sensor 6F-7
Ignition Timing 6F-7
SPECIAL TOOLS 6F-9

GENERAL DESCRIPTION

The ignition system is an electronic (distributorless) ignition system. It consists of the parts as described below and has an electronic ignition control system.

- ECM
  It detects the engine and vehicle conditions through the signals from the sensors, determines the most suitable ignition timing and time for electricity to flow to the primary coil and sends a signal to the ignitor (power unit) in the ignition coil assembly.
- Ignition coil assembly (including an ignitor)
  The ignition coil assembly has a built-in ignitor which turns ON and OFF the current flow to the primary coil according to the signal from ECM. When the current flow to the primary coil is turned OFF, a high voltage is induced in the secondary coil.
- High tension cords and spark plugs.
- CMP sensor (Camshaft position sensor) and CKP sensor (Crankshaft position sensor)
  Using signals from these sensors, ECM identifies the specific cylinder whose piston is in the compression stroke, detects the crank angle and adjust initial ignition timing automatically.
- TP sensor, ECT sensor, MAP sensor and other sensors/switches
  Refer to section 6E for details.

Although this ignition system does not have a distributor, it has two ignition coil assemblies (one is for No.1 and No.4 spark plugs and the other is for No.2 and No.3 spark plugs). When an ignition signal is sent from ECM to the ignitor in the ignition coil assembly for No.1 and No.4 spark plugs, a high voltage is induced in the secondary coil and that passes through the high-tension cords and causes No.1 and No.4 spark plugs to spark simultaneously. Likewise, when an ignition signal is sent to the ignitor in the other ignition coil assembly, No.2 and No.3 spark plugs spark simultaneously.

SYSTEM COMPONENTS

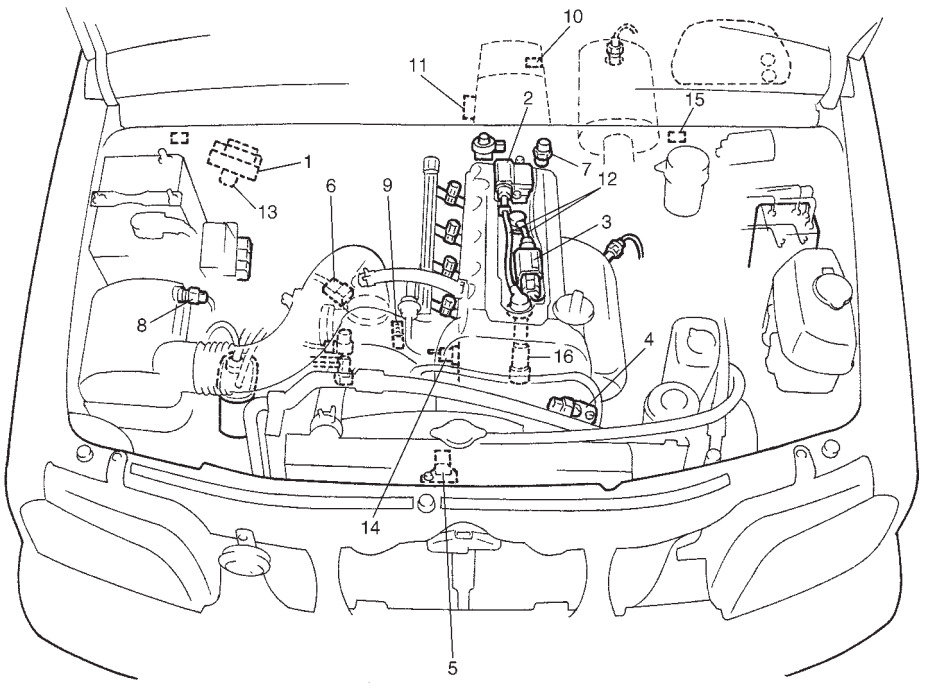

1. ECM
2. Ignition coil assembly for No.1 and No.4 spark plugs
3. Ignition coil assembly for No.2 and No.3 spark plugs
4. CMP sensor
5. CKP sensor
6. MAP sensor
7. ECT sensor
8. IAT sensor
9. TP sensor
10. VSS
11. Transmission range switch (A/T)
12. High-tension cords
13. Monitor connector
14. Knock sensor
15. DLC
16. Spark plugs

SYSTEM WIRING DIAGRAM

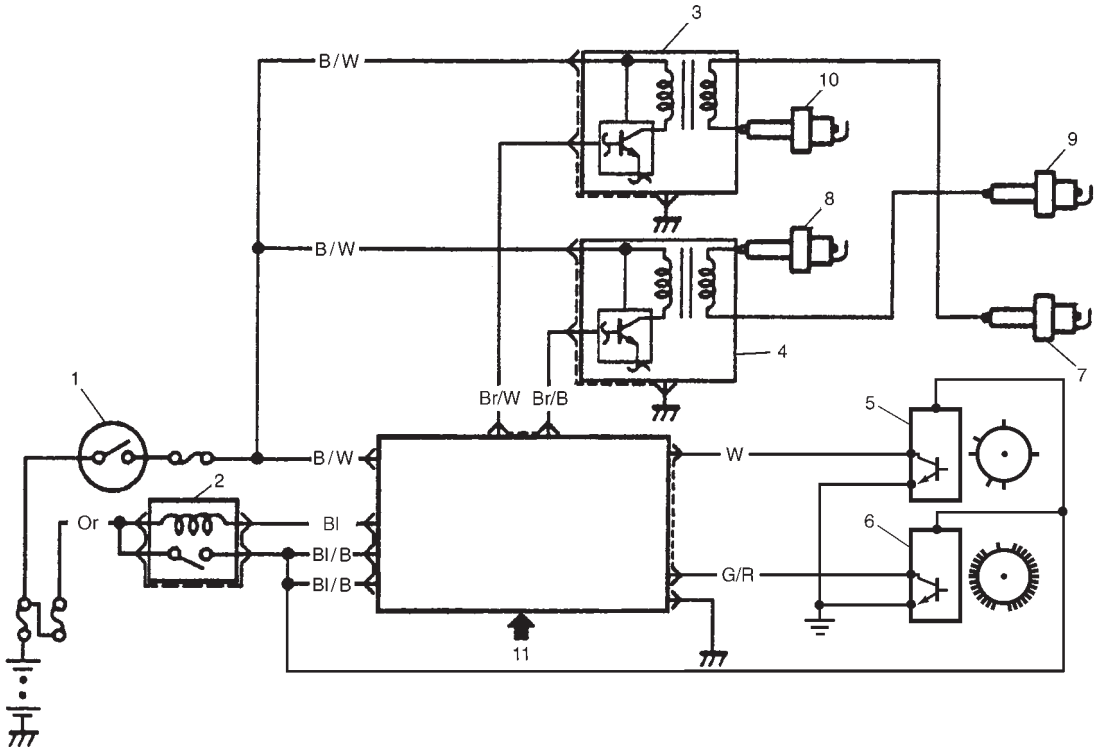

1. Ignition switch
2. Main relay
3. Ignition coil assembly for No.1 and No.4 spark plugs
4. Ignition coil assembly for No.2 and No.3 spark plugs
5. CMP sensor
6. CKP sensor
7. No.1 spark plug
8. No.2 spark plug
9. No.3 spark plug
10. No.4 spark plug
11. Sensed information
    - MAP sensor
    - ECT sensor
    - IAT sensor
    - TP sensor
    - Knock sensor
    - VSS
    - Park / Neutral position signal
    - Electric load signal
    - Engine start signal
    - Test switch terminal

DIAGNOSIS

Condition	Possible Cause	Correction
Engine cranks, but will not start or hard to start	**No spark**	
	● Blown fuse for ignition coil	Replace.
	● Loose connection or disconnection of lead wire or high-tension cord(s)	Connect securely.
	● Faulty high-tension cord(s)	Replace.
	● Faulty spark plug(s)	Adjust, clean or replace.
	● Faulty ignition coil	Replace ignition coil assembly.
	● Faulty CKP sensor or CKP sensor plate	Clean, tighten or replace.
	● Faulty ECM	Replace.
Poor fuel economy or engine performance	● Incorrect ignition timing	Check related sensors and CKP sensor plate.
	● Faulty spark plug(s) or high-tension cord(s)	Adjust, clean or replace.
	● Faulty ignition coil assembly	Replace.
	● Faulty CKP sensor or CKP sensor plate	Clean, tighten or replace.
	● Faulty ECM	Replace.

IGNITION SYSTEM DIAGNOSTIC FLOW TABLE

STEP	ACTION	YES	NO
1	Was “ENGINE DIAG. FLOW TABLE” performed?	Go to Step 2.	Go to “ENGINE DIAG. FLOW TABLE” in section 6.
2	Ignition Spark Test 1) Check all spark plugs for condition and type referring to “Spark Plugs” section. 2) If OK, perform ignition spark test, referring to “Ignition Spark Test” section. Is spark emitted from all spark plugs?	Go to Step 11.	Go to Step 3.
3	Diagnostic Trouble Code (DTC) Check Is DTC stored in ECM?	Go to applicable DTC Diag. Flow Table in section 6.	Go to Step 4.
4	Electrical Connection Check 1) Check ignition coil assemblies and high-tension cords for electrical connection. Are they connected securely?	Go to Step 5.	Connect securely.
5	High-Tension Cords Check 1) Check high-tension cord for resistance referring to “High-Tension Cords” section. Is check result satisfactory?	Go to Step 6.	Replace high-tension cord(s).
6	Ignition Coil Assembly Power Supply and Ground Circuit Check 1) Check ignition coil assembly power supply and ground circuits for open and short. Are circuits in good condition?	Go to Step 7.	Repair or replace.
7	Ignition Coil Assembly Check 1) Check ignition coil for resistance referring to “Ignition Coil Assembly” section. Is check result satisfactory?	Go to Step 8.	Replace ignition coil assembly.
8	Crankshaft Position (CKP) Sensor Check 1) Check crankshaft position sensor referring to Step 3 and 4 of DTC P0335 (No.23) Diag. Flow Table in section 6. Is check result satisfactory?	Go to Step 9.	Tighten CKP sensor bolt, replace CKP sensor or CKP sensor plate.
9	Ignition Trigger Signal Circuit Check 1) Check ignition trigger signal wire for open, short and poor connection. Is circuit in good condition?	Go to Step 10.	Repair or replace.
10	A Known-good Ignition Coil Assembly Substitution 1) Substitute a known-good ignition coil assembly and then repeat Step 2. Is check result of Step 2 satisfactory?	Go to Step 11.	Substitute a known-good ECM and then repeat Step 2.
11	Ignition Timing Check 1) Check initial ignition timing and ignition timing advance referring to “Ignition Timing” section. Is check result satisfactory?	System is in good condition.	Check CKP sensor, CKP sensor plate and input signals related to this system.

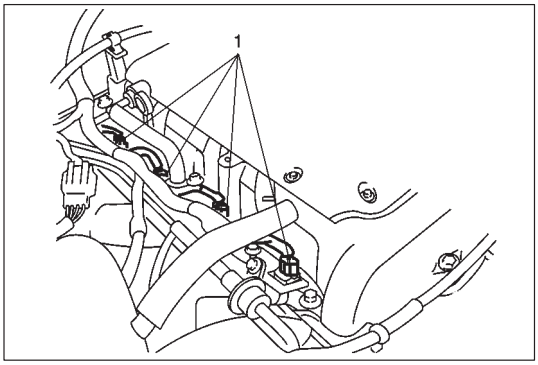

ON-VEHICLE SERVICE

IGNITION SPARK TEST

1) Disconnect all injector connectors (1) from injectors.

> **WARNING:**
> **Without disconnection of injector couplers, combustible gas may come out from spark plug holes during this test and may get ignited in engine room.**

2) Remove cylinder head upper cover.
3) Remove spark plug and check it for condition and type referring to “Spark Plugs” in this section.
4) If OK, connect ignition coil connector to ignition coil assembly and connect spark plug to ignition coil assembly or high-tension cord. Ground spark plug.
5) Crank engine and check if each spark plug sparks.
6) If no spark is emitted, inspect the related parts as described under “Diagnosis” earlier in this section.

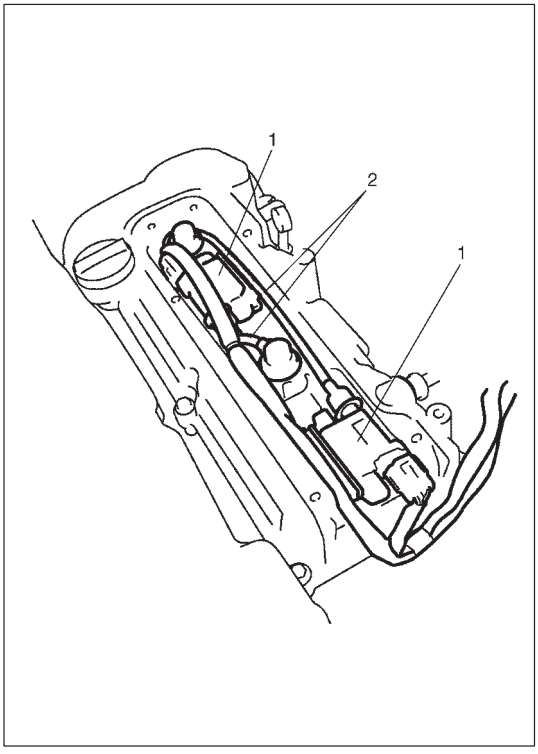

HIGH-TENSION CORDS

1) Remove cylinder head upper cover and disconnect high-tension cords (2) from ignition coil assemblies (1) while gripping each cap.
2) Pull out high-tension cords from spark plugs while gripping each cap.

> **CAUTION:**
> - **Removal of high-tension cords together with clamps will be recommended so as not to damage their inside wire (resistive conductor).**
> - **For the same reason, pull out each connection by gripping cap portion.**

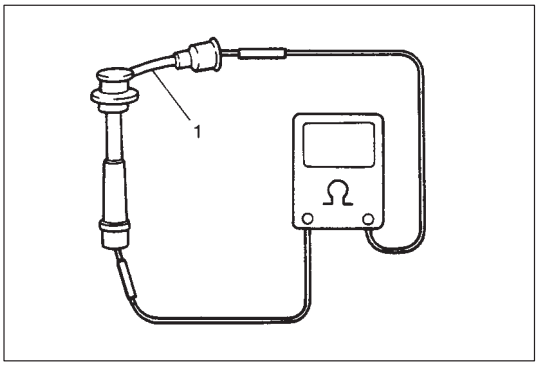

3) Measure resistance of high-tension cord (1) by using ohmmeter.

   High-tension cord resistance: 4 – 10 kΩ/m (1.2 – 3.0 kΩ/ft)

4) If resistance exceeds specification, replace high-tension cord(s).

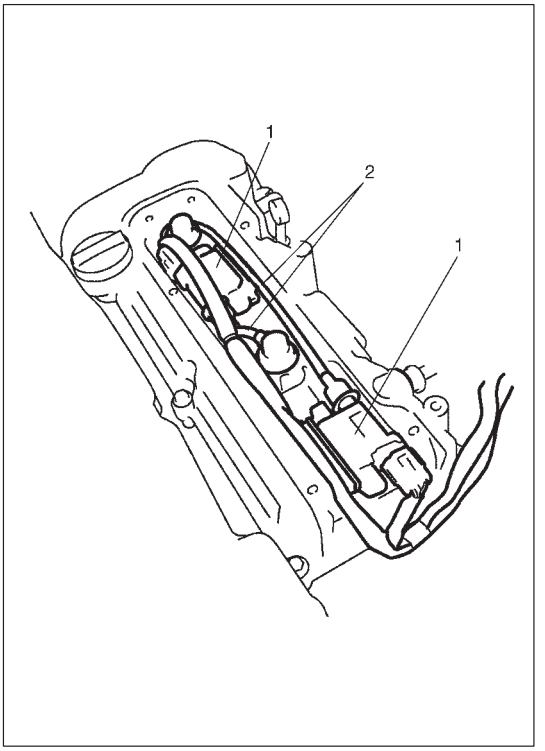

5) Install high-tension cords (2) to spark plugs and ignition coil assemblies (1) while gripping each cap.

CAUTION:
- **Never attempt to use metal conductor high-tension cords as replacing parts.**
- **Insert each cap portion fully when installing high-tension cords.**

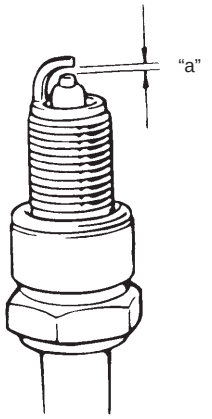

SPARK PLUGS

1) Pull out high-tension cords by gripping their caps and then remove ignition coil assemblies referring to IGNITION COIL ASSEMBLY in this section.
2) Remove spark plugs.
3) Inspect them for:
   - Electrode wear
   - Carbon deposits
   - Insulator damage
4) If any abnormality is found, adjust air gap, clean with spark plug cleaner or replace them with specified new plugs.
   For iridium/platinum spark plugs, replace them with new plugs.

   Spark plug air gap "a" : 1.0 – 1.1 mm (0.040 – 0.043 in.)
   Spark plug type : NGK BKR6E-11, IFR5E11
   : DENSO K20PR-U11, SK16PR-A11

   NOTE:
   NGK IFR5E11 or DENSO SK16PR-A11 is highly recommended for better engine starting performance under –25°C (–13°F).

   CAUTION:
   When servicing the iridium/platinum spark plugs (slender center electrode type plugs), do not touch the center electrode to avoid damage to it. The electrode is not strong enough against mechanical force as it is slender and its material is not mechanically tough.

5) Install spark plugs and torque them to specification.

   Tightening Torque for spark plug
   25 N·m (2.5 kg-m, 18.0 lb-ft)
6) Install ignition coil assemblies referring to IGNITION COIL ASSEMBLY in this section.
7) Install high-tension cords securely by gripping their caps.

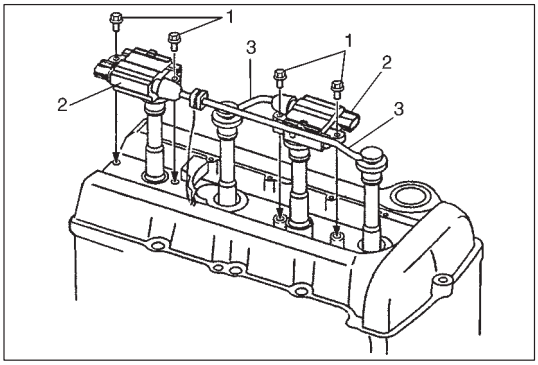

IGNITION COIL ASSEMBLY (INCLUDING IGNITOR)

1) Disconnect negative cable at battery.
2) Remove cylinder head upper cover.
3) Disconnect ignition coil connector.
4) Disconnect high-tension cord (3) from ignition coil assembly (2).
5) Remove ignition coil bolts (1) and then pull out ignition coil assembly.

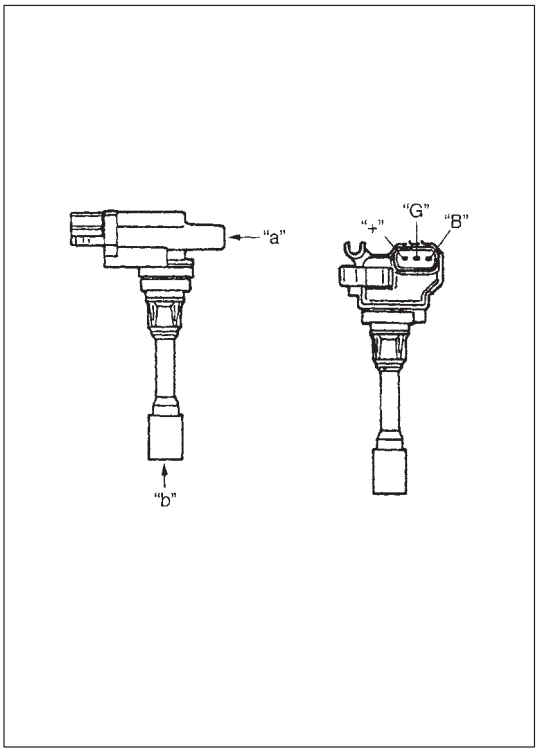

6) Measure resistance between terminals as follows by using analog type ohmmeter.
   If check result is not satisfactory, replace ignition coil assembly.

   "a" – "b" : 7.5 – 14 kΩ (at 20°C, 68°F)
   "B" – "G" : Neither 0 Ω or ∞ (infinity)
   "+" – "B" : Not 0 Ω
   "+" – "G" : Not 0 Ω

7) Install ignition coil assembly.
8) Tighten ignition coil bolts, and then connect ignition coil connector.
9) Install high-tension cord to ignition coil assembly while gripping its cap.
10) Install cylinder head upper cover.

CRANKSHAFT POSITION SENSOR (CKP SENSOR)

Refer to section 6E for removal, inspection and installation.

IGNITION TIMING

NOTE:

- **Ignition timing is not adjustable. If ignition timing is out of specification, check system related parts.**
- **Before starting engine, place transmission gear shift lever in "Neutral" (shift selector lever to "P" range for A/T model), and set parking brake.**

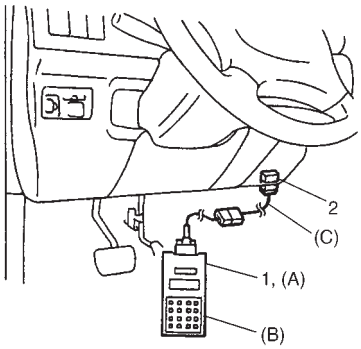

INSPECTION

1) When using SUZUKI scan tool (1), connect SUZUKI scan tool to DLC (2) with ignition switch OFF.

   Special Tool
   (A): 09931-76011 (SUZUKI scan tool)
   (B): Mass storage cartridge
   (C): 09931-76030 (16/14 pin DLC cable)

2) Start engine and warm it up to normal operating temperature.
3) Make sure that all of electrical loads except ignition are switched off.
4) Check to be sure that idle speed is within specification.
   (Refer to SECTION 6E.)

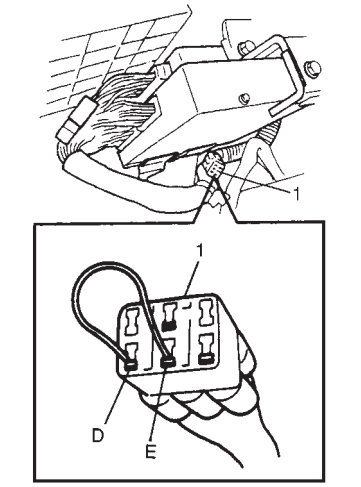

5) Fix ignition timing to initial one as follows.
   When using SUZUKI scan tool:
   Select "MISC" mode on SUZUKI scan tool and fix ignition timing to initial one.
   Without using SUZUKI scan tool: (vehicle without immobilizer indicator lamp)
   Disconnect scan tool from DLC, and connect D and E terminals of monitor connector (1) or E to body ground by using service wire so that ignition timing is fixed on initial one.

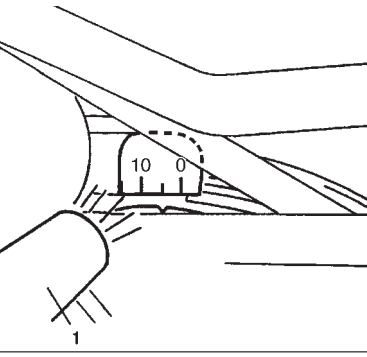

6) Using timing light (1), check that ignition timing is within specification.

Initial ignition timing (Test switch terminal grounded or fixed with SUZUKI scan tool)	**: 5 ± 3° BTDC at idle speed**
Ignition order	**: 1-3-4-2**

7) If ignition timing is out of specification, check the followings:
   - CKP sensor
   - CKP sensor plate
   - TP sensor
   - Test switch signal circuit
   - VSS
   - Timing chain cover installation
8) After checking Initial Ignition Timing, release ignition timing fixation by using SUZUKI scan tool or disconnect service wire from monitor connector.
9) With engine idling (test switch terminal ungrounded, throttle opening at closed position and car stopped), check that ignition timing is about 7°–17° BTDC. (Constant variation within a few degrees from 7°–17° indicates no abnormality but proves operation of electronic timing control system.) Also, check that increasing engine speed advances ignition timing.
   If above check results are not satisfactory, check CKP sensor, test switch terminal circuit and ECM.

SPECIAL TOOLS

<table>
<tr>
<td>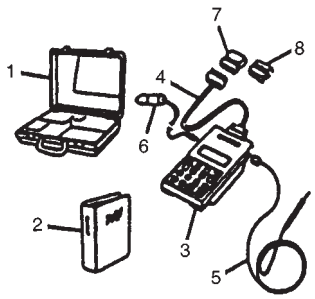

1. Storage case
2. Operator's manual
3. Tech 1A
4. DLC cable (14/26 pin, 09931-76040)
5. Test lead/probe
6. Power source cable
7. DLC cable adaptor
8. Self-test adaptor

09931-76011
SUZUKI scan tool (Tech 1A) kit</td>
<td>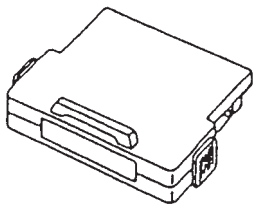

Mass storage cartridge</td>
<td>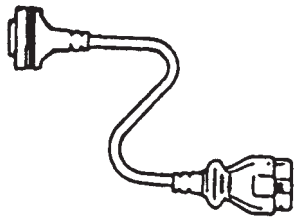

09931-76030
16/14 pin DLC cable</td>
</tr>
</table>

SECTION 6G

CRANKING SYSTEM

WARNING:
For vehicles equipped with Supplemental Restraint (Air Bag) System

- **Service on and around the air bag system components or wiring must be performed only by an authorized SUZUKI dealer. Refer to "Air Bag System Components and Wiring Location View" under "General Description" in air bag system section in order to confirm whether you are performing service on or near the air bag system components or wiring. Please observe all WARNINGS and "Service Precautions" under "On-Vehicle Service" in air bag system section before performing service on or around the air bag system components or wiring. Failure to follow WARNINGS could result in unintentional activation of the system or could render the system inoperative. Either of these two conditions may result in severe injury.**
- **Technical service work must be started at least 90 seconds after the ignition switch is turned to the "LOCK" position and the negative cable is disconnected from the battery. Otherwise, the system may be activated by reserve energy in the Sensing and Diagnostic Module (SDM).**

NOTE:
Starting motor varies depending on specifications, etc. Therefore, be sure to check model and specification of vehicle being serviced before replacing parts.

CONTENTS

GENERAL DESCRIPTION 6G-2
Starting Motor 6G-2
SPECIFICATIONS 6G-3

GENERAL DESCRIPTION

STARTING MOTOR

The starting motor consists of parts shown in below and has permanent magnets mounted in starting motor yoke (frame).

The magnetic switch assembly and parts in the starting motor are enclosed in the housings so that they will be protected against possible dirt and water splash.

NOTE:

- **Make sure to apply grease before assembly where so indicated "A" in the figure below.**
- **Spare parts have been lubricated.**

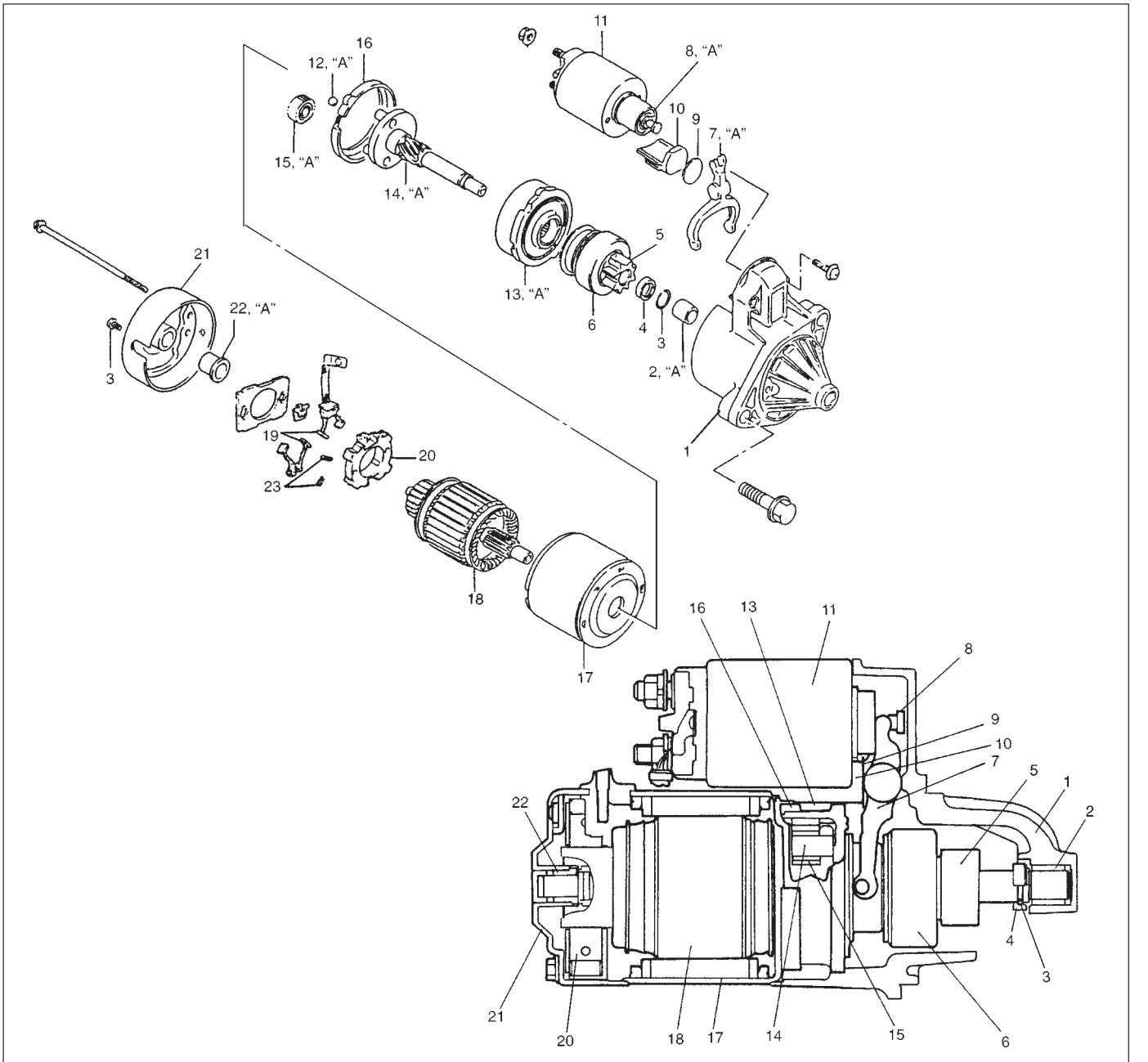

"A": Apply grease (99000-25010)

1. Front housing
2. Bush
3. Snap ring
4. Pinion stop ring
5. Pinion gear
6. Over-running clutch
7. Lever
8. Plunger
9. Plate
10. Seal rubber
11. Magnetic switch
12. Ball
13. Internal gear
14. Planetary carrier shaft
15. Planetary gear
16. Packing
17. Yoke
18. Armature
19. Brush
20. Brush holder
21. Rear bracket
22. Rear bush
23. Brush spring

SPECIFICATIONS

Voltage			12 volts	
Output			0.9 kW	1.2 kW
Rating			30 seconds	
Direction of rotation			Clockwise as viewed from pinion side	
Brush length			12.3 mm (0.48 in.)	12.3 mm (0.48 in.)
Number of pinion teeth			8	
Performance		Condition	Guarantee	
Around at 20°C (68°F)	No load characteristic	11.0 V	90 A maximum 2,800 rpm minimum	90 A maximum 2,500 rpm minimum
	Load characteristic	8.0 V 200 A	4.8 N·m (0.48 kg-m, 3.5 lb-ft) minimum 1,260 rpm minimum	—
		7.5 V 300 A	—	10.5 N·m (1.05 kg-m, 7.6 lb-ft) minimum 880 rpm minimum
	Locked rotor current	3.5 V	550 A maximum 12.2 N·m (1.2 kg-m, 8.8 lb-ft) minimum	—
		4.0 V	—	760 A maximum 19.5 N·m (2.0 kg-m, 14.1 lb-ft) minimum
	Magnetic switch operating voltage		8 volts maximum	

SECTION 6H

CHARGING SYSTEM

WARNING:
For vehicles equipped with Supplemental Restraint (Air Bag) System

- **Service on and around the air bag system components or wiring must be performed only by an authorized SUZUKI dealer. Refer to "Air Bag System Components and Wiring Location View" under "General Description" in air bag system section in order to confirm whether you are performing service on or near the air bag system components or wiring. Please observe all WARNINGS and "Service Precautions" under "On-Vehicle Service" in air bag system section before performing service on or around the air bag system components or wiring. Failure to follow WARNINGS could result in unintentional activation of the system or could render the system inoperative. Either of these two conditions may result in severe injury.**
- **Technical service work must be started at least 90 seconds after the ignition switch is turned to the "LOCK" position and the negative cable is disconnected from the battery. Otherwise, the system may be activated by reserve energy in the Sensing and Diagnostic Module (SDM).**

NOTE:
For descriptions (items) not found in this section, refer to the same section of the Service Manual mentioned in the FOREWORD of this manual.

CONTENTS

GENERAL DESCRIPTION 6H-2
GENERATOR 6H-2
DIAGNOSIS 6H-3
GENERATOR 6H-3
UNIT REPAIR OVERHAUL 6H-6
GENERATOR 6H-6
Inspection 6H-6
SPECIFICATIONS 6H-8
GENERATOR 6H-8
TIGHTENING TORQUE SPECIFICATIONS 6H-8

GENERAL DESCRIPTION

GENERATOR

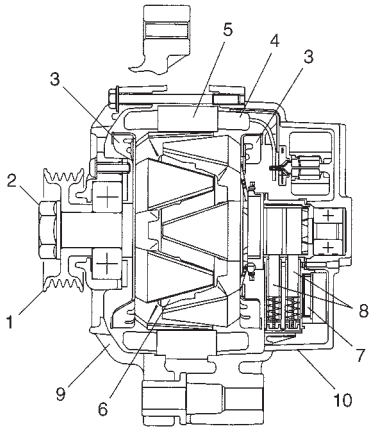

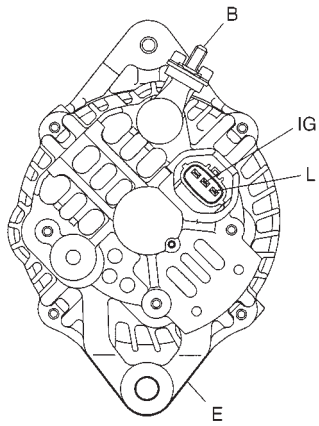

1. Pulley
2. Pulley nut
3. Rotor fan
4. Stator coil
5. Stator core
6. Field coil
7. Regulator
8. Brush
9. Front housing
10. Rear housing

B : Generator output
E : Ground
IG : Ignition terminal
L : Lamp terminal

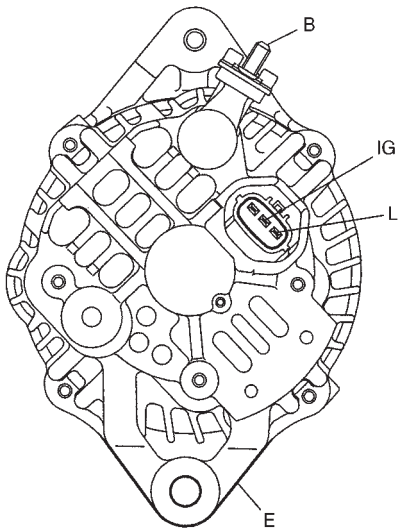

B : Generator output (Battery terminal)
IG : Ignition terminal
L : Lamp terminal
E : Ground

DIAGNOSIS

GENERATOR

CAUTION:
- **Do not mistake polarities of IG terminal and L terminal.**
- **Do not create a short circuit between IG and L terminals. Always connect these terminals through a lamp.**
- **Do not connect any load between L and E.**
- **When connecting a charger or a booster battery to vehicle battery, refer to this section describing battery charging.**

Trouble in charging system will show up as one or more of following conditions:
1) Faulty indicator lamp operation.
2) An undercharged battery as evidenced by slow cranking or indicator dark.
3) An overcharged battery as evidenced by excessive spewing of electrolyte from vents.

Noise from generator may be caused by a loose drive pulley, loose mounting bolts, worn or dirty bearings, defective diode, or defective stator.

FAULTY INDICATOR LAMP OPERATION

PROBLEM	POSSIBLE CAUSE	CORRECTION
Charge light does not light with ignition ON and engine off	● Fuse blown ● Light burned out ● Wiring connection loose ● IC regulator faulty	Check fuse. Replace light. Tighten loose connection. Check generator
Charge light does not go out with engine running (battery requires frequent recharging)	● Drive belt loose or worn ● IC regulator or generator faulty ● Wiring faulty	Adjust or replace drive belt. Check charging system. Repair wiring.

UNDERCHARGED BATTERY

This condition, as evidenced by slow cranking or indicator clear with red dot can be caused by one or more of the following conditions even though indicator lamp may be operating normal.
Following procedure also applies to cars with voltmeter and ammeter.

1) Make sure that undercharged condition has not been caused by accessories left on for extended period of time.
2) Check drive belt for proper tension.
3) If battery defect is suspected, refer to BATTERY section.
4) Inspect wiring for defects. Check all connections for tightness and cleanliness, battery cable connections at battery, starting motor and ignition ground cable.
5) Connect voltmeter and ammeter as shown in left figure.

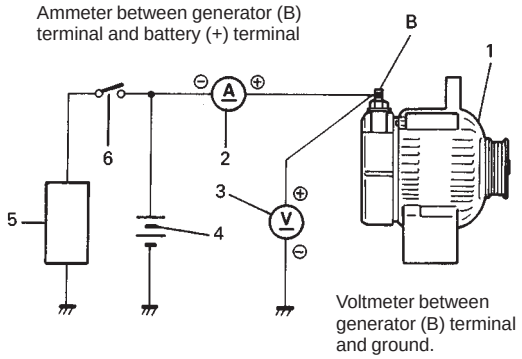

1. Generator
2. Ammeter
3. Voltmeter
4. Battery
5. Load
6. Switch

Voltmeter
Set between generator B terminal and ground.

Ammeter
Set between generator B terminal and battery (+) terminal.

NOTE:
Use fully charged battery.

6) Measure current and voltage.

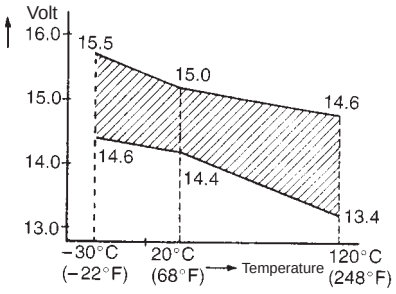

No-load Check

1) Run engine from idling up to 2,000 rpm and read meters.

NOTE:
Turn off switches of all accessories (wiper, heater etc.).

Standard current: 10 A maximum

Standard voltage:14.4 – 15.0 V (at 20°C, 68°F)

NOTE:
Consideration should be taken that voltage will differ somewhat with regulator case temperature as shown in left figure.

Higher Voltage

If voltage is higher than standard value, check ground of brushes. If brushes are not grounded, replace IC regulator.

Lower Voltage

If voltage is below or in standard value, increase engine speed up to 2000 – 2500 rpm soon after starting engine, and read maximum value on ammeter immediately.
If current is less than 49 A, repair or replace generator.

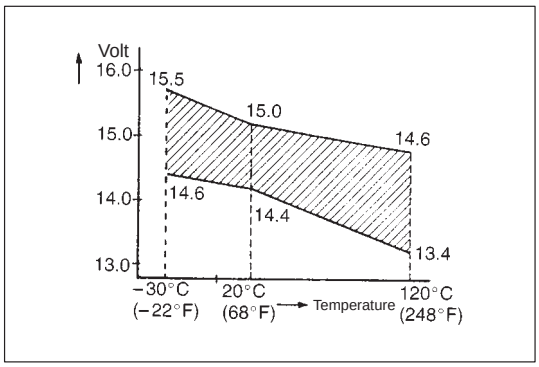

OVERCHARGED BATTERY

1) To determine battery condition, refer to BATTERY section.
2) If obvious overcharge condition exists as evidenced by excessive spewing of electrolyte, measure generator B terminal voltage at engine 2000 rpm.
3) If measured voltage is higher than upper limit value, proceed to disassembly section of generator service.
4) Check ground of brushes. If brushes are not grounded, replace IC regulator. Then check field coil for grounds and shorts, referring to “INSPECTION” section.

UNIT REPAIR OVERHAUL

GENERATOR

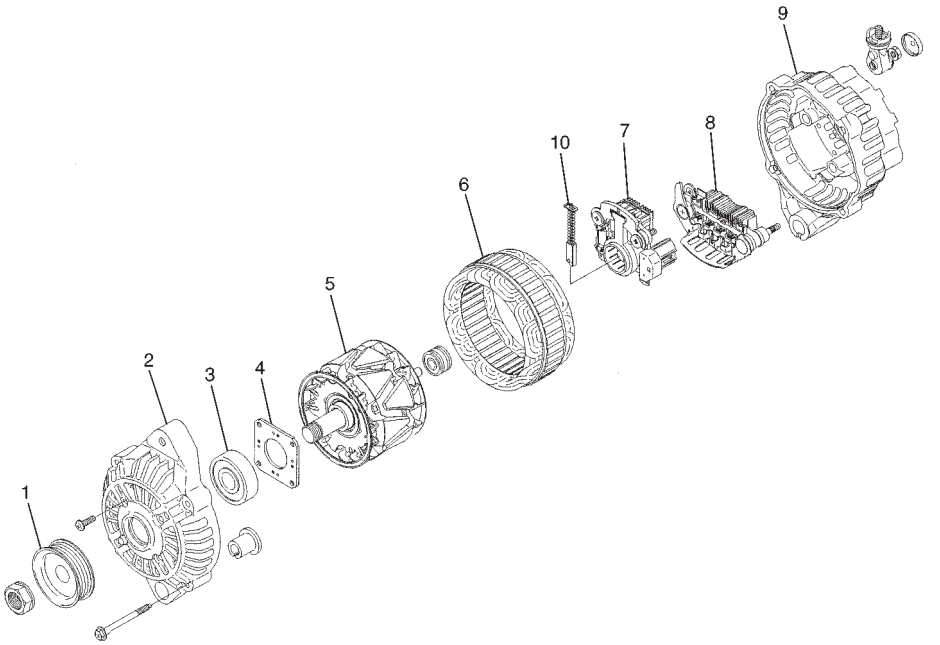

1. Pulley
2. Front housing
3. Bearing
4. Retainer
5. Rotor
6. Stator
7. IC regulator
8. Rectifier
9. Rear housing
10. Brush

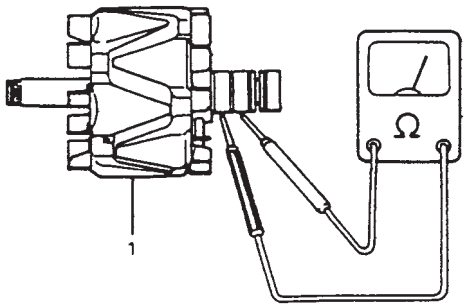

1. Rotor

INSPECTION

Rotor

1) Using ohmmeter, check for continuity between slip rings of rotor. If there is no continuity, replace rotor.

   Standard resistance: 1.8 – 2.1 Ω

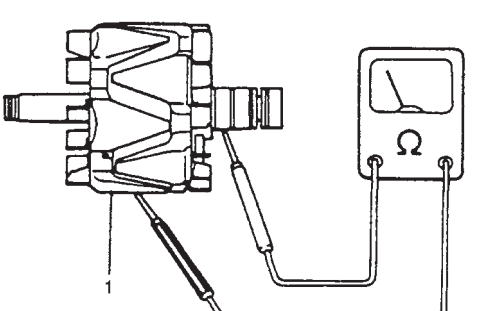

1. Rotor

2) Using ohmmeter, check that there is no continuity between slip ring and rotor core. If there is continuity, replace rotor.
3) Check slip rings for roughness or scoring. If rough or scored, replace rotor.

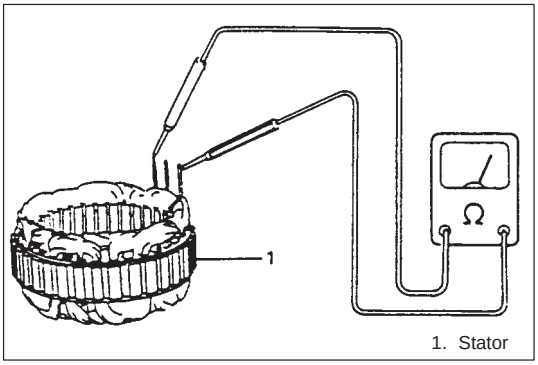

1. Stator

Stator

1) Using ohmmeter, check all leads for continuity.
   If there is no continuity, replace stator.

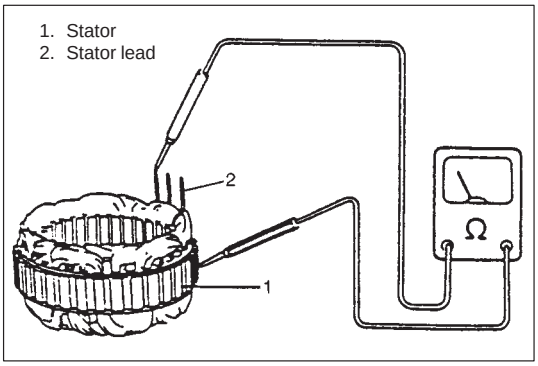

1. Stator
2. Stator lead

2) Using ohmmeter, check that there is no continuity between coil leads and stator core. If there is continuity, replace stator.

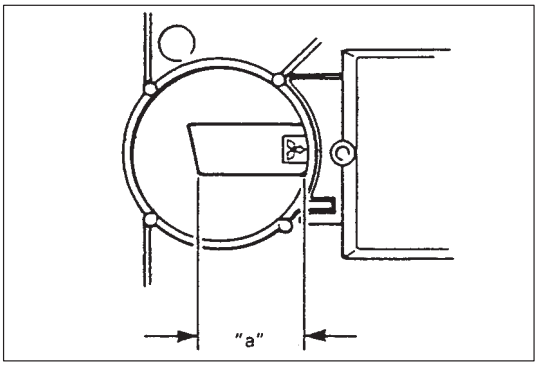

Brush and brush holder

Check each brush for wear by measuring its length.
If brush is found worn down to service limit, replace brush.

Brush length "a"
Standard : 16 mm (0.63 in.)
Service limit : 2 mm (0.08 in.)

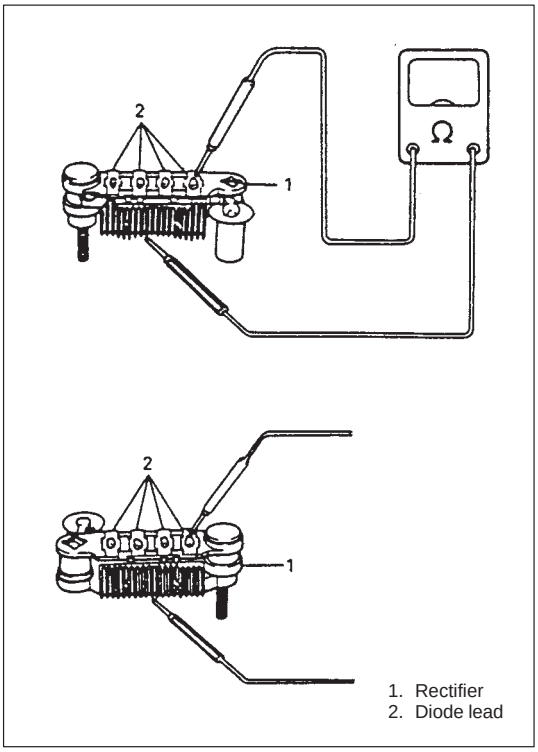

1. Rectifier
2. Diode lead

Rectifier

1) Using ohmmeter, check continuity between each of upper and lower rectifier bodies and each diode lead.
   Check both directions by reversing probes of ohmmeter and there should be only one-way continuity in each case.
   If check result is not satisfactory, replace rectifier.

SPECIFICATIONS

GENERATOR

Type	70 A type
Rated voltage	12 V
Nominal output	70 A
Permissible max. speed	18000 r/min.
No-load speed	1300 r/min (rpm)
Setting voltage	14.4 to 15.0 V
Permissible ambient temperature	–30 to 90°C (–22 to 194°F)
Polarity	Negative ground
Rotation	Clockwise viewed from pulley side

TIGHTENING TORQUE SPECIFICATIONS

Fastening	Tightening torque		
	N·m	kg-m	lb-ft
● Body ground bolt	8	0.8	6.0
● Generator mounting bolts and nut	23	2.3	16.5
● “B” terminal inner nut	4.2	0.42	3.0
● “B” terminal outer nut	8	0.8	6.0
● Pulley nut	118	11.8	85.5
● Rear end frame nuts	4.5	0.45	3.5
● Rear end cover nuts			
● Rectifier “B” bolt	3.9	0.39	3.0
● Stator stud bolts	8.8	0.88	6.5
● Drive end bearing plate screws	2.6	0.26	2.0
● Rectifier screws	2.0	0.20	1.5
● Regulator and brush holder screws			
● Terminal plate bolt	3.8	0.38	3.0

SECTION 6K

EXHAUST SYSTEM

NOTE:
For the descriptions (items) not found in this section, refer to the same section of the Service Manual mentioned in FOREWORD of this manual.

ON-VEHICLE SERVICE

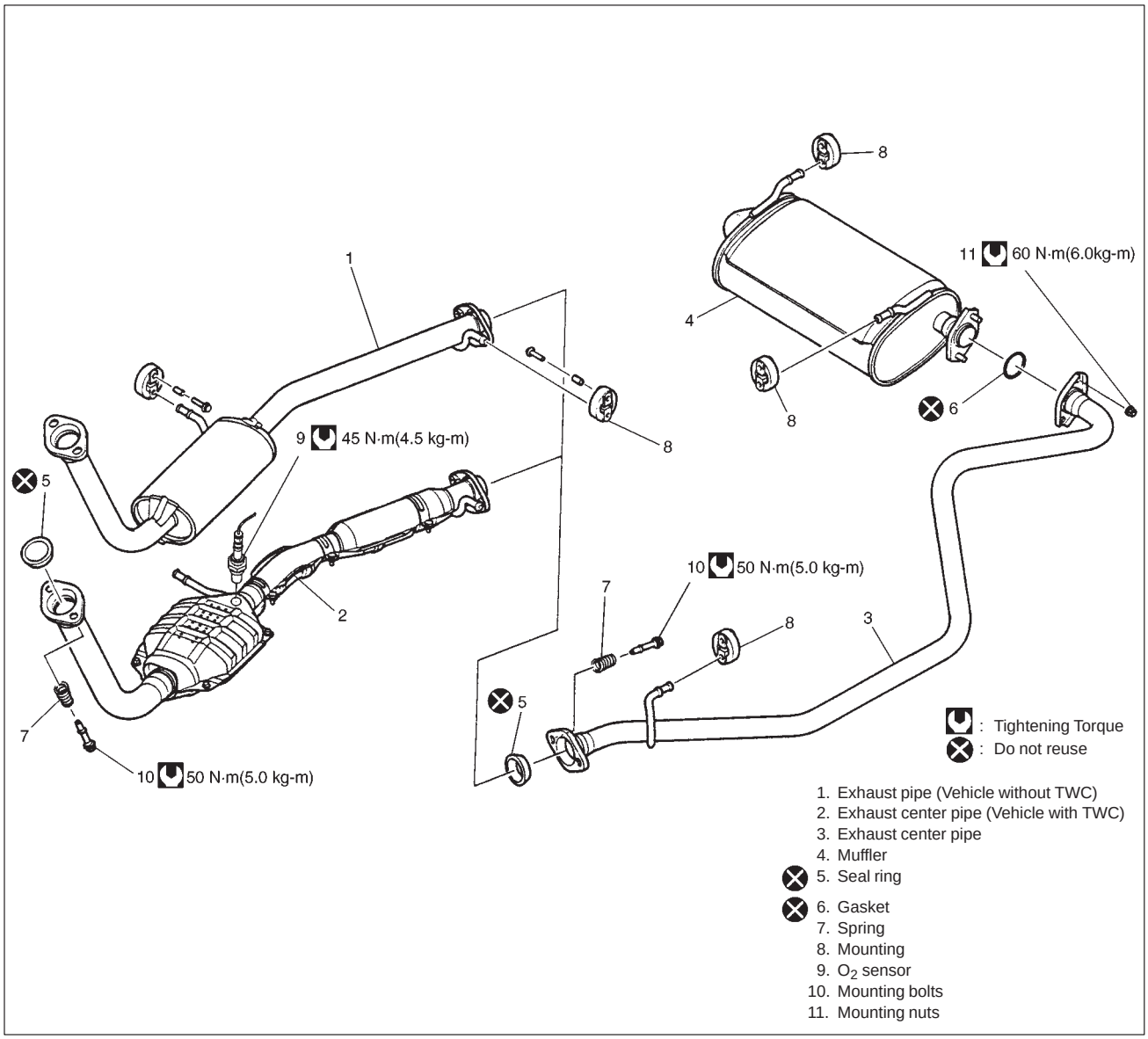

SECTION 7A

MANUAL TRANSMISSION

NOTE:
For the descriptions (items) not found in this section, refer to the same section of the Service Manual mentioned in FOREWORD of this manual.

CONTENTS

GENERAL DESCRIPTION 7A- 2

ON-VEHICLE SERVICE 7A- 4
- Maintenance Service 7A- 4
- Rear gear shift control 7A- 5

UNIT REPAIR OVERHAUL 7A- 7
- Dismounting of Transmission 7A- 7
- Remounting 7A- 8
- Disassembling Unit 7A- 8
- Assembling Unit 7A- 9
  - Front gear shift control 7A- 9

TIGHTENING TORQUE SPECIFICATIONS 7A-10

REQUIRED SERVICE MATERIALS 7A-10

SPECIAL TOOLS 7A-11

GENERAL DESCRIPTION

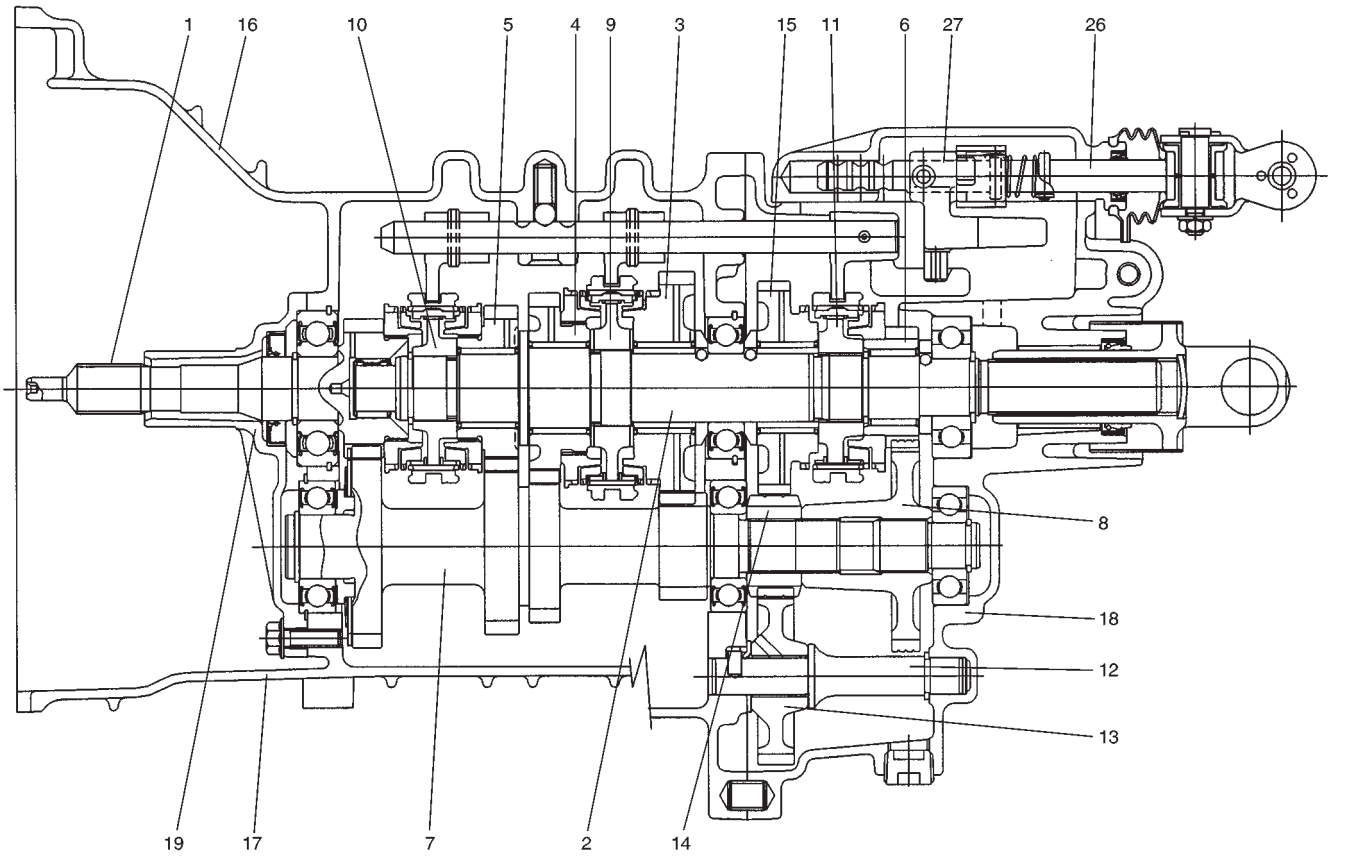

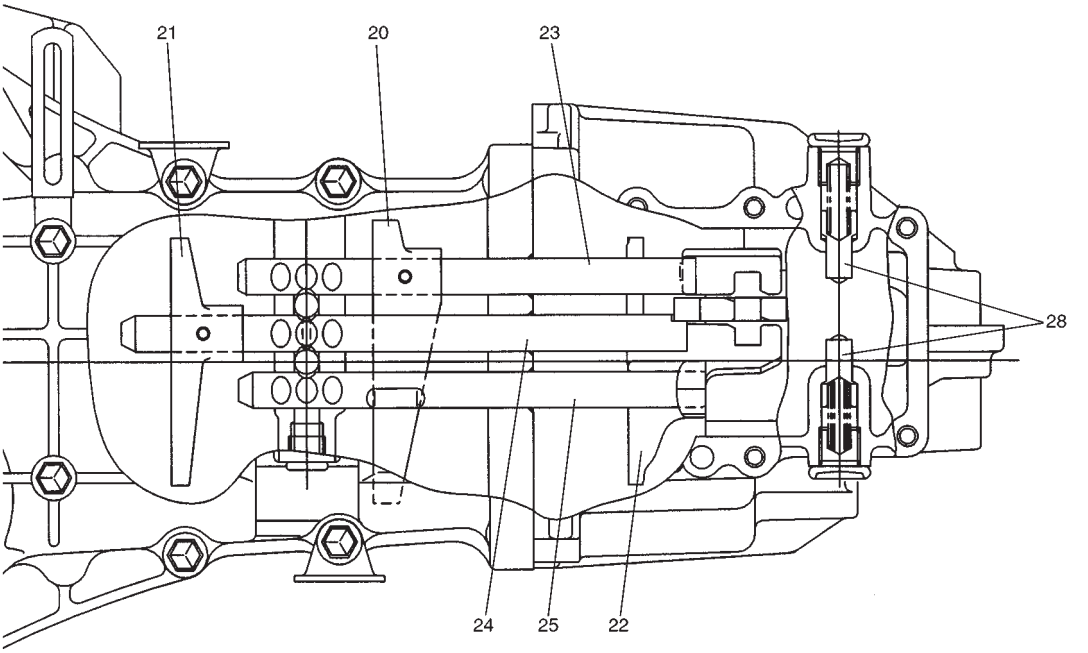

1. Input shaft
2. Main shaft
3. Main shaft low gear
4. Main shaft 2nd gear
5. Main shaft 3rd gear
6. Main shaft 5th gear
7. Countershaft
8. Countershaft 5th gear
9. Low speed synchronizer hub
10. High speed synchronizer hub
11. Reverse synchronizer hub
12. Reverse gear shaft
13. Reverse idle gear
14. Countershaft reverse gear
15. Main shaft reverse gear
16. Upper case
17. Lower case
18. Extension case
19. Input shaft bearing retainer
20. Low speed gear shift fork
21. High speed gear shift fork
22. Reverse gear shift fork
23. Low speed gear shift shaft
24. High speed gear shift shaft
25. Reverse gear shift shaft
26. Gear shift front shaft
27. Gear shift front arm
28. Select guide pin

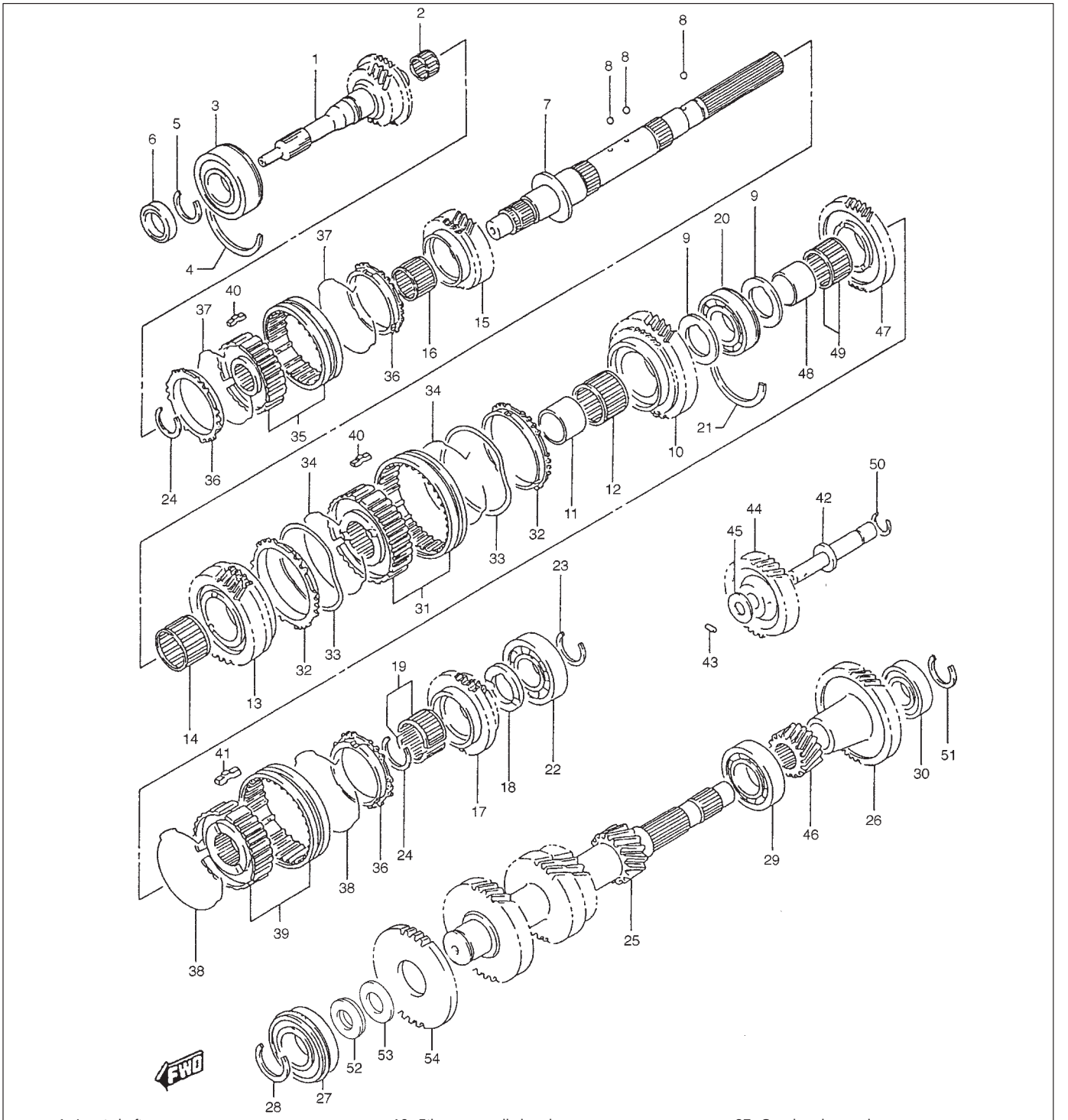

1. Input shaft
2. Input shaft bearing
3. Front bearing
4. C-ring
5. Circlip
6. Oil seal
7. Main shaft
8. Main shaft washer ball
9. Main shaft bearing washer
10. Low gear
11. Gear bush
12. Needle bearing
13. 2nd gear
14. Needle bearing
15. 3rd gear
16. 3rd gear needle bearing
17. 5th gear
18. 5th gear washer
19. 5th gear needle bearing
20. Main shaft bearing
21. C-ring
22. Main shaft rear bearing
23. Circlip
24. Circlip
25. Countershaft
26. Countershaft 5th gear
27. Front bearing
28. Circlip
29. Center bearing
30. Rear bearing
31. Low speed synchronizer hub ass'y
32. Low speed synchronizer ring
33. Low speed synchronizer spring
34. Synchronizer spring
35. High speed synchronizer hub ass'y
36. High speed synchronizer ring
37. Synchronizer spring
38. Synchronizer spring
39. Reverse synchronizer hub ass'y
40. Synchronizer key
41. Synchronizer key
42. Reverse gear shaft
43. Pin
44. Reverse idle gear
45. Washer
46. Countershaft reverse gear
47. Main shaft reverse gear
48. Gear bush
49. Needle bearing
50. Snap ring
51. Circlip
52. Friction gear retainer
53. Friction spring
54. Friction gear

ON-VEHICLE SERVICE

MAINTENANCE SERVICE

OIL CHANGE

1) Before changing or inspecting oil, be sure to stop engine and lift vehicle horizontally.
2) With vehicle lifted up, check oil level and leakage. If leakage exists, correct or repair it.

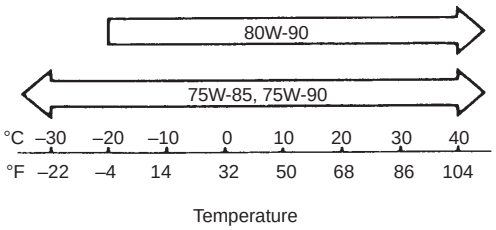

3) Drain old oil and fill new specified oil as shown below by specified amount (roughly up to level hole).
   NOTE:
   - **It is highly recommended to use SAE 75W–90 gear oil.**
   - **Whenever vehicle is hoisted for any service work other than oil change, also be sure to check for oil leakage.**
   - **If water or rust is mixed in drained oil, be sure to check boot of transmission.**

   Gear Oil Specification
   Oil grade: API GL-4
   Viscosity: SAE 75W–85, 75W–90 or 80W–90

   Oil Capacity:
   Transmission 1.3 liters (2.75/2.29 US/Imp. pt)

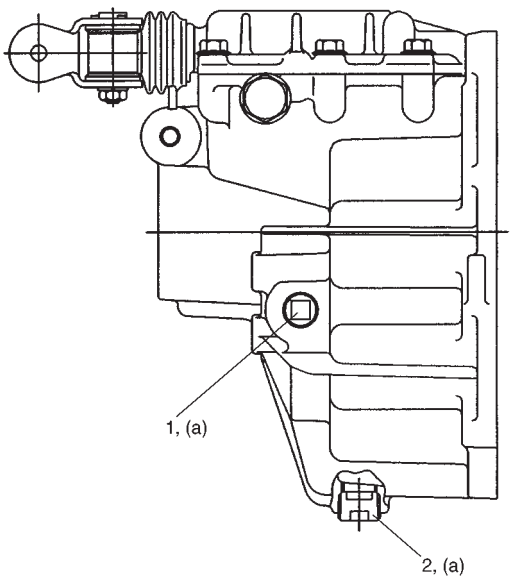

1. Oil filler plug
2. Oil drain plug

4) Torque drain plug and level/filler plug as specified below after applying sealant to its thread.

> **CAUTION:**
> **Transmission oil must not be poured through gear shift control lever part.**

Sealant 99000-31110

Tightening Torque
(a): 23 N·m (2.3 kg-m, 17.0 lb-ft)

REAR GEAR SHIFT CONTROL

1. Gear shift knob
2. Gear shift lever
3. Gear shift lever boot No.1
4. Gear shift lever boot No.2
5. Gear shift lever boot No.3
6. Gear shift lever boot cover
7. Gear shift lever plate
8. Gear shift control lower seat
9. Gear control select bolt
10. Gear shift lever case
11. Gear shift rear shaft
12. Extension rod
13. Gear shift control seat spring

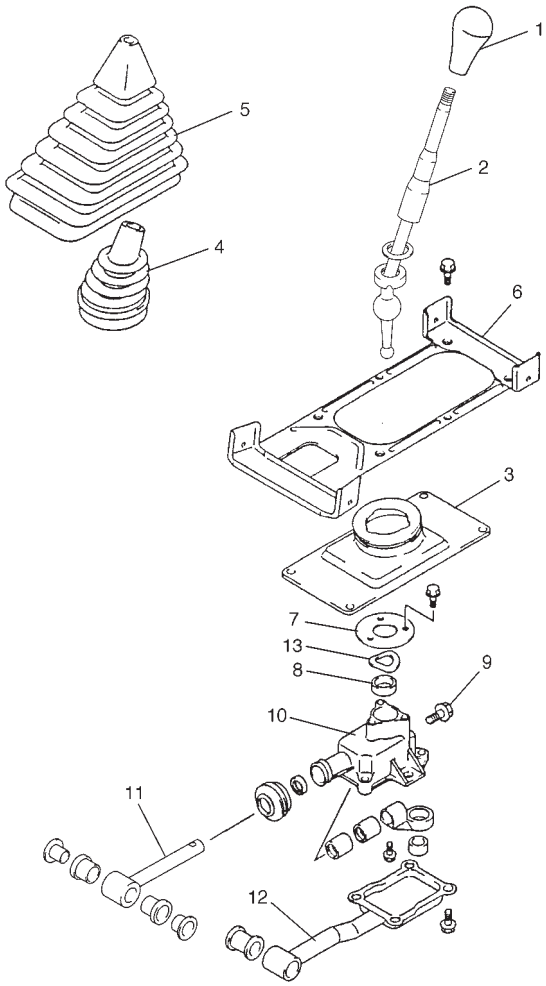

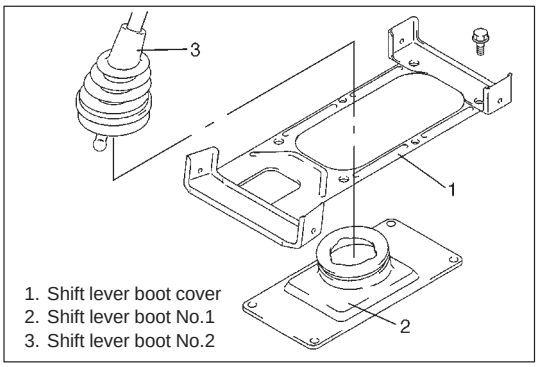

1. Shift lever boot cover
2. Shift lever boot No.1
3. Shift lever boot No.2

REMOVAL

1) Remove shift knob and remove center console box with shift lever boot No.3.
2) Pull out shift lever boot No.2 and remove shift lever boot cover and shift lever boot No.1.

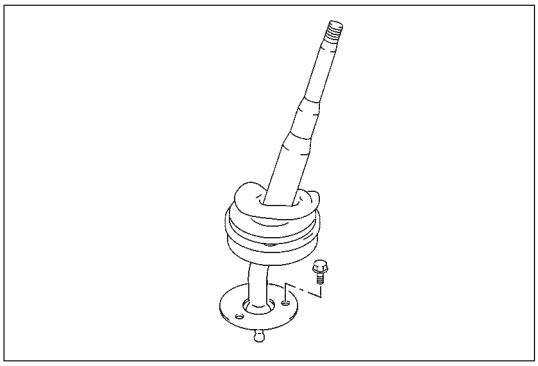

3) Remove 3 bolts, and then remove shift lever case plate and shift lever.

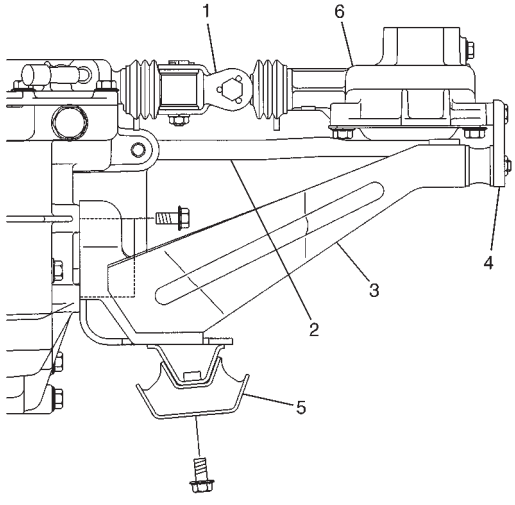

1. Gear shift control joint
2. Extension rod
3. Rear mounting bracket
4. Gear shift case mounting bracket
5. Engine rear mounting
6. Rear gear shift control assembly

4) Hoist vehicle and drain transmission oil.
5) Remove exhaust No.1 pipe, refer to Section 6K.
6) Remove propeller shaft No.1 (and No.2, if equipped for 4WD), refer to Section 4B.
7) Remove gear shift control joint bolt and extension rod bolt.
8) Apply transmission jack and remove rear mounting bracket with gear shift case mounting bracket and engine rear mounting.
9) Remove rear gear shift control assembly.

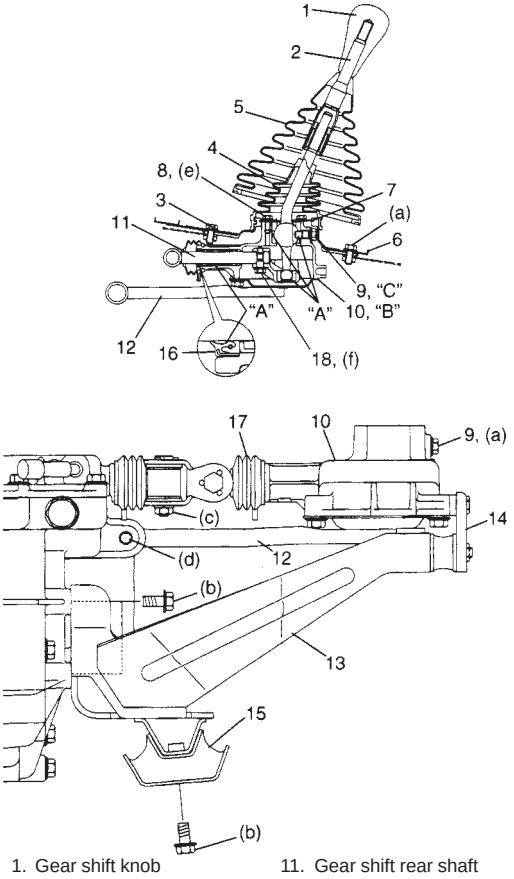

1. Gear shift knob
2. Gear shift lever
3. Gear shift lever boot No.1
4. Gear shift lever boot No.2
5. Gear shift lever boot No.3
6. Gear shift lever boot cover
7. Gear shift lever plate
8. Gear shift lever plate bolt
9. Gear control select bolt
10. Gear shift lever case
11. Gear shift rear shaft
12. Extension rod
13. Rear mounting bracket
14. Gear shift case mounting bracket
15. Engine rear mounting
16. Oil seal
17. Boot
18. Gear shift rear arm bolt

INSPECTION

- Check that gear shift control lever moves smoothly without abnormal noise.
- Check bushes and boot for damage and deterioration.

INSTALLATION

Install in reverse order of removal procedure noting following points.

"A": Grease 99000-25010
"B": Sealant 99000-31110
"C": Thread lock 99000-32020

- Press fit oil seal, referring to figure for installing direction.
- Make breather of boot face downward as shown in figure.
- Torque bolts to specifications, as given below.

Tightening Torque
(a): 23 N·m (2.3 kg-m, 17.0 lb-ft)
(b): 25 N·m (2.5 kg-m, 18.0 lb-ft)
(c): 18 N·m (1.8 kg-m, 13.0 lb-ft)
(d): 35 N·m (3.5 kg-m, 25.5 lb-ft)
(e): 5.5 N·m (0.55 kg-m, 4.0 lb-ft)
(f): 18 N·m (1.8 kg-m, 13.0 lb-ft) (For 6 mm bolt)
34 N·m (3.4 kg-m, 24.5 lb-ft) (For 8 mm bolt)

NOTE:
Do not reuse for gear shift rear arm bolt whose size is 6 mm.

- When installing propeller shaft(s), refer to Section 4B.
- When installing exhaust No.1 pipe, refer to Section 6K.
- After connect clutch cable, adjust clutch pedal free travel, refer to Section 7C.

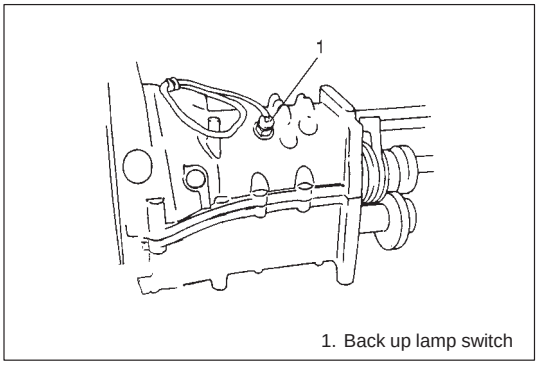

1. Back up lamp switch

UNIT REPAIR OVERHAUL

DISMOUNTING OF TRANSMISSION

1) Disconnect negative cable at battery.
2) Remove shift lever and rear gear shift control assembly, refer to steps 1) to 9) of REAR GEAR SHIFT CONTROL REMOVAL in this section.
3) Disconnect back up lamp switch lead wire at coupler respectively.
4) Remove starting motor from transmission case, refer to STARTING MOTOR REMOVAL of Section 6G.

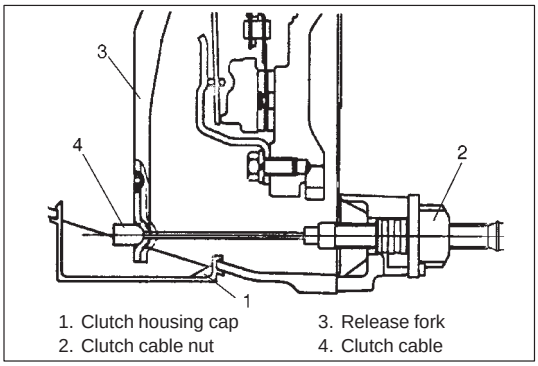

1. Clutch housing cap
2. Clutch cable nut
3. Release fork
4. Clutch cable

5) Remove clutch housing cap and disconnect clutch cable from clutch release fork.

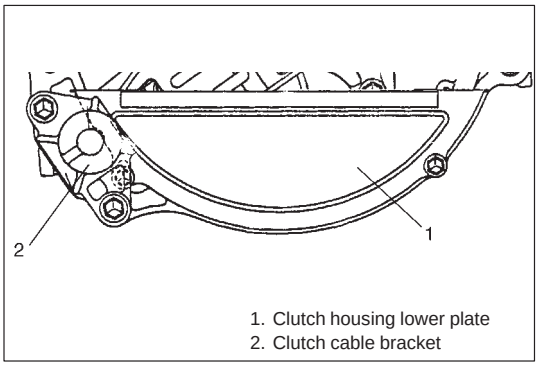

1. Clutch housing lower plate
2. Clutch cable bracket

6) Remove clutch cable bracket and remove clutch housing lower plate from transmission case.

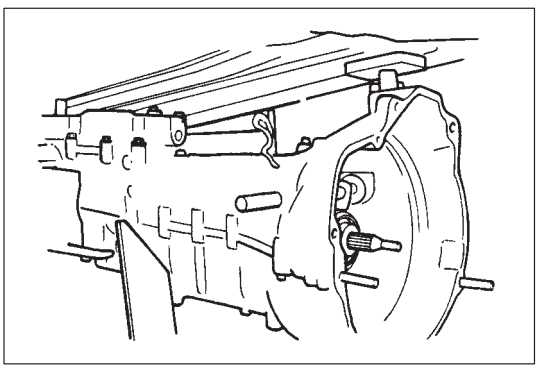

7) Remove bolts and nuts fastening engine cylinder block and transmission case and separate transmission from engine.
8) Take down transmission.

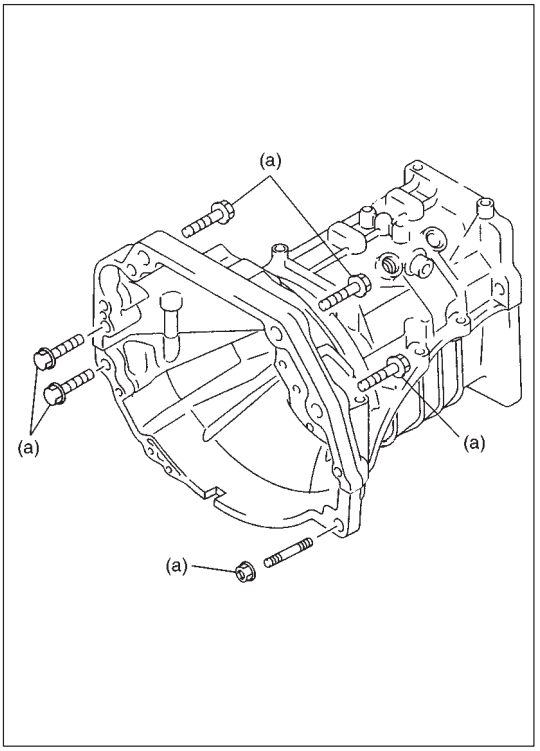

REMOUNTING

For remounting, reverse dismounting procedure.

- When installing flywheel, clutch cover and disc, refer to Section 7C.
  Use specified torques as given below.

  Tightening Torque
  (a): 94 N·m (9.4 kg-m, 68.0 lb-ft)

- For tightening torques not mentioned above, refer to TIGHTENING TORQUE SPECIFICATION at the end of this section.
- Connecting clutch cable, refer to Section 7C in this manual for details.
- When installing starting motor, refer to Section 6G in this manual for details.
- When installing rear gear shift control assembly and shift lever, refer to REAR GEAR SHIFT CONTROL INSTALLATION in this section.
- Fill transmission oil according to MAINTENANCE SERVICE in this section.

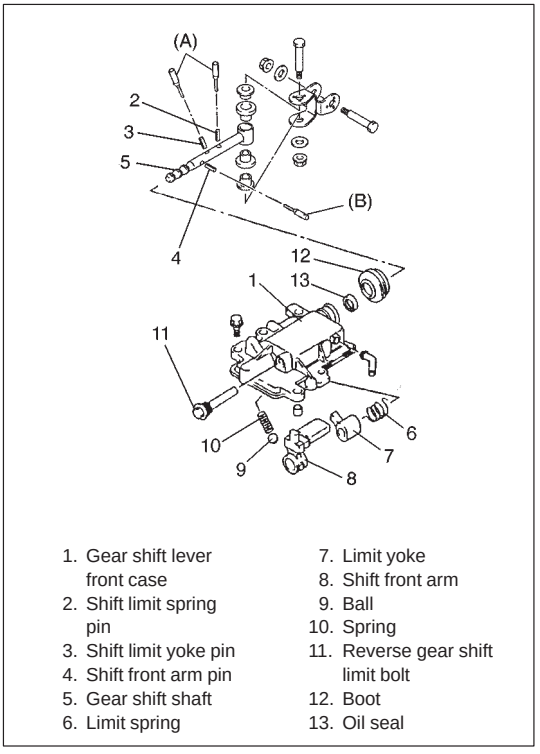

1. Gear shift lever front case
2. Shift limit spring pin
3. Shift limit yoke pin
4. Shift front arm pin
5. Gear shift shaft
6. Limit spring
7. Limit yoke
8. Shift front arm
9. Ball
10. Spring
11. Reverse gear shift limit bolt
12. Boot
13. Oil seal

DISASSEMBLING UNIT

FRONT GEAR SHIFT CONTROL

1) Remove gear shift lever front case.
2) Remove reverse gear shift limit bolt.
3) Remove shift front arm pin, shift limit spring pin and shift limit yoke pin by using special tools.

   Special Tool
   (A): 09922-85811
   (B): 09925-78210

4) Pull out gear shift shaft, and then remove limit spring, limit yoke and shift front arm.

   NOTE:
   Ball and spring will jump out when disconnecting gear shift shaft.

5) Remove boot and oil seal.

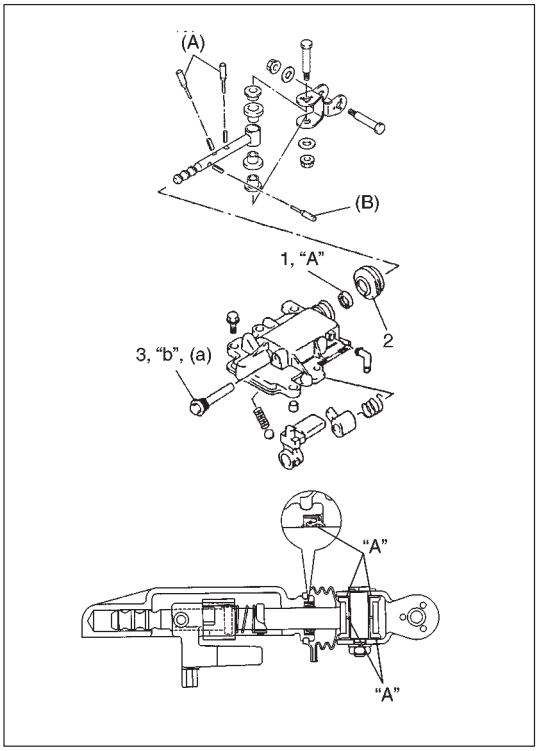

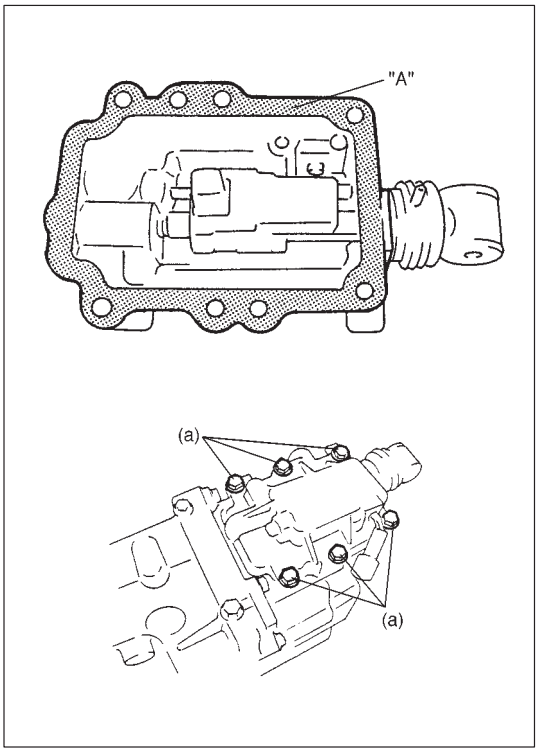

ASSEMBLING UNIT

FRONT GEAR SHIFT CONTROL

1) Clean all parts thoroughly, inspect them and replace with new ones as required.
2) Assemble component parts by reversing removal procedure.

Special Tools
(A): 09922-85811
(B): 09925-78210

- Apply grease to lip portion of oil seal. Refer to left figure for installing direction.

  "A": Grease 99000-25010

- Install boot in such direction that breather faces downward.
- Apply thread lock cement to reverse gear shift limit bolt and tighten it to specified torque.

  "B": Thread lock cement 99000-32110

  Tightening Torque
  (a): 23 N·m (2.3 kg-m, 17.0 lb-ft)

3) When installing gear shift lever front case to extension case, clean joint faces, and then apply sealant to joint faces.

   "A": Sealant 99000-31110

   Tightening Torque
   (a): 23 N·m (2.3 kg-m, 17.0 lb-ft)

TIGHTENING TORQUE SPECIFICATIONS

Be sure to torque each bolt and nut according to specification given below, whenever loosened.
If specified torque for particular bolt or nut is not included in the list, refer to Section 0A.

Fastening Parts	Tightening Torque		
	N·m	kg-m	lb-ft
Gear shift control boot cover bolt	23	2.3	17.0
Gear shift lever plate bolt	5.5	0.55	4.0
Extension rod joint bolt	35	3.5	25.5
Control shaft joint nut	18	1.8	13.0
Select return spring bolt	23	2.3	17.0
Gear shift lever front case bolt	23	2.3	17.0
Transmission case bolt	23	2.3	17.0
Extension case bolt	23	2.3	17.0
Transmission oil filler and drain plug	23	2.3	17.0
Input shaft bearing retainer bolt	23	2.3	17.0
Reverse gear shift limit bolt	23	2.3	17.0
Transmission to engine bolt and nuts	94	9.4	68.0
Transmission rear mounting bracket bolt	25	2.5	18.0
Transmission rear mounting bolt	25	2.5	18.0

REQUIRED SERVICE MATERIALS

MATERIALS	RECOMMENDED SUZUKI PRODUCTS	USE
Lithium grease	SUZUKI SUPER GREASE A (99000-25010)	● Oil seal lips ● Gear shift control lever ● Gear shift control shaft bushes
	SUZUKI SUPER GREASE I (99000-25210)	● Input shaft spline front end
Sealant	SUZUKI BOND NO.1215 (99000-31110)	● Oil drain and filler plug ● Mating surface of transmission case ● Mating surface of extension case ● Mating surface of input shaft bearing retainer ● Mating surface of gear shift lever case
Thread lock cement	THREAD LOCK 1333B (99000-32020)	● Reverse gear shift limit bolt ● Gear shift rear arm bolt

SPECIAL TOOLS

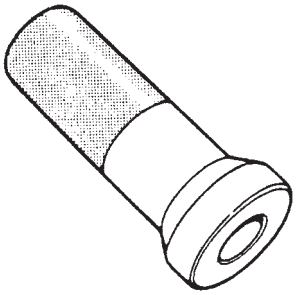

09951-16080
Bearing installer

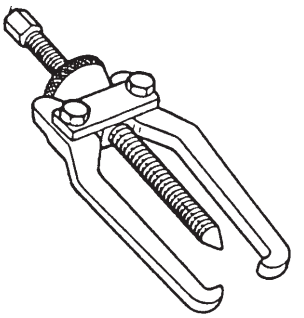

09913-65135
Bearing puller

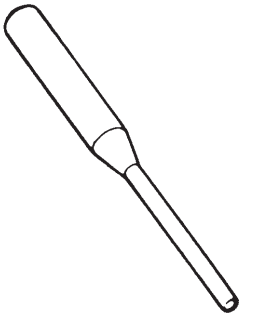

09922-85811
Spring pin remover

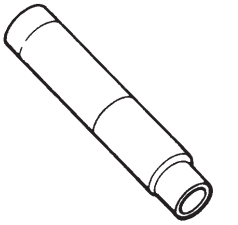

09925-18011
Bearing installer

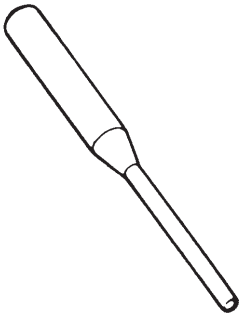

09925-78210
Spring pin remover

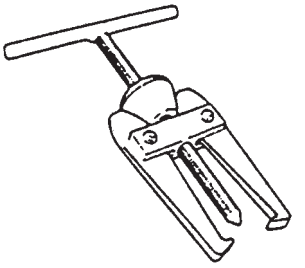

09913-60910
Bearing puller

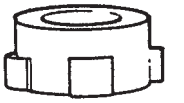

09927-08210
Shaft remover

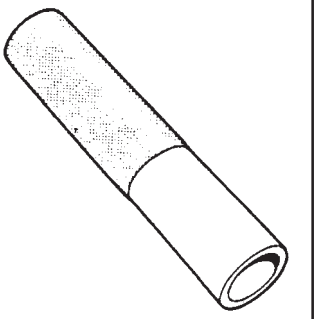

09913-80112
Bearing installer

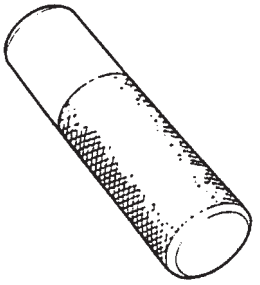

09913-84510
Bearing installer

SECTION 7B

AUTOMATIC TRANSMISSION (4 A/T)

WARNING:
For vehicles equipped with Supplemental Restraint (Air Bag) System

- **Service on and around the air bag system components or wiring must be performed only by an authorized SUZUKI dealer. Refer to "Air Bag System Components and Wiring Location View" under "General Description" in air bag system section in order to confirm whether you are performing service on or near the air bag system components or wiring. Please observe all WARNINGS and "Service Precautions" under "On-Vehicle Service" in air bag system section before performing service on or around the air bag system components or wiring. Failure to follow WARNINGS could result in unintentional activation of the system or could render the system inoperative. Either of these two conditions may result in severe injury.**
- **Technical service work must be started at least 90 seconds after the ignition switch is turned to the "LOCK" position and the negative cable is disconnected from the battery. Otherwise, the system may be activated by reserve energy in the Sensing and Diagnostic Module (SDM).**

NOTE:
For the descriptions (items) not found in this section, refer to the same section of the Service Manual mentioned in the FOREWORD of this manual.

CONTENTS

GENERAL DESCRIPTION 7B- 3
ELECTRONIC SHIFT CONTROL SYSTEM 7B- 4
DIAGNOSIS 7B- 9
Trouble Diagnosis Table 7B-13
Stall Test 7B-15
Time Lag Test 7B-16
Line Pressure Test 7B-16
Engine Brake Test 7B-17
"P" Range Test 7B-18
ELECTRONIC CONTROL SYSTEM DIAGNOSIS 7B-19
Precautions in Diagnosing Troubles 7B-19
Diagnostic Trouble Code(s) Check 7B-20
How to Clear Diagnostic Trouble Code(s) (DTC) 7B-22
Diagnostic Trouble Code (DTC) Table . . 7B-23
TCM Power and Ground Circuit Check . . 7B-25
DTC P0715 Input/Turbine Speed Sensor Circuit Malfunction 7B-26
DTC P0730 Incorrect Gear Ratio 7B-28
DTC P0753 Shift Solenoid-A Electrical . . 7B-30
DTC P0758 Shift Solenoid-B Electrical . . 7B-30
DTC P0763 Shift Solenoid-C Electrical . . 7B-30
DTC P0768 Shift Solenoid-D Electrical . . 7B-30
DTC P0743 TCC System Electrical 7B-30
DTC P0741 TCC Solenoid Performance of Stuck Off 7B-32
DTC P0720 Output Shaft Speed Sensor Circuit Malfunction 7B-33
DTC P1700 Throttle Position signal Input Malfunction 7B-35
DTC P0705 Transmission Range Sensor Circuit Malfunction 7B-37
DTC P0725 Engine Speed Input Circuit Malfunction 7B-39
DTC P0710 Transmission Temp. Sensor Circuit Malfunction 7B-41
DTC P1709 Engine Coolant Temp. Signal Circuit 7B-43
DTC P0702/P1702 Transmission Control System electrical or Internal Malfunction of TCM 7B-44
DTC P1887 Vehicle Speed Sensor Signal Circuit 7B-45
Inspection of TCM and Its Circuits 7B-46

ON-VEHICLE SERVICE 7B-48
MAINTENANCE SERVICE 7B-48
Fluid Level 7B-48
Fluid Change intervals 7B-49
Changing Fluid 7B-49
TRANSMISSION UNIT REPAIR OVERHAUL 7B-50
DISMOUNTING 7B-50
REMOUNTING 7B-51
UNIT ASSEMBLY 7B-52
TIGHTENING TORQUE SPECIFICATIONS 7B-53
SPECIAL TOOLS 7B-54
REQUIRED SERVICE MATERIALS 7B-56

GENERAL DESCRIPTION

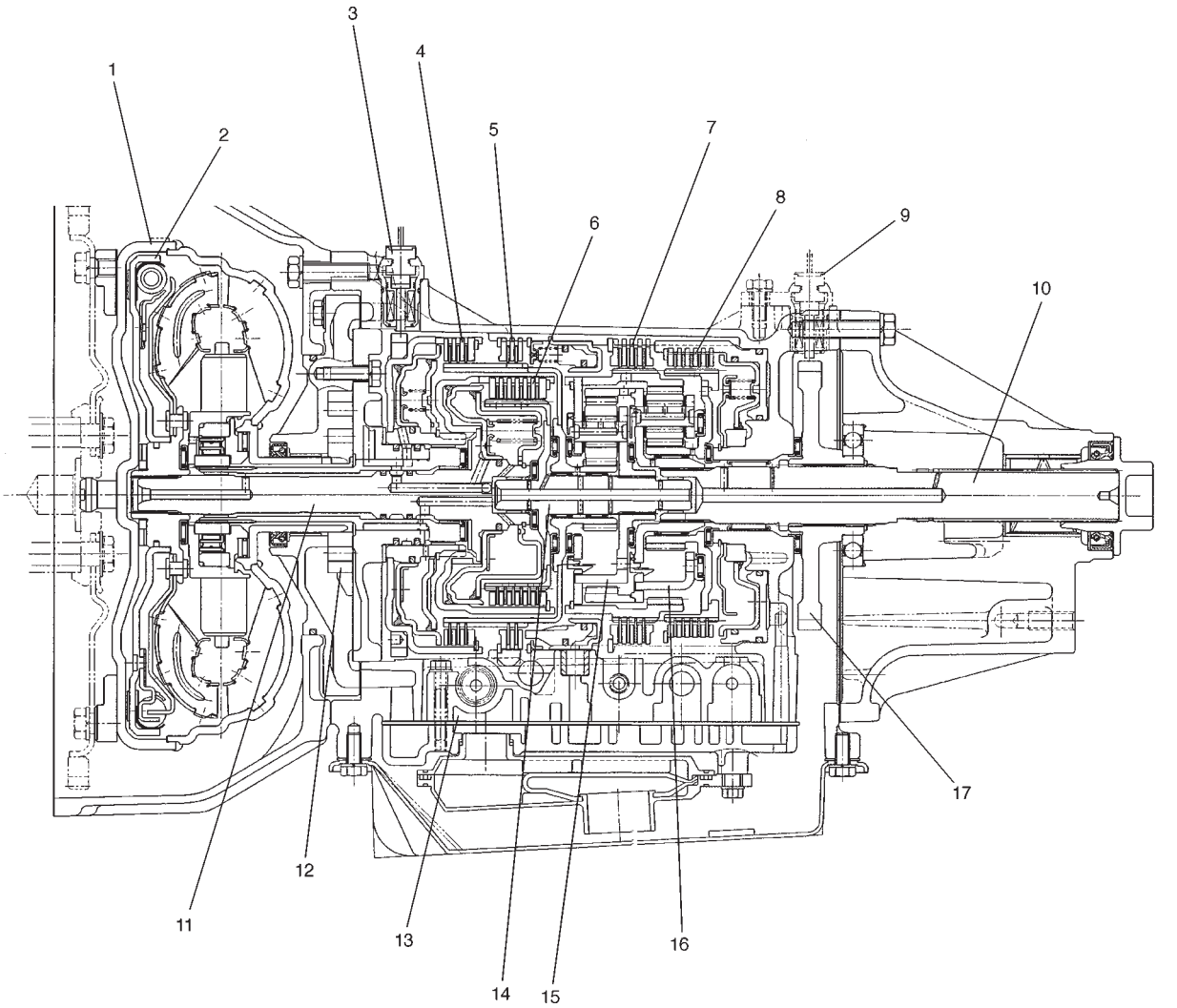

1. Torque converter
2. Torque converter clutch (Lock-up clutch)
3. Input/Turbine speed sensor (Turbine rev. sensor)
4. Front clutch (C1)
5. Overdrive brake
6. Rear clutch (C2)
7. Reverse brake
8. 1st and 2nd brake
9. Output shaft speed sensor (A/T vehicle speed sensor)
10. Output shaft
11. Input shaft
12. Oil pump
13. Valve body
14. Intermediate shaft
15. Front carrier
16. Rear carrier
17. Parking gear

ELECTRONIC SHIFT CONTROL SYSTEM

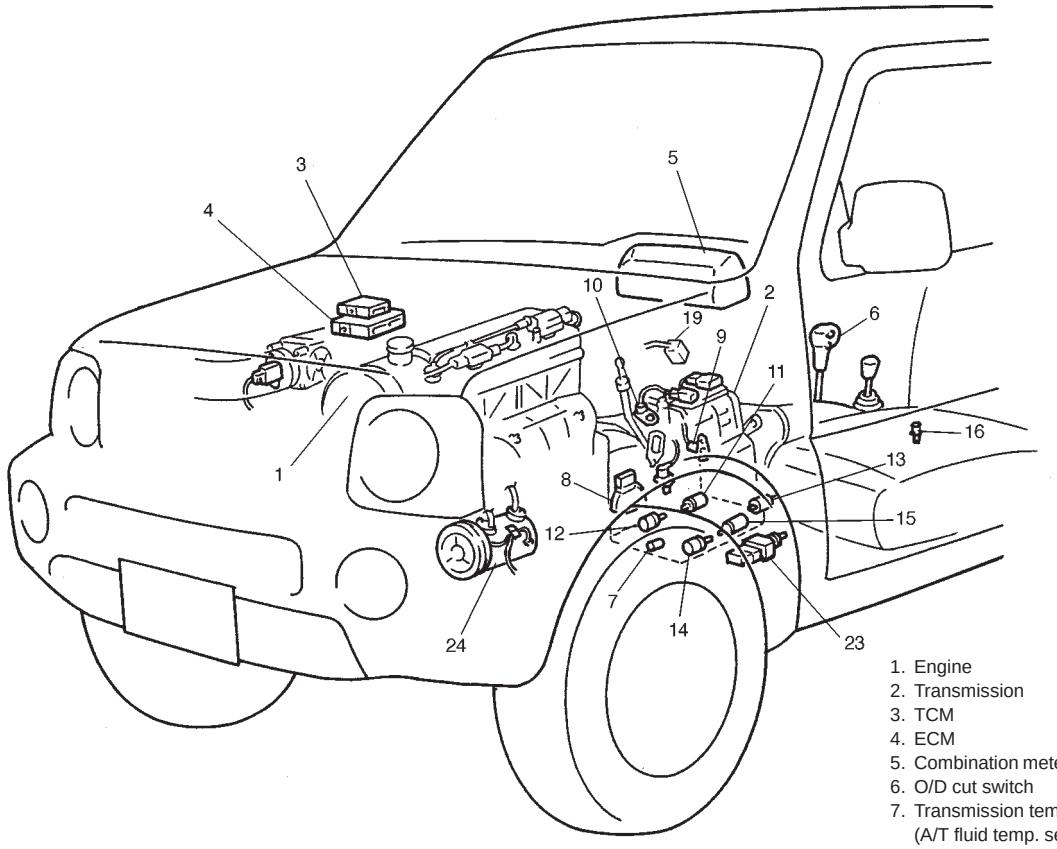

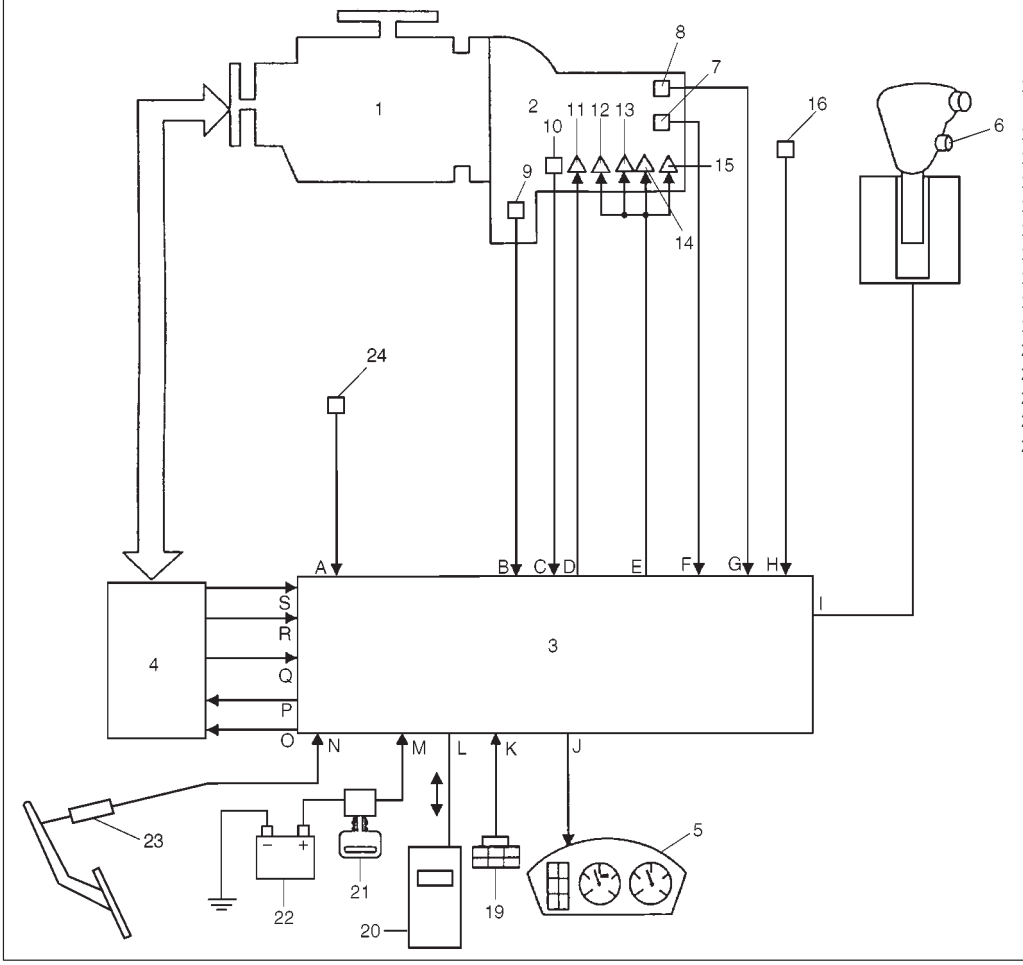

1. Engine
2. Transmission
3. TCM
4. ECM
5. Combination meter (O/D OFF lamp)
6. O/D cut switch
7. Transmission temp. sensor (A/T fluid temp. sensor)
8. Transmission range sensor (Shift switch)
9. Output shaft speed sensor (A/T VSS)
10. Input/Turbine speed sensor (Turbine rev. sensor)
11. TCC solenoid (Lock-up solenoid)
12. Shift solenoid-A (Shift solenoid No.1)
13. Shift solenoid-B (Shift solenoid No.2)
14. Shift solenoid-C (Shift solenoid No.3)
15. Shift solenoid-D (Shift solenoid No.4)
16. Vehicle speed sensor (VSS)
17. Blank
18. Blank
19. Monitor connector No.2
20. SUZUKI scan tool
21. Ignition switch
22. Battery
23. Brake light switch
24. A/C compressor

A. A/C on signal
B. A/T output shaft speed signal
C. Turbine speed signal
D. TCC (lock-up) control signal
E. Shift control signal
F. A/T fluid temp. signal
G. Range signal
H. Vehicle speed signal
I. O/D OFF signal
J. O/D OFF lamp signal
K. Diagnosis switch signal
L. SUZUKI scan tool
M. Power supply
N. Brake signal
O. A/T failure signal
P. Idle up signal
Q. Throttle signal
R. Engine coolant temp. signal
S. Engine speed (rev.) signal

TRANSMISSION CONTROL MODULE (TCM)

The TCM is an electronic circuit component that controls gear shift, TCC lock-up and idle-up according to the signal from each sensor. It is a microcomputer consisting of an IC, transistor, diode, etc. It is installed behind glove box.

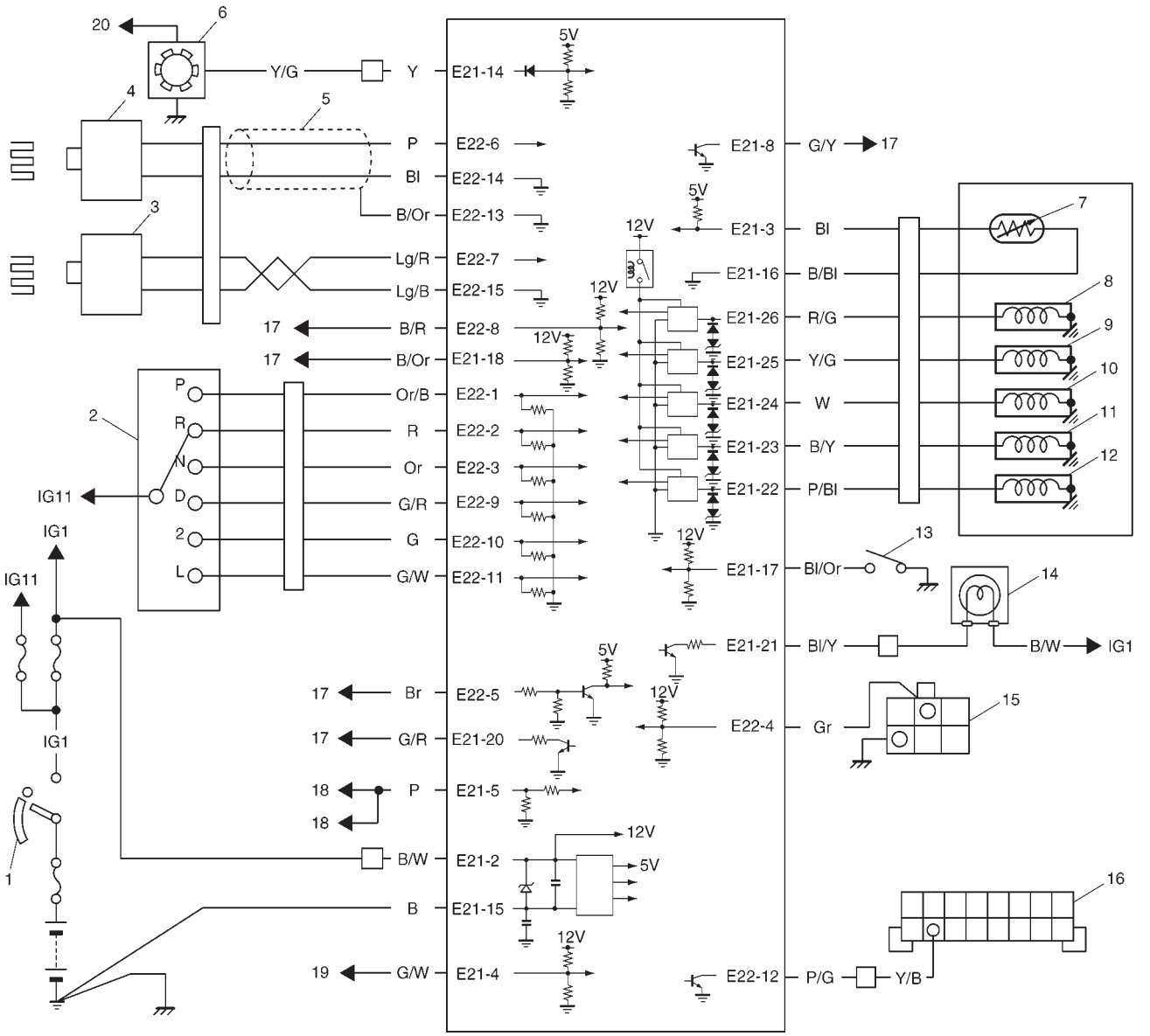

1. Ignition switch
2. Transmission range sensor (Shift switch)
3. Input/Turbine speed sensor (Turbine rev. sensor)
4. Output shaft speed sensor (A/T VSS)
5. Shield wire
6. Vehicle speed sensor (VSS)
7. Transmission temperature sensor (A/T fluid temp. sensor)
8. Shift solenoid-A (Shift solenoid No.1)
9. Shift solenoid-B (Shift solenoid No.2)
10. Shift solenoid-C (Shift solenoid No.3)
11. Shift solenoid-D (Shift solenoid No.4)
12. TCC solenoid (Lock-up solenoid)
13. "O/D" cut switch
14. "O/D OFF" lamp (in combination meter)
15. Monitor connector No.2
16. DLC
17. To ECM
18. To A/C
19. To brake lamp switch
20. To main relay

Terminal arrangement of TCM coupler (Viewed from harness side)

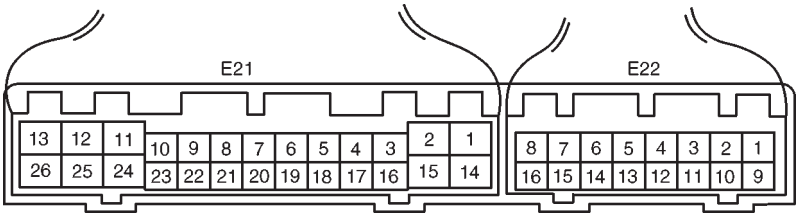

FAIL SAFE FUNCTION

This function is provided by the safe mechanism that assures safe driveability even when the solenoid valve, sensor or its circuit fails.

The table below shows the fail safe function for each fail condition of sensor, solenoid or its circuit.

Area	Detecting condition	Fail safe function
Input/Turbine speed sensor circuit (DTC P0715)	Input/Turbine speed sensor signal voltage is too high or too low.	● When vehicle running and in shift change by automatic electronic control, gear is fixed to gear which is going to be selected and lock-up function is turned OFF. ● When vehicle running and in no shift change, gear is fixed to gear right before the trouble occurred and lock-up function is turned OFF. ● When vehicle is at stop after or during detecting trouble, or in shift change by manual operation while running, gear is fixed as the followings and lock-up function is turned OFF. "P" range → P, "R" range → R, "N" range → N, "D" range → 3rd, "2" range → 2nd, "L" range → 1st
Output shaft speed sensor circuit (DTC P0720)	Output shaft speed sensor signal voltage is too high or too low.	
Shift solenoid (DTC P0753) (DTC P0758) (DTC P0763) (DTC P0768)	● Solenoid output voltage is too high although TCM orders solenoid to turn off. ● Solenoid output voltage is too low although TCM orders solenoid to turn on.	● When select lever is "P", "R", "N", "D" or "2" range, A/T power relay is turned OFF and gear is fixed as follows: "P" range → P, "R" range → R, "N" range → N, "D"/"2" range → 3rd ● When select lever is "L" range, gear is fixed to preprogrammed gear position of several patterns as follows: ● Malfunction of No.1 solenoid → 2nd or 3rd ● Malfunction of No.2 solenoid → 1st or 3rd ● Malfunction of No.3 solenoid → 3rd ● Malfunction of No.4 solenoid → 3rd ● Malfunction of 2 or more solenoids → 3rd
TCC circuit (DTC P0743)		Lock-up function is turned OFF.
A/T hardware itself (DTC P0730)	Difference in detected revolution between input/turbine speed sensor and output shaft speed sensor is too wide.	"P" range → P, "R" range → R, "N" range → N, "D"/"2"/"L" range → To be controlled as follows: (1) When detecting trouble at first, gear is selected well-suited gear calculated with parameters of each sensor's rev. number and gear position just when the trouble occurred. Lock-up function is turned OFF. (2) If A/T can transmit driving force under the above condition, gear is fixed the selected gear until ignition switch is turned OFF. (3) If A/T can not transmit driving force under the above condition, after once vehicle stop, gear which can transmit drive force is searched one by one until gear is found out. After gear is found out, position of gear is held until ignition switch is turned OFF.

Area	Detecting condition	Fail safe function
Transmission range sensor circuit (DTC P0705)	No shift switch signal is inputted or two or more shift switch signals are inputted at the same time.	● When vehicle running, shift range position is fixed to shift range position right before the trouble occurred until vehicle stop and lock-up function is turned OFF. ● When vehicle is at stop after or during detecting the trouble, gear is fixed as the followings and lock-up function is turned OFF. ● When 2 adjoining gear position signals are inputted. "P", "R" range → R, "R", "N" range → R, "N", "D" range → D, "D", "2" range → D, "2", "L" range → 2nd ● When 2 or more signals excepting above or no signal are inputted. "P" range → P, "R" range → R, "N" range → N, "D"/"2"/"L" range → 3rd
Transmission temperature sensor circuit (DTC P0710)	● A/T fluid temp. signal input voltage is too low. ● A/T fluid temp. signal input voltage does not go down although standard value of engine rev. signal is inputted.	● When detecting circuit open, TCM control as fluid temperature is 100°C (212°F). ● Lock-up function is turned OFF.
Engine speed input circuit (DTC P0725)	Inputted engine rev. signal is too low or too high.	● Engine rev. is processed as 4000 rpm. ● No compensation or judgement for gear shift control, for which engine rev. is considered, is processed. ● Lock-up function is turned OFF.
Engine coolant temp. signal circuit (DTC P1709)	O/D cut signal from ECM require O/D cut although A/T fluid temp. is normal operating temp. and engine rev. is standard.	O/D cut signal from ECM is not used even though engine coolant temperature is low.
Throttle position signal circuit (DTC P1700)	No or abnormal throttle opening signal is inputted.	● Scheduling of automatic gear shift is performed as throttle valve opening is 0%. ● Control of automatic gear shift (i.e. control of oil pressure) is performed as throttle valve opening is 100%. ● Coast down shifting is performed when brake is applied and engine rev. is less than 1,500 rpm. ● Lock-up function is turned OFF.

Area	Detecting condition	Fail safe function
Transmission control system electrical (DTC P0702)	Solenoid power supply relay output voltage is too high although TCM orders relay to turn off or relay output voltage is too low although TCM orders relay to turn on.	● When relay shorted, the gear is fixed as the followings and lock-up function is turned OFF. "P" range → P, "R" range → R, "N" range → N, "D" range → 3rd, "2" range → 2nd, "L" range → 1st ● When relay open, power supply to all solenoids is cut and the gear is fixed as the followings. Lock-up function is turned OFF. "P" range → P, "R" range → R, "N" range → N, "D"/"2"/"L" range → 3rd
Internal malfunction of TCM (DTC P1702)	Incorrect calculations of checking TCM programmed data indicated.	Power supply to all solenoid is cut and the gear is fixed as follows: "P" range → P, "R" range → R, "N" range → N, "D"/"2"/"L" range → 3rd

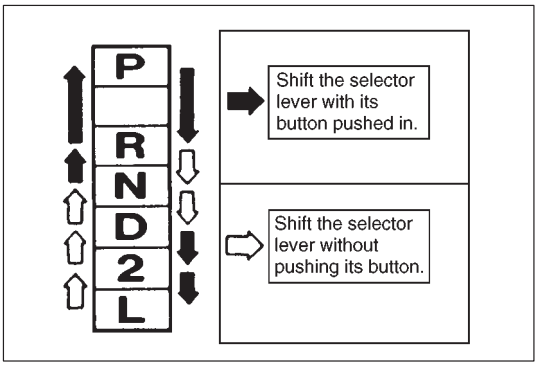

CHANGE MECHANISM

The same select pattern shift lever is used as the floor type and frequently used "N" and "D" ranges are made selectable freely.

DIAGNOSIS

This vehicle is equipped with an electronic transmission control system, which controls the automatic shift up and shift down timing, etc. suitably to vehicle driving conditions.
When diagnosing a trouble in the transmission including this system, follow "AUTOMATIC TRANSMISSION DIAGNOSTIC FLOW TABLE" given below to obtain correct result smoothly.

AUTOMATIC TRANSMISSION DIAGNOSTIC FLOW CHART

NOTE:
For the details of each step, refer to the following pages.

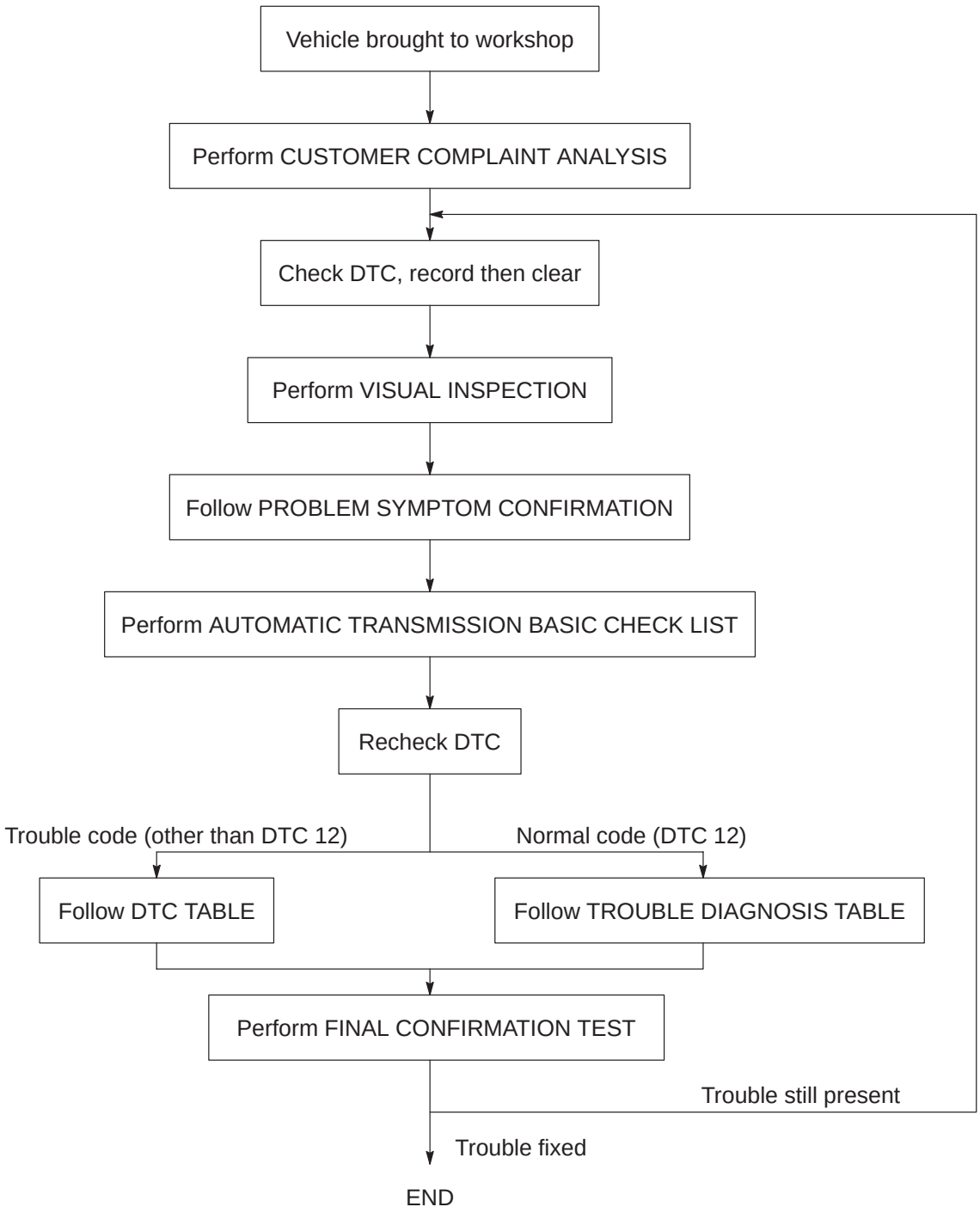

1. CUSTOMER COMPLAINT ANALYSIS

Record details of the problem (failure, complaint) and how it occurred as described by the customer. For this purpose, use of such a questionnaire form as shown below will facilitate collecting information to the point required for proper analysis and diagnosis.

CUSTOMER QUESTIONNAIRE (EXAMPLE)

User name:	Model:	VIN:	
Date of issue:	Date Reg.	Date of problem:	Mileage:

DESCRIPTION OF PROBLEM	
Engine does not start	Engine stops
Vehicle does not move (forward, rearward)	Transmission does not shift (1st, 2nd, 3rd, 4th, Rev) gear
No lock-up (TCC clutch operation)	Automatic shift does not occur
Shift point too high or too low	Transmission slipping in (1st, 2nd 3rd, 4th, Rev) gear
Excessive gear change shock	Other

VEHICLE/ENVIRONMENTAL CONDITION WHEN PROBLEM OCCURS	
Environmental Condition	
Weather	fair/cloudy/rain/snow/always/other( )
Temperature	hot/warm/cool/cold/( ) °C/always
Frequency	always/sometimes (times/ day, month)/only once
Road	urban/suburb/highway/mountainous (uphill/downhill)/tarmacadam/gravel/other( )
Vehicle Condition	
Transmission range	(P, R, N, D, 2, L) range/(→) range
Transmission temp.	cold/warming up phase/warmed up
Vehicle	at stop/during driving (constant speed/accelerating/decelerating/right hand corner/left hand corner)/other ( )/speed (km/h)
Engine	Speed (r/min)/throttle opening (idle/about %/full)
Brake	Apply/Not apply
“O/D OFF” switch	ON/OFF

MALFUNCTION INDICATOR LAMP FUNCTION
always ON/sometimes ON/not on
Diagnostic trouble code indicated/not indicated
Diagnostic trouble code recorded

NOTE:
The above form is a standard sample. It should be modified according to conditions characteristic of each market.

2. DIAGNOSTIC TROUBLE CODE (DTC) CHECK, RECORD AND CLEAR

DTCs are indicated by the malfunction indicator lamp. Refer to “DIAGNOSTIC TROUBLE CODE(S) CHECK” in this section. When a DTC is indicated by this lamp, it means existence of a malfunction in the system represented by that code but whether it still exists (current) or it occurred in the past and has gone (history) is unknown. To know it, clear this DTC once (Refer to “HOW TO CLEAR DIAGNOSTIC TROUBLE CODE(S)” in this section.), perform “TEST DRIVE” and/or “PROBLEM SYMPTOM CONFIRMATION” in this section and then check DTC again as described in “DIAGNOSTIC TROUBLE CODE(S) CHECK” in this section. Attempt to diagnose the trouble based on the DTC recorded in this step or failure to clear the DTC in this step may mislead the diagnosis or make diagnosing difficult. Even after checking the DTC with the SUZUKI scan tool, diagnosis should be performed according to this flow chart to check TCM for proper self-diagnosis function.

3. VISUAL INSPECTION

As a preliminary step, perform visual check of the following items that support proper function of the automatic transmission.

INSPECTION ITEM	REFERRING SECTION
● Engine oil ----- level, leakage	SECTION 0B
● Engine coolant ----- level, leakage	SECTION 0B
● A/T fluid ----- level, leakage, color	SECTION 0B
● Battery ----- fluid level, corrosion of terminal	
● A/T fluid hoses ----- disconnection, looseness, deterioration	
● Connectors of electric wire harness ----- disconnection, friction	SECTION 8
● Fuses ----- burning	SECTION 8
● Parts ----- installation, bolt ----- looseness	
● Parts ----- deformation	
● Other parts that can be checked visually	
Also add following items at engine start.	
● Indicator, warning lights in combination meter ----- ON (indicating abnormality in system) or OFF	SECTION 8
● Other parts that can be checked visually	

4. PROBLEM SYMPTOM CONFIRMATION

Check if what the customer claimed in CUSTOMER COMPLAINT ANALYSIS is actually found in the vehicle and if that symptom is found, whether it is identified as a failure. (This step should be shared with the customer if possible.)

When the symptom is not actually found, possibility is:

- The symptom occurs under certain conditions.
  ----- Retry with the vehicle under different conditions.
- The trouble occurred only temporarily and normal operation has been restored.
  ----- Perform “DIAGNOSTIC TROUBLE CODE CHECK” and if the diagnostic trouble code is indicated, inspect according to the flow table for that DTC.

5. AUTOMATIC TRANSMISSION BASIC CHECK

Perform basic automatic transmission check according to the list below first.

AUTOMATIC TRANSMISSION BASIC CHECK LIST

1. Power Supply Voltage Check
   Check that the battery voltage is within 10 – 14V at engine stop.
2. A/T Fluid Check
   Check A/T fluid level and quality.
3. STALL TEST
   Perform stall test. Refer to “STALL TEST” in this section for details.
4. LINE PRESSURE TEST
   Perform line pressure test. Refer to “LINE PRESSURE TEST” in this section.
5. ROAD TEST
   Perform road test to understand correctly the trouble area.
6. Electrical Harness and Coupler Check
   Check the connection of the harness coupler. Check for the loose connection of the harness, loose connection of the terminals.

5-1. DIAGNOSTIC TROUBLE CODE CHECK

Check diagnostic trouble code, referring to “DIAGNOSTIC TROUBLE CODE(S) CHECK” in this section.

5-2. DIAGNOSTIC TROUBLE CODE FLOW TABLE

Based on the DTC indicated in “DIAGNOSTIC TROUBLE CODE(S) CHECK”, locate the cause of the trouble, namely in a sensor, switch, wire harness, connector, actuator, TCM or other part and repair or replace faulty parts.

6. FINAL CONFIRMATION TEST

Confirm that the problem symptom has gone and the automatic transmission is free from any abnormal conditions. If what has been repaired is related to the malfunction DTC, clear the DTC once and perform test driving and confirm that a normal code is indicated.

TROUBLE DIAGNOSIS TABLE

NOTE:
For the inspection of throttle position sensor, refer to TP SENSOR in SECTION 6E of Service Manual mentioned in the FOREWORD of this manual.

Condition		Possible Cause	Correction
No up-shift	**1st → 2nd** **2nd → 3rd**	● A/T output shaft speed sensor or its circuit faulty	Inspect A/T output shaft speed sensor.
		● Shift solenoid-A (No.1) (1st → 2nd, 2nd → 3rd), -B (No.2) (1st → 2nd), -C (No.3) (2nd → 3rd) or its circuit faulty	Repair or replace.
		● TCM faulty	Replace TCM.
	3rd → 4th	● Transmission temp. sensor or its circuit faulty	Inspect Transmission temp. sensor.
		● A/T output shaft speed sensor or its circuit faulty	Inspect A/T output shaft speed sensor.
		● Shift solenoid-A (No.1), -D (No.4) or its circuit faulty	Repair or replace.
		● O/D CUT switch and/or ”O/D OFF” indicator light circuit faulty	Refer to ” O/D CUT SWITCH” in this section and/or inspect its circuit.
		● Engine coolant temp. sensor or its circuit faulty	Refer to ECT sensor in SECTION 6E.
		● TCM faulty	Replace TCM.
No down-shift	**4th → 3rd** **3rd → 2nd** **2nd → 1st**	● Shift solenoid-A (No.1) (4th → 3rd, 3rd → 2nd, 2nd → 1st), -B (No.2) (2nd → 1st), -C (No.3) (3rd → 2nd), -D (No.4) (4th → 3rd) or its circuit faulty	Repair or replace.
		● Throttle position sensor or its circuit faulty	Inspect TP sensor.
		● TCM faulty	Replace TCM.
Shift point too high or too low		● Throttle position sensor, A/T output shaft speed sensor or its circuit faulty	Inspect TP sensor and/or A/T output shaft speed sensor.
Vehicle does not move		● Shift solenoid-A (No.1), -B (No.2), -C (No.3) or its circuit faulty	Repair or replace.
Excessive slip		● Shift solenoid-A (No.1) to -D (No.4) or its circuit faulty	Repair or replace.
Excessive shock at N → D or N → R		● Shift solenoid-B (No.2), -C (No.3) or its circuit faulty	Repair or replace.
		● ECM (ISC)	Inspect ECM.
No lock-up or No lock-up OFF		● TCC (lock-up) solenoid valve or its circuit faulty	Repair or replace.
		● Throttle position sensor or its circuit faulty	Refer to throttle position sensor in SECTION 6E.
		● Engine coolant temp. sensor or its circuit faulty	Refer to ECT sensor in SECTION 6E.
		● Brake light switch circuit faulty	Repair or replace.
		● ECM faulty	Inspect ECM.

Condition		Possible Cause	Correction
Vehicle does not move at any range		● Manual valve faulty ● Primary regulator valve faulty	Clean or replace. Clean or replace.
No gear change	**1st ⇆ 2nd**	● Shift solenoid-A (No.1) and/or -B (No.2) stuck ● Signal valve faulty	Clean or replace. Clean or replace.
	2nd ⇆ 3rd	● Shift solenoid-A (No.1), -C (No.3) and/or fail valve No.1 stuck	Clean or replace.
	3rd ⇆ 4th	● Shift solenoid-A (No.1), -D (No.4) and/or fail valve No.2 stuck	Clean or replace.
Harsh engagement	**P, N → R**	● Rear clutch accumulator faulty	Clean or replace.
	N → D	● 1st & 2nd brake accumulator faulty	Clean or replace.
	1st → 2nd at D range or 2 range	● Rear clutch accumulator faulty	Clean or replace.
	2nd → 3rd at D range	● Front clutch accumulator faulty	Clean or replace.
	3rd → 4th at D range	● Overdrive brake accumulator faulty	Clean or replace.
	All gear change	● Primary regulator valve faulty	Clean or replace.
Excessive slip (low line pressure)		● Primary regulator valve faulty	Clean or replace.
Vehicle does not move at	**1st and 3rd gear**	● Front clutch faulty	Repair or replace.
	Reverse gear	● Reverse brake faulty	Repair or replace.
	2nd, 3rd, 4th and reverse gear	● Rear clutch faulty	Repair or replace.
	1st and 2nd gear	● 1st & 2nd brake faulty	Repair or replace.
	4th gear	● Overdrive brake faulty	Repair or replace.
	Any forward and reverse gear	● Parking lock pawl faulty	Repair or replace.
Shock or engine stalls when starting off and stopping		● Torque converter clutch faulty	Inspect and replace as necessary.
No up-shift	**1st→2nd**	● Rear clutch faulty	Repair or replace.
	2nd→3rd	● Front clutch faulty	Repair or replace.
	3rd→4th	● Overdrive brake faulty	Repair or replace.
No engine braking	**2nd or 3rd gear**	● Front or rear clutch or 1st & 2nd brake faulty	Repair or replace.
	L range 1st gear	● Front clutch or 1st & 2nd brake faulty	Repair or replace.
No lock-up		● Torque converter clutch faulty ● Lock-up control valve faulty ● Lock-up solenoid faulty ● Secondary regulator valve faulty ● Signal valve faulty	Inspect and replace as necessary. Clean or replace. Clean or replace. Clean or replace. Clean or replace.
No lock-up OFF		● TCC (lock-up) solenoid faulty ● Lock-up control valve faulty	Clean or replace. Clean or replace.



STALL TEST

This test is to check overall performance of automatic transmission and engine by measuring stall speed at "D" and "R" ranges. Be sure to perform this test only when transmission fluid is at normal operating temperature and its level is between FULL and LOW marks.

CAUTION:
- **Do not run engine at stall more than 5 seconds continuously, for fluid temperature may rise excessively high.**
- **After performing stall test, be sure to leave engine running at idle for longer than 30 seconds before another stall test.**

1) Apply parking brake and block wheels.
2) Install tachometer.
3) Start engine with select lever shifted to "P".
4) Depress brake pedal fully.
5) Shift select lever to "D" and depress accelerator pedal fully while watching tachometer. Read engine rpm quickly when it has become constant (stall speed).
6) Release accelerator pedal immediately after stall speed is checked.
7) In the same way, check stall speed in "R" range.
8) Stall speed should be within following specification.

Stall speed: 2,550 – 2,850 r/min

Test result	Possible cause
Lower than standard level	● Lack of engine output ● Defective torque converter
Higher than standard level in "D" range	● Malfunctioning 1st & 2nd brake ● Malfunctioning rear clutch ● Malfunctioning stator one-way clutch
Higher than standard level in "R" range	● Low line pressure ● Malfunctioning front clutch ● Malfunctioning reverse brake ● Malfunctioning stator one-way clutch

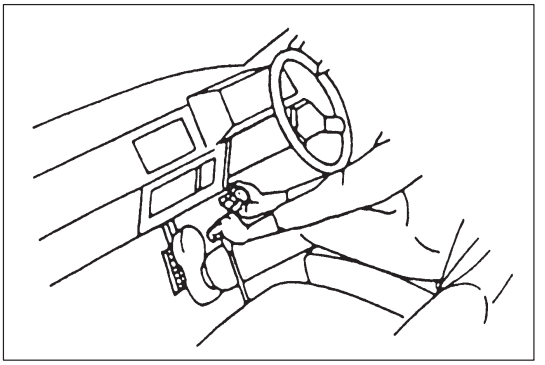

TIME LAG TEST

This test is to check conditions of clutch, reverse brake and fluid pressure. "Time lag" means time elapsed since select lever is shifted with engine idling till shock is felt.

1) With chocks placed in front and behind front and rear wheels respectively, depress brake pedal.
2) Start engine.
3) With stop watch ready, shift select lever from "N" to "D" range and measure time from that moment till shock is felt.
4) Similarly measure time lag by shifting select lever from "N" to "R" range.

Specification for time lag	"N"→"D"	Less than 1.0 sec.
	"N"→"R"	Less than 1.4 sec.

NOTE:

- **When repeating this test, be sure to wait at least minute after select lever is shifted back to "N" range.**
- **Engine should be warmed up fully for this test.**

Test result	Possible cause
When "N"→"D" time lag exceeds specification.	• Low line pressure • Worn front clutch • Worn 1st & 2nd brake
When "N"→"R" time lag exceeds specification.	• Low line pressure • Worn front clutch • Worn reverse brake

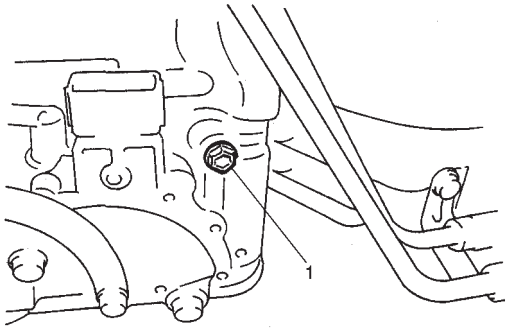

1. Fluid pressure check hole plug

LINE PRESSURE TEST

Purpose of this test is to check operating conditions of each part by measuring fluid pressure in fluid pressure line.
Line pressure test requires following conditions.

- Automatic fluid is at normal operating temperature (70 – 80°C/158 – 176°F).
- Fluid is filled to proper level (between FULL and LOW on dipstick).

1) Apply parking brake securely and place chocks against wheels.
2) Remove fluid pressure check hole plug bolt.
3) Attach oil pressure gauge to fluid pressure check hole in transmission case.

Special Tool
(A) : 09925-37810

CAUTION:
After attaching oil pressure gauge, check that no fluid leakage exists.

4) Depress foot brake fully, run engine at idle and stall then check fluid pressure in “D” or “R” range.

CAUTION:
Do not continue running engine at stall speed longer than 5 seconds.

Engine running mode	Line pressure	
	“D” range	“R” range
At idle speed	8.2 – 9.6 kg/cm^2 116.6 – 136.5 psi	13.0 –16.0 kg/cm^2 184.9 – 227.5 psi
At stall speed	8.2 – 9.6 kg/cm^2 116.6 – 136.5 psi	13.0 –16.0 kg/cm^2 184.9 – 227.5 psi

Test result	Possible cause
Line pressure higher than standard level in each range	● Malfunctioning regulator valve
Line pressure lower than standard level in each range	● Malfunctioning regulator valve ● Defective oil pump
Line pressure lower than standard level only in “D” range	● Fluid leakage from “D” range pressure circuit ● Fluid leakage from 1st & 2nd brake ● Fluid leakage from front clutch
Line pressure lower than standard level only in “R” range	● Fluid leakage from “R” range pressure circuit ● Fluid leakage from front clutch ● Fluid leakage from reverse brake

ENGINE BRAKE TEST

WARNING:
Before test, make sure that there is no vehicle behind so as to prevent rear-end collision.

1) While driving vehicle in 3rd gear of “D” range, shift select lever down to “2” range and check if engine brake operates.
2) In the same way as in Step 1), check engine brake for operation when select lever is shifted down to “L” range.
3) Engine brake should operate in above test.

Test result	Possible cause
Fails to operate when shifted down to “2” range	● Defective shift switch
Fails to operate when shifted down to “L” range	● 1st & 2nd brake defective ● Defective A/T

“P” RANGE TEST

1) Stop vehicle on a slope, shift select lever to “P” range and at the same time apply parking brake.
2) After stopping engine, depress brake pedal and release parking brake.
3) Then, release brake pedal gradually and check that vehicle remains stationary.
4) Depress brake pedal and shift select lever to “N” range.
5) Then, release brake pedal gradually and check that vehicle moves.

WARNING:
Before test, check to make sure no one is around vehicle or down on a slope and keep watchful for safety during test.

Test result	Possible cause
Vehicle moves at “P” range or remains stationary at “N” range	Defective parking lock pawl or spring

ELECTRONIC CONTROL SYSTEM DIAGNOSIS

TCM has on-board diagnostic system (a system self-diagnosis function).
Investigate where the trouble is by referring to “DIAGNOSTIC FLOW TABLE” and ”DIAGNOSTIC TROUBLE CODE TABLE” on later pages.

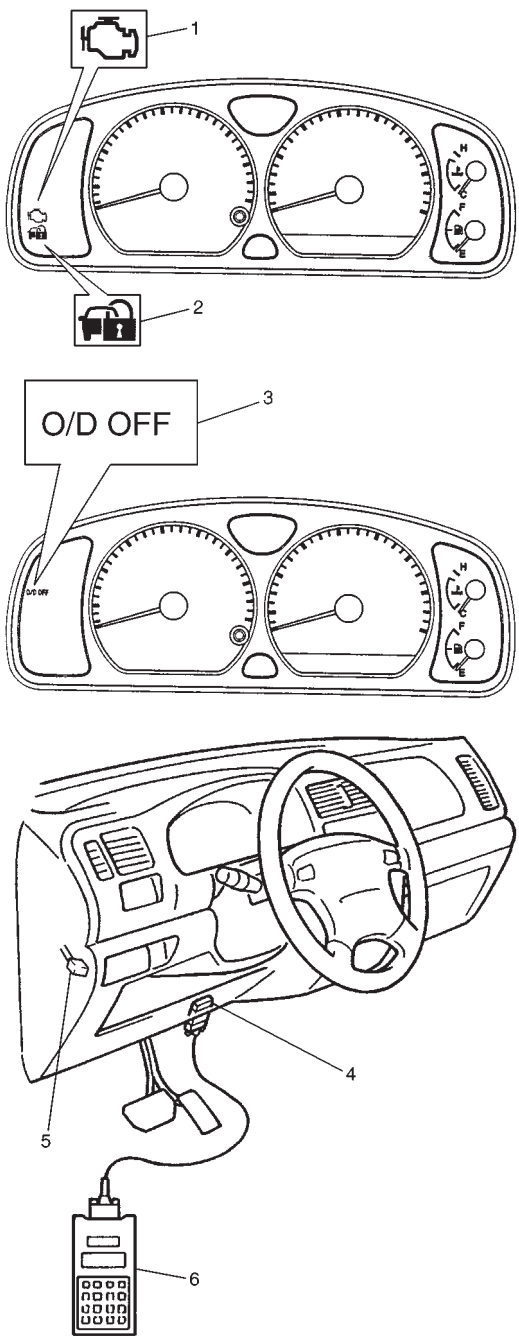

1. Malfunction indicator lamp (MIL)
2. Immobilizer indicator lamp (if equipped)
3. “O/D OFF” lamp
4. Data link connector (DLC)
5. Monitor connector No.2
6. Suzuki scan tool

PRECAUTIONS IN DIAGNOSING TROUBLES

[PRECAUTIONS IN IDENTIFYING DIAGNOSTIC TROUBLE CODE]

- For vehicle equipped with immobilizer indicator lamp (which comes on when turning on ignition switch leaving engine OFF), malfunction indicator lamp (MIL) comes on when TCM detests malfunction of automatic transmission system.
  But MIL does not come on in case of DTC P1887.
- For vehicle equipped without immobilizer indicator lamp, malfunction indicator lamp (MIL) does not come on although TCM detests malfunction of automatic transmission system.
- Don’t disconnect couplers from TCM, battery cable from battery, TCM ground wire harness from engine or main fuse before checking DTC stored in TCM memory.
  Such disconnection will clear memorized information in TCM memory.
- Using SUZUKI scan tool (Tech-1), diagnostic trouble code (DTC) stored in TCM memory can be checked and cleared as well.
  Before its use, be sure to read Operator’s (instruction) Manual supplied with it carefully to have good understanding of its functions and usage.
- Not using scan tool, the DTC stored in TCM memory also can be checked and cleared.
  DTC stored in the TCM memory is outputted by flashing of “O/D OFF” lamp with diagnosis switch terminal of monitor connector No.2 grounded.
  If no DTC is stored in TCM memory, DTC No.12 is outputted repeatedly.
  If no DTC is stored in TCM memory, they are outputted starting from smallest code number in increasing order.
  After all DTCs are outputted, all DTCs are outputted repeatedly.
- When replacing TCM with used one, learning control memory in TCM should be initialized after the replacement referring to “LEARNING CONTROL MEMORY INITIALIZATION” in this section.
- Be sure to read “PRECAUTIONS FOR ELECTRICAL CIRCUIT SERVICE” in SECTION 0A before inspection and observe what is written there.

[INTERMITTENT TROUBLES] and [NOTES ON SYSTEM CIRCUIT INSPECTION]
Refer to SECTION 0A.

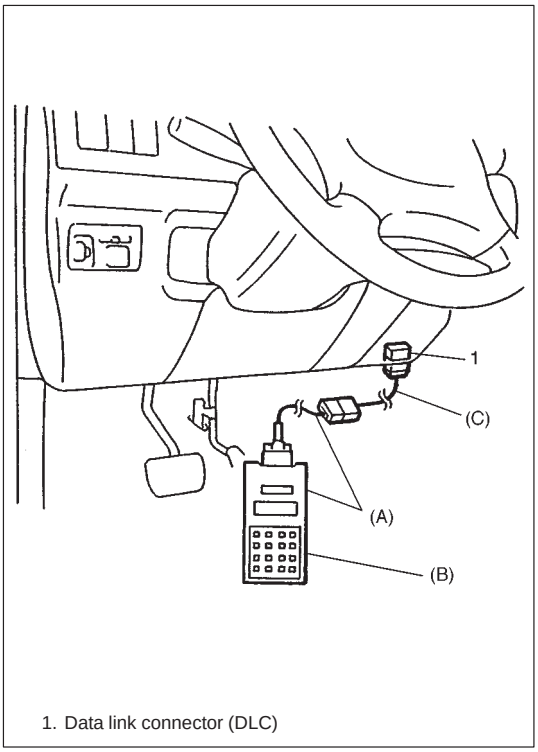

1. Data link connector (DLC)

DIAGNOSTIC TROUBLE CODE(S) CHECK

[Check DTC with SUZUKI scan tool]

1) Turn ignition switch OFF.
2) After setting cartridge to connect SUZUKI scan tool to data link connector (DLC) located on underside of instrument panel at driver's seat side.

   Special Tool
   (A): 09931-76011 (SUZUKI scan tool)
   (B): Mass storage cartridge
   (C): 09931-76030 (16/14 pin DLC cable)

3) Turn ignition switch ON.
4) Read DTC according to instructions displayed on SUZUKI scan tool and print it or write it down. Refer to SUZUKI scan tool operator's manual for further details.
5) After completing the check, turn ignition switch OFF and disconnect SUZUKI scan tool from data link connector (DLC).

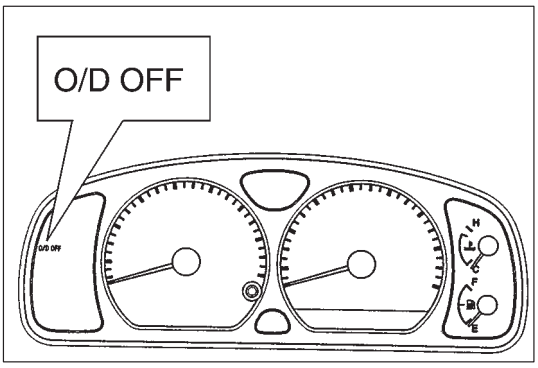

[Check DTC without SUZUKI scan tool]

1) Turn ignition switch ON and make sure that O/D OFF lamp is OFF in combination meter (O/D cut switch OFF).

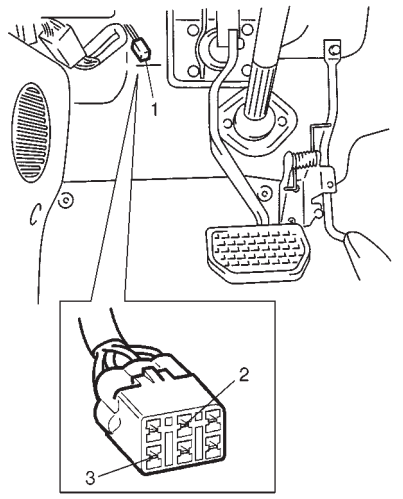

1. Monitor connector No.2
2. Diagnosis switch terminal
3. Ground terminal

2) Turn ignition switch OFF.
3) Using service wire, ground diagnosis switch terminal of monitor connector No.2.

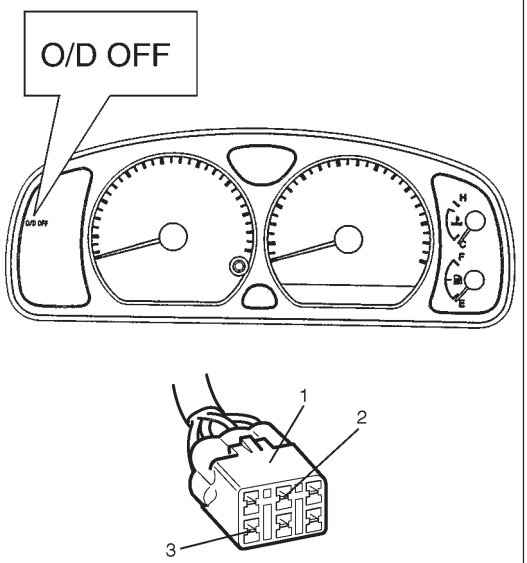

1. Monitor connector No.2
2. Diagnosis switch terminal
3. Ground terminal

4) Read DTC from flashing pattern of O/D OFF lamp.
5) After completing the DTC check, turn ignition switch OFF and disconnect service wire from monitor connector No.2.

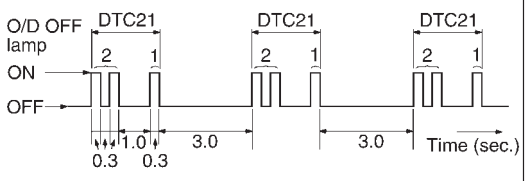

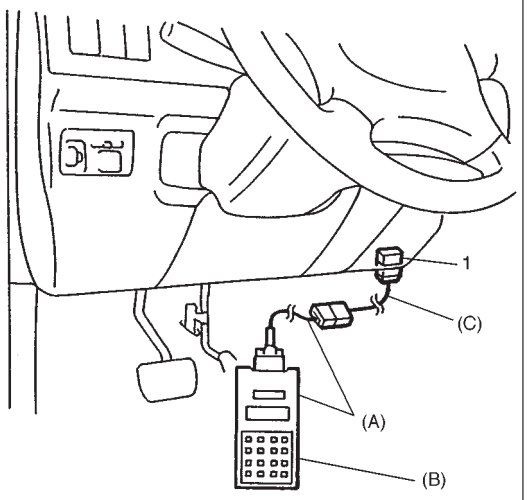

1. Data link connector (DLC)

HOW TO CLEAR DIAGNOSTIC TROUBLE CODE(S) (DTC)

[Clear DTC with SUZUKI scan tool]

1) Turn ignition switch OFF.
2) After setting cartridge to SUZUKI scan tool connect it to data link connector (DLC) located on underside of instrument panel at driver's seat side.

   Special Tool
   (A): 09931-76011 (SUZUKI scan tool)
   (B): Mass storage cartridge
   (C): 09931-76030 (16/14 pin DLC cable)

3) Turn ignition switch ON.
4) Erase DTC according to instructions displayed on SUZUKI scan tool. Refer to SUZUKI scan tool operator's manual for further details.
5) After completing the check, turn ignition switch OFF and disconnect SUZUKI scan tool from data link connector (DLC).

[Clear DTC without SUZUKI scan tool]

1) Turn ignition switch ON.
2) Using service wire ground diagnosis switch terminal of monitor connector No.2 five times within 10 seconds.
3) Perform "DTC check" and confirm that only DTC 12 (normal DTC) is displayed. If not repeat step 1) and 2) and check again.

DIAGNOSTIC TROUBLE CODE (DTC) TABLE

EXAMPLE: SHIFT SOLENOID-A ELECTRICAL (CODE No. 21)

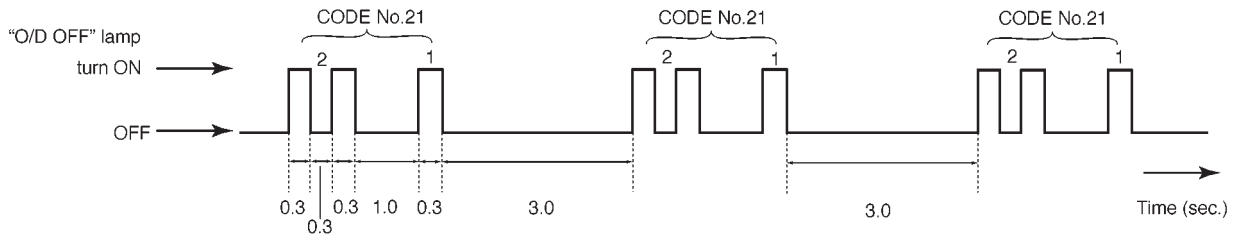

DTC NO.		"O/D OFF" Light Flashing Pattern of DTC (Not using scan tool)	DETECTING ITEMS	MIL	
Using scan tool	Not using scan tool			Vehicle equipped with immobilizer indicator lamp	Vehicle equipped without immobilizer indicator lamp
—	12		Normal	—	—
P0715	14		Input/Turbine speed sensor circuit malfunction	1 driving cycle	Not applicable
P0730	18		Incorrect gear ratio	2 driving cycles	Not applicable
P0753	21		Shift solenoid-A electrical	1 driving cycle	Not applicable
	22				
P0758	23		Shift solenoid-B electrical	1 driving cycle	Not applicable
	24				
P0763	43		Shift solenoid-C electrical	1 driving cycle	Not applicable
	44				
P0768	45		Shift solenoid-D electrical	1 driving cycle	Not applicable
	46				
P0743	25		Torque converter clutch (lock-up clutch) system electrical	1 driving cycle	Not applicable
	26				
P0741	29		Torque converter clutch (lock-up clutch) solenoid performance or stuck off	2 driving cycles	Not applicable
P0720	31		Output shaft speed sensor circuit malfunction	1 driving cycle	Not applicable

DTC NO.		"O/D OFF" Light Flashing Pattern of DTC (Not using scan tool)	DETECTING ITEMS	MIL	
Using scan tool	Not using scan tool			Vehicle equipped with immobilizer indicator lamp	Vehicle equipped without immobilizer indicator lamp
P1700	32		Throttle position signal input malfunction	1 driving cycle	Not applicable
	33				
P0705	34		Transmission range sensor circuit malfunction	1 driving cycle	Not applicable
P0725	35		Engine speed input circuit malfunction	2 driving cycles	Not applicable
P0710	36		Transmission temperature sensor circuit malfunction	2 driving cycles	Not applicable
	38				
P1709	51		Engine coolant temperature signal circuit	1 driving cycle	Not applicable
P0702	52		Transmission control system electrical	1 driving cycle	Not applicable
P1702			Internal malfunction of TCM		
P1887	57		VSS signal circuit	Not applicable	Not applicable

TCM POWER AND GROUND CIRCUIT CHECK
(AUTOMATIC TRANSMISSION DOESN'T SHIFT TO 1ST GEAR AT VEHICLE START IN "D" RANGE)

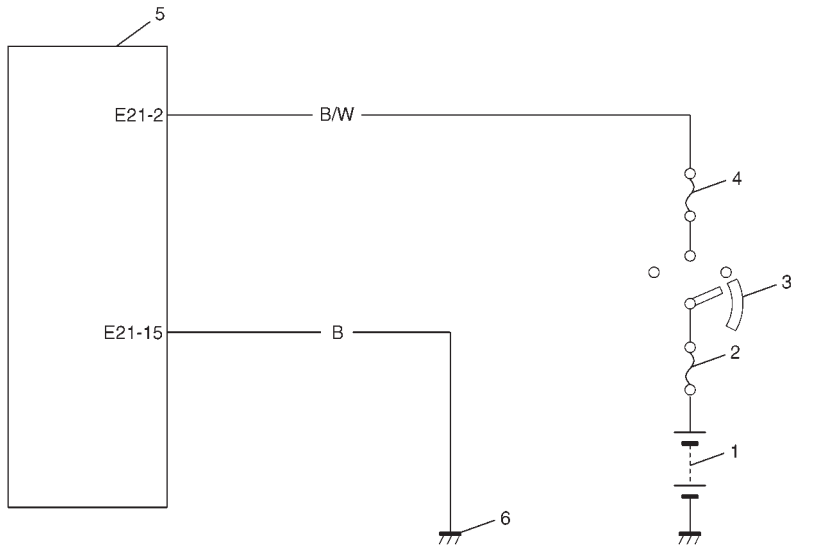

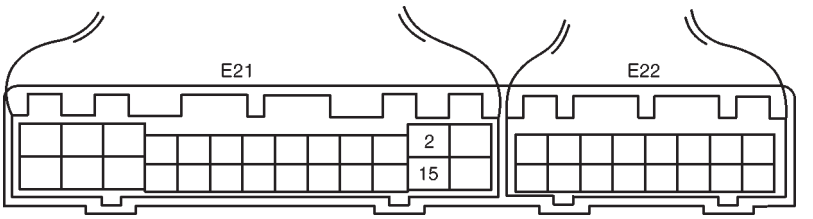

Terminal arrangement of TCM coupler
(Viewed from harness side)

1. Battery
2. Main fuse
3. Ignition switch
4. Circuit fuse (IG)
5. TCM
6. Ground

STEP	ACTION	YES	NO
1	Check voltage between terminal E21-2 of TCM coupler and body ground with ignition switch ON. Is it 10 – 14V?	Go to Step 2.	"B/W" wire open.
2	Check voltage between terminal E21-15 of TCM coupler and body ground with ignition switch ON. Is it about 0V?	Poor E21-2 or E21-15 connection. If all above are OK, replace known-good TCM and recheck.	"B" wire open.

DTC P0715 (DTC NO.14) INPUT/TURBINE SPEED SENSOR CIRCUIT MALFUNCTION

(INPUT/TURBINE SPEED SENSOR SIGNAL VOLTAGE TOO HIGH OR TOO LOW)

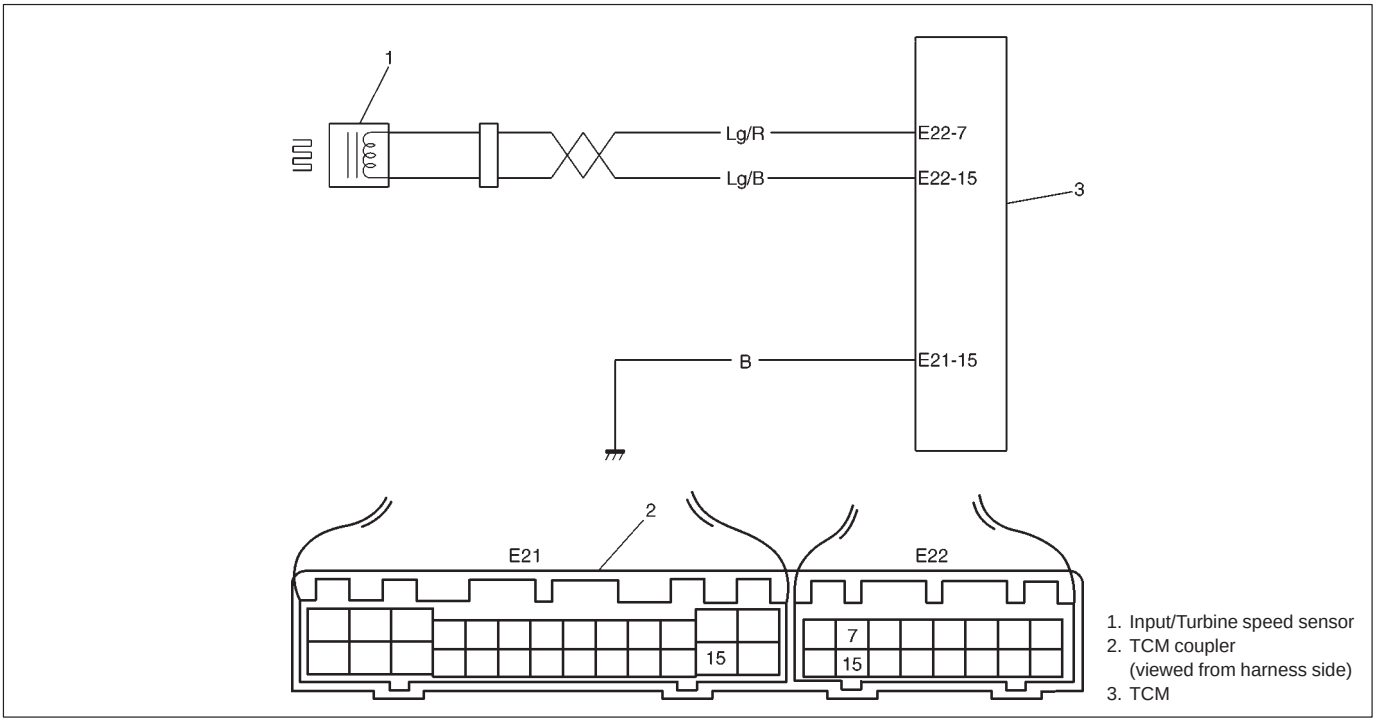

STEP	ACTION	YES	NO
1	Was “AUTOMATIC TRANSMISSION DIAGNOSTIC FLOW CHART” performed?	Go to Step 2.	Go to “AUTOMATIC TRANSMISSION DIAGNOSTIC FLOW CHART”.
2	1) Turn ignition switch OFF and disconnect A/T output shaft speed sensor – input/turbine speed sensor coupler. 2) Measure resistance between terminals of the disconnected sensor side coupler. Is it 160-200 Ω? (Figure 1)	Go to Step 3.	Replace input/turbine speed sensor.
3	1) Connect A/T output shaft speed sensor – input/turbine speed sensor coupler then disconnect TCM couplers. 2) Measure resistance between terminal E22-7 and E22-15 of disconnected harness side coupler. Is it 160-200 Ω?	Go to Step 4.	“Lg/R” or “Lg/B” wire open or shorted each other.
4	1) Turn ignition switch OFF and connect input/turbine speed sensor coupler then disconnect TCM couplers. 2) Measure resistance between terminal E22-7 (of disconnected harness side coupler) and body ground then terminal E22-15 (of disconnected harness side coupler) and body ground. Are they about 0 Ω? (Figure 2)	Short in between “Lg/R” wire and ground or “Lg/B” wire and ground.	Poor connection of terminal E22-7 or E22-15 of TCM. If all the above are in good condition, substitute a known-good TCM and recheck.

Figure 1

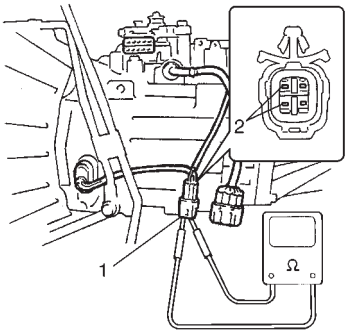

1. A/T output shaft speed snsor – Input/Turbine speed sensor coupler
2. Input/Turbine speed sensor terminal

Figure 2

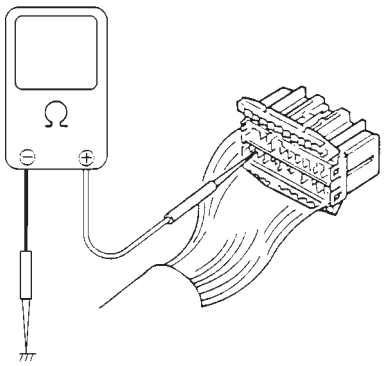

DTC P0730 (DTC NO. 18) INCORRECT GEAR RATIO
(DIFFERENCE IN DETECTED REVOLUTION BETWEEN INPUT/ TURBINE SPEED SENSOR AND OUTPUT SHAFT SPEED SENSOR TOO WIDE)

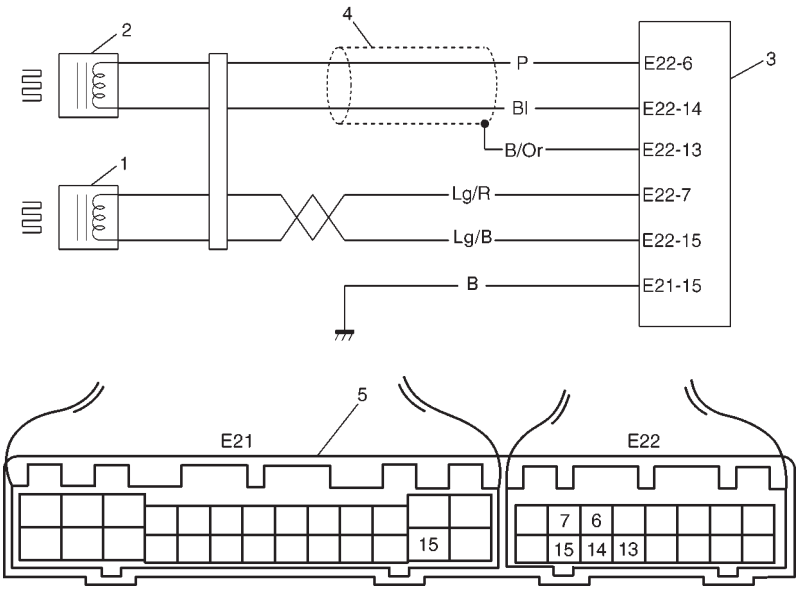

1. Input/Turbine speed sensor
2. A/T output shaft speed sensor
3. TCM
4. Shield wire
5. TCM coupler
   (viewed from harness side)

STEP	ACTION	YES	NO
1	Check if DTC P0730 (DTC No.18) displayed with DTC P0715 (DTC No.14) or DTC P0720 (DTC No.31). Is DTC P0730 (DTC No.18) displayed with DTC P0715 (DTC No.14) or DTC P0720 (DTC No.31)? (Figure 1)	Inspect according to DTC P0715 (DTC No.14) or DTC P0720 (DTC No.31) flow table first.	Go to Step 2.
2	1) Turn ignition switch OFF and disconnect TCM couplers. 2) Measure resistance between terminal E22-13 of the disconnected harness side coupler and body ground. Is it about 0 Ω? (Figure 2)	Short in between shield portion or “B/Or” wire and ground.	Go to Step 3.
3	Check input/turbine speed sensor and A/T output shaft speed sensor referring to each item in this section. Are they OK? (Figure 3)	● Broken wire in shield portion or broken “B/Or” wire, or shorted to power source circuit. ● Malfunction of A/T itself (clutch slipping, etc.) If all the above are in good condition, substitute a known-good TCM and recheck.	Inspect and replace referring to each item in this section.

Figure 1

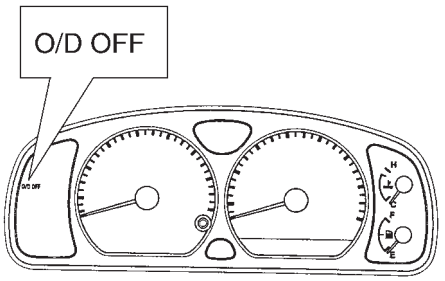

Figure 2

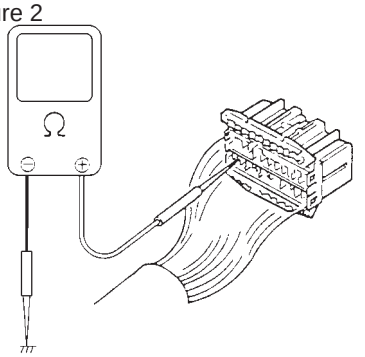

Figure 3

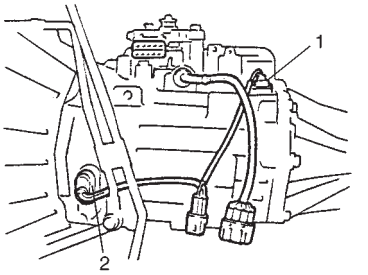

1. A/T output shaft speed sensor
2. Input/Turbine speed sensor

DTC P0753 (DTC NO.21/22) SHIFT SOLENOID-A (NO.1) ELECTRICAL
DTC P0758 (DTC NO.23/24) SHIFT SOLENOID-B (NO.2) ELECTRICAL
DTC P0763 (DTC NO.43/44) SHIFT SOLENOID-C (NO.3) ELECTRICAL
DTC P0768 (DTC NO.45/46) SHIFT SOLENOID-D (NO.4) ELECTRICAL
DTC P0743 (DTC NO.25/26) TCC (LOCK-UP CLUTCH) SYSTEM ELECTRICAL

(• SOLENOID OUTPUT VOLTAGE TOO HIGH ALTHOUGH TCM ORDERS SOLENOID TO TURN OFF
• SOLENOID OUTPUT VOLTAGE TOO LOW ALTHOUGH TCM ORDERS SOLENOID TO TURN ON)

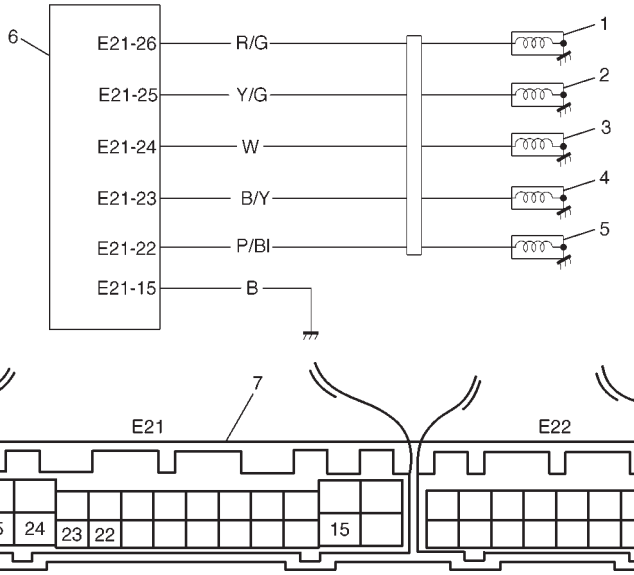

1. Shift solenoid-A (No.1)
2. Shift solenoid-B (No.2)
3. Shift solenoid-C (No.3)
4. Shift solenoid-D (No.4)
5. TCC (lock-up) solenoid
6. TCM
7. TCM coupler (viewed from harness side)

STEP	ACTION	YES	NO
1	1) Turn ignition switch OFF and disconnect solenoid coupler. 2) Measure the resistance between each solenoid terminal of the solenoid side coupler and transmission ground. Is it 11 – 15 Ω? (Figure 1)	Go to Step 2.	• Solenoid lead wire open or shorted to ground. • Malfunction of solenoid.
2	Is DTC No.22, 24, 44, 46 or 26?	Go to Step 4.	Go to Step 3.
3	Is DTC No.21, 23, 43, 45 or 25?	Go to Step 6.	Go to Step 5. (When DTC is P0753, P0758, P0763, P0768 or P0743.)
4	1) Disconnect TCM couplers. 2) Measure the resistance between terminal E21-26, E21-25, E21-24, E21-23 or E21-22 of the disconnected harness side TCM coupler and body ground. Is it about 0 Ω? (Figure 2)	"R/G", "Y/G", "W", "B/Y" or "P/BI" wire shorted to ground.	Substitute a known-good TCM and re-check.

STEP	ACTION	YES	NO
5	1) Disconnect TCM couplers. 2) Measure the resistance between terminal E21-26, E21-25, E21-24, E21-23 or E21-22 of the disconnected harness side TCM coupler and body ground. Is it about 0 Ω? (Figure 1)	"R/G", "Y/G", "W", "B/Y" or "P/Bl" wire shorted to ground.	Go to Step 6.
6	1) Connect solenoid coupler then disconnect TCM couplers. 2) Measure the resistance between each solenoid terminal of the disconnected harness side TCM coupler and body ground. Is it 11 – 15 Ω?	Go to Step 7.	"R/G", "Y/G", "W", "B/Y" or "P/Bl" wire open or poor connection of shift solenoid coupler.
7	Turn ignition switch ON then measure voltage between terminal E21-26, E21-25, E21-24, E21-23 or E21-22 of the disconnected harness side TCM coupler and body ground. Is it about 0 V?	Poor connection at terminal E21-26, E21-25, E21-24, W21-23 or E21-22 of TCM. If all the above are in good condition, substitute a known-good TCM and recheck.	"R/G", "Y/G", "W", "B/Y" or "P/Bl" wire or shift solenoid lead wire shorted to power source circuit.

Solenoid	Terminal Number	Lead Wire Color	Terminal Number of Shift Solenoid Coupler (shift solenoid side)
Shift solenoid-A (No.1)	E21-26	R/G	3
Shift solenoid-B (No.2)	E21-25	Y/G	4
Shift solenoid-C (No.3)	E21-24	W	5
Shift solenoid-D (No.4)	E21-23	B/Y	6
TCC (lock-up) solenoid	E21-22	P/Bl	1

Figure 1

1. TCC (lock-up) solenoid terminal
2. A/T fluid temp. sensor terminal
3. Shift solenoid-A (No.1) terminal
4. Shift solenoid-B (No.2) terminal
5. Shift solenoid-C (No.3) terminal
6. Shift solenoid-D (No.4) terminal

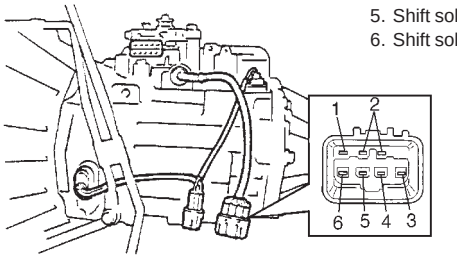

Figure 2

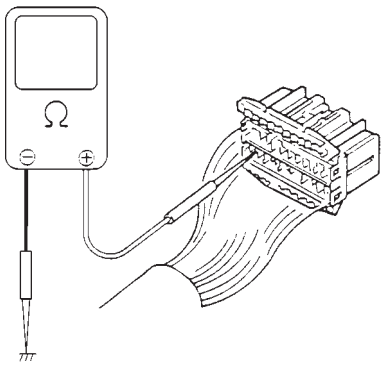

DTC P0741 (DTC NO.29) TCC (LOCK-UP) SOLENOID PERFORMANCE OR STUCK OFF

(• DIFFERENCE BETWEEN TURBINE REV. AND ENGINE REV. TOO CLOSE EVEN THOUGH TCM ORDERED TO TURN OFF LOCK-UP
• DIFFERENCE BETWEEN TURBINE REV. AND ENGINE REV. TOO WIDE EVEN THOUGH TCM ORDERED TO TURN ON LOCK-UP)

STEP	ACTION	YES	NO
1	Was “AUTOMATIC TRANSMISSION DIAGNOSTIC FLOW CHART” performed?	Go to Step 2.	Go to “AUTOMATIC TRANSMISSION DIAGNOSTIC FLOW CHART”.
2	Check TCC (lock-up) solenoid referring to “SHIFT SOLENOID VALVE AND TCC (LOCK-UP) SOLENOID VALVE INSPECTION” in this section. Is it in good condition?	Go to Step 3.	Replace TCC (lock-up) solenoid.
3	Check valve body for fluid passage clog, or lock-up control valve, secondary regulator valve or signal valve stuck, referring to “TRANSMISSION UNIT REPAIR OVERHAUL” in this section. Are they in good condition?	Go to Step 4.	Faulty valve body.
4	Substitute a known-good torque converter and recheck. Is it OK?	Torque converter malfunction.	Overhaul and repair automatic transmission.

DTC P0720 (DTC NO. 31) OUTPUT SHAFT SPEED SENSOR CIRCUIT MALFUNCTION

(OUTPUT SHAFT SPEED SENSOR SIGNAL VOLTAGE TOO HIGH OR TOO LOW)

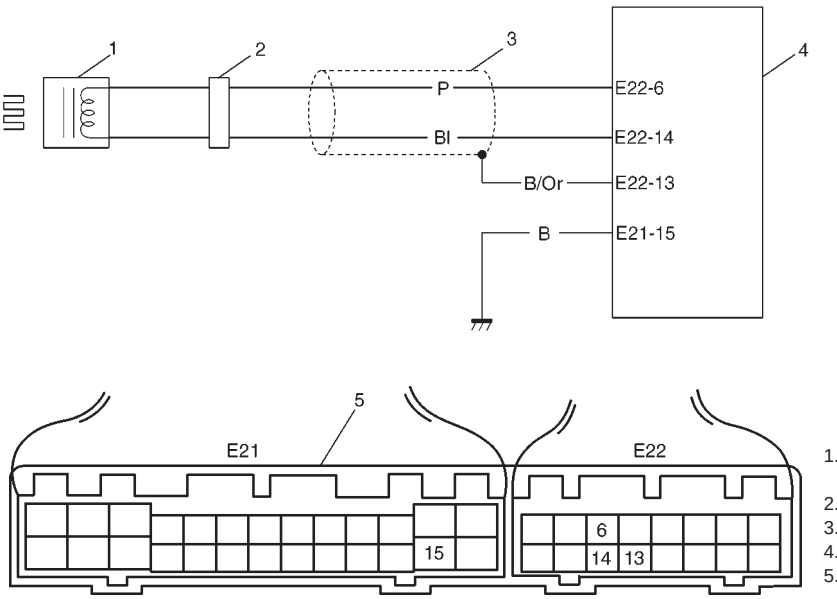

1. Output shaft speed sensor (A/T VSS)
2. Coupler
3. Shield wire
4. TCM
5. TCM coupler (viewed from harness side)

STEP	ACTION	YES	NO
1	1) Turn ignition switch OFF and disconnect A/T output shaft speed sensor – input/turbine speed sensor coupler. (Figure1) 2) Measure resistance between terminals of disconnected sensor side coupler. Is it 160 – 200 Ω? (Figure 2)	Go to Step 2.	Replace A/T output shaft speed sensor.
2	1) Connect A/T output shaft speed sensor coupler then disconnect TCM couplers. 2) Measure resistance between terminal E22-6 and E22-14 of disconnected harness side coupler. Is it 160 – 200 Ω? (Figure 4)	Go to Step 3.	“P” or “Bl” wire open or shorted each other.
3	1) Turn ignition switch OFF and disconnect A/T output shaft speed sensor – input/turbine speed sensor coupler. (Figure 1) 2) Measure resistance between terminal “3” (of disconnected sensor side coupler) and body ground then terminal “4” (of disconnected sensor side coupler) and body ground. Is it about 0 Ω? (Figure 3)	Replace A/T output shaft speed sensor.	Go to Step 4.

STEP	ACTION	YES	NO
4	1) Turn ignition switch OFF and connect A/T output shaft speed sensor coupler then disconnect TCM couplers. 2) Measure resistance between terminal E22-6 (of disconnected harness side coupler) and body ground then terminal E22-14 (of disconnected harness side coupler) and body ground. Is it about 0 Ω? (Figure 5)	"P" or "Bl" wire shorted to ground.	Go to Step 5.
5	Measure resistance between terminal E22-6 and E22-13 (of disconnected harness side coupler) then terminal E22-14 and E22-13 (of disconnected harness side coupler). Is it about 0 Ω? (Figure 4)	"P" wire or "Bl" wire shorted to shield portion.	Poor connection of terminal E22-6 or E22-14 of the TCM. If all the above are in good condition, substitute a known-good TCM and recheck.

Figure 1

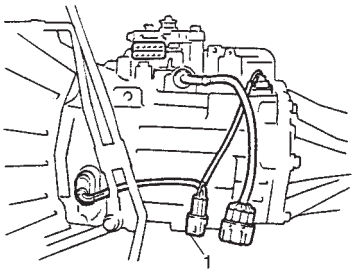

1. A/T output shaft speed sensor – input/turbine speed sensor coupler

Figure 2

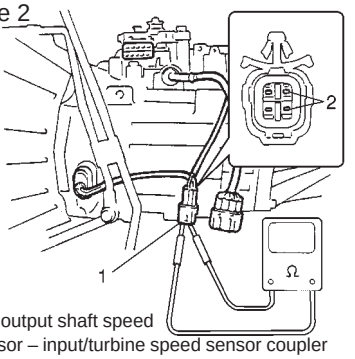

1. A/T output shaft speed sensor – input/turbine speed sensor coupler
2. A/T output shaft speed sensor terminals

Figure 3

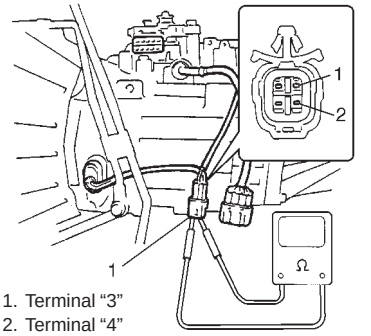

1. Terminal "3"
2. Terminal "4"

Figure 4

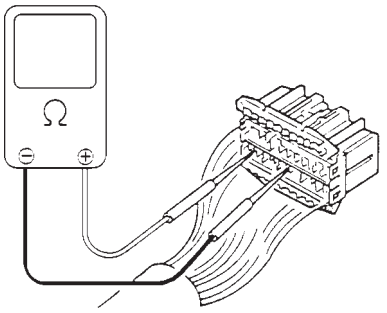

Figure 5

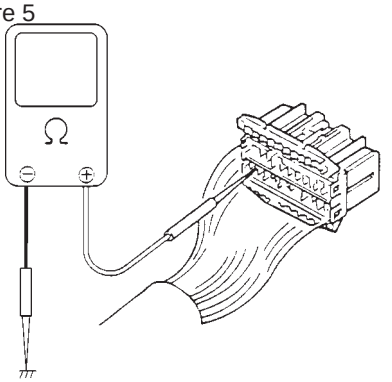

DTC P1700 (DTC NO.32/33) THROTTLE POSITION SIGNAL INPUT MALFUNCTION

(NO OR ABNORMAL THROTTLE OPENING SIGNAL INPUTTED)

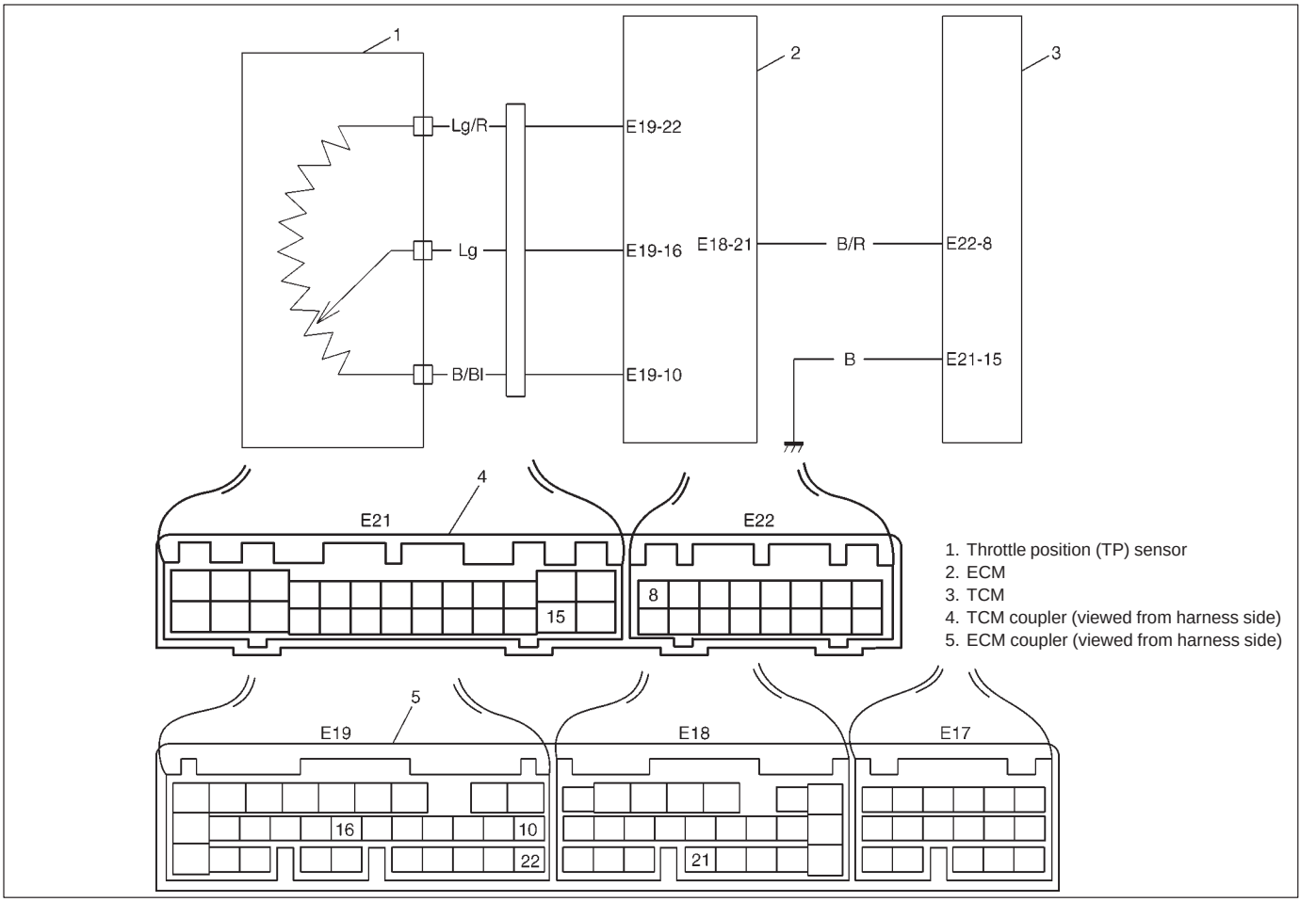

STEP	ACTION	YES	NO
1	Check DTC of “ENGINE DIAGNOSIS” referring to SECTION 6. Is there DTC related to throttle position sensor detected?	Inspect and repair referring to DTC flow table of “ENGINE DIAGNOSIS” in SECTION 6.	Go to Step 2.
2	Is DTC No.33?	Go to Step 4.	Go to Step 3.
3	Is DTC No.32?	Go to Step 5.	Go to Step 6. (When DTC is P1700.)
4	1) Turn ignition switch OFF and disconnect ECM couplers. 2) Turn ignition switch ON and check voltage between terminal E18-21 of disconnected harness side ECM coupler and body ground. Is it 10 – 14 V?	Poor connection of terminal E18-21 of ECM coupler. If connection is OK, substitute a known-good ECM and recheck.	“B/R” wire open or poor connection of terminal E22-8 of TCM coupler. If wire and connection are OK, substitute a known-good TCM and recheck.
5	1) Turn ignition switch OFF and disconnect ECM couplers. 2) Turn ignition switch ON and check voltage between terminal E18-21 of disconnected harness side ECM coupler and body ground. Is it 10 – 14 V?	Go to Step 7.	Substitute a known-good TCM and recheck.

STEP	ACTION	YES	NO
6	1) Check for proper connection of terminal E18-21 of ECM coupler. 2) If OK, turn ignition switch OFF and disconnect ECM couplers. 3) Turn ignition switch ON and check voltage between terminal E18-21 of disconnected harness side ECM coupler and body ground. Is it 10 – 14 V?	Go to Step 7.	"B/R" wire open or poor connection of terminal E22-8 of TCM coupler. If wire and connection are OK, substitute a known-good TCM and recheck.
7	1) Turn ignition switch OFF and disconnect TCM couplers. 2) Check resistance between terminal E22-8 of disconnected harness side TCM coupler and body ground. Is it infinity?	Intermittent trouble or faulty ECM. Check for intermittent referring to "INTERMITTENT AND POOR CONNECTION" in SECTION 0A. If no trouble found, substitute a known-good ECM and recheck.	"B/R" wire shorted to ground.

DTC P0705 (DTC NO.34) TRANSMISSION RANGE SENSOR (SWITCH) CIRCUIT MALFUNCTION

(NO SHIFT SWITCH SIGNAL INPUTTED OR TWO OR MORE SHIFT SWITCH SIGNALS INPUTTED AT THE SAME TIME)

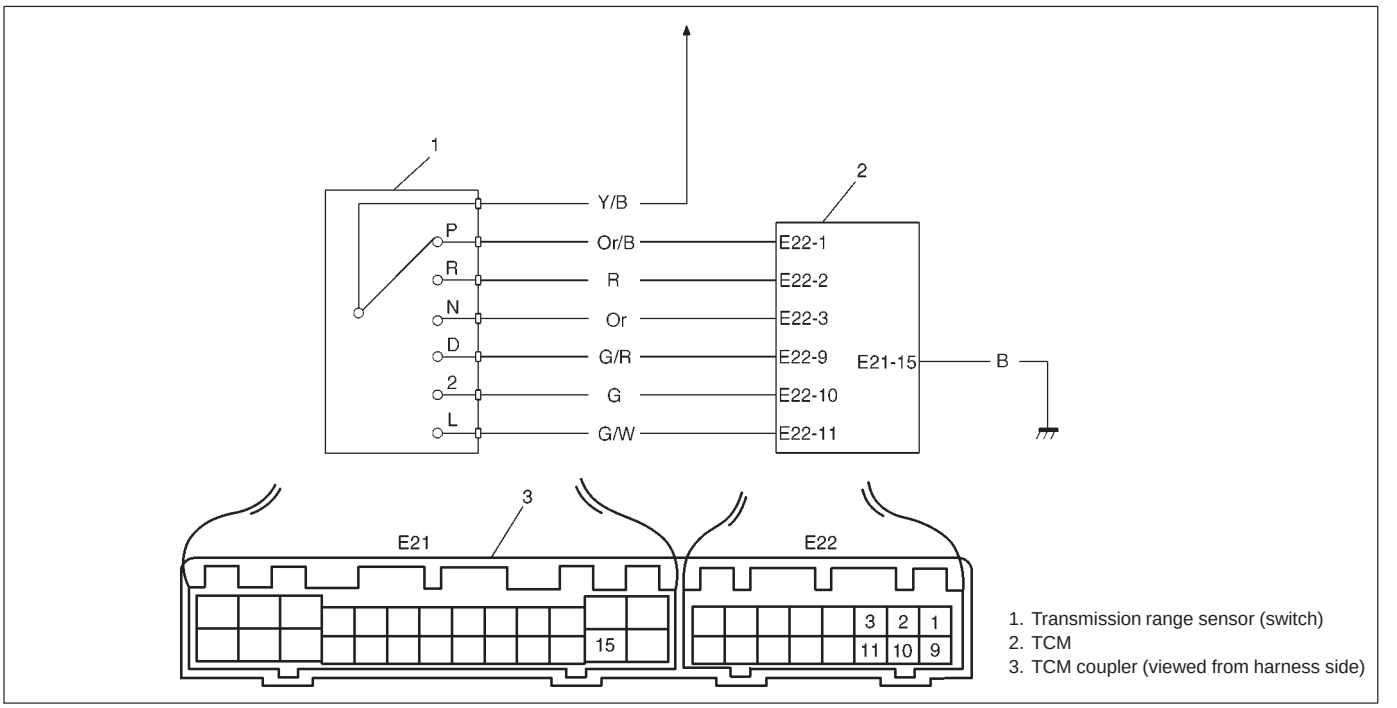

STEP	ACTION	YES	NO
1	1) Turn ignition switch OFF, disconnect TCM coupler. 2) Turn ignition switch ON, check voltage between terminal E22-1 and E21-15 of disconnected harness side TCM coupler. Is it 10 – 14 V at “P” range and 0 V at the other range?	Go to Step 2.	Go to Step 7.
2	While ignition switch ON, check voltage between terminal E22-2 and E21-15 of disconnected harness side TCM coupler. Is it 10 – 14 V at “R” range and 0 V at the other range?	Go to Step 3.	Go to Step 7.
3	While ignition switch ON, check voltage between terminal E22-3 and E21-15 of disconnected harness side TCM coupler. Is it 10 – 14 V at “N” range and 0 V at the other range?	Go to Step 4.	Go to Step 7.
4	While ignition switch ON, check voltage between terminal E22-9 and E21-15 of disconnected harness side TCM coupler. Is it 10 – 14 V at “D” range and 0V at the other range?	Go to Step 5.	Go to Step 7.
5	While ignition switch ON, check voltage between terminal E22-10 and E21-15 of disconnected harness side TCM coupler. Is it 10 – 14 V at “2” range and 0 V at the other range?	Go to Step 6.	Go to Step 7.

STEP	ACTION	YES	NO
6	While ignition switch ON, check voltage between terminal E22-11 and E21-15 of disconnected harness side TCM coupler. Is it 10 – 14 V at “L” range and 0 V at the other range?	Intermittent trouble or faulty TCM. Check for intermittent trouble referring to “INTERMITTENT AND POOR CONNECTION” in SECTION 0B.	Go to Step 7.
7	Check transmission range sensor referring in this section. Is it OK? (Figure 1)	Shift switch wire shorted. If wire harnesses are OK, substitute a known-good TCM and recheck.	Replace transmission range sensor.

Figure 1

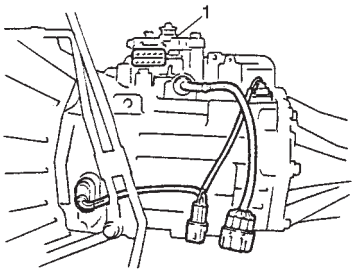

1. Transmission range sensor

DTC P0725 (DTC NO.35) ENGINE SPEED INPUT CIRCUIT MALFUNCTION
(INPUTTED ENGINE REV. SIGNAL TOO LOW OR TOO HIGH)

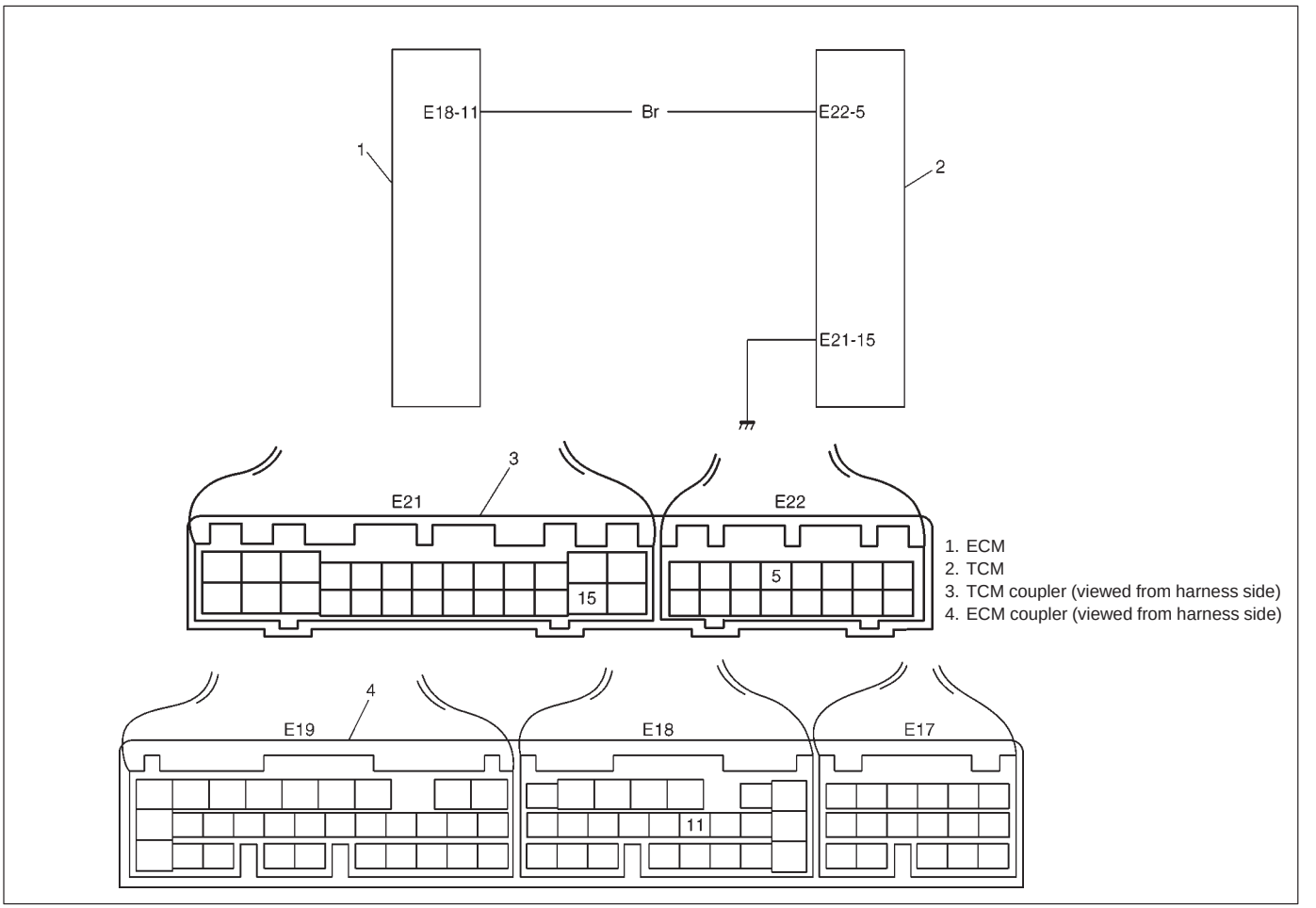

STEP	ACTION	YES	NO
1	Check DTC of “ENGINE DIAGNOSIS” referring to SECTION 6. Is there DTC related to engine speed sensor?	Inspect and repair referring to DTC flow table of “ENGINE DIAGNOSIS” in SECTION 6.	Go to Step 2.
2	1) Turn ignition switch OFF and disconnect ECM or TCM couplers. 2) Measure resistance between terminal E18-11 and E22-5 of disconnected harness side coupler. Is it about 0 Ω?	Go to Step 3.	“Br” wire open.
3	Measure resistance between terminal E22-5 of disconnected harness side coupler and body ground. Is it infinity?	Go to Step 4.	“Br” wire shorted to ground.

STEP	ACTION	YES	NO
4	1) Turn ignition switch OFF and connect ECM couplers. 2) Turn ignition switch ON and measure voltage between terminal E22-5 of disconnected harness side TCM coupler and body ground. Is it 10 – 14 V?	Intermittent trouble or faulty ECM or TCM. Check for intermittent referring to “INTERMITTENT AND POOR CONNECTION” in SECTION 0A. If no trouble found, substitute a known-good ECM or TCM and recheck.	“Br” wire is shorted to power circuit or faulty ECM. If “Br” wire is OK, substitute a known-good ECM and recheck.

Figure 1

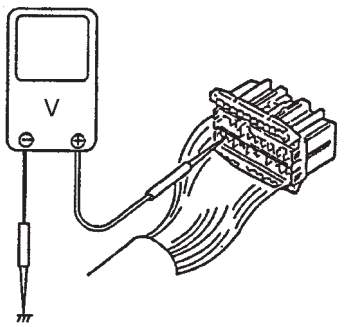

DTC P0710 (DTC No.36/38) TRANSMISSION TEMPERATURE SENSOR CIRCUIT MALFUNCTION

(• A/T FLUID TEMPERATURE SIGNAL INPUT VOLTAGE TOO LOW
• A/T FLUID TEMPERATURE SIGNAL INPUT VOLTAGE DOES NOT GO DOWN ALTHOUGH STANDARD VALUE OF ENGINE REV. SIGNAL INPUT)

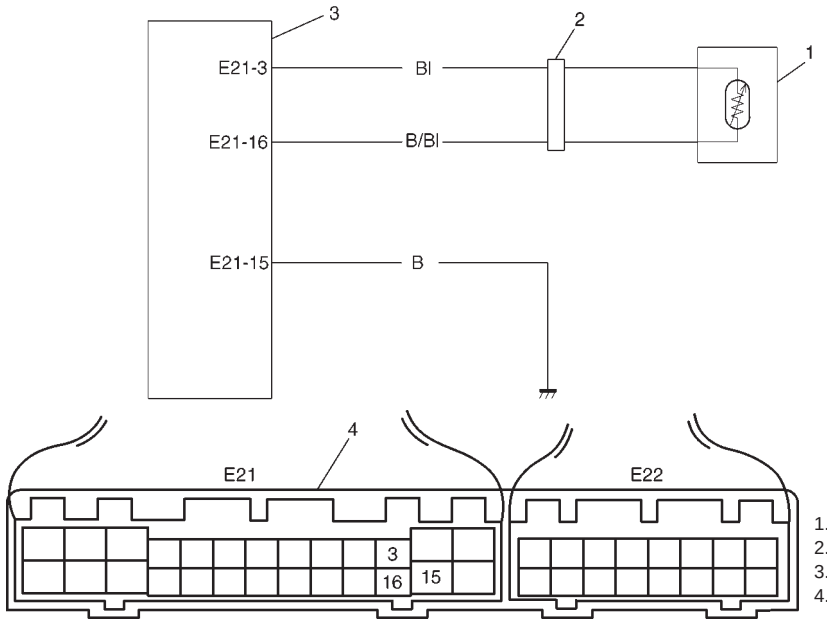

1. A/T fluid temperature sensor
2. Coupler
3. TCM
4. TCM coupler (viewed from harness side)

STEP	ACTION	YES	NO
1	1) Turn ignition switch OFF and disconnect sensor wire harness coupler. 2) Measure resistance between “Bl” wire and “B/Bl” wire terminal of sensor harness side coupler. Is it infinity or 0 Ω?	Faulty transmission temperature sensor. Replace transmission temperature sensor.	Go to Step 2.
2	Is DTC No.36?	Go to Step 4.	Go to Step 3.
3	Is DTC No.38?	Go to Step 5.	Go to Step 6. (When DTC is P0710.)
4	1) Turn ignition switch OFF and connect sensor wire harness coupler. 2) Disconnect TCM couplers. 3) Measure the resistance between terminal E21-3 and E21-16 of disconnected harness side coupler. Is it about 0 Ω?	“Bl” and “B/Bl” wire shorted each other.	Substitute a known-good TCM and recheck.
5	1) Turn ignition switch OFF and connect sensor wire harness coupler. 2) Disconnect TCM couplers. 3) Measure the resistance between terminal E21-3 and E21-16 of disconnected harness side coupler. Is it infinity?	“Bl” or “B/Bl” wire open or poor connection of solenoid wire harness coupler.	Go to Step 7.

STEP	ACTION	YES	NO
6	1) Turn ignition switch OFF and connect sensor wire harness coupler. 2) Disconnect TCM couplers. 3) Measure the resistance between terminal E21-3 and E21-16 of disconnected harness side coupler. Is it about 0 Ω or infinity?	"Bl" or "B/Bl" wire open, shorted each other or poor connection of solenoid wire harness coupler.	Go to Step 7.
7	1) Turn ignition switch OFF and connect TCM couplers. 2) Disconnect solenoid wire harness coupler. 3) Turn ignition switch ON then measure voltage between "Bl" wire terminal of disconnected harness side coupler and engine ground. (Figure 1) Is it 4 – 6 V?	Intermittent trouble or faulty TCM. Check for intermittent referring to "INTERMITTENT AND POOR CONNECTION" in SECTION 0A. If no trouble found, substitute a known-good TCM and recheck.	"Bl" wire shorted to power circuit or poor connection of terminal E21-3. If wire and connection are OK, substitute a known-good TCM.

Figure 1

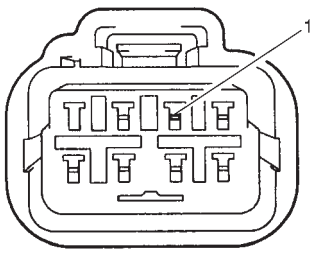

1. "Bl" wire terminal

DTC P1709 (DTC NO.51) ENGINE COOLANT TEMPERATURE SIGNAL CIRCUIT

(O/D CUT SIGNAL FROM ECM REQUIRE O/D CUT ALTHOUGH A/T FLUID TEMPERATURE IS NORMAL OPERATING TEMPERATURE AND ENGINE REV. IS STANDARD)

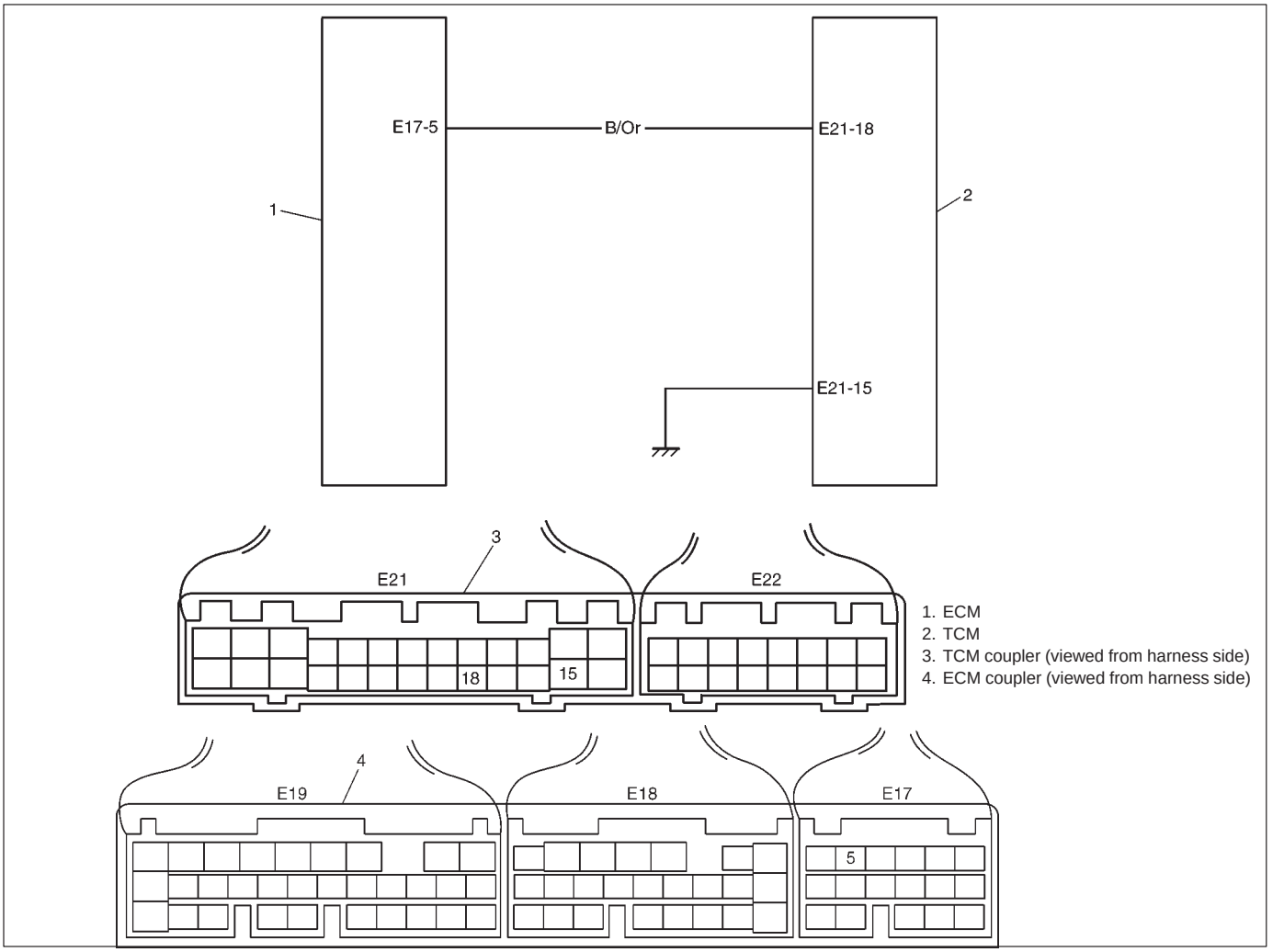

STEP	ACTION	YES	NO
1	Check DTC of “ENGINE DIAGNOSIS” referring to SECTION 6. Is any DTC detected?	Inspect and repair referring to DTC flow table of “ENGINE DIAGNOSIS” in SECTION 6.	Go to Step 2.
2	1) Turn ignition switch OFF and disconnect TCM and ECM couplers. 2) Measure resistance between terminal E21-18 of disconnected harness side TCM coupler and body ground. Is it infinity?	Go to Step 3.	“B/Or” wire shorted to ground.
3	1) Turn ignition switch OFF and connect TCM couplers. 2) Turn ignition switch ON and check voltage between terminal E21-18 and body ground. Is it 0V?	Substitute a known-good TCM and recheck.	Substitute a know-good ECM and re-check.

DTC P0702/P1702 (DTC No.52) TRANSMISSION CONTROL SYSTEM ELECTRICAL OR INTERNAL MALFUNCTION OF TCM

(• RELAY OUTPUT VOLTAGE TOO HIGH ALTHOUGH TCM ORDERS THE RELAY TO TURN OFF OR RELAY OUTPUT VOLTAGE TOO LOW ALTHOUGH TCM ORDERS THE RELAY TO TURN ON

• INCORRECT CALCULATIONS OF CHECKING TCM PROGRAMMED DATA INDICATED)

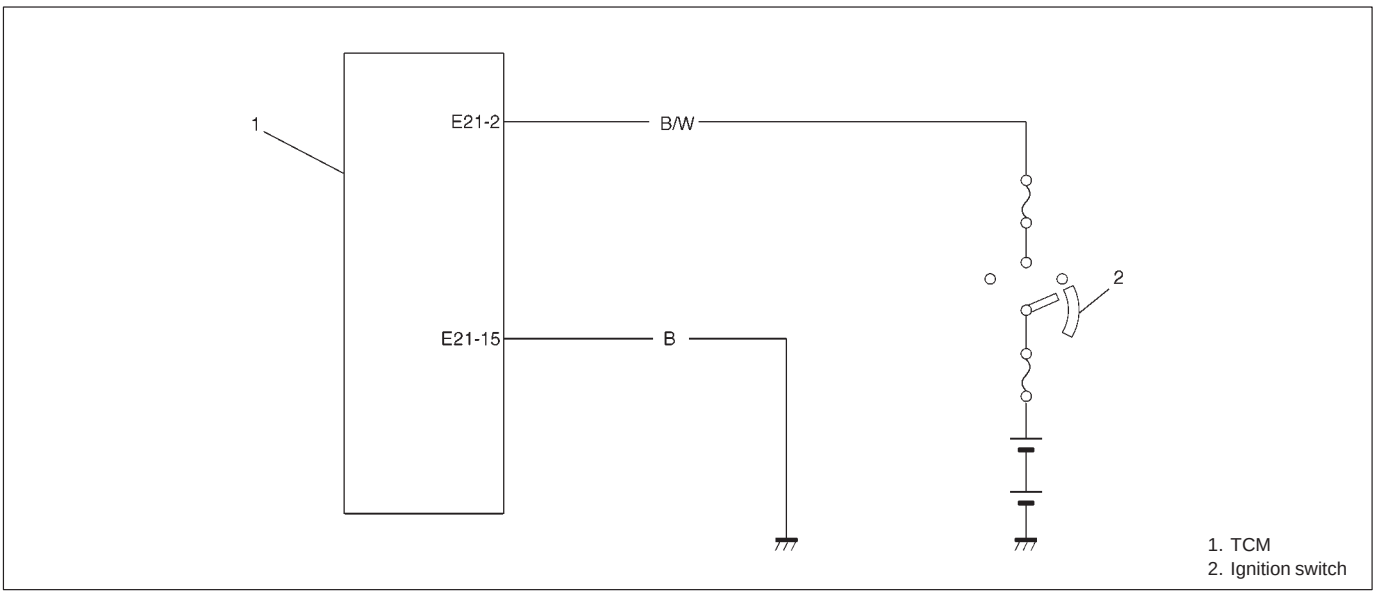

STEP	ACTION	YES	NO
1	1) Turn ignition switch ON. 2) Erase all DTCs referring to “HOW TO CLEAR DTC” in this section. 3) Turn ignition switch OFF. 4) Turn ignition switch ON once again and check for any DTC. Is it DTC P1702 (DTC No.52) or P0702 (DTC No.52)?	Replace TCM.	Could be a temporary malfunction of the TCM

DTC P1887 (DTC NO.57) VEHICLE SPEED SENSOR (VSS) SIGNAL CIRCUIT (DIFFERENCE IN DETECTED VEHICLE SPEED BETWEEN A/T OUTPUT SHAFT SPEED SENSOR AND VSS TOO WIDE)

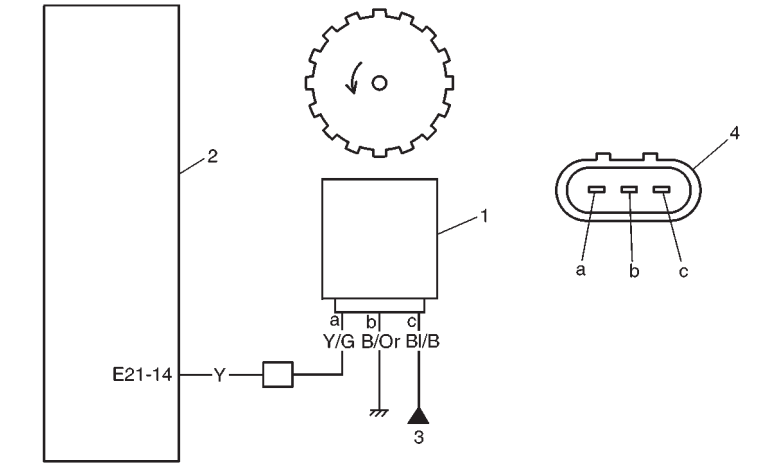

1. VSS
2. TCM
3. Power supply from main relay
4. VSS terminal
5. TCM coupler
   (Viewed from harness side)

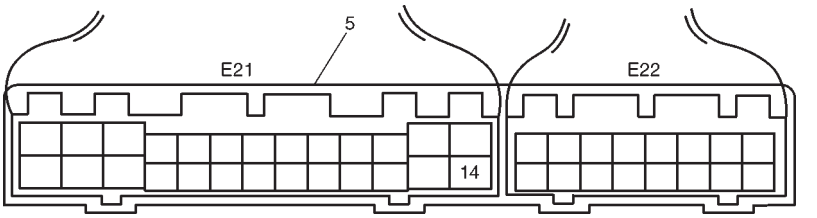

STEP	ACTION	YES	NO
1	Confirm if DTC P0720 (DTC No.31) is detected together. Is DTC P0720 (DTC No.31) detected?	Inspect and repair referring to DTC flow table of "A/T VEHICLE SPEED SENSOR" in this section.	Go to step 2.
2	1) Turn ignition switch OFF and disconnect VSS coupler. 2) Turn ignition switch ON and measure voltage between "Bl/B" wire terminal and "B/Or" wire terminal of disconnected harness side coupler. Is it 10 – 14V?	Go to step 3.	"Bl/B" or "B/Or" wire open or shorted.
3	Measure voltage between "Y/G" wire terminal of disconnected harness side coupler and engine ground. Is it 3V or more?	Go to step 4.	"Y/G" or "Y" wire open or shorted to ground.
4	1) Remove VSS referring to SECTION 7D. 2) Check VSS rotor referring to SECTION 7D. Is it in good condition?	Intermittent trouble or faulty TCM. Check for intermittent referring to "INTERMITTENT AND POOR CONNECTION" in SECTION 0A. If no trouble found, substitute a known-good TCM and recheck.	Replace VSS rotor.

INSPECTION OF TCM AND ITS CIRCUITS

TCM and its circuits can be checked at TCM wiring couplers by measuring voltage and resistance.

CAUTION:
TCM cannot be checked by itself, it is strictly prohibited to connect voltmeter or ohmmeter to TCM with coupler disconnected from it.

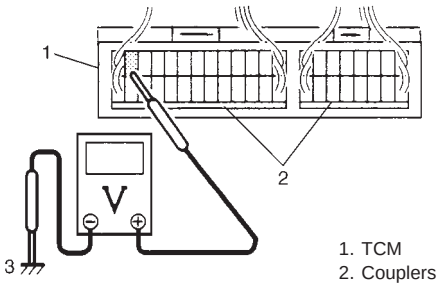

1. TCM
2. Couplers
3. Body ground

Voltage Check

1) Remove TCM from vehicle referring to "TRANSMISSION CONTROL MODULE REMOVAL" in this section.
2) Connect TCM couplers to TCM.
3) Check voltage at each terminal of couplers connected.

NOTE:
As each terminal voltage is affected by the battery voltage, confirm that it is 11 V or more when ignition switch is ON.

Terminal arrangement of TCM coupler (Viewed from harness side)

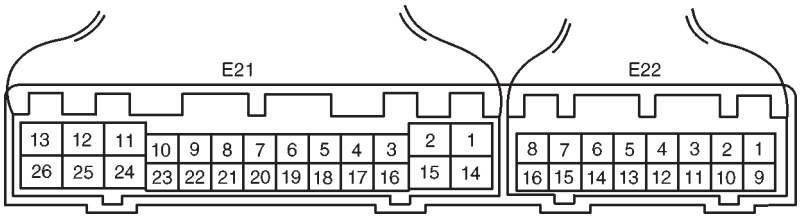

TERMINAL		CIRCUIT	STANDARD VOLTAGE	CONDITION
E21	2	IG power source	10 – 14 V	IG switch ON
	3	Transmission temperature sensor	–	–
	4	Brake switch	10 – 14 V	IG switch ON, brake pedal depressed
	5	A/C compressor	0 – 2 V	A/C OFF
			10 – 14 V	A/C ON
	8	D-range idle up signal	10 – 14 V	Select lever at “P” or “N” range
			0 – 1 V	Select lever other than “P” and “N” range
	14	Vehicle speed sensor	–	–
	15	Ground	–	–
	16	Transmission temperature sensor ground	–	–
	17	O/D cut switch	0 – 1 V	IG switch ON, O/D cut switch ON
			10 – 14 V	IG switch ON, O/D cut switch OFF
	18	Engine coolant temperature signal	10 – 14 V	IG switch ON, normal operating temperature of engine fluid
	20	A/T failure serial data	0 – 1 V	IG switch ON
	21	O/D OFF lamp	10 – 14 V	IG switch ON, O/D cut switch OFF
			0 – 1 V	IG switch ON, O/D cut switch ON
	22	Lock-up solenoid	0 – 1 V	IG switch ON, select lever at “P” range
	23	Shift solenoid-D (No.4)	0 – 1 V	IG switch ON, select lever at “P” range
	24	Shift solenoid-C (No.3)	0 – 1 V	IG switch ON, select lever at “P” range
			10 – 14 V	IG switch ON, select lever at “L” range
	25	Shift solenoid-B (No.2)	0 – 1 V	IG switch ON, select lever at “R” range
			10 – 14 V	IG switch ON, select lever at “P” range
	26	Shift solenoid-A (No.1)	0 – 1 V	IG switch ON, select lever at “P” range
E22	1	Transmission range “P” switch	10 – 14 V	IG switch ON, select lever at “P” range
			0 – 1 V	IG switch ON, select lever other than “P” range
	2	Transmission range “R” switch	10 – 14 V	IG switch ON, select lever at “R” range
			0 – 1 V	IG switch ON, select lever other than “R” range
	3	Transmission range “N” switch	10 – 14 V	IG switch ON, select lever at “N” range
			0 – 1 V	IG switch ON, select lever other than “N” range
	4	Diagnosis switch	10 – 14 V	IG switch ON, diagnosis switch terminal not grounded
	5	Engine speed signal	0 – 1 V	IG switch ON, leaving engine OFF
	6	Output shaft speed sensor (+)	–	–
	7	Input/Turbine speed sensor (+)	–	–
	8	Throttle opening signal	–	–
	9	Transmission range “D” switch	10 – 14 V	IG switch ON, select lever at “D” range
			0 – 1 V	IG switch ON, select lever other than “D” range
	10	Transmission range “2” switch	10 – 14 V	IG switch ON, select lever at “2” range
			0 – 1 V	IG switch ON, select lever other than “2” range
	11	Transmission range “L” switch	10 – 14 V	IG switch ON, select lever at “L” range
			0 – 1 V	IG switch ON, select lever other than “L” range
	12	Serial data link (SUZUKI scan tool)	10 – 14 V	IG switch ON
	13	Output shaft speed sensor shield	–	–
	14	Output shaft speed sensor (–)	–	–
	15	Input/Turbine speed sensor (–)	–	–

ON-VEHICLE SERVICE

MAINTENANCE SERVICE

FLUID LEVEL

LEVEL CHECK AT NORMAL OPERATING TEMPERATURE

1) Stop vehicle and place it level.
2) Apply parking brake and place chocks against wheels.
3) With selector at P position, start engine.
4) Warm up engine till fluid temperature reaches normal operating temperature (70 – 80°C/158 – 176°F). As a guide to check fluid temperature, warm up engine to normal operating temperature.

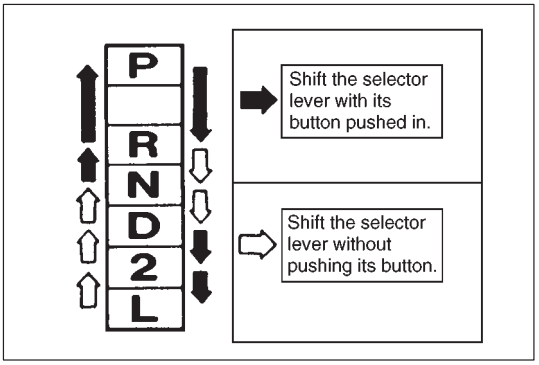

5) Keep engine idling and shift selector slowly to L and back to P position.
6) With engine idling, pull out dipstick, wipe it off with a clean cloth and put it back into place.

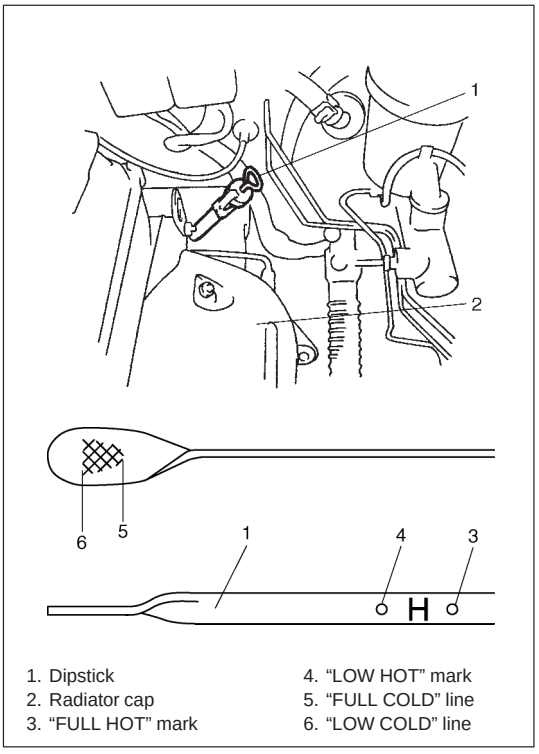

1. Dipstick
2. Radiator cap
3. "FULL HOT" mark
4. "LOW HOT" mark
5. "FULL COLD" line
6. "LOW COLD" line

7) Pull out dipstick again and check fluid level indicated on it. Fluid level should be between FULL HOT and LOW HOT. If it is below LOW HOT, add an equivalent of DEXRON -IIE or DEXRON -III, up to FULL HOT.

Fluid specification
An equivalent of DEXRON -IIE or DEXRON -III

NOTE:

- **DO NOT RACE ENGINE while checking fluid level, even after the engine start.**
- **DO NOT OVERFILL. Overfilling can cause foaming and loss of fluid through breather. Then slippage and transmission failure can result.**
- **Bringing the level from LOW HOT to FULL HOT requires 0.13 liters (0.27/0.23 US/Imp. pt).**
- **If vehicle was driven under high load such as pulling a trailer, fluid level should be checked about half an hour after it is stopped.**

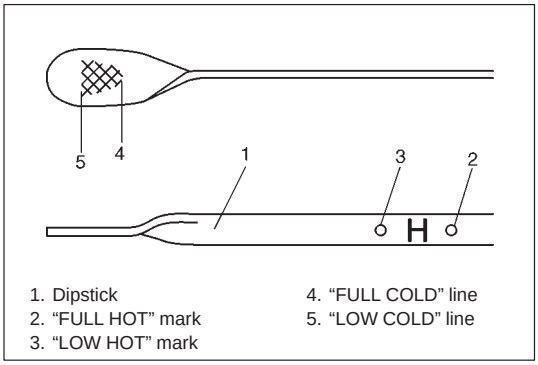

1. Dipstick
2. "FULL HOT" mark
3. "LOW HOT" mark
4. "FULL COLD" line
5. "LOW COLD" line

LEVEL CHECK AT ROOM TEMPERATURE

The fluid level check at room temperature (20 – 30°C/68 – 86°F) performed after repair or fluid change before test driving is just preparation for level check of normal operating temperature. The checking procedure itself is the same as that described previously. If the fluid level is between FULL COLD and LOW COLD, proceed to test drive. And when the fluid temperature has reached the normal operating temperature, check fluid level again and adjust it as necessary.

FLUID CHANGE INTERVALS

If the vehicle is usually driven under one or more of the following severe conditions, change the transmission fluid every 160,000 km (100,000 miles).

- In heavy city traffic. Where the outside temperature regularly reaches 32°C (90°F).
- In very hilly or mountainous areas.
- Commercial use, such as taxi, police vehicle or delivery service.

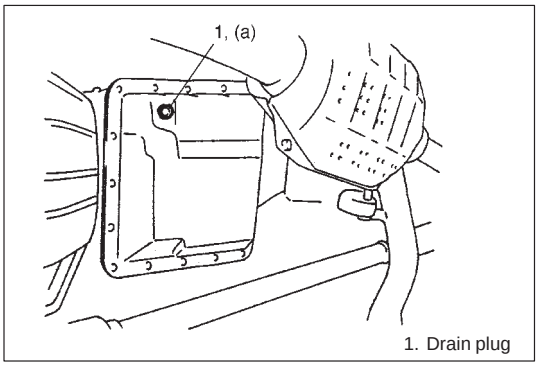

1. Drain plug

CHANGING FLUID

1) Lift up vehicle.
2) When engine has cooled down, remove drain plug from oil pan and drain A/T fluid.
3) Install drain plug.

Tightening Torque
(a): 22 N·m (2.2 kg-m, 16.0 lb-ft)

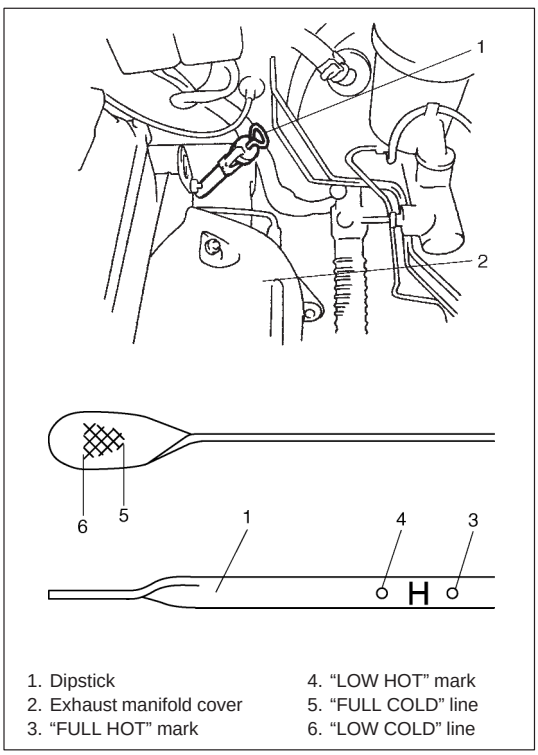

1. Dipstick
2. Exhaust manifold cover
3. "FULL HOT" mark
4. "LOW HOT" mark
5. "FULL COLD" line
6. "LOW COLD" line

4) Lower vehicle and fill proper amount of an equivalent of DEXRON -IIE or DEXRON -III.
5) Check fluid level according to procedure described under LEVEL CHECK AT NORMAL OPERATING TEMPERATURE.

Fluid specification
An equivalent of DEXRON -IIE or DEXRON -III

Fluid capacity	
When draining from drain plug hole	1.0 liters (2.11/1.76 US/Imp.pt.)
When overhauling	3.7 liters (7.82/6.51 US/Imp.pt.)

TRANSMISSION UNIT REPAIR OVERHAUL

DISMOUNTING

NOTE:
If automatic transmission is overhauled later on, draining A/T fluid at this point will facilitate work.

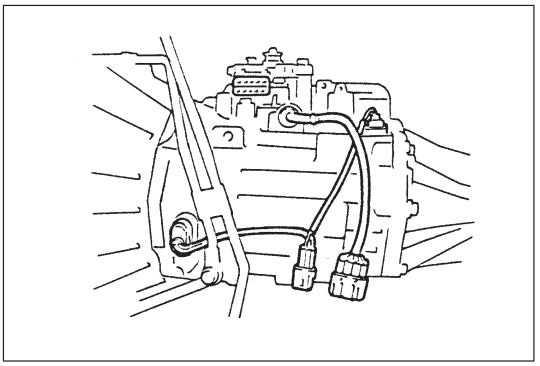

1) Remove following parts.
   - Propeller shafts No.1 and No.2 (refer to SECTION 4B)
   - Exhaust pipe (refer to SECTION 6K)
   - Negative cable from battery
2) Disconnect couplers. (2 couplers from wire harness and 1 from shift switch)

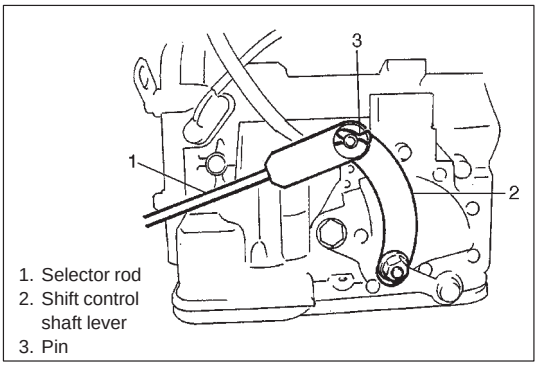

1. Selector rod
2. Shift control shaft lever
3. Pin

3) Remove selector rod from shift control shaft lever by removing pin.
4) Remove oil cooler hoses from pipes.

   NOTE:
   To avoid leakage of transmission fluid, plug open ends of oil cooler pipes and hoses right after they are disconnected.

5) Remove torque converter housing lower plate.

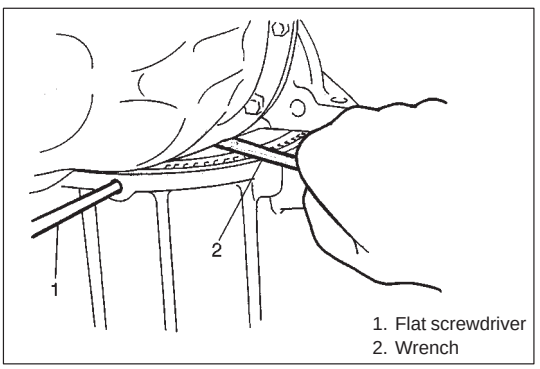

1. Flat screwdriver
2. Wrench

6) Remove drive plate bolts.
   To lock drive plate, engage a flat screwdriver with drive plate gear.
7) Remove starting motor.

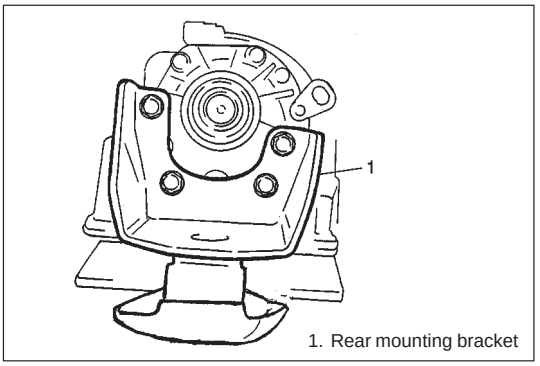

1. Rear mounting bracket

8) With transmission held up on jack, remove engine to transmission bolts and nuts.
9) Remove transmission rear mounting bracket.
10) Move transmission to the rear a little and lower it including torque converter.

WARNING:
Be sure to keep transmission horizontal throughout the work. Should it be tilted, torque converter may fall off and cause personal injury and A/T fluid may flow out.

REMOUNTING

WARNING:
When moving transmission assembly with torque converter equipped in it, be sure to keep it horizontal. Tilting it with its front facing down may allow converter to fall off. Whereby an injury may result.

For remounting, reverse dismounting procedure. Use specified torque as given below and left.

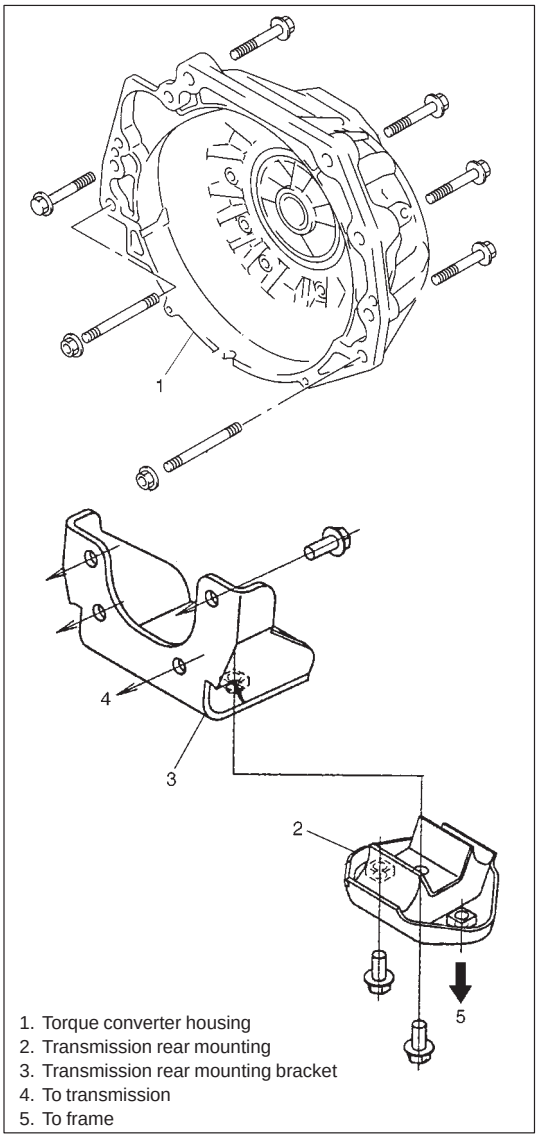

1. Torque converter housing
2. Transmission rear mounting
3. Transmission rear mounting bracket
4. To transmission
5. To frame

Tightening torque	N·m	kg-m	lb-ft
Exhaust pipe to manifold bolts	50	5.0	36.5
Muffler to exhaust pipe bolts	50	5.0	36.5
Universal joint flange bolts and nuts	50	5.0	36.5
Drive plate bolts	19	1.9	14.0
Engine to transmission bolts and nuts	80	8.0	58.0
Rear mounting bracket to transmission bolt	25	2.5	18.0
Rear mounting to bracket bolt	25	2.5	18.0
Frame to rear mounting bolts	25	2.5	18.0

- Clamp wiring harness and hoses securely.
- Refer to page 7B-53 for adjusting procedure of selector rod.
- Follow fluid level check procedure in page 7B-48 for refilling automatic transmission fluid, its level adjusting and fluid specification.
- Connect battery, and confirm that engine and transmission function acceptably.
- When remounting drive plate, use specified bolts.

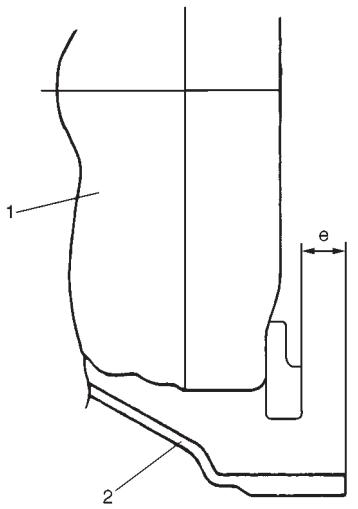

1. Torque converter
2. Torque converter housing

UNIT ASSEMBLY

NOTE:
For the descriptions of "TRANSMISSION UNIT REPAIR UNIT ASSEMBLY" other than the following specification, refer to the same item of the Service Manual mentioned in FOREWORD of this manual.

Distance "e": More than 20.0 mm (0.787 in.)

TIGHTENING TORQUE SPECIFICATIONS

	Fastening portion	Tightening torque		
		N·m	kg-m	lb-ft
ON-VEHICLE SERVICE	Drain plug	22.0	2.2	16.0
	Shift switch bolt	18.0	1.8	13.0
	A/T VSS bolt	8.0	0.8	6.0
	Turbine rev. sensor bolt	8.0	0.8	6.0
	Selector rod nut	7.0	0.7	5.0
	Connector clamp bracket bolt	8.0	0.8	6.0
	A/T oil pan bolt	7.5	0.75	5.5
	A/T fluid temp. sensor bolt	8.0	0.8	6.0
	Oil strainer bolt	8.0	0.8	6.0
	Selector lever ass'y bolt	18.0	1.8	13.0
	Shift control shaft nut	13.0	1.3	9.5
	Solenoid valve bolt	8.0	0.8	6.0
	Interlock cable screw	2.2	0.22	1.6
	Interlock cable bracket nut	13.0	1.3	9.5
MOUNTING	Transmission rear mounting blot	25.0	2.5	18.0
	Rear mounting bracket bolts			
	Frame to rear mounting bolts			
	Transmission mounting ass'y bolt and nut	80.0	8.0	58.0
TRANSMISSION	Detent spring ass'y bolts	15.0	1.5	11.0
	Oil pump ass'y – transmission case fastening bolts	12.0	1.2	8.5
	Torque converter housing bolts	19.0	1.9	14.0
	Wire-to-solenoid bolt	8.0	0.8	6.0
	Upper valve body – lower valve body fastening bolts	5.5	0.55	4.0
	Valve body ass'y – transmission case fastening bolts	10.0	1.0	7.5
	Oil cooler pipe union bolts	36.0	3.6	26.0
	Oil cooler pipe ass'y – transmission case fastening bolt	6.0	0.6	4.5
	Extension case bolt	17.0	1.7	12.5

SPECIAL TOOLS

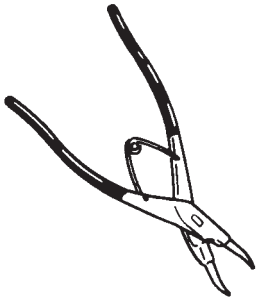

09900-06108
Snap ring plier
(Closing type)

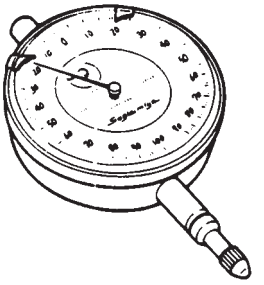

09900-20606
Dial gauge

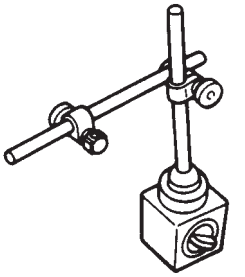

09900-20701
Magnetic stand

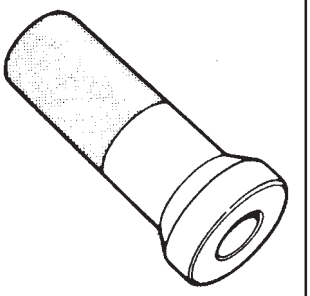

09913-76010
Bearing installer

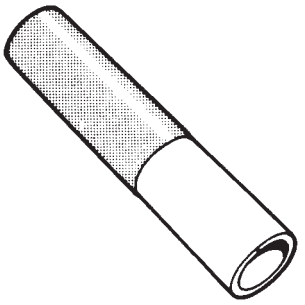

09913-80112
Bearing installer

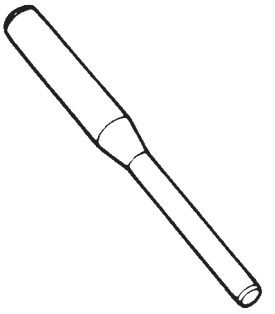

09925-78210
Spring pin remover (6 mm)

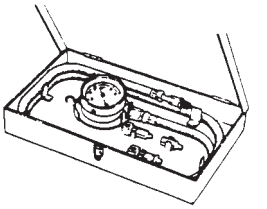

09925-37810
Oil pressure gauge

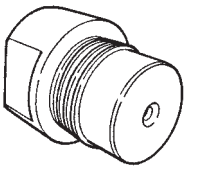

09926-26030
Clutch clearance
checking base No.1

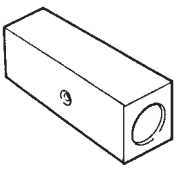

09926-26040
Clutch clearance
checking base No.2

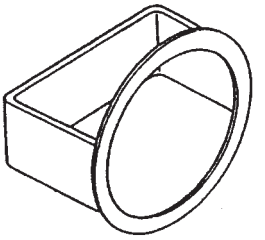

09926-96010
Clutch spring compressor

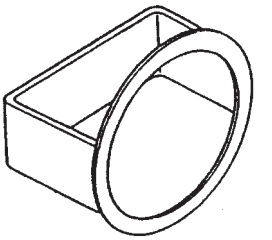

09926-96020
Clutch spring compressor

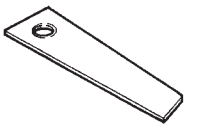

09952-06010
Dial gauge plate No.1

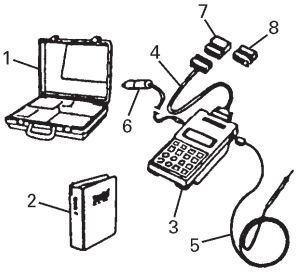

1. Storage case
2. Operator's manual
3. Tech 1A
4. DLC cable
5. Test lead/probe
6. Power source cable
7. DLC cable adaptor
8. Self-test adaptor

09931-76011
Tech 1A kit

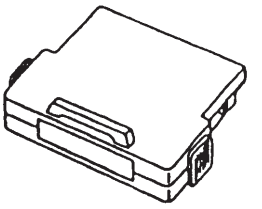

Mass storage cartridge

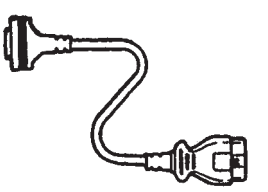

09931-76030
16/14 pin DLC cable

REQUIRED SERVICE MATERIALS

MATERIALS	RECOMMENDED SUZUKI PRODUCT	USE
Automatic transmission fluid	An equivalent of DEXRON -IIE or DEXRON -III	● Automatic transmission ● Parts lubrication when installing
Lithium grease	SUZUKI SUPER GREASE C (99000-25030)	● Retaining parts in place when assembling ● Oil seal lips ● Oil pump D-ring
	SUZUKI SUPER GREASE A (99000-25010)	● Rod ends ● Converter center cup

SECTION 7C

CLUTCH

NOTE:
For the descriptions (items) not found in this section, refer to the same section of the Service Manual mentioned in FOREWORD of this manual.

CONTENTS

GENERAL DESCRIPTION 7C-2
ON-VEHICLE SERVICE 7C-3
Maintenance Service 7C-3
UNIT REPAIR OVERHAUL 7C-4
Clutch Cover, Clutch Disc, Flywheel And Release Bearing 7C-4
TIGHTENING TORQUE SPECIFICATIONS 7C-8
REQUIRED SERVICE MATERIALS 7C-8
SPECIAL TOOLS 7C-8

GENERAL DESCRIPTION

The clutch is a diaphragm-spring clutch of a dry single disc type. The diaphragm spring is of a tapering finger type, which is a solid ring in the outer diameter part, with a series of tapering fingers pointing inward. The disc, carrying three torsional coil springs, is slidably mounted on the transmission input shaft with a serration fit.

The clutch cover is secured to the flywheel, and carries the diaphragm spring in such a way that the peripheral edge of the spring pushes on the pressure plate against the flywheel (with the disc in between), when the clutch release bearing is held back: This is the engaged condition of the clutch.

Depressing the clutch pedal causes the release bearing to advance and push on the tips of the tapering fingers of the diaphragm spring. When this happens, the diaphragm spring pulls the pressure plate away from the flywheel, thereby interrupting the flow of drive from flywheel through clutch disc to transmission input shaft.

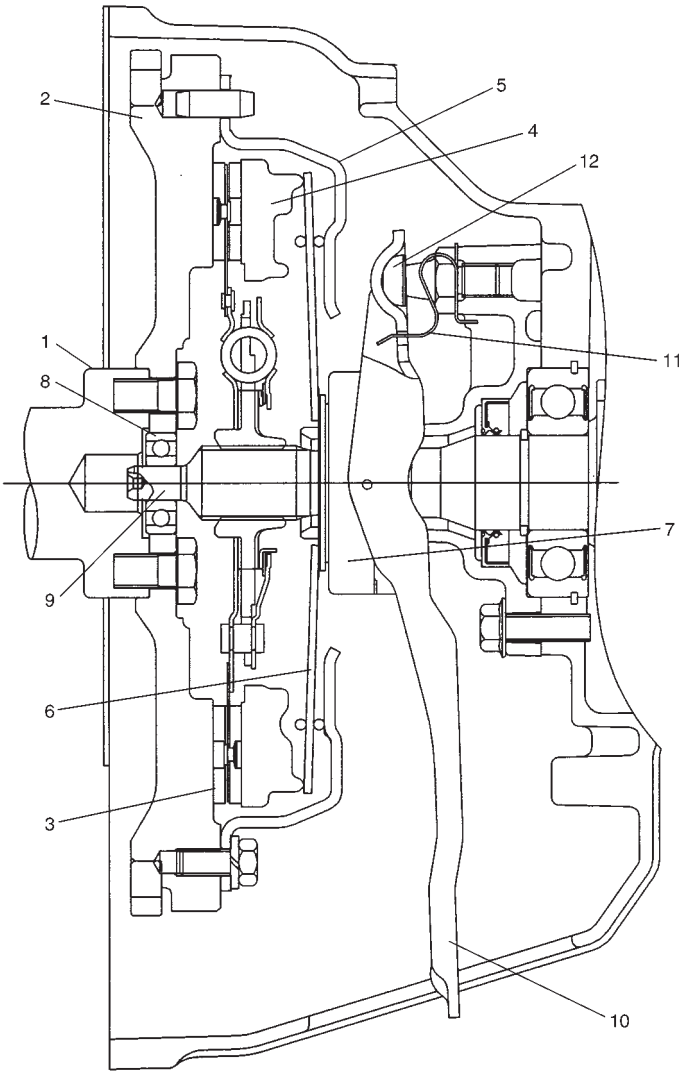

1. Crankshaft
2. Flywheel
3. Clutch disc
4. Pressure plate
5. Clutch cover
6. Diaphragm spring
7. Release bearing
8. Input shaft bearing
9. Input shaft
10. Release fork
11. Release fork return spring
12. Clutch release support

ON-VEHICLE SERVICE

MAINTENANCE SERVICE

CLUTCH CABLE ROUTING

1) For left-hand side steering vehicle.

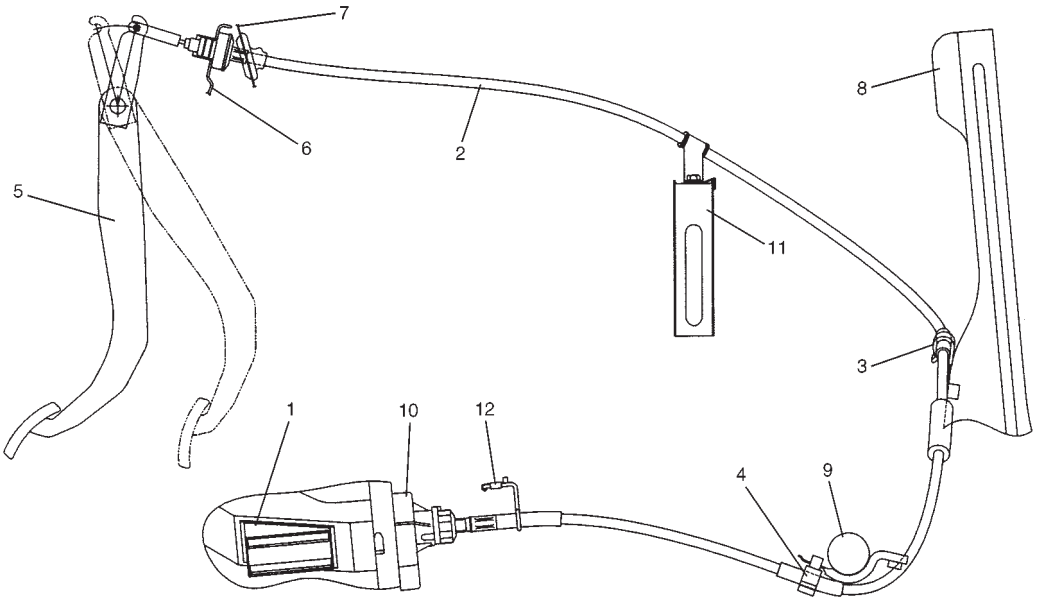

1. Clutch housing cap
2. Clutch cable
3. Clutch cable clamp No.1
4. Clutch cable clamp No.2
5. Clutch pedal
6. Pedal bracket
7. Dash panel
8. Radiator stay
9. Cross member
10. Clutch cable bracket
11. Air cleaner bracket
12. Clutch cable clamp No.3

2) For right-hand side steering vehicle.

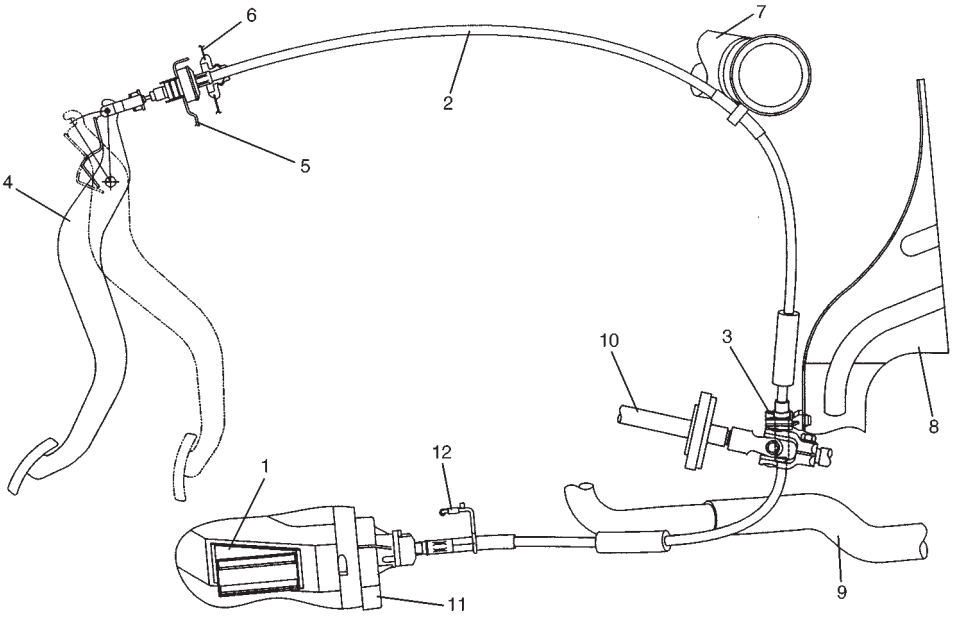

1. Clutch housing cap
2. Clutch cable
3. Clutch cable clamp No.1
4. Clutch pedal
5. Pedal bracket
6. Dash panel
7. Air cleaner outlet hose
8. Radiator stay
9. Radiator outlet hose
10. Steering lower shaft
11. Clutch cable bracket
12. Clutch cable clamp No.2

UNIT REPAIR OVERHAUL

CLUTCH COVER, CLUTCH DISC, FLYWHEEL AND RELEASE BEARING

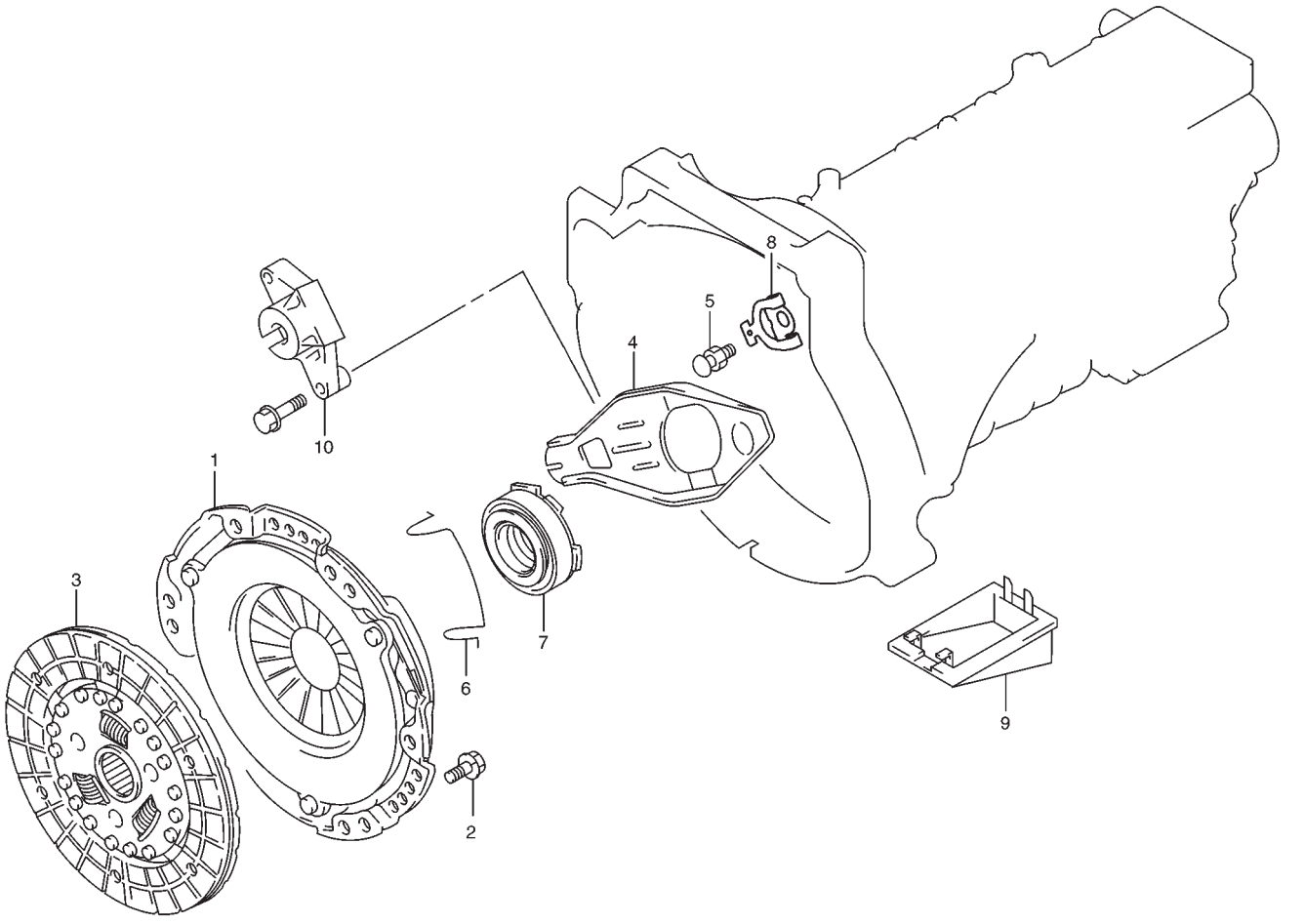

1. Clutch cover
2. Bolt
3. Clutch disc
4. Release fork
5. Clutch release fork support
6. Release bearing clip
7. Release bearing
8. Release fork return spring
9. Clutch housing cap
10. Clutch cable bracket

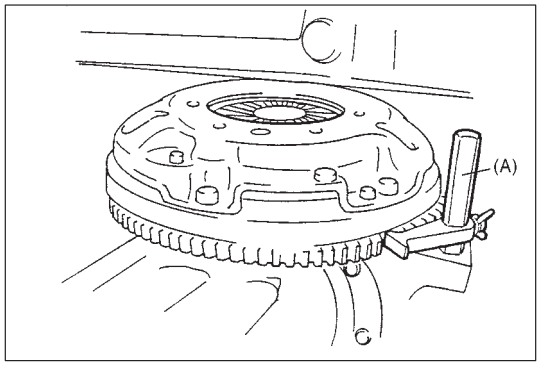

REMOVAL

1) Removal of clutch presupposes that the transmission has been separated from engine according to the method outlined in SECTION 7A TRANSMISSION.
2) Hold flywheel stationary with special tool and remove bolts securing clutch cover to flywheel, and take off clutch cover and disc.

Special Tool
(A): 09924-17810

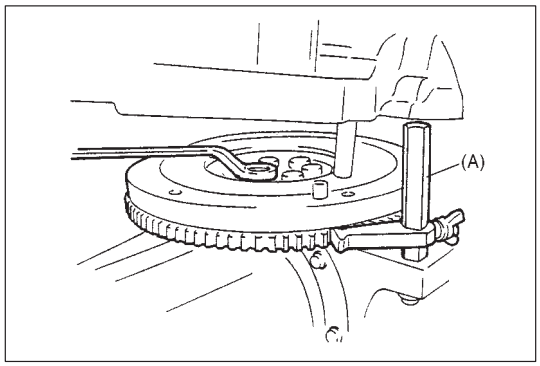

3) Hold flywheel stationary with special tool and remove bolts securing flywheel to crank shaft, and take off flywheel.

Special Tool
(A): 09924-17810

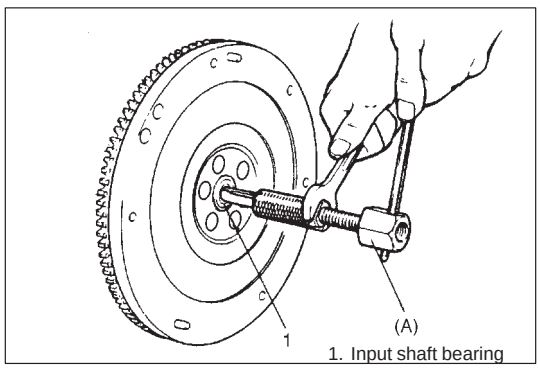

1. Input shaft bearing

4) Use bearing remover (special tool) for pulling out of input shaft bearing.

Special Tool
(A): 09921-26020

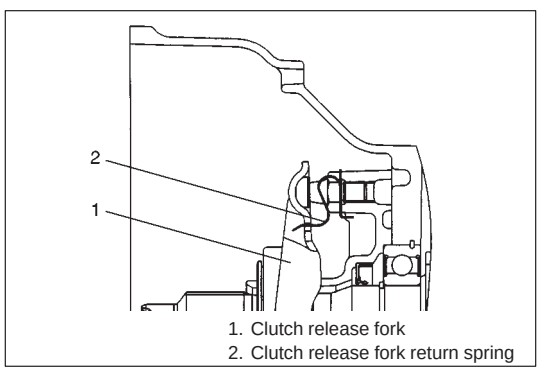

1. Clutch release fork
2. Clutch release fork return spring

5) Detach clutch release fork from clutch release fork return spring.

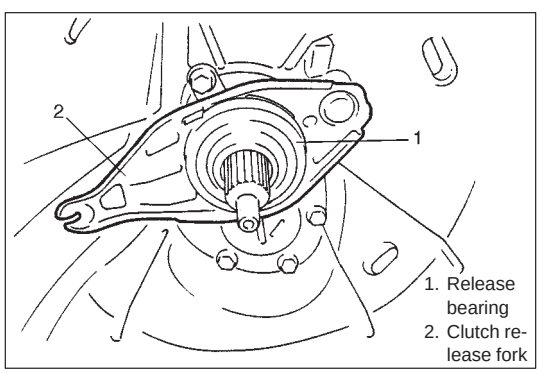

1. Release bearing
2. Clutch release fork

6) Remove release bearing and clutch release fork.

INSTALLATION

NOTE:

- **Before installing flywheel, clutch disc and clutch cover, hoist vehicle and lift transmission by jack up to transmission installation position.**
- **Before assembling, make sure that flywheel surface and pressure plate surface have been cleaned and dried thoroughly.**

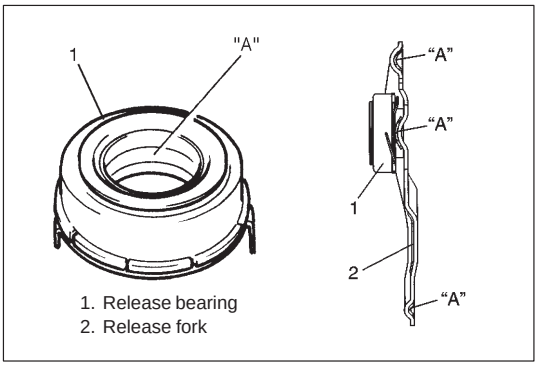

1. Release bearing
2. Release fork

1) Before installing retainer, apply grease to release bearing inner surface and release fork.

"A" Grease: SUZUKI SUPER GREASE A 99000-25010

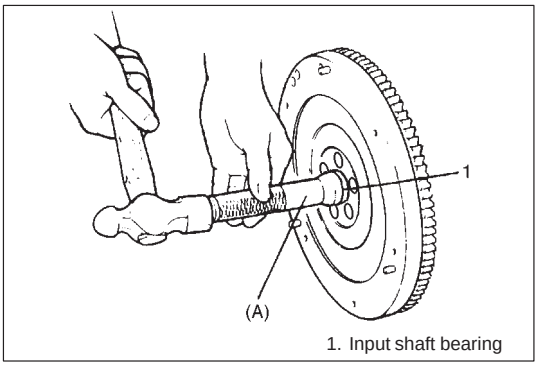

1. Input shaft bearing

2) Install input shaft bearing to flywheel using bearing installer (special tool).

Special Tool
(A): 09925-98210

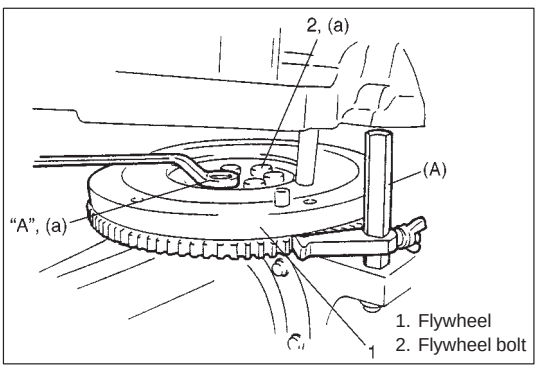

1. Flywheel
2. Flywheel bolt

3) Install flywheel to crankshaft and tighten bolts applied with sealant at thread part to specification.

Special Tool
(A): 09924-17810

"A": Sealant 99000-31110

Tightening Torque
(a): 76 N·m (7.6 kg-m, 55.0 lb-ft)

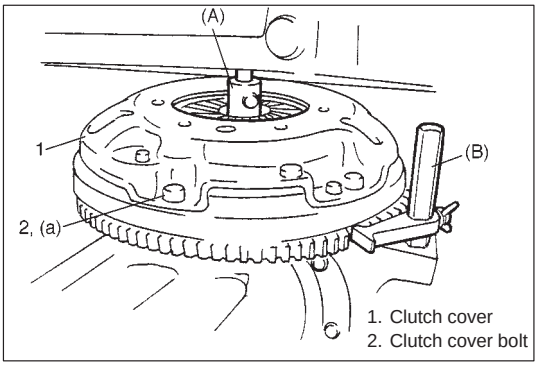

1. Clutch cover
2. Clutch cover bolt

4) Using special tool (clutch center guide), install clutch disc and clutch cover.
Tighten clutch cover bolts to specification using special tool (Flywheel holder).

Special Tool
(A): 09923-36320
(B): 09924-17810

Tightening Torque
(a): 23 N·m (2.3 kg-m, 17.0 lb-ft)

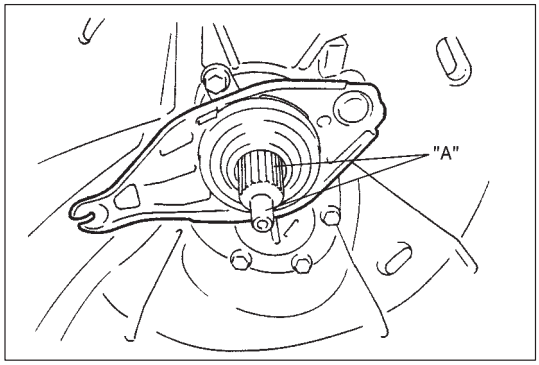

5) Slightly apply grease to input shaft. Then join transmission with engine. Refer to TRANSMISSION REMOUNTING of Section 7A.

"A": Grease 99000-25210

NOTE:
Turn crankshaft with wrench from front while inserting transmission input shaft to clutch disc until splines mesh.

TIGHTENING TORQUE SPECIFICATIONS

Be sure to torque each nut or bolt, if loosened, to specification given below.
If specified tightening torque for particular bolt or nut is not included here, refer to SECTION 0A of this manual.

Fastening Parts	Tightening Torque		
	N·m	kg-m	lb-ft
Flywheel bolts	76	7.6	55.0
Clutch cover bolts	23	2.3	17.0
Clutch release support	29	2.9	21.0

REQUIRED SERVICE MATERIALS

MATERIAL	RECOMMENDED SUZUKI PRODUCT	USE
Lithium grease	SUZUKI SUPER GREASE A (99000-25010)	● Cable junction with pedal shaft arm ● Release fork ● Inside of release bearing
	SUZUKI SUPER GREASE I (99000-25210)	● Input shaft spline and front end
Sealant	SUZUKI BOND No.1215 (99000-31110)	● Fly wheel bolts

SPECIAL TOOLS



09921-26020
Bearing remover
(for input shaft bearing)

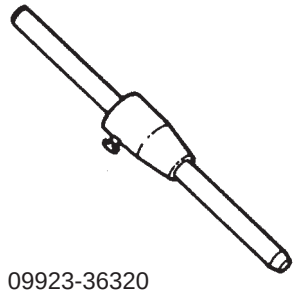

09923-36320
Clutch center guide

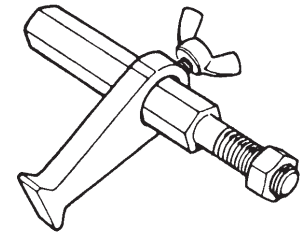

09924-17810
Flywheel holder

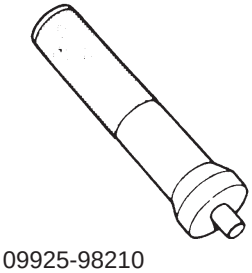

09925-98210
Input shaft bearing
installer

SECTION 8

BODY ELECTRICAL SYSTEM

WARNING:
For vehicles equipped with Supplemental Restraint (Air Bag) System:

- **Service on and around the air bag system components or wiring must be performed only by an authorized SUZUKI dealer. Refer to "Air Bag System Components and Wiring Location View" under "General Description" in air bag system section in order to confirm whether you are performing service on or near the air bag system components or wiring. Please observe all WARNINGS and "Service Precautions" under "On-Vehicle Service" in air bag system section before performing service on or around the air bag system components or wiring. Failure to follow WARNINGS could result in unintentional activation of the system or could render the system inoperative. Either of these two conditions may result in severe injury.**
- **Technical service work must be started at least 90 seconds after the ignition switch is turned to the "LOCK" position and the negative cable is disconnected from the battery. Otherwise, the system may be activated by reserve energy in the Sensing and Diagnostic Module (SDM).**

NOTE:
For the descriptions (items) not found in this section, refer to the same section of the Service Manual mentioned in the FOREWORD of this manual.

CONTENTS

GENERAL DESCRIPTION 8-2
Combination Meter 8-2
ON-VEHICLE SERVICE 8-3
Turn Signal and Hazard Warning Light 8-3
Ignition Switch 8-4
Engine Coolant Temperature Meter and Sensor Unit 8-5
Rear Window Defogger 8-5
Windshield Wipers 8-6
Rear Wiper and Washer 8-6

GENERAL DESCRIPTION

COMBINATION METER

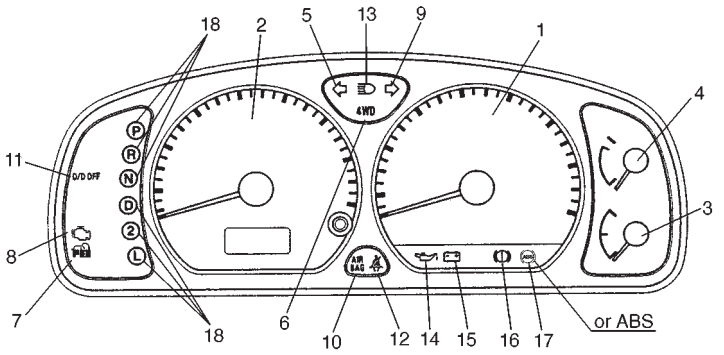

1. Tachometer
2. Speedometer
3. Fuel lever meter
4. Water temperature meter
5. Turn signal pilot light (LH)
6. 4WD indicator (if equipped)
7. Immobilizer warning light (if equipped)
8. CHECK ENGINE light
9. Turn signal pilot light (RH)
10. AIR BAG warning light (if equipped)
11. O/D OFF light (A/T vehicle only)
12. Fasten seat belt light (if equipped)
13. High beam light
14. Oil pressure warning light
15. Charge warning light
16. Brake warning light
17. ABS warning light (if equipped)
18. Shift position indicator (A/T vehicle, if equipped)

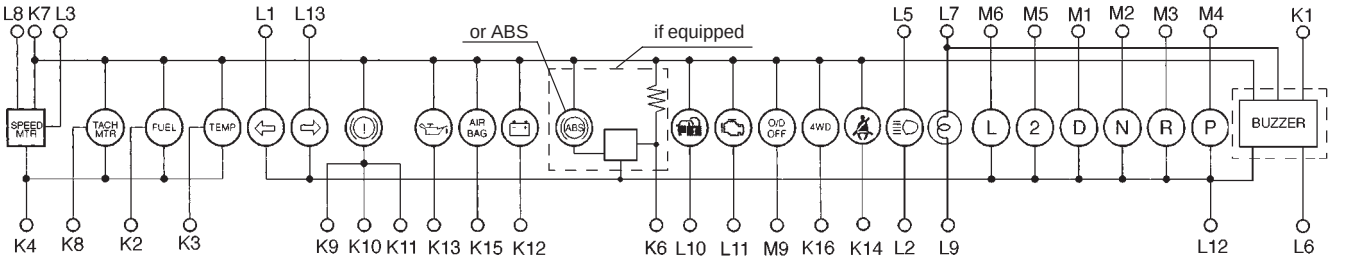

NOTE:
Terminal arrangement of coupler viewed from harness side.

Coupler K

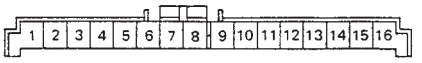

Coupler L

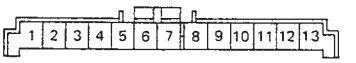

Coupler M

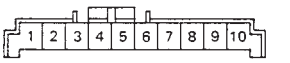

Coupler K

1.	To ignition switch	Bl/G
2.	To fuel level gauge	Y/R
3.	To ECT sensor	Y/W
4.	To ground	B/Or
5.	Blank	—
6.	To ABS control module (ABS controller) (if equipped)	R/Bl
7.	To ignition switch	B/W
8.	To ECM	Br
9.	To ignition switch	V/R
10.	To brake fluid level switch	R/B
11.	To parking brake switch	R/G
12.	To alternator	W/R
13.	To oil pressure switch	Y/B or Y/Bl
14.	To seat belt switch (if equipped)	Lg
15.	To SDM (air bag controller) (if equipped)	Bl
16.	To 4WD control module (4WD controller) (if equipped)	Bl

Coupler L

1.	To combination switch (turn L)	G/R
2.	To combination switch (dimmer sw)	R
3.	To VSS	Y/G
4.	Blank	—
5.	To main fuse	W/Bl
6.	To door switch	B/Y
7.	To combination switch (dimmer sw)	R/Y
8.	To main fuse	W
9.	To ground	B
10.	To ECM (if equipped)	R/G
11.	To ECM	V/Y
12.	To ground	B
13.	To combination switch (turn R)	G/Y

Coupler M

1.	To transmission range switch (A/T vehicle, if equipped)	G/R
2.	To transmission range switch (A/T vehicle, if equipped)	Or
3.	To transmission range switch (A/T vehicle, if equipped)	R
4.	To transmission range switch (A/T vehicle, if equipped)	Or/B
5.	To transmission range switch (A/T vehicle, if equipped)	G
6.	To transmission range switch (A/T vehicle, if equipped)	G/W
7.	Blank	—
8.	Blank	—
9.	To TCM (A/T vehicle, if equipped)	Bl/Y
10.	Blank	—

LH steering vehicle shown

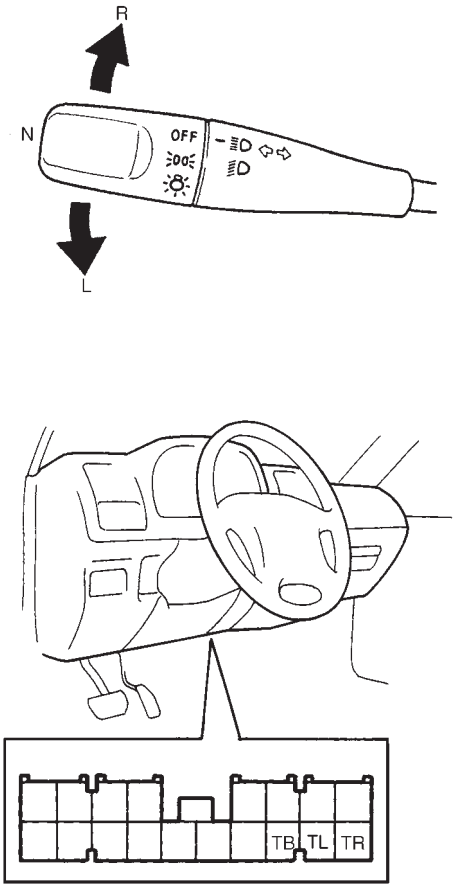

ON-VEHICLE SERVICE

TURN SIGNAL AND HAZARD WARNING LIGHT

TURN SIGNAL LIGHT SWITCH

INSPECTION

1) Disconnect negative cable at battery.
2) Disconnect combination switch lead wire coupler.
3) Use a circuit tester to check the continuity at each switch position shown below.

Terminal / Wire Color / Switch Position	TL	TB	TR
	G/R	G	G/Y
L	○	○	
N			
R		○	○

REMOVAL AND INSTALLATION

Refer to COMBINATION SWITCH/CONTACT COIL AND COMBINATION SWITCH ASSEMBLY in Section 3C for details.

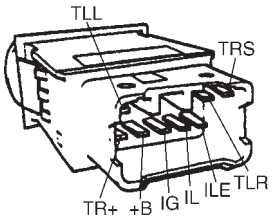

HAZARD SWITCH

INSPECTION

Check continuity between terminals at each switch position shown below.

Terminal / Hazard SW	+B	TR+	IG	TRS	TLL	TLR	IL	ILE
OFF		○	○				○	○
ON	○	○		○	○	○	○	○

LH steering vehicle shown

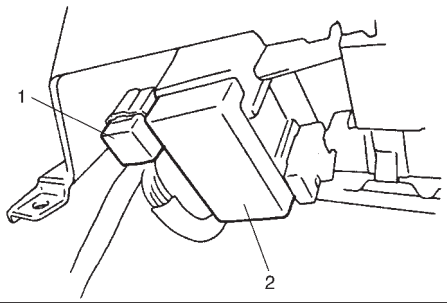

HAZARD RELAY

The turn signal/hazard relay (1) is located near the fuse box (2).

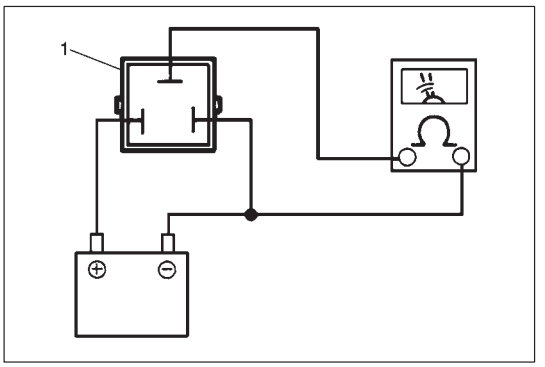

INSPECTION

Connect battery and tester as shown left.
Unless a continued click sound is heard, replace relay (1).

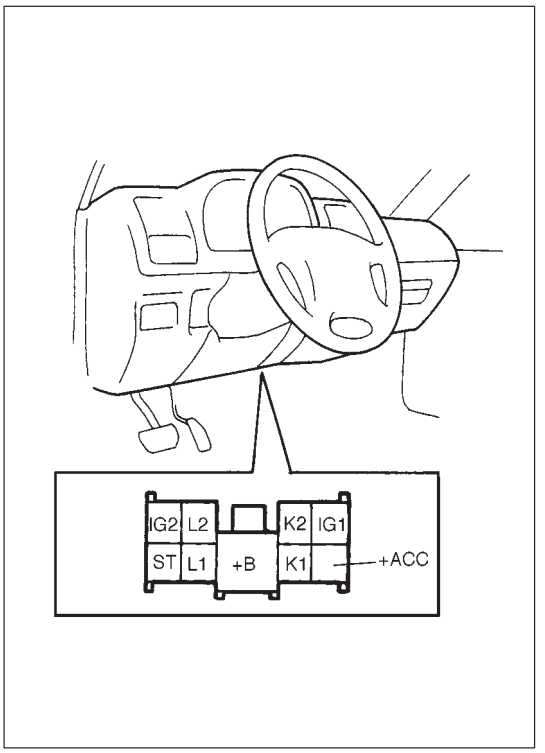

IGNITION SWITCH

INSPECTION

1) Disconnect negative cable at battery.
2) Disconnect ignition switch lead wire coupler.
3) Use a circuit tester to check the continuity at each switch position. If any continuity is not obtained, replace main switch.

Terminal / Wire color / Key / Position		+B	+ACC	IG1	IG2	ST	L1	L2	K1	K2
		W/G	BI	B/W	Y/B	B/Y	B	B	G	G
OUT	LOCK	○								
IN	ACC	○	○						○	○
	ON	○	○	○	○					
	START	○		○		○	○	○		

ACC : Accessory

REMOVAL AND INSTALLATION

Refer to STEERING LOCK (IGNITION SWITCH) in Section 3C for details.

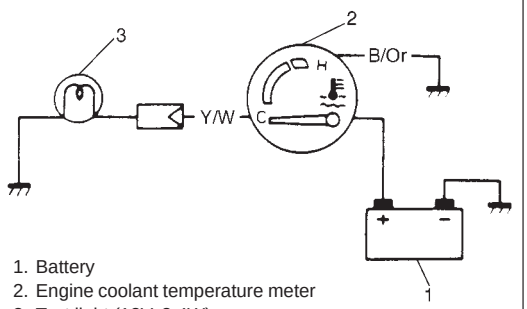

1. Battery
2. Engine coolant temperature meter
3. Test light (12V, 3.4W)

ENGINE COOLANT TEMPERATURE METER AND SENSOR UNIT

ENGINE COOLANT TEMPERATURE METER

INSPECTION

1) Disconnect Y/W lead wire going to sender gauge installed to thermostat case.
2) Use a bulb (12V 3.4W) in position to ground wire as illustrated.
3) Turn main switch ON. Confirm that bulb is lighted with meter pointer fluctuating several seconds thereafter.
   If not, replace.

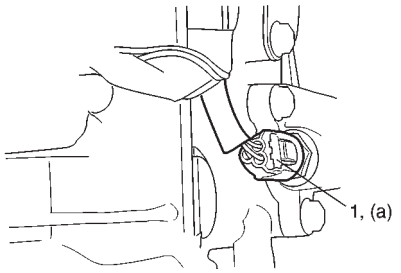

ENGINE COOLANT TEMPERATURE SENSOR

REMOVAL AND INSTALLATION

1) Disconnect negative cable at battery.
2) Drain cooling system.
3) Disconnect coupler from ECT sensor (1).
4) Remove ECT sensor from intake manifold.

Reverse removal procedure in case of installation noting the following.

- Clean mating surface of sensor and intake manifold.
- Check O-ring for damage and replace if necessary.
- Tighten ECT sensor to specified torque.

Tightening Torque
(a): 15 N·m (1.5 kg-m, 11.0 lb-ft)

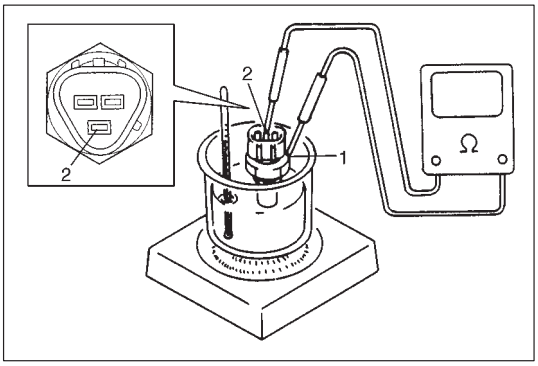

INSPECTION

1) Warm up ECT sensor (1) observing resistance between sensor terminal (2) and sensor unit (1). Resistance should be decreased with increase of its temperature.
2) Check resistance between sensor terminal (2) and sensor unit (1) shown below. If check result is not as specified, replace sensor.

Temperature	Resistance
50°C (122°F)	136 - 216 Ω

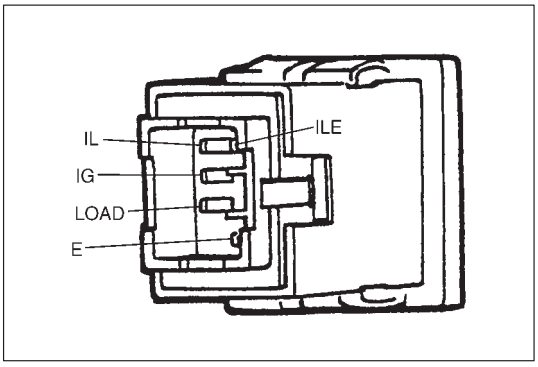

REAR WINDOW DEFOGGER

DEFOGGER SWITCH

INSPECTION

Use a circuit tester to check defogger switch for continuity.
If switch has no continuity between terminals, replace.

Terminal / Defogger SW	IG	E	LOAD	IL	ILE
OFF		○—○		○—○	
ON	○—○	○—○		○—○	

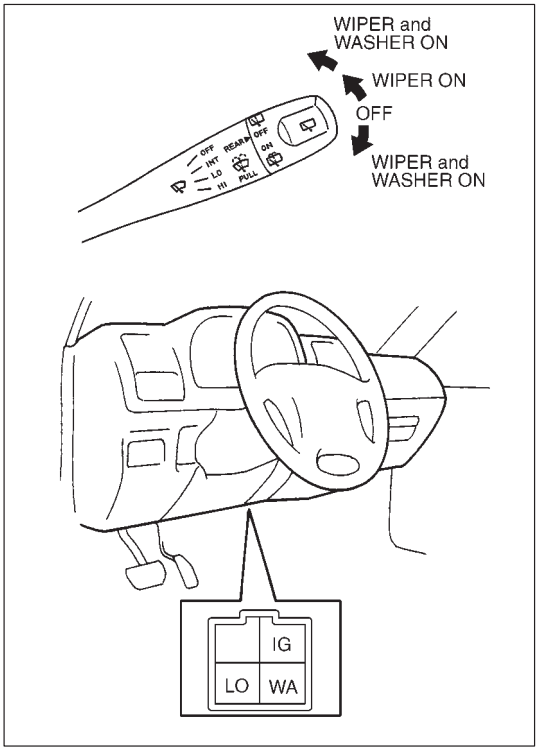

WINDSHIELD WIPERS

REAR WIPER AND WASHER

INSPECTION

WIPER AND WASHER SWITCH

Check for continuity between terminals at each switch position.

Terminal / Wire coler / Position	IG	LO	WA
	B	W	BL
OFF			
WIPER ON	○	○	
WIPER and WASHER ON	○	○	○

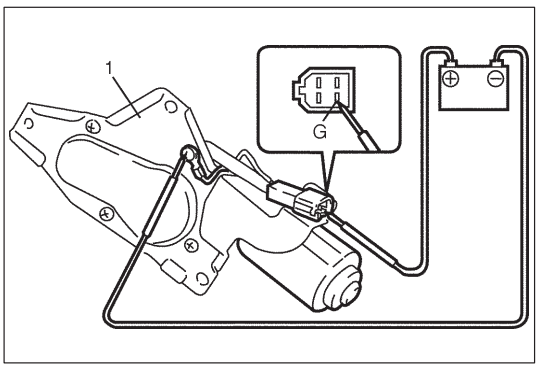

WIPER MOTOR

1) TESTING WIPER MOTOR

As shown left, use a 12V battery to connect its (+) and (–) terminals to terminal “G” and wiper bracket (1) respectively. Then motor should rotate at 35 to 45 rpm.

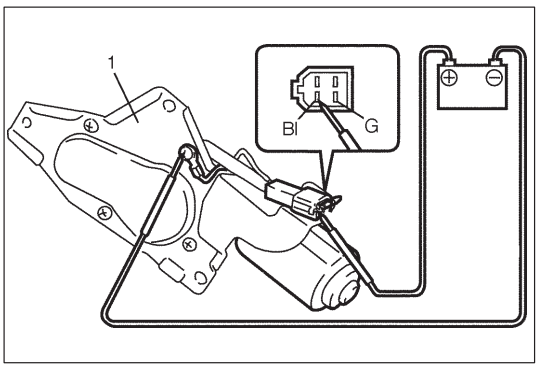

2) TESTING AUTOMATIC STOP ACTION

a) First, connect battery (+) terminal to terminal “G” and battery (–) terminal to wiper bracket (1) and let the motor turn.
b) Then disconnect terminal “G” from battery and let the motor stop.
c) Connect terminal “BI” to battery (+) terminal. Observe the wiper motor turns once again, then stops at a given position.
d) Repeat these steps several times, and inspect if the motor stops at the given position every time.

SECTION 8G

IMMOBILIZER CONTROL SYSTEM (IF EQUIPPED)

WARNING:
For vehicles equipped with Supplemental Restraint (Air Bag) System

- **Service on and around the air bag system components or wiring must be performed only by an authorized SUZUKI dealer. Refer to "Air Bag System Components and Wiring Location View" under "General Description" in air bag system section in order to confirm whether you are performing service on or near the air bag system components or wiring. Please observe all WARNINGS and "Service Precautions" under "On-Vehicle Service" in air bag system section before performing service on or around the air bag system components or wiring. Failure to follow WARNINGS could result in unintentional activation of the system or could render the system inoperative. Either of these two conditions may result in severe injury.**
- **Technical service work must be started at least 90 seconds after the ignition switch is turned to the "LOCK" position and the negative cable is disconnected from the battery. Otherwise, the system may be activated by reserve energy in the Sensing and Diagnostic Module (SDM).**

NOTE:
Whether the immobilizer indicator lamp is used in the particular vehicle or not depends on vehicle specifications. If there is an heated oxygen sensor (sensor 2) on exhaust pipe, the vehicle is equipped with immobilizer indicator lamp and if there isn't, it is not equipped with immobilizer indicator lamp. For details of heated oxygen sensor (sensor 2), refer to Section 6E in this manual.

CONTENTS

GENERAL DESCRIPTION 8G- 3

DIAGNOSIS 8G- 7
Precautions in Diagnosing Troubles 8G- 7
Diagnostic Flow Table <Vehicle not equipped with immobilizer indicator lamp> 8G- 8
Diagnostic Flow Table <Vehicle equipped with immobilizer indicator lamp> 8G- 9
Diagnostic Trouble Code Check (Immobilizer Control Module) 8G-10
Diagnostic Trouble Code Check (ECM) 8G-11
Diagnostic Trouble Code Table 8G-13
TABLE A DTC is not Output from Diagnostic Output Terminal (For Vehicle Not Equipped with Air Bag System) 8G-14
TABLE B Immobilizer Indicator Lamp Check for Vehicle Equipped with Immobilizer Indicator Lamp (Immobilizer Indicator Lamp does not Light at Ignition Switch ON) 8G-15
TABLE C Immobilizer Indicator Lamp Check for Vehicle Equipped with Immobilizer Indicator Lamp (Immobilizer Indicator Lamp Remains On after Engine Starts) 8G-16
TABLE D DTC is not Output from Immobilizer Control Module (For Vehicle Equipped with Air Bag System) 8G-17
DTC 11/32 Transponder Code Not Matched 8G-18
DTC 31 Transponder Code Not Registered 8G-18
DTC 12 Fault in Immobilizer Control Module 8G-18

DTC 13 No Transponder Code Transmitted or Coil Antenna Opened/Shorted 8G-19
DTC21 ECM/Immobilizer Control Module Code Not Matched (Immobilizer Control Module Side) 8G-22
DTC81 (P1623) ECM/Immobilizer Control Module Code Not Matched (ECM Side) . 8G-22
DTC84 (P1620) ECM/Immobilizer Control Module Code Not Registered 8G-22
DTC 82 (P1622) Fault in ECM 8G-22
DTC22 Ignition Switch Circuit Open/Short 8G-23
DTC23 No ECM/Immobilizer Control Module Code Transmitted from ECM or DLC Circuit Opened/Shorted 8G-24
DTC83 (P1621) No ECM/Immobilizer Control Module Code Transmitted from Immobilizer Control Module or DLC Circuit Opened/Shorted 8G-24
Inspection of ECM, Immobilizer Control Module and its Circuit 8G-26

ON-VEHICLE SERVICE 8G-28
Precautions in Handling Immobilizer Control System 8G-28
Immobilizer Control Module 8G-29
Coil Antenna (Vehicle not Equipped with Air Bag System) 8G-29

HOW TO REGISTER IGNITION KEY 8G-30

PROCEDURE AFTER IMMOBILIZER CONTROL MODULE REPLACEMENT 8G-32

PROCEDURE AFTER ECM REPLACEMENT 8G-33

SPECIAL TOOLS 8G-34

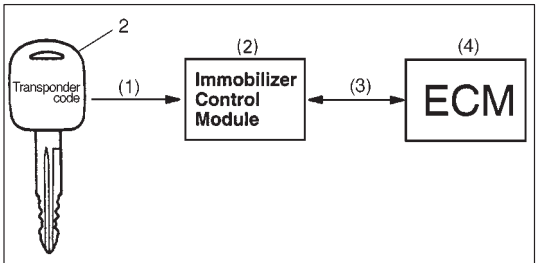

<Vehicle not equipped with air bag system>

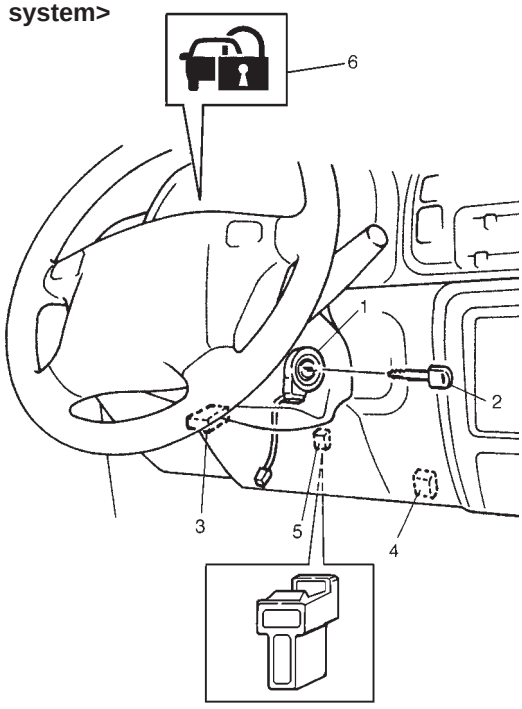

1. Coil antenna
2. Ignition key (Knob color: Black)
3. Immobilizer control module
4 Data link connector (DLC)
5. Immobilizer diagnostic coupler
6. Immobilizer indicator lamp (if equipped)

<Vehicle equipped with air bag system>

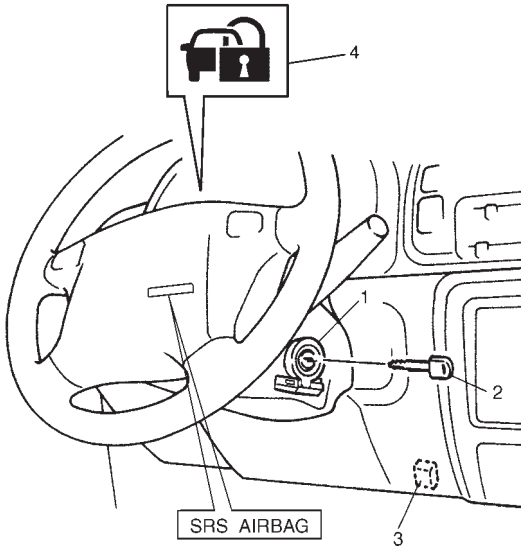

1. Immobilizer control module
2. Ignition key (Knob color: Dark gray)
3 Data link connector (DLC)
4. Immobilizer indicator lamp (if equipped)

GENERAL DESCRIPTION

The immobilizer control system designed to prevent vehicle burglar consists of following components.

<Vehicle not equipped with air bag system>
- Engine control module (ECM)
- Immobilizer control module
- Ignition key with built-in transponder (Knob color: Black)
- Coil antenna

<Vehicle equipped with air bag system>
- Engine control module (ECM)
- Immobilizer control module with coil antenna
- Ignition key with built-in transponder (Knob color: Dark gray)

Operation of this system is as follows.

(1) Each ignition key has its own code (Transponder code) stored in memory. When the ignition switch is turned ON, Immobilizer Control Module tries to read the Transponder code through the coil antenna installed to the steering lock assembly.

(2) Immobilizer Control Module compares the Transponder code read in (1) and that registered in Immobilizer Control Module and checks if they match.

(3) When it is confirmed that two Transponder codes match each other as described above, Immobilizer Control Module and ECM check if ECM/Immobilizer Control Module codes registered in them respectively match.

(4) Only when it is confirmed that ECM/Immobilizer Control Module codes match, the engine starts running. If Transponder codes in Step (2) or ECM/Immobilizer Control Module codes in Step (3) do not match, ECM will stop operation of the injector and ignition of spark plug.

Vehicle equipped with air bag system

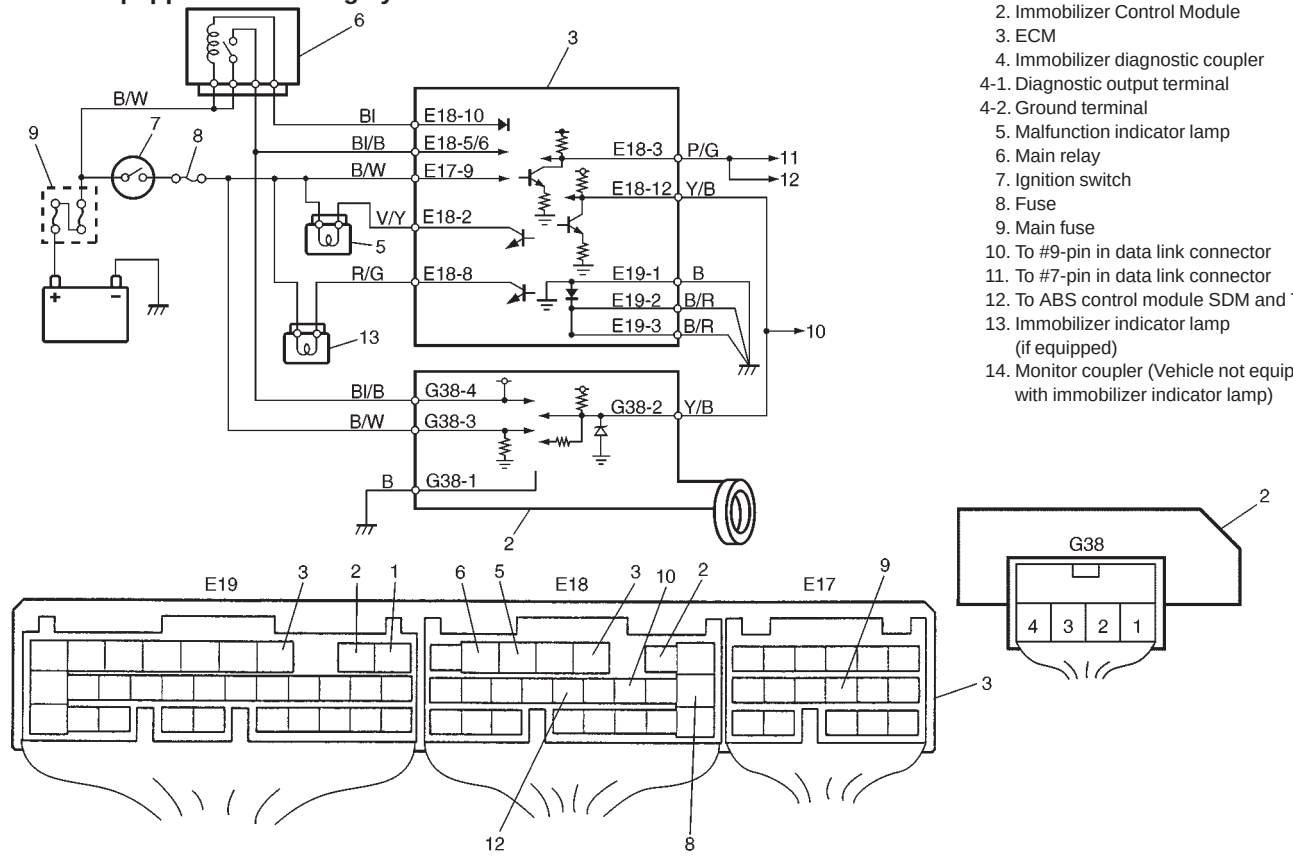

1. Coil antenna
2. Immobilizer Control Module
3. ECM
4. Immobilizer diagnostic coupler
4-1. Diagnostic output terminal
4-2. Ground terminal
5. Malfunction indicator lamp
6. Main relay
7. Ignition switch
8. Fuse
9. Main fuse
10. To #9-pin in data link connector
11. To #7-pin in data link connector
12. To ABS control module SDM and TCM
13. Immobilizer indicator lamp (if equipped)
14. Monitor coupler (Vehicle not equipped with immobilizer indicator lamp)

Vehicle not equipped with air bag system

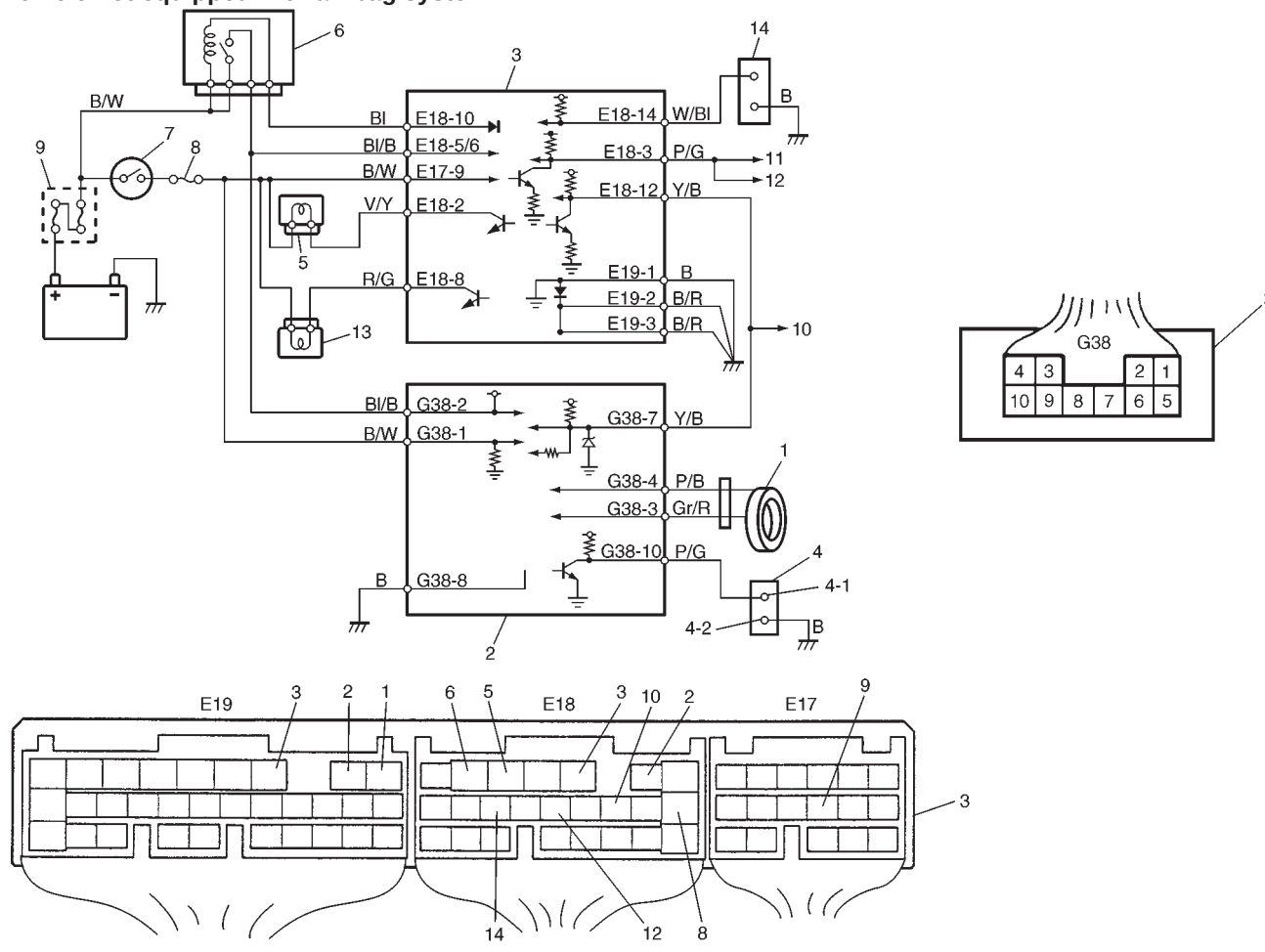

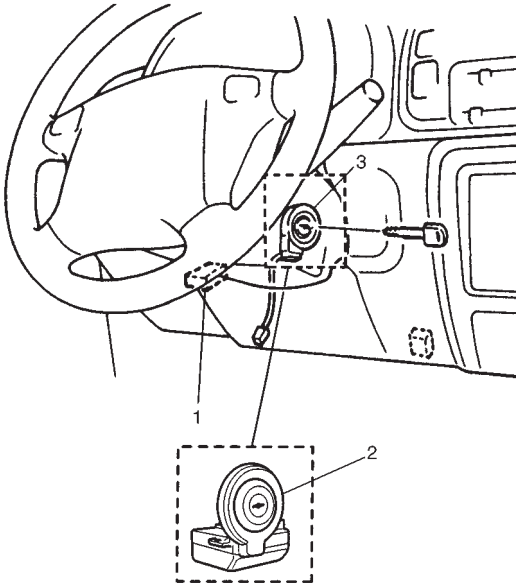

1. Immobilizer Control Module
   (Vehicle not equipped with air bag system)
2. Immobilizer Control Module
   (Vehicle equipped with air bag system)
3. Coil antenna (Vehicle not equipped with air bag system)

IMMOBILIZER CONTROL MODULE

Immobilizer Control Module is installed to the steering lock assembly or the underside of the instrument panel at the driver's seat side.

As main functions, Immobilizer Control Module checks matching not only between the Transponder Code transmitted from the ignition key and that registered in Immobilizer Control Module (Up to 4 different Transponder codes can be registered.) but also between the ECM/Immobilizer Control Module code transmitted from ECM and that registered in Immobilizer Control Module. In addition, it has an on-board diagnostic system (self-diagnosis function) which is described in "On-Board Diagnostic System (Self-Diagnosis Function)" in this section.

ECM

As main functions, ECM not only checks matching of ECM/Immobilizer Control Module code but also has an on-board diagnostic system (self-diagnosis function) as described in "On-Board Diagnostic System (Self-Diagnosis Function)" in this section.

For installation position of ECM, refer to Section 6E.

ON-BOARD DIAGNOSTIC SYSTEM (SELF-DIAGNOSIS FUNCTION)

Immobilizer Control Module and ECM diagnose troubles which may occur in the area including the following parts when the ignition switch is ON.

ECM:
- ECM/Immobilizer Control Module code
- Serial data link circuit
- ECM

Immobilizer Control Module:
- Transponder code
- Coil antenna
- ECM/Immobilizer Control Module code
- Serial data link circuit
- Immobilizer Control Module
- Ignition signal

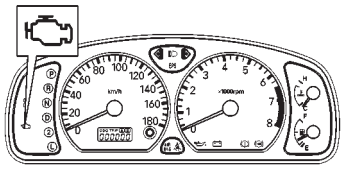

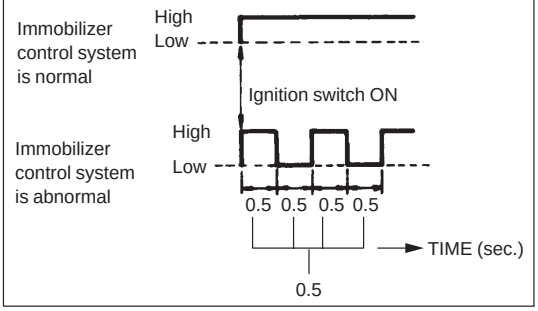

<Vehicle not equipped with immobilizer indicator lamp>
With the diagnosis switch terminal of monitor coupler for ECM not grounded, the ignition switch turned ON (but the engine at stop) and regardless of the condition of the electronic fuel injection system, ECM indicates whether a trouble has occurred in the immobilizer control system or not by causing the malfunction indicator lamp to flash or turn ON.

Malfunction indicator lamp is ON:
No trouble exists in the immobilizer control system.
Malfunction indicator lamp is flashing:
ECM or Immobilizer Control Module has detected some trouble in the immobilizer control system.

NOTE:
As soon as the ignition switch is turned ON, ECM and Immobilizer Control Module diagnose if a trouble has occurred in the immobilizer control system. While the diagnosis is being made, the malfunction indicator lamp stays ON and if the diagnosis result is "abnormal", it immediately changes to flashing but if the result if "normal", it remains ON. Diagnosis takes about 3 seconds at maximum.

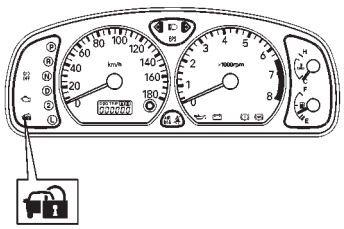

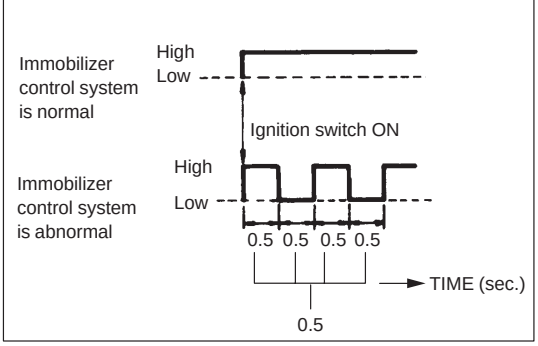

<Vehicle equipped with immobilizer indicator lamp>
With the ignition switch turned ON (but the engine at stop) regardless of the condition of the engine and emission control system, ECM indicates whether a trouble has occurred in the immobilizer control system or not by causing the immobilizer indicator lamp to flash or turn ON.

Immobilizer indicator lamp is ON:
No trouble exists in the immobilizer control system.
Immobilizer indicator lamp is flashing:
ECM or Immobilizer Control Module has detected some trouble in the immobilizer control system.

NOTE:
As soon as the ignition switch is turned ON, ECM and Immobilizer Control Module diagnose if a trouble has occurred in the immobilizer control system. While the diagnosis is being made, the immobilizer indicator lamp stays ON and if the diagnosis result is "abnormal", it immediately changes to flashing but if the result if "normal", it remains ON. Diagnosis takes about 3 seconds at maximum.

When ECM and Immobilizer Control Module detects a trouble which has occurred in the above areas, it stores DTC corresponding to the exact trouble area in ECM and Immobilizer Control Module memory.

DTCs stored in memory of each controller (Immobilizer Control Module and ECM) can be read by using the procedure described in "DIAGNOSTIC TROUBLE CODE CHECK (IMMOBILIZER CONTROL MODULE)" and "DIAGNOSTIC TROUBLE CODE CHECK(ECM)" in this section.

DIAGNOSIS

PRECAUTIONS IN DIAGNOSING TROUBLES

PRECAUTIONS IN IDENTIFYING DIAGNOSTIC TROUBLE CODE

ECM

<Vehicle not equipped with immobilizer indicator lamp>

- Before identifying diagnostic trouble code indicated by malfunction indicator lamp or Suzuki scan tool, don't disconnect couplers from ECM, battery cable from battery, ECM ground wire harness from engine.
  Such disconnection will clear trouble codes for engine and emission control system and immobilizer control system stored in memory of ECM.
- If abnormality or malfunction lies in two or more areas, malfunction indicator lamp indicates applicable codes three times each.
  And flashing of these codes is repeated as long as diagnosis terminal is grounded and ignition switch is held at ON position.
- When ECM detects a trouble in both engine and emission control system and immobilizer control system, malfunction indicator lamp indicates trouble codes of both systems alternately while the ignition switch is turned ON and the diagnosis terminal is grounded.
- Take a note of diagnostic trouble code indicated first.

<Vehicle equipped with immobilizer indicator lamp>

- Before identifying diagnostic trouble code indicated through Suzuki scan tool, don't disconnect couplers from ECM, battery cable from battery, ECM ground wire harness from engine.
  Such disconnection will clear trouble codes for engine and emission control system and immobilizer control system stored in memory of ECM.
- Take a note of diagnostic trouble code indicated first.

Immobilizer Control Module

- Take a note of diagnostic trouble code indicated first.

INTERMITTENT TROUBLES

- There are cases where output of diagnostic output terminal, malfunction indicator lamp and/or Suzuki scan tool indicate a diagnostic trouble code representing a trouble which occurred only temporarily and has gone. In such case, it may occur that good parts are replaced unnecessarily. To prevent such accident, be sure to follow instructions given below when checking by using "Diagnostic Flow Table".
  * When trouble can be identified, it is not an intermittent one:
    Check coil antenna, ignition key, wires and each connection and if they are all in good condition, substitute a known-good ECM and recheck.
  * When trouble can not be identified but output of diagnostic output terminal, malfunction indicator lamp and/or Suzuki scan tool indicate a trouble code:
    Diagnose trouble by using that code No. and if ignition key, coil antenna, wires and each connection are all in good condition, turn OFF ignition switch and then ON.

Then check what malfunction indicator lamp, output of diagnostic output terminal and/or Suzuki scan tool indicate. Only when they indicate trouble code again, substitute a known-good ECM or Immobilizer Control Module and check again.

If they indicate not trouble code but normal code, it means that an intermittent trouble did occur and has gone. In this case, check wires and connections carefully again.

DIAGNOSTIC FLOW TABLE

<Vehicle not equipped with immobilizer indicator lamp>

STEP	ACTION	YES	NO
1	1) Make sure that diagnosis switch terminal in monitor coupler is not grounded by service wire. See Fig. 1. 2) Check malfunction indicator lamp while ignition switch is ON (but without starting engine). See Fig. 2. Does malfunction indicator lamp flash?	Go to Step 3.	● If malfunction indicator lamp remains ON, go to Step 2. ● If malfunction indicator lamp remains OFF, go to "MALFUNCTION INDICATOR LAMP CHECK" in Section 6.
2	1) Using service wire, ground diagnosis switch terminal in monitor coupler. See Fig. 3. Does malfunction indicator lamp flash?	Immobilizer control system is in good condition.	Go to "MALFUNCTION INDICATOR LAMP CHECK" in Section 6.
3	Does malfunction indicator lamp flash as Fig. 4?	Go to Step 4.	Go to "MALFUNCTION INDICATOR LAMP CHECK" in Section 6.
4	1) Check DTC stored in immobilizer control module referring to "DIAGNOSTIC TROUBLE CODE CHECK (IMMOBILIZER CONTROL MODULE)" in this section. Is there any DTC(s)?	Go to flow table for DTC No.	Go to Step 5.
5	1) Check DTC stored in ECM referring to "DIAGNOSTIC TROUBLE CODE CHECK (ECM)" in this section. Is there any DTC(s)?	Go to flow table for DTC No.	Substitute a known-good ECM and recheck. **NOTE:** **After replacing with a known-good ECM, register ECM/Immobilizer Control Module code in ECM by performing procedure described in "Procedure after ECM Replacement" section.**

Fig. 1 for Step 1

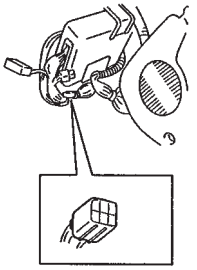

Fig. 2 for Step 1

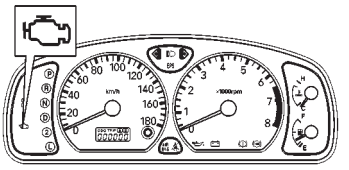

Fig. 3 for Step 2 and Step 5

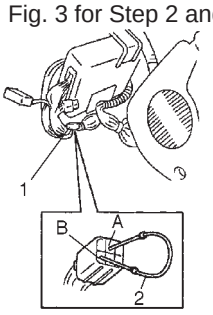

1. Monitor coupler
2 Service wire
A: Diagnosis switch terminal
B: Ground terminal

Fig. 4 for Step 3

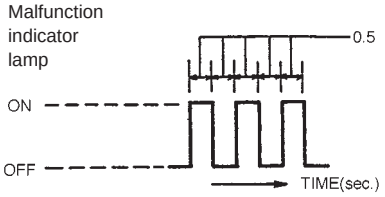

DIAGNOSTIC FLOW TABLE

<Vehicle equipped with immobilizer indicator lamp>

STEP	ACTION	YES	NO
1	1) Check immobilizer indicator lamp while ignition switch is ON (but without starting engine). See Fig. 1. Does immobilizer indicator lamp flash?	Go to Step 3.	● If immobilizer indicator lamp remains ON, go to Step 2. ● If immobilizer indicator lamp remains OFF, go to "IMMOBILIZER INDICATOR LAMP CHECK" in this section.
2	1) Check DTC stored in ECM referring to "DIAGNOSTIC TROUBLE CODE CHECK (ECM)" in this section. Is there any DTC(s)?	Go to "IMMOBILIZER INDICATOR LAMP CHECK" in this section.	Immobilizer control system is in good condition.
3	1) Check DTC stored in immobilizer control module referring to "DIAGNOSTIC TROUBLE CODE CHECK (IMMOBILIZER CONTROL MODULE)" in this section. Is there any DTC(s)?	Go to flow table for DTC No.	Go to Step 4.
4	1) Check DTC stored in ECM referring to "DIAGNOSTIC TROUBLE CODE CHECK (ECM)" in this section. Is there any DTC(s) for immobilizer control system?	Go to flow table for DTC No.	Substitute a known-good ECM and recheck. **NOTE:** **After replacing with a known-good ECM, register ECM/Immobilizer Control Module code in ECM by performing procedure described in "Procedure after ECM Replacement" section.**

Fig. 1 for Step 1

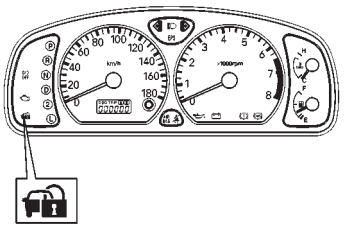

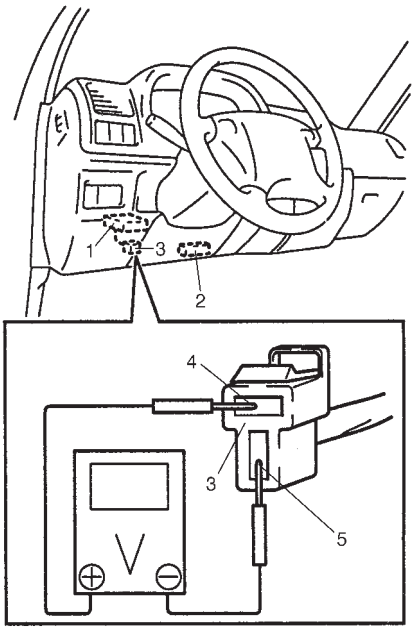

1. Immobilizer control module
2. DLC (Data link connector)
3. Immobilizer diagnostic coupler
4. Diagnostic output terminal
5. Ground terminal

DIAGNOSTIC TROUBLE CODE (DTC) CHECK (IMMOBILIZER CONTROL MODULE)

[Vehicle not equipped with air bag system]

1) Using analog type voltmeter, connect positive probe to diagnostic output terminal and negative probe to ground of immobilizer diagnostic coupler with ignition switch turned ON.
2) Read deflection of voltmeter indicator which represents DTC as shown in example below and write it down. For details of DTC, refer to Immobilizer Control Module side in “Diagnostic Trouble Code Table”.
   If voltmeter indicator does not deflect, go to “Diagnostic Flow Table A”.

NOTE:
If abnormality or malfunction lies in two or more areas, voltmeter indicator lamp indicates applicable codes three times each.

EXAMPLE: ● COIL ANTENNA FAILURE (CODE NO. 13)

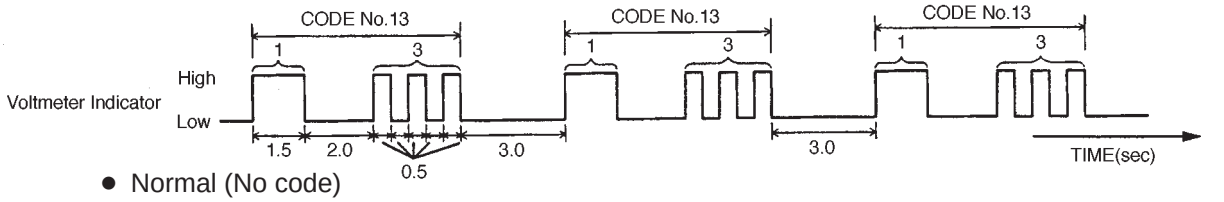

● Normal (No code)

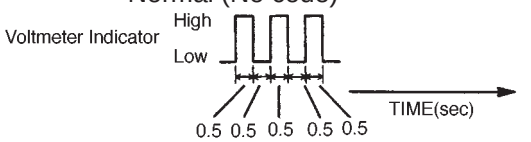

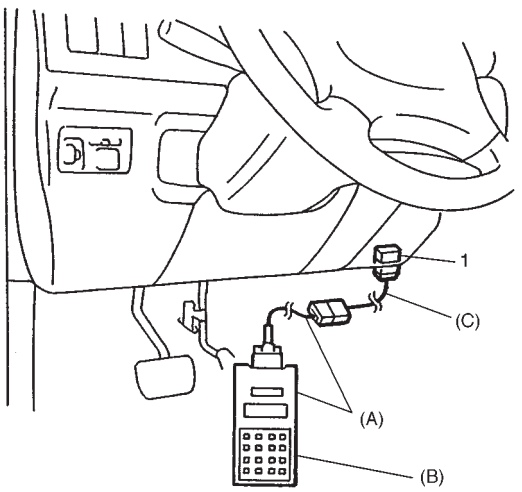

1. Data link connector (DLC)

[Vehicle equipped with air bag system]

1) Turn ignition switch OFF.
2) After setting cartridge to Suzuki scan tool, connect it to data link connector (DLC) located on underside of instrument panel at driver's seat side.

   Special Tool
   (A): 09931-76011 (Suzuki scan tool)
   (B): Mass storage cartridge
   (C): 09931-76030 (16/14 pin DLC cable)

3) Turn ignition switch ON.
4) Read DTC stored in immobilizer control module according to instructions displayed on Suzuki scan tool and print it or write it down. Refer to Suzuki scan tool operator's manual for further details.

   NOTE:
   When reading DTC stored in immobilizer control module using Suzuki scan tool, select "BCM" from the applications menu and "IMMOBILIZER" from the select system menu displayed on Suzuki scan tool.

   If communication between Suzuki scan tool and immobilizer control module is not possible, go to "Diagnostic Flow Table D".
5) After completing the check, turn ignition switch OFF and disconnect Suzuki scan tool from data link connector (DLC).

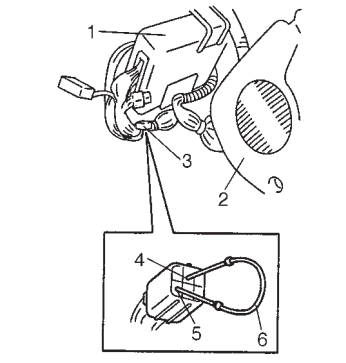

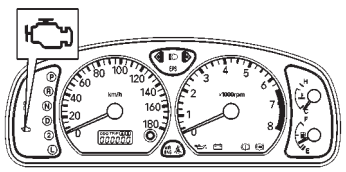

1. ECM
2. Dash side trim
3. Monitor coupler
4. To diagnostic switch
5. To ground terminal
6. Service wire

DIAGNOSTIC TROUBLE CODE (DTC) CHECK (ECM)

[Not using SUZUKI scan tool] (Except for vehicle equipped with immobilizer indicator lamp)

1) Using service wire, ground diagnostic switch terminal in monitor coupler.
2) Read DTC from flashing pattern of malfunction indicator lamp as shown in example below and write it down. For details of DTC, refer to ECM side in "Diagnostic Trouble Code Table".
   If lamp remains ON, go to "Malfunction Indicator Lamp Check" in Section 6.

   NOTE:
   If abnormality or malfunction lies in two or more areas, malfunction indicator lamp indicates applicable codes three times each.
   And flashing of these codes is repeated as long as diagnosis terminal is grounded and ignition switch is held at ON position.

EXAMPLE: When serial data link wire is defective (Code No.83)

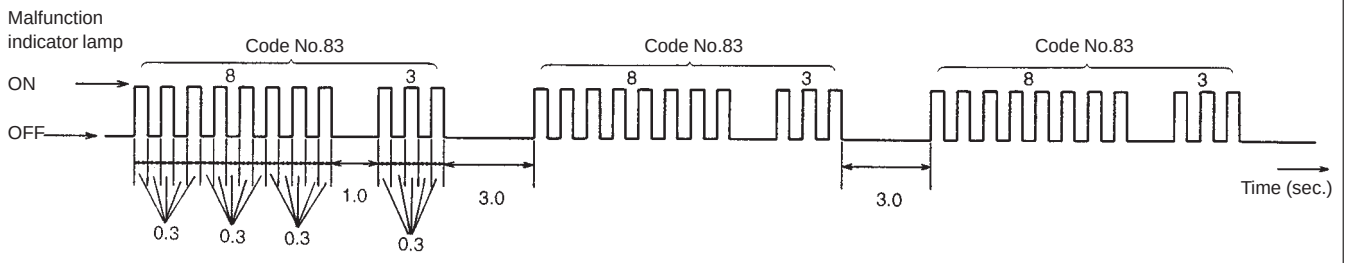

3) After completing the check, turn ignition switch OFF and disconnect service wire from monitor coupler.

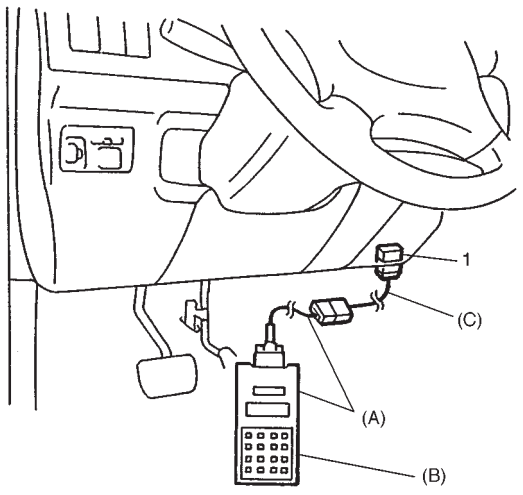

1. Data link connector (DLC)

[Using SUZUKI scan tool]

1) Turn ignition switch OFF.
2) After setting cartridge to Suzuki scan tool, connect it to data link connector (DLC) located on underside of instrument panel at driver's seat side.

   Special Tool
   (A): 09931-76011 (Suzuki scan tool)
   (B): Mass storage cartridge
   (C): 09931-76030 (16/14 pin DLC cable)

3) Turn ignition switch ON.
4) Read DTC stored in ECM according to instructions displayed on Suzuki scan tool and print it or write it down. Refer to Suzuki scan tool operator's manual for further details.

   NOTE:
   - **When reading DTC stored in ECM using Suzuki scan tool, select "ECM" from the applications menu and "SUZUKI mode" from the communication mode menu displayed on Suzuki scan tool.**
   - **If ECM detects a trouble in both engine and emission control system and immobilizer control system, Suzuki scan tool indicates trouble codes of both systems using Suzuki mode of ECM application.**

   If communication between Suzuki scan tool and ECM is not possible, check if Suzuki scan tool is communicable by connecting it to ECM in another vehicle. If communication is possible in this case, Suzuki scan tool is in good condition. Then check data link connector and serial data line (circuit) in the vehicle with which communication was not possible.
5) After completing the check, turn ignition switch OFF and disconnect Suzuki scan tool from data link connector (DLC).

DIAGNOSTIC TROUBLE CODE TABLE

Immobilizer Control Module

DTC (indicated on Suzuki scan tool)	DTC (indicated by voltmeter indicator)	VOLTMETER INDICATION	DIAGNOSTIC AREA	DIAGNOSIS
NO DTC	—		Normal (No code)	This code appears when none of the other codes are identified.
11	11		Transponder code	Diagnose trouble according to “Diagnostic Flow Table” corresponding to each code No.
31	31			
*32	*32			
12	12		Immobilizer Control Module	
13	13		Coil antenna or ignition key with built-in transponder	
21	21		ECM/Immobilizer Control Module code	
22	22		Ignition switch circuit	
23	23	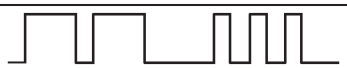	Serial data link circuit	

NOTE: The DTC with asterisk (*) in DTC column is for vehicle equipped with air bag system.

ECM

To learn how to read diagnostic trouble code (DTC) from flashing of malfunction indicator lamp, refer to Section 6E.

DTC (indicated on Suzuki scan tool)	DTC (indicated by MIL)	Malfunction Indicator lamp (MIL) flashing pattern	DIAGNOSTIC AREA	DIAGNOSIS
NO DTC	12		Normal	This code appears when it is confirmed that none of other trouble codes is set for immobilizer control system or engine and emission control system.
P1623	81		ECM/Immobilizer Control Module code	Diagnose trouble according to “DIAGNOSTIC FLOW TABLE” corresponding to each code No.
P1620	84			
P1622	82		ECM	
P1621	83		Serial data link wire	

TABLE A DTC IS NOT OUTPUT FROM DIAGNOSTIC OUTPUT TERMINAL (FOR VEHICLE NOT EQUIPPED WITH AIR BAG SYSTEM)

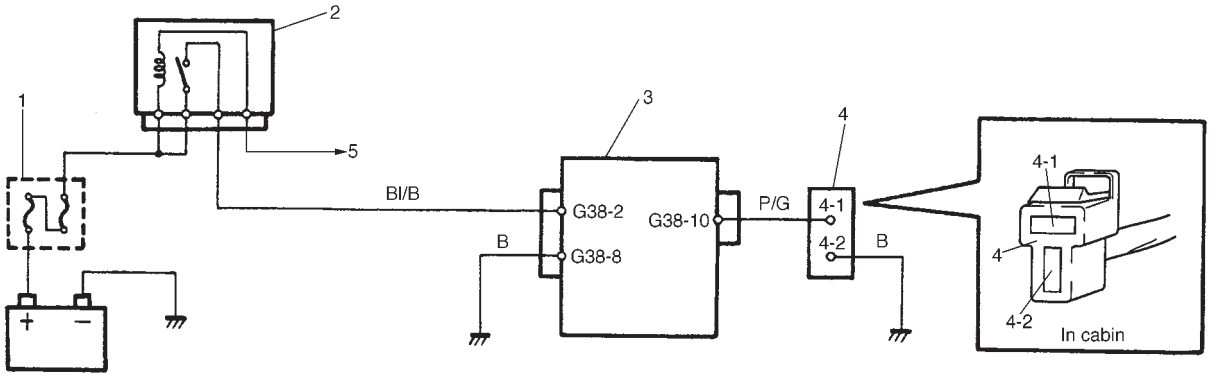

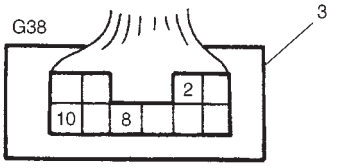

1. Main fuse
2. Main relay
3. Immobilizer Control Module
4. Immobilizer diagnostic coupler
   (Vehicle not equipped with immobilizer indicator lamp)

4-1. Ground terminal
4-2. Diagnostic output terminal
5. To ECM

STEP	ACTION	YES	NO
1	Check voltage between G38-2 terminal and body ground with ignition switch turned ON. Is it 10 – 14V?	Go to Step 2.	"Bl/B" wire open.
2	1) Connect voltmeter between G38-10 terminal and body ground. 2) Does voltmeter indicator deflect?	Go to Step 3.	● Poor G38-2, G38-10 or G38-8 connection. ● "B" wire of G38-8 terminal open. ● "P/G" wire between G38-10 terminal and diagnostic output terminal of immobilizer diagnostic coupler short. If wire and connections are OK, substitute a known-good Immobilizer Control Module and recheck. **NOTE:** **After replacing with a known-good Immobilizer Control Module, register ECM/Immobilizer Control Module code in ECM and Transponder code and ECM/Immobilizer Control Module code in Immobilizer Control Module by performing procedure described in "Procedure After Immobilizer Control Module Replacement".**
3	1) Connect voltmeter between diagnostic output terminal of immobilizer diagnostic coupler and body ground. 2) Is it possible to read DTC by checking deflection of voltmeter indicator?	"B" wire of ground terminal for immobilizer diagnostic coupler open.	"P/G" wire between G38-10 terminal and diagnostic output terminal of immobilizer diagnostic coupler open.

TABLE B IMMOBILIZER INDICATOR LAMP CHECK FOR VEHICLE EQUIPPED WITH IMMOBILIZER INDICATOR LAMP (IMMOBILIZER INDICATOR LAMP DOES NOT LIGHT AT IGNITION SWITCH ON)

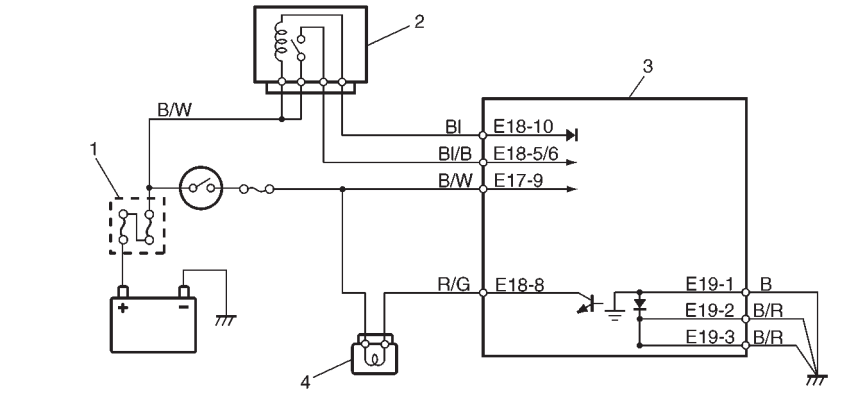

1. Main fuse
2. Main relay
3. ECM
4. Immobilizer indicator lamp

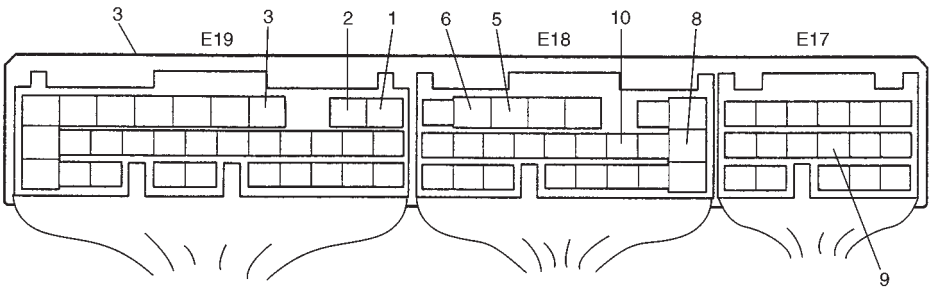

STEP	ACTION	YES	NO
1	1) Turn ignition switch ON. Do other indicator/warning lights in combination meter come ON?	Go to Step 2.	"IG" fuse blown, main fuse blown, ignition switch malfunction, "B/W" circuit between "IG" fuse and combination meter or poor coupler connection at combination meter.
2	1) Turn ignition switch OFF and disconnect connectors from ECM. 2) Check for proper connection to ECM at terminal E18-8. 3) If OK, then using service wire, ground terminal E18-8 in connector disconnected. Does immobilizer indicator lamp turn on at ignition switch ON?	Substitute a known-good ECM and recheck.	Bulb burned out or "BI" wire circuit open.

TABLE C IMMOBILIZER INDICATOR LAMP CHECK FOR VEHICLE EQUIPPED WITH IMMOBILIZER INDICATOR LAMP (IMMOBILIZER INDICATOR LAMP REMAINS ON AFTER ENGINE STARTS)

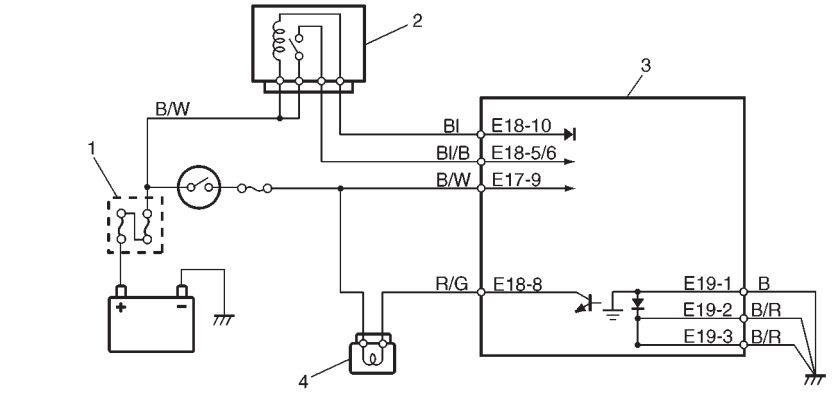

1. Main fuse
2. Main relay
3. ECM
4. Immobilizer indicator lamp

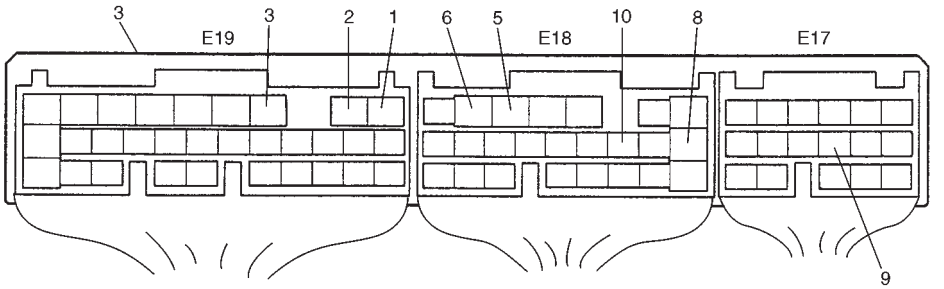

STEP	ACTION	YES	NO
1	1) With ignition switch OFF, disconnect couplers from ECM. Does immobilizer indicator lamp turn ON at ignition switch ON?	"R/G" wire shorted to ground circuit.	Substitute a known-good ECM and recheck.

TABLE D DTC IS NOT OUTPUT FROM IMMOBILIZER CONTROL MODULE (FOR VEHICLE EQUIPPED WITH AIR BAG SYSTEM)

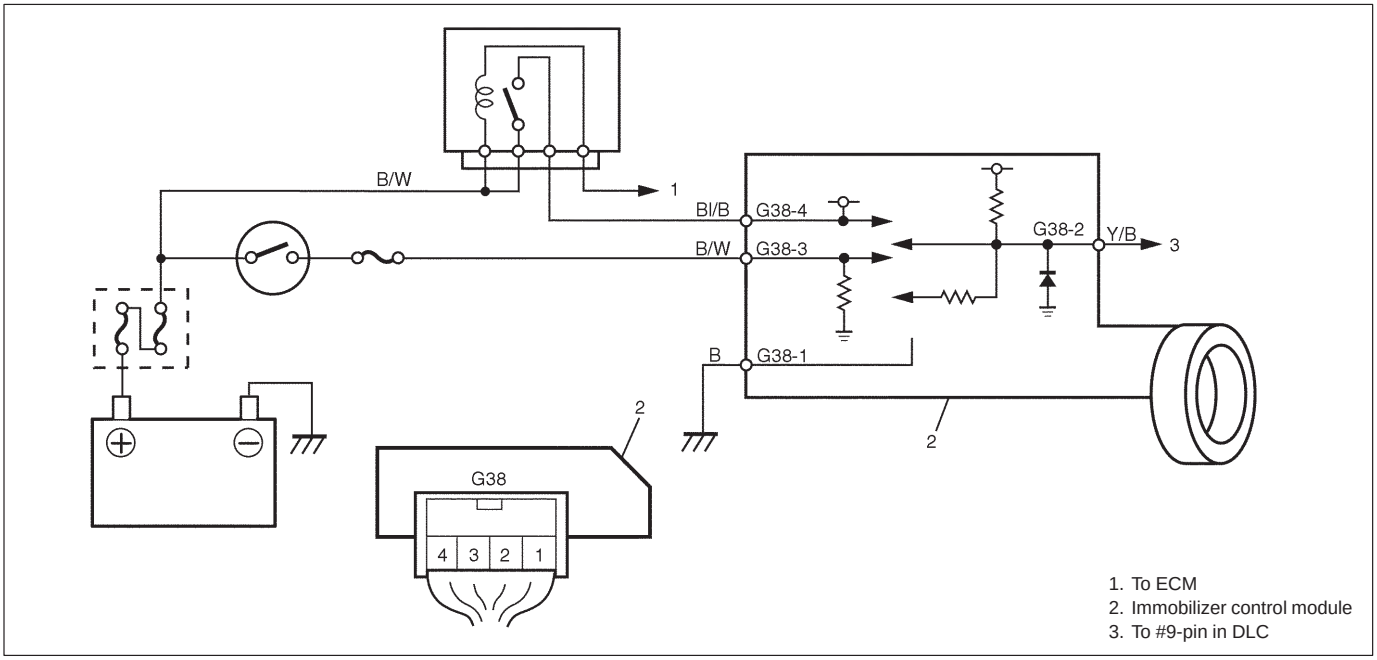

1. To ECM
2. Immobilizer control module
3. To #9-pin in DLC

STEP	ACTION	YES	NO
1	Check voltage between G38-4 terminal and body ground with ignition switch turned ON. See Fig 1. Is it 10 – 14 V?	Go to Step 2.	"Bl/B" wire open or short to ground.
2	1) Disconnect coupler at immobilizer control module. 2) Is there continuity between coupler terminal G38-1 and body ground? See Fig 2.	● Poor "G38-4" or "G38-1" connection ● Poor #9-pin connection in DLC ● Serial data line "Y/B" open or short to ground If connections and line are OK, substitute a known-good Immobilizer Control Module and recheck. **NOTE:** **After replacing with a known-good Immobilizer Control Module, register ECM/Immobilizer Control Module code in ECM and Transponder code and ECM/Immobilizer Control Module code in Immobilizer Control Module by performing procedure described in "Procedure After Immobilizer control Module Replacement".**	"B" wire open.

Fig. 1

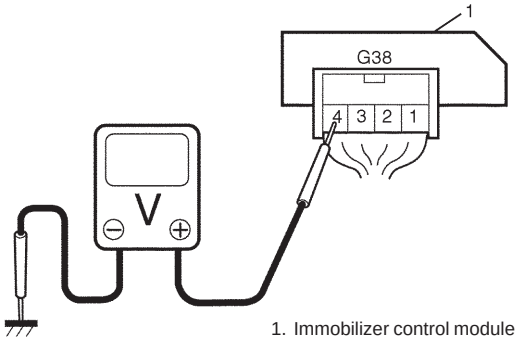

1. Immobilizer control module

Fig. 2

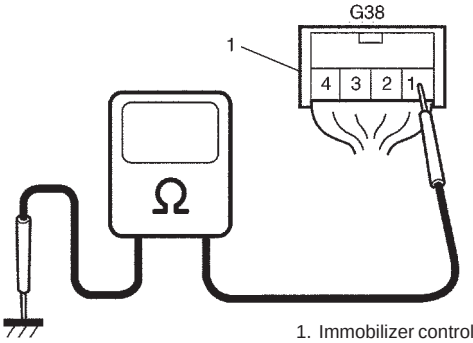

1. Immobilizer control module coupler

DTC11/32 TRANSPONDER CODE NOT MATCHED

DESCRIPTION:

Immobilizer Control Module checks if Transponder code transmitted from ignition key and that registered in Immobilizer Control Module match when ignition switch is ON. If they do not, DTC 11 and/or 32 are set.

INSPECTION:

Register ignition key with built-in transponder by using SUZUKI scan tool and performing following steps.

1) Register Transponder code in Immobilizer Control Module by performing procedure described in "How To Register Ignition Key".
2) Turn ignition switch OFF, then turn it ON and check that DTC11 and/or 32 are not set.

DTC31 TRANSPONDER CODE NOT REGISTERED

DESCRIPTION:

Immobilizer Control Module checks if Transponder code transmitted from ignition key and that registered in Immobilizer Control Module match when ignition switch is ON. If there is no Transponder code registered in Immobilizer Control Module, this DTC is set.

INSPECTION:

Register ignition key with built-in transponder by using SUZUKI scan tool and performing following steps.

1) Register Transponder code in Immobilizer Control Module by performing procedure described in "How To Register Ignition Key".
2) Turn ignition switch OFF, then turn it ON and check that DTC31 is not set.

DTC12 FAULT IN IMMOBILIZER CONTROL MODULE

DESCRIPTION:

This DTC is set when an internal fault is detected in Immobilizer Control Module.

INSPECTION:

STEP	ACTION	YES	NO
1	1) Ignition switch "OFF". 2) Disconnect connectors from Immobilizer Control Module. 3) Check for proper connection to Immobilizer Control Module at all terminals. Are they in good condition?	Substitute a known-good Immobilizer Control Module and recheck. **NOTE:** **After replacing with a known-good Immobilizer Control Module, register ECM/Immobilizer Control Module code in ECM and Transponder code and ECM/Immobilizer Control Module code in Immobilizer Control Module by performing procedure described in "Procedure After Immobilizer Control Module Replacement".**	Repair or replace.

DTC13 NO TRANSPONDER CODE TRANSMITTED OR COIL ANTENNA OPENED/SHORTED (Page 1 of 3)

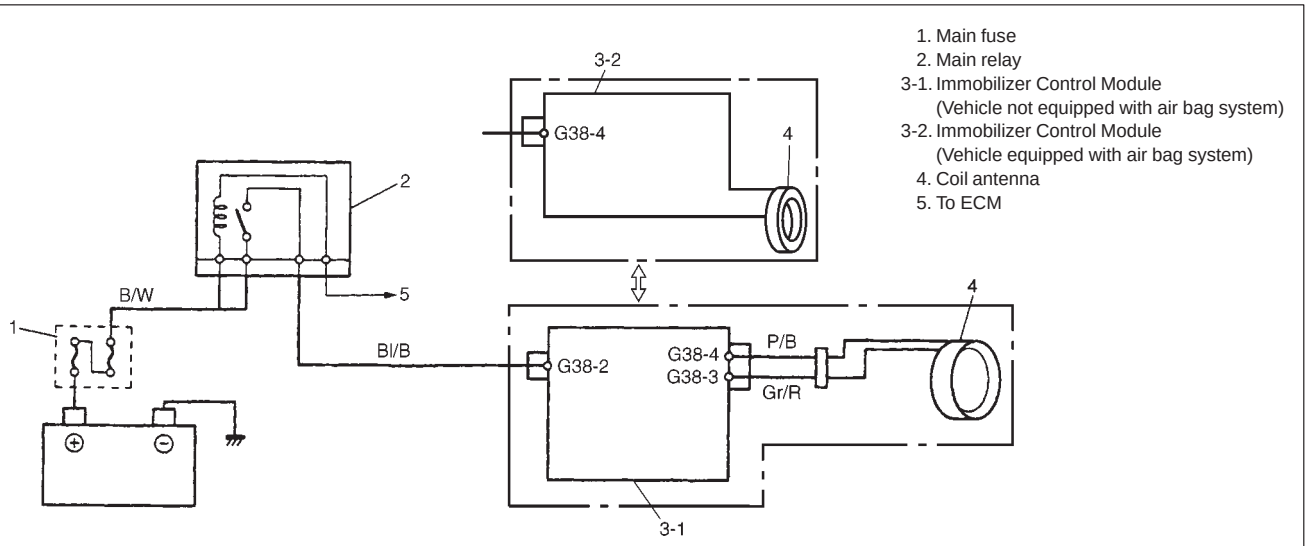

DESCRIPTION:

Immobilizer Control Module energizes the coil antenna when the ignition switch is ON and reads Transponder code from the ignition key. When Immobilizer Control Module cannot read Transponder code from the ignition key even when the coil antenna is energized, this DTC is set.

INSPECTION:

(Vehicle not equipped with air bag system)

STEP	ACTION	YES	NO
1	Check that knob shape and color for ignition key are as shown below. ● Knob color: Black ● Knob shape: the same as shown in Fig.1. Is it the original one?	Go to Step 2.	Replace ignition key with original one and follow "Diagnostic Flow Table" again.
2	1) Disconnect coil antenna coupler with ignition switch turned OFF. 2) Is there continuity between coil antenna coupler terminals A and B? (See Fig. 2)	Go to Step 3.	Coil antenna open.
3	Measure resistance between terminals of coil antenna coupler and body ground. (See Fig. 3) Is it ∞ (infinity) Ω?	Go to Step 4.	Coil antenna shorted to ground.
4	1) With coil antenna coupler disconnected, disconnect Immobilizer Control Module coupler. 2) Measure resistance between coil antenna terminals of Immobilizer Control Module coupler. (See Fig. 4) Is it ∞ (infinity) Ω?	Go to Step 5.	"P/B" wire shorted to "Gr/R" wire.
5	Measure resistance between terminal G38-4 of Immobilizer Control Module coupler and body ground. (See Fig. 5) Is it ∞ (infinity) Ω?	Go to Step 6.	"P/B" wire shorted to ground.
6	Measure resistance between terminal G38-3 of Immobilizer Control Module coupler and body ground. (See Fig. 6) Is it ∞ (infinity) Ω?	Go to Step 7.	"Gr/R" wire shorted to ground.

DTC13 NO TRANSPONDER CODE TRANSMITTED OR COIL ANTENNA OPENED/SHORTED (Page 2 of 3)

STEP	ACTION	YES	NO
7	1) Connect coil antenna coupler. 2) Is there continuity between Immobilizer Control Module coupler terminals G38-4 and G38-3? (See Fig. 7)	Go to Step 8.	● "P/B" or "Gr/R" wire open ● Poor coil antenna-to-coupler
8	1) If connections are OK, connect Immobilizer Control Module coupler and substitute a known-good coil antenna. 2) Is DTC 13 also indicated with ignition switch turned ON?	Go to Step 9.	Faulty coil antenna.
9	Is DTC 13 still indicated even when another ignition key (with built-in transponder) for that vehicle used?	Substitute a known-good Immobilizer Control Module and recheck. **NOTE:** **After replacing with a known-good Immobilizer Control Module, register ECM/Immobilizer Control Module code in ECM and Transponder code and ECM/Immobilizer Control Module code in Immobilizer Control Module by performing procedure described in "Procedure After Immobilizer Control Module Replacement".**	Faulty transponder.

Fig. 1 for step 1

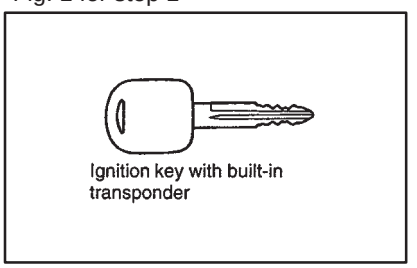

Fig. 2 for step 2

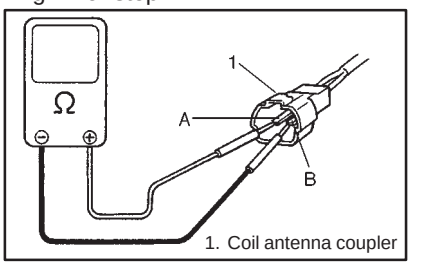

Fig. 3 for step 3

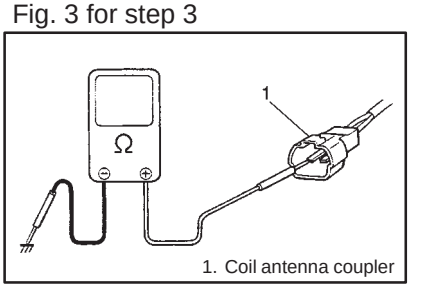

Fig. 4 for step 4

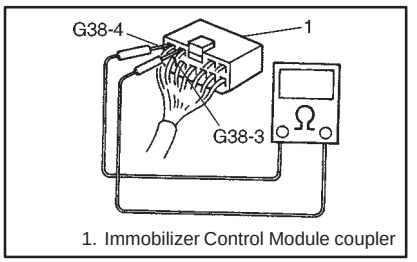

Fig. 5 for step 5

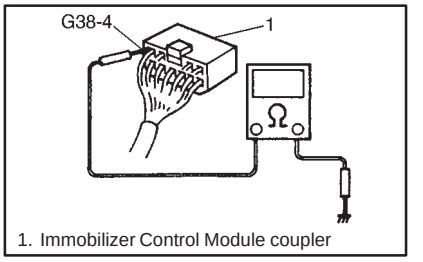

Fig. 6 for step 6

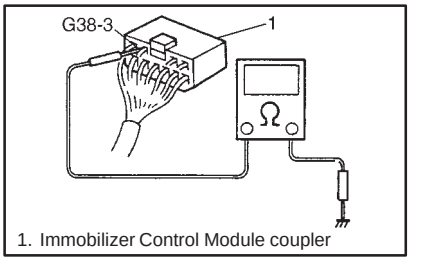

Fig. 7 for step 7

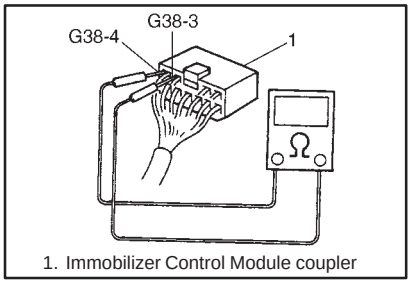

DTC13 NO TRANSPONDER CODE TRANSMITTED OR COIL ANTENNA OPENED/SHORTED (Page 3 of 3)

(Vehicle equipped with air bag system)

STEP	ACTION	YES	NO
1	Check that knob shape and color for ignition key are as shown below. ● Knob color: Dark gray ● Knob shape: the same as shown in Fig.1. Is it the original one?	Substitute a known-good Immobilizer Control Module and recheck. **NOTE:** **After replacing with a known-good Immobilizer Control Module, register ECM/Immobilizer Control Module code in ECM and Transponder code and ECM/Immobilizer Control Module code in Immobilizer Control Module by performing procedure described in "Procedure After Immobilizer Control Module Replacement".**	Replace ignition key with original one and follow "Diagnostic Flow Table" again.

Fig. 1 for step 1

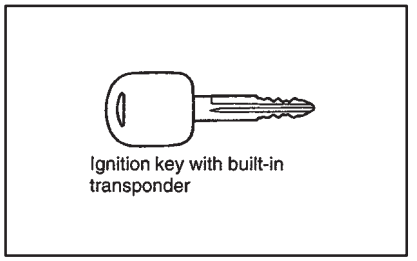

DTC21 ECM/IMMOBILIZER CONTROL MODULE CODE NOT MATCHED (IMMOBILiZER CONTROL MODULE SIDE)

DTC81 (P1623) ECM/IMMOBILIZER CONTROL MODULE CODE NOT MATCHED (ECM SIDE)

DTC84 (P1620) ECM/IMMOBILIZER CONTROL MODULE CODE NOT REGISTERED

DESCRIPTION:

- DTC21
  Immobilizer Control Module checks if ECM/Immobilizer Control Module code transmitted from ECM and that registered in Immobilizer Control Module match when ignition switch is ON. If they do not, this DTC is set.
- DTC81 (P1623)
  ECM checks if ECM/Immobilizer Control Module code transmitted from Immobilizer Control Module and that registered in ECM match when ignition switch is ON. If they do not, this DTC is set.
- DTC84 (P1620)
  ECM checks if code transmitted from Immobilizer Control Module and that registered in ECM match when ignition switch is ON. If there is no ECM/Immobilizer Control Module code registered in ECM, this DTC is set.

INSPECTION:

Perform procedure described in “Procedure After ECM Replacement”.

DTC82 (P1622) FAULT IN ECM

DESCRIPTION:

This DTC is set when an internal fault is detected in ECM.

INSPECTION:

STEP	ACTION	YES	NO
1	1) Ignition switch “OFF”. 2) Disconnect connectors from ECM. 3) Check for proper connection to ECM at all terminals. Are they in good condition?	Substitute a known-good ECM and re-check. **NOTE:** **After replacing with a known-good ECM, register ECM/Immobilizer Control Module code in ECM by performing procedure described in “Procedure After ECM Replacement”.**	Repair or replace.

DTC22 IGNITION SWITCH CIRCUIT OPEN/SHORT

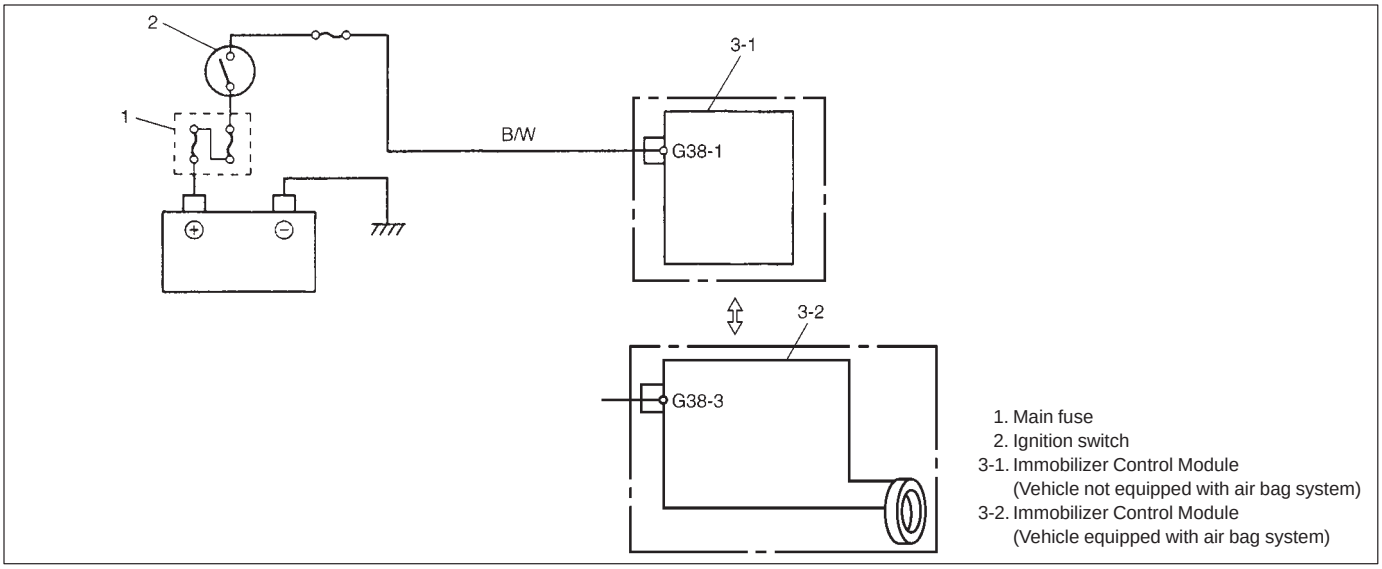

DESCRIPTION:

Immobilizer Control Module monitors ignition signal when the ignition switch is ON. This DTC is set when no ignition signal input is detected by Immobilizer Control Module.

INSPECTION:

STEP	ACTION	YES	NO
1	Check voltage between Immobilizer Control Module coupler terminal shown below and body ground with ignition switch turned ON. (See Fig.1) ● Terminal for vehicle without air bag system: "G38-1" ● Terminal for vehicle with air bag system: "G38-3" Is it 10 – 14V?	<Vehicle without air bag system> Poor G38-1 terminal connection <Vehicle with air bag system> Poor G38-3 terminal connection If connection is OK, substitute a known-good Immobilizer Control Module and recheck. **NOTE:** **After replacing with a know-good Immobilizer Control Module, register ECM/Immobilizer Control Module code in ECM and Transponder code and ECM/Immobilizer Control Module code in Immobilizer Control Module by performing procedure described in "Procedure After Immobilizer Control Module Replacement".**	"B/W" wire open or short.

Fig. 1 for step 1

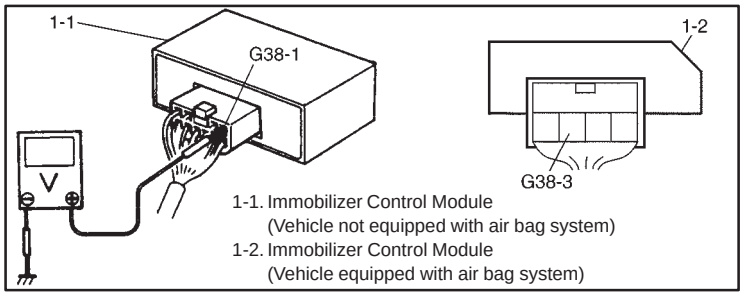

DTC23 NO ECM/IMMOBILIZER CONTROL MODULE CODE TRANSMITTED FROM ECM OR DLC CIRCUIT OPENED/SHORTED

DTC83 (P1621) NO ECM/IMMOBILIZER CONTROL MODULE CODE TRANSMITTED FROM IMMOBILIZER CONTROL MODULE OR DLC CIRCUIT OPENED/SHORTED

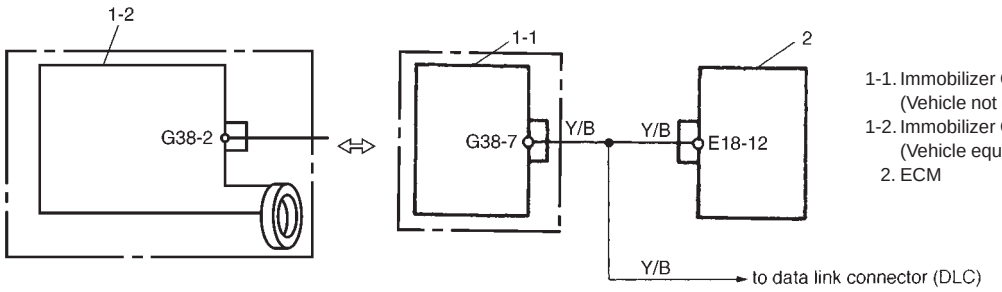

DESCRIPTION:

When the ignition switch is ON, Immobilizer Control Module requests ECM and ECM requests Immobilizer Control Module to transmit ECM/Immobilizer Control Module code. If ECM/Immobilizer Control Module code is not transmitted from ECM or Immobilizer Control Module, Immobilizer Control Module sets DTC23 and ECM sets DTC83.

INSPECTION:

STEP	ACTION	YES	NO
1	Check voltage between Immobilizer Control Module coupler terminal shown below and body ground with ignition switch turned ON. (See Fig. 1) ● Terminal for vehicle without air bag system: “G38-7” ● Terminal for vehicle with air bag system: “G38-2” Is it 4 – 5V?	Go to Step 2.	“Y/B” wire short.
2	1) Disconnect ECM coupler with ignition switch turned OFF. 2) Is there continuity between Immobilizer Control Module coupler terminal shown below and serial data link terminal (E18-12) of ECM coupler? (For positions of Data link connector terminal of ECM coupler, refer to “General Description” in this section.) ● Terminal for vehicle without air bag system: “G38-7” ● Terminal for vehicle with air bag system: “G38-2”	<Vehicle without air bag system> Poor G38-7 terminal connection or poor data link connector terminal connection (ECM) <Vehicle with air bag system> Poor G38-2 terminal connection or poor data link connector terminal connection (ECM) If connections are OK, substitute a known-good ECM or Immobilizer Control Module and recheck. **NOTE:** ● **After replacing with a known-good ECM, register ECM/Immobilizer Control Module code in ECM by performing procedure described in “Procedure After ECM Replacement”.** ● **After replacing with a known-good Immobilizer Control Module, register ECM/Immobilizer Control Module code in ECM and Transponder code and ECM/Immobilizer Control Module code in Immobilizer Control Module by performing procedure described in “Procedure After Immobilizer Control Module Replacement”.**	“Y/B” wire between Immobilizer Control Module and ECM open.

Fig. 1 for step 1

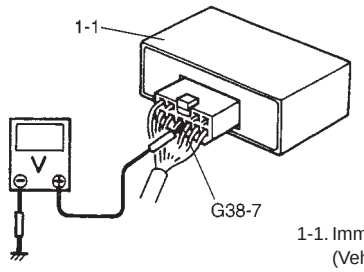

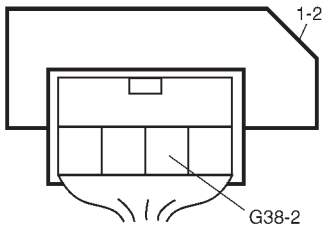

1-1. Immobilizer Control Module
(Vehicle not equipped with air bag system)
1-2. Immobilizer Control Module
(Vehicle equipped with air bag system)

Fig. 2 for step 2

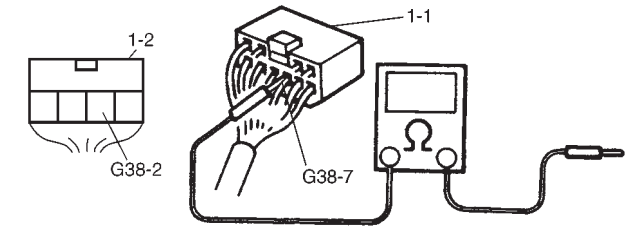

Connect to serial data link terminal (E18-12) of ECM coupler disconnected

1-1. Immobilizer Control Module coupler disconnected
(Vehicle not equipped with air bag system)
1-2. Immobilizer Control Module coupler disconnected
(Vehicle equipped with air bag system)

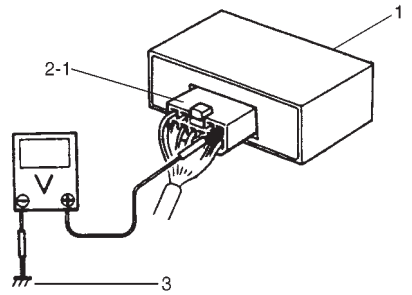

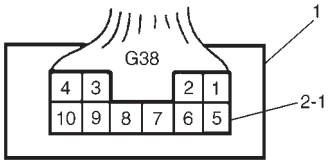

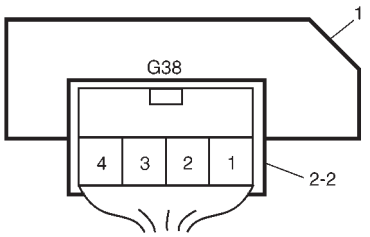

1. Immobilizer Control Module
2-1. Immobilizer Control Module coupler (Vehicle not equipped with air bag system)
2-2. Immobilizer Control Module coupler (Vehicle equipped with air bag system)
3. Body ground

INSPECTION OF ECM, IMMOBILIZER CONTROL MODULE AND ITS CIRCUIT

ECM, Immobilizer Control Module and its circuit can be checked at ECM wiring couplers and Immobilizer Control Module wiring coupler by measuring voltage. Described here is only inspection of Immobilizer Control Module. For inspection of ECM, refer to SECTION 6E.

CAUTION:
Immobilizer Control Module cannot be checked by itself. It is strictly prohibited to connect voltmeter or ohmmeter to Immobilizer Control Module with coupler disconnected from it.

Voltage Check

1) Remove Immobilizer Control Module, referring to "IMMOBILIZER CONTROL MODULE" for removal in this section.
2) Connect Immobilizer Control Module coupler to Immobilizer Control Module.
3) Check voltage at each terminal of coupler connected.

NOTE:
As each terminal voltage is affected by the battery voltage, confirm that it is 11V or more when ignition switch is ON.

<Vehicle not equipped with air bag system>

TERMINAL	CIRCUIT	NORMAL VOLTAGE	CONDITION
G38-1	Ignition signal	10 – 14V	Ignition switch ON
		0 – 0.8V	Ignition switch OFF
G38-2	Power source	10 – 14V	Ignition switch ON
G38-3	Coil antenna 2	0V	Ignition switch ON
G38-4	Coil antenna 1	0V	Ignition switch ON
G38-5 G38-6	Blank	—	—
G38-7	Data link connector (Serial data terminal)	4 – 5V	Ignition switch ON
G38-8	Ground	—	—
G38-9	Blank	—	—
G38-10	Diagnosis output	0 – 14V	Ignition switch ON
		0V	Ignition switch OFF

NOTE:
When measuring voltage at G38-4 and G38-3 terminals with ignition switch turned ON, be sure to turn ignition switch ON before connecting positive probe of voltmeter to G38-4 or G38-3 terminal. If it is not turned ON first, DTC13 (Diagnostic Trouble Code 13) may be indicated.

<Vehicle equipped with air bag system>

TERMINAL	CIRCUIT	NORMAL VOLTAGE	CONDITION
G38-1	Ground	—	—
G38-2	Data link connector (Serial data terminal)	4 – 5V	Ignition switch ON
G38-3	Ignition signal	10 – 14V	Ignition switch ON
		0 – 0.8V	Ignition switch OFF
G38-4	Power source	10 – 14V	Ignition switch ON

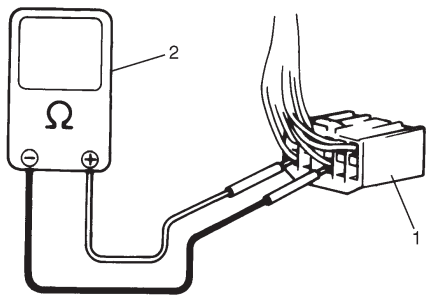

1. Immobilizer Control Module coupler disconnected
2. Ohmmeter

Resistance Check (Vehicle not equipped with air bag system)

1) Disconnect Immobilizer Control Module couplers from Immobilizer Control Module with ignition switch OFF.

CAUTION:
Never touch terminals of Immobilizer Control Module itself or connect voltmeter or ohmmeter.

2) Check resistance between each terminal of couplers disconnected.

CAUTION:
- **Be sure to connect ohmmeter probe from wire harness side of coupler.**
- **Be sure to turn OFF ignition switch for this check.**
- **Resistance in table below represents that when parts temperature is 20°C (68°F).**

TERMINAL	CIRCUIT	NORMAL RESISTANCE	CONDITION
G38-4 – G38-3	Coil antenna	Continuity	—

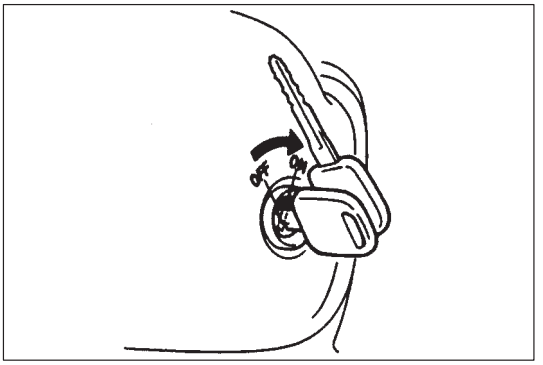

ON-VEHICLE SERVICE

PRECAUTIONS IN HANDLING IMMOBILIZER CONTROL SYSTEM

- Don't turn ON ignition switch with ignition key for immobilizer control system put together with another one or placed quite close to another one. Or the system may detect abnormal condition and prevent engine from starting.

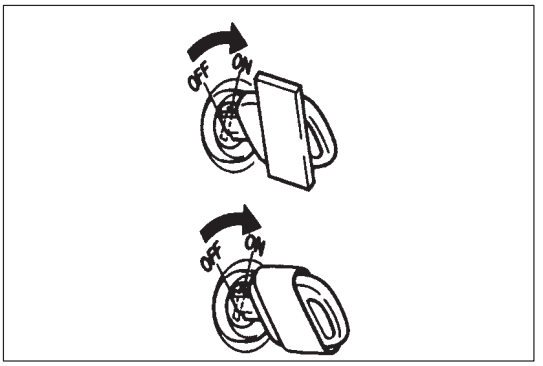

- Do not turn ON ignition switch by using ignition key with any type of metal wound around its grip or in contact with it. Or the system may detect abnormal condition and prevent engine from starting.

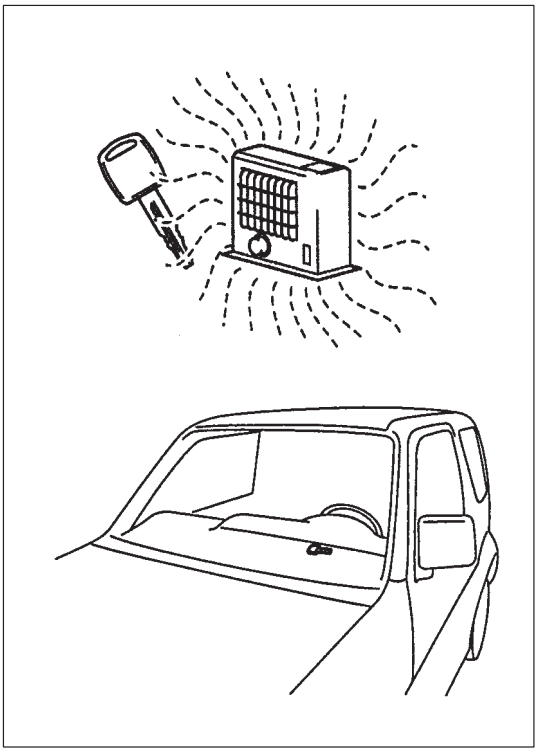

- Do not leave ignition key where high temperature is anticipated. High temperature will cause transponder in ignition key to be abnormal or damaged.

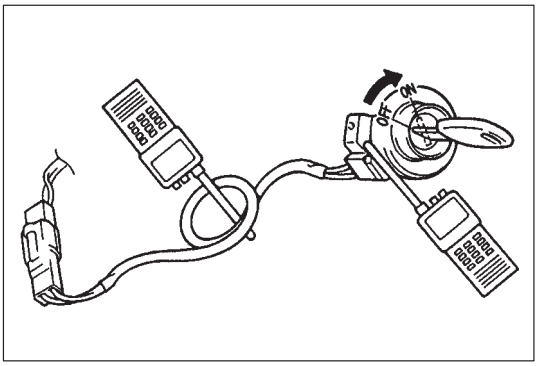

- Do not turn ON ignition switch with a radio antenna placed near coil antenna or its harness to Immobilizer Control Module. Or the system may detect abnormal condition and prevent engine from starting.

For vehicle not equipped with air bag system

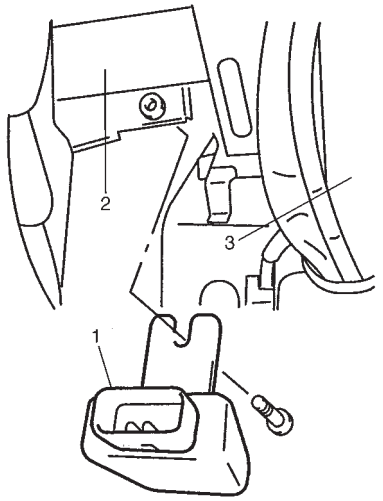

For vehicle equipped with air bag system

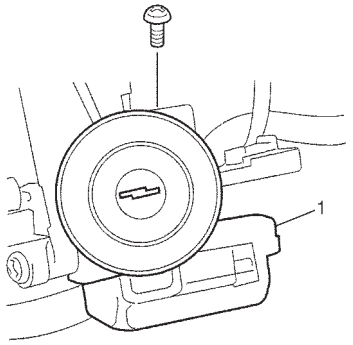

1. Immobilizer Control Module
2. Steering support member
3. Steering shaft

IMMOBILIZER CONTROL MODULE

Removal

1) Disconnect negative (–) cable at battery.
2) Remove steering column hole cover.
3) [Vehicle equipped with air bag system]
   Remove steering column mounting bolts, then remove steering column upper and lower cover.
4) Disconnect coupler at Immobilizer Control Module.
5) Remove immobilizer control module.

Installation

Reverse removal procedure for installation.

NOTE:

After replacing Immobilizer Control Module, be sure to register Transponder code and ECM/Immobilizer Control Module code in Immobilizer Control Module and ECM/Immobilizer Control Module code in ECM by performing procedure described in "Procedure After Immobilizer Control Module Replacement".

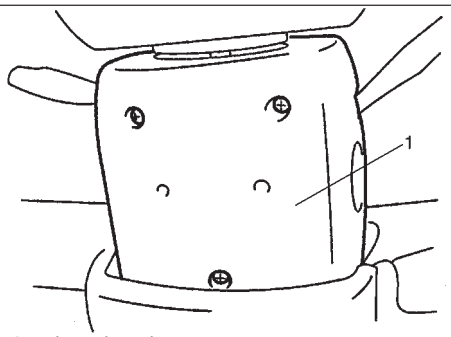

1. Steering column lower cover

COIL ANTENNA (Vehicle not equipped with air bag system)

Removal

1) Disconnect negative (–) cable at battery.
2) Remove steering column hole cover.
3) Remove steering column upper and lower cover.

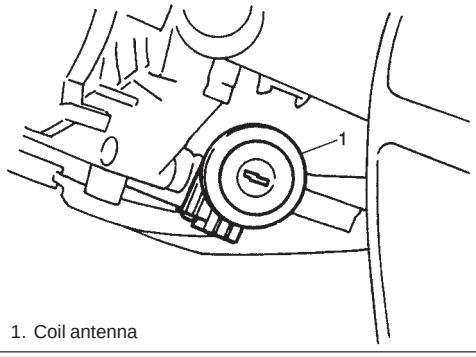

1. Coil antenna

4)Remove coil antenna.

Installation

For installation, reverse removal procedure.

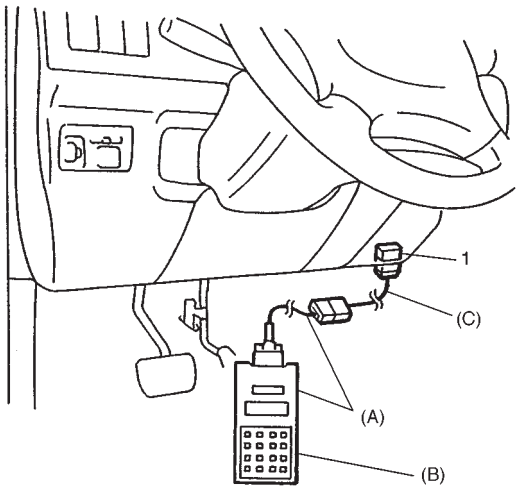

1. Data link connector (DLC)

HOW TO REGISTER IGNITION KEY

Register the ignition key with a built-in transponder in Immobilizer Control Module by using the following procedure.

CAUTION:
When registering the ignition key including a transponder into the immobilizer control module by using Suzuki scan tool, confirm that the knob color of the ignition key to be registered for the vehicle with/without air bag system is as shown below. The ignition key with wrong knob color cannot be registered.

- **Knob color of ignition key for vehicle with air bag system: Dark gray**
- **Knob color of ignition key for vehicle without air bag system: Black**

1) Prepare SUZUKI scan tool and cartridge for immobilizer control system.
2) With ignition switch OFF, connect SUZUKI scan tool to data link connector (DLC) located on underside of instrument panel at driver's seat side.

(A): 09931-76011 (SUZUKI scan tool)
(B): Immobilizer cartridge
(C): 09931-76030 (16/14 pin DLC cable)

NOTE:
For operation procedure of SUZUKI scan tool, refer to SUZUKI scan tool operator's manual.

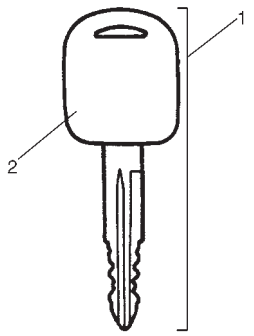

1. Ignition key with built-in transponder
2. Key knob

3) Prepare ignition key with a built-in transponder. And then turn ignition switch ON by using it.
4) Number of Transponder codes for ignition key with a built-in transponder that can be registered in Immobilizer Control Module is limited to 4. If needed, clear all Transponder codes for ignition key with a built-in transponder that have been registered in Immobilizer Control Module by executing the "CLR. TRANS COD (CLEAR TP CODE)" command in the SELECT MODE menu by using SUZUKI scan tool.

NOTE:
When "CLR. TRANS COD (CLEAR TP CODE)" command is executed with the malfunction indicator lamp (if not equipped with immobilizer indicator lamp) ON or the immobilizer indicator lamp ON, it remains ON even after execution of that command is over. It will start flashing when the ignition switch is turned OFF once and then turned ON after some seconds.

5) Using SUZUKI scan tool, register Transponder code in Immobilizer Control Module by executing “ENT. TRANS COD (ENT. TP CODE)” command in SELECT MODE menu.
6) [Vehicle not equipped with immobilizer indicator lamp]
   Make sure that malfunction indicator lamp lights when ignition switch is turned OFF once and then ON.
   [Vehicle equipped with immobilizer indicator lamp]
   Make sure that immobilizer indicator lamp lights when ignition switch is turned OFF once and then ON.
7) If any other Transponder code for ignition key with a built-in transponder needs to be registered, repeat above steps 3), 5) and 6).

NOTE:

- **Up to 4 Transponder codes for ignition key with a built-in transponder can be registered.**
- **It is not possible to register the same Transponder code for ignition key with a built-in transponder as the one already registered in Immobilizer Control Module.**

PROCEDURE AFTER IMMOBILIZER CONTROL MODULE REPLACEMENT

When Immobilizer Control Module was replaced, including when replaced because rechecking by using a known-good Immobilizer Control Module was necessary during trouble diagnosis, register Transponder code and ECM/Immobilizer Control Module code in Immobilizer Control Module and ECM/Immobilizer Control Module code in ECM by performing following procedure.

CAUTION:
When registering the ignition key including a transponder into the immobilizer control module by using Suzuki scan tool, confirm that the knob color of the ignition key to be registered for the vehicle with/without air bag system is as shown below. The ignition key with wrong knob color cannot be registered.
- **Knob color of ignition key for vehicle with air bag system: Dark gray**
- **Knob color of ignition key for vehicle without air bag system: Black**

1) Perform steps 1) and 2) described in “How To Register Ignition Key”.
2) Prepare ignition key with a built-in transponder. And then turn ignition switch ON by using it.
3) Using SUZUKI scan tool, clear all transponder codes registered in Immobilizer Control Module by executing “CLR. TRANS COD (CLEAR TP CODE)” command in SELECT MODE menu.

   NOTE:
   When “CLR. TRANS COD (CLEAR TP CODE)” command is executed with the malfunction indicator lamp (if not equipped with immobilizer indicator lamp) ON or the immobilizer indicator lamp ON, it remains ON even after execution of that command is over. It will start flashing when the ignition switch is turned OFF once and then turned ON after some seconds.

4) Using SUZUKI scan tool, register Transponder code in Immobilizer Control Module by executing “ENT. TRANS COD (ENT. TP CODE)” command in SELECT MODE menu.
5) Using SUZUKI scan tool, register ECM/Immobilizer Control Module code in both Immobilizer Control Module and ECM by executing “RECORD ECU (RECORD ECM/PCM/ICM)” command in SELECT MODE menu.
6) [Vehicle not equipped with immobilizer indicator lamp]
   Make sure that malfunction indicator lamp lights when ignition switch is turned OFF once and then ON.
   [Vehicle equipped with immobilizer indicator lamp]
   Make sure that immobilizer indicator lamp lights when ignition switch is turned OFF once and then ON.

7) If any other Transponder code for ignition key with a built-in transponder needs to be registered, repeat above steps 2), 4) and 6).

NOTE:
- **Up to 4 Transponder codes for ignition key with a built-in transponder can be registered.**
- **It is not possible to register the same Transponder code for ignition key with a built-in transponder as the one already registered in Immobilizer Control Module.**

PROCEDURE AFTER ECM REPLACEMENT

When ECM was replaced, including when replaced because rechecking by using a known-good ECM was necessary during trouble diagnosis, register ECM/Immobilizer Control Module code in ECM by performing following procedure.

1) Perform steps 1) and 2) described in “How To Register Ignition Key”. And then turn ignition switch ON.
2) Using SUZUKI scan tool, register ECM/Immobilizer Control Module code in ECM by executing “RECORD ECU (RECORD ECM/lCM)” command in SELECT MODE menu.

   NOTE:
   For operation procedure of SUZUKI scan tool, refer to SUZUKI scan tool operator’s manual.

3) [Vehicle not equipped with immobilizer indicator lamp]
   Make sure that malfunction indicator lamp lights when ignition switch is turned OFF once and then ON.
   [Vehicle equipped with immobilizer indicator lamp]
   Make sure that immobilizer indicator lamp lights when ignition switch is turned OFF once and then ON.

SPECIAL TOOLS

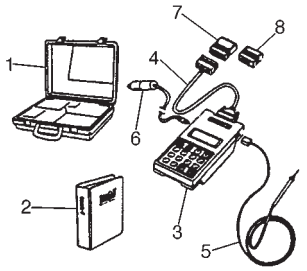

1. Storage case
2. Operator's manual
3. Tech 1A
4. DLC cable
5. Test lead/probe
6. Power source cable
7. DLC cable adaptor
8. Self-test adaptor

09931-76011
SUZUKI scan tool (Tech 1A) kit

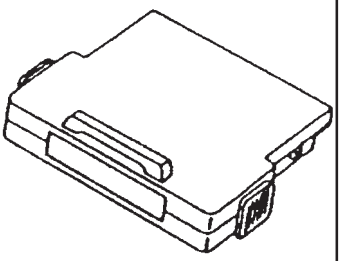

Immobilizer cartridge of version 1.1 or more

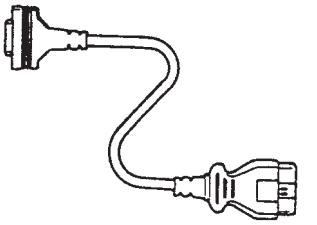

09931-76030
16/14 pin DLC cable

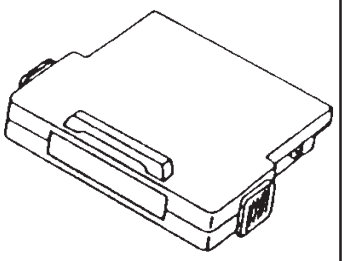

Mass storage cartridge of version 1.5 or more

SECTION 10B

AIR BAG SYSTEM

WARNING:

- **Service on or around the air bag system components or wiring must be performed only by an authorized SUZUKI dealer. Please observe all WARNINGS and SERVICE PRECAUTIONS of ON-VEHICLE SERVICE in this section before performing service on or around the air bag system components or wiring. Failure to follow WARNINGS could result in unintended activation of the system or could render the system inoperative. Either of these two conditions may result in severe injury.**
- **The procedures in this section must be followed in the order listed to disable the air bag system temporarily and prevent false diagnostic trouble codes from setting. Failure to follow procedures could result in possible activation of the air bag system, personal injury or otherwise unneeded air bag system repairs.**

CAUTION:

When fasteners are removed, always reinstall them at the same location from which they were removed. If a fastener needs to be replaced, use the correct part number fastener for that application. If the correct part number fastener is not available, a fastener of equal size and strength (or stronger) may be used. Fasteners that are not reused, and those requiring thread-locking compound, will be called out. The correct torque value must be used when installing fasteners that require it. If the above conditions are not followed, parts or system damage could result.

NOTE:

For the descriptions (items) not found in this section, refer to the same section of the Service Manual mentioned in the FOREWORD of this manual.

CONTENTS

GENERAL DESCRIPTION 10B- 3
Operation of Air Bag System at Collision . . 10B- 3
System Components and Wiring Location View and Connectors 10B- 4
System Wiring Diagram 10B- 5
DIAGNOSIS 10B- 6
Diagnostic Trouble Codes 10B- 6
Use of Special Tools 10B- 6
Intermittents and Poor Connections 10B- 8
Air Bag Diagnostic System Check 10B- 9
Diagnostic Trouble Code (DTC) Check 10B-11
Diagnostic Trouble Code (DTC) Clearance 10B-12
Diagnostic Trouble Code (DTC) Table 10B-13
Table A - “AIR BAG” warning lamp comes ON steady 10B-15
Table B - “AIR BAG” warning lamp does not come ON 10B-15
Table C - “AIR BAG” warning lamp flashes 10B-15
Table D - “AIR BAG” warning lamp can not indicate flashing pattern of DTC 10B-15
Table E - SDM cannot communicate through the serial data circuit 10B-21
DTC B1015 - Passenger air bag initiator circuit resistance high 10B-23
DTC B1016 - Passenger air bag initiator circuit resistance low 10B-23
DTC B1018 - Passenger air bag initiator circuit short to ground 10B-23
DTC B1019 - Passenger air bag initiator circuit short to power circuit 10B-23
DTC B1021 - Driver air bag initiator circuit resistance high 10B-28

DTC B1022 - Driver air bag initiator circuit resistance low 10B-28
DTC B1024 - Driver air bag initiator circuit short to ground 10B-28
DTC B1025 - Driver air bag initiator circuit short to power circuit 10B-28
DTC B1031 - Power source voltage high . . 10B-33
DTC B1032 - Power source voltage low . . . 10B-33
DTC B1041 - Driver pretensioner initiator circuit resistance high 10B-36
DTC B1042 - Driver pretensioner initiator circuit resistance low 10B-36
DTC B1043 - Driver pretensioner initiator circuit short to ground 10B-36
DTC B1044 - Driver pretensioner initiator circuit short to power circuit 10B-36
DTC B1045 - Passenger pretensioner initiator circuit resistance high 10B-36
DTC B1046 - Passenger pretensioner initiator circuit resistance low 10B-36
DTC B1047 - Passenger pretensioner initiator circuit short to ground 10B-36
DTC B1048 - Passenger pretensioner initiator circuit short to power circuit 10B-36
DTC B1051 - Frontal crash detected (system activation command outputted) . . 10B-41
DTC B1071 - Internal SDM fault 10B-41
DTC B1013 - System specifications different from SDM specifications 10B-41
SPECIAL TOOLS 10B-42

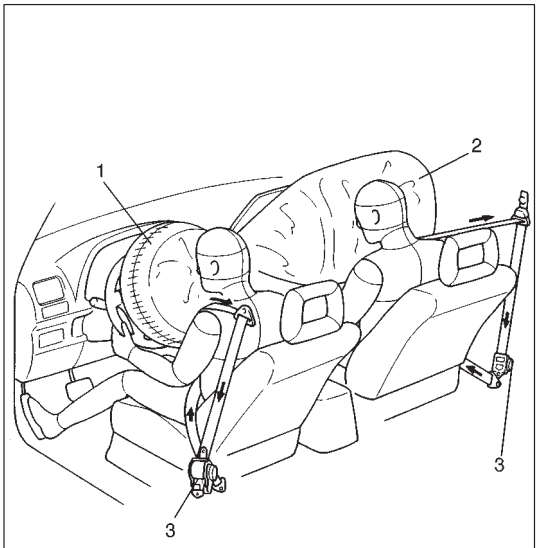

1. Driver side air bag
2. Passenger side air bag
3. Seat belt pretensioner (if equipped)

GENERAL DESCRIPTION

With the air bag system which includes air bags for both the driver's and passenger's sides as well as the seat belt pretensioners (if equipped), the sag of the seat belt is taken up (for seat belt with pretensioner), the driver air bag (inflator) module is deployed from the center of the steering column and the passenger air bag (inflator) module from the top of the instrument panel in front of the front passenger seat in occurrence of a front collision with an impact larger than a certain set value to supplement protection offered by the driver and front passenger seat belts.

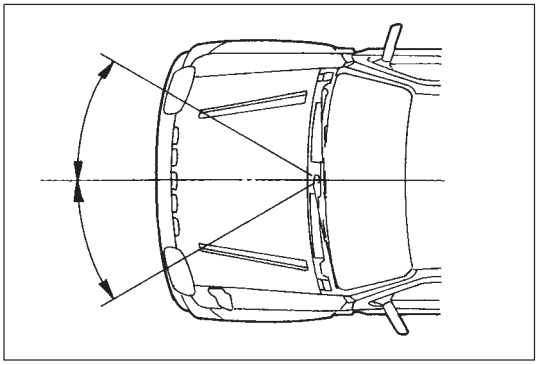

The air bag system is designed to activate only in severe frontal collisions. It is not designed to activate in rear impacts, side impacts, rollovers, or minor frontal collisions, since it would offer no protection in those types of accidents.

OPERATION OF AIR BAG SYSTEM AT COLLISION

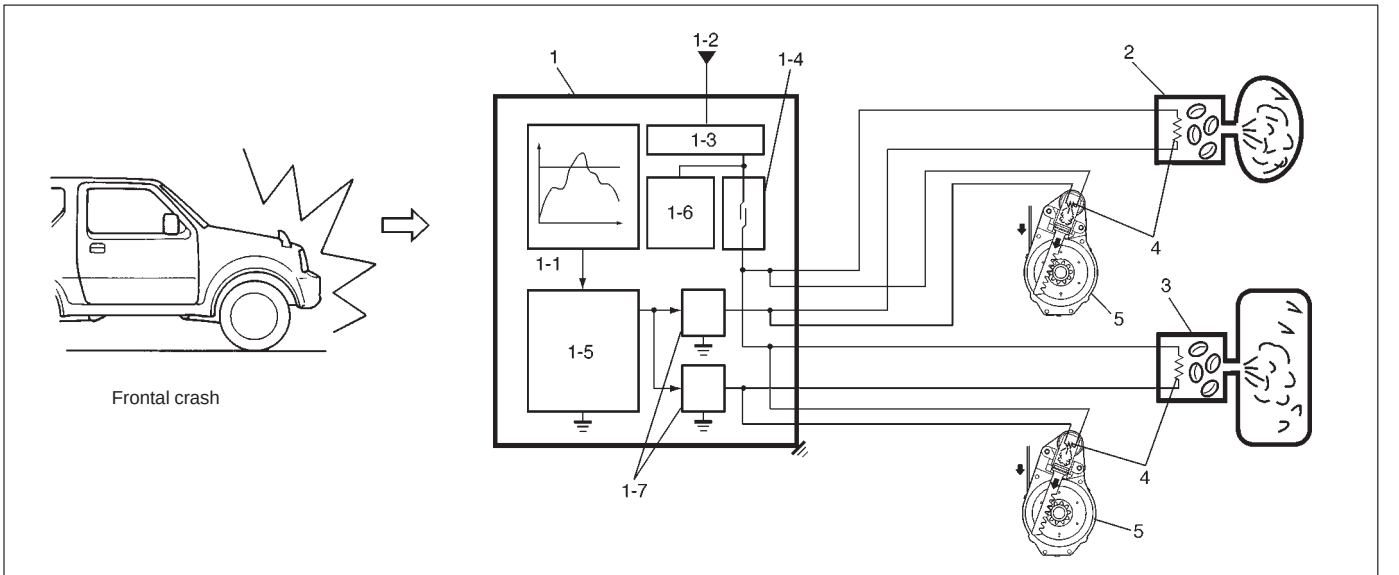

1. SDM
1-1. Sensor
1-2. Power source
1-3. Voltage converter
1-4. Safing sensor
1-5. Micro-controller
1-6. Energy reserve circuit
1-7. Ignition driver circuit
2. Driver air bag
3. Passenger air bag
4. Squib circuit
5. Seat belt pretensioner (if equipped)

SYSTEM COMPONENTS AND WIRING LOCATION VIEW AND CONNECTORS

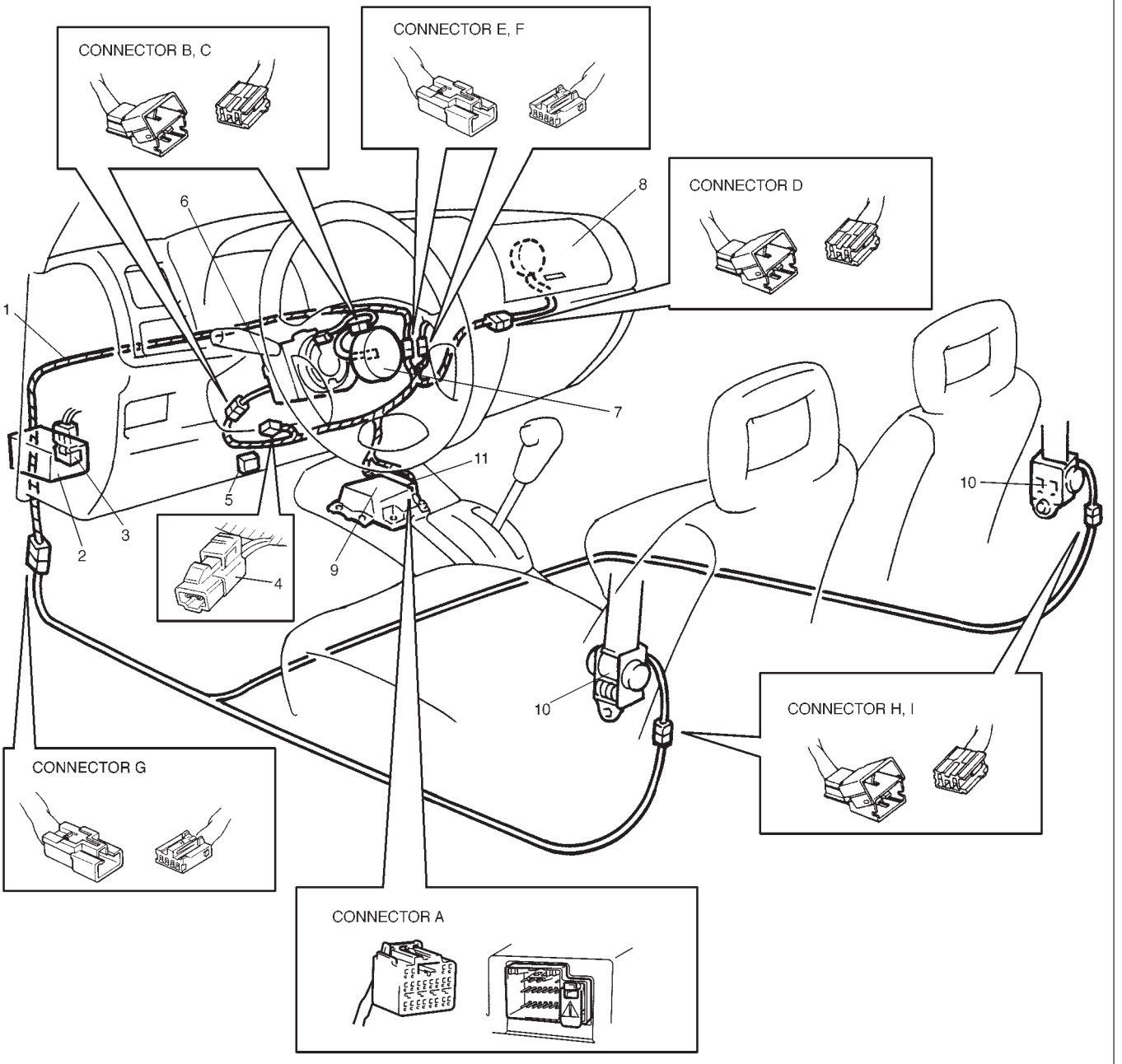

1. Air bag harness
2. Fuse box
3. “AIR BAG” fuse box
4. “AIR BAG” monitor coupler
5. DLC
6. Contact coil assembly
7. Driver air bag (inflator) module
8. Passenger air bag (inflator) module
9. SDM
10. Seat belt pretensioner (retractor assembly) (if equipped)
11. Ground for air bag system

SYSTEM WIRING DIAGRAM

WIRE HARNESS COLOR

B	: Black	G	: Green	V	: Violet
B/W	: Black/White	Gr	: Gray	Y	: Yellow
B/Bl	: Black/Blue	G/R	: Green/Red	P/G	: Pink/Green
Bl	: Blue	Lg	: Lightgreen	Y/R	: Yellow/Red
Bl/R	: Blue/Red	P	: Pink	W	: White
Br	: Brown				

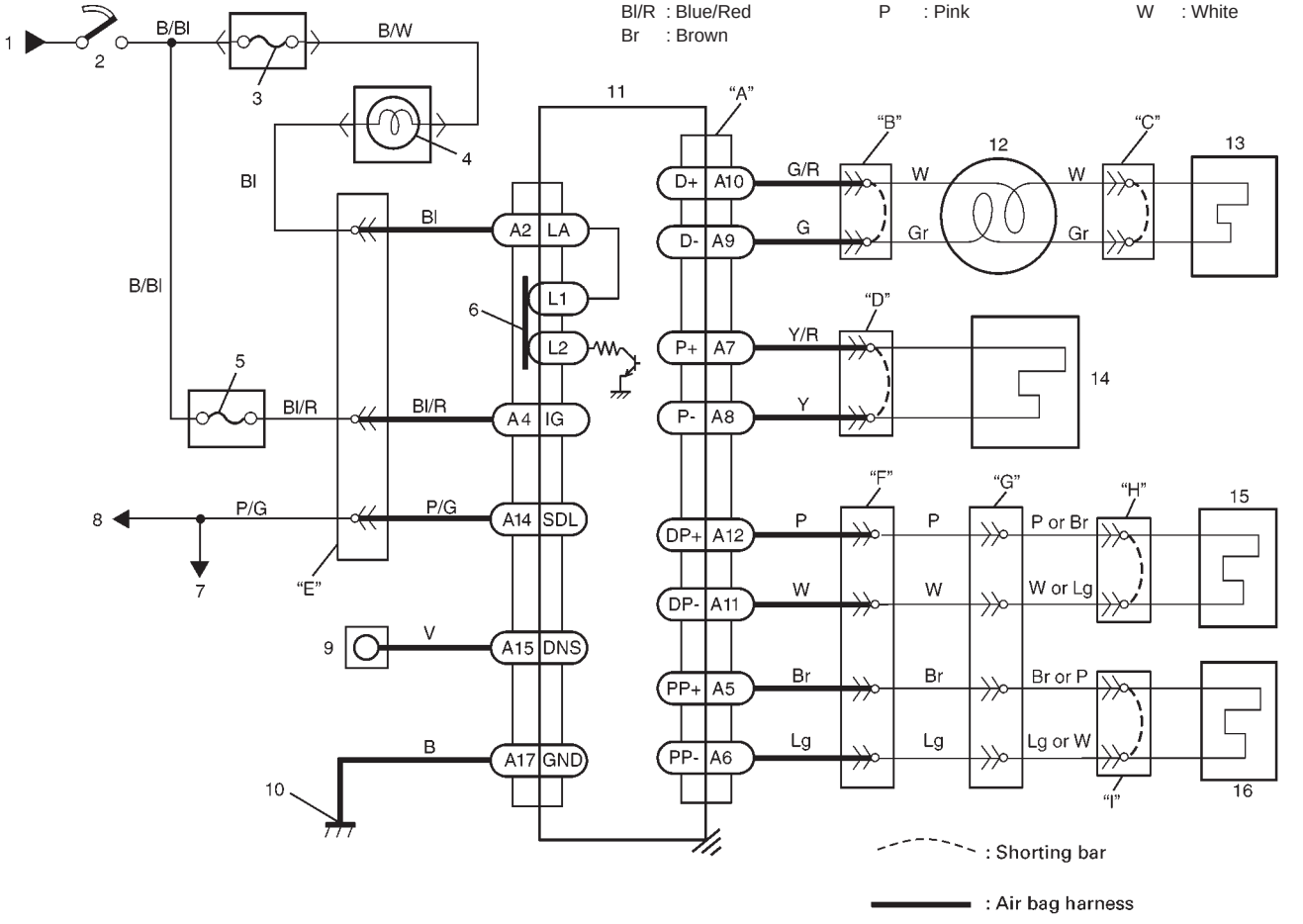

"A" ~ "I" : Connector

TERMINAL ARRANGEMENT OF SDM
(VIEWED FROM HARNESS SIDE)

A4	A3	L2		L1		A2	A1
A12	A11	A10	A9	A8	A7	A6	A5
A20	A19	A18	A17	A16	A15	A14	A13

1. From main fuse
2. Ignition switch
3. "IG·COIL METER" fuse in J/B
4. "AIR BAG" warning lamp in combination meter
5. "AIR BAG" fuse in "AIR BAG" fuse box
6. Connection detection pin
7. To ECM, TCM (if equipped) and ABS control module (if equipped)
8. To data link connector (DLC)
9. "AIR BAG" monitor coupler
10. Ground for air bag system
11. SDM
12. Contact coil assembly
13. Driver air bag (inflator) module
14. Passenger air bag (inflator) module
15. Driver seat belt pretensioner (if equipped)
16. Passenger seat belt pretensioner (if equipped)

CONNECTOR "A" (SDM connector)

TERMINAL	CIRCUIT	
A1	————	
A2	"AIR BAG" warning lamp	
A3	————	
A4	Ignition switch (power source)	
A5	Passenger pretensioner (if equipped)	High
A6		Low
A7	Passenger air bag (inflator) module	High
A8		Low
A9	Driver air bag (inflator) module	Low
A10		High
A11	Driver pretensioner (if equipped)	Low
A12		High
A13	————	
A14	Data link connector (DLC)	
A15	Diagnosis switch	
A16	————	
A17	Ground	
A18	————	
A19	————	
A20	————	

DIAGNOSIS

WARNING:
To avoid deployment when troubleshooting the air bag system, do not use electrical test equipment such as a battery powered or AC powered voltmeter, ohmmeter, etc., or any type of electrical equipment other than that specified in this manual. Do not use a non-powered probe type tester. Instructions in this manual must be followed carefully, otherwise personal injury may result.

DIAGNOSTIC TROUBLE CODES

The AIR BAG DIAGNOSTIC SYSTEM CHECK must always be the starting point of any air bag system diagnosis. The AIR BAG DIAGNOSTIC SYSTEM CHECK checks for proper “AIR BAG” warning lamp operation and checks for air bag diagnostic trouble codes (DTCs) using on-board diagnosis function or SUZUKI scan tool.

USE OF SPECIAL TOOLS

WARNING:
To avoid deployment when troubleshooting the air bag system, do not use electrical test equipment such as a battery powered or AC powered voltmeter, ohmmeter, etc., or any type of electrical equipment other than that specified in this manual. Do not use a non-powered probe type tester. Instructions in this manual must be followed carefully, otherwise personal injury may result.

You should be familiar with the tools listed in this section under the heading SPECIAL TOOLS. You should be able to measure voltage and resistance. You should be familiar with proper use of a scan tool such as Air Bag Driver/ Passenger Load Tool, Connector Test Adapter Kit and the Digital Multimeter.

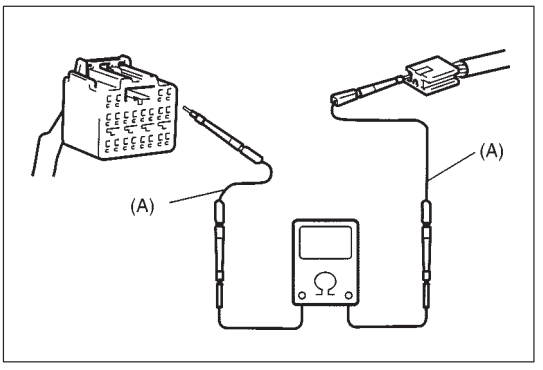

Special Tool (Connector Test Adapter Kit)
(A): 09932-76010

This must be used whenever a diagnostic procedure requests checking or probing a terminal.
Using the appropriate adapter in the special tool will ensure that no damage to the terminal will occur from the multimeter probe, such as spreading or bending.

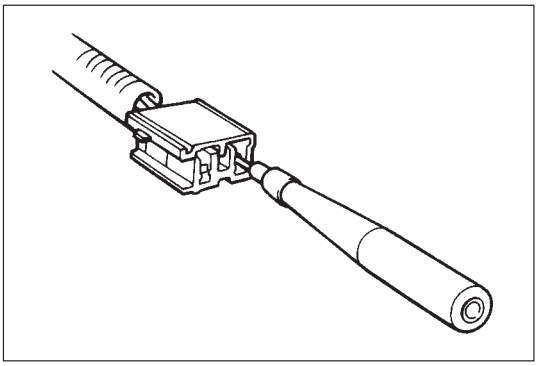

The adapter will also give an idea of whether contact tension is sufficient, helping to find an open or intermittent open due to poor terminal contact.

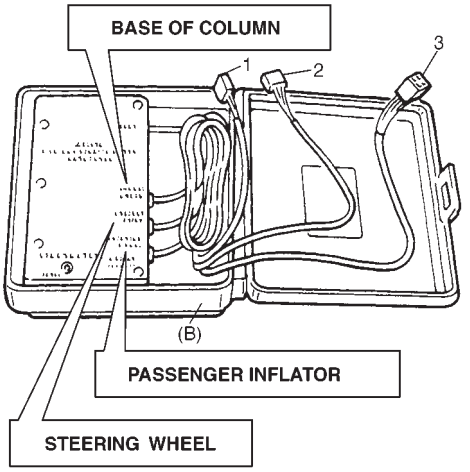

1. Connector for contact coil and driver air bag (inflator) module (Located near the base of the steering column)
2. Connector for driver, passenger air bag (inflator) module and driver and passenger seat belt pretensioners
3. Not used

Special Tool (Air Bag Driver/Passenger Load Tool) (B): 09932-75010

This tool is used only when called for in this section. It is used as a diagnostic aid and safety device to prevent inadvertent air bag (inflator) module deployment.
The load tool has three connectors attached to its case which are electrically functional and serve as resistive load substitutions.
No more than two connectors are used at any time.

One of connectors ("STEERING WHEEL") is used to substitute the load of followings.

- driver air bag (inflator) module when it is connected at the top of the column to the contact coil assembly.
- passenger air bag (inflator) module when it is connected to the air bag harness connector for passenger air bag (inflator) module.

Another connector ("BASE OF COLUMN") is used to substitute the load of the driver air bag (inflator) module and the contact coil assembly when it is connected at the base of the column to the air bag wire harness.
The third connector ("PASSENGER INFLATOR") is not used.

By substituting the resistance of the load tool when called for, a determination can be made as to whether an inflator circuit component is causing system malfunction and which component is causing the malfunction.
The load tool should be used only when specifically called for in the diagnostic procedures.

INTERMITTENTS AND POOR CONNECTIONS

Most intermittents are caused by faulty electrical connections or wiring. When a check for proper connection is requested in a diagnostic flow table, perform careful check of suspect circuits for:

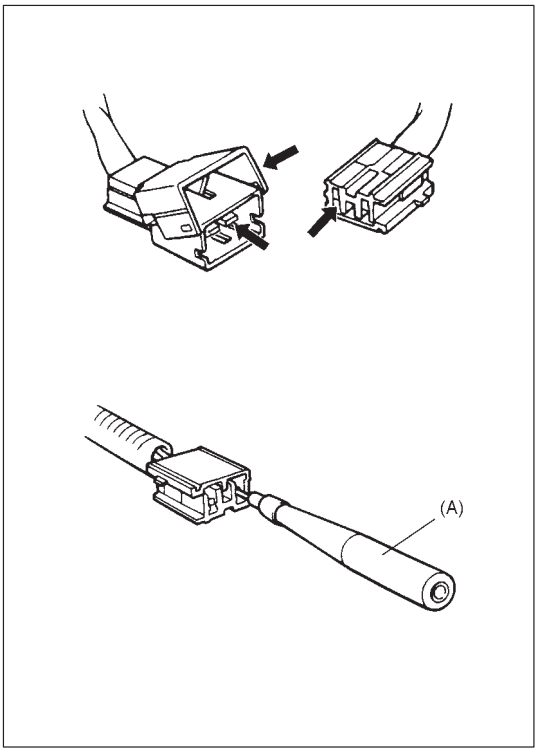

- Poor mating of connector halves, or terminals not fully seated in the connector body (backed out).
- Dirt or corrosion on the terminals. The terminals must be clean and free of any foreign material which could impede proper terminal contact.
  However, cleaning the terminal with a sand paper or the like is prohibited.
- Damaged connector body, exposing the terminals to moisture and dirt, as well as not maintaining proper terminal orientation with the component or mating connector.
- Improperly formed or damaged terminals.
  Check each connector terminal in problem circuits carefully to ensure good contact tension by using the corresponding mating terminal included in the connector test adapter kit (special tool). If contact tension is not enough, reform it to increase contact tension or replace.
  Special Tool (Connector Test Adapter Kit)
  (A): 09932-76010

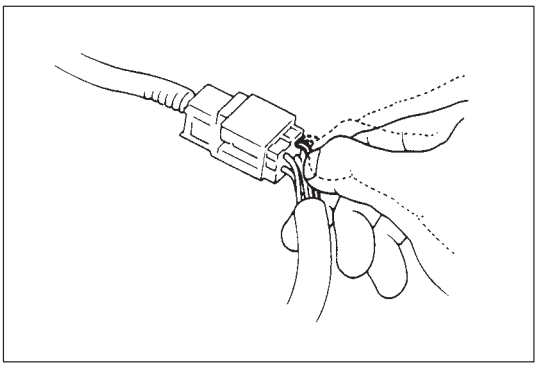

- Poor terminal-to-wire connection.
  Check each wire harness in problem circuits for poor connection by shaking it by hand lightly. If any abnormal condition is found, change the wire harness assembly or component parts with new ones.

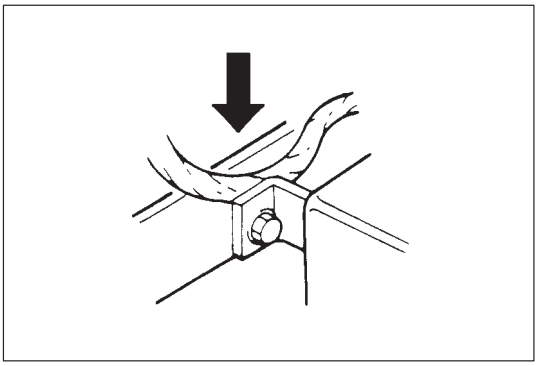

- Wire insulation which is rubbed through, causing an intermittent short as the bare area touches other wiring or parts of the vehicle.
- Wire broken inside the insulation. This condition could cause a continuity check to show a good circuit, but if only 1 or 2 strands of a multi-strand-type wire are intact, resistance could be far too high.

If any abnormality is found, repair or replace as a wire harness assembly.

AIR BAG DIAGNOSTIC SYSTEM CHECK

WARNING:
To avoid deployment when troubleshooting the air bag system, do not use electrical test equipment such as a battery powered or AC powered voltmeter, ohmmeter, etc., or any type of electrical equipment other than that specified in this manual. Do not use a non-powered probe type tester. Instructions in this manual must be followed carefully, otherwise personal injury may result.

CAUTION:
The order in which diagnostic trouble codes are diagnosed is very important. Failure to diagnose the diagnostic trouble codes in the order specified may result in extended diagnostic time, incorrect diagnosis and incorrect parts replacement.

The diagnostic procedures used in this section are designed to find and repair air bag system malfunctions. To get the best results, it is important to use the diagnostic flow tables and follow the sequence listed below.

1) Perform the AIR BAG DIAGNOSTIC SYSTEM CHECK FLOW TABLE.
   (The AIR BAG DIAGNOSTIC SYSTEM CHECK FLOW TABLE must be the starting point of any air bag system diagnosis.
   The AIR BAG DIAGNOSTIC SYSTEM CHECK FLOW TABLE checks for proper “AIR BAG” warning lamp operation through “AIR BAG” warning lamp and whether air bag diagnostic trouble codes exist.)
2) Refer to the proper diagnostic table as directed by the AIR BAG DIAGNOSTIC SYSTEM CHECK FLOW TABLE.
   (The AIR BAG DIAGNOSTIC SYSTEM CHECK FLOW TABLE will lead you to the correct table to diagnose any air bag system malfunctions. Bypassing these procedures may result in extended diagnostic time, incorrect diagnosis and incorrect parts replacement.)
3) Repeat the AIR BAG DIAGNOSTIC SYSTEM CHECK FLOW TABLE after any repair or diagnostic procedures have been performed.
   (Performing the AIR BAG DIAGNOSTIC SYSTEM CHECK FLOW TABLE after all repair or diagnostic procedures will ensure that the repair has been made correctly and that no other malfunctions exist.)

FLOW TABLE TEST DESCRIPTION

STEP1: Check that “AIR BAG” warning lamp lights.
STEP2: Check that “AIR BAG” warning lamp lights.
STEP3: Check diagnosis switch circuit.
STEP4: Check that “AIR BAG” warning lamp flashes 6 times after ignition switch is turned ON.
STEP5: Check that history codes are in SDM memory.
STEP6: Check that current code is in SDM memory.

AIR BAG DIAGNOSTIC SYSTEM CHECK FLOW TABLE

STEP	ACTION	YES	NO
1	1) Make sure that battery voltage is about 11V or higher. 2) Note “AIR BAG” warning lamp as ignition switch is tuned ON. 3) Does “AIR BAG” warning lamp come ON when ignition switch is tuned ON?	Go to step 2.	“AIR BAG” warning lamp does not come ON Proceed to Table B.
2	Does “AIR BAG” warning lamp come ON steady?	“AIR BAG” warning lamp come ON steady Proceed to Table A.	Go to step 3.
3	Does “AIR BAG” warning lamp keep flashing (indicating DTC) when ignition switch is ON?	“AIR BAG” warning lamp flashes Proceed to Table C.	Go to step 4.
4	Does “AIR BAG” warning lamp turn OFF, after flashing 6 times?	Go to step 5.	Go to step 6.
5	1) Check DTC. Refer to DTC CHECK. 2) Not using SUZUKI scan tool: Is flashing patten no. 12 indicated? **NOTE:** **See NOTE1 described below.** Using SUZUKI scan tool: Is “NO CODES” displayed? **NOTE:** **See NOTE2 described below.**	Air bag system is in good condition.	**NOTE:** **See NOTE3 described below.** An intermittent trouble has occurred at some place. Check the connector harness, etc. related to the sensed DTC. Refer to INTERMITTENT AND POOR CONNECTIONS in this section. Then clear DTC (Refer to DTC CLEARANCE.) and repeat this table.
6	1) Check DTC. Refer to DTC CHECK. 2) Not using SUZUKI scan tool: Is flashing patten no. 12 indicated? **NOTE:** **See NOTE1 described below.** Using SUZUKI scan tool: Is “NO CODES” displayed? **NOTE:** **See NOTE2 described below.**	Substitute a known-good SDM and recheck.	**NOTE:** **See NOTE3 described below.** Check and repair according to Flow Table corresponding to that DTC.

NOTE1:
When “AIR BAG” warning lamp doesn’t indicate flashing pattern of DTC while diagnosis switch terminal on “AIR BAG” monitor coupler is grounded, proceed to TABLE D.
NOTE2:
If SDM cannot communicate through serial data circuit, proceed to TABLE E.
NOTE3:
As execution of the DTC clearance will clear all DTCs, be sure to record all DTCs before servicing.

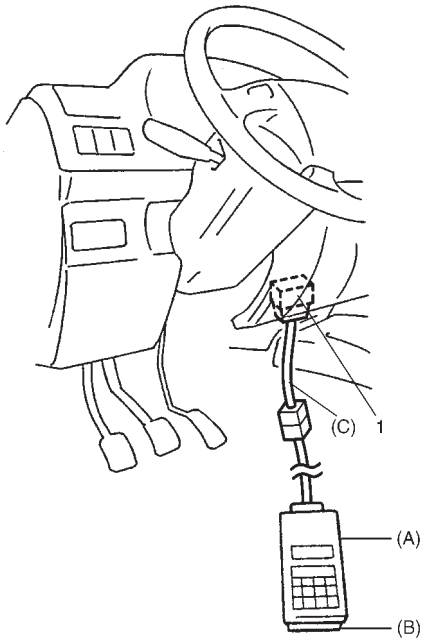

1. Data link connector (DLC)

DIAGNOSTIC TROUBLE CODE (DTC) CHECK

Using SUZUKI scan tool

1) Turn ignition switch to OFF position.
2) After setting cartridge to SUZUKI scan tool, connect it to data link connector (DLC) located on underside of instrument panel at driver's seat side.

   Special Tool
   (A): 09931-76011 (SUZUKI scan tool)
   (B): Mass storage cartridge
   (C): 09931-76030 (16/14 pin DLC cable)

3) Turn ignition switch to ON position.
4) Read DTC according to instructions displayed on SUZUKI scan tool and print it or write it down. Refer to SUZUKI scan tool operator's manual for further details.
5) After completing the check, turn ignition switch to OFF position and disconnect SUZUKI scan tool from data link connector (DLC).

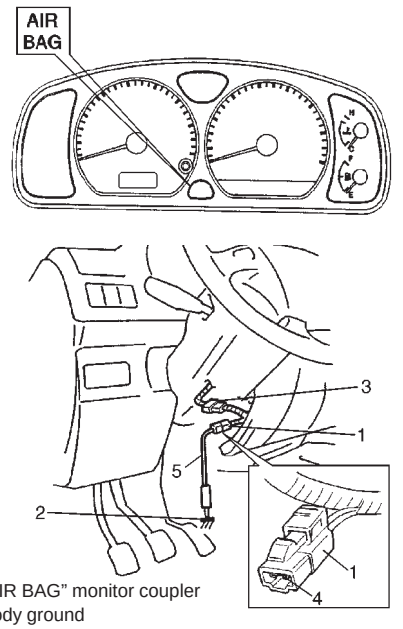

1. "AIR BAG" monitor coupler
2. Body ground
3. Connector for contact coil and combination switch assembly (Yellow connector)
4. Diagnosis switch terminal
5. Service wire

Not using SUZUKI scan tool

1) Check that malfunction indicator lamp ("AIR BAG" warning lamp) comes ON when ignition switch is turned to ON position. If it does not come "ON", proceed to TABLE B.
2) Using service wire, ground diagnosis switch terminal in monitor coupler.
3) Read DTC from flashing pattern of malfunction indicator lamp ("AIR BAG" warning lamp). (Refer to DTC TABLE.)
4) After completing the check, turn ignition switch to OFF position and disconnect service wire from "AIR BAG" monitor coupler.

EXAMPLE: When driver air bag initiator circuit resistance high (DTC B1021) is set

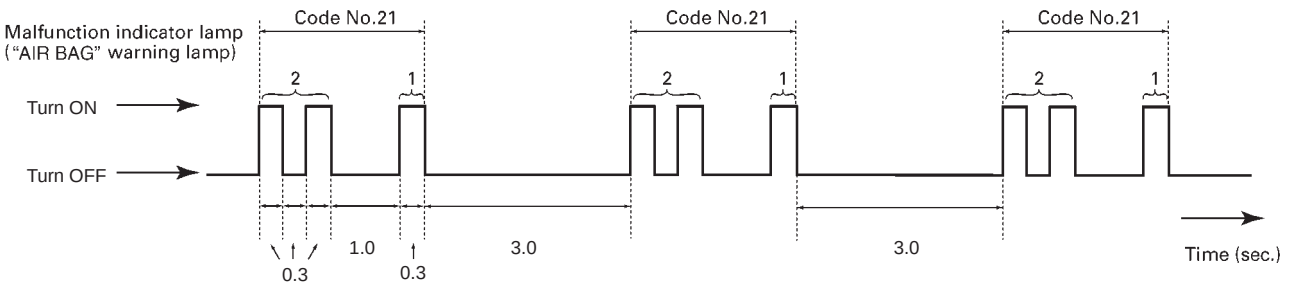

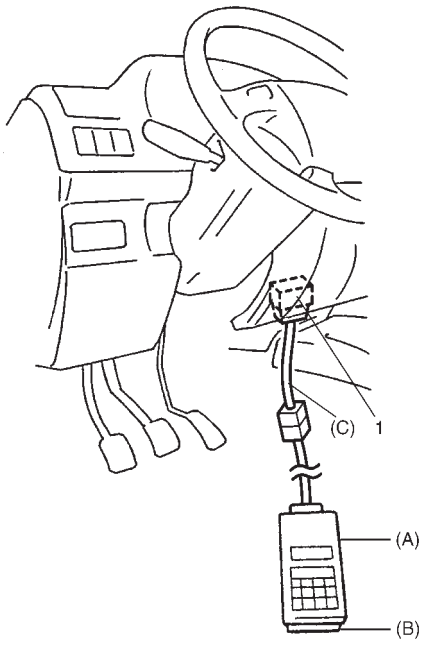

1. Data link connector (DLC)

DIAGNOSTIC TROUBLE CODE (DTC) CLEARANCE

Using SUZUKI scan tool

1) Turn ignition switch to OFF position.
2) Connect SUZUKI scan tool to data link connector (DLC) in the same manner as when making this connection for DTC check.

   Special Tool
   (A): 09931-76011 (SUZUKI scan tool)
   (B): Mass storage cartridge
   (C): 09931-76030 (16/14 pin DLC cable)
3) Turn ignition switch to ON position.
4) Erase DTC according to instructions displayed on SUZUKI scan tool.
   Refer to SUZUKI scan tool operator's manual for further details.
5) After completing the check, turn ignition switch to OFF position and disconnect SUZUKI scan tool from DLC.
6) Perform DTC CHECK and confirm that normal DTC (NO CODES) is displayed and not malfunction DTC.

   NOTE:
   If DTC B1051 or DTC B1071 is stored in SDM, it is not possible to clear DTC.

Not using SUZUKI scan tool

1) Turn ignition switch to ON position and wait about 6 seconds or more.
2) Using service wire, repeat shorting and opening between diagnosis switch terminal on "AIR BAG" monitor coupler and body ground 5 times at about 1 second intervals.
3) Perform DTC CHECK and confirm that normal DTC (DTC 12) is displayed and not malfunction DTC.

   NOTE:
   If DTC B1051 or DTC B1071 is stored in SDM, it is not possible to clear DTC.

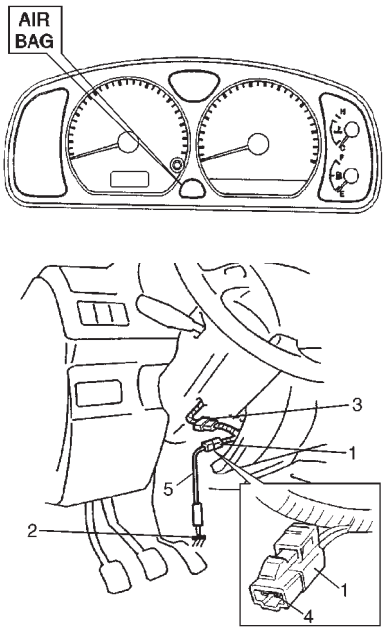

1. "AIR BAG" monitor coupler
2. Body ground
3. Connector for contact coil and combination switch assembly (Yellow connector)
4. Diagnosis switch terminal
5. Service wire

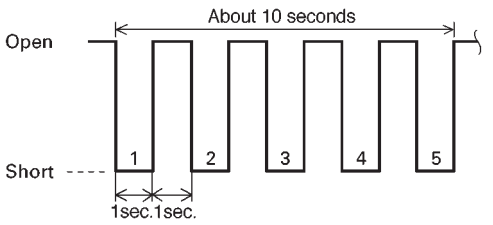

DIAGNOSTIC TROUBLE CODE (DTC) TABLE

DTC	"AIR BAG" warning lamp flashing pattern		Diagnosis		
	NO.	MODE			
–	12		Normal		———
B1015	15		Passenger air bag circuit	Resistance high	Diagnose trouble according to diagnostic flow table corresponding to each code No.
B1016	16			Resistance low	
B1018	18			Short to ground	
B1019	19			Short to power circuit	
B1021	21	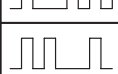	Driver air bag circuit	Resistance high	
B1022	22	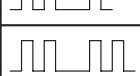		Resistance low	
B1024	24			Short to ground	
B1025	25	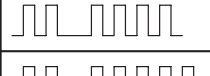		Short to power circuit	
B1031	31	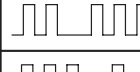	Power source voltage	Too high	
B1032	32			Too low	
B1041	41		Driver pretensioner circuit	Resistance high	
B1042	42	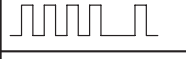		Resistance low	
B1043	43			Short to ground	
B1044	44	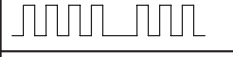		Short to power circuit	
B1045	45		Passenger pretensioner circuit	Resistance high	
B1046	46			Resistance low	
B1047	47			Short to ground	
B1048	48			Short to power circuit	
B1051	51		SDM	Frontal crash detected	
B1071	71			Internal fault	
B1013	13			Specifications different between air bag system and SDM	

NOTE:

- **When 2 or more codes are indicated, the lowest numbered code will appear first.**
- **If a code not listed on the table is displayed, then the SDM is faulty.**
- **Current DTC and history DTC can be identified by lighting and flashing of "AIR BAG" warning lamp as follows.**

	Current DTC is set. (Abnormality exists at present.)	History DTC is set only. (Faulty condition occurred once in the past but normal condition is restored at present.)
"AIR BAG" warning lamp after ignition switch ON	Flashing 6 times and turns on.	Flashing 6 times and turns off.
"AIR BAG" warning lamp when grounding diagnosis switch	Current DTC is displayed.	History DTC is displayed.

However, if a multiple number of DTC's are set an even one of them is a current DTC, "AIR BAG" warning lamp remains on after ignition switch is turned ON. Therefore, it is not possible to identify any of them as to whether it is a current one or a history one. (But use of SUZUKI scan tool will make identification possible.)

TABLE A – “AIR BAG” WARNING LAMP COMES ON STEADY
TABLE B – “AIR BAG” WARNING LAMP DOES NOT COME ON
TABLE C – “AIR BAG” WARNING LAMP FLASHES
TABLE D – “AIR BAG” WARNING LAMP CANNOT INDICATE FLASHING PATTERN OF DTC

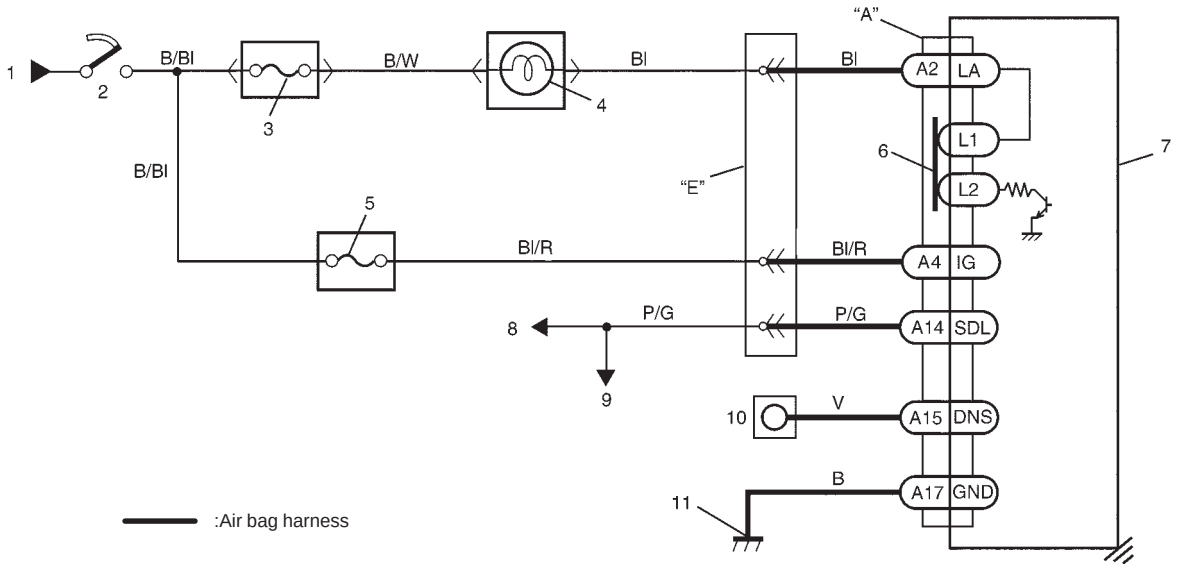

1. From main fuse
2. Ignition switch
3. “IG·COIL METER” fuse in fuse box
4. “AIR BAG” warning lamp in combination meter
5. “AIR BAG” fuse in “AIR BAG” fuse box
6. Connection detection pin
7. SDM
8. To DLC
9. To ECM, TCM (if equipped) and ABS control module (if equipped)
10. “AIR BAG” monitor coupler
11. Ground for air bag system

CAUTION:

- **Be sure to perform AIR BAG DIAGNOSTIC SYSTEM CHECK before starting diagnosis according to flow table.**
- **When measurement of resistance or voltage is required in this table, use a tester along with a correct terminal adapter from special tool (Connector test adapter kit).**
- **When a check for proper connection is required, refer to INTERMITTENT AND POOR CONNECTIONS in this section.**
- **If there is open circuit in the air bag wire harness, connector or terminal is found damaged, replace the wire harness, connector and terminal as an assembly.**

TABLE TEST DESCRIPTION:

Table A:

STEP1: Check “AIR BAG” fuse.
STEP2: Check power source circuit.
STEP3: Check “AIR BAG” warning lamp circuit.

Table B:

STEP1: Check combination meter power feed circuit.
STEP2: Check electrical connection check mechanism in SDM connector.
STEP3: Check “AIR BAG” warning lamp circuit.
STEP4: Check open in “AIR BAG” warning lamp circuit.
STEP5: Check short from “AIR BAG” warning lamp circuit to power circuit.
STEP6: Check “AIR BAG” bulb.

Table C and D:

STEP1: Check “AIR BAG” monitor coupler.
STEP2: Check diagnosis switch circuit for air bag system.

DIAGNOSTIC FLOW TABLE

Table A:

STEP	ACTION	YES	NO
1	1) Ignition switch OFF. 2) Remove and inspect “AIR BAG” fuse. 3) Is fuse good?	Go to step 2.	“Bl/R” wire short to ground. After repair, replace “AIR BAG” fuse.
2	1) Disconnect SDM. 2) Check proper connection to SDM at terminal “A4”. 3) If OK then check voltage between “A4” terminal of SDM connector and body ground with ignition switch ON. 4) Is it 8 V or more?	Go to step 3.	“Bl/R” wire (between “AIR BAG” fuse and SDM connector) open “B/Bl” wire (between ignition switch and “AIR BAG” fuse) open or short to ground
3	1) Disconnect 16-pin connector from combination meter. Refer to COMBINATION METER in SECTION 8. 2) Check resistance between “A2” terminal of SDM connector and body ground. 3) Is resistance 10 Ω or more?	Substitute a known-good SDM and recheck.	“Bl” wire (between combination meter and SDM connector) short to ground

Fig. for STEP 2

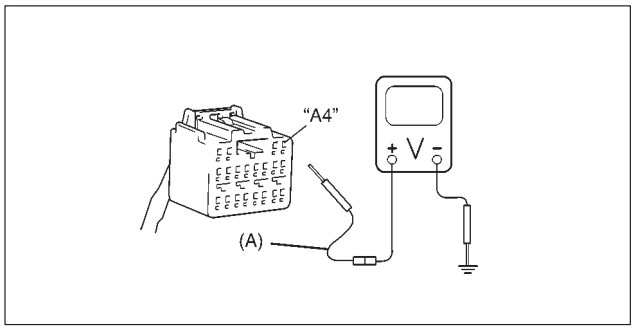

Fig. for STEP 3

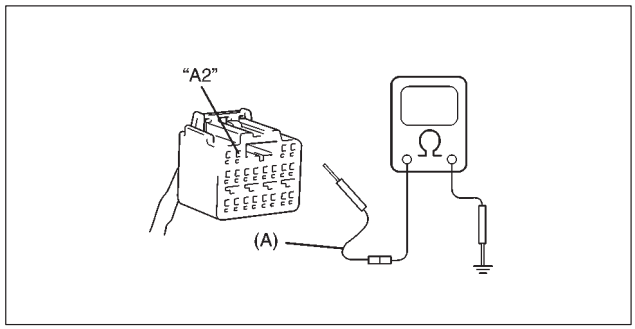

Special Tool
(A): 09932-76010

NOTE:
Upon completion of inspection and repair work, perform following items.
1) Reconnect all air bag system components, ensure all components are properly mounted.
2) Repeat AIR BAG DIAGNOSTIC SYSTEM CHECK to confirm that the trouble has been corrected.

Table B:

STEP	ACTION	YES	NO
1	1) Set parking brake. 2) Note combination meter when ignition switch is turned ON. 3) Does the “BRAKE” indicator (warning lamp) come ON?	Go to step 2.	“B/W” wire, “IG·COIL METER” fuse or J/B (between ignition switch and combination meter) open or short to ground
2	1) With ignition switch OFF, disconnect SDM. 2) Check electrical connection check mechanism. 3) Is it in good condition?	Go to step 3.	Repair electrical connection check mechanism.
3	1) Disconnect SDM. 2) Check proper connection to SDM at terminal “A2”. 3) If OK then check voltage from “A2” terminal of SDM connector to body ground with ignition switch ON. 4) Is it 8 V or more?	Substitute a known-good SDM and recheck.	Go to step 4.
4	1) Remove combination meter. Refer to COMBINATION METER in SECTION 8. 2) Check proper connection to combination meter at “Bl” terminal for “AIR BAG” warning lamp and to SDM at terminal “A2”. 3) If OK then check resistance between “Bl” wire terminal of combination meter connector (16-pin connector) and “A2” terminal of SDM connector. 4) Is resistance 1 Ω or less?	Go to step 5.	Repair high resistance or open in “Bl” wire circuit (between combination meter and SDM).
5	1) Measure voltage from “A2” terminal of SDM connector to body ground with ignition switch ON. 2) Is it 8 V or more?	Repair short from “Bl” wire circuit (between combination meter and SDM) to power circuit.	Go to step 6.
6	1) Remove and inspect “AIR BAG” bulb. 2) Is bulb good?	Substitute a known-good combination meter and recheck.	Replace bulb.

Fig. for STEP 2

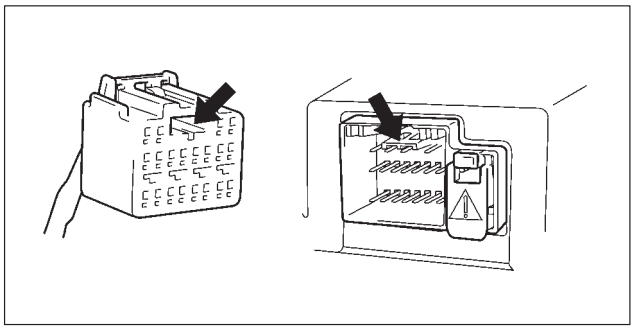

Fig. for STEP 3 and 5

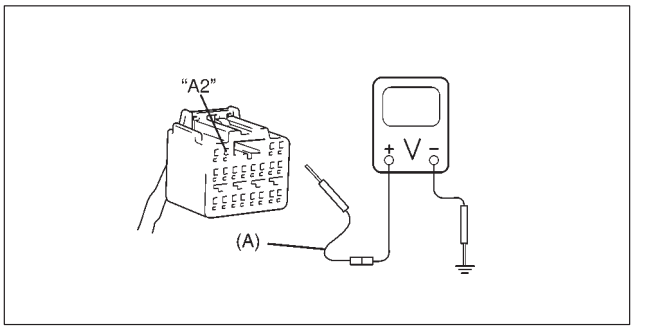

Special Tool
(A): 09932-76010

Fig. for STEP 4

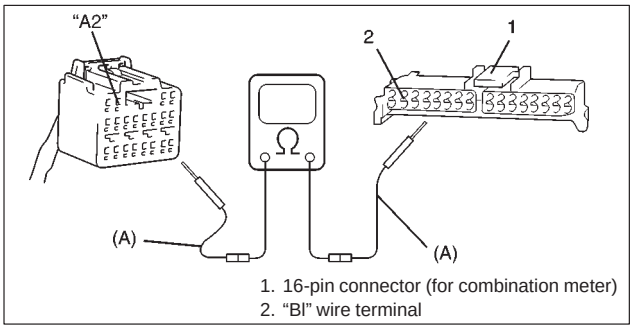

1. 16-pin connector (for combination meter)
2. "BI" wire terminal

Special Tool
(A): 09932-76010

NOTE:
Upon completion of inspection and repair work, perform following items.
1) Reconnect all air bag system components, ensure all components are properly mounted.
2) Repeat AIR BAG DIAGNOSTIC SYSTEM CHECK to confirm that the trouble has been corrected.

Table C:

STEP	ACTION	YES	NO
1	1) Check “AIR BAG” monitor coupler. 2) Is it connected diagnosis switch terminal and ground terminal in “AIR BAG” monitor coupler by service wire?	Remove service wire.	Go to step 2.
2	1) With ignition switch OFF, disconnect SDM. 2) Measure resistance between “A15” terminal of SDM connector and body ground. 3) Is resistance 1 Ω or more?	Substitute a known-good SDM and recheck.	Repair short from “V” wire circuit to ground.

Fig. for STEP 2

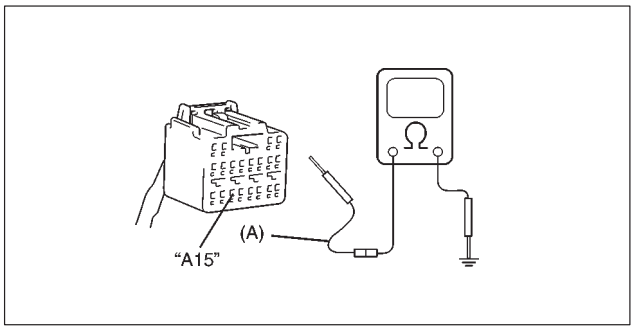

Special Tool
(A): 09932-76010

NOTE:
Upon completion of inspection and repair work, perform following items.
1) Reconnect all air bag system components, ensure all components are properly mounted.
2) Repeat AIR BAG DIAGNOSTIC SYSTEM CHECK to confirm that the trouble has been corrected.

Table D:

STEP	ACTION	YES	NO
1	1) Inspect connection between diagnostic switch terminal on “AIR BAG” monitor coupler and body ground by service wire. 2) Is it securely connected between them by service wire?	Go to step 2.	Properly connection diagnostic switch terminal on “AIR BAG” monitor coupler and body ground by service wire.
2	1) Disconnect SDM connector from SDM. 2) Check for proper connection at “V” wire (“A15” terminal of SDM connector and terminal on “AIR BAG” monitor coupler) terminals. 3) If OK then measure resistance between “V” wire circuit terminals. 4) Is resistance 1 Ω or more?	Check “V” wire terminals. If OK then “V” wire circuit high resistance or open.	Substitute a known good SDM and recheck

Fig. for STEP 2

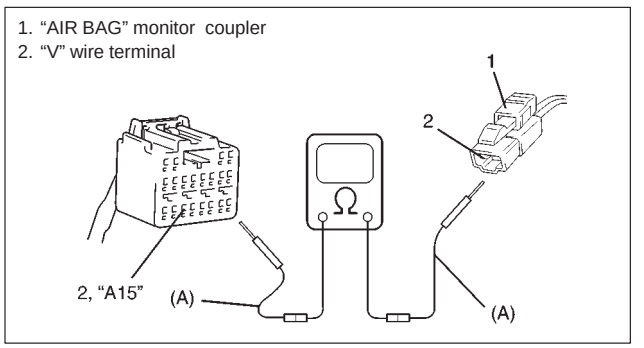

Special Tool
(A): 09932-76010

NOTE:
Upon completion of inspection and repair work, perform following items.
1) Reconnect all air bag system components, ensure all components are properly mounted.
2) Repeat AIR BAG DIAGNOSTIC SYSTEM CHECK to confirm that the trouble has been corrected.

TABLE E – SDM CANNOT COMMUNICATE THROUGH THE SERIAL DATA CIRCUIT

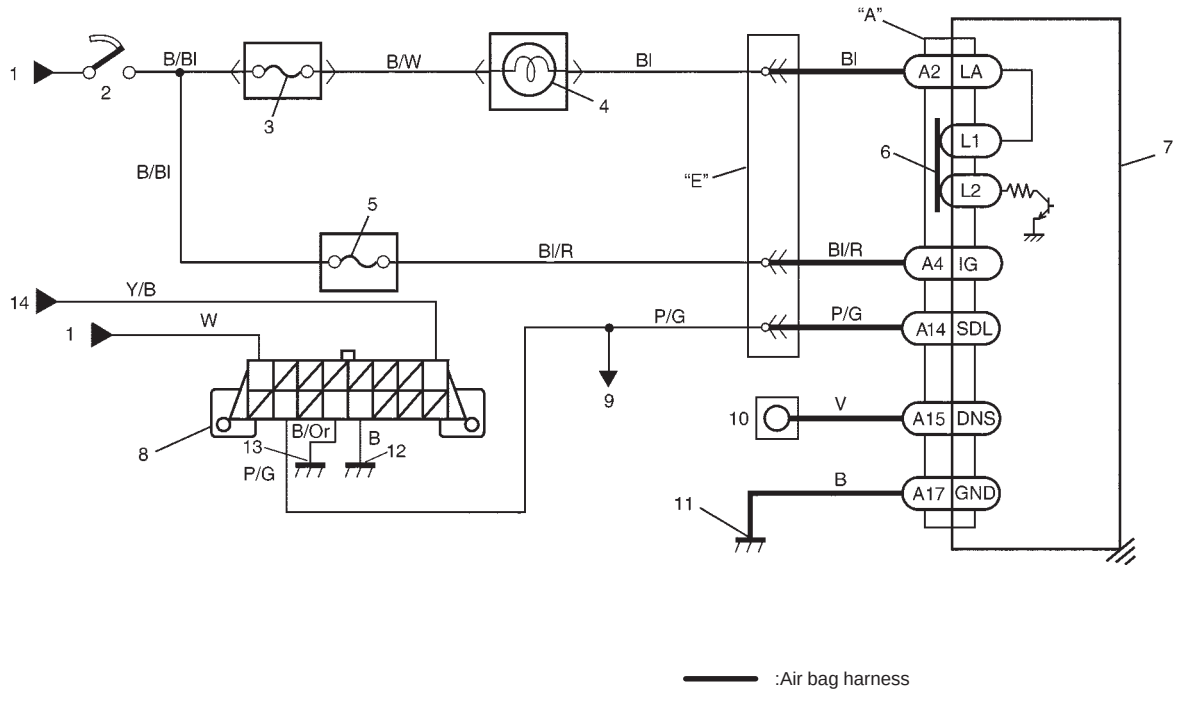

1. From main fuse
2. Ignition switch
3. "IG·COIL METER" fuse in fuse box
4. "AIR BAG" warning lamp in combination lamp
5. "AIR BAG" fuse in fuse box
6. Connection detection pin
7. SDM
8. DLC
9. To ECM, TCM (if equipped) and ABS control module (if equipped)
10. "AIR BAG" monitor coupler
11. Ground for air bag system
12. Ground on body
13. Ground on Engine block
14. Immobilizer control module (if equipped)

CAUTION:

- **Be sure to perform AIR BAG DIAGNOSTIC SYSTEM CHECK before starting diagnosis according to flow table.**
- **When measurement of resistance or voltage is required in this table, use a tester along with a correct terminal adapter from special tool (Connector test adapter kit).**
- **When a check for proper connection is required, refer to INTERMITTENT AND POOR CONNECTIONS in this section.**
- **If there is open circuit in the air bag wire harness, connector or terminal is found damaged, replace the wire harness, connector and terminal as an assembly.**

TABLE TEST DESCRIPTION:

STEP1: An improper connection to the data link connector (DLC) will prevent communications from being established.

STEP2: This test checks whether it is possible to communicate with other control module.

STEP3: This test checks for an open in "P/G" circuit (in air bag harness).

DIAGNOSTIC FLOW TABLE

STEP	ACTION	YES	NO
1	1) Make sure that SUZUKI scan tool is free from malfunction and correct cartridge for air bag system is used. 2) Ignition switch OFF. 3) Check proper connection of SUZUKI scan tool to DLC. 4) Is connection in good condition?	Go to step 2.	Properly connect SUZUKI scan tool to DLC.
2	1) Check if communication is possible by trying communication with other control module (ECM, TCM (if equipped) or ABS control module (if equipped)). 2) Is it possible to communicate with other control module?	Go to step 3.	Repair open in common section of serial data circuit (“P/G” wire circuit) used by all controllers or short to ground or power circuit which has occurred somewhere in serial data circuit (“P/G” wire circuit).
3	1) With ignition switch OFF, disconnect SDM and “E” connector. 2) Check proper connection at “P/G” wire terminal for DLC in “E” connector. 3) If OK, then check resistance between “P/G” wire terminal in “E” connector and “A14” terminal of SDM connector. 4) Is resistance 1 Ω or less?	Substitute a known-good SDM and recheck.	Repair high resistance or open in “P/G” wire circuit (in air bag harness).

Fig. for STEP1

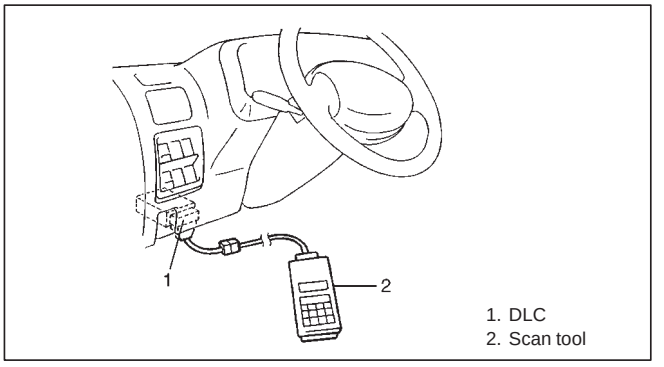

1. DLC
2. Scan tool

Fig. for STEP3

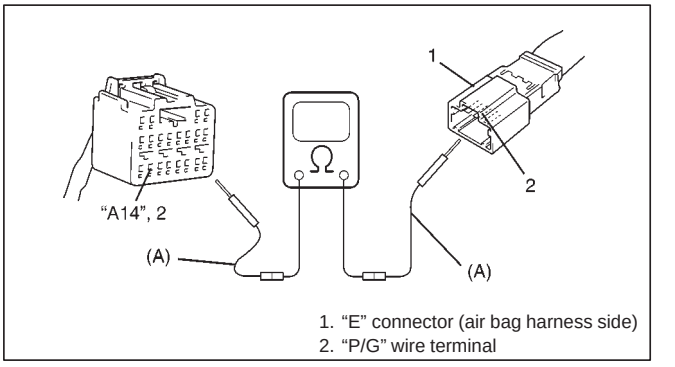

1. “E” connector (air bag harness side)
2. “P/G” wire terminal

Special Tool
(A): 09932-76010

NOTE:
Upon completion of inspection and repair work, perform following items.
1) Reconnect all air bag system components, ensure all components are properly mounted.
2) Repeat AIR BAG DIAGNOSTIC SYSTEM CHECK to confirm that the trouble has been corrected.

DTC B1015 – PASSENGER AIR BAG INITIATOR CIRCUIT RESISTANCE HIGH
DTC B1016 – PASSENGER AIR BAG INITIATOR CIRCUIT RESISTANCE LOW
DTC B1018 – PASSENGER AIR BAG INITIATOR CIRCUIT SHORT TO GROUND
DTC B1019 – PASSENGER AIR BAG INITIATOR CIRCUIT SHORT TO POWER CIRCUIT

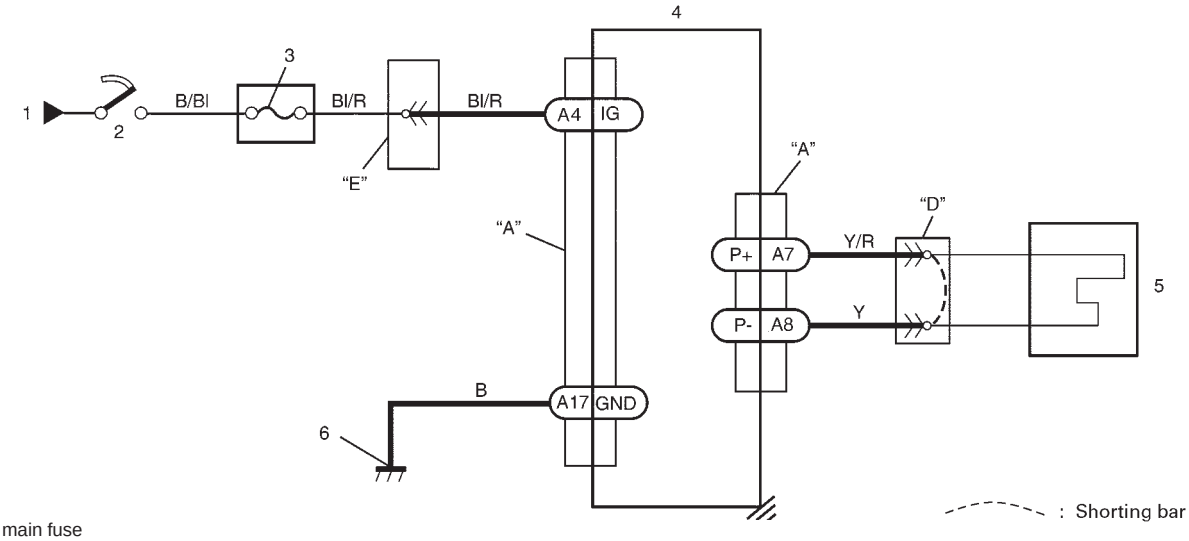

1. From main fuse
2. Ignition switch
3. "AIR BAG" fuse in "AIR BAG" fuse box
4. SDM
5. Passenger air bag (inflator) module
6. Ground for air bag system

CAUTION:
- **Be sure to perform AIR BAG DIAGNOSTIC SYSTEM CHECK before starting diagnosis according to flow table.**
- **When measurement of resistance or voltage is required in this table, use a tester along with a correct terminal adaptor from special tool (Connector test adapter kit).**
- **When a check for proper connection is required, refer to INTERMITTENT AND POOR CONNECTIONS in this section.**
- **If there is open circuit in the air bag wire harness, connector or terminal is found damaged, replace the wire harness, connector and terminal as an assembly.**

DTC WILL SET WHEN:

DTC B1015: The combined resistance of the passenger air bag (inflator) module, harness wiring and connector terminal contact is above a specified value for specified time.

DTC B1016: The combined resistance of the passenger air bag (inflator) module, harness wiring and connector terminal contact is below a specified value for specified time.

DTC B1018: The voltage measured at passenger air bag initiator circuit is below a specified value for specified time.

DTC B1019: The voltage measured at passenger air bag initiator circuit is above a specified value for specified time.

TABLE TEST DESCRIPTION:

DTC B1015, B1016, B1018 and B1019:

STEP 1: Check whether malfunction is in passenger air bag (inflator) module.

STEP 2: Check passenger air bag (inflator) module initiator circuit in air bag harness.

STEP 3: Check passenger air bag (inflator) module initiator circuit in air bag harness. (for DTC B1019 only)

DIAGNOSTIC FLOW TABLE

DTC B1015:

STEP	ACTION	YES	NO
1	1) With ignition switch OFF, disconnect passenger air bag (inflator) module connector behind the glove box. 2) Check proper connection to passenger air bag (inflator) module at terminals in “D” connector. 3) If OK then connect Special Tool (B) to passenger air bag (inflator) module connector disconnected at the step 1). 4) With ignition switch ON, is DTC B1015 current?	Go to step 2.	1) Ignition switch OFF. 2) Replace passenger air bag (inflator) module (Refer to PASSENGER AIR BAG (INFLATOR) MODULE in this section).
2	1) With ignition switch OFF, disconnect SDM. 2) Check proper connection to SDM at terminals “A7” and “A8”. 3) If OK then measure resistance between “A7” and “A8” terminals with connected Special Tool (B). 4) Is resistance 4.5 Ω or less?	Substitute a known-good SDM and recheck.	Repair high resistance or open in “Y” or “Y/R” wire circuit.

Fig. for STEP 1 and 2

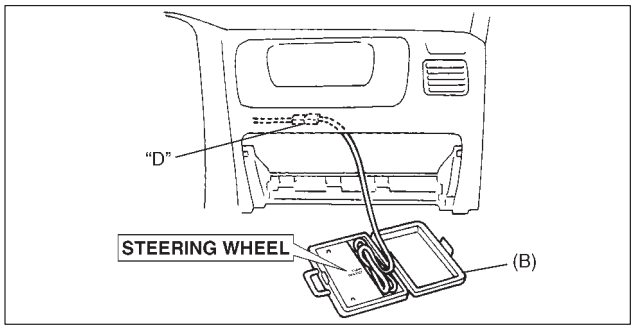

Fig. for STEP 2

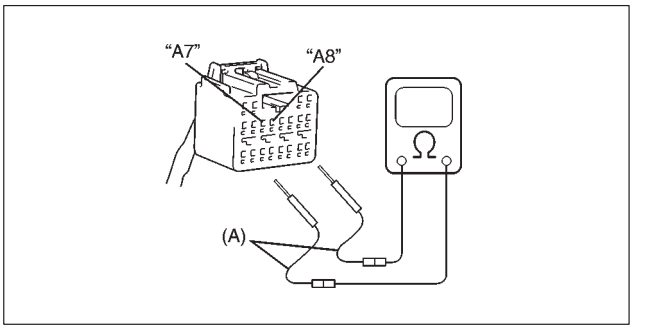

Special Tool
(A): 09932-76010
(B): 09932-75010

NOTE:
Upon completion of inspection and repair work, perform following items.
1) Reconnect all air bag system components, ensure all components are properly mounted.
2) Clear diagnostic trouble codes (Refer to DTC CLEARANCE), if any.
3) Repeat AIR BAG DIAGNOSTIC SYSTEM CHECK to confirm that the trouble has been corrected.

DTC B1016:

STEP	ACTION	YES	NO
1	1) With ignition switch OFF, disconnect passenger air bag (inflator) module connector behind the glove box. 2) Check proper connection to passenger air bag (inflator) module at terminals in "D" connector. 3) If OK then connect Special Tool (B) to passenger air bag (inflator) module connector disconnected at the step 1). 4) With ignition switch ON, is DTC B1016 current?	Go to step 2.	1) Ignition switch OFF. 2) Replace passenger air bag (inflator) module (Refer to PASSENGER AIR BAG (INFLATOR) MODULE in this section).
2	1) With ignition switch OFF, disconnect SDM. 2) Check proper connection to SDM at terminals "A7" and "A8". 3) If OK then measure resistance between "A7" and "A8" terminals with connected Special Tool (B). 4) Is resistance 1.4 Ω or more?	Substitute a known-good SDM and recheck.	Repair short from "Y" wire circuit to "Y/R" wire circuit or from "Y" or "Y/R" wire circuit to other wire circuit.

Fig. for STEP 1 and 2

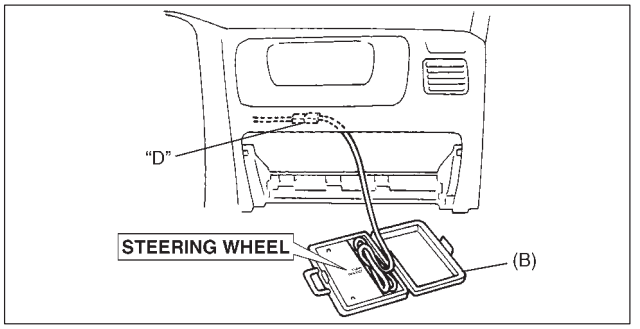

Fig. for STEP 2

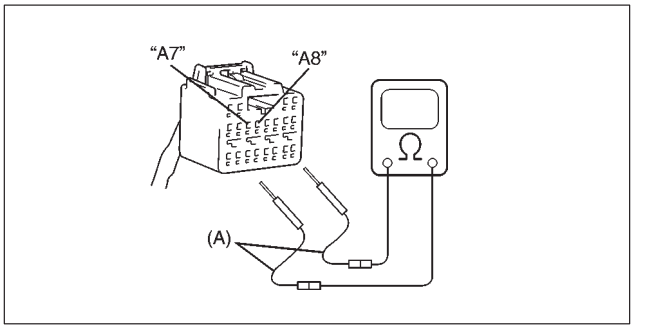

Special Tool
(A): 09932-76010
(B): 09932-75010

NOTE:
Upon completion of inspection and repair work, perform following items.
1) Reconnect all air bag system components, ensure all components are properly mounted.
2) Clear diagnostic trouble codes (Refer to DTC CLEARANCE), if any.
3) Repeat AIR BAG DIAGNOSTIC SYSTEM CHECK to confirm that the trouble has been corrected.

DTC B1018:

STEP	ACTION	YES	NO
1	1) With ignition switch OFF, disconnect passenger air bag (inflator) module connector behind the glove box. 2) Check proper connection to passenger air bag (inflator) module at terminals in "D" connector. 3) If OK then connect Special Tool (B) to passenger air bag (inflator) module connector disconnected at the step 1). 4) With ignition switch ON, is DTC B1018 current?	Go to step 2.	1) Ignition switch OFF. 2) Replace passenger air bag (inflator) module (Refer to PASSENGER AIR BAG (INFLATOR) MODULE in this section).
2	1) With ignition switch OFF, disconnect Special Tool (B) and SDM. 2) Measure resistance between "A7" terminals and body ground. 3) Is resistance 10 Ω or more?	Go to step 3.	Repair short from "Y/R" wire circuit to ground.
3	1) Measure resistance between "A8" terminal and body ground. 2) Is resistance 10 Ω or more?	Substitute a known-good SDM and recheck.	Repair short from "Y" wire circuit to ground.

Fig. for STEP 1, 2 and 3

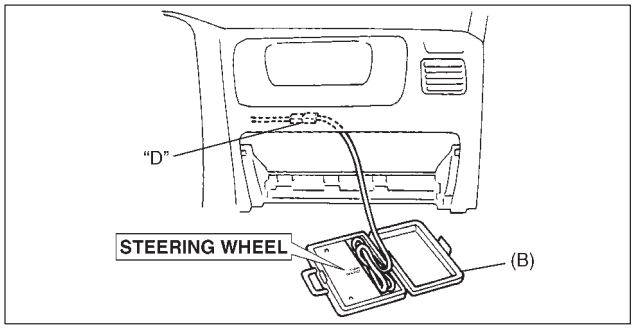

Fig. for STEP 2

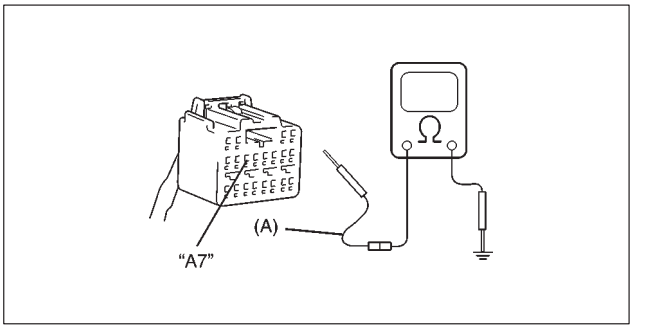

Fig. for STEP 3

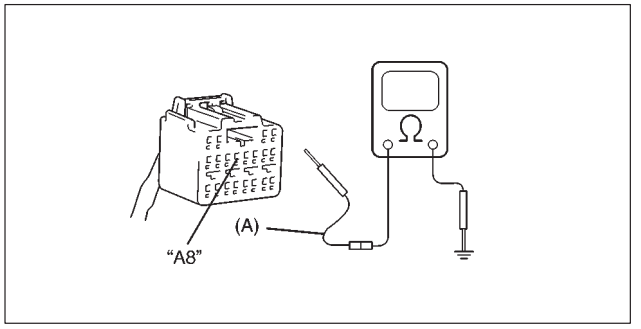

Special Tool
(A): 09932-76010
(B): 09932-75010

NOTE:
Upon completion of inspection and repair work, perform following items.
1) Reconnect all air bag system components, ensure all components are properly mounted.
2) Clear diagnostic trouble codes (Refer to DTC CLEARANCE), if any.
3) Repeat AIR BAG DIAGNOSTIC SYSTEM CHECK to confirm that the trouble has been corrected.

DTC B1019:

STEP	ACTION	YES	NO
1	1) With ignition switch OFF, disconnect passenger air bag (inflator) module connector behind the glove box. 2) Check proper connection to passenger air bag (inflator) module at terminals in "D" connector. 3) If OK then connect Special Tool (B) to passenger air bag (inflator) module connector disconnected at the step 1). 4) With ignition switch ON, is DTC B1019 current?	Go to step 2.	1) Ignition switch OFF. 2) Replace passenger air bag (inflator) module (Refer to PASSENGER AIR BAG (INFLATOR) MODULE in this section).
2	1) With ignition switch OFF, disconnect Special Tool (B) and SDM. 2) Measure voltage from "A7" terminal to body ground. 3) With ignition switch ON, is voltage 1 V or less?	Go to step 3.	Repair short from "Y/R" wire circuit to power circuit.
3	1) Measure voltage from "A8" terminal to body ground. 2) With ignition switch ON, is voltage 1 V or less?	Substitute a known-good SDM and recheck.	Repair short from "Y" wire circuit to power circuit.

Fig. for STEP 1, 2 and 3

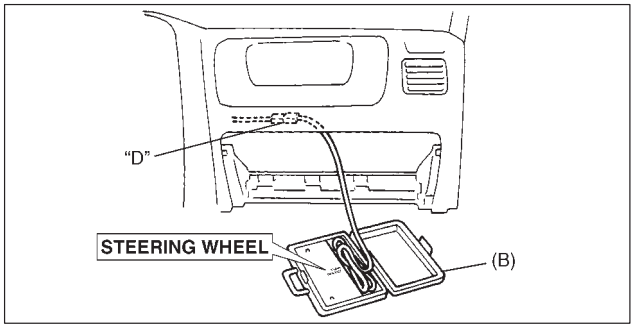

Fig. for STEP 2

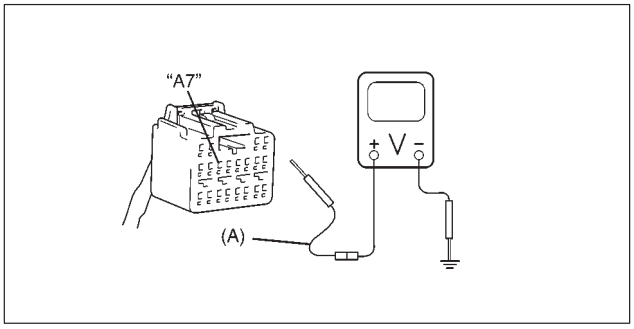

Fig. for STEP 3

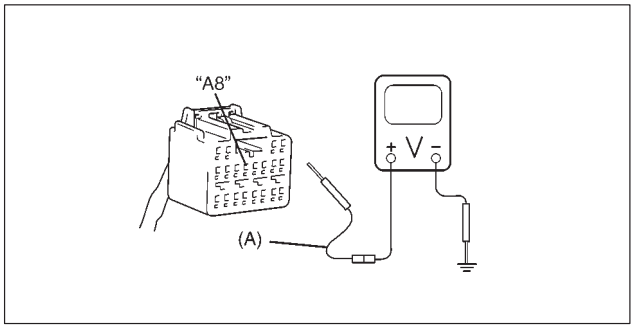

Special Tool
(A): 09932-76010
(B): 09932-75010

NOTE:
Upon completion of inspection and repair work, perform following items.
1) Reconnect all air bag system components, ensure all components are properly mounted.
2) Clear diagnostic trouble codes (Refer to DTC CLEARANCE), if any.
3) Repeat AIR BAG DIAGNOSTIC SYSTEM CHECK to confirm that the trouble has been corrected.

DTC B1021 – DRIVER AIR BAG INITIATOR CIRCUIT RESISTANCE HIGH
DTC B1022 – DRIVER AIR BAG INITIATOR CIRCUIT RESISTANCE LOW
DTC B1024 – DRIVER AIR BAG INITIATOR CIRCUIT SHORT TO GROUND
DTC B1025 – DRIVER AIR BAG INITIATOR CIRCUIT SHORT TO POWER CIRCUIT

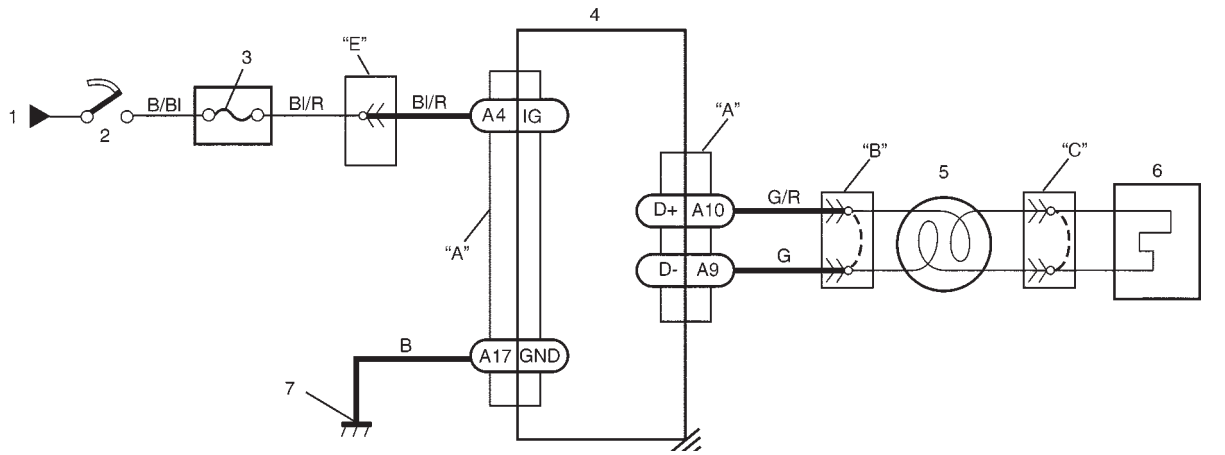

1. From main fuse
2. Ignition switch
3. "AIR BAG" fuse in "AIR BAG" fuse box
4. SDM
5. Contact coil assembly
6. Driver air bag (inflator) module
7. Ground for air bag system

: Shorting bar

: Air bag harness

CAUTION:

- **Be sure to perform AIR BAG DIAGNOSTIC SYSTEM CHECK before starting diagnosis according to flow table.**
- **When measurement of resistance or voltage is required in this table, use a tester along with a correct terminal adapter from special tool (Connector test adapter kit).**
- **When a check for proper connection is required, refer to INTERMITTENT AND POOR CONNECTIONS in this section.**
- **If there is open circuit in the air bag wire harness, connector or terminal is found damaged, replace the wire harness, connector and terminal as an assembly.**

DTC WILL SET WHEN:

DTC B1021: The combined resistance of the driver air bag (inflator) module, contact coil assembly, harness wiring and connector terminal contact is above a specified value for specified time.

DTC B1022: The combined resistance of the driver air bag (inflator) module, contact coil assembly, harness wiring and connector terminal contact is below a specified value for specified time.

DTC B1024: The voltage measured at driver air bag initiator circuit is below a specified value for specified time.

DTC B1025: The voltage measured at driver air bag initiator circuit is above a specified value for specified time.

TABLE TEST DESCRIPTION:

DTC B1021, B1022, B1024 and B1025:

STEP 1: Check whether malfunction is in contact coil and driver air bag (inflator) module or the others.

STEP 2: Check driver air bag (inflator) module initiator circuit in air bag harness.

STEP 3: Check whether malfunction is in contact coil or driver air bag (inflator) module.

DIAGNOSTIC FLOW TABLE

DTC B1021:

STEP	ACTION	YES	NO
1	1) With ignition switch OFF, disconnect contact coil connector located near the base of the steering column. 2) Check proper connection to contact coil at terminals in “B” connector. 3) If OK then connect Special Tool (B) to contact coil connector disconnected at step 1). 4) With ignition switch ON, is DTC B1021 current?	Go to step 2.	Go to step 3.
2	1) With ignition switch OFF, disconnect SDM. 2) Check proper connection to SDM at terminals “A9” and “A10”. 3) If OK then measure resistance between “A9” and “A10” terminals with connected Special Tool (B). 4) Is resistance 4.5 Ω or less?	Substitute a known-good SDM and re-check.	Repair high resistance or open in “G” or “G/R” wire circuit.
3	1) With ignition switch OFF, disconnect Special Tool (B) then reconnect contact coil connector located near the base of the steering column. 2) Remove driver air bag (inflator) module from steering wheel (Refer to DRIVER AIR BAG (INFLATOR) MODULE in SECTION 3C). 3) Check proper connection to driver air bag (inflator) module at terminals in “C” connector. 4) If OK then connect Special Tool (B) to “C” connector. 5) With ignition switch ON, is DTC B1021 current?	1) Ignition switch OFF. 2) Replace contact coil assembly (Refer to COMBINATION SWITCH/ CONTACT COIL AND COMBINATION SWITCH ASSEMBLY in SECTION 3C).	1) Ignition switch OFF. 2) Replace driver air bag (inflator) module (Refer to DRIVER AIR BAG (INFLATOR) MODULE in SECTION 3C).

Fig. for STEP 1 and 2

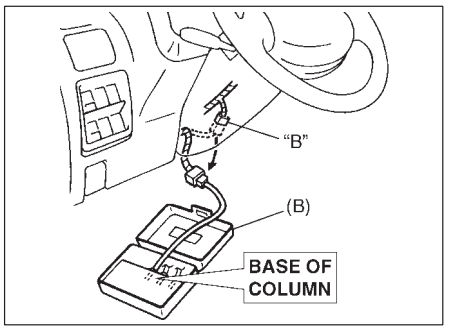

Fig. for STEP 2

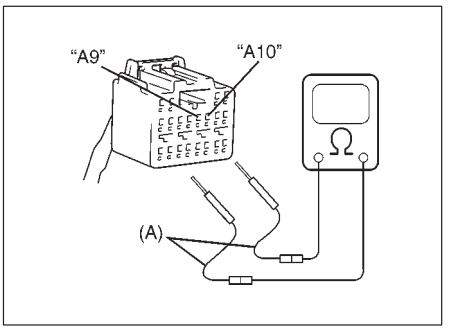

Fig. for STEP 3

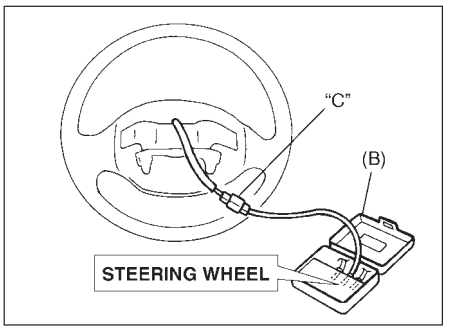

Special Tool
(A): 09932-76010
(B): 09932-75010

NOTE:
Upon completion of inspection and repair work, perform following items.
1) Reconnect all air bag system components, ensure all components are properly mounted.
2) Clear diagnostic trouble codes (Refer to DTC CLEARANCE), if any.
3) Repeat AIR BAG DIAGNOSTIC SYSTEM CHECK to confirm that the trouble has been corrected.

DTC B1022:

STEP	ACTION	YES	NO
1	1) With ignition switch OFF, disconnect contact coil connector located near the base of the steering column. 2) Check proper connection to contact coil at terminals in "B" connector. 3) If OK then connect Special Tool (B) to contact coil connector disconnected at step 1). 4) With ignition switch ON, is DTC B1022 current?	Go to step 2.	Go to step 3.
2	1) With ignition switch OFF, disconnect SDM. 2) Check proper connection to SDM at terminals "A9" and "A10". 3) If OK then measure resistance between "A9" and "A10" terminals with connected Special Tool (B). 4) Is resistance 1.7 Ω or more?	Substitute a known-good SDM and re-check.	Repair short from "G" wire circuit to "G/R" wire circuit or from "G" or "G/R" wire circuit to other wire circuit.
3	1) With ignition switch OFF, disconnect Special Tool (B) then reconnect contact coil connector located near the base of the steering column. 2) Remove driver air bag (inflator) module from steering wheel (Refer to DRIVER AIR BAG (INFLATOR) MODULE in SECTION 3C). 3) Check proper connection to driver air bag (inflator) module at terminals in "C" connector. 4) If OK then connect Special Tool (B) to "C" connector. 5) With ignition switch ON, is DTC B1022 current?	1) Ignition switch OFF. 2) Replace contact coil assembly (Refer to COMBINATION SWITCH/ CONTACT COIL AND COMBINATION SWITCH ASSEMBLY in SECTION 3C).	1) Ignition switch OFF. 2) Replace driver air bag (inflator) module (Refer to DRIVER AIR BAG (INFLATOR) MODULE in SECTION 3C).

Fig. for STEP 1 and 2

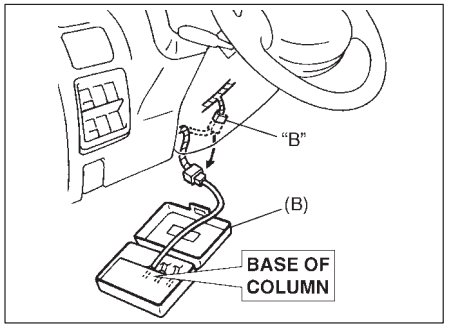

Fig. for STEP 2

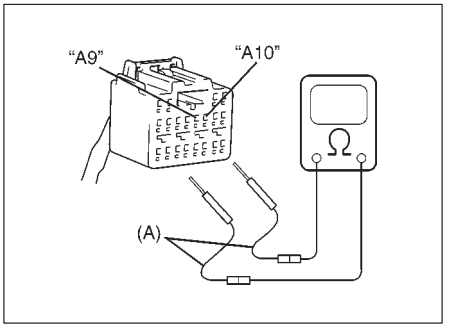

Fig. for STEP 3

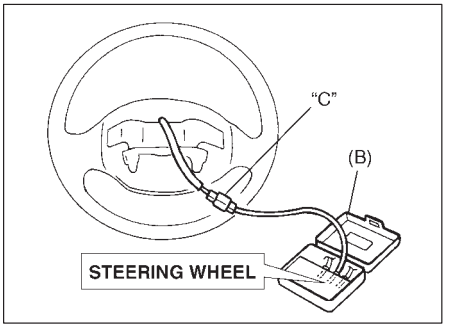

Special Tool
(A): 09932-76010
(B): 09932-75010

NOTE:
Upon completion of inspection and repair work, perform following items.
1) Reconnect all air bag system components, ensure all components are properly mounted.
2) Clear diagnostic trouble codes (Refer to DTC CLEARANCE), if any.
3) Repeat AIR BAG DIAGNOSTIC SYSTEM CHECK to confirm that the trouble has been corrected.

DTC B1024:

STEP	ACTION	YES	NO
1	1) With ignition switch OFF, disconnect contact coil connector located near the base of the steering column. 2) Check proper connection to contact coil at terminals in “B” connector. 3) If OK then connect Special Tool (B) to contact coil connector disconnected at step 1). 4) With ignition switch ON, is DTC B1024 current?	Go to step 2.	Go to step 3.
2	1) With ignition switch OFF, disconnect Special Tool (B) and SDM. 2) Measure resistance between “A9” terminal and body ground and between “A10” terminal and body ground. 3) Are they 10 Ω or more?	Substitute a known-good SDM and re-check.	Repair short from “G” or “G/R” wire circuit to ground.
3	1) With ignition switch OFF, disconnect Special Tool (B) then reconnect contact coil connector located near the base of the steering column. 2) Remove driver air bag (inflator) module from steering wheel (Refer to DRIVER AIR BAG (INFLATOR) MODULE in SECTION 3C). 3) Check proper connection to driver air bag (inflator) module at terminals in “C” connector. 4) If OK then connect Special Tool (B) to “C” connector. 5) With ignition switch ON, is DTC B1024 current?	1) Ignition switch OFF. 2) Replace contact coil assembly (Refer to COMBINATION SWITCH/ CONTACT COIL AND COMBINATION SWITCH ASSEMBLY in SECTION 3C).	1) Ignition switch OFF. 2) Replace driver air bag (inflator) module (Refer to DRIVER AIR BAG (INFLATOR) MODULE in SECTION 3C).

Fig. for STEP 1 and 2

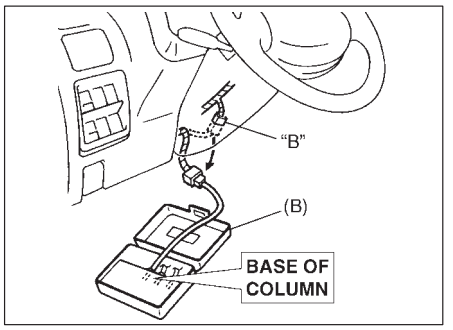

Fig. for STEP 2

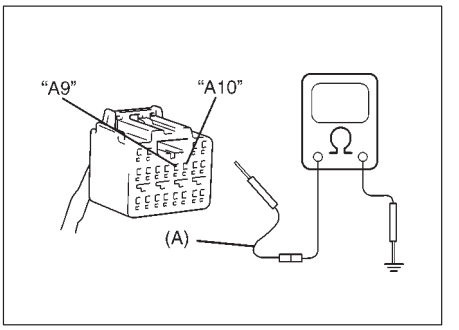

Fig. for STEP 3

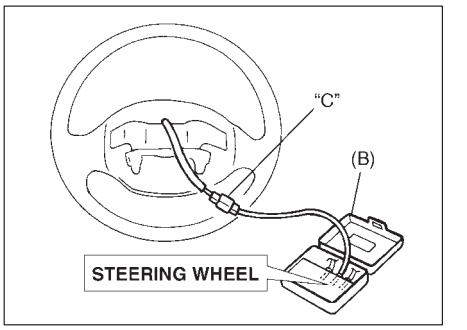

Special Tool
(A): 09932-76010
(B): 09932-75010

NOTE:
Upon completion of inspection and repair work, perform following items.
1) Reconnect all air bag system components, ensure all components are properly mounted.
2) Clear diagnostic trouble codes (Refer to DTC CLEARANCE), if any.
3) Repeat AIR BAG DIAGNOSTIC SYSTEM CHECK to confirm that the trouble has been corrected.

DTC B1025:

STEP	ACTION	YES	NO
1	1) With ignition switch OFF, disconnect contact coil connector located near the base of the steering column. 2) Check proper connection to contact coil at terminals in “B” connector. 3) If OK then connect Special Tool (B) to contact coil connector disconnected at step 1). 4) With ignition switch ON, is DTC B1025 current?	Go to step 2.	Go to step 3.
2	1) With ignition switch OFF, disconnect Special Tool (B) and SDM. 2) Measure voltage from “A9” terminal to body ground and from “A10” terminal to body ground. 3) With ignition switch ON, are they 1 V or less?	Substitute a known-good SDM and recheck.	Repair short from “G” or “G/R” wire circuit to power circuit.
3	1) With ignition switch OFF, disconnect Special Tool (B) then reconnect contact coil connector located near the base of the steering column. 2) Remove driver air bag (inflator) module from steering wheel (Refer to DRIVER AIR BAG (INFLATOR) MODULE in SECTION 3C). 3) Check proper connection to driver air bag (inflator) module at terminals in “C” connector. 4) If OK then connect Special Tool (B) to “C” connector. 5) With ignition switch ON, is DTC B1025 current?	1) Ignition switch OFF. 2) Replace contact coil assembly (Refer to COMBINATION SWITCH/CONTACT COIL AND COMBINATION SWITCH ASSEMBLY in SECTION 3C).	1) Ignition switch OFF. 2) Replace driver air bag (inflator) module (Refer to DRIVER AIR BAG (INFLATOR) MODULE in SECTION 3C).

Fig. for STEP 1 and 2

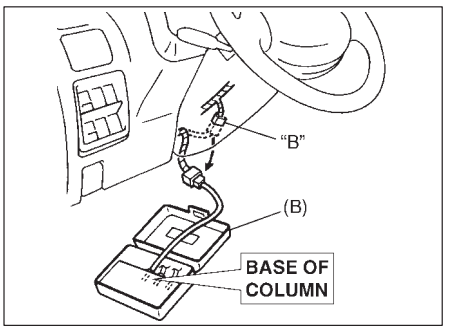

Fig. for STEP 2

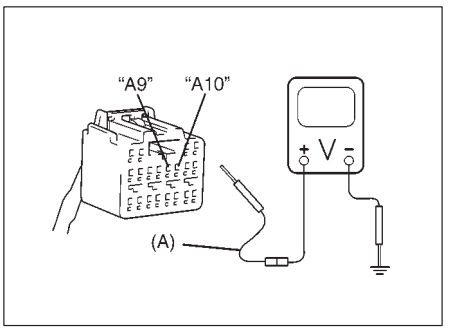

Fig. for STEP 3

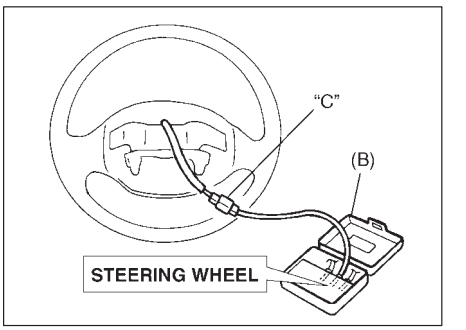

Special Tool
(A): 09932-76010
(B): 09932-75010

NOTE:
Upon completion of inspection and repair work, perform following items.
1) Reconnect all air bag system components, ensure all components are properly mounted.
2) Clear diagnostic trouble codes (Refer to DTC CLEARANCE), if any.
3) Repeat AIR BAG DIAGNOSTIC SYSTEM CHECK to confirm that the trouble has been corrected.

DTC B1031 – POWER SOURCE VOLTAGE HIGH
DTC B1032 – POWER SOURCE VOLTAGE LOW

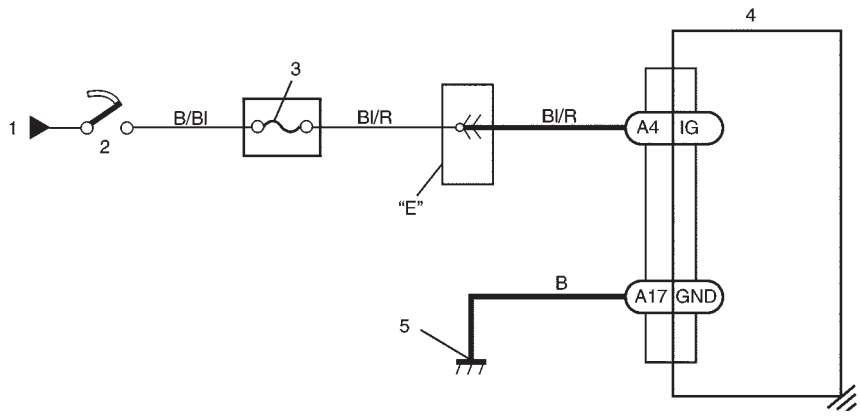

1. From main fuse
2. Ignition switch
3. "AIR BAG" fuse in "AIR BAG" fuse box
4. SDM
5. Ground for air bag system

: Air bag harness

CAUTION:
- **Be sure to perform AIR BAG DIAGNOSTIC SYSTEM CHECK before starting diagnosis according to flow table.**
- **When measurement of resistance or voltage is required in this table, use a tester along with a correct terminal adapter from special tool (Connector test adapter kit).**
- **When a check for proper connection is required, refer to INTERMITTENT AND POOR CONNECTIONS in this section.**
- **If there is open circuit in the air bag wire harness, connector or terminal is found damaged, replace the wire harness, connector and terminal as an assembly.**

DTC WILL SET WHEN:

DTC B1031: The power source voltage to SDM is above specified value for specified time.

DTC B1032: The power source voltage is below an approx. 8 V for specified time.

TABLE TEST DESCRIPTION:

DTC B1031:

STEP 1: Check if voltage applied to SDM is within normal range.

STEP 2: Check if DTC B1031 still exists.

DTC B1032:

STEP 1: Check if voltage applied to SDM is within normal range.

STEP 2: Check if DTC B1032 still exists.

DIAGNOSTIC FLOW TABLE
DTC B1031:

STEP	ACTION	YES	NO
1	1) With ignition switch OFF, disconnect SDM. 2) Check proper connection to SDM at “A4” terminal. 3) If OK then ignition switch ON, and then check voltage from “A4” terminal on SDM harness connector to body ground. 4) Is voltage 14 V or less?	Go to step 2.	Check Charging System and repair as necessary. (Refer to DIAGNOSIS in SECTION 6H)
2	1) With ignition switch OFF, reconnect SDM 2) With ignition switch ON, is DTC 31 current?	Substitute a known-good SDM and recheck.	Check Charging System and repair as necessary. (Refer to DIAGNOSIS in SECTION 6H)

Fig. for STEP 1

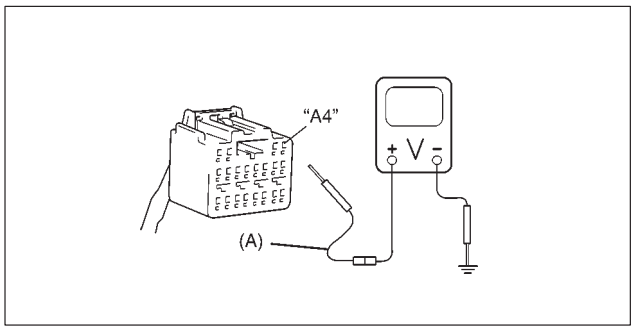

Special Tool
(A): 09932-76010

NOTE:
Upon completion of inspection and repair work, perform following items.
1) Reconnect all air bag system components, ensure all components are properly mounted.
2) Clear diagnostic trouble codes (Refer to “Diagnostic Trouble Code (DTC) Clearance”), if any.
3) Repeat “Air Bag Diagnostic System Check”, referring to p.10B-9 and 10 to confirm that the trouble has been corrected.

DTC B1032:

STEP	ACTION	YES	NO
1	1) Measure voltage on battery. 2) Is voltage 11 V or more?	Go to step 2.	Check Charging System and repair as necessary. (Refer to DIAGNOSIS in SECTION 6H)
2	1) With ignition switch OFF, disconnect SDM. 2) Check proper connection to SDM at “A4” terminal. 3) If OK then ignition switch ON, and then check voltage from “A4” terminal on SDM connector to body ground. 4) Is voltage 8 V or more?	Go to step 4.	Go to step 3.
3	1) With ignition switch OFF, disconnect “E” connector. 2) Check proper connection at “Bl/R” wire terminal in “E” connector. 3) If OK then ignition switch ON, and then check voltage from “Bl/R” wire terminal in “E” connector on instrument panel harness to body ground. 4) Is voltage 8 V or more?	Repair poor connection, high resistance in “Bl/R” or “B/Bl” circuit of air bag harness or “AIR BAG” fuse.	Possibly faulty points are as follows. Check each of them and repair as necessary. ● Circuit from battery to “E” connector ● Charging System (Refer to DIAGNOSIS in SECTION 6H)
4	1) With ignition switch OFF, reconnect SDM 2) With ignition switch ON, is DTC B1032 current?	Substitute a known-good SDM and recheck.	Check Charging System and repair as necessary. (Refer to DIAGNOSIS in SECTION 6H)

Fig. for STEP 2

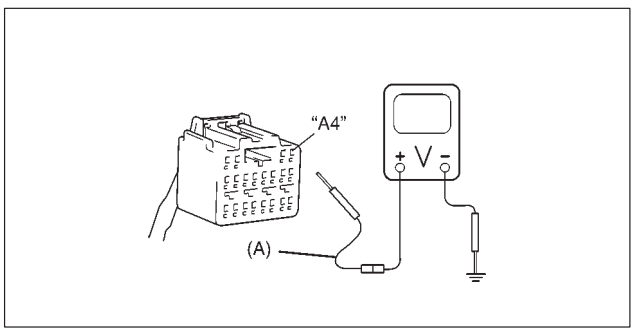

Fig. for STEP 3

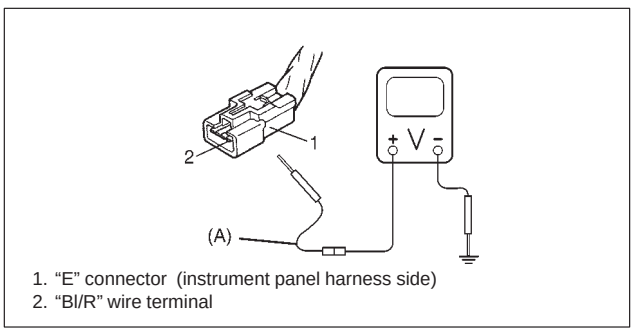

1. “E” connector (instrument panel harness side)
2. “Bl/R” wire terminal

Special Tool
(A): 09932-76010

NOTE:
Upon completion of inspection and repair work, perform following items.
1) Reconnect all air bag system components, ensure all components are properly mounted.
2) Clear diagnostic trouble codes (Refer to DTC CLEARANCE), if any.
3) Repeat AIR BAG DIAGNOSTIC SYSTEM CHECK to confirm that the trouble has been corrected.

DTC B1041 – DRIVER PRETENSIONER INITIATOR CIRCUIT RESISTANCE HIGH
DTC B1042 – DRIVER PRETENSIONER INITIATOR CIRCUIT RESISTANCE LOW
DTC B1043 – DRIVER PRETENSIONER INITIATOR CIRCUIT SHORT TO GROUND
DTC B1044 – DRIVER PRETENSIONER INITIATOR CIRCUIT SHORT TO POWER CIRCUIT
DTC B1045 – PASSENGER PRETENSIONER INITIATOR CIRCUIT RESISTANCE HIGH
DTC B1046 – PASSENGER PRETENSIONER INITIATOR CIRCUIT RESISTANCE LOW
DTC B1047 – PASSENGER PRETENSIONER INITIATOR CIRCUIT SHORT TO GROUND
DTC B1048 – PASSENGER PRETENSIONER INITIATOR CIRCUIT SHORT TO POWER CIRCUIT

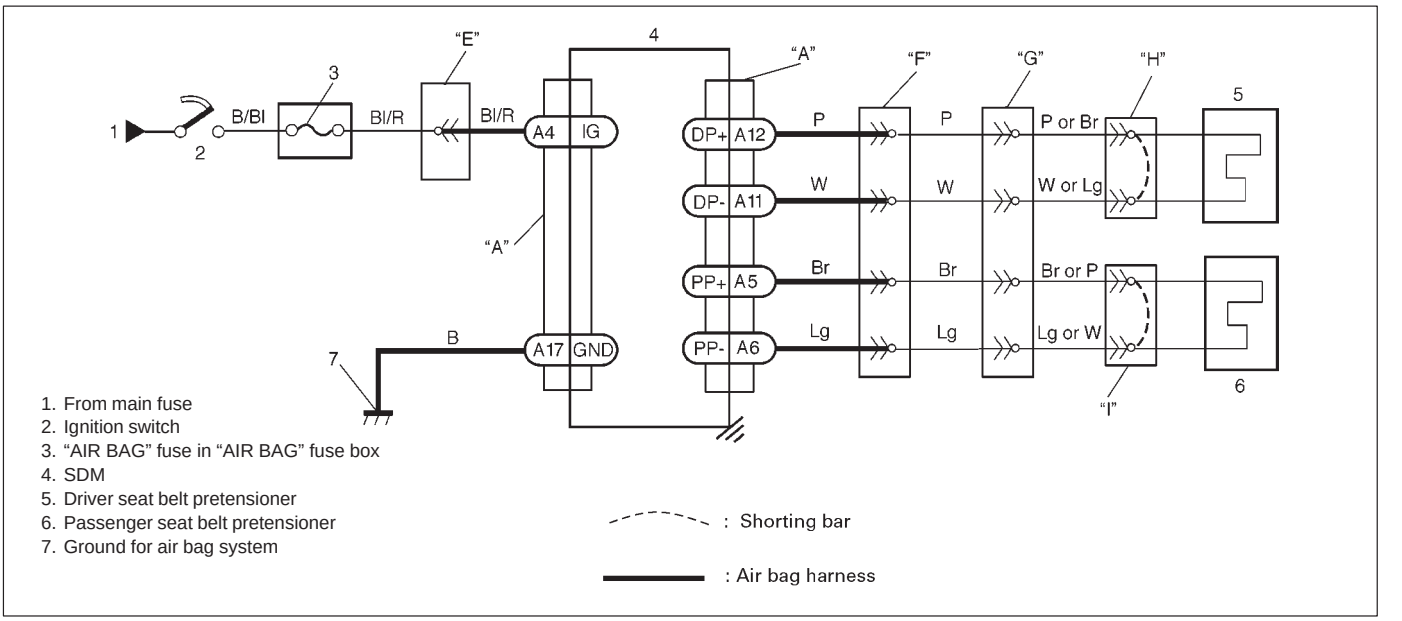

CAUTION:

- **Be sure to perform AIR BAG DIAGNOSTIC SYSTEM CHECK before starting diagnosis according to flow table.**
- **When measurement of resistance or voltage is required in this table, use a tester along with a correct terminal adapter from special tool (Connector test adapter kit).**
- **When a check for proper connection is required, refer to INTERMITTENT AND POOR CONNECTIONS in this section.**
- **If there is open circuit in the air bag wire harness, connector or terminal is found damaged, replace the wire harness, connector and terminal as an assembly.**

DTC WILL SET WHEN:

DTC B1041 and B1045: The resistance of driver or passenger seat belt pretensioner initiator circuit is above a specified value for specified time.

DTC B1042 and B1046: The resistance of driver or passenger seat belt pretensioner initiator circuit is below a specified value for specified time.

DTC B1043 and B1047: The voltage measured at driver or passenger seat belt pretensioner initiator circuit is below a specified value for specified time.

DTC B1044 and B1048: The voltage measured at driver or passenger seat belt pretensioner initiator circuit is above a specified value for specified time.

TABLE TEST DESCRIPTION:

DTC B1041, B1042, B1043, B1044, B1045, B1046, B1047 and B1048:

STEP 1: Check whether malfunction is in seat belt pretensioner.

STEP 2: Check seat belt pretensioner initiator circuit in air bag harness.

DIAGNOSTIC FLOW TABLE
DTC B1041 and B1045:

STEP	ACTION	YES	NO
1	1) With ignition switch OFF, remove center pillar inner garnish of applicable side then disconnect seat belt pretensioner connector. 2) Check proper connection to applicable seat belt pretensioner at terminals in “H” or “I” connector. 3) If OK then connect Special Tool (B) to seat belt pretensioner connector disconnected at the step 1. 4) With ignition switch ON, is DTC B1041 or B1045 still current?	Go to step 2.	1) Ignition switch OFF. 2) Replace seat belt pretensioner (Refer to SECTION 10A).
2	1) With ignition switch OFF, disconnect SDM. 2) Check proper connection to SDM at terminals “A11” and “A12” or “A6” and “A5”. 3) If OK then measure resistance between “A11” and “A12” terminals or “A6” and “A5” terminals with connected Special Tool (B). 4) Is resistance 4.5 Ω or less?	Substitute a known-good SDM and recheck.	**DTC B1041:** Repair high resistance or open in “P” or “W” wire circuit. **DTC B1045:** Repair high resistance or open in “Lg” or “Br” wire circuit.

Fig. for STEP 1 and 2

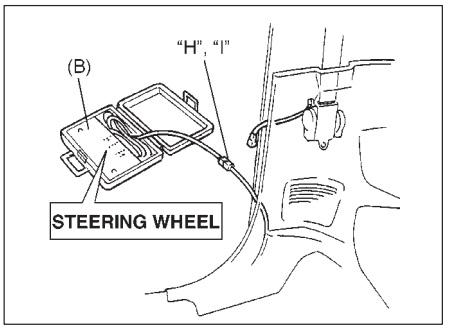

Fig. for STEP 2

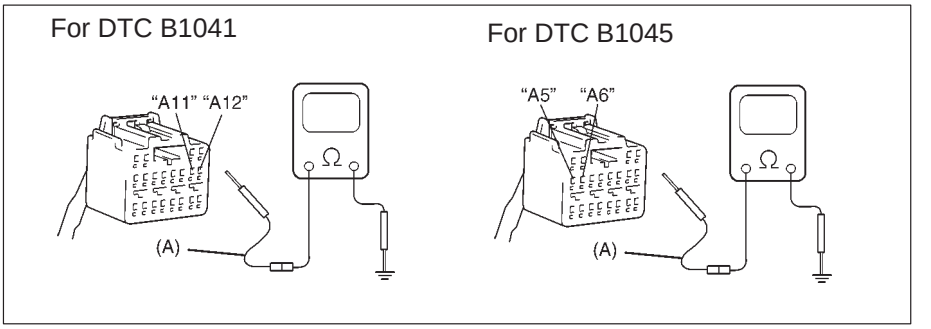

Special Tool
(A): 09932-76010
(B): 09932-75010

NOTE:
Upon completion of inspection and repair work, perform following items.
1) Reconnect all air bag system components, ensure all components are properly mounted.
2) Clear diagnostic trouble codes (Refer to DTC CLEARANCE), if any.
3) Repeat AIR BAG DIAGNOSTIC SYSTEM CHECK to confirm that the trouble has been corrected.

DTC B1042 and B1046:

STEP	ACTION	YES	NO
1	1) With ignition switch OFF, remove center pillar inner garnish of applicable side then disconnect seat belt pretensioner connector. 2) Check proper connection to applicable seat belt pretensioner at terminals in “H” or “I” connector. 3) If OK then connect Special Tool (B) to seat belt pretensioner connector disconnected at the step 1. 4) With ignition switch ON, is DTC B1042 or B1046 still current?	Go to step 2.	1) Ignition switch OFF. 2) Replace seat belt pretensioner (Refer to SECTION 10A).
2	1) With ignition switch OFF, disconnect SDM. 2) Check proper connection to SDM at terminals “A11” and “A12” or “A6” and “A5”. 3) If OK then measure resistance between “A11” and “A12” terminals or “A6” and “A5” terminals with connected Special Tool (B). 4) Is resistance 1.4 Ω or more?	Substitute a known-good SDM and recheck.	**DTC B1042:** Repair short from “P” wire circuit to “W” wire circuit or from “P” or “W” wire circuit to other wire circuit. **DTC B1046:** Repair short from “Lg” wire circuit to “Br” wire circuit or from “Lg” or “Br” wire circuit to other wire circuit.

Fig. for STEP 1 and 2

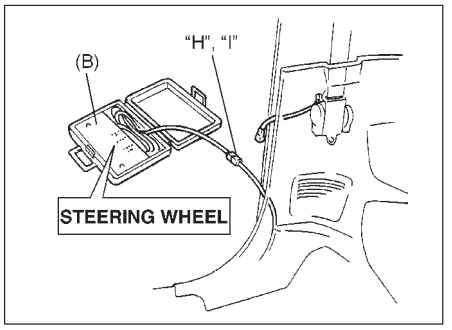

Fig. for STEP 2

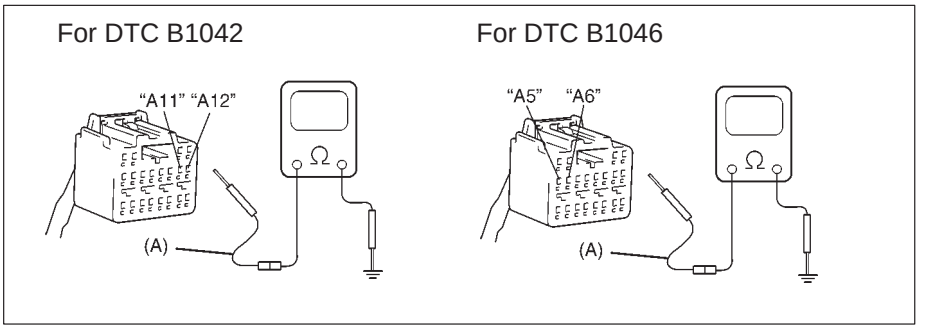

Special Tool
(A): 09932-76010
(B): 09932-75010

NOTE:
Upon completion of inspection and repair work, perform following items.
1) Reconnect all air bag system components, ensure all components are properly mounted.
2) Clear diagnostic trouble codes (Refer to DTC CLEARANCE), if any.
3) Repeat AIR BAG DIAGNOSTIC SYSTEM CHECK to confirm that the trouble has been corrected.

DTC B1043 and B1047:

STEP	ACTION	YES	NO
1	1) With ignition switch OFF, remove center pillar inner garnish of applicable side then disconnect seat belt pretensioner connector. 2) Check proper connection to applicable seat belt pretensioner at terminals in "H" or "I" connector. 3) If OK then connect Special Tool (B) to seat belt pretensioner connector disconnected at the step 1. 4) With ignition switch ON, is DTC B1043 or B1047 still current?	Go to step 2.	1) Ignition switch OFF. 2) Replace seat belt pretensioner (Refer to SECTION 10A).
2	1) With ignition switch OFF, disconnect Special Tool (B) and SDM. 2) Measure resistance between "A11" or "A6" and body ground. 3) Is resistance 10 Ω or more?	Substitute a known-good SDM and recheck.	**DTC B1043:** Repair short "P" or "W" wire circuit to ground. **DTC B1047:** Repair short from "Lg" or "Br" wire circuit to ground.

Fig. for STEP 1 and 2

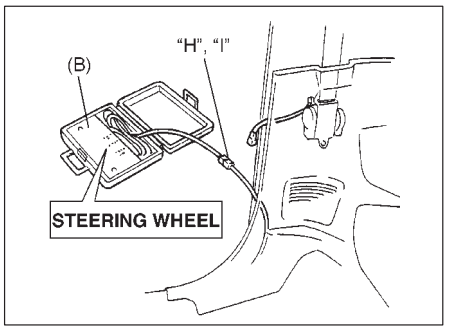

Fig. for STEP 2

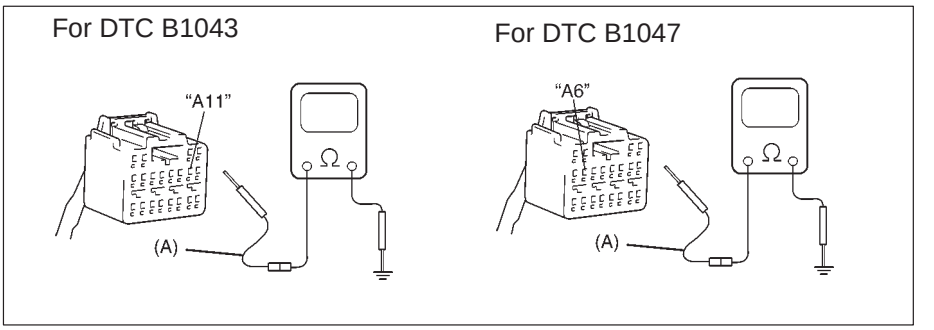

Special Tool
(A): 09932-76010
(B): 09932-75010

NOTE:
Upon completion of inspection and repair work, perform following items.
1) Reconnect all air bag system components, ensure all components are properly mounted.
2) Clear diagnostic trouble codes (Refer to DTC CLEARANCE), if any.
3) Repeat AIR BAG DIAGNOSTIC SYSTEM CHECK to confirm that the trouble has been corrected.

DTC B1044 and B1048:

STEP	ACTION	YES	NO
1	1) With ignition switch OFF, remove center pillar inner garnish of applicable side then disconnect seat belt pretensioner connector. 2) Check proper connection to applicable seat belt pretensioner at terminals in “H” or “I” connector. 3) If OK then connect Special Tool (B) to seat belt pretensioner connector disconnected at the step 1. 4) With ignition switch ON, is DTC B1044 or B1048 still current?	Go to step 2.	1) Ignition switch OFF. 2) Replace seat belt pretensioner (Refer to SECTION 10A).
2	1) With ignition switch OFF, disconnect Special Tool (B) and SDM. 2) Measure voltage from “A12” or “A5” terminal to body ground. 3) With ignition switch ON, is voltage 1 V or less?	Substitute a known-good SDM and recheck.	**DTC B1044:** Repair short “P” or “W” wire circuit to power circuit. **DTC B1048:** Repair short from “Lg” or “Br” wire circuit to power circuit.

Fig. for STEP 1 and 2

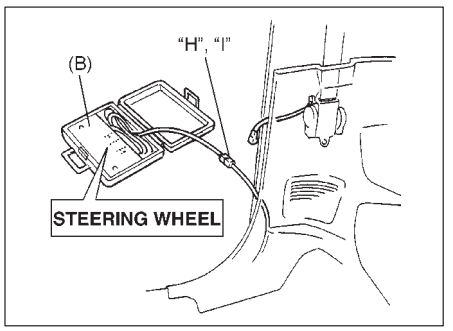

Fig. for STEP 2

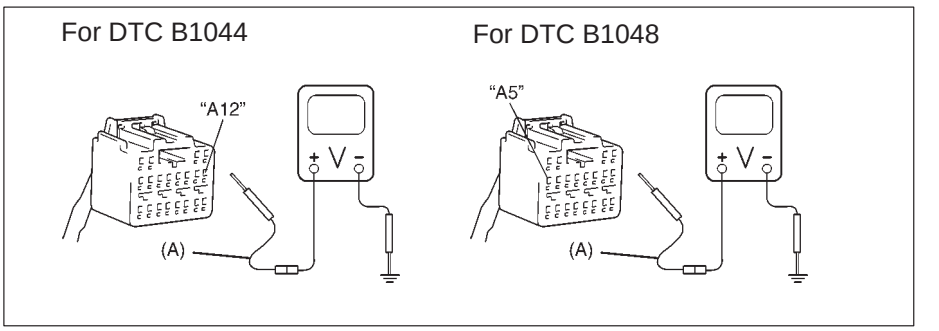

Special Tool
(A): 09932-76010
(B): 09932-75010

NOTE:
Upon completion of inspection and repair work, perform following items.
1) Reconnect all air bag system components, ensure all components are properly mounted.
2) Clear diagnostic trouble codes (Refer to DTC CLEARANCE), if any.
3) Repeat AIR BAG DIAGNOSTIC SYSTEM CHECK to confirm that the trouble has been corrected.

DTC B1051 – FRONTAL CRASH DETECTED (SYSTEM ACTIVATION COMMAND OUTPUTTED)

DTC WILL SET WHEN:

The SDM detects a frontal crash of sufficient force to warrant activation of the air bag system. (SDM outputs a deployment command.)

TABLE TEST DESCRIPTION:

STEP 1: Check that DTC B1051 has been set although air bag has not been deployed.

STEP 2: Check that DTC has been set due to failure of SDM.

NOTE:

Before executing items in this table, be sure to perform AIR BAG DIAGNOSTIC SYSTEM CHECK.

STEP	ACTION	YES	NO
1	1) Ignition switch OFF. 2) Has air bag system deployed?	Replace components and perform inspections as directed in REPAIRS AND INSPECTIONS REQUIRED AFTER AN ACCIDENT in this section.	Go to step 2.
2	1) Inspect front of vehicle and undercarriage for signs of impact. 2) Are there signs of impact?	Replace components and perform inspections as directed in REPAIRS AND INSPECTIONS REQUIRED AFTER AN ACCIDENT in this section.	Substitute a known-good SDM and recheck.

NOTE:

Upon completion of inspection and repair work, perform following items.

1) Reconnect all air bag system components, ensure all components are properly mounted.

2) Repeat AIR BAG DIAGNOSTIC SYSTEM CHECK to confirm that the trouble has been corrected.

DTC B1071 – INTERNAL SDM FAULT

DTC WILL SET WHEN:

An internal SDM fault is detected by SDM.

NOTE:

Before executing items below, be sure to perform AIR BAG DIAGNOSTIC SYSTEM CHECK.

NOTE:

DTC B1071 can never be cleared once it has been set.

1) Ignition switch OFF.
2) Replace SDM.
3) Repeat AIR BAG DIAGNOSTIC SYSTEM CHECK.

DTC B1013 – SYSTEM SPECIFICATIONS DIFFERENT FROM SDM SPECIFICATIONS

DTC WILL SET WHEN:

Specifications of the air bag system differ from those of SDM.

NOTE:

Before executing items below, be sure to perform AIR BAG DIAGNOSTIC SYSTEM CHECK.

1) Ignition switch OFF.
2) Replace SDM.
3) Repeat AIR BAG DIAGNOSTIC SYSTEM CHECK.

SPECIAL TOOLS

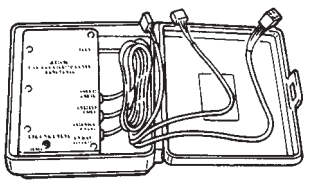

09932-75010
Air bag driver/passenger load tool

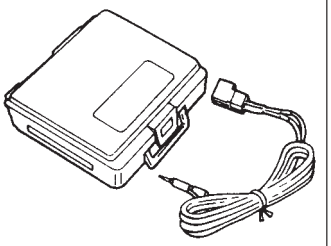

09932-75030
Air bag deployment harness

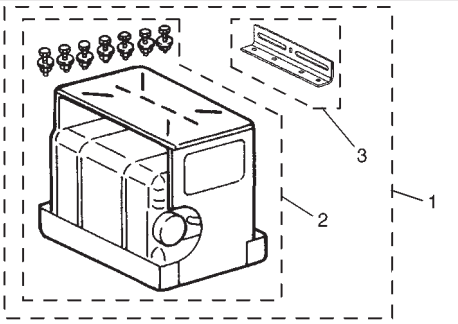

1. 09932-75041 PAB deployment fixture
   or
2. 09932-75040 PAB deployment fixture and
3. 09932-75050 PAB deployment fixture bracket
   PAB : Passenger air bag (inflator) module

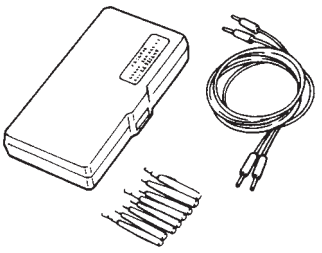

09932-76010
Connector test adapter kit

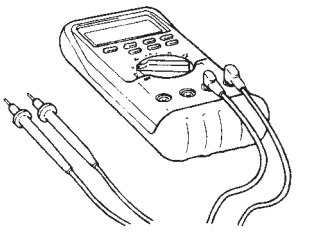

Digital multimeter for which the maximum test current is 10 mA or less at the minimum range of resistance measurement.

WARNING:
Be sure to use the specified digital multimeter. Otherwise, air bag deployment or personal injury may result.

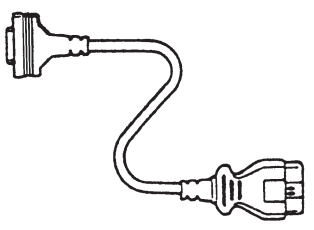

09931-76030
16/14 pin DLC cable

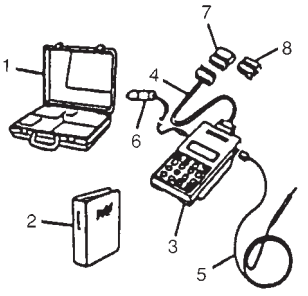

1. Storage case
2. Operator's manual
3. Tech 1A
4. DLC cable
5. Test lead/probe
6. Power source cable
7. DLC cable adapter
8. Self-test adapter

09931-76011
SUZUKI scan tool (Tech 1A) kit

Prepared by

SUZUKI MOTOR CORPORATION

Overseas Service Department

1st Ed. June, 2000
2nd Ed. Mar., 2001

Printed in Japan

Printing: 579