Important

WARNING/CAUTION/NOTE

Please read this manual and follow its instructions carefully. To emphasize special information, the words **WARNING, CAUTION** and **NOTE** have special meanings. Pay special attention to the messages highlighted by these signal words.

WARNING:
Indicates a potential hazard that could result in death or injury.

CAUTION:
Indicates a potential hazard that could result in vehicle damage.

NOTE:
Indicates special information to make maintenance easier or instructions clearer.

WARNING:
This service manual is intended for authorized Suzuki dealers and qualified service technictans only. Inexperienced mechanics or mechanics without the proper tools and equipment may not be able to properly perform the services described in this manual.
Improper repair may result in injury to the mechanic and may render the vehicle unsafe for the driver and passengers.

WARNING:
For vehicles equipped with a Supplemental Restraint (Air Bag) System:

- **Service on and around the air bag system components or wiring must be performed only by an authorized SUZUKI dealer. Refer to "Air Bag System Components and Wiring Location View" under "General Description" in air bag system section in order to confirm whether you are performing service on or near the air bag system components or wiring. Please observe all WARNINGS and "Service Precautions" under "On-Vehicle Service" in air bag system section before performing service on or around the air bag system components or wiring. Failure to follow WARNINGS could result in unintentional activation of the system or could render the system inoperative. Either of these two conditions may result in severe injury.**
- **If the air bag system and another vehicle system both need repair, Suzuki recommends that the air bag system be repaired first, to help avoid unintended air bag system activation.**
- **Do not modify the steering wheel, instrument panel or any other air bag system component (on or around air bag system components or wiring). Modifications can adversely affect air bag system performance and lead to injury.**
- **If the vehicle will be exposed to temperatures over 93°C (200°F) (for example, during a paint baking process), remove the air bag system components (air bag (inflator) modules, forward sensor(s), SDM and/or seat belt pretensioners) beforehand to avoid component damage or unintended activation.**

The circle with a slash in this manual means "Don't do this" or "Don't let this happen".

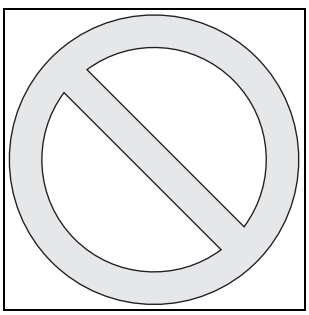

Foreword

This SUPPLEMANTARY SERVICE MANUAL is a supplement to Jimny (SN413/SN415D) SERVICE MANUAL. It has been prepared exclusively for the following applicable model.

Applicable models: Jimny M13 Engine Vehicles (SN413) and Jimny K9K Engine Vehicles (SN415D) with the following vehicle identification numbers (VINs).

M13 engine model

- ⓧ JSAFJB43V#0 200001 ⓧ ~
- ⓧ JSAFJB43V#4 200001 ⓧ ~
- JS3JB43V⍰#4 200001 ~

⍰: Check digit (0 – 9 and X)

K9K engine model

- ⓧ JSAFJB53V00 200001 ⓧ ~

This supplementary service manual describes only different service information of the above applicable model as compared with Jimny (SN413) SERVICE MANUAL. Therefore, whenever servicing the above applicable model, consult this supplement first. And for any section, item or description not found in this supplement, refer to the related service manual below

When replacing parts or servicing by disassembling, it is recommended to use SUZUKI genuine parts, tools and service materials (lubricant, sealants, etc.) as specified in each description.

All information, illustration and specifications contained in this literature are based on the latest product information available at the time of publication approval. And used as the main subject of description is the vehicle of standard specifications among others.
Therefore, note that illustrations may differ from the vehicle being actually serviced.
The right is reserved to make changes at any time without notice.

NOTE:

"SUZUKI Dealers" means Authorized Suzuki Service Workshop (in Europe).

RELATED MANUAL:

Manual Name	Manual No.	M13 engine model	K9K engine model
Jimny (SN413) SERVICE MANUAL	99500-81A10-01E	Applicable	Applicable
Jimny (SN415D) SUPPLEMENTARY SERVICE MANUAL (with K9K engine)	99501-84A00-01E	Not applicable	Applicable
Jimny (SN413/SN415D) WIRING DIAGRAM MANUAL	99512-81A40-015	Applicable	Applicable

SUZUKI MOTOR CORPORATION

© COPYRIGHT SUZUKI MOTOR CORPORATION 2004

TABLE OF CONTENTS

GENERAL INFORMATION	
General Information	0A
Maintenance and Lubrication	0B
HEATING AND AIR CONDITIONING	
Heater and Ventilation	1A
Air Conditioning (Optional)	1B
STEERING, SUSPENSION, WHEELS AND TIRES	
Steering, Suspension, Wheels and Tires	3
Front Wheel Alignment	3A
Steering Gear Box (Manual Type) and Linkage	3B
Power Steering (P/S) System (if equipped)	3B1
Steering Wheel and Column	3C
Front Suspension	3D
Rear Suspension	3E
Wheels and Tires	3F
DRIVE SHAFT AND PROPELLER SHAFT	
Propeller Shafts	4B
BRAKE SYSTEM	
Brakes	5
Antilock Brake System (ABS)	5E
ENGINE	
Engine General Information and Diagnosis (M13 Engine without VVT)	6-1
Engine General Information and Diagnosis (K9K Engine)	6-2
Engine General Information and Diagnosis (M13 Engine with VVT)	6-3
Engine Mechanical (M13 Engine without VVT)	6A1
Engine Mechanical (K9K Engine)	6A2
Engine Mechanical (M13 Engine with VVT)	6A3
Engine Cooling (M13 Engine)	6B
Engine Cooling (K9K Engine)	6B2
Engine Fuel (M13 Engine)	6C
Engine Fuel (K9K Engine)	6C2
Engine and Emission Control System (M13 Engine)	6E
Engine and Emission Control System (K9K Engine)	6E2
Ignition System (Electronic Ignition System)	6F
Cranking System (M13 Engine)	6G
Cranking System (K9K Engine)	6G2
Charging System (M13 Engine)	6H
Charging System (K9K Engine)	6H2
Exhaust System (M13 Engine)	6K
Exhaust System (K9K Engine)	6K2
TRANSMISSION, CLUTCH AND DIFFERENTIAL	
Manual Transmission (M13 Engine Model)	7A
Manual Transmission (K9K Engine Model)	7A2
Automatic Transmission	7B
Clutch (M13 Engine Model)	7C
Clutch (K9K Engine Model)	7C2
Transfer	7D
Front Differential	7E
Rear Differential	7F
ELECTRICAL SYSTEM	
Body Electrical System	8
Immobilizer Control System (M13 Engine Model) (if equipped)	8G
Immobilizer Control System (K9K Engine Model)	8G2
BODY SERVICE	
Body Service	9
RESTRAINT SYSTEM	
Restraint System	10
Air Bag System	10B

0A 0B 1A 1B 3 3A 3B 3B1 3C 3D 3E 3F 4B 5 5E 6-1 6-2 6-3 6A1 6A2 6A3 6B 6B2 6C 6C2

6E 6E2 6F 6G 6G2 6H 6H2 6K 6K2 7A 7A2 7B 7C 7C2 7D 7E 7F 8 8G 8G2 9 10 10B

NOTE:

For the screen toned Section in the above table, refer to the same section of the Service Manuals mentioned in FOREWORD of this manual.

SECTION 0A

GENERAL INFORMATION

NOTE:

For the items with asterisk (*) in the "CONTENTS" below, refer to the same section of the Service Manual mentioned in "FOREWORD" of this Manual.

CONTENTS

How to Use This Manual ..... 0A- *

Precautions 0A-2

Precaution for Vehicles Equipped with a Supplemental Restraint (Air Bag) System 0A-2

Diagnosis 0A-2

Servicing and handling 0A-3

General Precautions 0A-6

Precaution for CAN Communication System 0A-9

Precautions For Catalytic Converter ..... 0A- *

Precautions For Electrical Circuit Service ..... 0A- *

Electrical Circuit Inspection Procedure ..... 0A- *

Open circuit check ..... 0A- *

Short circuit check (wire harness to ground) ..... 0A- *

Intermittent and Poor Connection ..... 0A- *

Precaution For Installing Mobile Communication Equipment ..... 0A- *

Identification Information 0A-10

Body Number ..... 0A- *

Engine Identification Number ..... 0A- *

Transmission Identification Number 0A-10

Warning, Caution and Information Labels 0A-11

Vehicle Lifting Points ..... 0A- *

When Using Frame Contact Hoist ..... 0A- *

When Using Floor Jack ..... 0A- *

Abbreviations May Be Used In This Manual 0A-13

Abbreviations 0A-13

Fasteners Information ..... 0A- *

Metric Fasteners ..... 0A- *

Fastener Strength Identification ..... 0A- *

Standard Tightening Torque ..... 0A- *

Precautions

Precaution for Vehicles Equipped with a Supplemental Restraint (Air Bag) System

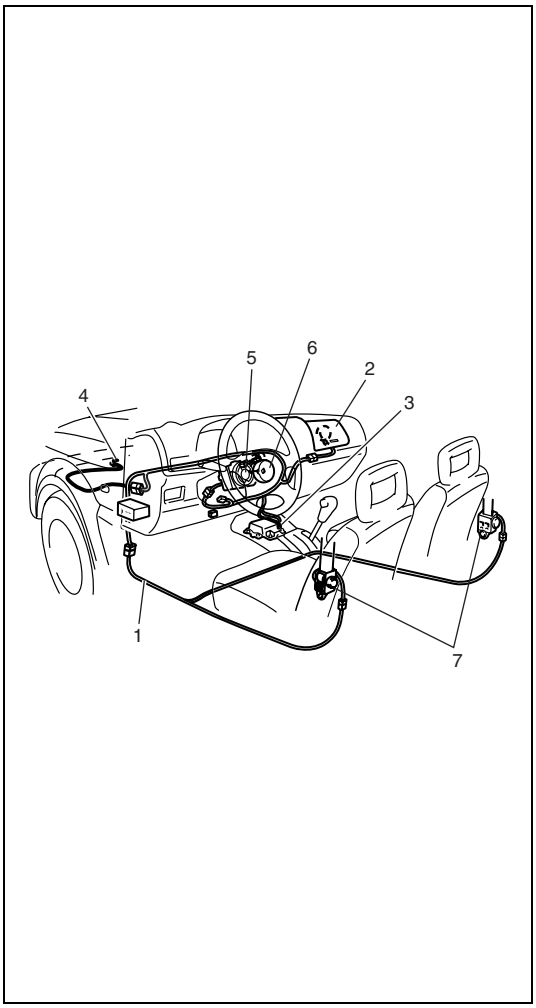

WARNING:

- **The configuration of air bag system parts are as shown in the figure. When it is necessary to service (remove, reinstall and inspect) these parts, be sure to follow procedures described in Section 10B. Failure to follow proper procedures could result in possible air bag system activation, personal injury, damage to parts or air bag system being unable to activate when necessary.**
- **If the air bag system and another vehicle system both need repair, SUZUKI recommends that the air bag system be repaired first, to help avoid unintended air bag system activation.**
- **Do not modify the steering wheel, dashboard, or any other air bag system components. Modifications can adversely affect air bag system performance and lead to injury.**
- **If the vehicle will be exposed to temperatures over 93°C (200°F) (for example, during a paint baking process), remove the air bag system components beforehand to avoid component damage or unintended air bag system activation.**

1. Air bag wire harness (in instrument panel wire harness, floor wire harness and/or main wire harness)	5. Contact coil
2. Passenger air bag (inflator) module	6. Driver air bag (inflator) module
3. SDM	7. Seat belt pretensioner (if equipped)
4. Forward sensor (K9K engine model)	

Diagnosis

- When troubleshooting air bag system, be sure to follow “Air Bag Diagnostic System Check” in Section 10B. Bypassing these procedures may result in extended diagnostic time, incorrect diagnosis, and incorrect parts replacement.
- Never use electrical test equipment other than that specified in this manual.

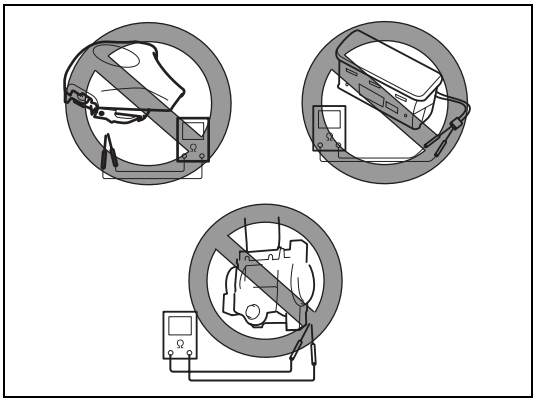

WARNING:

Never attempt to measure the resistance of the air bag (inflator) modules (driver and passenger) and seat belt pretensioners (driver and passenger). It is very dangerous as the electric current from the tester may deploy the air bag or activate the pretensioner.

Servicing and handling

[A]

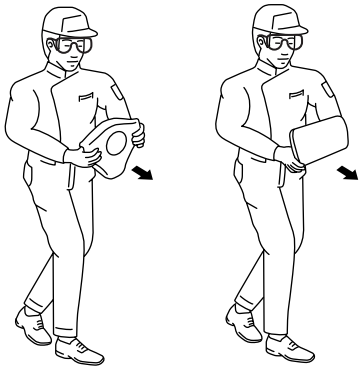

[B]

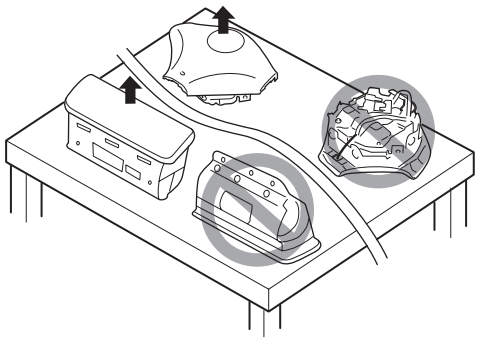

WARNING:

Many of service procedures require disconnection of "Air Bag" fuse and all air bag (inflator) module(s) from initiator circuit to avoid an accidental deployment.

Driver and Passenger Air Bag (Inflator) Modules

- **For handling and storage of a live air bag (inflator) module, select a place where the ambient temperature below 65°C (150°F), without high humidity and away from electric noise.**
- **When carrying a live air bag (inflator) module, make sure the bag opening is pointed away from you. In case of an accidental deployment, the bag will then deploy with minimal chance of injury. Never carry the air bag (inflator) module by the wires or connector on the underside of the module. When placing a live air bag (inflator) module on a bench or other surface, always face the bag up, away from the surface. This is necessary so that a free space is provided to allow the air bag to expand in the unlikely event of accidental deployment. Otherwise, personal injury may result.**
- **Never dispose of live (undeployed) air bag (inflator) modules (driver and passenger). If disposal is necessary, be sure to deploy them according to deployment procedures described in Section 10B before disposal.**
- **The air bag (inflator) module immediately after deployment is very hot. Wait for at least half an hour to cool it off before proceeding the work.**
- **After an air bag (inflator) module has been deployed, the surface of the air bag may contain a powdery residue. This powder consists primarily of cornstarch (used to lubricate the bag as it inflates) and by-products of the chemical reaction. As with many service procedures, gloves and safety glasses should be worn.**

[A]:	Always Carry Air Bag (Inflator) Module With Trim Cover (Air Bag Opening) Away from Body.
[B]:	Always Place Air Bag (Inflator) Module On Workbench With Trim Cover (Air Bag Opening) Up, Away From Loose Objects.

WARNING:

SDM

- **During service procedures, be very careful when handling a Sensing and Diagnostic Module (SDM). Never strike or jar the SDM.**
  Never power up the air bag system when the SDM is not rigidly attached to the vehicle. All SDM and mounting bracket fasteners must be carefully torqued and the arrow must be pointing toward the front of the vehicle to ensure proper operation of the air bag system.
  The SDM could be activated when powered while not rigidly attached to the vehicle which could cause deployment and result in personal injury.

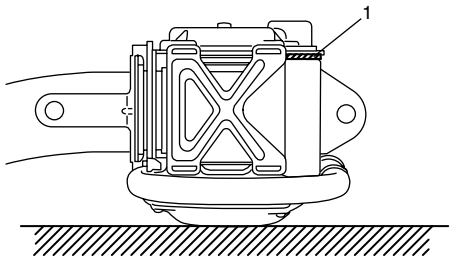

WARNING:

Driver and Passenger Seat Belt Pretensioners (If equipped)

- **For handling and storage of a live seat belt pretensioner, select a place where the ambient temperature below 65°C (150°F), without high humidity and away from electric noise.**
- **Never carry seat belt pretensioner by wire or connector of pretensioner. When placing a live seat belt pretensioner on the workbench or some place like that, be sure not to lay it with its exhaust hole (1) provided side facing down. It is also prohibited to put something on its face with an exhaust hole (1) or to put a seat belt pretensioner on top of another. Otherwise, personal injury may result.**
- **Never dispose of live (inactivated) seat belt pretensioners (driver and passenger). If disposal is necessary, be sure to activate them according to activation procedures described in Section 10B before disposal.**
- **The seat belt pretensioner immediately after activation is very hot. Wait for at least half an hour to cool it off before proceeding the work.**
- **With many service procedures, gloves and safety glasses should be worn to prevent any possible irritation of the skin or eyes.**

CAUTION:

- **Even when the accident was light enough not to cause air bags to activate, be sure to inspect system parts and other related parts according to instructions under "Repair and Inspection Required after an Accident" in Section 10B.**
- **When servicing parts other than air bag system, if shocks may be applied to air bag system component parts, remove those parts beforehand.**
- **When handling the air bag (inflator) modules (driver and passenger), seat belt pretensioners (driver and passenger), forward sensor or SDM, be careful not to drop it or apply an impact to it. If an excessive impact was applied (e.g., dropped from a height of 90 cm (3 feet) or more), never attempt disassembly or repair but replace it with a new one.**
- **When grease, cleaning agent, oil, water, etc. has got onto air bag (inflator) modules (driver and passenger) or seat belt pretensioners (drive and passenger), wipe off immediately with a dry cloth.**
- **Air bag wire harness can be identified easily as it is covered with a yellow protection tube. Be very careful when handling it.**
- **When an open in air bag wire harness, damaged wire harness, connector or terminal is found, replace wire harness, connectors and terminals as an assembly.**
- **Do not apply power to the air bag system unless all components are connected or a diagnostic chart requests it, as this will set a diagnostic trouble code.**
- **Never use air bag system component parts from another vehicle.**
- **When using electric welding, be sure to disconnect air bag (inflator) module connectors (driver and passenger) and seat belt pretensioner connectors (driver and passenger) respectively.**
- **Never expose air bag system component parts directly to hot air (drying or baking the vehicle after painting) or flames.**
- **WARNING / CAUTION labels are attached on each part of air bag system components. Be sure to follow the instructions.**
- **After vehicle is completely repaired, perform "Air Bag Diagnostic System Check" in Section 10B.**

General Precautions

The WARNING and CAUTION below describe some general precautions that you should observe when servicing a vehicle. These general precautions apply to many of the service procedures described in this manual, and they will not necessarily be repeated with each procedure to which they apply.

WARNING:

- **Whenever raising a vehicle for service, be sure to follow the instructions under "Vehicle Lifting Points" in this section.**
- **When it is necessary to do service work with the engine running, make sure that the parking brake is set fully and the transmission is in Neutral (for manual transmission vehicles) or Park (for automatic transmission vehicles), Keep hands, hair, clothing, tools, etc. away from the fan and belts when the engine is running.**
- **When it is necessary to run the engine indoors, make sure that the exhaust gas is forced outdoors.**
- **Do not perform service work in areas where combustible materials can come in contact with a hot exhaust system. When working with toxic or flammable materials (such as gasoline and refrigerant), make sure that the area you work in is well-ventilated.**
- **To avoid getting burned, keep away from hot metal parts such as the radiator, exhaust manifold, tailpipe, muffler, etc.**
- **New and used engine oil can be hazardous. Children and pets may be harmed by swallowing new or used oil. Keep new and used oil and used engine oil filters away from children and pets.**
  Continuous contact with used engine oil has been found to cause [skin] cancer in laboratory animals. Brief contact with used oil may irritate skin. To minimize your exposure to used engine oil, wear a long-sleeve shirt and moisture-proof gloves (such as dish washing gloves) when changing engine oil. If engine oil contacts your skin, wash thoroughly with soap and water. Launder any clothing or rags if wet with oil, recycle or properly dispose of used oil and filters.
- **Be sure to observe following instructions when handling service materials such as fuel, oil, fluid, coolant, grease, sealant, thread lock cement, etc. Otherwise, your health may be ruined.**
  - **Whenever handling any of these service materials, wear safety glasses to protect your eyes. If it gets into your eye, it may cause inflammation.**
  - **Whenever handling any of these service materials, wear moisture-proof gloves to protect your skin. If it adheres to your skin, it may cause inflammation.**
  - **Do not swallow any of these service materials. It would cause diarrhea or nausea.**
  - **Keep all these materials out of children's reach.**
- **Make sure the bonnet is fully closed and latched before driving. If it is not, it can fly up unexpectedly during driving, obstructing your view and resulting in an accident.**

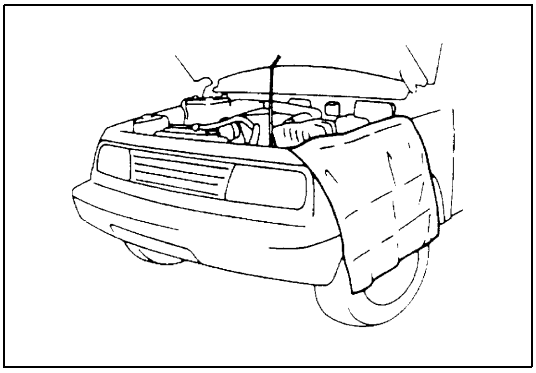

- **Before starting any service work, cover fenders, seats and any other parts that are likely to get scratched or stained during servicing. Also, be aware that what you wear (e.g, buttons) may cause damage to the vehicle's finish.**

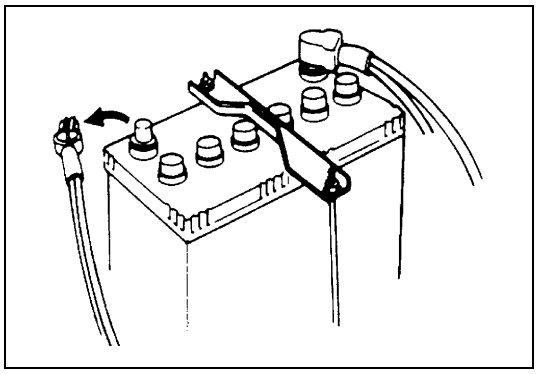

- **When performing service to electrical parts that does not require use of battery power, disconnect the negative cable of the battery.**
- **When disconnecting the battery negative cable, record displayed contents of clock and audio system before disconnecting and reset them as before after connecting.**

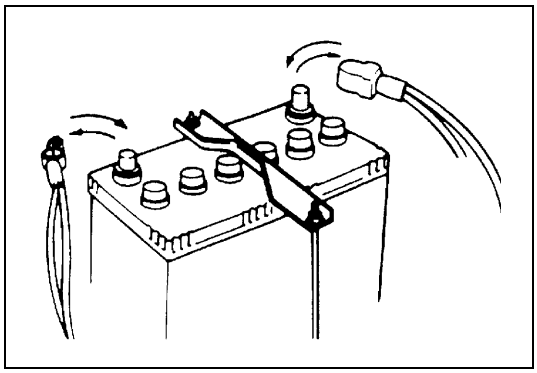

- **When removing the battery, be sure to disconnect the negative cable first and then the positive cable. When reconnecting the battery, connect the positive cable first and then the negative cable, and replace the terminal cover.**

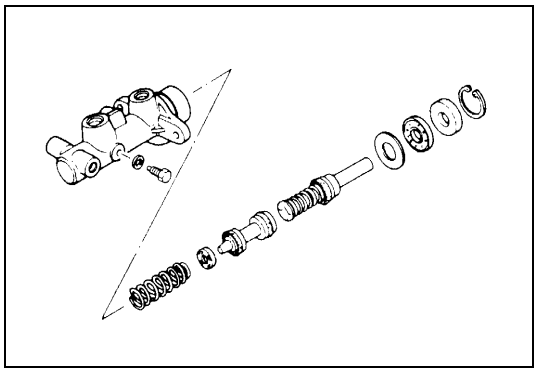

- **When removing parts that are to be reused, be sure to keep them arranged in an orderly manner so that they may be reinstalled in the proper order and position.**

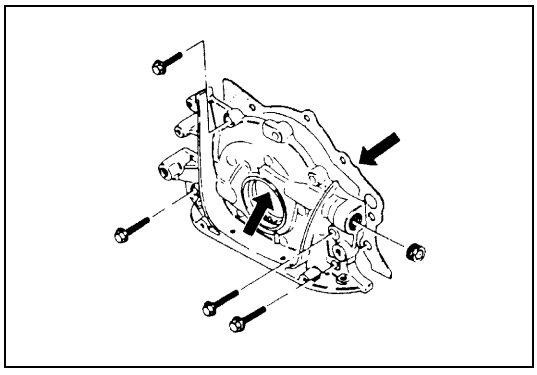

- **Whenever you use oil seals, gaskets, packing, O-rings, locking washers, split pins, self-locking nuts, and certain other parts as specified, be sure to use new ones. Also, before installing new gaskets, packing, etc., be sure to remove any residual material from the mating surfaces.**

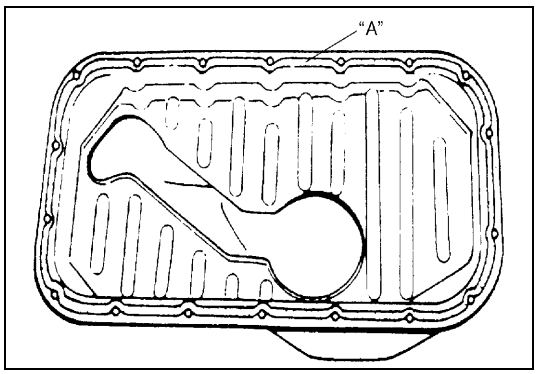

- **Make sure that all parts used in reassembly are perfectly clean.**
- **When use of a certain type of lubricant, bond or sealant is specified, be sure to use the specified type.**

"A": Sealant 99000-31150

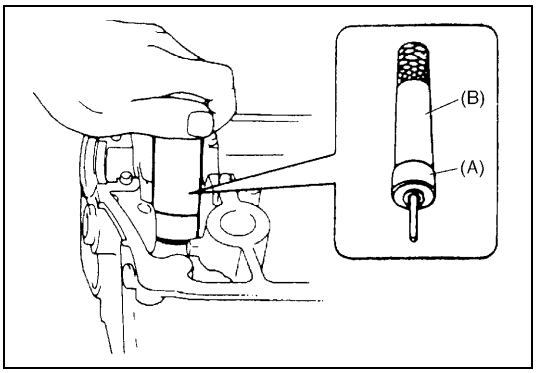

- **Be sure to use special tools when instructed.**

Special tool
(A): 09917-98221
(B): 09916-58210

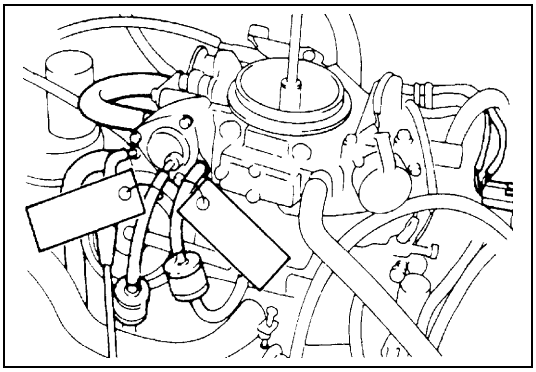

- **When disconnecting vacuum hoses, attach a tag describing the correct installation positions so that the hoses can be reinstalled correctly.**

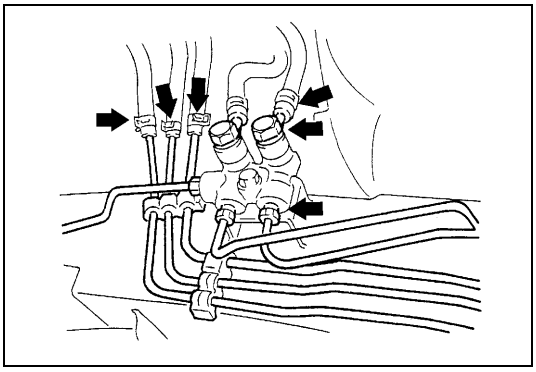

- **After servicing fuel, oil, coolant, vacuum, exhaust or brake systems, check all lines related to the system for leaks.**

- **For vehicles equipped with petrol engine, never disconnect the fuel line between the fuel pump and injector without first releasing the fuel pressure, or fuel can be sprayed out under pressure.**
  Refer to "Fuel Pressure Relief Procedure" in Section 6 for fuel pressure releasing.
- **For vehicles equipped with diesel engine, never disconnect fuel high-pressure line between injection pump and injectors under pressure, or fuel can be sprayed out under pressure.**
  Be sure to confirm that fuel high-pressure line is not under pressure referring to "Fuel pressure relief confirmation procedures" in Section 6E2 before disconnecting.
  If it is under pressure, wait till it is not under pressure.

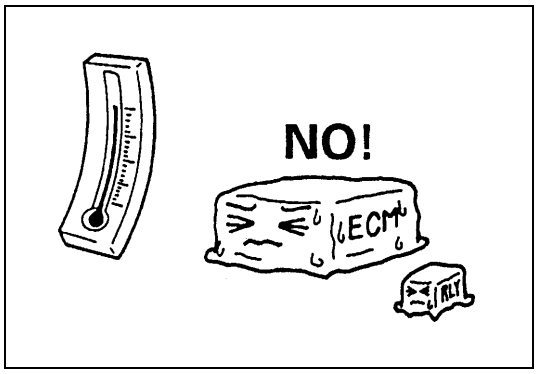

- **When performing a work that produces a heat exceeding 80°C (176°F) in the vicinity of the electrical parts, remove the heat sensitive electrical part(s) beforehand.**

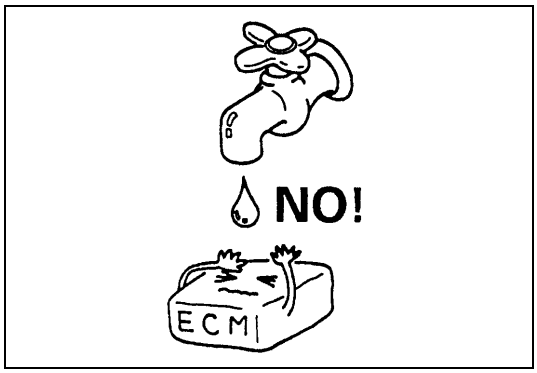

- **Use care not to expose connectors and electrical parts to water which will be a cause of a trouble.**

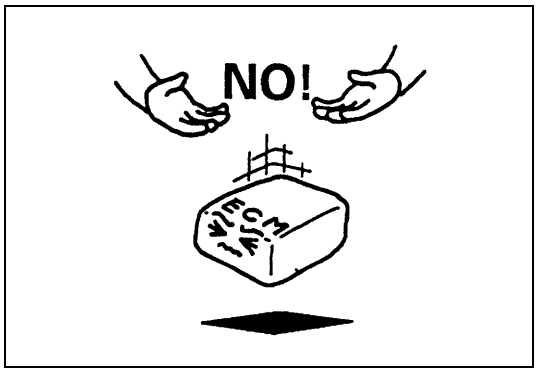

- **Always be careful not to handle electrical parts (computer, relay, etc.) in a rough manner or drop them.**

Precaution for CAN Communication System

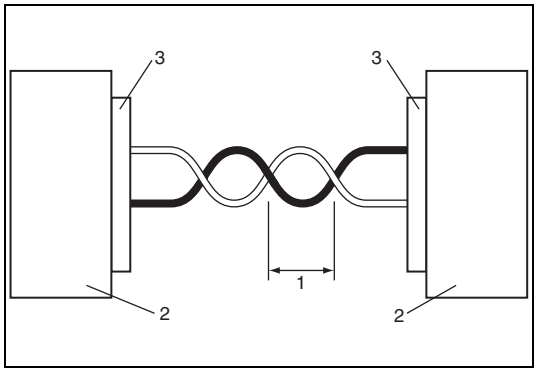

- The loose (1) in the wire harnesses twist of the CAN lines except around the connector (3) should be within 100 mm (3.9 in.) Refer to the wiring diagram for the CAN line discrimination. Excessive loosed lines may be influenced by the electric noise.

2. Controller

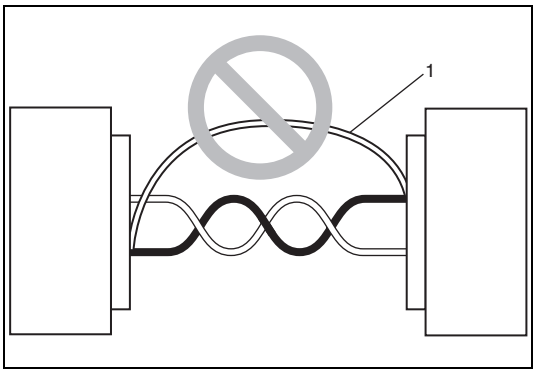

- Do not connect terminals of the CAN line using a bypass wire (1). Otherwise, the CAN line may be influenced by the electric noise.

Identification Information

Transmission Identification Number

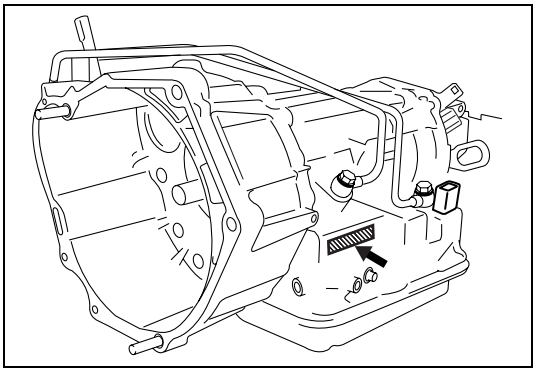

The automatic transmission identification number is located on the transmission case.

Warning, Caution and Information Labels

The figure below shows main labels among others that are attached to vehicle component parts.
When servicing and handling parts, refer to WARNING / CAUTION instructions printed on labels.
If any WARNING / CAUTION label is found stained or damaged, clean or replace it as necessary.

NOTE:

Air bag CAUTION / WARNING labels are attached on the vehicle equipped with air bag system only.

[A]

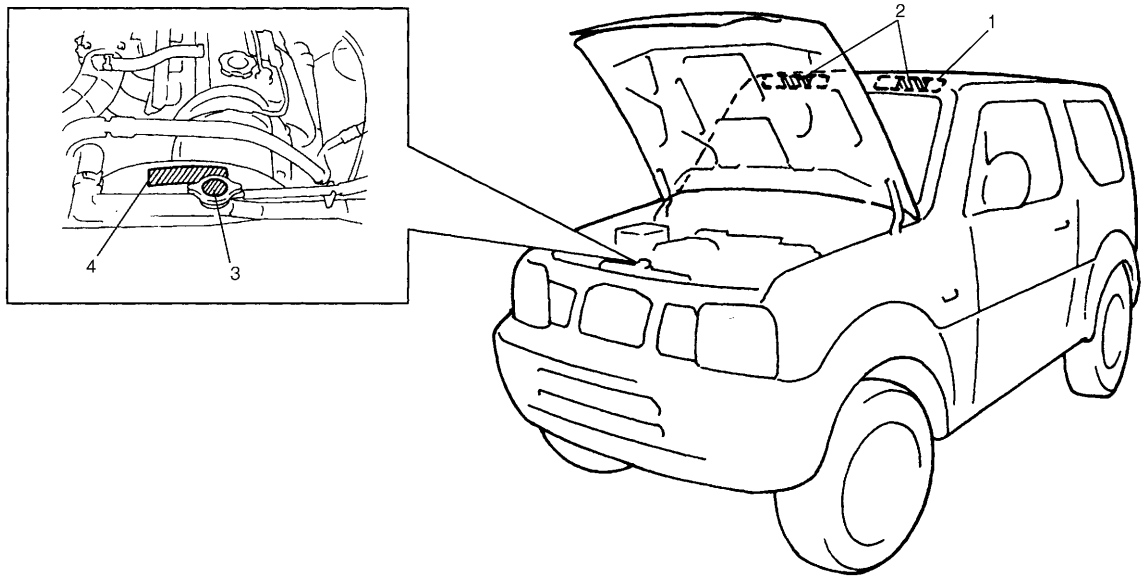

[A] M13 engine model	2. Air bag label on sun visor	4. Engine cooling fan label
1. Transfer label on backside of sun visor	3. Radiator cap label	

[B]

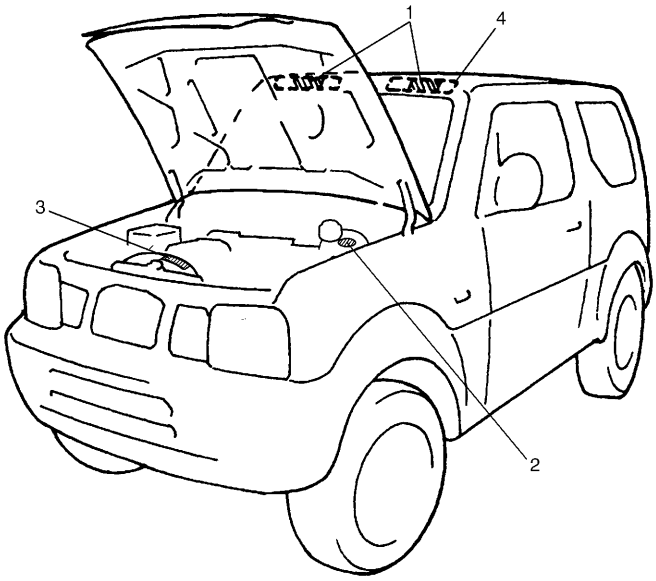

[B] K9K engine model	2. Degassing tank cap label	4. Transfer label on backside of sun visor
1. Air bag label on sun visor	3. Engine cooling fan label	

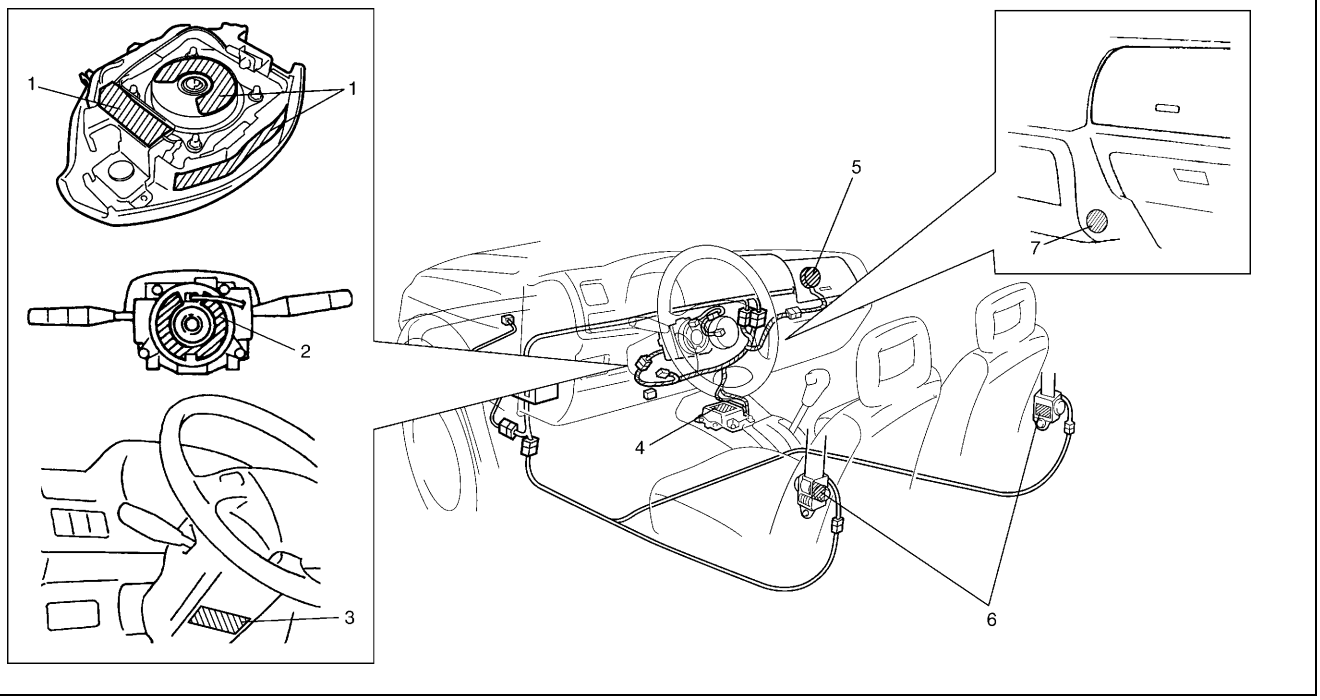

1. Air bag warning label on driver air bag (inflator) module	5. Air bag label on passenger air bag (inflator) module
2. Air bag warning label on contact coil and combination switch assembly	6. Seat belt pretensioner label on retractor
3. Air bag warning label on steering column	7. Child seat label (if equipped)
4. Air bag label on SDM	

Abbreviations May Be Used In This Manual

Abbreviations

A	ABS	Anti-lock Brake System	E	EBCM	Electronic Brake Control Module, ABS Control Module
	ATDC	After Top Dead Center		ECM	Engine Control Module
	API	American Petroleum Institute		ECT Sensor	Engine Coolant Temperature Sensor (Water Temp. Sensor, WTS)
	ATF	Automatic Transmission Fluid		EGR	Exhaust Gas Recirculation
	ALR	Automatic Locking Retractor		EGRT Sensor	EGR Temperature Sensor (Recirculated Exhaust Gas Temp. Sensor, REGTS)
	AC	Alternating Current		EFE Heater	Early Fuel Evaporation Heater (Positive Temperature Coefficient, PTC Heater)
	A/T	Automatic Transmission		ELR	Emergency Locking Retractor
	A/C	Air Conditioning		EPS	Electronic Power Steering
	ABDC	After Bottom Dead Center		EVAP	Evaporative Emission
	A/F	Air Fuel Mixture Ratio		EVAP Canister	Evaporative Emission Canister (Charcoal Canister)
	A-ELR	Automatic-Emergency Locking Retractor	F	4WD	4 Wheel Drive
B	B+	Battery Positive Voltage	G	GEN	Generator
	BTDC	Before Top Dead Center		GND	Ground
	BBDC	Before Bottom Dead Center	H	HC	Hydrocarbons
C	CAN	Controller Area Network		HO2S	Heated Oxygen Sensor
	CKT	Circuit			
	CMP Sensor	Camshaft Position Sensor (Crank Angle Sensor, CAS)			
	CO	Carbon Monoxide			
	CPP Switch	Clutch Pedal Position Switch (Clutch Switch, Clutch Start Switch)			
	CPU	Central Processing Unit			
	CRS	Child Restraint System			
D	DC	Direct Current	I	IAC Valve	Idle Air Control Valve (Idle Speed Control Solenoid Valve, ISC Solenoid Valve)
	DLC	Data Link Connector (Assembly Line Diag. Link, ALDL, Serial Data Link, SDL)		IAT Sensor	Intake Air Temperature Sensor (Air temperature Sensor, ATS)
	DOHC	Double Over Head Camshaft		ICM	Immobilizer Control Module
	DOJ	Double Offset Joint		IG	Ignition
	DRL	Daytime Running Light		ISC Actuator	Idle Speed Control Actuator (Motor)
	DTC	Diagnostic Trouble Code (Diagnostic Code)			

L	LH	Left Hand
	LSPV	Load Sensing Proportioning Valve
M	MAF Sensor	Mass Air Flow Sensor (Air Flow Sensor, AFS, Air Flow Meter, AFM)
	MAP Sensor	Manifold Absolute Pressure Sensor (Pressure Sensor, PS)
	Max	Maximum
	MFI	Multiport Fuel Injection (Multipoint Fuel Injection)
	Min	Minimum
	MIL	Malfunction Indicator Lamp (“CHECK ENGINE” Light)
	M/T	Manual Transmission
N	NOx	Nitrogen Oxides
O	OBD	On-Board Diagnostic System (Self-Diagnosis Function)
	O/D	Overdrive
	OHC	Over Head Camshaft
P	PNP	Park/Neutral Position
	P/S	Power Steering
	PSP Switch	Power Steering Pressure Switch (P/S Pressure Switch)
	PCM	Powertrain Control Module
	PCV	Positive Crankcase Ventilation
R	RH	Right Hand
S	SAE	Society of Automotive Engineers
	SDM	Sensing and Diagnostic Module (Air bag controller, Air bag control module)
	SFI	Sequential Multiport Fuel Injection
	SOHC	Single Over Head Camshaft
T	TBI	Throttle Body Fuel Injection (Single-Point Fuel Injection, SPI)
	TCC	Torque Converter Clutch
	TCM	Transmission Control Module (A/T Controller, A/T Control Module)
	TP Sensor	Throttle Position Sensor
	TVV	Thermal Vacuum Valve (Thermal Vacuum Switching Valve, TVSV, Bimetal Vacuum Switching Valve, BVSV)
	TWC	Three Way Catalytic Converter (Three Way Catalyst)
	2WD	2 Wheel Drive
V	VIN	Vehicle Identification Number
	VSS	Vehicle Speed Sensor
	VVT	Camshaft Position Control (Variable Valve Timing)
W	WU-OC	Warm Up Oxidation Catalytic Converter
	WU-TWC	Warm Up Three Way Catalytic Converter

Symbols

SYMBOL	DEFINITION	SYMBOL	DEFINITION
	Tightening torque		Apply SUZUKI BOND NO. 1216B 99000-31230
	Apply oil (engine, transmission, transfer, differential)		Apply SILICONE SEALANT 99000-31120
	Apply fluid (brake, power steering or automatic transmission fluid)		Apply SEALING COMPOUND 366E 99000-31090
	Apply SUZUKI SUPER GREASE A 99000-25010		
	Apply SUZUKI SUPER GREASE C 99000-25030		Apply THREAD LOCK 1322 99000-32110
	Apply SUZUKI SUPER GREASE E 99000-25050	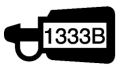	Apply THREAD LOCK 1333B 99000-32020
	Apply SUZUKI SUPER GREASE H 99000-25120	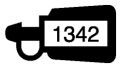	Apply THREAD LOCK 1342 99000-32050
	Apply SUZUKI SUPER GREASE I 99000-25210		
	Apply SUZUKI BOND NO. 1215 99000-31110		Do not reuse
	Apply SUZUKI BOND NO. 1207F 99000-31250		Note on reassembly
	Apply SUZUKI BOND NO. 1217G 99000-31260		

Wire Color Symbols

Symbol		Wire Color	Symbol		Wire Color
B	BLK	Black	O, Or	ORN	Orange
Bl	BLU	Blue	R	RED	Red
Br	BRN	Brown	W	WHT	White
G	GRN	Green	Y	YEL	Yellow
Gr	GRY	Gray	P	PNK	Pink
Lbl	LT BLU	Light blue	V	PPL	Violet
Lg	LT GRN	Light green			

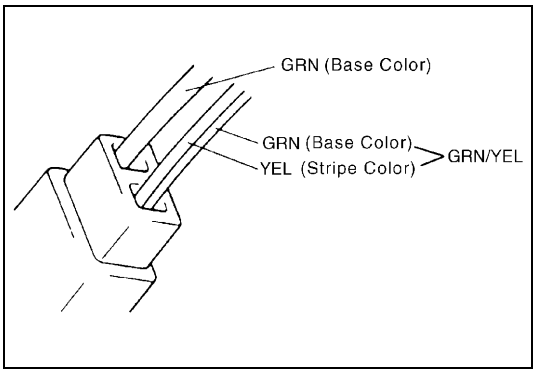

There are two kinds of colored wire used in this vehicle. One is single-colored wire and the other is dual-colored (striped) wire.
The single-colored wire uses only one color symbol (i.e. “GRN”).
The dual-colored wire uses two color symbols (i.e. “GRN/YEL”). The first symbol represents the base color of the wire (“GRN” in the figure) and the second symbol represents the color of the stripe (“YEL” in the figure).

SECTION 0B

MAINTENANCE AND LUBRICATION

WARNING:

For vehicles equipped with a Supplemental Restraint (Air Bag) System:

- **Service on and around the air bag system components or wiring must be performed only by an authorized SUZUKI dealer. Refer to "Air Bag System Components and Wiring Location View" under "General Description" in air bag system section in order to confirm whether you are performing service on or near the air bag system components or wiring. Please observe all WARNINGS and "Service Precautions" under "On-Vehicle Service" in air bag system section before performing service on or around the air bag system components or wiring. Failure to follow WARNINGS could result in unintentional activation of the system or could render the system inoperative. Either of these two conditions may result in severe injury.**
- **Technical service work must be started at least 90 seconds after the ignition switch is turned to the "LOCK" position and the negative cable is disconnected from the battery. Otherwise, the system may be activated by reserve energy in the Sensing and Diagnostic Module (SDM).**

NOTE:

For the items with asterisk (*) in the "CONTENTS" below, refer to the same section of the Service Manual mentioned in "FOREWORD" of this Manual.

CONTENTS

M13 Engine Model
Maintenance Schedule 0B-3
Maintenance Schedule Under Normal Driving Conditions ..... 0B- *
Maintenance Recommended Under Severe Driving Conditions 0B-3
Maintenance Service 0B-5
Engine ..... 0B- *
Drive Belt ..... 0B- *
Valve Lash ..... 0B- *
Engine Oil and Filter ..... 0B- *
Engine Coolant ..... 0B- *
Exhaust System ..... 0B- *
Ignition System ..... 0B- *
Spark Plugs ..... 0B- *
Fuel System ..... 0B- *
Air Cleaner Filter ..... 0B- *
Fuel Lines and Connections ..... 0B- *
Fuel Filter ..... 0B- *
Fuel Tank ..... 0B- *
Emission Control System ..... 0B- *
Crankcase Ventilation Hoses and Connections ..... 0B- *
PCV (Positive Crankcase Ventilation) Valve ..... 0B- *
Fuel Evaporative Emission Control System ..... 0B- *
Chassis and Body 0B-5
Clutch ..... 0B- *
Brake Discs and Pads ..... 0B- *
Brake Drums and Shoes ..... 0B- *
Brake Hoses and Pipes ..... 0B- *
Brake Fluid ..... 0B- *
Parking Brake Lever and Cable ..... 0B- *
Tires/Wheels ..... 0B- *
Suspension System ..... 0B- *
Propeller Shafts ..... 0B- *
Manual Transmission Oil 0B-5
Automatic Transmission Fluid 0B-5
Transfer and Differential Oil 0B-7
Steering System ..... 0B- *
Steering Knuckle Seal ..... 0B- *
Power Steering (P/S) System (if equipped) ..... 0B- *
All Hinges, Latches and Locks ..... 0B- *
Final Inspection ..... 0B- *
Recommended Fluids and Lubricants 0B-7

K9K Engine Model

Maintenance Schedule 0B-3
Maintenance Schedule Under Normal Driving Conditions ..... 0B- *
Maintenance Recommended Under Severe Driving Conditions 0B-3
Maintenance Service 0B-5
Engine ..... 0B- *
Drive Belt ..... 0B- *
Engine Oil and Filter ..... 0B- *
Engine Coolant ..... 0B- *
Exhaust System ..... 0B- *
Fuel System ..... 0B- *
Air Cleaner Filter ..... 0B- *
Fuel Lines and Connections ..... 0B- *
Fuel Filter ..... 0B- *
Water Draining of Fuel Filter ..... 0B- *
Fuel Tank ..... 0B- *
Chassis and Body 0B-5
Clutch ..... 0B- *
Brake Discs and Pads ..... 0B- *
Brake Drums and Shoes ..... 0B- *
Brake Hoses and Pipes ..... 0B- *
Brake Fluid ..... 0B- *
Parking Brake Lever and Cable ..... 0B- *
Tires/Wheels ..... 0B- *
Suspension System ..... 0B- *
Propeller Shafts ..... 0B- *
Manual Transmission Oil 0B-5
Transfer and Differential Oil 0B-7
Steering System ..... 0B- *
Steering Knuckle Seal ..... 0B- *
Power Steering (P/S) System (if equipped) ..... 0B- *
All Hinges, Latches and Locks ..... 0B- *
Final Inspection ..... 0B- *
Recommended Fluids and Lubricants 0B-7

Maintenance Schedule

Maintenance Recommended Under Severe Driving Conditions

If the vehicle is usually used under the conditions corresponding to any severe condition code given below, it is recommended that applicable maintenance operation be performed at the particular interval as shown in the following table.

Severe condition code

A : Repeated short trips
B : Driving on rough and/or muddy roads
C : Driving on dusty roads
D : Driving in extremely cold weather and/or salted roads
E : Repeated short trips in extremely cold weather
F : Leaded fuel use
G : – – – – –
H : Trailer towing (if admitted)

M13 Engine Model:

Severe Condition Code	Maintenance		Maintenance Operation	Maintenance Interval
– B C D – – – –	Drive belt (V-rib belt)		I	Every 15,000 km (9,000 miles) or 12 months
			R	Every 45,000 km (27,000 miles) or 36 months
A – C D E F – H	Engine oil and oil filter		R	Every 7,500 km (4,500 miles) or 6 months
– B – – – – – –	Exhaust pipe mountings		I	Every 15,000 km (9,000 miles) or 12 months
– – C – – – – –	Air cleaner filter ✱1		I	Every 2,500 km (1,500 miles)
			R	Every 30,000 km (18,000 miles) or 24 months
A B C – E F – H	Spark plugs	Nickel spark plug	R	Every 10,000 km (6,000 miles) or 8 months
		Iridium spark plug	R	Every 30,000 km (18,000 miles) or 24 months
– B C D – – – H	Wheel bearing		I	Every 15,000 km (9,000 miles) or 12 months
– B – – – – – –	Suspension bolts and nuts		T	Every 15,000 km (9,000 miles) or 12 months
– B – D E – – H	Propeller shafts		I	Every 15,000 km (9,000 miles) or 12 months
– B – – E – – H	Manual transmission, transfer and differential oil		R	First time only: 15,000 km (9,000 miles) or 12 months
				Second time and after: Every 30,000 km (18,000 miles) or 24 months reckoning from 0 km (0 mile) or 0 month
– B – – E – – H	Automatic transmission fluid		R	Every 30,000 km (18,000 miles) or 24 months
– B C D – – – –	Steering knuckle seal		I	Every 15,000 km (9,000 miles) or 12 months

NOTE:

- **"I": Inspect and correct, replace or lubricate if necessary**
- **"R": Replace or change**
- **"T": Tighten to the specified torque**
- **✱1: Inspect or replace more frequently if necessary**

K9K Engine Model:

Severe Condition Code	Maintenance	Maintenance Operation	Maintenance Interval
– B C D – – – –	Engine accessory drive belt	I	Every 15,000 km (9,000 miles) or 12 months
		R	Every 45,000 km (27,000 miles) or 36 months
A – C D E – – H	Engine oil and oil filter	R	Every 7,500 km (4,500 miles) or 6 months
– B – – – – – –	Exhaust pipe mountings	I	Every 15,000 km (9,000 miles) or 12 months
– – C – – – – –	Air cleaner filter *1	I	Every 2,500 km (1,500 miles)
		R	Every 30,000 km (18,000 miles) or 24 months
– B C D – – – H	Wheel bearing	I	Every 15,000 km (9,000 miles) or 12 months
– B – – – – – –	Suspension bolts and nuts	T	Every 15,000 km (9,000 miles) or 12 months
– B – D E – – H	Propeller shafts	I	Every 15,000 km (9,000 miles) or 12 months
– B – – E – – H	Manual transmission, transfer and differential oil	R	First time only: 15,000 km (9,000 miles) or 12 months
			Second time and after: Every 30,000 km (18,000 miles) or 24 months reckoning from 0 km (0 mile) or 0 month
– B C D – – – –	Steering knuckle seal	I	Every 15,000 km (9,000 miles) or 12 months

NOTE:

- **"I": Inspect and correct, replace or lubricate if necessary**
- **"R": Replace or change**
- **"T": Tighten to the specified torque**
- ***1: Inspect or replace more frequently if necessary**

Maintenance Service

Chassis and Body

Manual Transmission Oil

Inspection

1) Inspect transmission case for evidence of oil leakage. Repair leaky point if any.
2) Make sure that vehicle is placed level for oil level check.

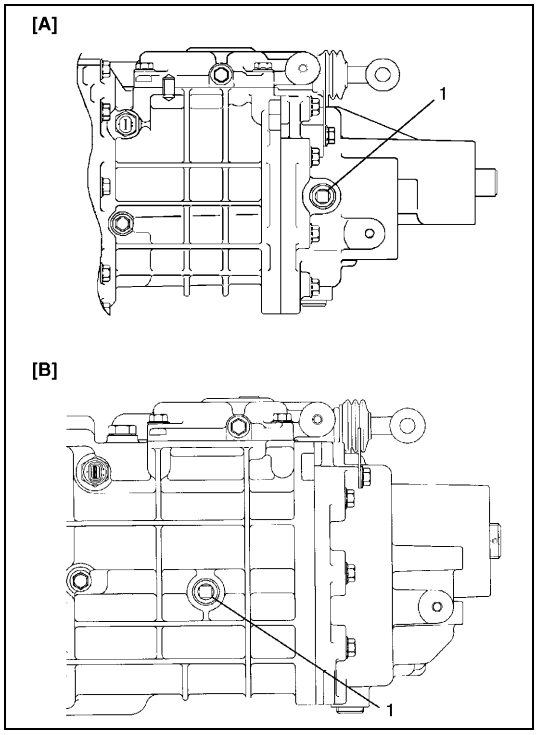

3) Remove level plug (1) of transmission.

[A]: M13 engine model	[B]: K9K engine model

4) Check oil level.
   Oil level can be checked roughly by means of level plug hole. That is, if oil flows out of level plug hole or if oil level is found up to hole when level plug is removed, oil is properly filled.
   If oil is found insufficient, pour specified amount of specified oil.
5) Tighten level plug to specified torque.
   Refer to “Manual Transmission Oil Change” in Section 7A or 7A2 for installation and tightening torque.

Change

Change transmission oil with new specified oil referring to “Manual Transmission Oil Change” in Section 7A or 7A2.

Automatic Transmission Fluid

Inspection

1) Inspect transmission case for evidence of fluid leakage. Repair leaky point, if any.
2) Make sure that vehicle is placed level for fluid level check.

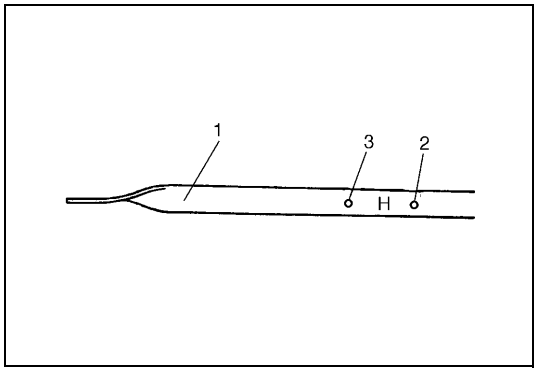

3) Check fluid level.
   For fluid level checking procedure, refer to “Fluid Level Check” in Section 7B and be sure to perform it under specified conditions. If fluid level is low, replenish specified fluid.

1. Dipstick
2. “FULL HOT” mark
3. “LOW HOT” mark

Change

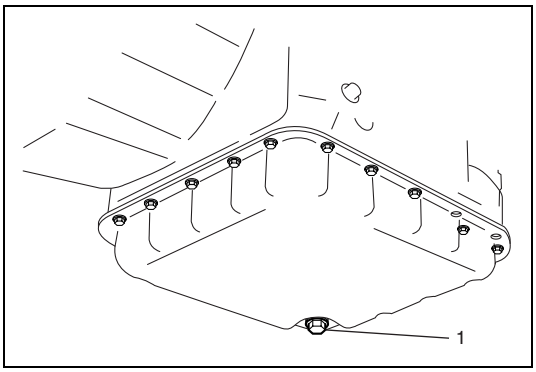

1) Inspect transmission case for evidence of fluid leakage. Repair leaky point, if any.
2) Make sure that vehicle is placed level for fluid level check.
3) Change fluid. For its procedure, refer to “Changing Fluid” in Section 7B.

CAUTION:
Use of specified fluid is absolutely necessary.

1. Drain plug

Fluid Cooler Hose Change

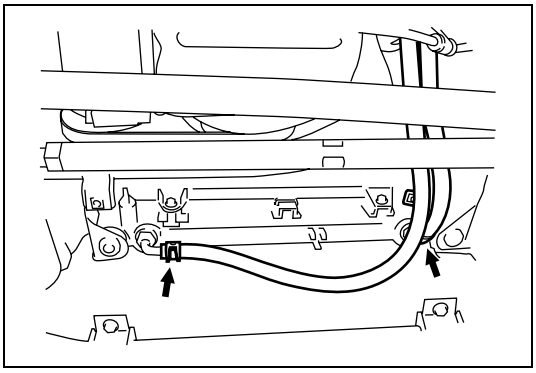

Replace inlet and outlet hoses of cooler hose and their clamps. For replacement procedure, refer to “Oil Cooler Hoses” in Section 7B.

Transfer and Differential Oil

Inspection

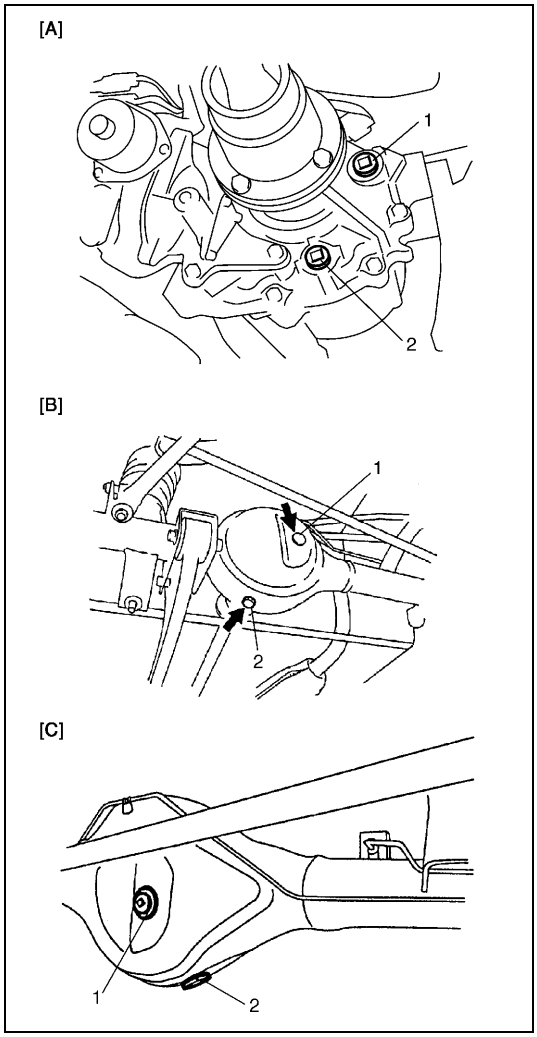

1) Check transfer case and differential for evidence of oil leakage.
   Repair leaky point if any.
2) Make sure that vehicle is placed level for oil level check.
3) Remove level plug (1) of transfer and differentials (front and rear) and check oil level.
   Oil level can be checked roughly by means of level plug hole. That is, if oil flows out of level plug hole or if oil level is found up to hole when level plug is removed, oil is properly filled.
   If oil is found insufficient, pour specified amount of specified oil.

[A] :	Transfer
[B] :	Front differential
[C] :	Rear differential
2.	Drain plug (Apply sealant)

CAUTION:
Hypoid gear oil must be used for differential.

4) Tighten level plug to specified torque.
   Refer to “Oil Change” in Section 7D, 7D2, 7E or 7F for tightening torque.

Change

Change transfer oil and differentials oil with new specified oil referring to “Oil Change” in Section 7D, 7D2, 7E or 7F.

Recommended Fluids and Lubricants

Engine oil	Refer to “Engine Oil and Oil Filter” in this section for engine oil viscosity.
Engine coolant (Ethylene glycol base coolant)	“Antifreeze/Anticorrosion coolant”
Brake fluid	DOT 3
Manual transmission oil	Refer to “Manual Transmission Oil Change” in Section 7A or 7A2.
Transfer oil	Refer to “Oil Change” in Section 7D or 7D2.
Differential oil (front & rear)	Refer to “Oil Change” in Section 7E and 7F.
Automatic transmission fluid	An equivalent of DEXRON®-III
Power steering fluid	An equivalent of DEXRON®-II, DEXRON®-IIE or DEXRON®-III
Clutch linkage pivot points	Water resistance chassis grease (SUZUKI SUPER GREASE A 99000-25010)
Steering knuckle seal	
Door hinges	Engine oil or water resistance chassis grease
Hood latch assembly	
Key lock cylinder	Spray lubricant

SECTION 1A

HEATER AND VENTILATION

WARNING:

For vehicles equipped with a Supplement Restraint (Air Bag) System

- **Service on and around the air bag system components or wiring must be performed only by an authorized SUZUKI dealer. Refer to "Air Bag System Components and Wiring Location View" under "General Description" in Section 10B in order to confirm whether you are performing service on or near the air bag system components or wiring. Please observe all WARNINGS and "Service Precautions" under "On-Vehicle Service" in Section 10B before performing service on or around the air bag system components or wiring. Failure to follow WARNINGS could result in unintentional activation of the system or could render the system inoperative. Either or these two conditions may result in severe injury.**
- **Technical service work must be started at least 90 seconds after the ignition switch is turned to the "LOCK" position and the negative cable is disconnected from the battery. Otherwise, the system may be activated by reserve energy in the Sensing and Diagnostic Module (SDM).**

NOTE:

For the items with asterisk (*) the "CONTENTS" below, refer to the same section of the Service Manual mentioned in "FOREWORD" of this manual.

CONTENTS

General Description 1A-2
Additional Heater Assembly ..... 1A- *
Diagnosis 1A-3
Diagnosis Table ..... 1A- *
Wiring Circuit 1A-3
M13 engine model 1A-3
K9K engine model 1A-4
On Vehicle Service 1A-5
Heater Blower Motor ..... 1A- *
Heater Blower Resistor 1A-5
Heater Control Lever Assembly 1A-5
Heater Blower Fan Switch 1A-8
Heater Unit/Boost Ventilation ..... 1A- *
Additional Heater Assembly ..... 1A- *
Additional Heater Relays ..... 1A- *
Ventilation Louver 1A-8
Center ventilation louver 1A-8
Side ventilation louver 1A-9

General Description

The heater, an in and out air selectable-type hot water heater, is so constructed that it is possible to assure an agreeable ventilation at all times by providing the ventilator air outlets at the center and both sides (right and left) of the instrument panel, the hot air outlet at a place close to the feet of front passengers, and the defroster air outlets at places, right and left, along the windshield glass.
The heater and ventilation consist of following parts.

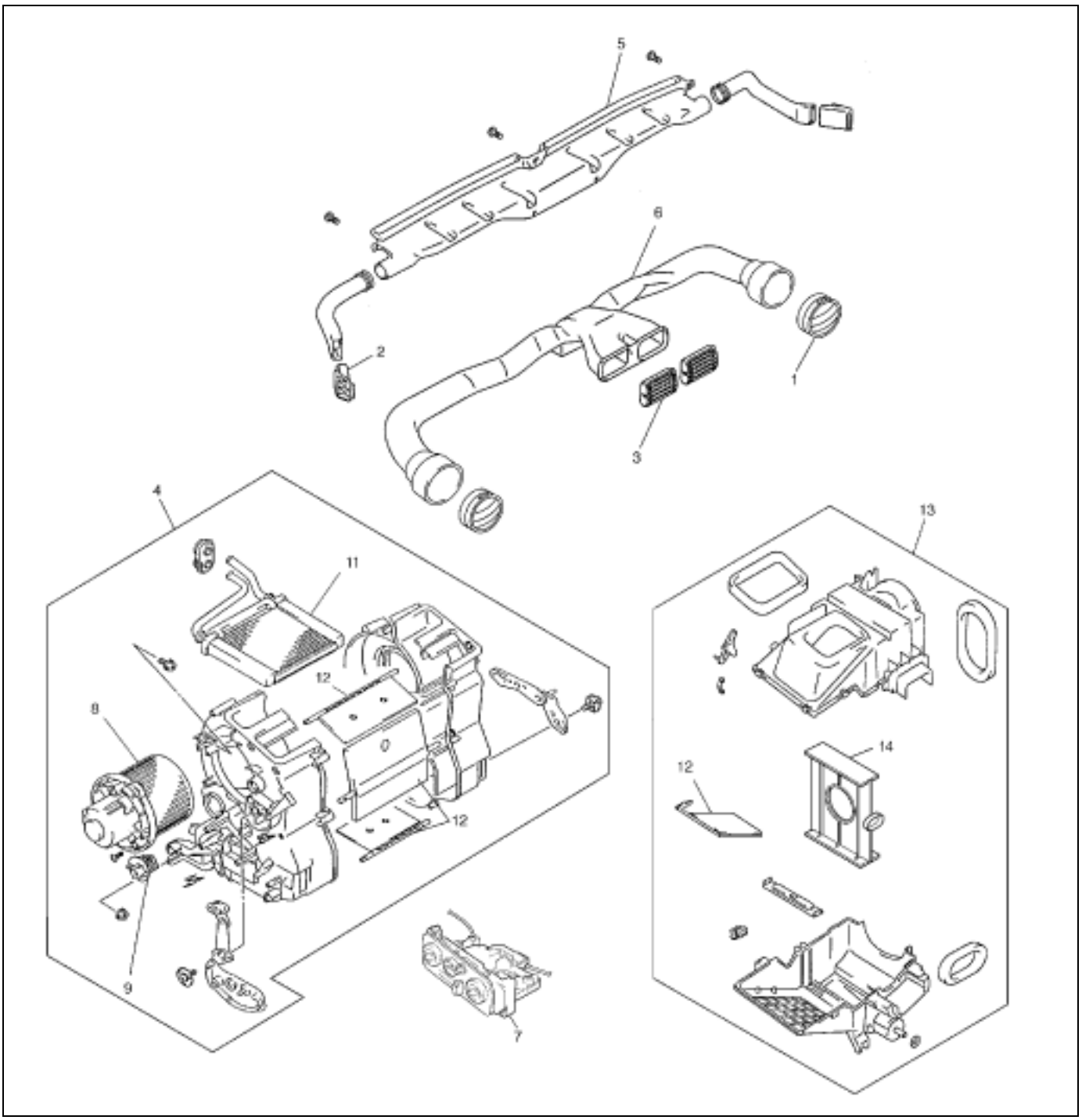

1. Side ventilator outlet	8. Heater blower motor
2. Side defroster outlet	9. Heater blower motor resistor
3. Center ventilator outlet	10. Heater core
4. Heater unit	11. Damper
5. Defroster duct	12. Air inlet box
6. Ventilator duct	13. Air resistance board
7. Heater control lever assembly	

Diagnosis

Wiring Circuit

M13 engine model

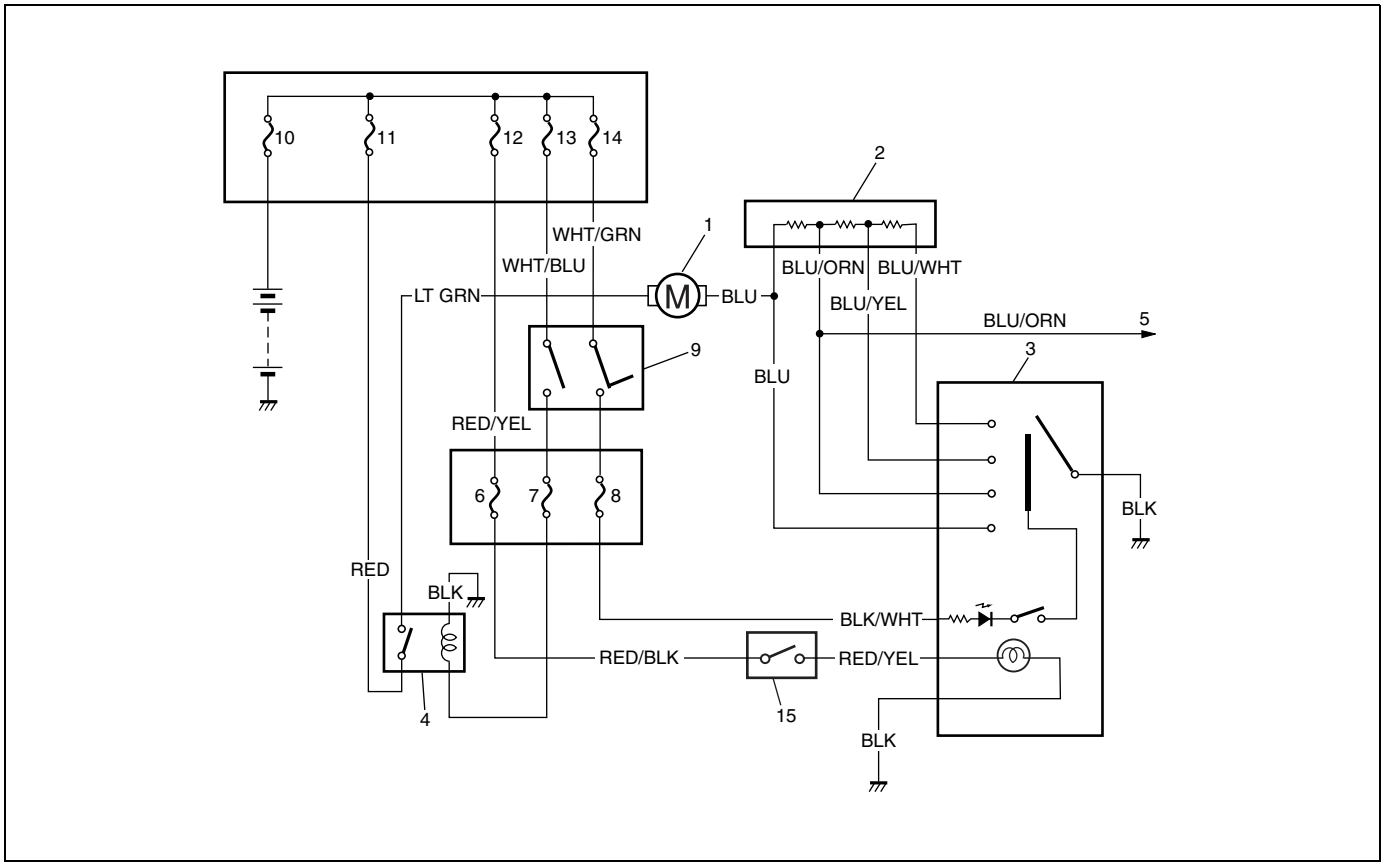

1. Heater blower motor	6. “SMALL” fuse	11. Fuse
2. Heater blower motor resistor	7. “IGN2 SIG” fuse	12. Fuse
3. Heater control lever assembly	8. “IG” fuse	13. Fuse
4. Heater blower motor relay	9. Ignition switch	14. Fuse
5. To ECM	10. Fuse	15. Lighting switch

K9K engine model

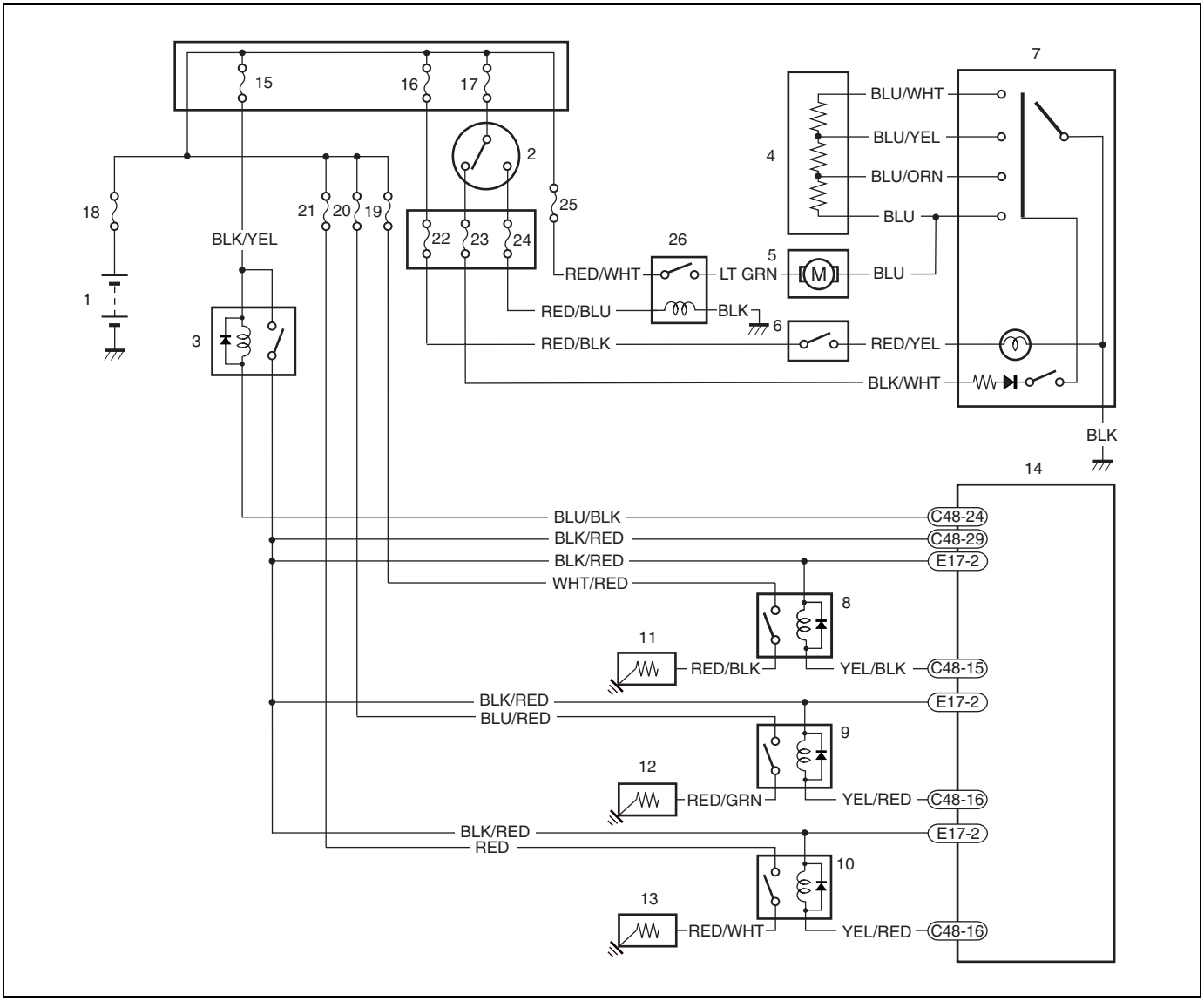

1. Battery	10. Additional heater relay No.3	19. “ADDITIONAL HEATER No.1” fuse
2. Ignition switch	11. Additional heater No.1	20. “ADDITIONAL HEATER No.2” fuse
3. Main relay	12. Additional heater No.2	21. “ADDITIONAL HEATER No.3” fuse
4. Heater blower resistor	13. Additional heater No.3	22. “TAIL” fuse
5. Heater blower motor	14. ECM	23. “IG” fuse
6. Lighting switch	15. Fuse	24. “IG2 SIG” fuse
7. Heater control lever assembly	16. Fuse	25. “HEATER” fuse
8. Additional heater relay No.1	17. Fuse	26. Heater blower motor relay
9. Additional heater relay No.2	18. “MAIN” fuse	

On Vehicle Service

Heater Blower Resistor

Removal

1) Disconnect negative (–) cable at battery.
2) Disable air bag system (if equipped) referring to “Disabling Air Bag System” in Section 10B.
3) Disconnect heater blower resistor coupler.
4) Remove heater blower resistor (3) as shown figure.

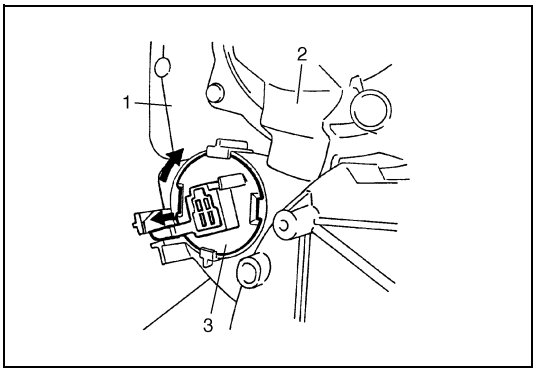

1.	Heater unit
2.	Heater blower motor

Inspection

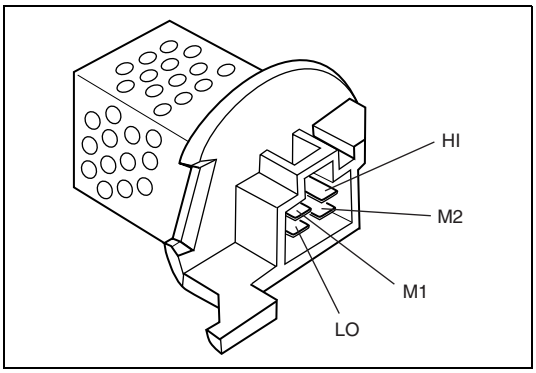

Measure each terminal-to-terminal resistance on heater blower resistor.
If measured resistance is incorrect, replace heater blower resistor.

Heater blower resistor resistance at 20 °C (68 °F)

HI-LO	Approx. 3.1 Ω
HI-M1	Approx. 1.3 Ω
HI-M2	Approx. 0.5 Ω

Installation

1) Reverse removal procedure for installation.
2) Enable air bag system (if equipped) referring to “Enabling Air Bag System” in Section 10B.

Heater Control Lever Assembly

Removal

1) Disconnect negative (–) cable at battery.
2) Disable air bag system (if equipped) referring to “Disabling Air Bag System” in Section 10B.
3) Remove center garnish (1) and then disconnect hazard switch connector and cigarlet lighter connector from the garnish.

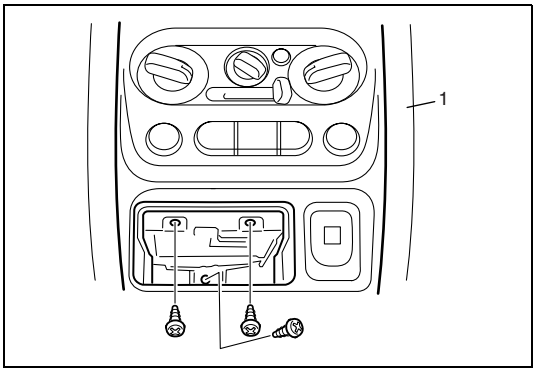

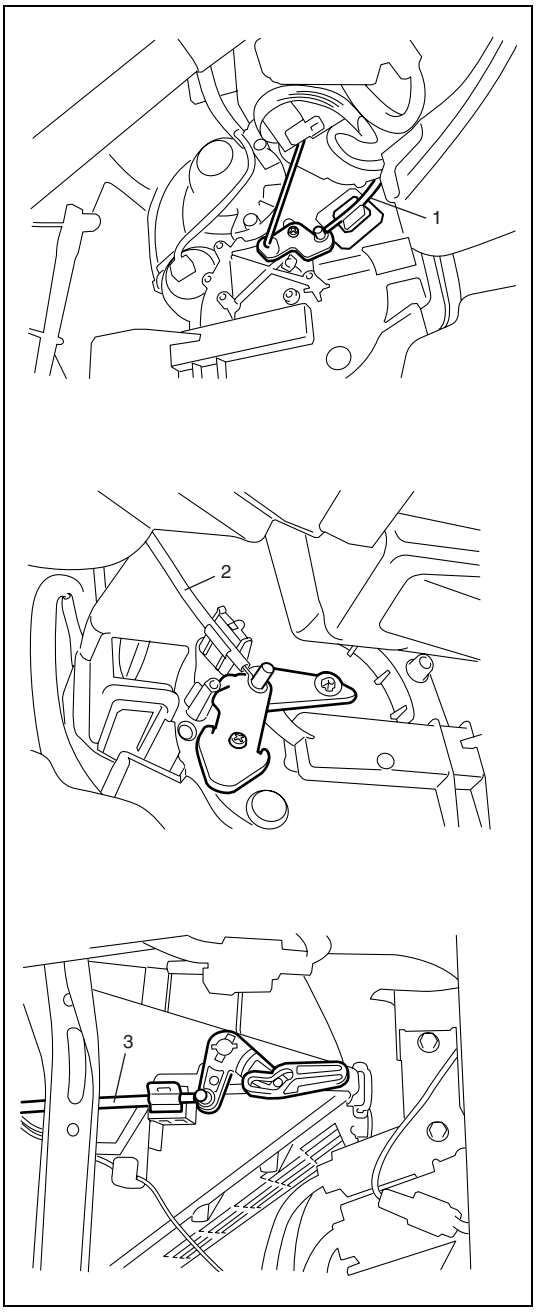

4) Disconnect heater control cables (airflow control (1), temperature control (2) and air intake control (3)) from heater unit and air inlet box.

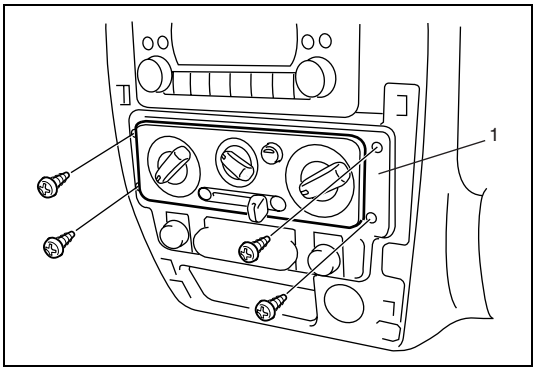

5) Remove mounting screws and then disconnect A/C switch connector and blower fan switch connector from heater control lever assembly (1).
6) Remove heater control lever assembly (1).

Installation

1) Reverse removal procedure for installation.

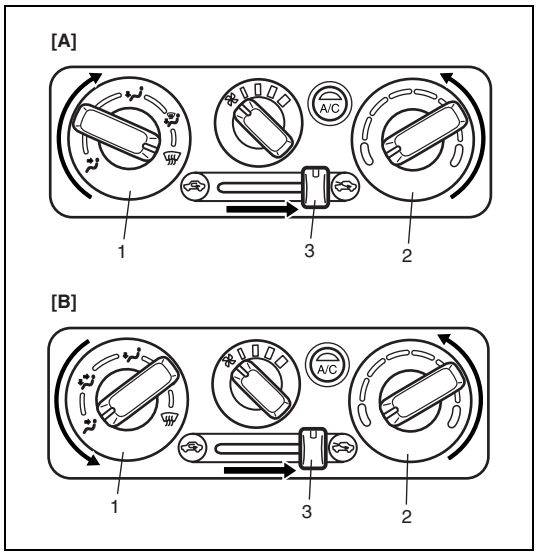

2) Adjust cables as follows.
   a) Move airflow selector (1), temperature selector (2) and air intake selector (3) fully in arrow direction as shown in figure.

[A]: LH steering vehicle
[B]: RH steering vehicle

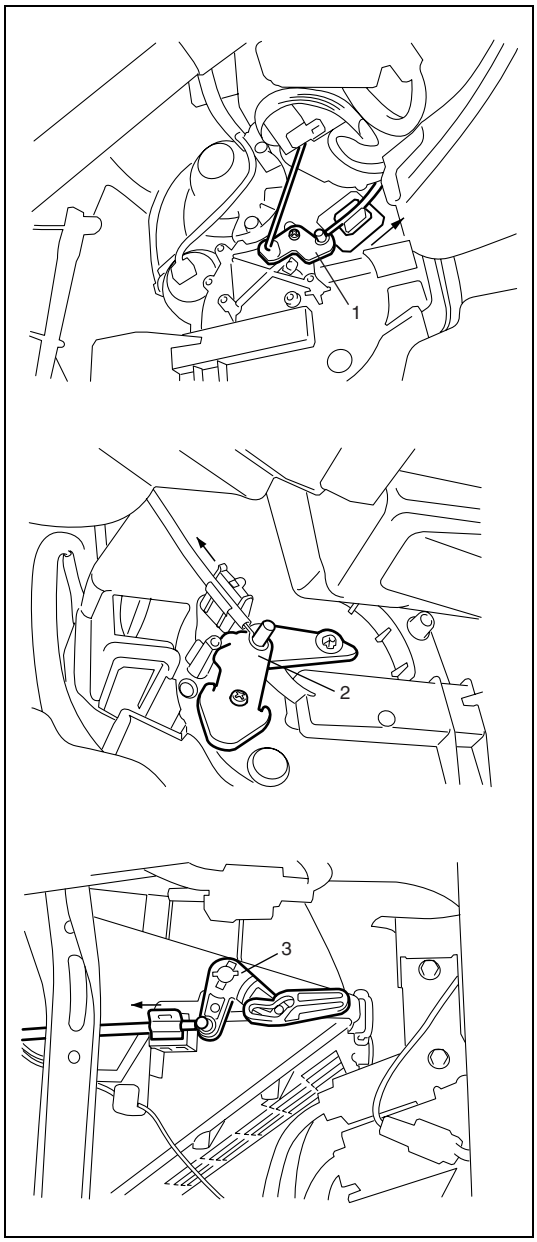

   b) Push airflow control lever (1), temperature control lever (2) and door link (3) fully in arrow direction, respectively, and fix each cable to the clamp with pulling outer cable in arrow direction as shown in figure.

NOTE:

After installing control cables, make sure that control levers move smoothly and stop at proper position.

3) If equipped with air bag, enable air bag system referring to "Enabling Air Bag System" in Section 10B.

Heater Blower Fan Switch

Inspection

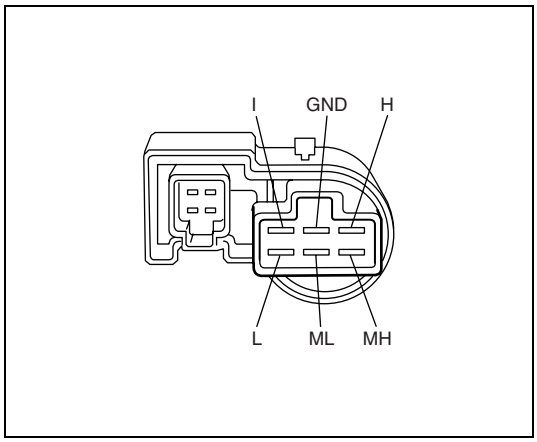

Check heater blower fan switch for each terminal-to-terminal continuity.

TERMINAL / POSITION	GND	I	L	ML	MH	H
OFF	O					
1	O	O	O			
2	O	O		O		
3	O	O			O	
4	O	O				O

Ventilation Louver

Center ventilation louver

Removal

1) Remove center garnish from instrument panel referring to “Heater Control Lever Assembly” in this section.
2) Remove ventilation louver (1) as shown in figures.

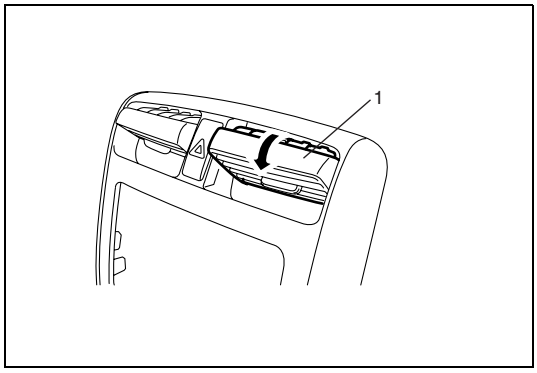

a) Face down louver (1) as shown in figure.

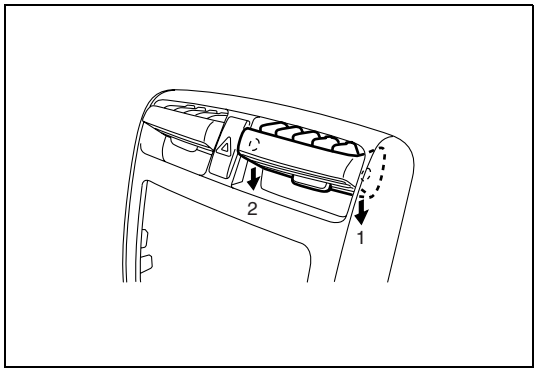

b) Slide down the outer side of the louver (1) from the boss first and then the center side of the louver (2) from the boss.

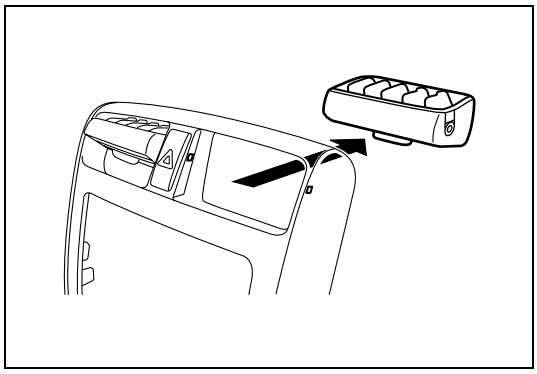

c) Remove the louver from backside of the garnish.

Installation

Reverse removal procedure for installation.

Side ventilation louver

Removal

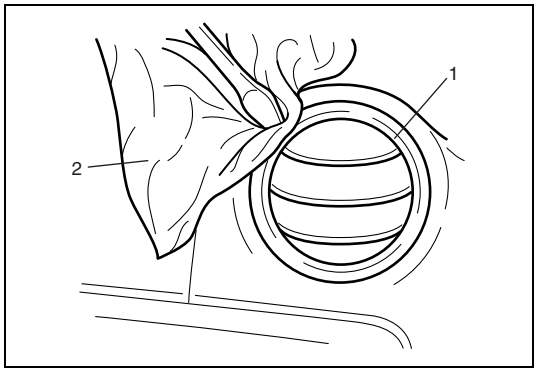

1) Remove side ventilation louver (1) as shown.

2. Rag

Installation

Reverse removal procedure to install side ventilation louver.

SECTION 1B

AIR CONDITIONING (OPTIONAL)

WARNING:

For vehicles equipped with a Supplemental Restraint (Air Bag) System:

- **Service on and around the air bag system components or wiring must be performed only by an authorized SUZUKI dealer. Refer to "Air Bag System Components and Wiring Location View" under "General Description" in air bag system section in order to confirm whether you are performing service on or near the air bag system components or wiring. Please observe all WARNINGS and "Service Precautions" under "On-Vehicle Service" in air bag system section before performing service on or around the air bag system components or wiring. Failure to follow WARNINGS could result in unintentional activation of the system or could render the system inoperative. Either of these two conditions may result in severe injury.**
- **Technical service work must be started at least 90 seconds after the ignition switch is turned to the "LOCK" position and the negative cable is disconnected from the battery. Otherwise, the system may be activated by reserve energy in the Sensing and Diagnostic Module (SDM).**

CAUTION:

The air conditioning system of this vehicle uses refrigerant HFC-134a (R-134a).
None of refrigerant, compressor oil and component parts is interchangeable between two types of A/C: one using refrigerant HFC-134a (R-134a) and the other using refrigerant CFC-12 (R-12).
Be sure to check which refrigerant is used before any service work including inspection and maintenance. For identification between these two types, refer to "Refrigerant Type" in this section.
When replenishing or changing refrigerant and compressor oil and when replacing parts, make sure that the material or the part to be used is appropriate to the A/C installed in the vehicle being serviced. Use of incorrect one will result in leakage of refrigerant, damage in parts or other faulty condition.

NOTE:

For the items with asterisk (*) the "CONTENTS" below, refer to the same section of the Service Manual mentioned in "FOREWORD" of this manual.

CONTENTS

General Description 1B-3
Major Components and Location 1B-3
M13 engine model 1B-3
K9K engine model 1B-3
Refrigerant Circulation 1B-4
M13 engine model 1B-4
K9K engine model 1B-4
Refrigerant Type ..... 1B- *
Diagnosis 1B-5
General Diagnosis Table ..... 1B- *
Abnormal Noise Diagnosis ..... 1B- *
Abnormal noise from compressor ..... 1B- *
Abnormal noise from magnetic clutch ..... 1B- *
Abnormal noise from tubing ..... 1B- *
Abnormal noise from condenser ..... 1B- *
Abnormal noise from crankshaft pulley ... 1B- *
Abnormal noise from tension pulley ..... 1B- *
Abnormal noise from A/C evaporator ..... 1B- *
Abnormal noise from blower fan motor ..... 1B- *
Quick Checking of Refrigerant Charge 1B-5
M13 engine model 1B-5
K9K engine model 1B-5
Performance Diagnosis 1B-5
Performance diagnosis table 1B-8
Detail diagnosis table (Ambient temperature at 30°C (86°F)) 1B-9
Compressor Drive Belt ..... 1B- *
Electronical Diagnosis 1B-12
Wiring Diagram 1B-12
M13 engine model 1B-12
K9K engine model 1B-13

A/C System Inspection of ECM and its Circuits 1B-14
M13 engine model 1B-14
Refrigerant Recovery, Evacuating and Charging 1B-17
Operation Procedure for Refrigerant Charging 1B-17
M13 engine model 1B-17
K9K engine model 1B-17
Recovery ..... 1B- *
Replenishing Compressor Oil ..... 1B- *
Evacuating ..... 1B- *
Evacuating procedure ..... 1B- *
Charging 1B-18
Charging procedure 1B-18
Removing Manifold Gauge Set ..... 1B- *
Leak Test ..... 1B- *
On-Vehicle Service 1B-21
Service Precaution 1B-21
Refrigerant line 1B-21
M13 engine model 1B-21
K9K engine model 1B-21
Handling refrigerant HFC-134a (R-134a) ..... 1B- *
Condenser Assembly 1B-22
M13 engine model 1B-22
K9K engine model 1B-23
Receiver/Dryer 1B-23
M13 engine model 1B-23
K9K engine model 1B-23
Receiver/Dryer Desiccant for M13 Engine Model 1B-24
Condenser Cooling Fan Assembly ..... 1B- *
Cooling Unit (Evaporator) ..... 1B- *
A/C Evaporator Thermistor (A/C Evaporator Temperature Sensor) ..... 1B- *
Expansion Valve ..... 1B- *
Dual Pressure Switch 1B-24
M13 engine model 1B-24
Refrigerant Pressure Sensor ..... 1B- *
A/C Switch 1B-25
Condenser Cooling Fan Motor Relay 1B-25
M13 engine model 1B-25
K9K engine model 1B-25
Compressor ..... 1B- *
Magnet Clutch ..... 1B- *
Lip Type Seal ..... 1B- *
Relief Valve ..... 1B- *
Tightening Torque Specification ..... 1B- *
Required Service Materials ..... 1B- *
Special Tools ..... 1B- *

General Description

Major Components and Location

M13 engine model

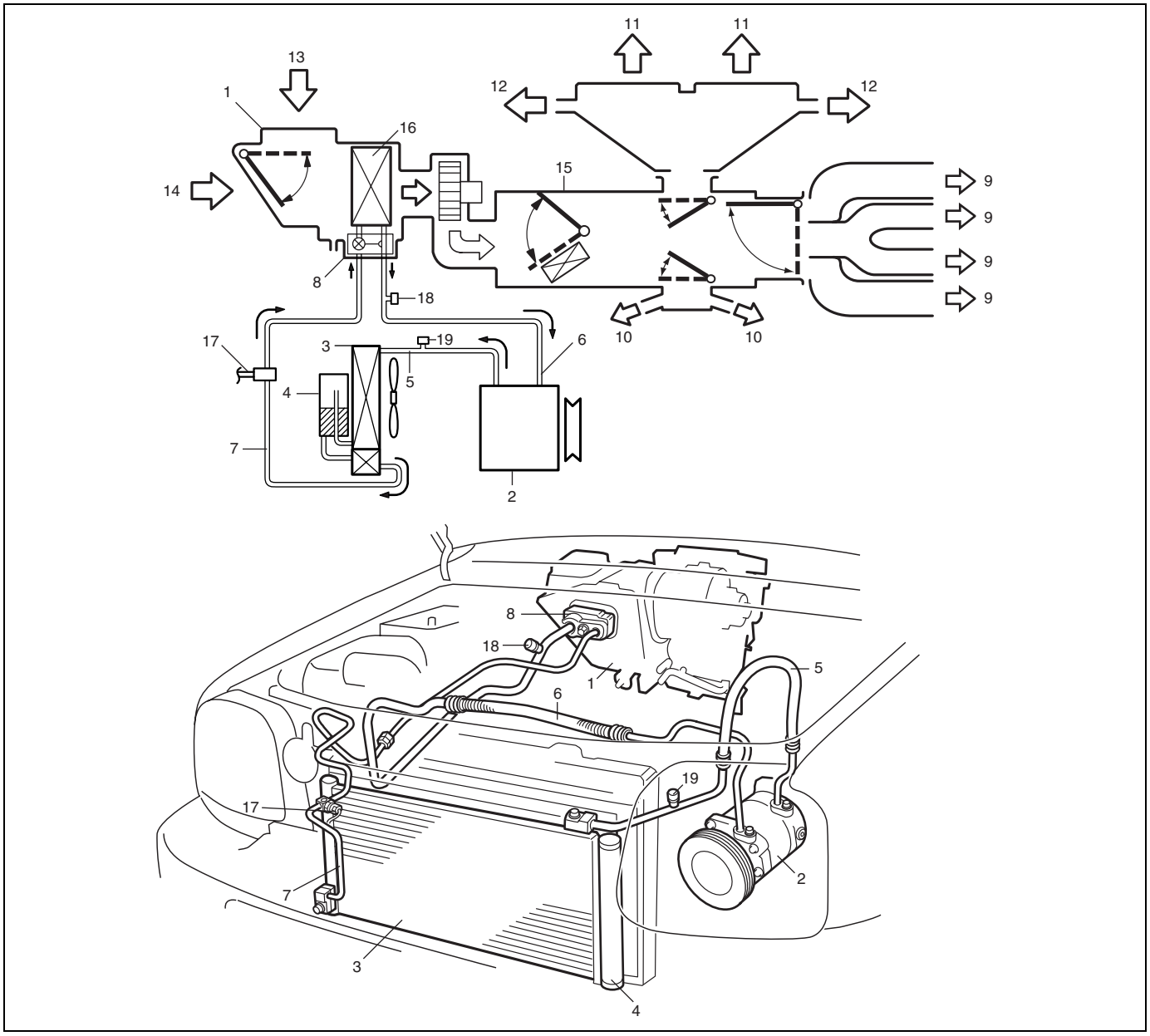

1. Cooling unit	8. Expansion valve	15. Heater unit
2. Compressor	9. Ventilation air	16. A/C evaporator
3. Condenser assembly	10. Foot air	17. Dual pressure switch
4. Receiver/dryer	11. Defroster air	18. Low pressure service valve
5. Discharge hose	12. Demister air	19. High pressure service valve
6. Suction hose	13. Fresh air	
7. Condenser outlet pipe	14. Recirculation air	

K9K engine model

NOTE:

Refer to the Major Components and Location in the same section of the Supplementary Service Manual mentioned in “FOREWORD” of this manual.

Refrigerant Circulation

M13 engine model

In the sub-cool A/C system (condenser integrated with receiver/dryer), the inside of the condenser is divided into the condensation part and the sub-cooler part, and the receiver/dryer is located between those. In the receiver/dryer, the refrigerant is separated into the vapor refrigerant and the liquid refrigerant. Only the liquid refrigerant is delivered to the sub-cooler part of the condenser. The refrigerant is supercooled by the sub-cooler part of the condenser.

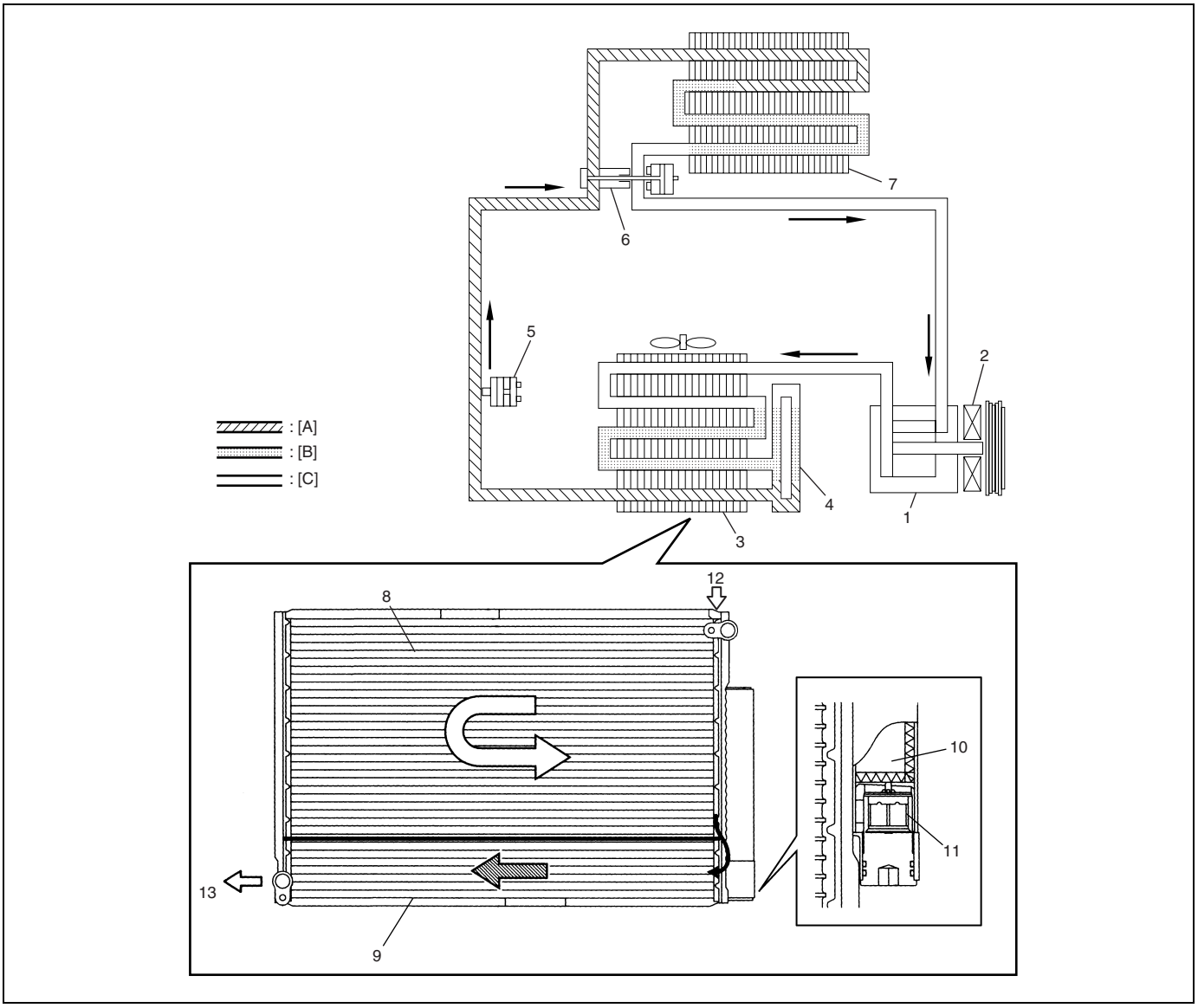

[A]: Liquid	4. Receiver/dryer	10. Desiccant
[B]: Vapor	5. Refrigerant pressure switch	11. Filter
[C]: Superheated vapor	6. Expansion valve	12. Vapor refrigerant
1. Compressor	7. A/C evaporator	13. Liquid refrigerant
2. Magnet clutch	8. Condensation part	
3. Condenser	9. Sub-cooler part	

K9K engine model

NOTE:

Refer to the Refrigerant Circulation in the same section of the Service Manual mentioned in "FOREWORD" of this manual.

Diagnosis

Quick Checking of Refrigerant Charge

M13 engine model

There is not sight glass in M13 engine model.
Regarding the refrigerant charge, refer to “Charging” in this section.

K9K engine model

NOTE:

Refer to the Quick Checking of Refrigerant Charge in the same section of the Service Manual mentioned in “FOREWORD” of this manual.

Performance Diagnosis

1) Conduct the A/C system performance inspection under the following conditions:
   - No under direct sun
   - No wind or no air circulation by other air conditioner
   - Ambient temperature within 25 – 35 °C (77 – 95 °F)
   - Relative humidity within 30 – 70 %.

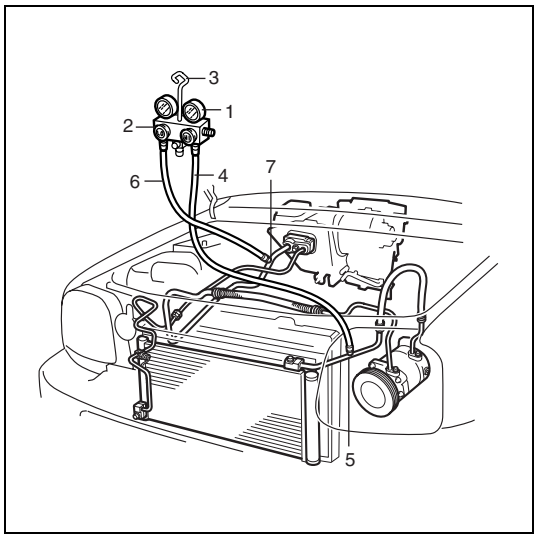

2) Make sure that high pressure valve (1) and low pressure valve (2) of manifold gauge set (3) are firmly closed.
3) Connect high pressure charging hose (4) to high pressure service valve (5), and connect low pressure charging hose (6) to low pressure service valve (7).
4) Bleed the air in charging hoses (4), (6) by loosening their respective nuts on manifold gauge set (3), utilizing the refrigerant pressure. When a hissing sound is heard, immediately tighten nut.

CAUTION:

Do not interchange high and low pressure charging hoses by mistake.

5) Warm up engine to normal operating temperature (engine coolant temperature at 80 – 90 °C (176 – 194 °F)) and keep it at specified idle speed. (Radiator cooling fan should not be working when checking pressure and temperature.)

6) Turn A/C switch ON, and set blower switch at "HI" (4th position), temperature knob at "COOL" air outlet control knob at "FACE" and fresh/circulation control knob at "CIRCULATION". (Confirm that A/C compressor and radiator/condenser cooling fan are working.)
   Keep all windows, doors and engine hood open.

Performance diagnosis condition

Ambient temperature	**25 – 35 °C (77 – 95 °F)**
Engine rpm	**At specified idle speed**
Blower fan motor switch	**"H" (4th position)**
Temperature control	**"Cool"**
Air outlet control	**"Face"**
Vehicle doors	**All open**
Air inlet door position	**Recirculation**

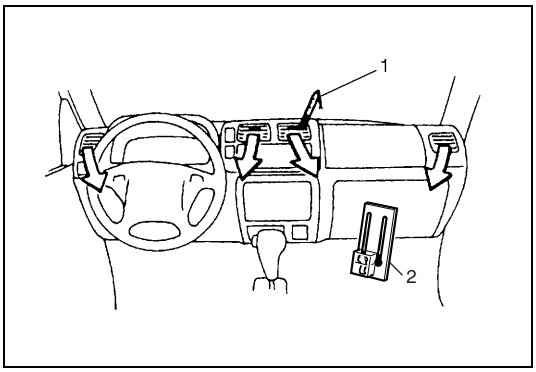

7) Place dry bulb thermometer (1) to contact center duct air outlet and a wet and dry bulb thermometer (2) near evaporator air inlet, read temperatures and confirm that both temperature and humidity are within the specified condition.

8) Check if each pressure on low side and on high side is within shaded range of the graph.
   If each gauge reading is out of specified pressure, correct defective part referring to "Performance Diagnosis Table" in this section.

NOTE:

Pressure registered on gauge varies with ambient temperature. Therefore, use graph when determining if pressures are normal or not.

Low side and high side pressure example for M13 engine model:

Gauges should read as follows when ambient temperature is 30 °C (86 °F).	
Pressure on high pressure gauge	**1480 – 1820 kPa** **14.8 – 18.2 kg/cm^2** **210.5 – 259.0 psi**
Pressure on low pressure gauge	**290 – 390 kPa** **2.9 – 3.9 kg/cm^2** **41.5 – 55.5 psi**

9) Check inlet port temperature-to-outlet port temperature relationship using graph. For example, if evaporator inlet port temperature is 30 °C (86 °F) and center duct air outlet temperature is 20 °C (68 °F), their crossing point is within acceptable range as shown in the graph.
If crossing point is out of acceptable range, diagnose trouble referring to “Performance Diagnosis Table” in this section.

M13 Engine Model

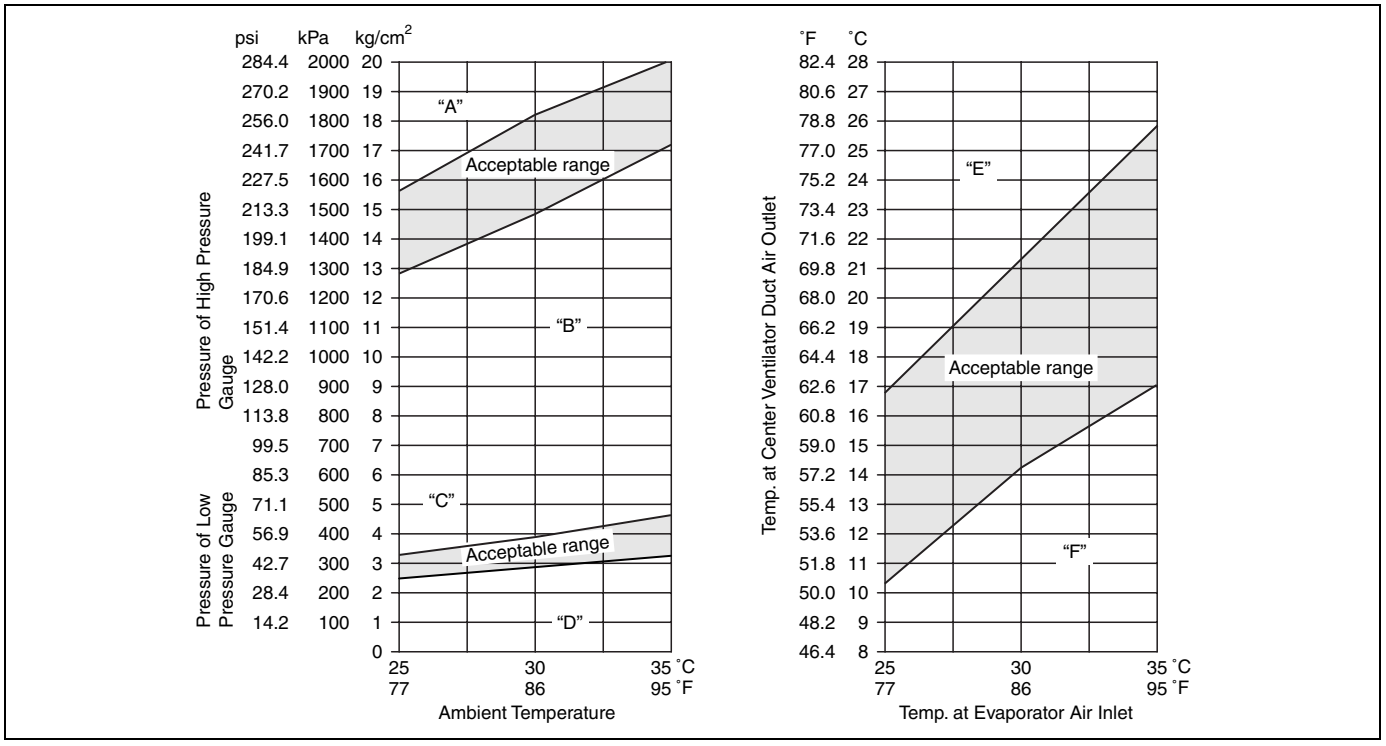

K9K Engine Model

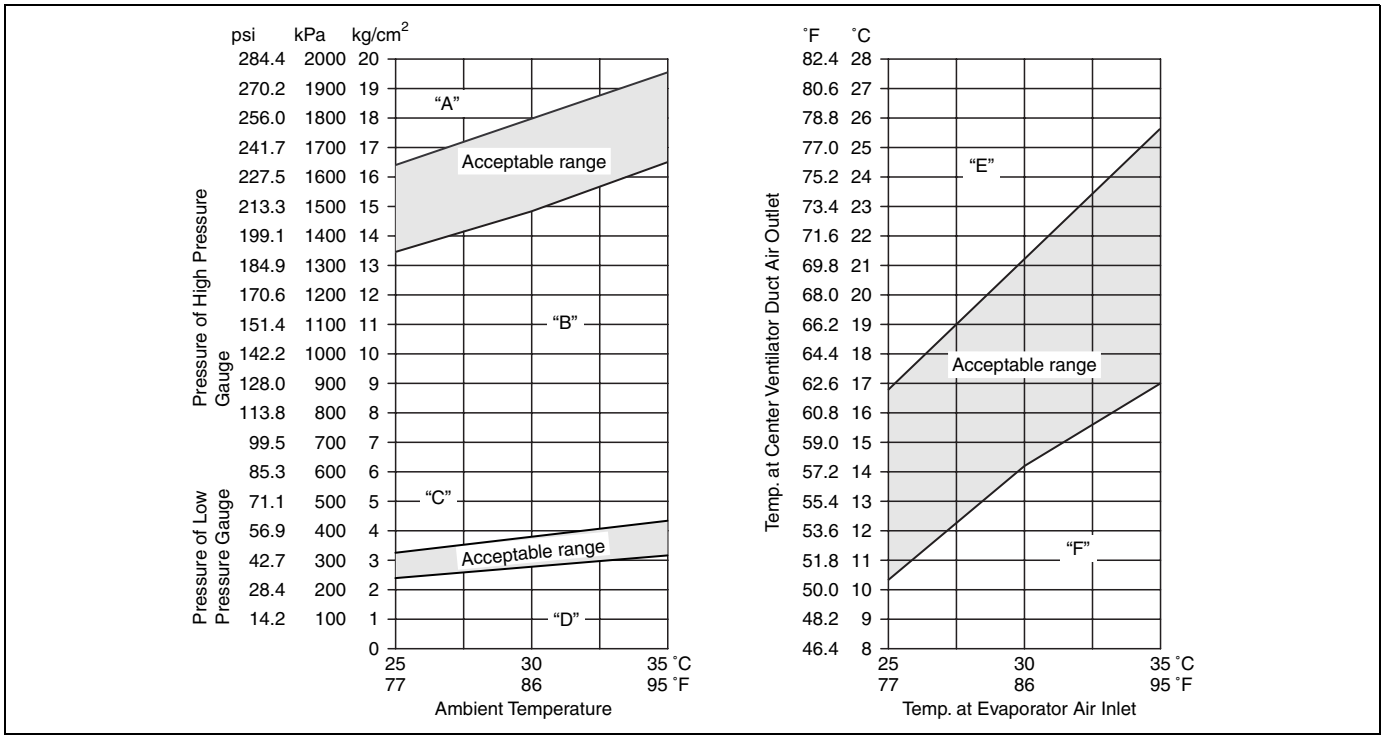

Performance diagnosis table

NOTE:

If ambient temperature is approximately 30 °C (86 °F), it is possible to diagnose A/C system in detail referring to "Detail Diagnosis Table (Ambient Temperature At 30 °C (86 °F))" under "Performance Diagnosis" in this section.

High Pressure Gauge

Condition	Possible Cause	Correction
Pressure in higher than acceptable range ("A" area)	Refrigerant overcharged	Recharge
	Expansion valve frozen or clogged	Check expansion valve
	Clogged refrigerant passage of high side	Clean or replace
	Condenser cooling fan malfunction (Insufficient cooling of condenser)	Check condenser cooling fan
	Dirty or bent condenser fins (Insufficient cooling of condenser)	Clean or repair
	Compressor malfunction (Insufficient oil etc.)	Check compressor
	Engine overheat	Check engine cooling system referring to Section 6B.
Pressure is lower than acceptable range ("B" area)	Insufficient refrigerant (Insufficient charge or leakage)	Check for leakage, repair if necessary and recharge
	Expansion valve malfunction (valve opens too wide)	Check expansion valve
	Compressor malfunction (Insufficient compression)	Check compressor

Low Pressure Gauge

Condition	Possible Cause	Correction
Pressure is higher than acceptable range ("C" area)	Expansion valve malfunction (valve opens too wide)	Check expansion valve
	Compressor malfunction (Insufficient compression)	Check compressor
Pressure is lower than acceptable range ("D" area)	Insufficient refrigerant (Insufficient charge or leakage)	Check for leakage, repair if necessary and recharge
	Expansion valve malfunction (valve opens too narrow)	Check expansion valve
	Clogged refrigerant passage (crashed pipe)	Repair or replace

Crossing Point of Center Ventilation Louver Temperature and Recirculation Air Inlet Temperature

Condition	Possible Cause	Correction
Crossing point is higher than acceptable range ("E" area)	Insufficient or excessive charge of refrigerant	Check refrigerant pressure
	Dirty or bent A/C evaporator fins	Clean or repair
	Air leakage from cooling (heater) unit or air duct	Repair or replace
	Malfunctioning, switch over function of door in cooling (heater) unit	Repair or replace
	Compressor malfunction	Check compressor
Crossing point is lower than acceptable range ("F" area)	Insufficient air volume from center duct (Heater blower malfunction)	Check blower motor and fan
	Compressor malfunction	Check compressor

Detail diagnosis table (Ambient temperature at 30°C (86°F))

NOTE:

The upper values without asterisk (*) are for M13 engine model.
The lower values with asterisk (*) are for K9K engine model.

Condition			Possible Cause	Correction
MANIFOLD GAUGE MPa (kg/cm^2) (psi)		Detail		
Lo	Hi			
0.29 – 0.39 (2.9 – 3.9) (42 – 56) 0.27 – 0.37* (2.7 – 3.7)* (39 – 53)*	**1.48 – 1.82 (14.8 – 18.2) (211 – 259) 1.48 – 1.80* (14.8 – 18.0)* (211 – 256)***	**Normal condition**	–	–
Negative pressure	**0.5 – 0.6 (5 – 6) (71.2 – 85.3)**	**The low pressure side reads a negative pressure, and the high pressure side reads an extremely low pressure. Presence of frost around tubing to and from receiver/dryer and expansion valve.**	Dust particles or water droplets are either stuck or frozen inside expansion valve, preventing the refrigerant from flowing.	Clean expansion valve. Replace it if it cannot be cleaned. Replace receiver/dryer. Evacuate the A/C system and recharge with fresh refrigerant.

Condition			Possible Cause	Correction
MANIFOLD GAUGE MPa (kg/cm^2) (psi)		Detail		
Lo	Hi			
Normal: **0.29 – 0.39** **(2.9 – 3.9)** **(42 – 56)** **0.27 – 0.37*** **(2.7 – 3.7)*** **(39 – 53)*** ↑↓ **Abnormal:** **Negative pressure**	**Normal:** **1.48 – 1.82** **(14.8 – 18.2)** **(211 – 259)** **1.48 – 1.80*** **(14.8 – 18.0)*** **(211 – 256)*** ↑↓ **Abnormal:** **0.69 – 0.98** **(7 – 10)** **(100 – 142)**	**During A/C operation, the low pressure side sometimes indicates negative pressure, and sometimes normal pressure. Also high pressure side reading fluctuates between the abnormal and normal pressure.**	Expansion valve is frozen due to moisture in the system, and temporarily shuts off the refrigeration cycle.	Replace expansion valve. Replace receiver/dryer. Evacuate A/C system and recharge with fresh refrigerant.
0.05 – 0.15 **(0.5 – 1.5)** **(4.2 – 21.3)**	**0.69 – 0.98** **(7 – 10)** **(100 – 142)**	**Both low and high pressure sides indicate low readings.** **Continuous air bubbles are visible through sight glass.** **Output air is slightly cold.**	Insufficient refrigerant in system. (Refrigerant leaking)	Using leak detector, check for leaks and repair as necessary. Recharge refrigerant to a specified amount. If the pressure reading is almost 0 when the manifold gauges are attached, check for any leaks, repair them, and evacuate the system.
0.4 – 0.6 **(4 – 6)** **(56.9 – 85.3)**		**Pressure on low pressure side is high.** **Pressure on high pressure side is low.** **Both pressure becoming equal right after A/C is turned OFF.**	Internal leak in compressor.	Inspect compressor and repair or replace as necessary.

Condition			Possible Cause	Correction
MANIFOLD GAUGE MPa (kg/cm^2) (psi)		Detail		
Lo	Hi			
0.35 – 0.45 (3.5 – 4.5) (50 – 64)	**1.96 – 2.45 (20 – 25) (285 – 355)**	**Pressure on both low and high pressure sides is high. Air bubbles are not visible even when engine rpm is lowered.**	Overcharged A/C system. Faulty condenser cooling operation. Faulty condenser cooling fan operation.	Adjust refrigerant to specified amount. Clean condenser. Inspect and repair condenser cooling fan.
		Pressure on both low and high pressure sides is high. Low pressure side tubing is not cold when touched. Air bubbles are visible through sight glass.	Presence of air in A/C system. (Improperly evacuated)	Replace receiver/dryer. Inspect quantity of compressor oil and presence of contaminants in oil. Evacuate system and recharge with fresh refrigerant.
0.45 – 0.55 (4.5 – 5.5) (64 – 78)		**Pressure on both low and high pressure sides is high. Large amount of frost or dew on the low pressure side tubing.**	Faulty expansion valve. Refrigerant flow is not regulated properly.	Replace expansion valve.

Electronical Diagnosis

Wiring Diagram

M13 engine model

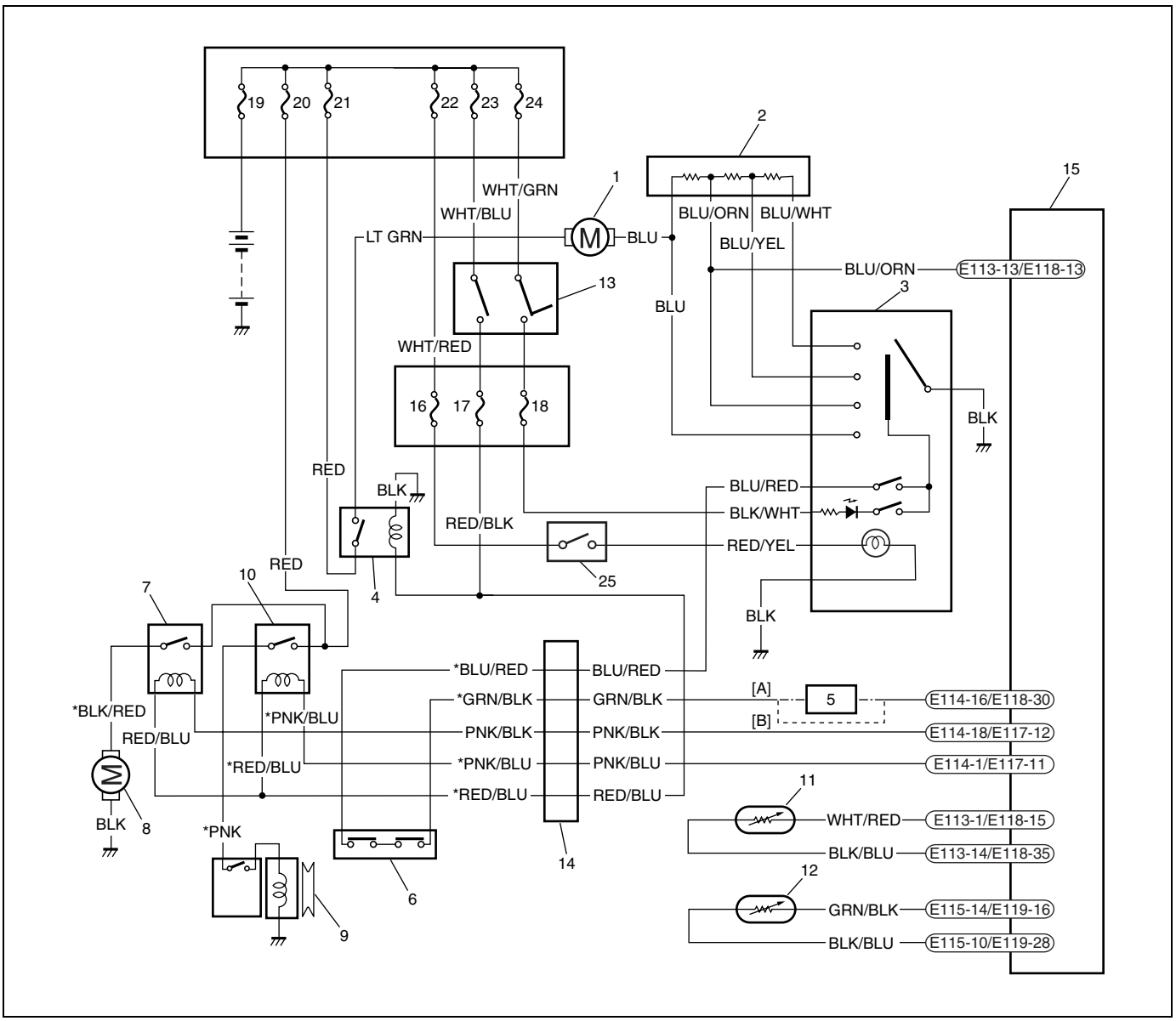

[A]: 4WD model	8. Condenser cooling fan motor	17. "IGN2 SIG" fuse
[B]: 2WD model	9. Compressor	18. "IG" fuse
1. Heater blower motor	10. Compressor relay	19. Fuse
2. Heater blower motor resister	11. A/C evaporator thermistor	20. Fuse
3. Heater control lever assembly	12. ECT sensor	21. Fuse
4. Heater blower motor relay	13. Ignition switch	22. Fuse
5. 4WD controller	14. Connector	23. Fuse
6. Dual pressure switch	15. ECM	24. Fuse
7. Condenser cooling fan motor relay	16. "TAIL" fuse	25. Lighting switch

NOTE:

Detail of wiring color with asterisk (*), refer to WIRING DIAGRAM MANUAL.

K9K engine model

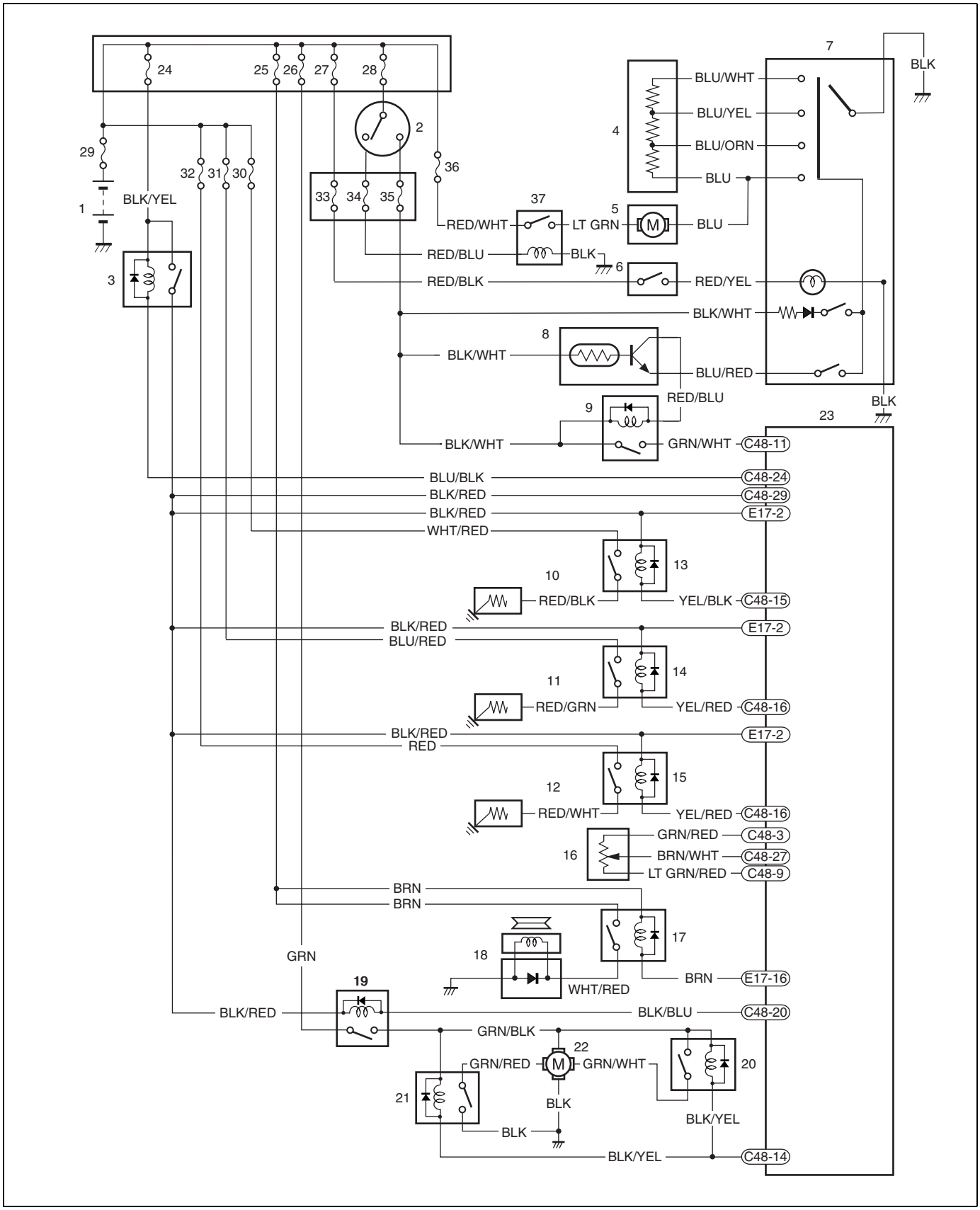

1. Battery	14. Additional heater relay No.2	27. Fuse
2. Ignition switch	15. Additional heater relay No.3	28. Fuse
3. Main relay	16. Refrigerant pressure sensor	29. “MAIN” fuse
4. Heater blower resistor	17. Compressor relay	30. “ADDITIONAL HEATER No.1” fuse
5. Heater blower motor	18. Compressor	31. “ADDITIONAL HEATER No.2” fuse
6. Lighting switch	19. Engine cooling fan motor relay No.1	32. “ADDITIONAL HEATER No.3” fuse
7. Heater control lever assembly	20. Engine cooling fan motor relay No.2	33. “TAIL” fuse
8. A/C evaporator temperature sensor	21. Engine cooling fan motor relay No.3	34. “IG2 SIG” fuse
9. A/C relay	22. Engine cooling fan motor	35. “IG” fuse
10. Additional heater No.1	23. ECM	36. “HEATER” fuse
11. Additional heater No.2	24. Fuse	37. Heater blower motor relay
12. Additional heater No.3	25. Fuse	
13. Additional heater relay No.1	26. Fuse	

A/C System Inspection of ECM and its Circuits

M13 engine model

ECM and its circuits can be checked at ECM wiring couplers by measuring voltage.

CAUTION:

ECM cannot be checked by itself. It is strictly prohibited to connect voltmeter or ohmmeter to ECM with couplers disconnected from ECM.

Voltage Check

1) Remove ECM from vehicle by referring to “Engine Control Module” in Section 6E.
2) Connect ECM couplers (1) to ECM (2).
3) Check voltage at each terminal of couplers connected.

NOTE:

Because each terminal voltage is affected by the battery voltage, confirm that the battery voltage is 11 V or more when ignition switch is ON.

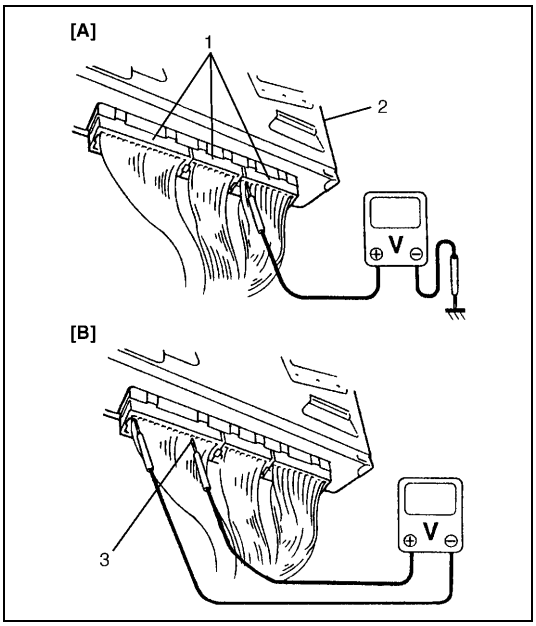

[A]: Fig. A
[B]: Fig. B
3. E115-2 or E115-3 (engine with VVT) E117-1 or E117-2 (engine without VVT)

Terminal arrangement of ECM coupler (Viewed from harness side) without VVT

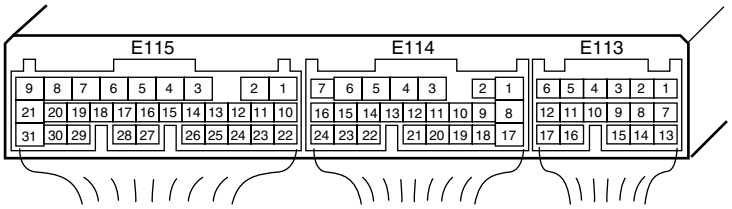

Terminal arrangement of ECM coupler (Viewed from harness side) with VVT

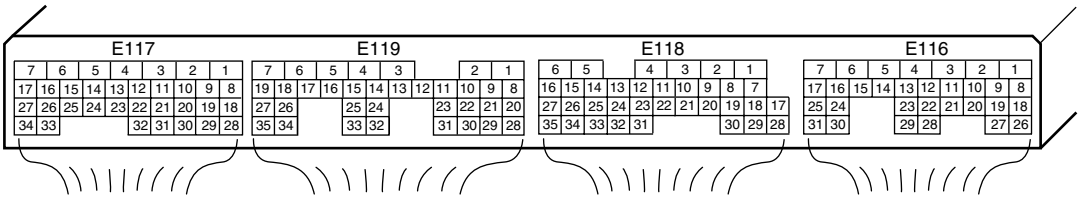

ECM Voltage Values Table for Relation of A/C Control

NOTE:

Upper terminal number is for engine without VVT.
Lower terminal number is for engine with VVT.

Terminal	Wire	Circuit	Measurement ground	Normal value	Condition
E114-1 (E117-11)	PNK/ BLU	Compressor magnet clutch output	Ground to engine (Fig B)	0 – 1 V	Blower fan motor switch and A/C switch ON with engine running
				11 – 15 V	Except the above-mentioned condition with engine running
E114-16 (E118-30)	GRN/ WHT	A/C switch input	Ground to engine (Fig B)	11 – 15 V	Blower fan motor switch or A/C switch OFF with engine running
				0 – 1 V	Blower fan motor switch and A/C switch ON with engine running
				11 – 15 V	Within several seconds after operate transfer lever between 2WD and 4WD with above condition
E114-18 (E117-12)	PNK/ BLK	Condenser cooling fan relay output	Ground to engine (Fig B)	0 – 1 V	Blower fan motor switch and A/C switch ON or engine coolant temperature at more than 110 °C (230 °F) with engine running.
				12 – 15 V	Except the above-mentioned condition with engine running
E113-14 (E118-35)	BLK/ BLU	Sensor ground for A/C evaporator	Ground to body (Fig A)	–0.5 – 1 V	Engine running

Terminal	Wire	Circuit	Measurement ground	Normal value	Condition
E113-13 (E118-13)	BLU/ ORN	Blower fan speed input	Ground to engine (Fig B)	0 – 1 V	Blower fan motor switch 3rd or 4th with engine running
				4 – 8 V	Blower fan motor switch 1st or 2nd with engine running
				12 – 15 V	Blower fan motor switch and A/C switch OFF with engine running
E115-1 (E119-1)	BLK	Main ground for ECM	Ground to engine (Fig A)	–0.5 – 1 V	Engine running
E115-2 (E117-1)	BLK/ RED	ECM ground for power circuit	Ground to engine (Fig A)	–0.5 – 1 V	Engine running
E115-3 (E117-2)	BLK/ RED	ECM ground for power circuit	Ground to engine (Fig A)	–0.5 – 1 V	Engine running
E115-10 (E119-28)	BLK/ BLU	Sensor ground for ECT sensor	Ground to body (Fig A)	–0.5 – 1 V	Engine running
E115-14 (E119-16)	GRN/ BLK	ECT sensor input	Ground to engine (Fig B)	0.73 – 0.83 V (315 – 355 Ω)	Engine coolant temperature at approximately 80 °C (176 °F) with engine running
				0.35 – 0.45 V (145 – 165 Ω)	Engine coolant temperature at approximately 110 °C (230 °F) with engine running *If the temperature is more than 113 °C (235 °F), compressor should be stop (come back at less than 111 °C (232 °F)
E113-1 (E118-15)	WHT/ RED	A/C evaporator thermistor temperature input	Ground to engine (Fig B)	2.0 – 2.3 V (1800 – 2200 Ω)	Evaporator thermistor temperature at approximately 25 °C (77 °F) with engine running
				3.5 – 3.6 V (6300 – 7000 Ω)	Evaporator thermistor temperature at approximately 0 °C (32 °F) with engine running *If the temperature is less than approximately 2.5 °C (36.5 °F), compressor cooling fan should be stop (come back at less than approximately 4 °C (39.2 °F)

Refrigerant Recovery, Evacuating and Charging

WARNING:

- **Your eyes should not be exposed to refrigerant (liquid).**
  Any liquid HFC-134a (R-134a) escaping by accident shows a temperature as low as approximately –6 °C (21 °F) below freezing point. Should liquid HFC-134a (R-134a) get into your eyes, it may cause a serious injury. To protect your eyes against such accident, it is necessary to always wear goggles. Should it occur that HFC-134a (R-134a) strikes your eyes, consult a doctor immediately.
  - **Do not use your hand to rub the affected eye(s). Instead, use quantities of fresh cold water to splash it over the affected area to gradually raise temperature of such area above freezing point.**
  - **Obtain proper treatment as soon as possible from a doctor or eye specialist.**
- **Should the HFC-134a (R-134a) liquid come into contact with your skin, the affected area should be treated in the same manner as when skin is frostbitten or frozen.**
- **Refrigerant must not be handled near where welding or steam cleaning is performed.**
- **Refrigerant should be kept at a cold and dark place. It should never be stored where a high temperature is anticipated, e.g. where exposed to direct sun light, close to fire or inside vehicle (including trunk room).**
- **Avoid breathing fumes produced when HFC-134a (R-134a) is burned. Such fumes may be hazardous to health.**

Operation Procedure for Refrigerant Charging

M13 engine model

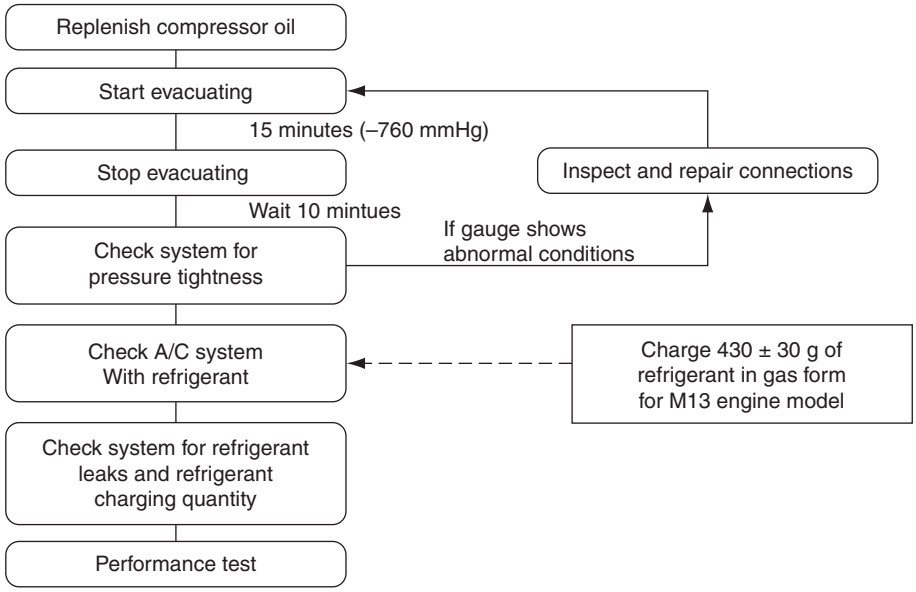

K9K engine model

NOTE:

Refer to the Operation Procedure for Refrigerant Charging in the same section of the Supplementary Service Manual mentioned in "FOREWORD" of this manual.

Charging

CAUTION:

- **Always charge through low pressure side of A/C system at after the initial charging is performed from the high pressure side with the engine stopped.**
- **Never charge to high pressure side of A/C system with engine running.**
- **Do not charge while compressor is hot.**
- **When installing tap valve to refrigerant container to make a hole there through, carefully follow directions given by manufacturer.**
- **A pressure gauge should always be used before and during charging.**
- **The refrigerant container should be emptied of refrigerant when discarding it.**
- **The refrigerant container should not be heated up to 40 °C (104 °F) or over.**
- **Refrigerant container should not be reversed in direction during charging. Reversing in direction causes liquid refrigerant to enter compressor, causing troubles, such as compression of liquid refrigerant and the like.**

NOTE:

The air conditioning system contains HFC-134a (R-134a). Described here is a method to charge the air conditioning system with refrigerant from the refrigerant service container.
When charging refrigerant recovered by using the refrigerant and recycling equipment (when recycling refrigerant), follow the procedure described in the equipment manufacturer's instruction manual.

Charging procedure

The initial charging of the A/C system is performed from the high pressure side with the engine stopped.
And next, this method must be followed by charging from the low pressure side with the engine running.

1) Check to make sure that hoses are routed properly after evacuating the system.

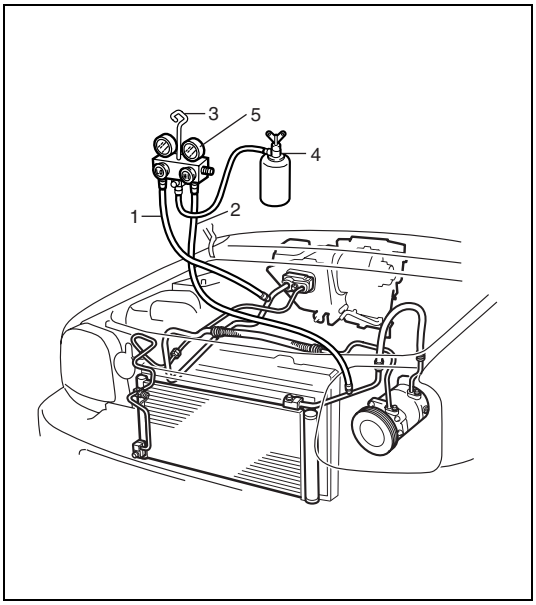

2) Connect Low charging hose (1) and High charging hose (2) of the manifold gauge set (3) in position. Thus open refrigerant container valve (4) to purge the charging line.
3) Open the high pressure side valve (5) and charge refrigerant to system.
4) After a while, open the low pressure side valve (6) and close the high pressure side valve (5).
5) Start engine and keep engine speed at 1500 r/min. Then, operate air conditioning.
6) Charge A/C system with refrigerant in vapor state. At this time, refrigerant container should be held upright.

WARNING:
Make sure that high pressure side valve is closed securely.

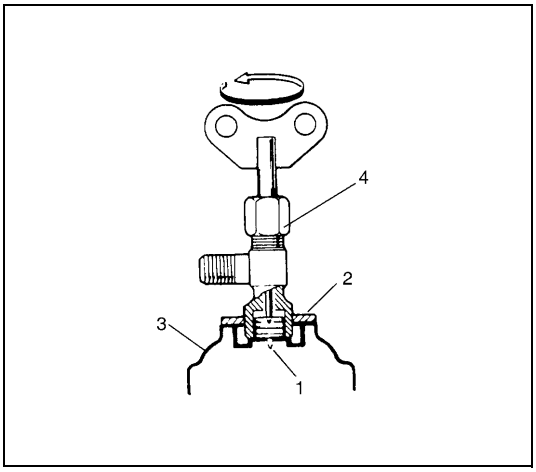

7) When refrigerant container (3) is emptied, use the following procedure to replace refrigerant container with a new refrigerant container (3).
   a) Close low pressure valve.
   b) Replace empty container (3) with a refrigerant container which has been charged with refrigerant. When using refrigerant container tap valve (4), use the following procedure for replacement.
      i) Retract needle (1) and remove refrigerant container tap valve (4) by loosening its plate nut (2).
      ii) Install previously-removed refrigerant container tap valve (4) to a new refrigerant container (3).

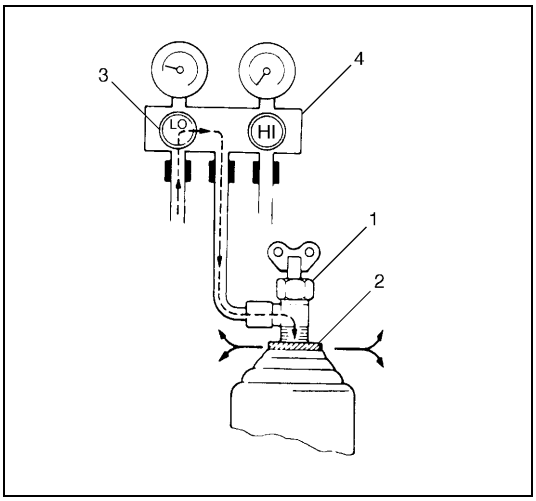

   c) Purge any air existing in center charging hose
      When using refrigerant container tap valve, use the following procedure to purge air.
      i) Once fully tighten refrigerant container tap valve (1), and then loosen (open) plate nut (2) slightly.
      ii) Open low pressure side valve (3) of manifold gauge set (4) a little.
      iii) As soon as refrigerant comes out with a “hiss” through a clearance between refrigerant container and tap valve, tighten plate nut (2) as well as low pressure side valve (3).
      iv) Turn handle of tap valve (1) clockwise so that its needle is screwed into the new container to make a hole for refrigerant flow.

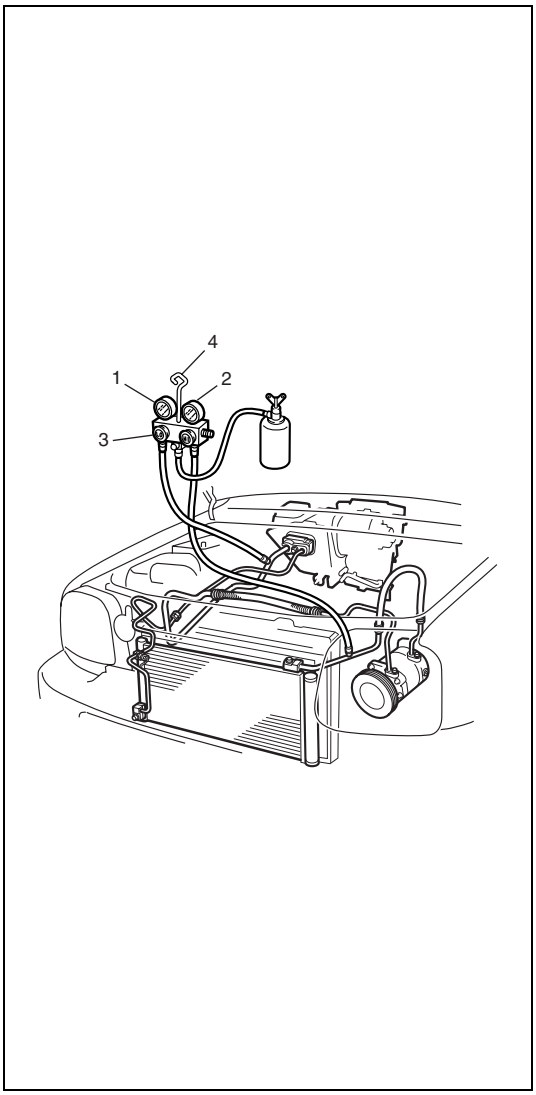

8) After the system has been charged with specified amount (400 – 460 g for M13 engine model / 500 – 600 g for K9K engine model) of refrigerant or when low pressure gauge (1) and high pressure gauge (2) have indicated the following specified amount, close low pressure side valve (3) on manifold gauge set (4).

Gauge readings for M13 engine model

Gauges should read as follows when ambient temperature is 30 °C (86 °F).	
Pressure on high pressure gauge	**1480 – 1820 kPa** **14.8 – 18.2 kg/cm^2** **210.5 – 259.0 psi**
Pressure on low pressure gauge	**290 – 390 kPa** **2.9 – 3.9 kg/cm^2** **41.5 – 55.5 psi**

Gauge readings for K9K engine model

Gauges should read as follows when ambient temperature is 30 °C (86 °F).	
Pressure on high pressure gauge	**1480 – 1800 kPa** **14.8 – 18.0 kg/cm^2** **210.5 – 256.0 psi**
Pressure on low pressure gauge	**270 – 370 kPa** **2.7 – 3.7 kg/cm^2** **38.5 – 53.0 psi**

On-Vehicle Service

Service Precaution

When servicing air conditioning system, note the following instructions.

Refrigerant line

M13 engine model

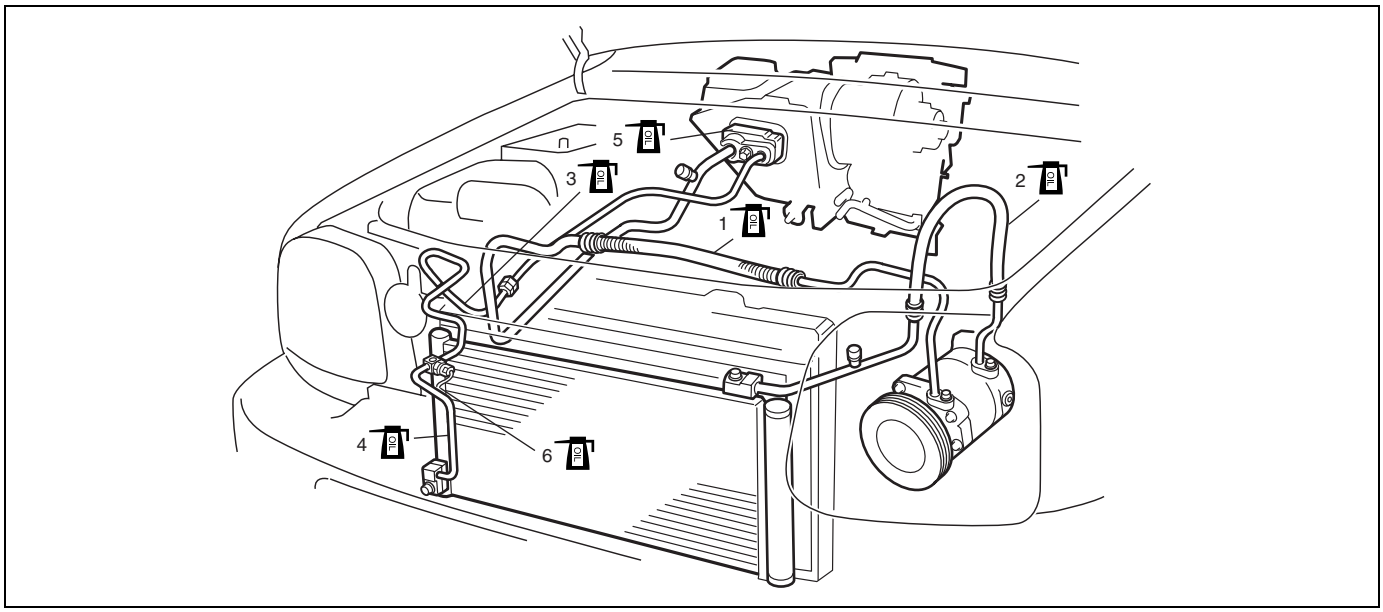

1. Suction hose: Apply compressor oil to O-ring.	4. Condenser outlet pipe: Apply compressor oil to O-ring.
2. Discharge hose: Apply compressor oil to O-ring.	5. Expansion valve: Apply compressor oil to O-ring.
3. Receiver/dryer outlet pipe: Apply compressor oil to O-ring.	6. Dual pressure switch: Apply compressor oil to O-ring.

- Never use heat for bending pipes. When bending a pipe, try to make its bending radius as slight as possible.
- Keep internal parts of air conditioning free from moisture and dirt. When disconnecting any line from system, install a blind plug or cap to the fitting immediately.
- When connecting hoses and pipes, apply a few drops of compressor oil to seats of coupling nuts and O-ring.
- When tightening or loosening a fitting, use two wrenches, one for turning and the other for support.
- Tighten flared nuts by the following specified torque.

Tightening torque (Flared Nut Used for)
8 mm pipe: 13 N·m (1.3 kg-m, 9.5 lb-ft)
12 mm pipe: 23 N·m (2.3 kg-m, 17.0 lb-ft)
14.5 mm pipe: 33 N·m (3.3 kg-m, 24.0 lb-ft)

- Route drain hose so that drained water does not make any contact to vehicle components.
- Before evacuating and charging refrigerant, replenish specified amount of compressor oil to compressor suction side by referring to “Replenishing Compressor Oil” in this section.

K9K engine model

NOTE:

Refer to the Refrigerant line in the same section of the Supplementary Service Manual mentioned in “FOREWORD” of this manual.

Condenser Assembly

M13 engine model

CAUTION:

Be careful not to damage condenser fins. If condenser fin is bent, straighten it by using flat head screwdriver or pair of pliers.

Inspection

Check the following.

- Check clog of condenser fins.
  If, any clogs are found, condenser fins should be washed with water, and should be dried with compressed air.
- Check condenser fins for leakage and breakage.
  If any defects are found, repair or replace condenser.
- Check condenser fittings for leakage.
  If any defects are found, repair or replace condenser.

Removal

1) Disconnect negative (–) cable at battery.
2) Recover refrigerant from A/C system by referring to “Recovery” in this section.

NOTE:

The amount of removed compressor oil must be measured for replenishing compressor oil.

3) Remove front bumper referring to “Front Bumper” in Section 8.
4) Disconnect A/C condenser cooling fan motor and dual pressure switch connectors.
5) Remove radiator mounting bolts.

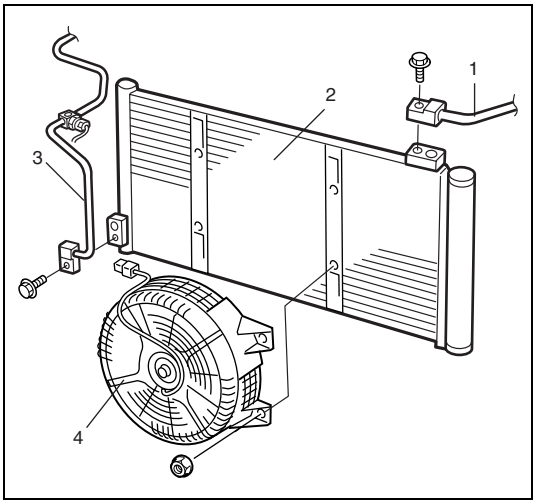

6) Disconnect discharge hose (1) from condenser (2).
7) Disconnect receiver/dryer outlet pipe (3) from condenser.
8) Remove condenser cooling fan assembly (4) from condenser (2).
9) Remove condenser (2) from radiator.

Installation

Reverse removal procedure to install condenser, and then noting the following instructions.

- Replenish specified amount of compressor oil to compressor suction side by referring to “Replenishing Compressor Oil” in this section.
- Evacuate and charge refrigerant by referring to “Evacuating” and “Charging” in this section.

K9K engine model

NOTE:

Refer to the Condenser Assembly in the same section of the Supplementary Service Manual mentioned in “FOREWORD” of this manual.

Receiver/Dryer

M13 engine model

NOTE:

Condenser assembly and receiver/dryer are integrated. When the receiver/dryer desiccant replacement is needed, refer to the Receiver/Dryer Desiccant for M13 Engine Model in this section.

K9K engine model

NOTE:

Refer to the Receiver/Dryer in the same section of the Supplementary Service Manual mentioned in “FOREWORD” of this manual.

Receiver/Dryer Desiccant for M13 Engine Model

Removal

1) Remove condenser assembly referring to “Condenser Assembly” in this section.

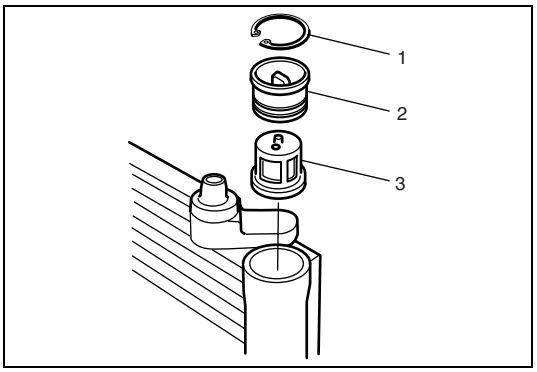

2) Remove circlip (1), receiver/dryer cap (2) and filter (3).
3) Remove disiccant.

Installation

Reverse removal procedure to install desiccant noting the following instructions.

- Do not remove desiccant from the plastic bag until just before inserting it into the receiver.
- Replenish specified amount of compressor oil to compressor suction side by referring to “Operation Procedure for Refrigerant Charging”.
- Sufficiently apply compressor oil to the fitting surfaces of the O-ring and the cap.

Dual Pressure Switch

M13 engine model

Inspection

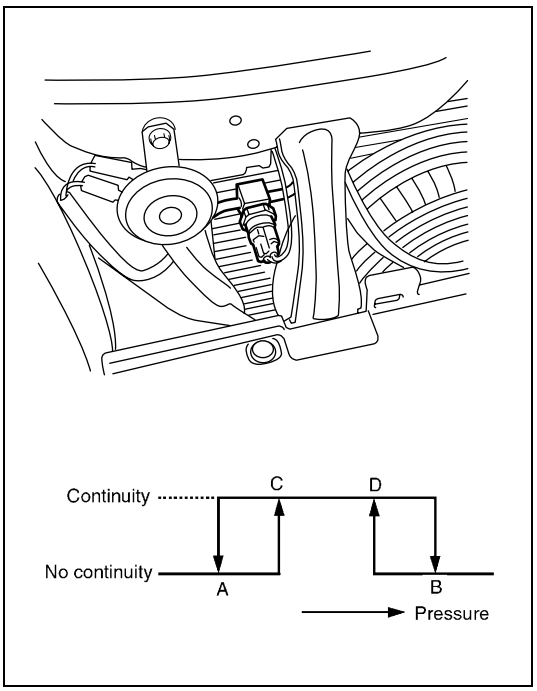

1) Check dual pressure switch (1) for continuity at normal temperature (approximately 25 °C (77 °F)) when A/C system has a proper charge of refrigerant and A/C system (compressor) is under operation. In each of these cases, switch should show proper continuity.
2) Check switch for continuity at specified pressure as shown.

A: Approximately 195 kPa (1.95 kg/cm^2, 27.5 psi)
B: Approximately 3140 kPa (31.4 kg/cm^2, 446.5 psi)
C: Approximately 225 kPa (2.25 kg/cm^2, 32.0 psi)
D: Approximately 2550 kPa (25.5 kg/cm^2, 362.5 psi)

Tightening torque
Dual pressure switch
(a): 10 N·m (1.0 kg-m, 7.5 lb-ft)

A/C Switch

Removal and Installation

Refer to “Heater Control Lever Assembly” in Section 1A.

Inspection

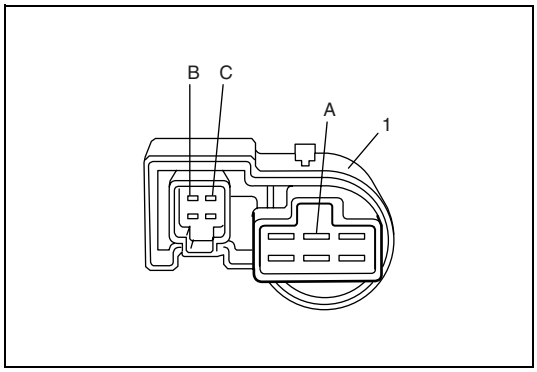

- Press A/C switch button and blower fan switch to any “ON” position and check if there is continuity between terminals “A” and “B”.
- With battery voltage (+) connected to terminal “C” and (–) to terminal “A”, press A/C Switch button and blower fan switch to “Hi” (4th position).
  Check if indicator lamp lights.

1. Blower fan and A/C switch

Condenser Cooling Fan Motor Relay

M13 engine model

Inspection

1) Disconnect negative (–) cable at battery.
2) Remove condenser cooling fan motor relay (1) from vehicle.
3) Check that there is no continuity between terminal “a” and “b”. If there is continuity, replace relay.
4) Check that there is continuity between terminals “a” and “b” when battery is connected to terminal “c” and “d”.
   If there is no continuity, replace relay.

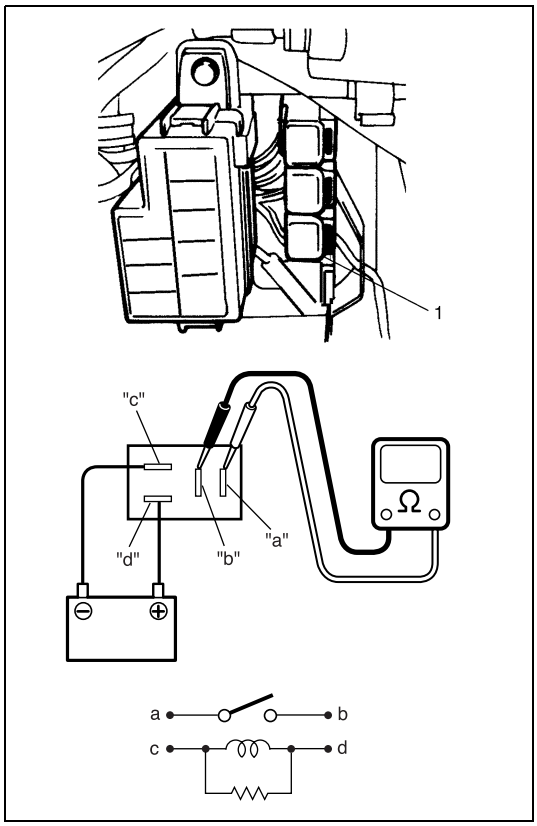

K9K engine model

NOTE:

Refer to the Condenser Cooling Fan Motor Relay in the same section of the Supplementary Service Manual mentioned in “FOREWORD” of this manual.

SECTION 3C

STEERING WHEEL AND COLUMN

WARNING:

For vehicles equipped with a Supplemental Restraint (Air Bag) System:

- **Service on and around the air bag system components or wiring must be performed only by an authorized SUZUKI dealer. Please observe all WARNINGS and "Service Precautions" under "On-Vehicle Service" in air bag system section before performing service on or around the air bag system components or wiring. Failure to follow WARNINGS could result in unintentional activation of the system or could render the system inoperative. Either of these two conditions may result in severe injury.**
- **The procedures in this section must be followed in the order listed to temporarily disable the air bag system and prevent false diagnostic codes from setting. Failure to follow procedures could result in possible air bag system activation, personal injury or otherwise unneeded air bag system repairs.**

CAUTION:

When fasteners are removed, always reinstall them at the same location from which they were removed. If a fastener needs to be replaced, use the correct part number fastener for that application. If the correct part number fastener is not available, a fastener of equal size and strength (or stronger) may be used. Fasteners that are not reused, and those requiring thread-locking compound, will be called out. The correct torque value must be used when installing fasteners that require it. If the above procedures are not followed, parts or system damage could result.

NOTE:

- **For the items with asterisk (*) in the "CONTENTS" below, refer to the same section of the Service Manual mentioned in "FOREWORD" of this manual.**

CONTENTS

General Description 3C-2
Diagnosis 3C-*
Inspection and Repair Required After Accident ..... 3C- *
On-Vehicle Service 3C-3
Service Precautions (For Vehicle with Air Bag System) ..... 3C- *
Diagnosis and servicing ..... 3C- *
Disabling air bag system ..... 3C- *
Enabling air bag system ..... 3C- *
Handling and storage ..... 3C- *
Disposal ..... 3C- *
Drive Air Bag (Inflator) Module (For Vehicle with Air Bag System) 3C-3
Steering Wheel ..... 3C- *
Centering contact coil (for vehicle with air bag system) 3C-4
Combination Switch (For Vehicle without Air Bag System)/Contact Coil and Combination Switch Assembly (For Vehicle with Air Bag System) 3C-5
Steering Column Assembly 3C-8
Steering Lock Assembly (Ignition Switch) ..... 3C- *
Steering Lower Shaft ..... 3C- *
Checking Steering Column for Accident Damage 3C-12
Tightening Torque Specifications ..... 3C- *
Required Service Material ..... 3C- *
Special Tool ..... 3C- *

General Description

This double tube type steering column has the following three important features in addition to the steering function:

- The column is energy absorbing, designed to compress in a front-end collision.
- The ignition switch and lock are mounted conveniently on this column.
- With the column mounted lock, the ignition and steering operations can be locked to inhibit theft of the vehicle.

To insure the energy absorbing action, it is important that only the specified screws, bolts and nuts be used as designated and that they are tightened to the specified torque.

When the column assembly is removed from the vehicle, special care must be taken in handling it. Use of a steering wheel puller other than the one recommended in this manual or a sharp blow on the end of the steering shaft, leaning on the assembly, or dropping the assembly could shear the plastic shear pins which maintain column length and position.

The driver air bag (inflator) module is one of the supplemental restraint (air bag) system components and is mounted to the center of the steering wheel. During certain frontal crashes, the air bag system supplements the restraint of the driver's and passenger's seat belts by deploying the air bags.
The air bag (inflator) module should be handled with care to prevent accidental deployment. When servicing, be sure to observe all WARNINGS and CAUTIONS in this section and "Service Precautions" in Section 10B.

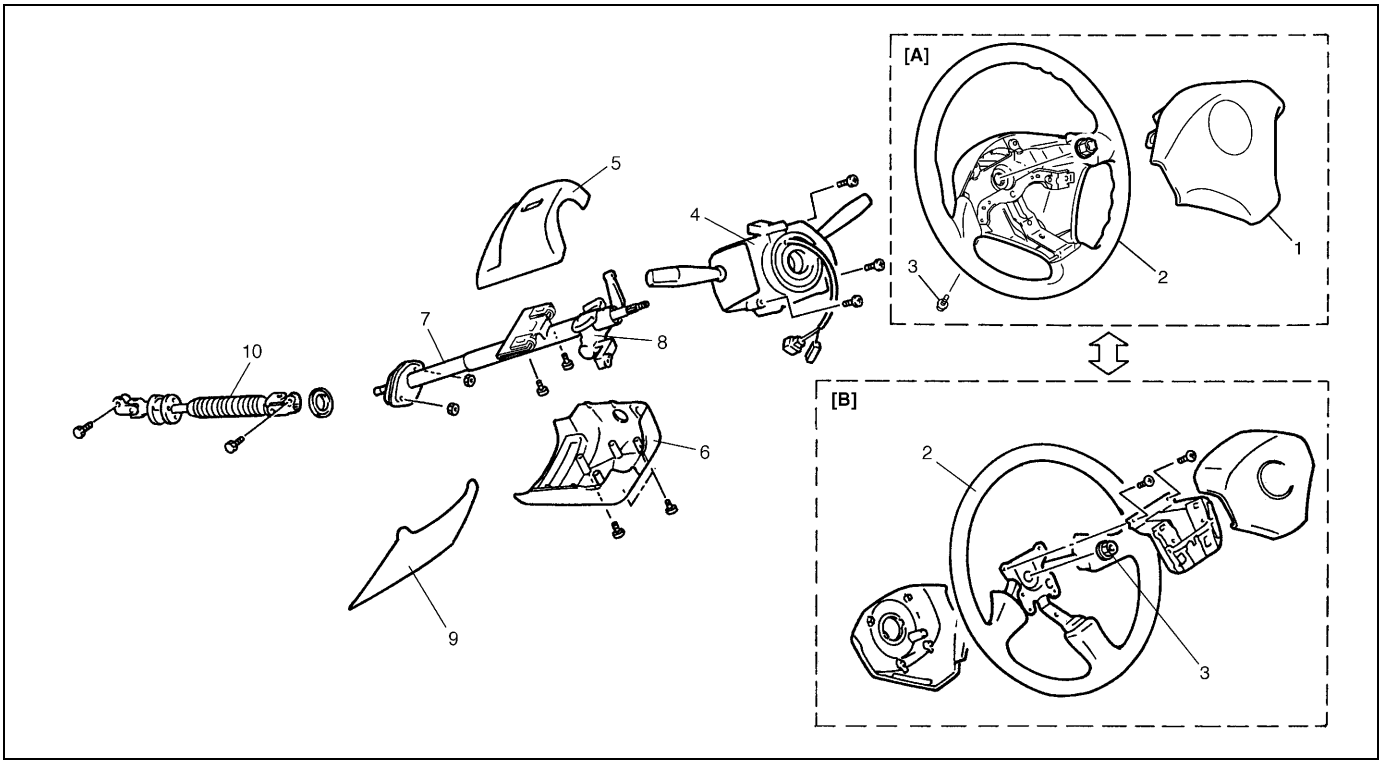

1. Driver air bag (inflator) module	5. Steering column upper cover	9. Steering column hole cover
2. Steering wheel	6. Steering column lower cover	10. Steering lower shaft
3. Steering wheel nut	7. Steering column assembly	[A] : For vehicle with air bag system
4. Combination switch or contact coil and combination switch assembly	8. Steering lock assembly (ignition switch)	[B] : For vehicle without air bag system

On-Vehicle Service

Drive Air Bag (Inflator) Module (For Vehicle with Air Bag System)

WARNING:

When handling an air bag (inflator) module, be sure to read "Service Precautions" given earlier in this section and observe each instruction. Failure to follow them could cause a damage to the air bag (inflator) module or result in personal injury.

Removal

1) Disconnect negative battery cable at battery.
2) Disable air bag system. Refer to "Disabling Air Bag System" in Section 10B.

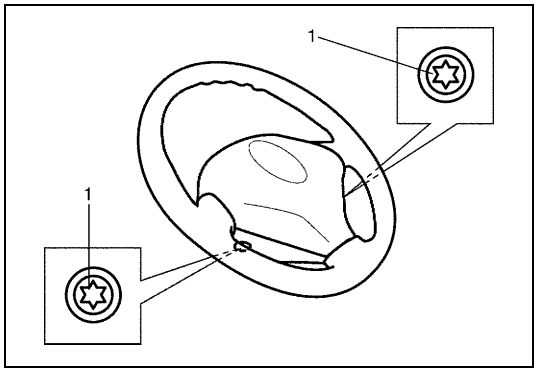

3) Loosen 2 bolts (1) mounting driver air bag (inflator) module on its both side.

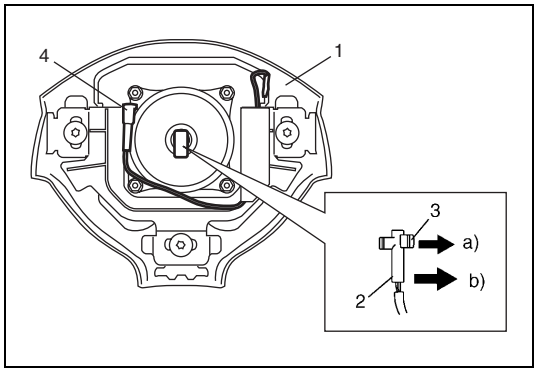

4) Remove driver air bag (inflator) module (1) from steering wheel.
5) Disconnect driver air bag (inflator) module connector (2) from driver air bag (inflator) module as follows.
   a) Unlock lock button (3).
   b) Disconnect connector.
6) Disconnect horn connector (4)

Inspection

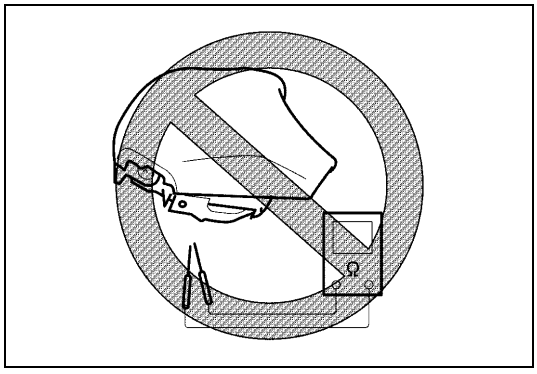

WARNING:

Never disassemble driver air bag (inflator) module or measure its resistance. Otherwise, personal injury may result.

CAUTION:

If air bag (inflator) module was dropped from a height of 90 cm (3 ft) or more, it should be replaced.

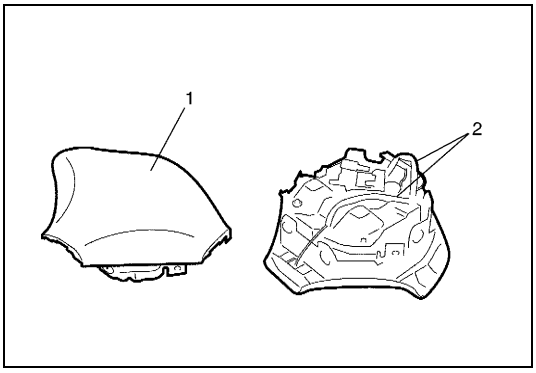

Check air bag (inflator) module visually and if any of the following is found, replace it with a new one.

- Air bag being deployed
- Trim cover (pad surface) (1) being cracked
- Wire harness or connector (2) being damaged
- Air bag (inflator) module being damaged or having been exposed to strong impact (dropped)

Installation

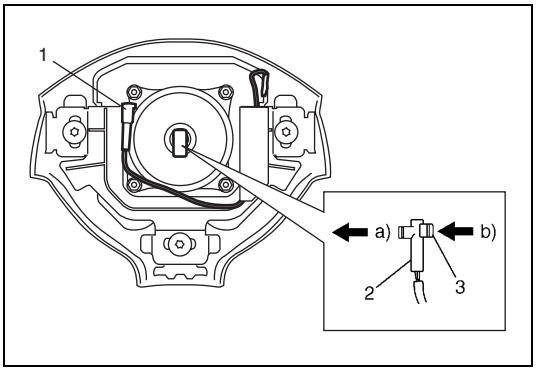

1) Check that horn wire is connected to horn connector (1) securely.
2) Connect driver air bag (inflator) module connector (2) to driver air bag (inflator) module as follows.
   a) Connect driver air bag (inflator) module connector.
   b) Lock connector with lock button (3).
3) Install driver air bag (inflator) module to steering wheel, taking care so that no part of wire harness is caught between them.
4) Make sure that clearance between module and steering wheel is uniform all the way.

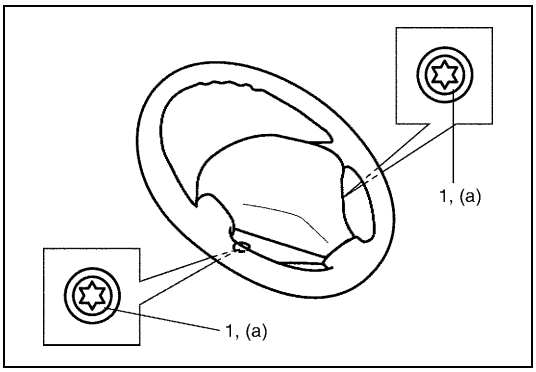

5) Tighten driver air bag (inflator) module mounting bolts (1) to specified torque.

Tightening torque
Driver air bag (inflator) module mounting bolts
(a) : 9 N·m (0.9 kg-m, 6.5 lb-ft)

6) Connect negative cable to battery.
7) Enable air bag system. Refer to “Enabling Air Bag System” under “Service Precautions” in Section 10B.

Centering contact coil (for vehicle with air bag system)

1) Check that vehicle’s wheels (front tires) are set at straight-ahead position.
2) Check that ignition switch is at “LOCK” position.

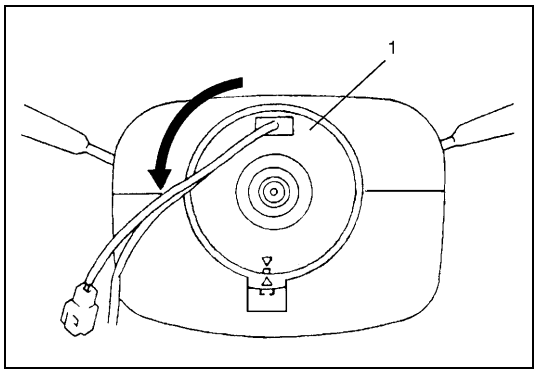

3) Turn contact coil (1) counterclockwise slowly with a light force till contact coil will not turn any further.

NOTE:

Contact coil can turn about 5 turns at maximum, that is, if it is at the center position, can turn about two and a half turns both clockwise and counterclockwise.

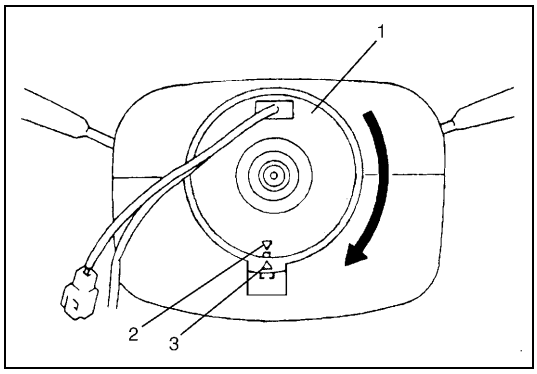

4) From the position where contact coil (1) became unable to turn any further (it stopped), turn it back clockwise about two and a half rotations and align center mark (2) with alignment mark (3).

Combination Switch (For Vehicle without Air Bag System)/Contact Coil and Combination Switch Assembly (For Vehicle with Air Bag System)

CAUTION:

For vehicle with air bag system

Do not turn contact coil (on combination switch) more than allowable number of turns (about two and a half turns from the center position clockwise or counter-clockwise respectively), or coil will break.

Removal

1) Remove steering wheel from steering column referring to “Steering Wheel” in this section.

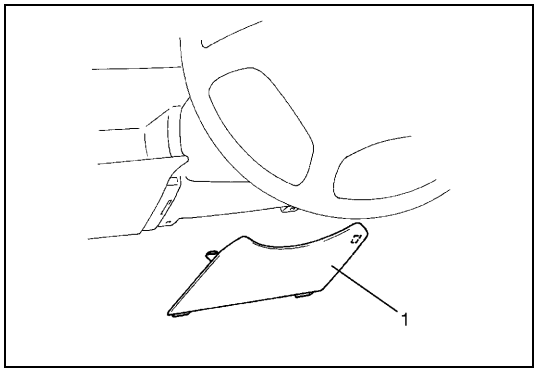

2) Remove steering column hole cover (1).

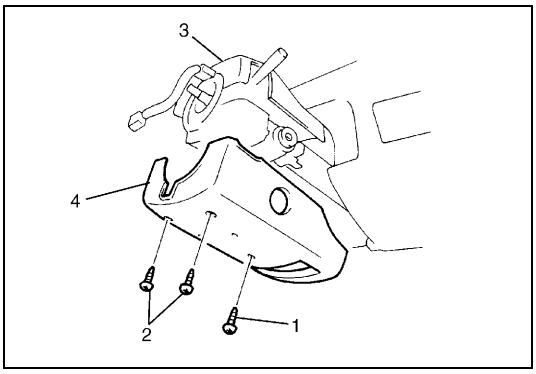

3) Remove steering column cover standard screw (1) and tapping screws (2).
4) Loosen steering column mounting bolts and nuts referring to “Steering Column” in this section.
5) Separate upper cover (3) and lower cover (4), then remove them.

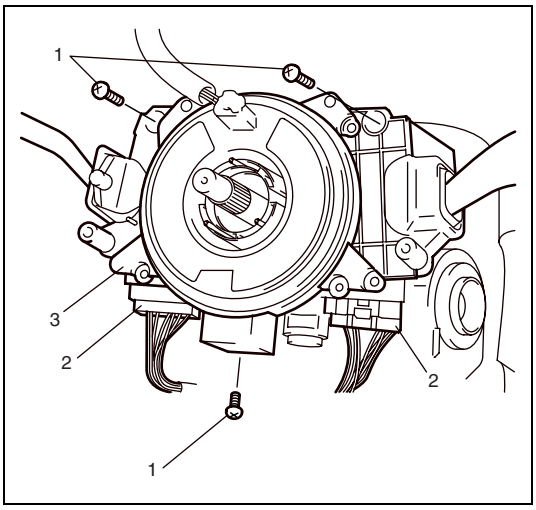

6) Disconnect all connectors (2) for combination switch / contact coil and combination switch assembly.
7) Remove screws (1) from combination switch / contact coil and combination switch assembly.
8) Remove combination switch / contact coil and combination switch assembly (3) from steering column.

Inspection

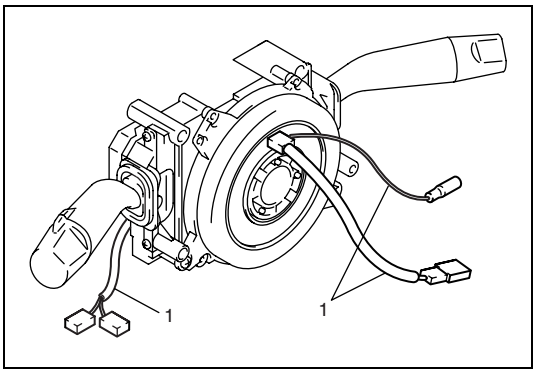

- For vehicle with air bag system
  Check contact coil and combination switch wire harness (1) for any signs of scorching, melting or other damage. If it is damaged, replace.

Installation

1) Check to make sure that vehicle’s front tires are set at straight-ahead position and then ignition switch is at “LOCK” position.

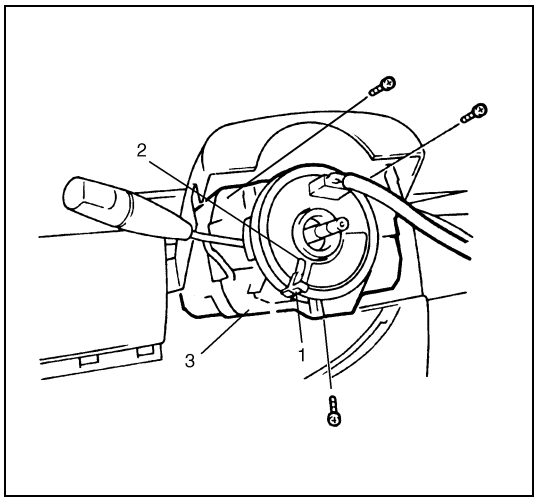

2) Install combination switch/contact coil and combination switch assembly (3) to steering column.

NOTE:

For vehicle with air bag system

New contact coil and combination switch assembly is supplied with contact coil set and held at its center position with a lock pin (2) and seal (1). Remove this lock pin after installing contact coil and combination switch assembly to steering column.

3) Connect all connectors that have been disconnected in "REMOVAL".

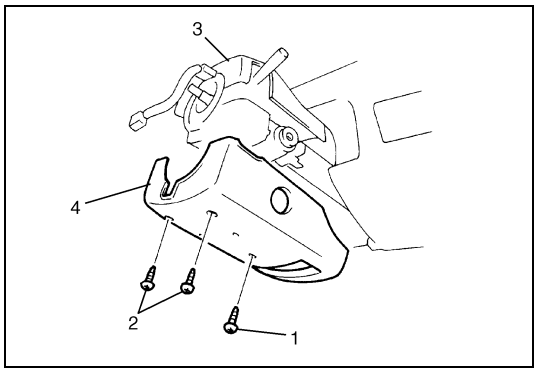

4) Install steering column upper (3) and lower cover (4), and then tighten steering column cover standard screw (1) and tapping screws (2).

CAUTION:

When installing lower cover (3) and upper cover (2), be careful so that combination switch/contact coil and combination switch lead wire is not caught between covers.

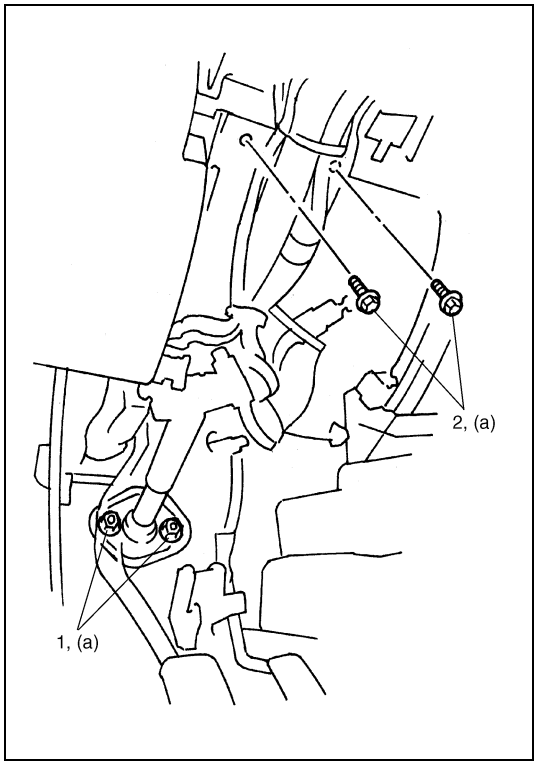

5) Tighten steering column mounting nuts and bolts by hand and then tighten mounting nuts (1) first, and then tighten mounting bolts (2).

Tightening torque

Steering column mounting bolts and nuts

(a) : 14 N·m (1.4 kg-m, 10.5 lb-ft)

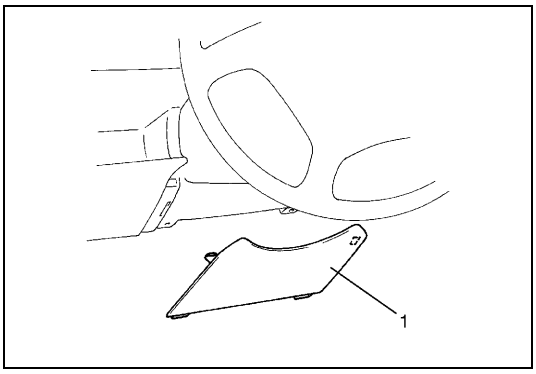

6) Install steering column hole cover (1).
7) Install steering wheel to steering column referring to “Steering Wheel” in this section.

Steering Column Assembly

CAUTION:

Once the steering column is removed from the vehicle, the column is extremely susceptible to damage.

- **Dropping the column assembly on its end could collapse the steering shaft or loosen the plastic shear pins which maintain column length.**
- **Leaning on the column assembly could cause it to bend or deform.**

Any of the above damage could impair the column’s collapsible design.

NOTE:

When servicing steering column or any column-mounted component, remove steering wheel. But when removing steering column simply to gain access to instrument panel components, leave steering wheel installed on steering column.

Removal

WARNING:

For vehicle with air bag system

Never rest a steering column assembly on the steering wheel with the air bag (inflator) module face down and column vertical. Otherwise, personal injury may result.

1) Disconnect negative battery cable at battery.
2) For vehicle equipped with air bag system, disable air bag system referring to “Disabling Air Bag System” in Section 10B.
3) If necessary, remove steering wheel and combination switch assembly referring to “Steering Wheel” and “Combination switch/Contact Coil and Combination Switch Assembly” in this section.

   If not removing steering wheel and/or combination switch assembly, perform the following procedure.

a) Turn steering wheel so that vehicle's front tires are at straight ahead position.
b) Turn ignition switch to "LOCK" position and remove key.

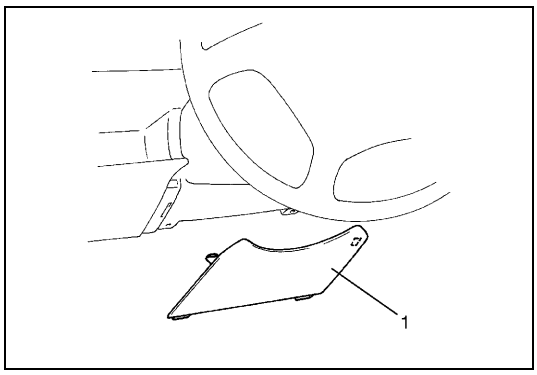

4) Remove steering column hole cover (1).

5) Disconnect all connectors of the following parts.
- Combination switch/contact coil and combination switch assembly.
- Ignition switch.
- Immobilizer control system parts (if equipped).

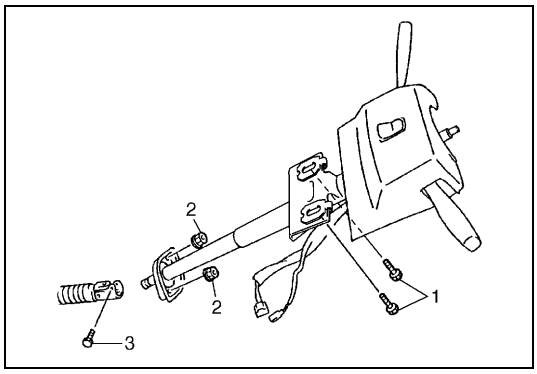

6) Remove joint bolt (steering column side) (3) and loosen joint bolt (steering gear box side).
7) Remove steering column mounting nuts (2) and bolts (1).

8) If equipped with shift (key) interlock cable, remove shift (key) interlock cable referring to "Interlock Cable (If Equipped)" in Section 7B.

9) Remove steering column from vehicle.

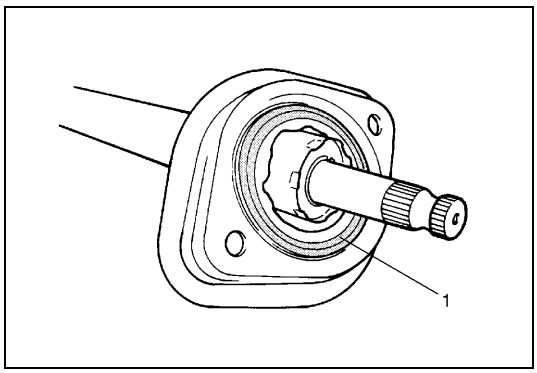

10) Remove steering column seal (1) from steering column lower bracket.

CAUTION:

Don't separate double tube type steering column assembly into steering column and shaft. If column or shaft is defective, replace as and assembly.

Inspection

NOTE:

Vehicles involved in accidents resulting in body damage, where steering column has been impacted (or air bag deployed), may have a damaged or misaligned steering column.

Checking Procedure

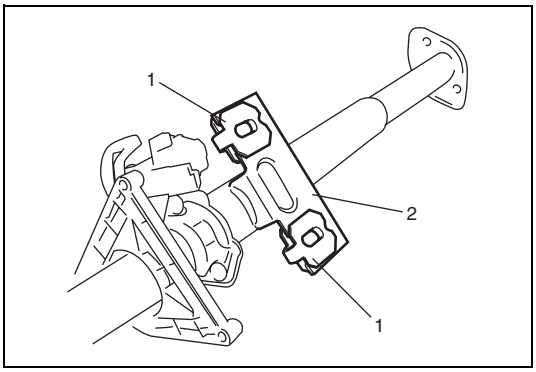

1) Check that two capsules (1) are attached to steering column bracket (2) securely. Check clearance between capsules and steering column bracket. Clearance should be 0.0 mm (0.0 in.) on both sides.
   If found loose or clearance, replace steering column assembly.

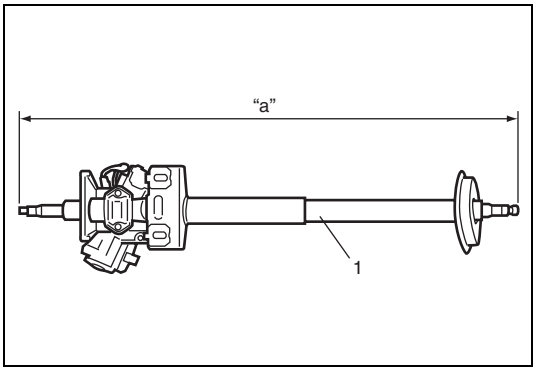

2) Take measurement "a" as shown.
   If it is shorter than specified length, replace column assembly (1) with new one.

   Steering column assembly length
   "a" : 733.2 – 734.8 mm (28.87 – 28.93 in.)

3) Check steering shaft joints and shaft for any damages such as crack, breakage, malfunction or excessive play.
   If anything is found faulty, replace as lower joint assembly or column assembly.
4) Check steering shaft for smooth rotation.
   If found defective, replace as column assembly.
5) Check steering shaft and column for bend, cracks or deformation.
   If found defective, replace.

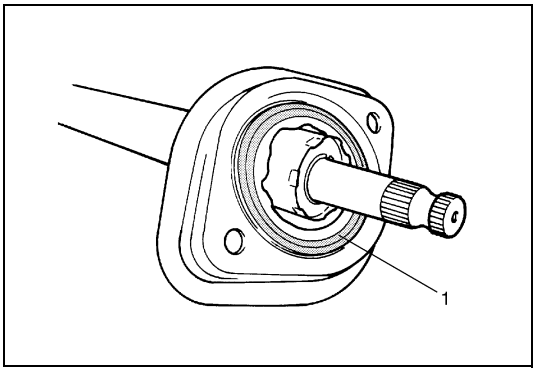

6) Check steering column lower seal (1) for breakage or deformation. If found defective, replace.

Installation

CAUTION:
After tightening steering column mounting bolts and nuts shaft joint bolts should be tightened.

1) Be sure that front wheels and steering wheel are in straight forward state.

2) If equipped, install shift (key) interlock cable to ignition switch referring to “Interlock Cable” (If Equipped)” in Section 7B.

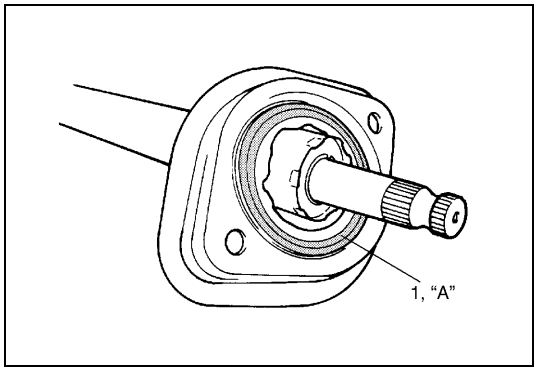

3) Apply sealant to the steering column lower bracket (shaded section in the figure) and fit the steering column seal (1) to the stepped part of the steering column lower bracket securely.

“A” : Sealant 99000-31090

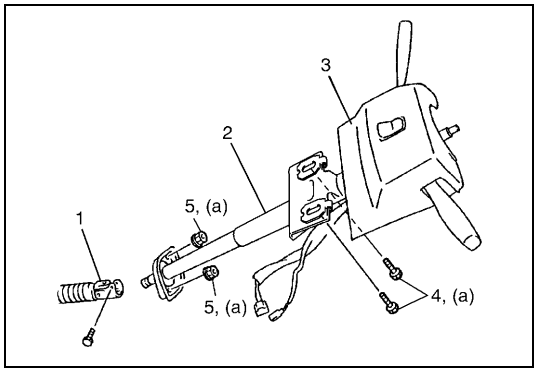

4) Insert steering lower shaft (1) to steering shaft.
5) Put the steering column upper cover (3) on top of the steering column (2), if necessary and then tighten steering column mounting nuts (5) and bolts (4) by hand.
6) Tighten mounting nuts (5) first and then mounting bolts (4) to specified torque.

Tightening torque
Steering column mounting bolts and nuts
(a) : 14 N·m (1.4 kg-m, 10.5 lb-ft)

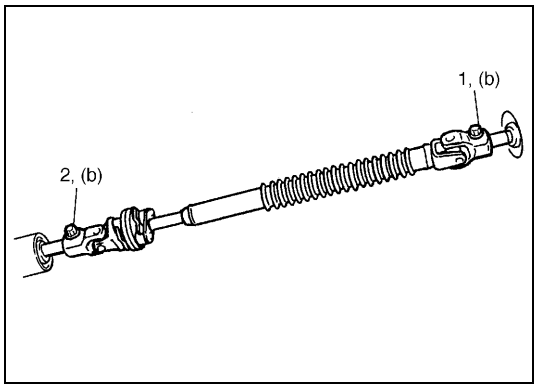

7) Tighten steering column side joint bolt (1) first, and then tighten steering gear box side joint bolt (2).

Tightening torque
Steering shaft joint bolts (b) : 25 N·m (2.5 kg-m, 18.0 lb-ft)

8) If combination switch is removed, install combination switch referring to “Combination Switch/Contact Coil and Combination Switch Assembly” in this section.
9) Connect all connectors that have been removed in “removal”.

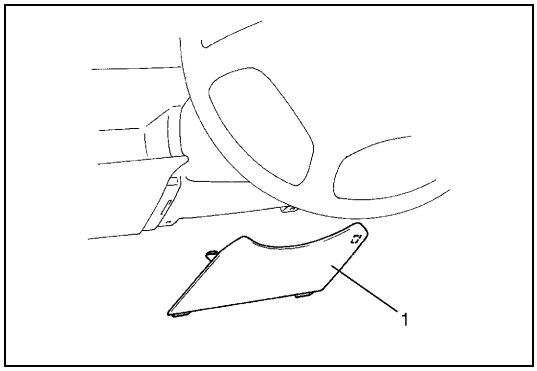

10) Install steering column hole cover (1).
11) If steering wheel is removed, install steering wheel referring to “Steering Wheel” in this section.
12) If the vehicle equipped with air bag system, enable air bag system referring to “Enabling Air Bag System” in Section 10B.
13) Connect negative cable to battery.

Checking Steering Column for Accident Damage

NOTE:

Vehicles involved in accidents resulting in body damage, where steering column has been impacted (or air bag deployed) may have a damaged or misaligned steering column.

Checking Procedure

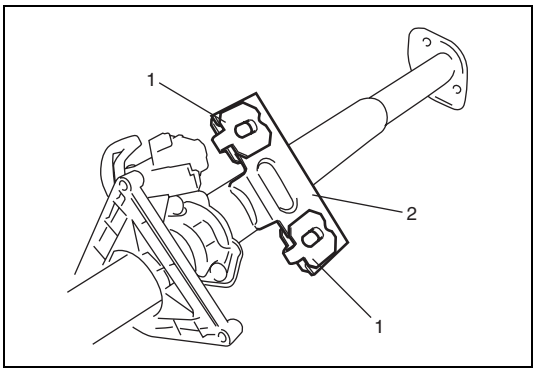

1) Check that two capsules (1) are attached to steering column bracket (2) securely. Check clearance between capsules (1) and steering column bracket (2). Clearance should be 0.0 mm (0.0 in.) on both sides.
   If found loose or clearance, replace steering column assembly.

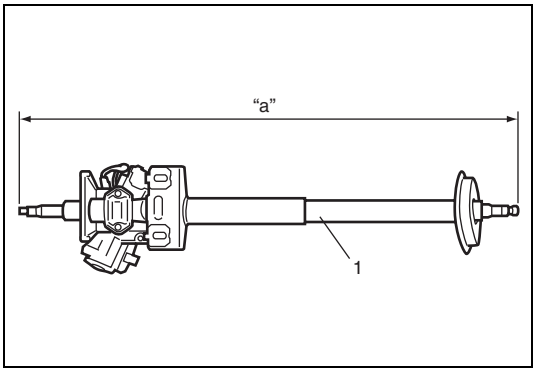

2) Take measurement "a" as shown.
   If it is shorter than specified length, replace column assembly (1) with new one.

   Steering column assembly length
   "a" : 733.2 – 734.8 mm (28.87 – 28.93 in.)

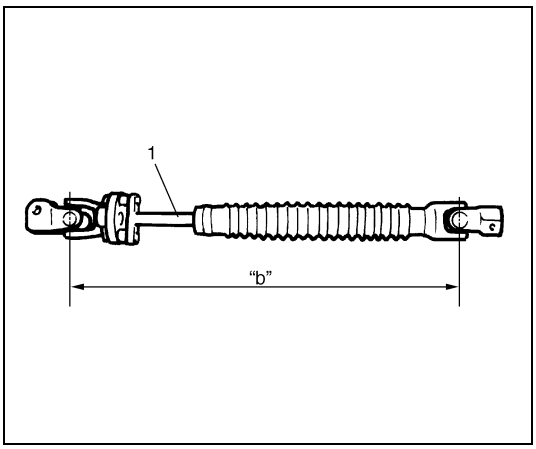

3) Check if steering lower shaft (1) is with in specified length.
   If it is out of specified length, replace it with new one.

   Steering lower shaft length
   "b" : 475.3 – 477.3 mm (18.72 – 18.79 in.)
   (For LH steering vehicle without P/S system)
   438.3 – 440.3 mm (17.26 – 17.33 in.)
   (For RH steering vehicle without P/S system)
   431.2 – 433.2 mm (16.98 – 17.05 in.)
   (For LH steering vehicle with P/S system)
   393.6 – 395.6 mm (15.50 – 15.57 in.)
   (For RH steering vehicle with P/S system)

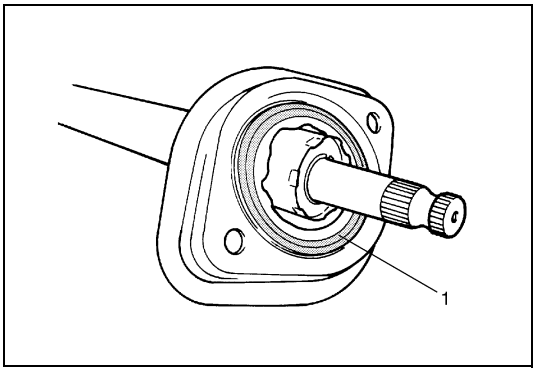

4) Check steering column lower seal (1) for breakage or deformation.
   If found defective, replace.

5) Check steering shaft joints and shaft for any damages such as crack, breakage, malfunction or excessive play.
   If anything is found faulty, replace as lower joint assembly or column assembly.
6) Check steering shaft for smooth rotation.
   If found defective, replace as column assembly.
7) Check steering shaft and column for bend, cracks or deformation.
   If found defective, replace.

SECTION 3D

FRONT SUSPENSION

WARNING:

- **When hoisting vehicle, be sure to select the lifting point suitable for the service work referring to "Vehicle Lifting Points" in Section 0A.**
- **For vehicles equipped with a Supplement Restraint (Air Bag) System:**
  - **Service on and around the air bag system components or wiring must be performed only by an authorized SUZUKI dealer. Refer to "Air Bag System Components and Wiring Location View" under "General Description" in air bag system section in order to confirm whether you are performing service on or near the air bag system components or wiring. Please observe all WARNINGS and "Service Precautions" under "On-Vehicle Service" in air bag system section before performing service on or around the air bag system components or wiring. Failure to follow WARNINGS could result in unintentional activation of the system or could render the system inoperative. Either of these two conditions may result in severe injury.**
  - **Technical service work must be started at least 90 seconds after the ignition switch is turned to the "LOCK" position and the negative cable is disconnected from the battery. Otherwise, the system may be activated by reserve energy in the Sensing and Diagnostic Module (SDM).**

NOTE:

- **All front suspension fasteners are an important attaching part in that it could affect the performance of vital parts and systems, and/or could result in major repair expense. They must be replaced with one of the same part number or with an equivalent part if replacement becomes necessary. Do not use a replacement part of lesser quality or substitute design. Torque values must be used as specified during reassembly to assure proper retention of this part.**
- **Never attempt to heat, quench or straighten any front suspension part. Replace it with a new part or damage to the part may result.**
- **For the items with asterisk (*) in the "CONTENTS" below, refer to the same section of the Service Manual mentioned in "FOREWORD" of this Manual.**

CONTENTS

General Description 3D-3
4WD Control System (Air Locking Hub Control System) 3D-3
Diagnosis 3D-9
Diagnosis Table 3D-9
4WD Controller and its Circuit Check..... 3D-12
4WD Control System Check 3D-13
Stabilizer bar / bushing check ..... 3D- *
Shock Absorber and/or Coil Spring Check ..... 3D- *
Leading Arm / Lateral Rod / Steering Knuckle Check ..... 3D- *
Leading Arm Bushing / Lateral Rod Bushing Check ..... 3D- *
Kingpin / Kingpin Bearing Check..... 3D- *
Barfield Joint Check ..... 3D- *
Steering Knuckle Seal Check ..... 3D- *
Wheel Disc, Nut and Bearing Check..... 3D- *
On-Vehicle Service ..... 3D- *
Stabilizer Bar / Bushings..... 3D- *
Front Shock Absorber ..... 3D- *
Coil Spring ..... 3D- *
Bump Stopper and Spring Upper Seat ..... 3D- *
Wheel Hub / Bearing / Oil Seal ..... 3D- *
Steering Knuckle / Wheel Spindle..... 3D- *
Front Axle Shaft / Oil Seal / Kingpin Bearing Outer Race ..... 3D- *
Steering Knuckle Seal..... 3D- *
Lateral Rod ..... 3D- *
Leading Arm / Bushing..... 3D- *
Front Axle Housing ..... 3D- *

Tightening Torque Specifications ..... 3D- *
Required Service Material ..... 3D- *
Special Tool 3D-16

General Description

Front Wheel Hub Components

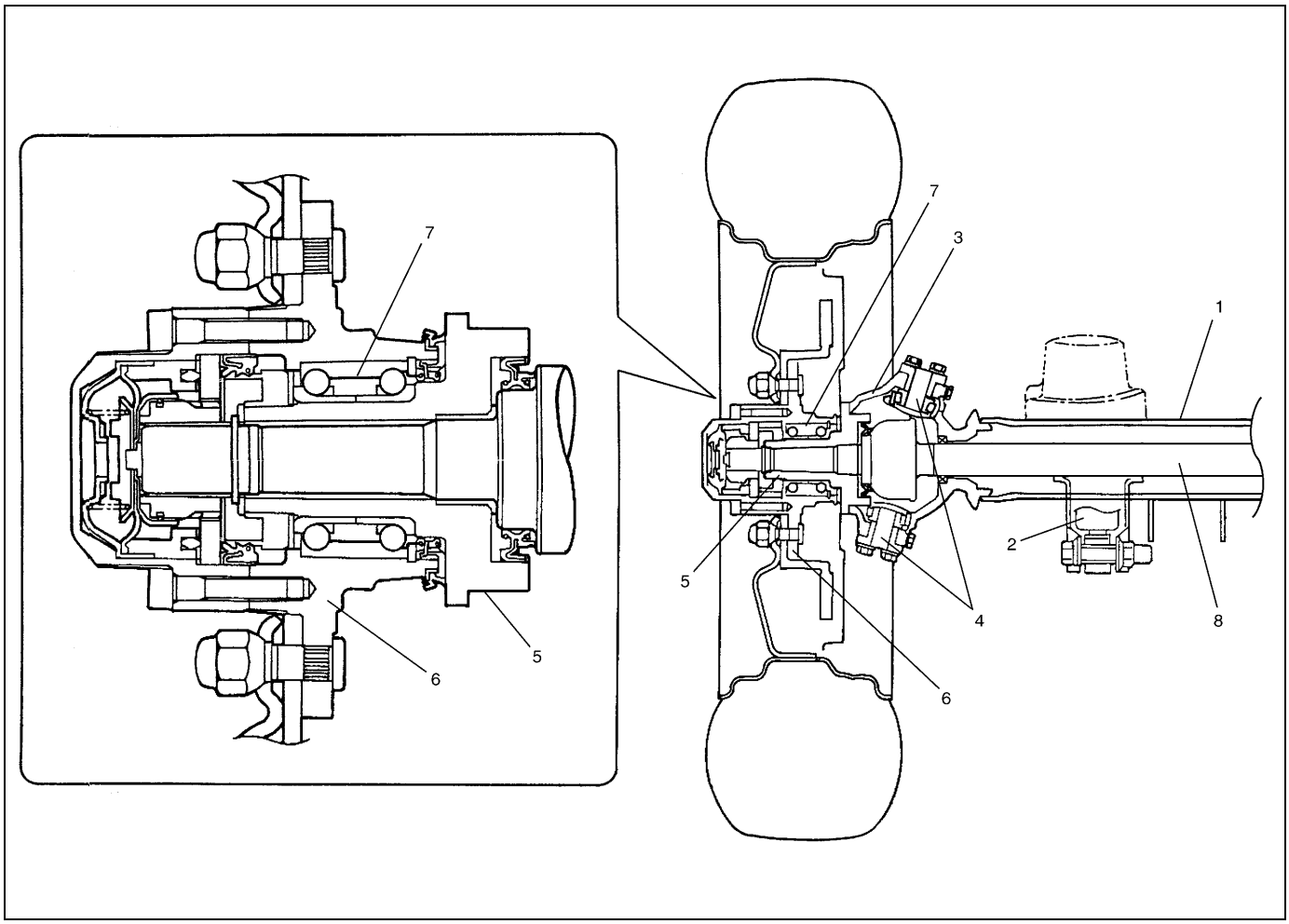

1. Front axle housing	3. Steering knuckle	5. Wheel spindle	7. Wheel bearing
2. Shock absorber	4. Kingpin	6. Wheel hub	8. Front axle shaft

4WD Control System (Air Locking Hub Control System)

The 4WD control system consists of a 4WD switch, a 4WD controller, a vacuum switch, a vacuum tank (for M13 engine model), a vacuum pump (for K9K engine model), two vacuum switching valves (VSV1 and VSV2) and air locking hub assemblies.

The 4WD controller controls locking or unlocking of the air locking hub according to the signal from the 4WD switch installed in the transfer.

- For M13 engine, vacuum generated in the intake manifold passes through the check valve and stored in the vacuum tank.
- For K9K engine, vacuum generated by vacuum pump passes through the vacuum control valve which regulate vacuum pressure.

According to signals from the 4WD switch, the 4WD controller activates VSV1 (for unlocking) or VSV2 (for locking) to apply vacuum to wheel hub from the vacuum tank or pump so that the front axle and the wheel hub are disengaged or engaged.

4WD Control System Components

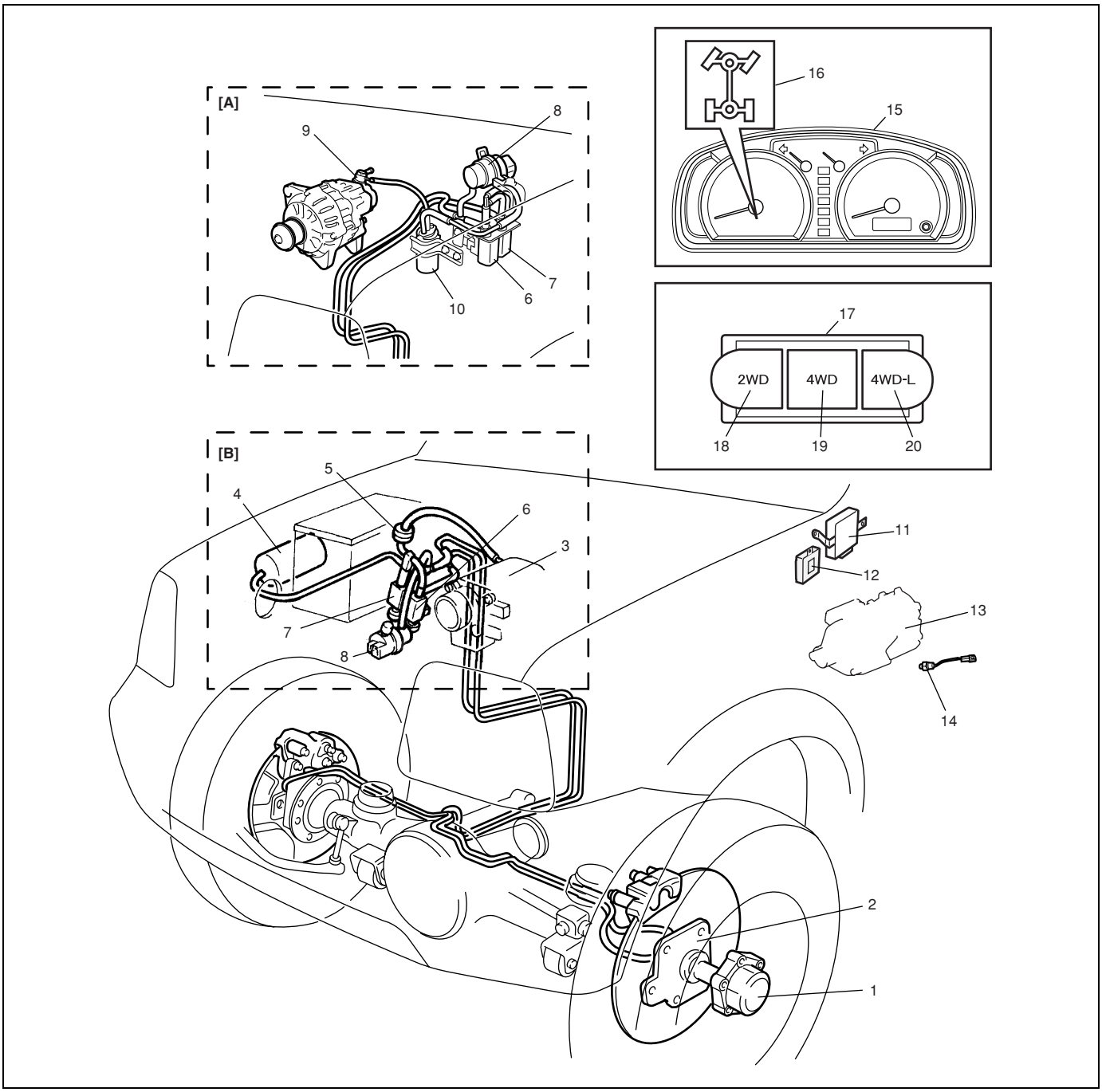

[A]: For K9K engine model	5. Check valve	11. Transfer control module	17. 2WD / 4WD switch
[B]: For M13 engine model	6. VSV1	12. 4WD controller	18. “2WD” switch
1. Air locking hub assembly	7. VSV2	13. Transfer	19. “4WD” switch
2. Wheel spindle	8. Vacuum switch	14. 4WD switch	20. “4WD-L” switch
3. Intake manifold	9. Vacuum pump with generator	15. Combination meter	
4. Vacuum accumulation tank	10. Vacuum control valve	16. 4WD indicator	

System Circuit

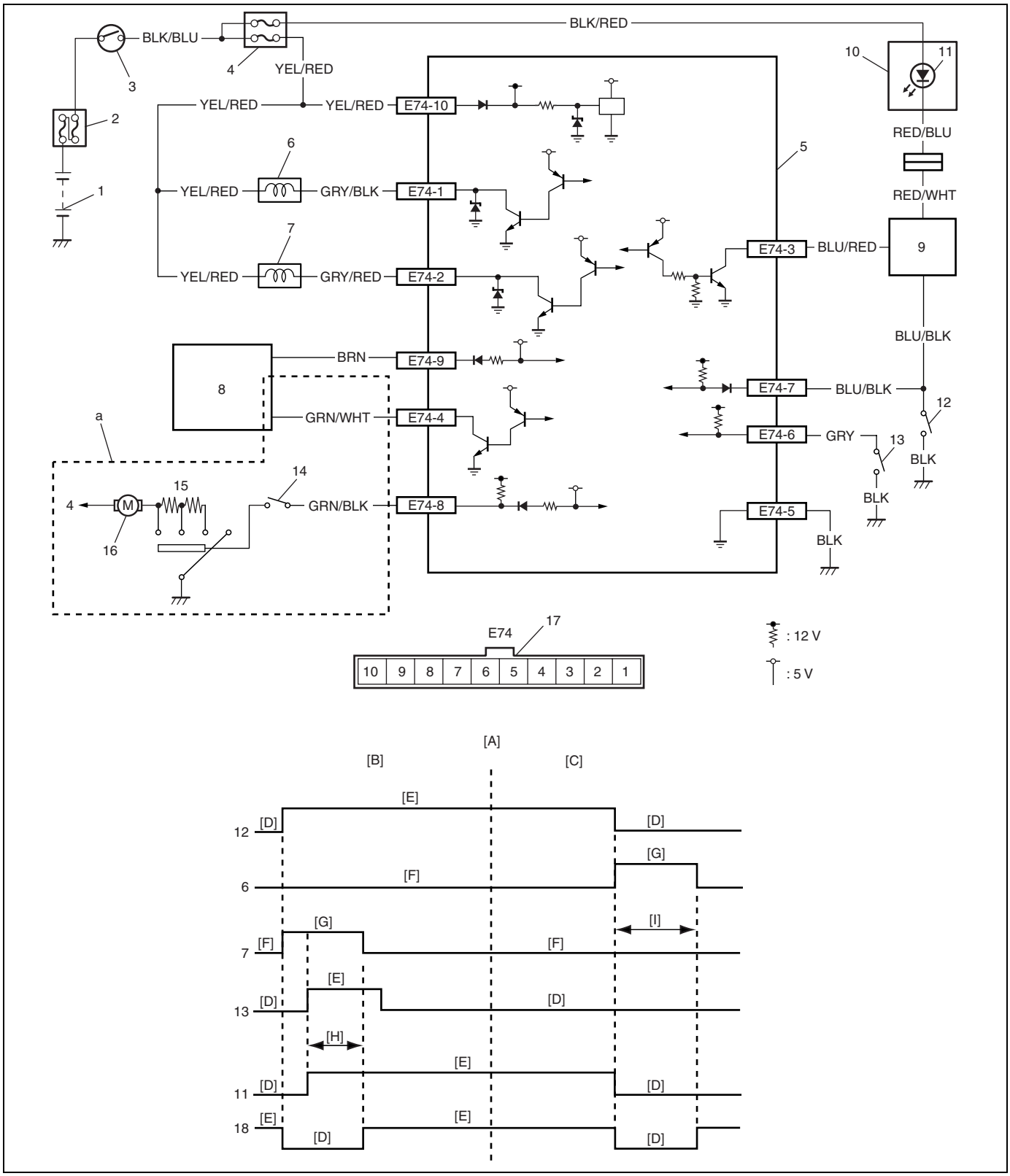

[A]: Operation	[H]: 5 sec.	5. 4WD controller	12. 4WD switch
[B]: 2WD → 4WD	[I]: 10 sec.	6. VSV1	13. Vacuum switch
[C]: 4WD → 2WD	a: M13 engine model only	7. VSV2	14. A/C switch (if equipped)
[D]: OFF	1. Battery	8. ECM	15. Blower fan switch
[E]: ON	2. Main fuse box	9. Transfer control module	16. Blower fan motor
[F]: CLOSE	3. Ignition switch	10. Combination meter	17. Coupler of 4WD controller (viewed from harness side)
[G]: OPEN	4. Circuit fuse box	11. 4WD indicator	18. A/C cut (When A/C switch ON and blower fan switch ON)

Components and Functions

Component	Function
4WD switch	When the transfer is shifted to 4H position from 2H position, 4WD switch turns ON and sends the “ON” signal to the 4WD controller.
4WD controller	When the 4WD switch turns on, the 4WD controller activates VSV2 to lock the air locking hubs and when it receives an “ON” signal from the vacuum switch, it makes VSV2 to complete operation within 5 seconds and turns on the 4WD indicator via the transfer control module. If vacuum in the vacuum circuit fails to reach the specified level due to a leakage in the vacuum circuit (when no “ON” signal is inputted from the vacuum switch), the 4WD controller stops operation of VSV2 in 15 seconds and flashes the 4WD indicator via the transfer control module. When the 4WD switch turns off, the 4WD controller activates VSV1 for 10 seconds to unlock the hubs and turns off the 4WD indicator via the transfer control module.
Transfer control module	Refer to “Function of Transfer System Component” in Section 7D.
VSV1	VSV1 operates according to the signal from the 4WD controller. When it is activated, the port opens and vacuum is applied through the vacuum circuit to unlock to the slide gear in the air locking hub. As a result, the air locking hubs are free.
VSV2	VSV2 operates according to the signal from the 4WD controller. When it is activated, the port opens and vacuum is applied through the vacuum circuit to lock to the slide gear in the air locking hub. As a result, the air locking hubs are locked.
Vacuum switch	When the 4WD controller receives the “ON” signal from the 4WD switch, the vacuum is applied through VSV2 to the vacuum switch. The vacuum switch turns on when it detects vacuum exceeding –36 kPa (–5.22 psi).
“4WD” indicator	It turns on according to the signal from the 4WD controller and the transfer control module. For details, refer to above-mentioned “4WD Controller” and “Indicator and Buzzer Operation” in Section 7D.
Vacuum pump (K9K engine only)	This vacuum pump is installed in the generator, and driven with the engine through the generator drive belt. 4WD control system and brake booster operate by the vacuum made with the vacuum pump.
Vacuum control valve (K9K engine only)	The vacuum made with the vacuum pump is adjusted to appropriate vacuum. As a result, 4WD control system is prevented being damaged by excessive vacuum.

Operation

2WD → 4WD

When the transfer is shifted from the 2WD (2H) position to the 4WD (4H or 4L) position, a 4WD "ON" signal (4WD switch "ON" signal) is transmitted to the 4WD controller which then activates VSV2 to apply vacuum in the intake manifold or vacuum pump to the chamber "B" in the hub housing.

When vacuum is applied, the slide gear is separated from the magnet, moves toward the center of the vehicle body and gets engaged with the outer gear. In this way, the front axle shaft and the front wheel hub rotate as one unit.

If vacuum in the circuit fails to reach –36 kPa (–5.22 psi) within 15 seconds after operation of VSV2 due to such trouble as a hole in the vacuum pipe, the slide gear does not operate and the 4WD indicator flashes to warn that the hub is unlocked via the transfer control module.

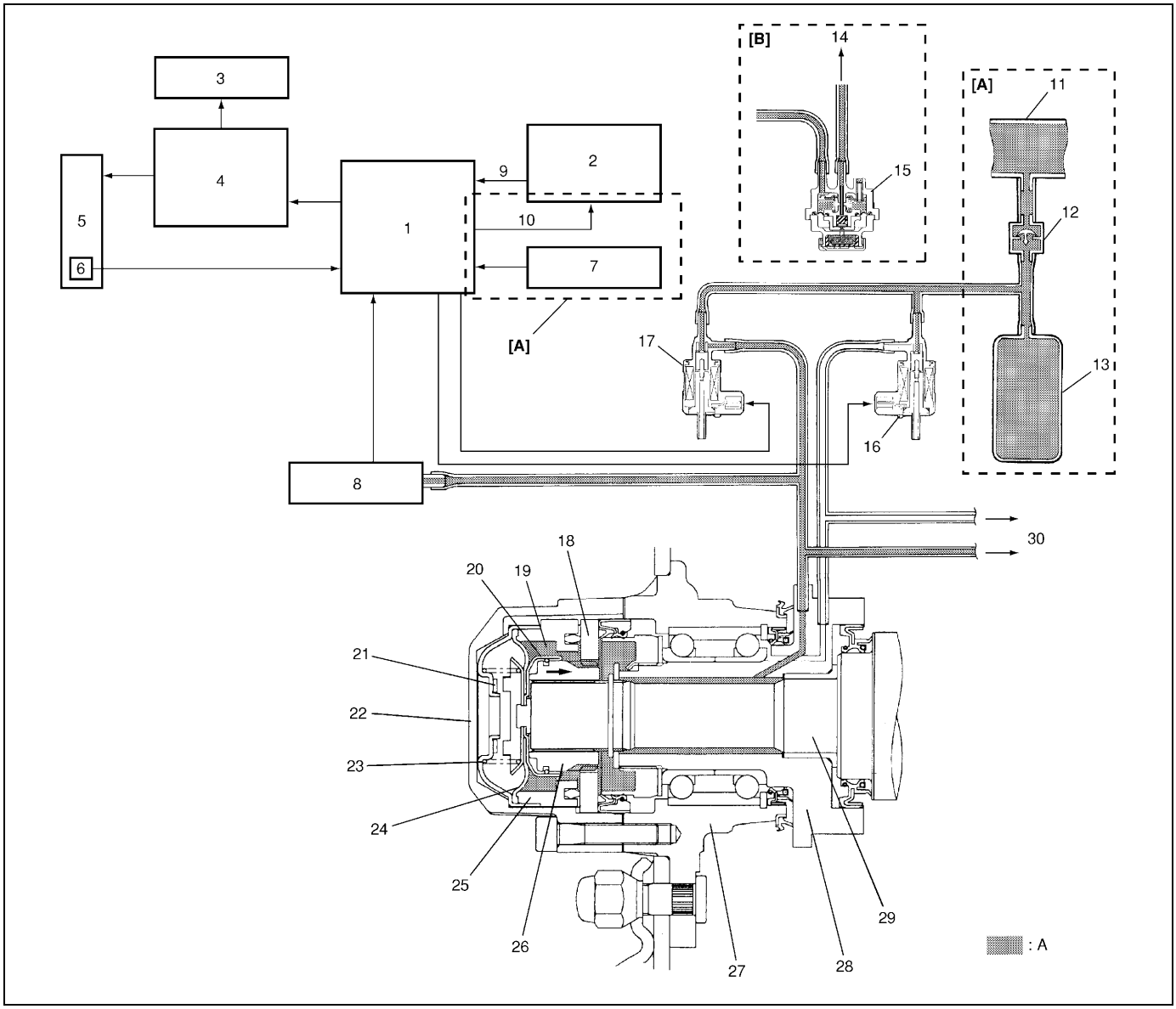

1. 4WD controller	10. A/C ON signal (if equipped)	19. Chamber "B"	28. Spindle
2. ECM	11. Intake manifold	20. Piston A	29. Front axle shaft
3. 4WD indicator	12. Check valve	21. Magnet	30. To opposite side
4. Transfer control module	13. Vacuum tank	22. Housing	A: Vacuum circuit
5. Transfer	14. To vacuum pump	23. Spring	[A]: For M13 engine model
6. 4WD switch	15. Vacuum control valve	24. Diaphragm	[B]: For K9K engine model
7. A/C switch (if equipped)	16. VSV1	25. Sleeve	
8. Vacuum switch	17. VSV2	26. Slide gear	
9. Engine revolution signal	18. Outer gear	27. Wheel hub	

4WD → 2WD

When the transfer is shifted from the 4WD (4H or 4L) to the 2WD (2H) position, the 4WD controller activates VSV1 and the intake manifold vacuum or vacuum from vacuum pump is applied to the chamber “A” in the hub housing. As the slide gear is shifted to the wheel side by the vacuum force and disengaged from the outer gear, rotation of the front wheel hub is not transmitted to the front axle shaft.

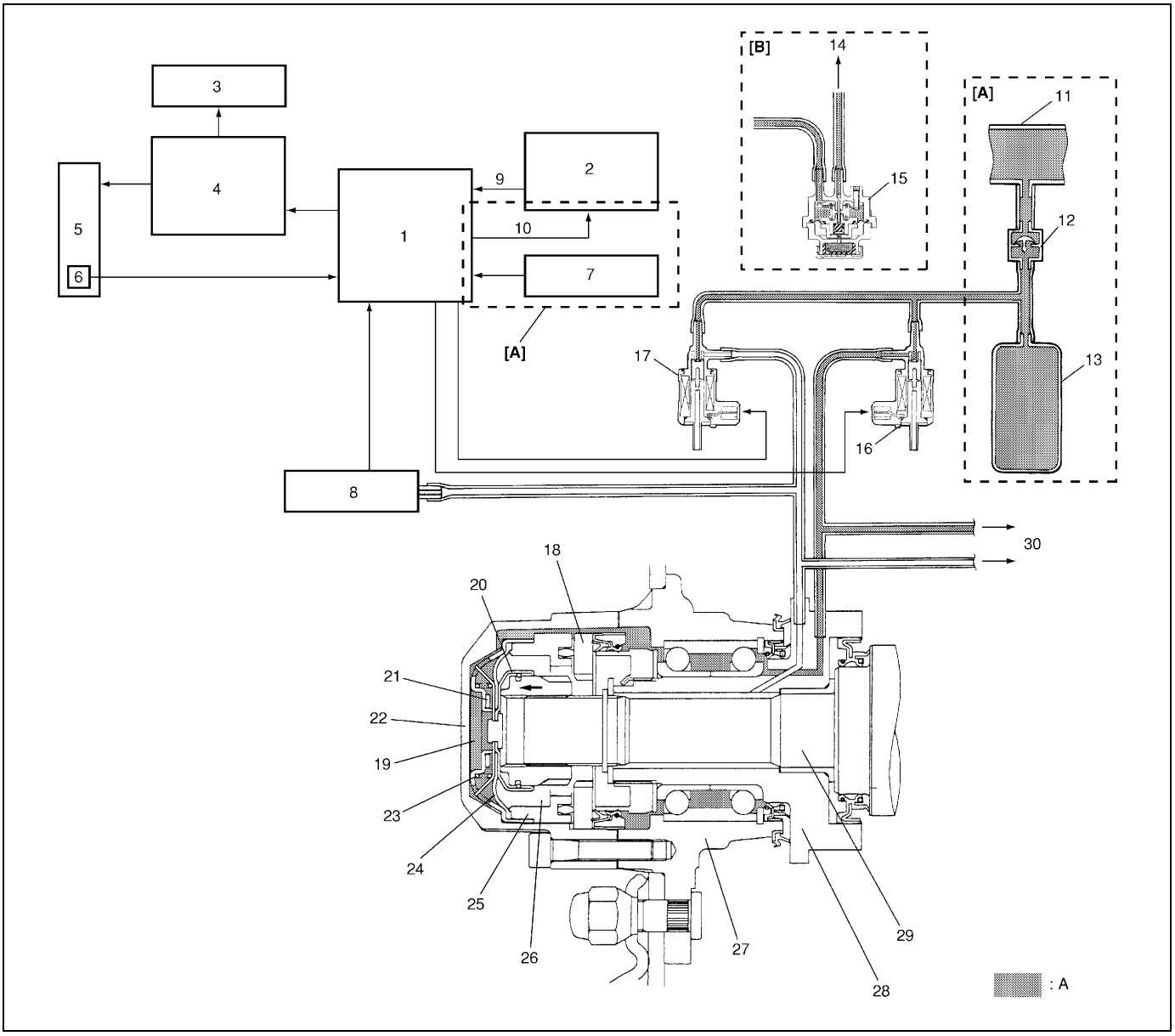

1. 4WD controller	10. A/C ON signal (if equipped)	19. Chamber “A”	28. Spindle
2. ECM	11. Intake manifold	20. Piston A	29. Front axle shaft
3. 4WD indicator	12. Check valve	21. Magnet	30. To opposite side
4. Transfer control module	13. Vacuum tank	22. Housing	A: Vacuum circuit
5. Transfer	14. To vacuum pump	23. Spring	[A]: For M13 engine model
6. 4WD switch	15. Vacuum control valve	24. Diaphragm	[B]: For K9K engine model
7. A/C switch (if equipped)	16. VSV1	25. Sleeve	
8. Vacuum switch	17. VSV2	26. Slide gear	
9. Engine revolution signal	18. Outer gear	27. Wheel hub	

Diagnosis

Diagnosis Table

For description not found in the table below, refer to “Diagnosis Table” in Section 3.

4WD Control System

Condition	Possible Cause	Correction
4WD Indicator flashing	• Transfer control system faulty	Refer to “Indicator and Buzzer Operation” in Section 7D
	• Hub locking procedure error	Shift transfer 2WD / 4WD switch 2H → 4H once again
	• Defective VSV2	Replace
	• Defective vacuum switch	Replace
	• Defective check valve or vacuum tank	Replace
	• Air leakage from vacuum circuit	Check and repair
	• Clogged vacuum hose or pipe	Replace
	• Faulty 4WD controller	Check and replace
	• Defective vacuum pump	Check and replace
	• Faulty transfer control module	Inspect referring to “Inspection of Transfer Control Module and Its Circuit” in Section 7D
	• Defective transfer shift actuator	Inspect referring to “Transfer Shift Actuator Inspection”
Air locking hub does not become free although transfer shifts to 2WD	• Defective air locking hub assembly	Replace
	• Abnormality in 4WD control system	Inspect referring to “4WD Control System Diagnostic Flow Table”
	• Air leakage from vacuum circuit	Check and replace
	• Clogged vacuum hose or pipe	Replace
	• Defective check valve or vacuum tank	Replace
	• Defective vacuum control valve	Replace
	• Defective vacuum pump	Check and replace
	• Faulty 4WD switch	Inspect referring to “Inspection of Transfer Control Module and Its Circuit” in Section 7D

4WD Control System Diagnostic Flow Table

Before performing the trouble diagnosis, check that the air locking hub assemblies are in good condition and there is no air leakage from vacuum hoses and vacuum pipe. Refer to “4WD Control System Check” in this section for air leakage.

NOTE:

- **Be sure to read “Precautions for Electrical Circuit Service” in Section 0A before circuit inspection and observe what is written there.**
- **For system circuit, refer to the figure of “System Circuit” in this section.**

Step	Action	Yes	No
1	Check power circuit. 1) Are main fuse and circuit fuse for 4WD controller in good condition? 2) If OK, disconnect coupler from 4WD controller. 3) Turn ignition switch ON. 4) Check voltage between “E74-10” terminal and ground. Is it 10 – 14 V?	Go to Step 2.	“YEL/RED” circuit is open or short.
2	Check ground circuit. 1) Disconnect coupler from 4WD controller with ignition switch OFF. 2) Check for proper connection to 4WD controller at all terminals. 3) If OK, check continuity between E74-5 terminal and body ground. Is there continuity between E74-5 terminal and body ground?	Go to Step 3.	“BLK” wire is open.
3	Check 4WD switch circuit. 1) Connect coupler to 4WD controller. 2) Turn ignition switch ON and check voltage between “E74-7” terminal and ground. **4WD switch position is in 2H: about 10 – 14 V** **4WD switch position is in 4L or 4H: about 0 V** Is check result satisfactory?	Go to Step 4.	Check 4WD switch (refer to “4WD Switch and 4WD Low Switch Inspection” in Section 7D), “BLU/BLK” and “BLK” circuits of 4WD switch. If OK, substitute a known-good 4WD controller and recheck.
4	Check VSV1 circuit. 1) Turn ignition switch ON. 2) Check voltage between E74-1 terminal and ground. Is it 10 – 14 V when 2WD / 4WD switch is in 4H or 4L position and about 0 V for 10 seconds after it is selected 2H position?	Go to Step 5.	Check VSV1 (refer to “4WD Control System Check” in this section), “YEL/RED” and “GRY/BLK” circuits of VSV1. If OK, substitute a known-good 4WD controller and recheck.

Step	Action	Yes	No
5	Check VSV2 circuit. 1) Turn ignition switch ON. 2) Check voltage between E74-2 terminal and ground. Is it 10 – 14 V when 2WD / 4WD switch is in 2H position and about 0 V for 5 seconds after it is selected to 4H or 4L position?	Go to Step 6.	Check VSV2 (refer to "4WD Control System Check" in this section), "YEL/RED" and "GRY/RED" circuits of VSV2. If OK, substitute a known-good 4WD controller and recheck.
6	Check vacuum switch circuit. 1) Turn ignition switch ON (stating engine). 2) Check voltage between E74-6 terminal and ground. Is it 10 – 14 V when 2WD / 4WD switch is in 2H position and about 0 V for 5 seconds after it is selected to 4H or 4L position?	Go to Step 7.	Check vacuum switch (refer to "4WD Control System Check" in this section), "GRY" and "BLK" circuits of vacuum switch. If OK, substitute a known-good 4WD controller and recheck.
7	Check 4WD indicator circuit. 1) Turn ignition switch ON. 2) Check voltage between "E74-3" terminal and ground. Is it 10 – 14 V when transfer is at 2H position and about 0 V when transfer is at 4H / 4L position?	Substitute a known-good 4WD controller and recheck.	Check "BLU", "RED/WHT" and "RED/BLU" circuit (including indicator light and combination meter refer to "Combination Meter" in Section 8), and then check transfer control system referring to "Transfer Control System Check" in Section 7D. If OK, substitute a known-good 4WD controller and recheck.

4WD Controller and its Circuit Check

Voltage Check

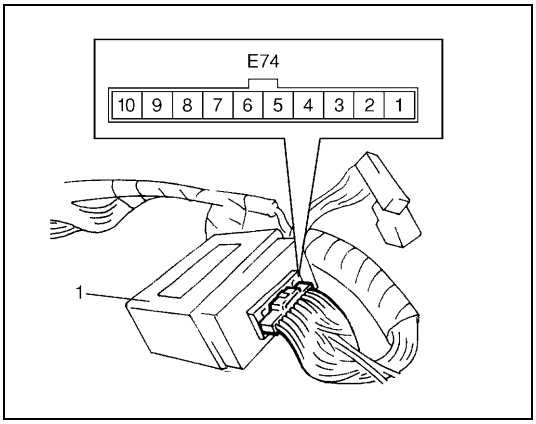

Check for input or output voltage of 4WD controller (1) (voltage between each circuit and body ground) with 4WD controller connector connected and ignition switch turned START (engine run).

Terminal	Circuit	Normal Voltage	Condition
E74-1	VSV1	about 0 V	Approx. 10 seconds after pushing “2WD” switch when transfer is at 4H
		10 – 14 V	Other than above mentioned condition
E74-2	VSV2	*about 0 V	Approx. 5 seconds after pushing “4WD” switch when transfer is at 2H
		10 – 14 V	Other than above-mentioned condition
E74-3	4WD indicator	*about 0 V	Transfer is at 4H or 4L
		10 – 14 V	Transfer is at 2H
E74-4	A/C ON signal (for M13 engine model)	*10 – 12 V	Engine running with A/C switch OFF, 5 – 10 seconds after engine start or 2WD / 4WD switch pushed while engine running with A/C ON.
		about 0 V	A/C switch and blower fan switch ON.
E74-5	Ground	about 0 V	any time
E74-6	Vacuum switch	*about 0 V	Approx. 5 seconds after pushing “4WD” switch when transfer is at
		10 – 14 V	Other than above-mentioned condition
E74-7	4WD switch	about 0 V	Transfer is at 4H or 4L
		10 – 14 V	Transfer is at 2H
E74-8	A/C switch (for M13 engine model)	about 0 V	A/C switch ON and blower fan switch ON
		10 – 14 V	Other than above-mentioned condition
E74-9	Engine revolution signal	Refer to “Inspection of ECM and Its Circuits” in Section 6-1 (M13 engine without VVT), 6-3 (M13 engine with VVT).	
E74-10	Ignition switch	10 – 14 V	IG: ON

* : With engine running

4WD Control System Check

Air Locking Hub

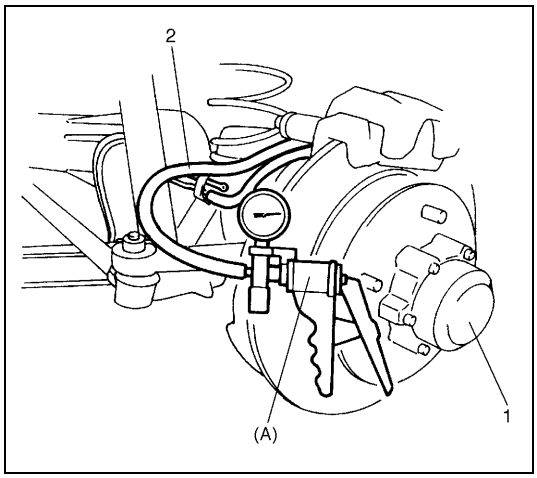

1) Start engine and select transfer to 2H position.
2) Connect vacuum pump gauge (special tool) to the spindle hose (2) which is disconnected from upper side pipe as shown. Apply vacuum and check operating sound from air locking hub (1).
   If there is not operating sound, replace air locking hub assembly.

Vacuum specification
More than –40 kPa (–5.70 psi)

Special tool
(A): 09917-47011

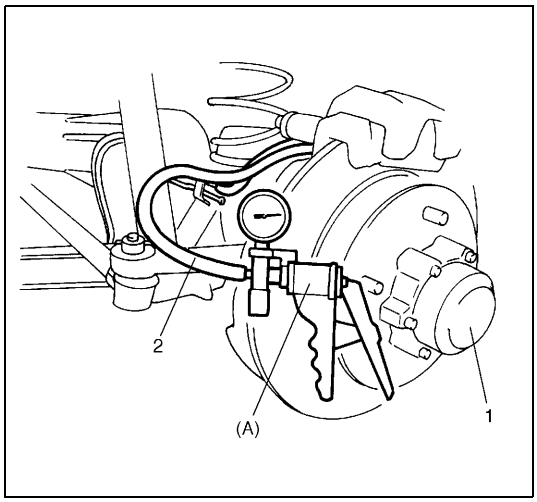

3) Connect hose, then start engine and select transfer to 4H or 4L position.
4) Connect vacuum pump gauge to the spindle hose (2) disconnected from lower side pipe.
   Apply vacuum and check operating sound from air locking hub (1).
   If there is no operating sound, replace air locking hub assembly.

Vacuum specification
More than –40 kPa (–5.70 psi)

Special tool
(A): 09917-47011

VSV1 and VSV2

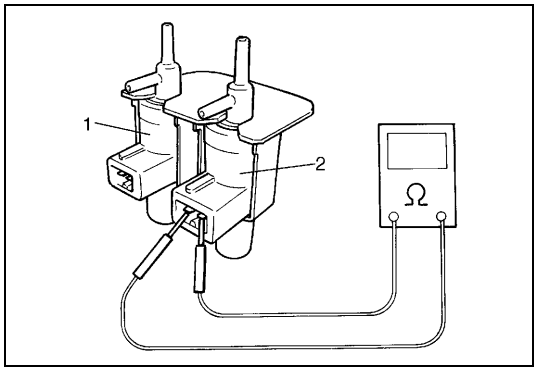

1) Disconnect coupler from VSV1 (1) (VSV2) (2) and check resistance between two terminals of VSV1 (1) (VSV2) (2).
   If resistance is out of specification, replace.

Resistance of VSV1 and VSV2
: 33 – 39 Ω

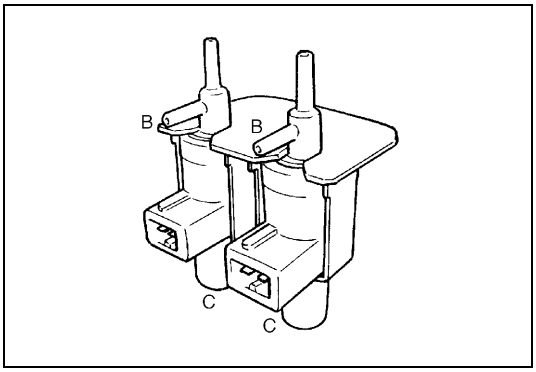

2) Blow air from B and check that air comes out of C.
   If found faulty, replace.

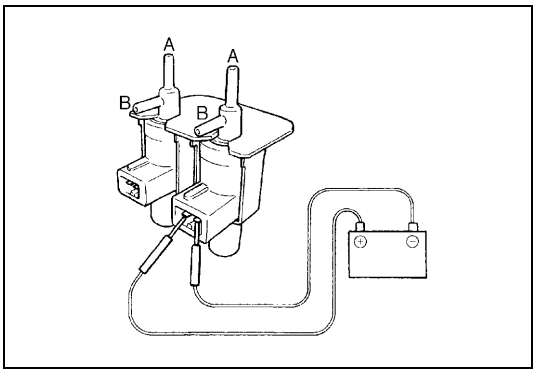

3) Connect 12 V-battery to VSV1 (VSV2) terminals and check continuity between A and B.
   Blow air from B and check that air comes out of A.
   If found faulty, replace.

Vacuum Switch

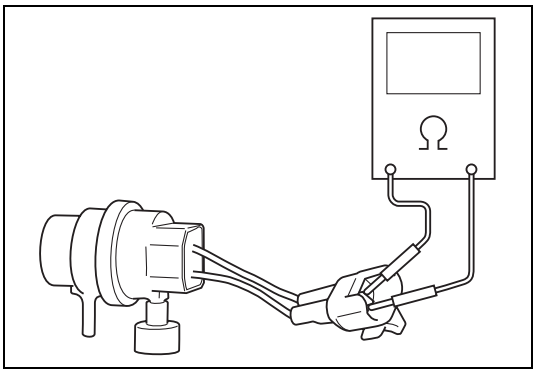

1) Disconnect coupler from vacuum switch and check resistance between two terminals of vacuum switch.
   If resistance is out of specification, replace.

Resistance of vacuum switch
: More than 1 MΩ

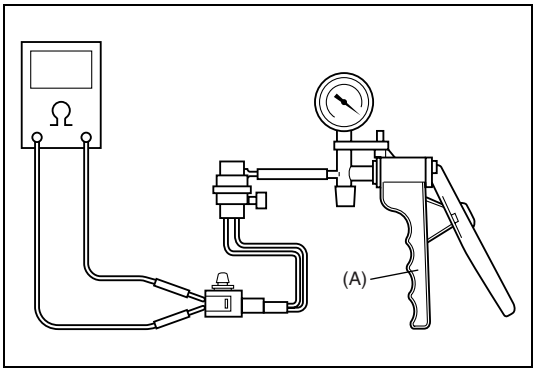

2) Connect vacuum pump gauge and apply vacuum more than –40 kPa (–5.70 psi), then check resistance between terminals of vacuum switch.
   If resistance is out of specification, replace.

Vacuum switch resistance
: Less than 0.8 Ω

Special tool
(A): 09917-47011

4WD Switch

Refer to “4WD Switch and 4WD Low Switch Inspection” in Section 7D.

Vacuum Hose / Pipe

Inspect vacuum hoses for leaks or cracks, vacuum pipes for cracks, dents or corrosion. If defective, replace.

Check Valve (For M13 Engine Model)

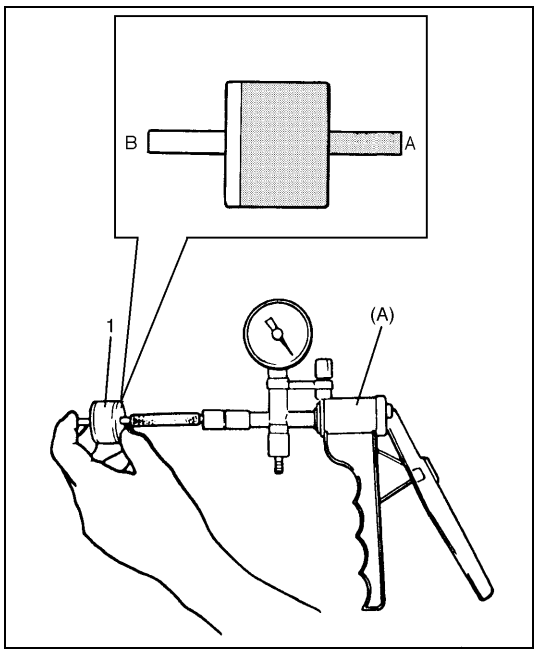

1) Remove check valve (1).
2) Close B side of check valve with finger as shown and apply –60 kPa (–8.70 psi) vacuum by means of vacuum pump. Then check that vacuum is applied. Apply vacuum to another side of check valve and check that vacuum is not applied. Replace if defective.

Special tool
(A): 09917-47011

A:	Intake manifold side
B:	Vacuum switching valve side

Vacuum Pump (For K9K Engine Model)

Refer to “Vacuum Pump” in Section 6H.

Vacuum Control Valve (For K9K Engine Model)

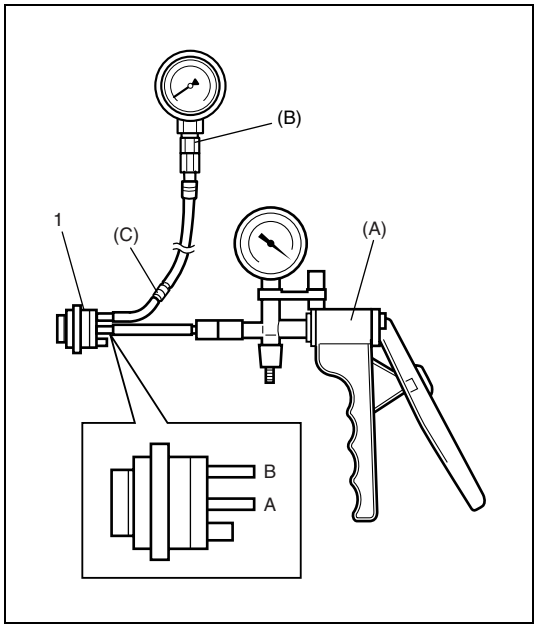

1) Remove vacuum control valve.
2) Connect vacuum pump gauge to A pipe of vacuum control valve and vacuum gauge to B pipe of vacuum control valve.
3) Apply vacuum lower than –60 kPa (–8.70 psi), then check vacuum applied to B pipe of vacuum, control valve. If vacuum is out of specification, replace.

Vacuum specification applied to B pipe when applying –60 kPa to A pipe
–50 – –54 kPa (–7.25 – –7.83 psi)

Special tool
(A): 09917-47011
(B): 09915-67311
(C): 09918-08210

A:	Pipe to vacuum pump
B:	Pipe to vacuum switching valve

Special Tool

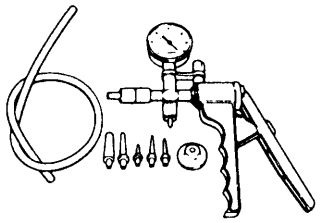 09917-47011 Vacuum pump gauge	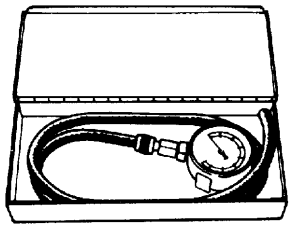 09915-67311 Vacuum gauge	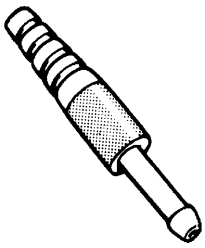 09918-08210 Vacuum gauge hose joint	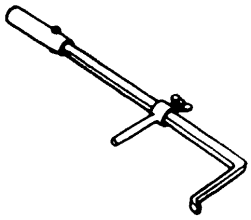 09913-50121 Oil seal remover
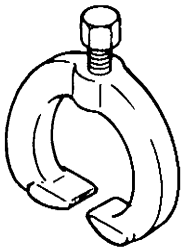 09913-65210 Tie rod end remover	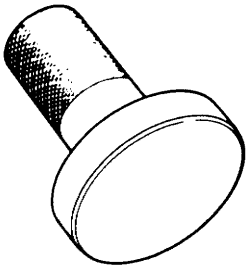 09913-75520 Bearing installer	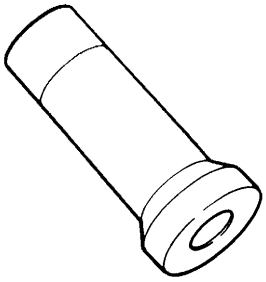 09951-76010 Bearing installer	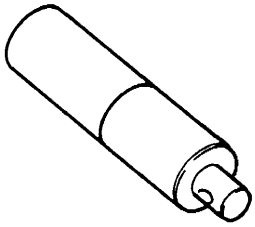 09924-74510 Bearing installer handle
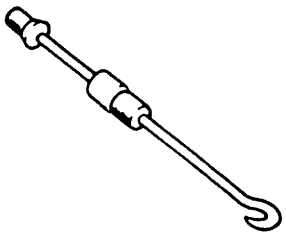 09942-15510 Sliding hammer	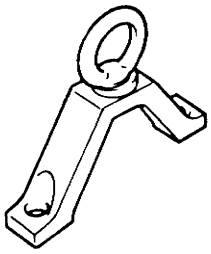 09943-35511 or 09943-35512 Brake drum remover	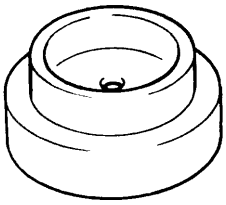 09944-66010 Wheel hub / knuckle oil seal installer	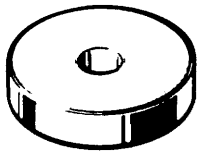 09944-68510 Bearing installer attachment
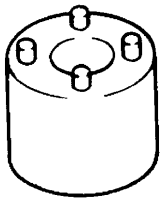 09951-16050 Wheel bearing tightening tool	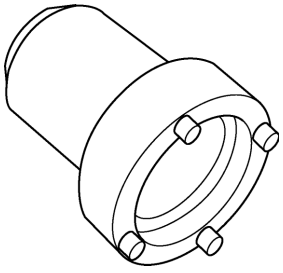 09944-77020 Ring nut wrench	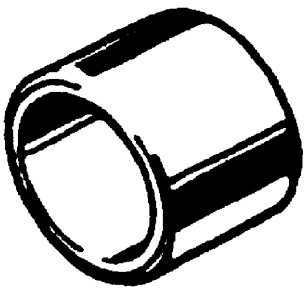 09944-78210 Bearing installer support	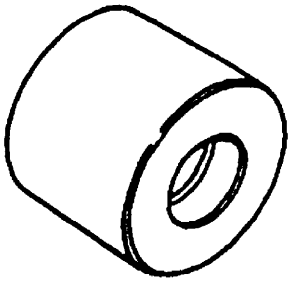 09917-88210 Valve guide installer attachment

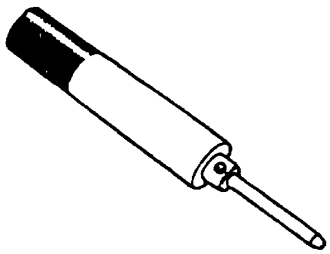 09916-58210 Valve guide installer handle	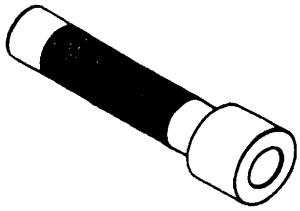 09922-55131 Bearing installer	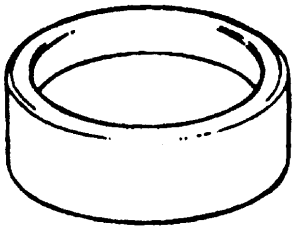 09944-66020 Bearing installer	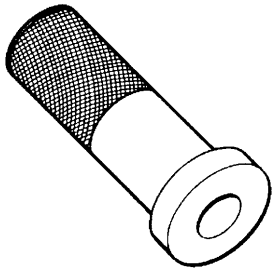 09913-85210 Oil seal installer
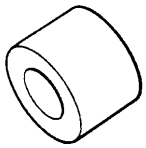 09951-16030 Bush remover	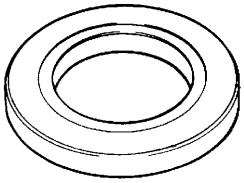 09951-26010 Bush remover plate		

SECTION 5

BRAKES

WARNING:

For lifting point of vehicle, refer to "Vehicle Lifting Points" Section 0A.

WARNING:

For vehicles equipped with a Supplement Restraint (Air Bag) System:

- **Service on and around the air bag system components or wiring must be performed only by an authorized SUZUKI dealer. Refer to "Air Bag System Components and Wiring Location View" under "General Description" in air bag system section in order to confirm whether you are performing service on or near the air bag system components or wiring. Please observe all WARNINGS and "Service Precautions" under "On-Vehicle Service" in air bag system section before performing service on or around the air bag system components or wiring. Failure to follow WARNINGS could result in unintentional activation of the system or could render the system inoperative. Either of these two conditions may result in severe injury.**
- **Technical service work must be started at least 90 seconds after the ignition switch is turned to the "LOCK" position and the negative cable is disconnected from the battery. Otherwise, the system may be activated by reserve energy in the Sensing and Diagnostic Module (SDM).**

NOTE:

- **When inspecting and servicing vehicle equipped with ABS, be sure to refer to "Precaution in Diagnosing Troubles" and "ABS Diagnostic Flow Table" section 5E first.**
- **All brake fasteners are important attaching parts in that they could affect the performance of vital parts and systems, and/or could result in major repair expense. They must be replaced with one of same part number or with an equivalent part if replacement becomes necessary. Do not use a replacement part of lesser quality or substitute design. Torque values must be used as specified during reassembly to assure proper retention of all parts. There is to be no welding as it may result in extensive damage and weakening of the metal.**
- **For the items with asterisk (*) in the "CONTENTS" below, refer to the same section of the Service Manual mentioned in "FOREWORD" of this Manual.**

CONTENTS

General Description 5-3
Diagnosis ..... 5- *
Road Testing Brakes ..... 5- *
Brake Fluid Leaks ..... 5- *
Substandard or Contaminated Brake Fluid ..... 5- *
Diagnosis Table ..... 5- *
Brake Pedal Free Height Adjustment ..... 5- *
Brake Pedal Play Check ..... 5- *
Stop Light Switch Adjustment ..... 5- *
Excessive Pedal Travel Check ..... 5- *
Front Brake Disc Check ..... 5- *
Front Brake Pad Check ..... 5- *
Rear Brake Shoe Check ..... 5- *
Master Cylinder and Brake Fluid Level Check ..... 5- *
Rear Drum Brake Shoe Adjustment ..... 5- *
Parking Brake Inspection and Adjustment ..... 5- *
Booster Operation Check ..... 5- *
Fluid Pressure Test (If Equipped with LSPV) ..... 5- *
On-Vehicle Service ..... 5- *
Air Bleeding of Brake System ..... 5- *
Brake Hose and Pipe Inspection ..... 5- *
Front Disc Brake ..... 5- *
Brake pad ..... 5- *
Caliper assembly ..... 5- *
Brake Disc ..... 5- *

Rear Brake ..... 5- *
Brake drum ..... 5- *
Brake shoe ..... 5- *
Wheel Cylinder ..... 5- *
Brake back plate ..... 5- *
Master Cylinder ..... 5- *
Master Cylinder Reservoir ..... 5- *
Master Cylinder Assembly ..... 5- *
Master Cylinder ..... 5- *
Fill Reservoir ..... 5- *
LSPV (Load Sensing Proportioning Valve) Assembly (If Equipped) ..... 5- *
LSPV Assembly ..... 5- *
Proportioning and Bypass Valve 5-4
Brake Booster 5-5
Inspection and adjustment ..... 5- *
Brake Hose/Pipe 5-5
Front brake hose/pipe 5-5
Rear Brake Hose/Pipe ..... 5- *
Parking Brake Lever/Cable ..... 5- *
Parking brake lever ..... 5- *
Parking Brake Cable ..... 5- *
Tightening Torque Specifications 5-9
Required Service Material ..... 5- *
Special Tool ..... 5- *

General Description

When the foot brake pedal is depressed, hydraulic pressure is developed in the master cylinder to actuate pistons (two in front and four in rear).
The master cylinder is a tandem master cylinder. Three (or two) brake pipes are connected to the master cylinder and they make two independent circuits. One connects front brakes (right and left) and the other connects rear brakes (right and left).
The load sensing proportioning valve (LSPV) or the proportioning and bypass (P & B) valve is included in these circuits between the master cylinder and the rear brake.
In this brake system, the disc brake type is used for the front wheel brake and a drum brake type (leading/trailing shoes) for the rear wheel brake.
The parking brake system is mechanical. It applies brake force to only rear wheels by means of the cable and mechanical linkage system. The same brake shoes are used for both parking and foot brakes.

NOTE:

The figures show left-hand steering vehicle.

WARNING:

If any hydraulic component is removed or brake line disconnected, bleed the brake system. The torque values specified are for dry, unlubricated fasteners.

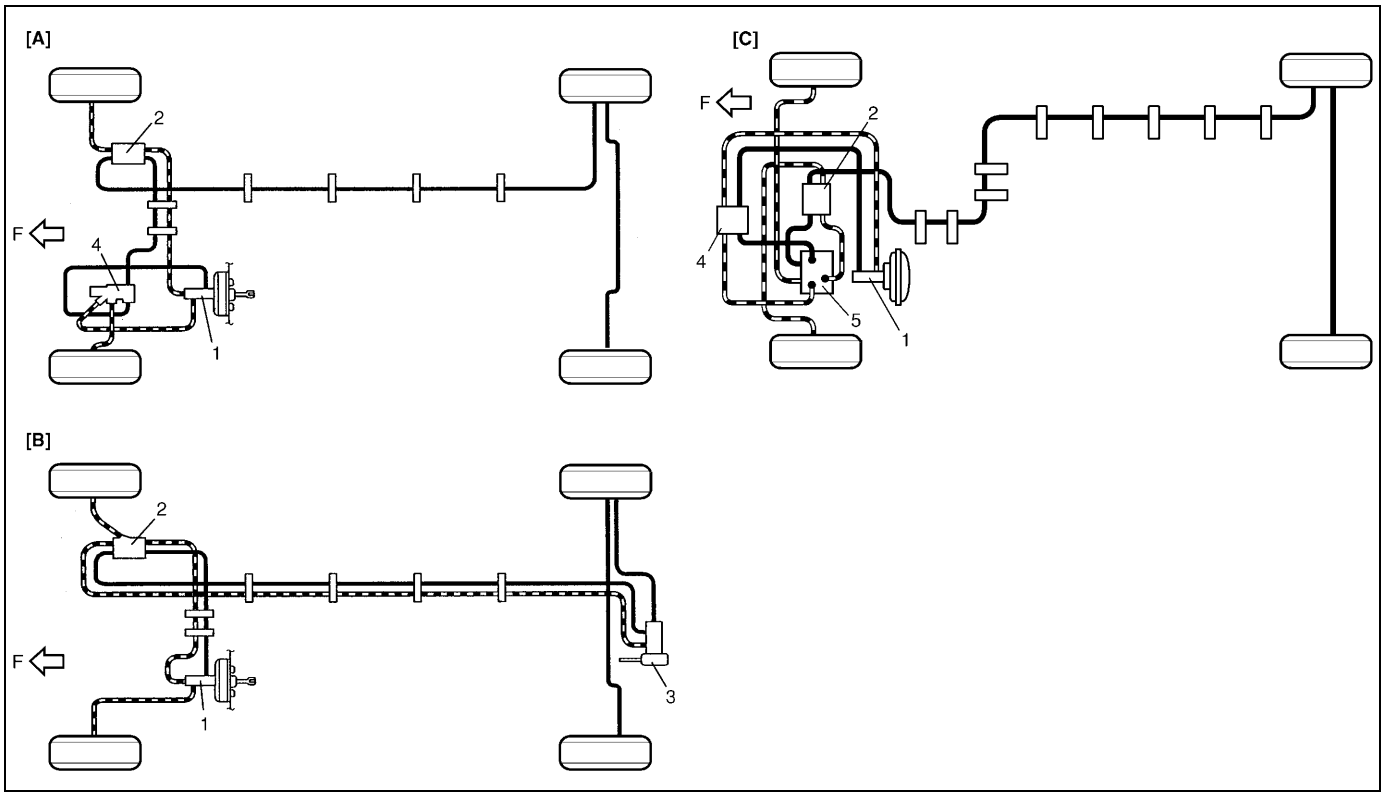

[A] : Vehicle without ABS and LSPV	1. Master cylinder	4. Proportioning and bypass valve
[B] : Vehicle with LSPV	2. 5-way joint (4-way joint)	5. Hydraulic Unit
[C] : Vehicle with ABS	3. LSPV (Load Sensing Proportioning valve)	F: Forward

Proportioning and Bypass Valve

REMOVAL

CAUTION:
- **Do not allow brake fluid to get on painted surfaces.**
- **Never disassemble proportioning and bypass valve. If it is found faulty, replace it with new one.**

1) Clean around reservoir cap and take out fluid with syringe or such.

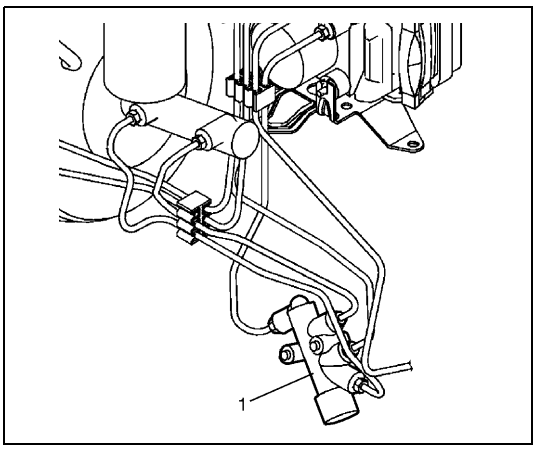

2) Disconnect brake pipes from proportioning and bypass valve (1).
3) Remove proportioning and bypass valve.

INSTALLATION

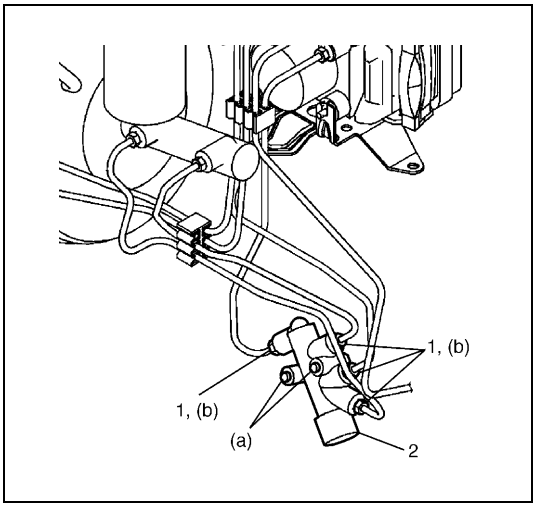

1) Install proportioning and bypass valve (2).

Tightening torque
Proportioning and bypass valve bolts
(a) : 11 N·m (1.1 kg-m, 8.0 lb-ft)

2) Tighten flare nuts (1) to specified torque.

Tightening torque
Brake pipe flare nuts
(b) : 16 N·m (1.6 kg-m, 12.0 lb-ft)

3) Fill reservoir with specified brake fluid.
4) Bleed air from system referring to “Air Bleeding of Brake System” in this section.

Brake Booster

Brake Hose/Pipe

Front brake hose/pipe

For left-hand steering vehicle (M13 engine model)

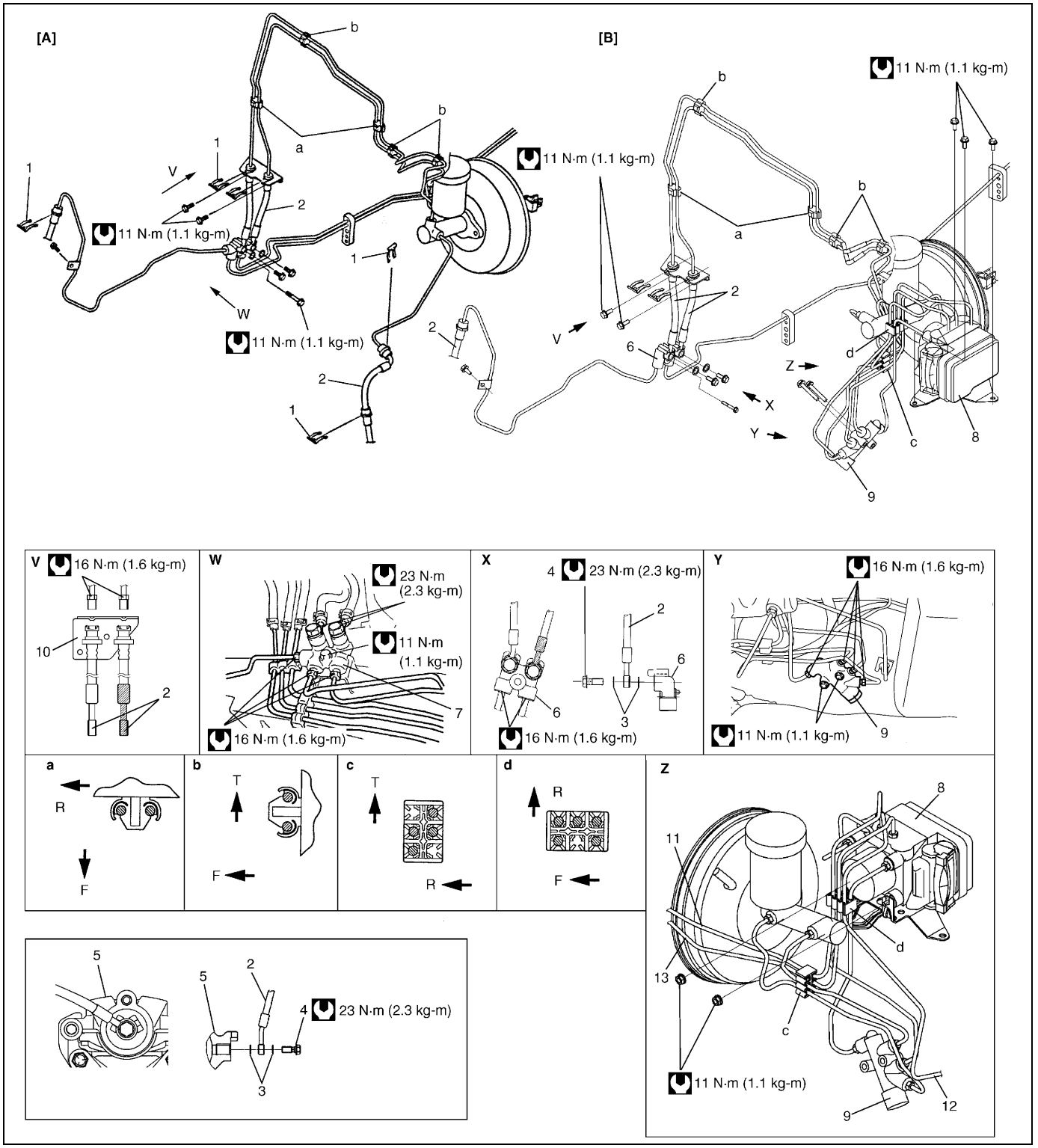

[A] : For vehicle without ABS	X : View X	5. Brake caliper	12. To front left brake caliper
[B] : For vehicle with ABS	Y : View Y	6. 4 way joint	13. To rear brake
F : Front side	Z : View Z	7. 5 way joint	a-d: Clamp
R : Right side	1. E-ring	8. ABS hydraulic unit/control module assembly	Tightening torque
T : Top side	2. Flexible hose	9. Proportioning and bypass valve	

V : View V	3. Hose washer	10. Hose bracket
W : View W	4. Hose bolt	11. To front right brake caliper

For left-hand steering vehicle (K9K engine model)

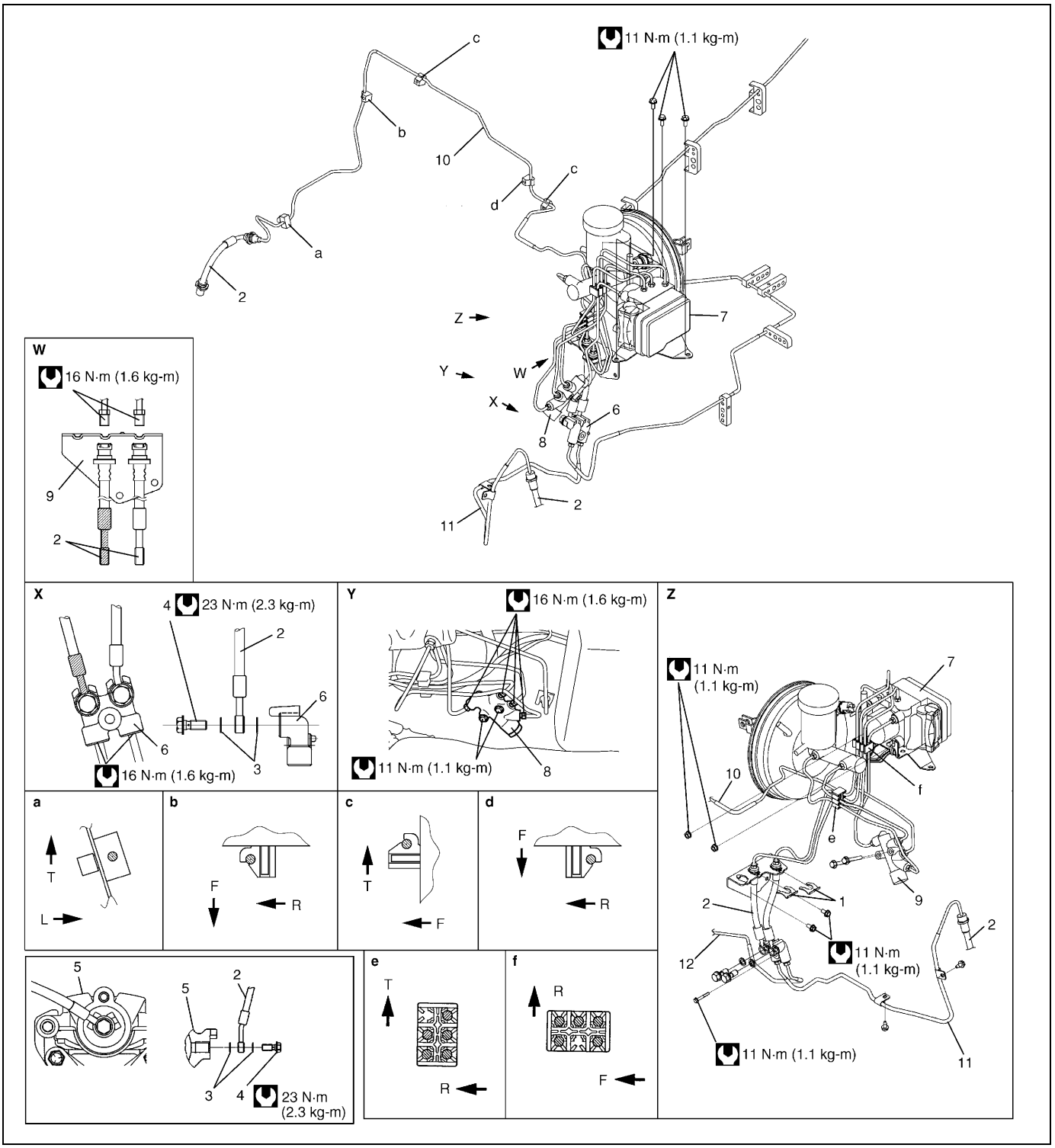

F : Front side	Y : View Y	5. Brake caliper	11. To front left brake caliper
R : Right side	Z : View Z	6. 4 way joint	12. To rear brake
L : Left side	1. E-ring	7. ABS hydraulic unit/control module assembly	a-f: Clamp
T : Top side	2. Flexible hose	8. Proportioning and bypass valve	Tightening torque
W : View W	3. Hose washer	9. Hose bracket	
X : View X	4. Hose bolt	10. To front right brake caliper	

For right-hand steering vehicle

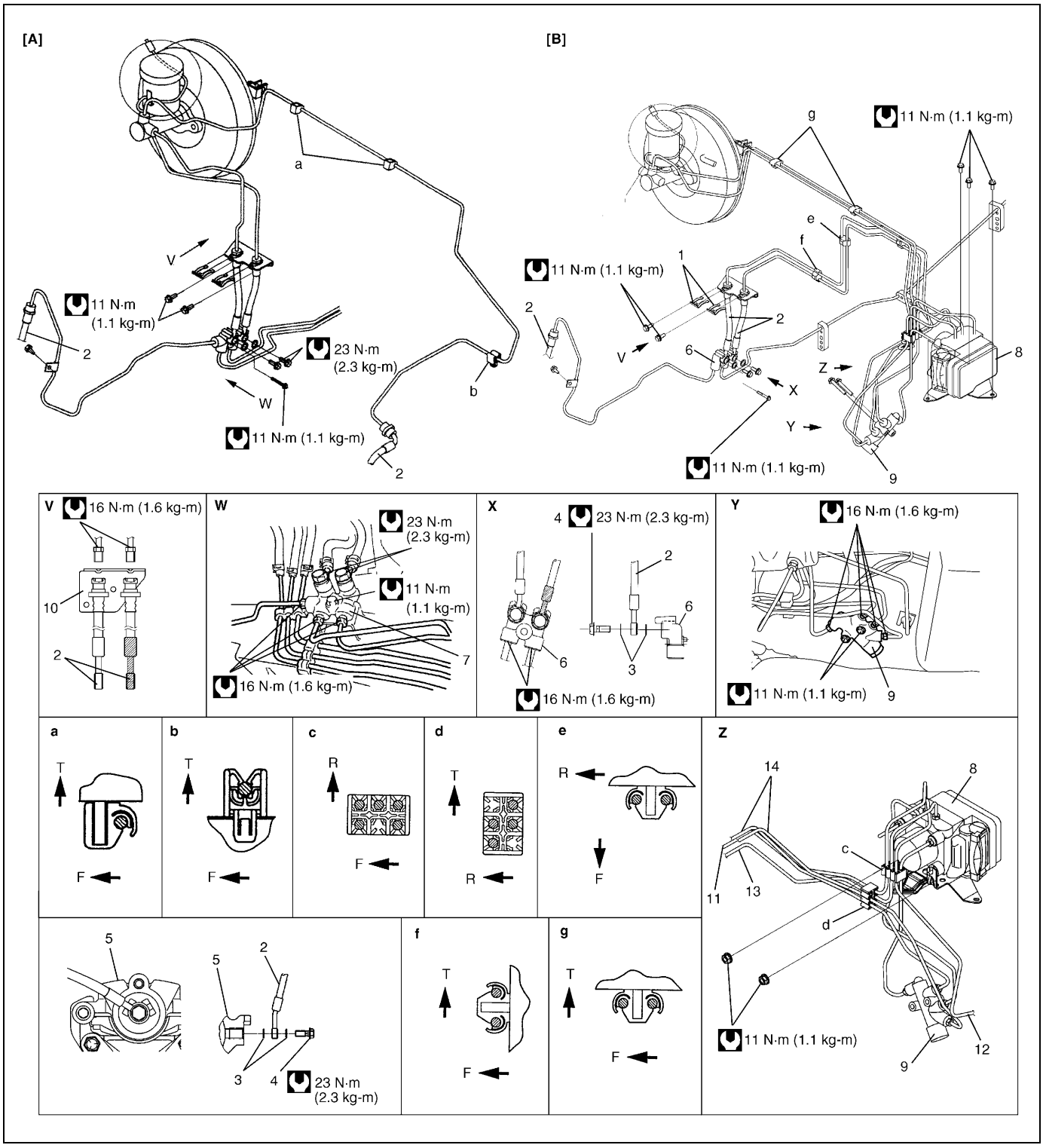

[A] : For vehicle without ABS	X : View X	5. Brake caliper	12. To front left brake caliper
[B] : For vehicle with ABS	Y : View Y	6. 4 way joint	13. To rear brake
F : Front side	Z : View Z	7. 5 way joint	14. Front brake master cylinder
R : Right side	1. E-ring	8. ABS hydraulic unit	a-g: Clamp
T : Top side	2. Flexible hose	9. Proportioning and bypass valve	Tightening torque
V : View V	3. Hose washer	10. Hose bracket	
W : View W	4. Hose bolt	11. To front right brake caliper	

REMOVAL

1) Raise, suitably support vehicle. Remove wheel if necessary.
2) Clean dirt and foreign material from both hose end or pipe end fittings.
3) Drain brake fluid in reservoir.

CAUTION:
Do not allow brake fluid to get on painted surface.
Painted surface will be damaged by brake fluid, flush it with water immediately if any fluid is spilled.

4) Remove brake hose and pipe.

INSTALLATION

1) Install brake hose and pipe by reversing removal procedure, noting the following points.
   For installation, make sure that steering wheel is in straightforward position and hose has no twist or kink. Check to make sure that hose doesn't contact any part of suspension, both in extreme right and extreme left turn conditions. If it does at any point, remove and correct.
2) Bleed brake system referring to "Air Bleeding of Brake System" in this section.
3) Perform brake test and check installed part for fluid leakage.

Tightening Torque Specifications

Fastening part		Tightening torque		
		N•m	kg-m	lb-ft
Brake caliper carrier bolt		85	8.5	61.5
Brake caliper pin bolt (M13 engine model)		22	2.2	16.0
Brake caliper pin bolt (K9K engine model)		27	2.7	19.5
Front brake flexible hose bolt		23	2.3	17.0
Rear brake back plate nut		23	2.3	17.0
Master cylinder nut		13	1.3	9.5
Booster nut		13	1.3	9.5
Brake pipe 5-way joint bolt or 4-way joint bolt		11	1.1	8.0
Brake pipe flare nut		16	1.6	12.0
LSPV bolt		25	2.5	18.0
Proportioning and bypass valve bolt		11	1.1	8.0
Brake bleeder plug	Front caliper (M13 engine model)	11	1.1	8.0
	Front caliper (K9K engine model)	8.5	0.85	6.5
	Rear wheel cylinder, LSPV	8	0.8	6.0
Wheel nut		95	9.5	69.0
Hose bracket bolt		11	1.1	8.0
Booster clevis nut		25	2.5	18.0
Stop light switch lock nut		6.5	0.65	4.7
Parking brake lever bolt		23	2.3	17.0
Wheel cylinder mounting bolt		9	0.9	6.5
Piston stopper bolt		10	1.0	7.5
LSPV adjust bolt		25	2.5	18.0

SECTION 5E

ANTILOCK BRAKE SYSTEM (ABS)

WARNING:

For vehicles equipped with a Supplement Restraint (Air Bag) System:

- **Service on and around the air bag system components or wiring must be performed only by an authorized SUZUKI dealer. Refer to "Air Bag System Components and Wiring Location View" under "General Description" in air bag system section in order to confirm whether you are performing service on or near the air bag system components or wiring. Please observe all WARNINGS and "Service Precautions" under "On-Vehicle Service" in air bag system section before performing service on or around the air bag system components or wiring. Failure to follow WARNINGS could result in unintentional activation of the system or could render the system inoperative. Either of these two conditions may result in severe injury.**
- **Technical service work must be started at least 90 seconds after the ignition switch is turned to the "LOCK" position and the negative cable is disconnected from the battery. Otherwise, the system may be activated by reserve energy in the Sensing and Diagnostic Module (SDM).**

NOTE:

- **All brake fasteners are important attaching parts in that they could affect the performance of vital parts and systems, and/or could result in major repair expense. They must be replaced with one of same part number or with an equivalent part if replacement part of lesser quality or substitute design. Torque values must be used as specified during reassembly to assure proper retention of all parts. There is to be no welding as it may result in extensive damage and weakening of the metal.**
- **For the items with asterisk (*) in the "CONTENTS" below, refer to the same section of the Service Manual mentioned in "FOREWORD" of this Manual.**

CONTENTS

General Description 5E-3
System Schematic 5E-3
ABS Component Parts Location 5E-4
ABS Control Module 5E-5
Self-diagnosis function 5E-5
Fail-safe function 5E-5
Diagnosis 5E-6
Precaution in Diagnosing Troubles 5E-6
ABS Diagnostic Flow Table 5E-6
"ABS" Warning Lamp Check 5E-9
Diagnostic Trouble Code (DTC) Check 5E-9
Diagnostic Trouble Code (DTC) Clearance 5E-11
Diagnostic Trouble Code (DTC) Table 5E-12
System Circuit 5E-14
Table – A "ABS" Warning Lamp Circuit Check – Lamp Does Not Come "ON" at Ignition Switch ON 5E-17
Table – B "ABS" Warning Lamp Circuit Check – Lamp Comes "ON" Steady 5E-18
Table – C "ABS" Warning Lamp Circuit Check – Lamp Flashes Continuously While Ignition Switch is ON 5E-19
Table – D Code (DTC) is Not Outputted Even With Diag. Switch Terminal Connected to Ground 5E-20
DTC C1015 (DTC 15) – G Sensor Circuit 5E-21
DTC C1016 (DTC 16) – Stop Lamp Circuit 5E-23
DTC C1021 (DTC 21), DTC C1022 (DTC 22) – Right Front Wheel Speed Sensor Circuit 5E-24
DTC C1025 (DTC 25), DTC C1026 (DTC 26) – Left Front Wheel Speed Sensor Circuit 5E-24
DTC C1031 (DTC 31), DTC C1032 (DTC 32) – Right Rear Wheel Speed Sensor Circuit 5E-24
DTC C1035 (DTC 35), DTC C1036 (DTC 36) – Left Rear Wheel Speed Sensor Circuit 5E-24

DTC C1041 (DTC 41), DTC C1042 (DTC 42) – Right Front Solenoid Circuit 5E-26
DTC C1045 (DTC 45), DTC C1046 (DTC 46) – Left Front Solenoid Circuit..... 5E-26
DTC C1055 (DTC 55), DTC C1056 (DTC 56) – Rear Solenoid Circuit 5E-26
DTC C1057 (DTC 57) – Power Source Circuit..... 5E-27
DTC C1061 (DTC 61) – ABS Pump Motor Circuit..... 5E-28
DTC C1063 (DTC 63) – ABS Fail Safe Circuit..... 5E-29
DTC C1071 (DTC 71) – ABS Control Module 5E-30

On-Vehicle Service 5E-31
Precaution..... 5E-31
ABS Hydraulic Unit Operation Check 5E-31
ABS Hydraulic Unit / Control Module Assembly 5E-33
Front Wheel Speed Sensor ..... 5E- *
Front Wheel Sensor Ring ..... 5E- *
Rear Wheel Speed Sensor..... 5E- *
Rear Wheel Sensor Ring..... 5E- *
G Sensor..... 5E- *
Tightening Torque Specification..... 5E-35
Special Tool ..... 5E- *

General Description

System Schematic

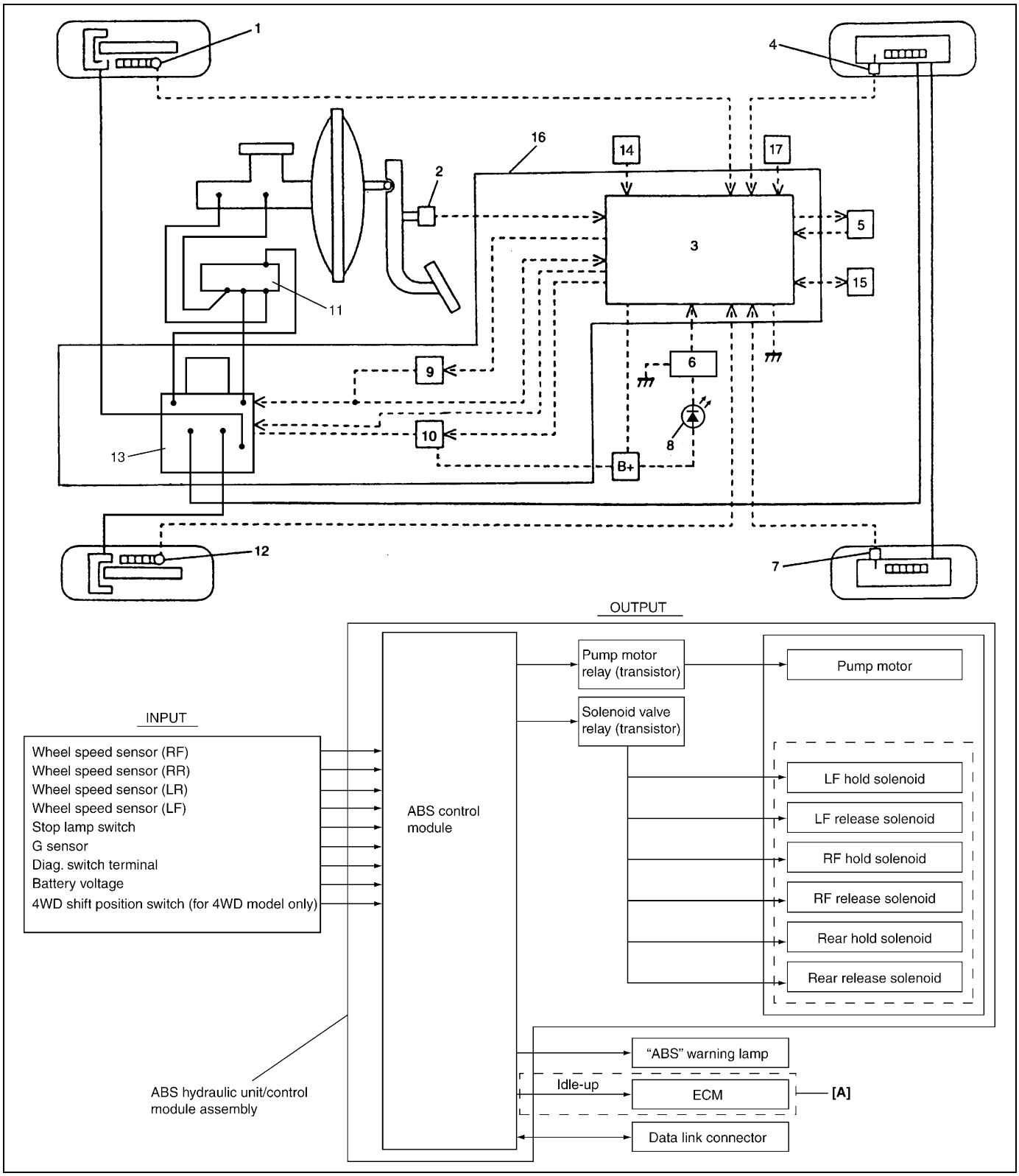

1. Wheel speed sensor (Right front)	7. Wheel speed sensor (Left rear)	13. ABS hydraulic unit
2. Stop lamp switch	8. "ABS" warning lamp	14. G sensor
3. ABS control module	9. ABS pump motor relay (transistor)	15. Data link connector
4. Wheel speed sensor (Right rear)	10. ABS solenoid valve relay (transistor)	16. ABS hydraulic unit / control module assembly
5. Monitor connector	11. Proportioning valve	17. 4WD switch (for 4WD model only)
6. Lamp driver module	12. Wheel speed sensor (Left front)	[A]: M13 engine model only

ABS Component Parts Location

[A]

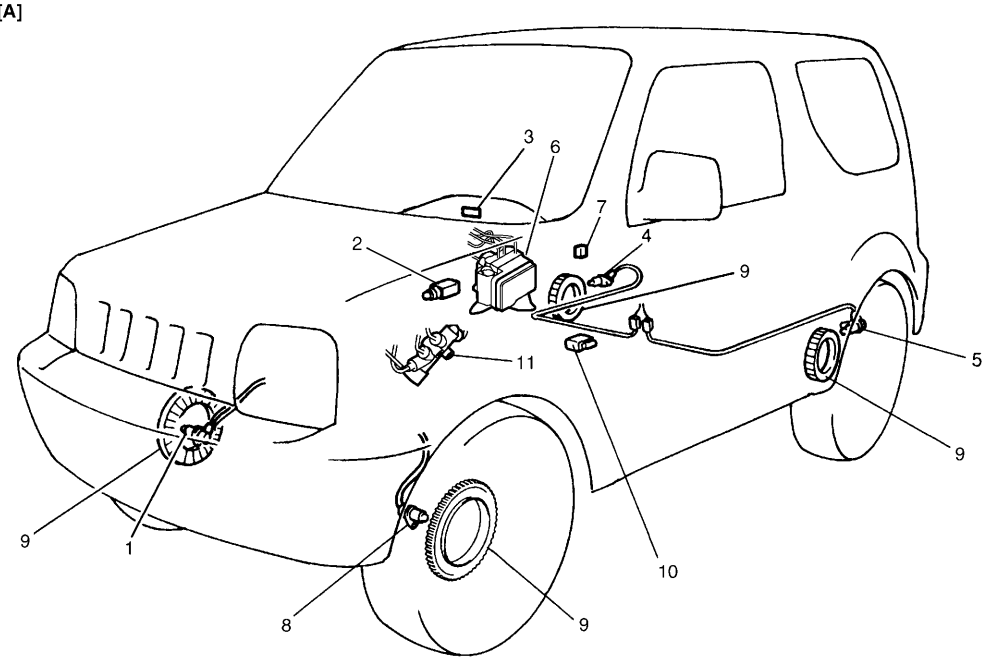

[B]

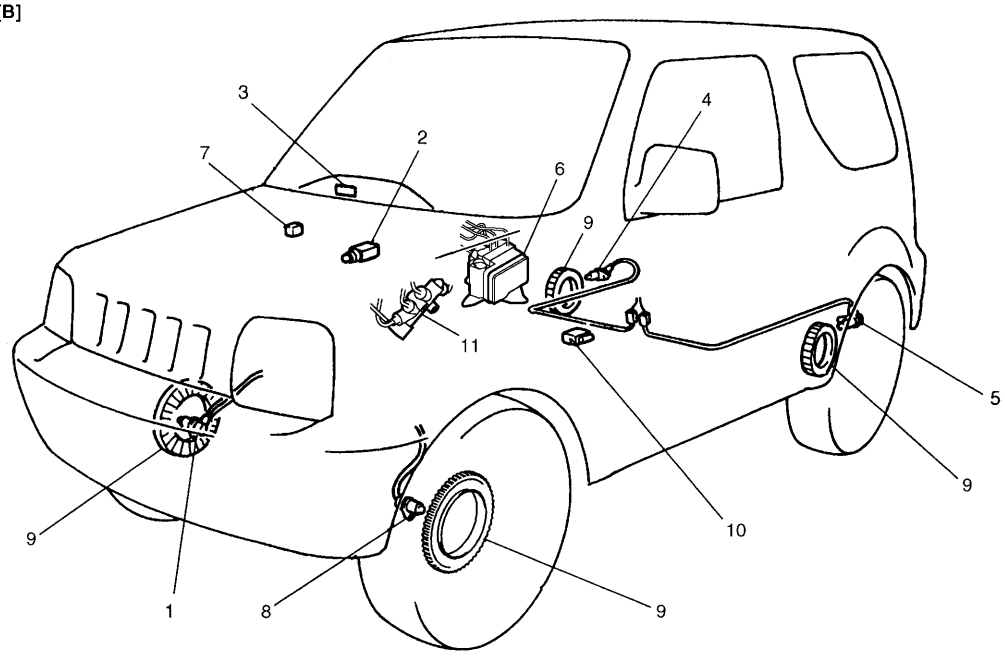

1. Wheel speed sensor (Right front)	6. ABS hydraulic unit / control module assembly	11. Proportioning valve
2. Stop lamp switch	7. Monitor connector	[A] : For LH steering vehicle
3. “ABS” warning lamp	8. Wheel speed sensor (Left front)	[B] : For RH steering vehicle
4. Wheel speed sensor (Right rear)	9. Wheel speed sensor ring	
5. Wheel speed sensor (Left rear)	10. G sensor	

ABS Control Module

Self-diagnosis function

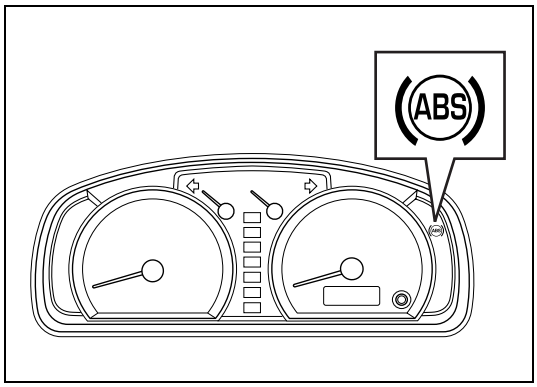

ABS control module diagnoses conditions of the system component parts (whether or not there is any abnormality) all the time and indicates the results (warning of abnormality occurrence and DTC) through the “ABS” warning lamp as described below.

1) When ignition switch is turned ON, “ABS” warning lamp for 2 seconds to check lamp and circuit.
2) When no abnormality has been detected (the system is in good condition), “ABS” warning lamp turns OFF after 2 seconds.
3) When an abnormality in the system is detected, “ABS” warning lamp lights and the area where that abnormality lies is stored in the memory in ABS control module.
4) When Diag. switch terminal (2) of monitor connector (1) is grounded, the abnormal area is output as DTC.
   DTC is indicated by flashing pattern of ABS warning lamp. (Refer to the table bellow.)

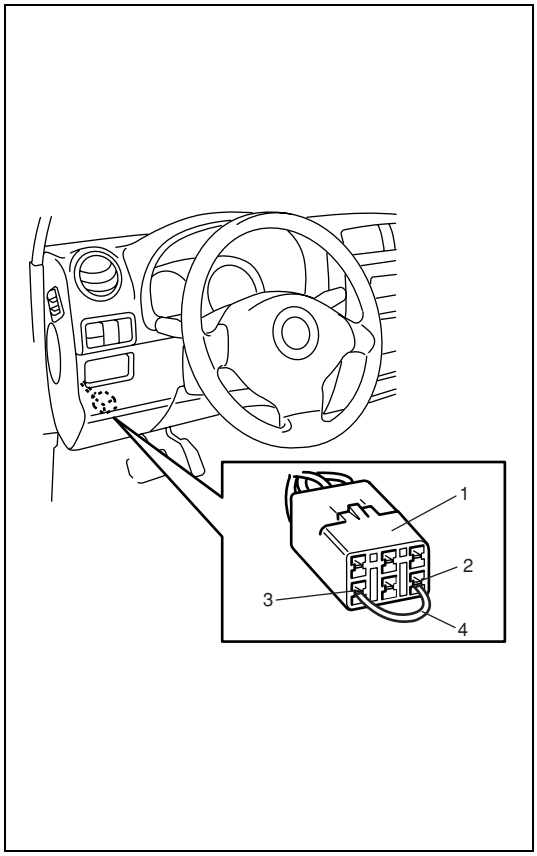

SYSTEM CONDITION		DIAGNOSIS SWITCH TERMINAL	“ABS” WARNING LAMP
In good condition at present	No trouble in the past	Open	OFF
		Grounded	DTC 12
	Trouble occurred in the past	Open	OFF
		Grounded	History DTC
Abnormality exists at present	No trouble in the past	Open	ON
		Grounded	Current DTC
	Trouble occurred in the past	Open	ON
		Grounded	Current and history DTC

For procedure to clear all DTC’s, refer to the item “Diagnostic Trouble Code (DTC) Clearance” in this section.

3. Ground terminal
4. Service wire

Fail-safe function

When an abnormality occurs (an abnormal DTC is detected), ABS control module turns OFF the solenoid valve relay (transistor) which supplies power to ABS hydraulic unit. Thus, with ABS not operating, brakes function just like the brake system of the vehicle without ABS.

Diagnosis

To ensure that the trouble diagnosis is done accurately and smoothly, observe “Precautions in Diagnosing Troubles” and follow “ABS Diagnostic Flow Table”.

Precaution in Diagnosing Troubles

- If the vehicles was operated in any of the following ways, “ABS” warning lamp may light momentarily but this does not indicate anything abnormal in ABS.
  - The vehicle was driven with parking brake pulled.
  - The vehicle was driven with brake dragging.
  - The vehicle was stuck in mud, sand, etc.
  - Wheel spin occurred while driving.
  - Wheel(s) was rotated while the vehicle was jacked up.
- Be sure to read “Precautions for Electronic Circuit Service” in Section 0A before inspection and observe what is written there.
- Be sure to use the trouble diagnosis procedure as described in the flow table. Failure to follow the flow table may result in incorrect diagnosis. Some other diag. trouble code may be stored by mistake in the memory of ABS control module during inspection.

ABS Diagnostic Flow Table

Refer to the following for the details of each step.

Step	Action	Yes	No
1	1) Perform “Customer complaint analysis”. 2) Perform “Problem symptom confirmation”. 3) Perform “DTC check, record and clearance”. Is there any trouble code?	Go to Step 2.	Go to Step 5.
2	Perform driving test. Is trouble symptom identified?	Go to Step 3.	Go to Step 6.
3	Check diagnostic trouble code. Is it malfunction code?	Go to Step 4.	Go to Step 5.
4	Inspect and repair referring to applicable diagnostic trouble code table in this section. Then perform final confirmation test after clearing diagnostic trouble code. Is trouble recur?	Go to Step 7.	End.
5	Inspect and repair referring to “Diagnosis Table” in Section 5. Then perform final confirmation test. Is trouble recur?	Go to Step 7.	End.
6	Check for intermittent problems referring to “Intermittent and Poor Connection” in Section 0A and related circuit of trouble code recorded in Step 3. Then perform final confirmation test after clearing diagnostic trouble code. Is trouble recur?	Go to Step 7.	End.
7	Perform diagnostic trouble code check record and clearance. Is there any trouble code?	Go to Step 4.	Go to Step 5.

1) MALFUNCTION ANALYSIS

a) Customer Complaint Analysis

Record details of the problem (failure, complaint) and how it occurred as described by the customer.

For this purpose, use of such a questionnaire form as shown below will facilitate collecting information to the point required for proper analysis and diagnosis.

Customer Questionnaire (Example)

Customer's name:	Model:	VIN:	
Date of issue:	Date of Reg:	Date of problem:	Mileage:

Problem Symptoms	• ABS warning lamp abnormal: fails to turn on/fails to go off/flashes • Abnormal noise while vehicle is running: from motor, from valve, other_____ • Wheel is locked at braking: • Pump motor does not stop (running): • Braking does not work: • Other:
Frequency of occurrence	• Continuous/Intermittent (times a day, a month)/ other_____
Conditions for Occurrence of Problem	• Vehicle at stop & ignition switch ON: • When starting: at initial start only/at every start/Other_____ • Vehicle speed: while accelerating/while decelerating/at stop/ while turning/while running at constant speed/ other_____ • Road surface condition: Paved road/rough road/snow-covered road/ other_____ • Chain equipment:
Environmental Condition	• Weather: fair/cloudy/rain/snow/other_____ • Temperature: °F (°C)
Diagnostic Trouble Code	• First check: Normal code/malfunction code ( ) • Second check after test drive: Normal code/malfunction code ( )

b) Problem Symptom Confirmation

Check if what the customer claimed in "Customer Questionnaire" is actually found in the vehicle and if the symptom is found, determine whether it is identified as a failure. (This step should be shared with the customer if possible.) When "ABS" warning lamp is not operating correctly, proceed to "Table – A "ABS" Warning Lamp Circuit Check – Lamp Does Not Come "ON" at Ignition Switch ON", "Table – B "ABS" Warning Lamp Circuit Check – Lamp Comes "ON" Steady" and "Table – C "ABS" Warning Lamp Circuit Check – Lamp Flashes Continuously While Ignition Switch is ON" in this section.

c) Diagnostic Trouble Code (DTC) Check, Record and Clearance

Perform "Diagnostic Trouble Code Check" procedure in this section, record it and then clear it referring to "Diagnostic Trouble Code Clearance" in this section.

If the malfunction DTC which was once displayed and then cleared cannot be detected (indicated) again when the ignition switch is turned ON, attempt to diagnose the trouble based on the DTC recorded in this step may mislead the diagnosis or make diagnosing difficult. Proceed to Step 2 to check ABS control module for proper self-diagnosis function.

If the malfunction DTC which was once displayed and then cleared can be detected (indicated) again when ignition switch is turned ON, proceed to Step 3.

2) DRIVING TEST
Test drive the vehicle at 40 km/h for more than a minute and check if any trouble symptom (such as abnormal lighting of “ABS” warning lamp) exists.
If the malfunction DTC is confirmed again at ignition switch ON, driving test as described in above is not necessary. Proceed to Step 3.

3) DIAGNOSTIC TROUBLE CODE CHECK
Recheck diagnostic trouble code referring to “DTC Check” in this section.

4) DIAGNOSTIC TROUBLE CODE FLOW TABLE
According to Diagnostic Flow Table for the diagnostic trouble code confirmed in Step 3, locate the cause of the trouble, namely in a sensor, switch, wire harness, connector, actuator, ABS control module or other part and repair or replace faulty parts.

5) “DIAGNOSIS TABLE” IN SECTION 5
Check the parts or system suspected as a possible cause referring to “Diagnosis Table” in Section 5 and based on symptoms appearing on the vehicle (symptoms obtained through Step 1)-a, 1)-b and 2) and repair or replace faulty parts, if any.

6) CHECK FOR INTERMITTENT PROBLEM
Check parts where an intermittent trouble is easy to occur (e.g., wire harness, connector, etc.), referring to Intermittent Trouble in Section 0A and related circuit of trouble code recorded in Step 1)-c.

7) FINAL CONFIRMATION TEST
Confirm that the problem symptom has gone and the ABS is free from any abnormal conditions. If what has been repaired is related to the malfunction DTC, clear the DTC once and perform test driving and confirm that a normal code is indicated.

"ABS" Warning Lamp Check

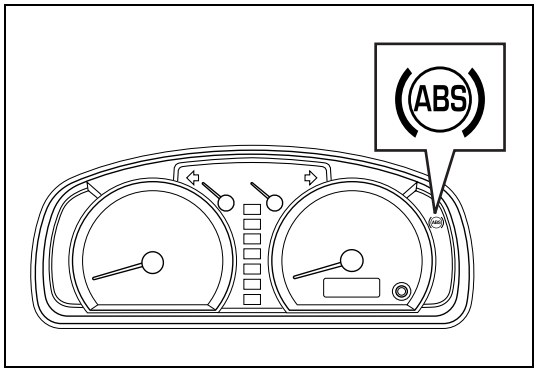

Turn ignition switch to ON position and check that "ABS" warning lamp comes ON for about 2 seconds and then goes OFF. If any faulty condition is found, advance to "Table – A "ABS" Warning Lamp Circuit Check – Lamp Does Not Come "ON" at Ignition Switch ON", "Table – B "ABS" Warning Lamp Circuit Check – Lamp Comes "ON" Steady" or "Table – C "ABS" Warning Lamp Circuit Check – Lamp Flashes Continuously While Ignition Switch is ON" in this section.

Diagnostic Trouble Code (DTC) Check

Not Using SUZUKI Scan Tool

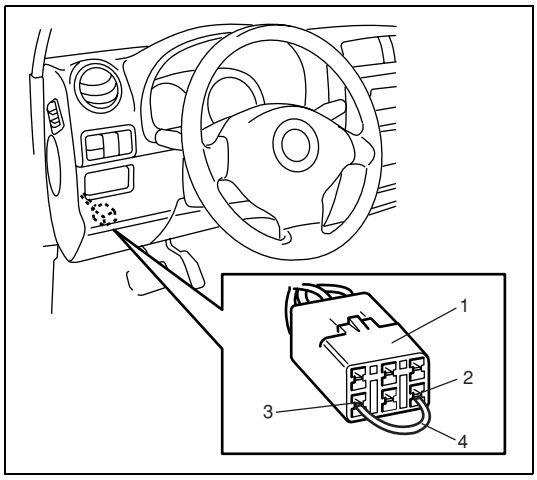

1) Perform "ABS Warning Lamp Check" in this section.
2) Turn ignition switch to OFF position and connect diag. switch terminal (2) and ground terminal (3) of monitor connector (1) with service wire (3).
3) Turn ignition switch to ON position.
4) Read flashing pattern of ABS warning lamp which represents DTC as shown in the following example and write it down. When more than 2 DTCs are stored in memory, flashing for each DTC is repeated three times starting with the smallest DTC number in increasing order.
   For details of DTC, refer to "Diagnostic Trouble Code (DTC) Table" in this section.

Example : When right front wheel speed sensor circuit opens (DTC 21)

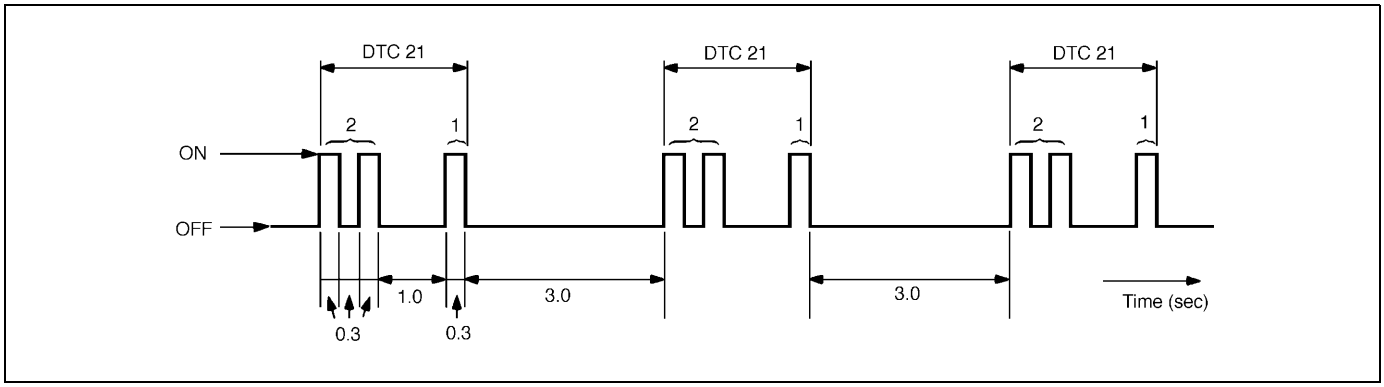

5) After completing the check, turn ignition switch off, disconnect service wire from monitor connector.

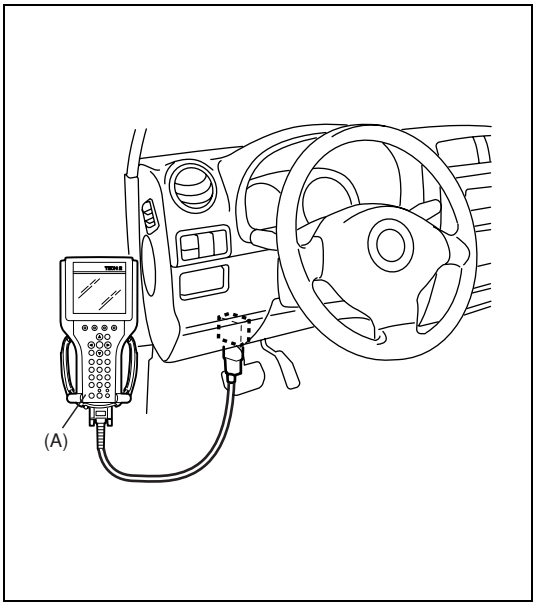

Using SUZUKI Scan Tool

1) Turn ignition switch to OFF position.
2) Connect SUZUKI scan tool to DLC.

Special tool
(A) : SUZUKI scan tool

3) Turn ignition switch to ON position.
4) Read DTC according to instructions displayed on SUZUKI scan tool and print it or write it down. Refer to SUZUKI scan tool operator's manual for further details.
   If communication between SUZUKI scan tool and ABS hydraulic unit / control module is not possible, check if SUZUKI scan tool is communicable by connecting it to ABS case, SUZUKI scan tool is in good condition. Then check data link connector and serial data line (circuit) in the vehicle with which communication was not possible.
5) After completing the check, turn ignition switch off and disconnect SUZUKI scan tool from DLC.

Diagnostic Trouble Code (DTC) Clearance

WARNING:

When preforming a driving test, select a safe place where there is neither any traffic nor any traffic accident possibility and be very careful during testing to avoid occurrence of an accident.

Not Using SUZUKI Scan Tool

After repair or replace malfunction part(s), clear all DTC's by preforming the following procedure.

1) Turn ignition switch to OFF position.

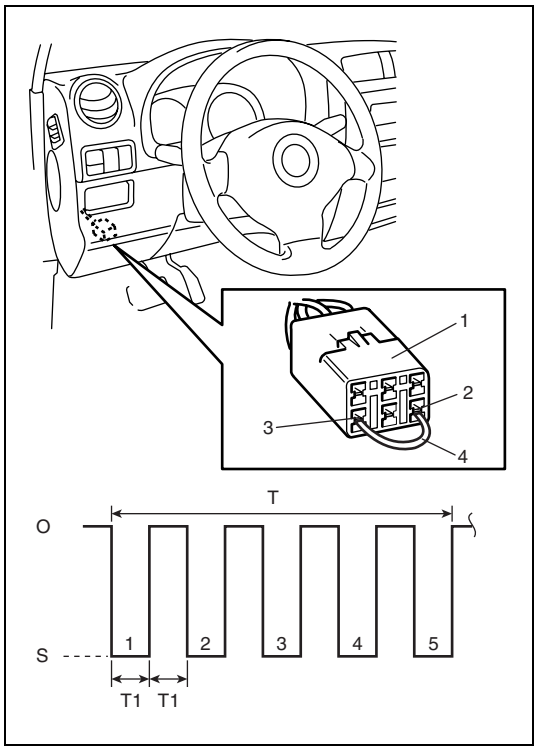

2) Using service wire (4), connect diag. switch terminal (2) of monitor connector (1) to ground terminal (3).
3) With connection described in above step 2) maintained, turn ignition switch to ON position.
4) Repeat disconnecting and reconnecting of service wire between diagnosis and ground terminals 5 times or more at about 1 sec. (T1) interval within 10 seconds.

O:	Open
S:	Short
T:	About 10 seconds

5) Turn ignition switch to OFF position and disconnect service wire (4) from monitor connector (1).
6) Perform "Driving Test" (Step 2 of "ABS Diagnostic Flow Table") and "Diagnostic Trouble Code (DTC) Check" in this section and confirm that normal DTC (DTC 12) is displayed.

Using Suzuki Scan Tool

1) Connect SUZUKI scan tool to DLC in the same manner as when making this connection for DTC check.
2) Turn ignition switch to ON position.
3) Erase DTC according to instructions displayed on scan tool. Refer to scan tool operator's manual for further derails.
4) After completing the clearance, turn ignition switch to OFF and disconnect scan tool from data link connector.
5) Perform "Driving Test" (Step 2 of "ABS Diagnostic flow Table") and "Diagnostic Trouble Code (DTC) Check" in this section and confirm that NO DTC is displayed on scan tool.

Diagnostic Trouble Code (DTC) Table

DTC (displayed on SUZUKI scan tool)	DTC (indicated by ABS warning lamp)	ABS warning light flashing pattern	DIAGNOSTIC ITEMS	
–	12	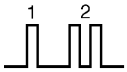	Normal	
C1015	15		G sensor circuit (for 4WD model only)	
C1016	16	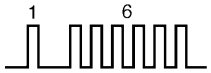	Stop lamp switch circuit	
C1021	21	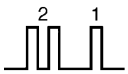	RF	Wheel speed sensor circuit and/or sensor ring
C1025	25		LF	
C1031	31		RR	
C1035	35		LR	
C1022	22	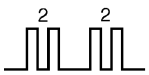	RF	
C1026	26		LF	
C1032	32		RR	
C1036	36		LR	
C1041	41	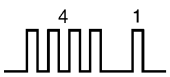	RF	Hold solenoid valve circuit
C1042	42			Release solenoid valve circuit
C1045	45		LF	Hold solenoid valve circuit
C1046	46			Release solenoid valve circuit
C1055	55		Rear	Hold solenoid valve circuit
C1056	56			Release solenoid valve circuit

DTC (displayed on SUZUKI scan tool)	DTC (indicated by ABS warning lamp)	ABS warning light flashing pattern	DIAGNOSTIC ITEMS
C1057	57		Power source
C1061	61	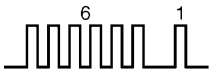	ABS pump motor circuit
C1063	63		ABS solenoid valve circuit
C1071	71		ABS control module

System Circuit

M13 engine model

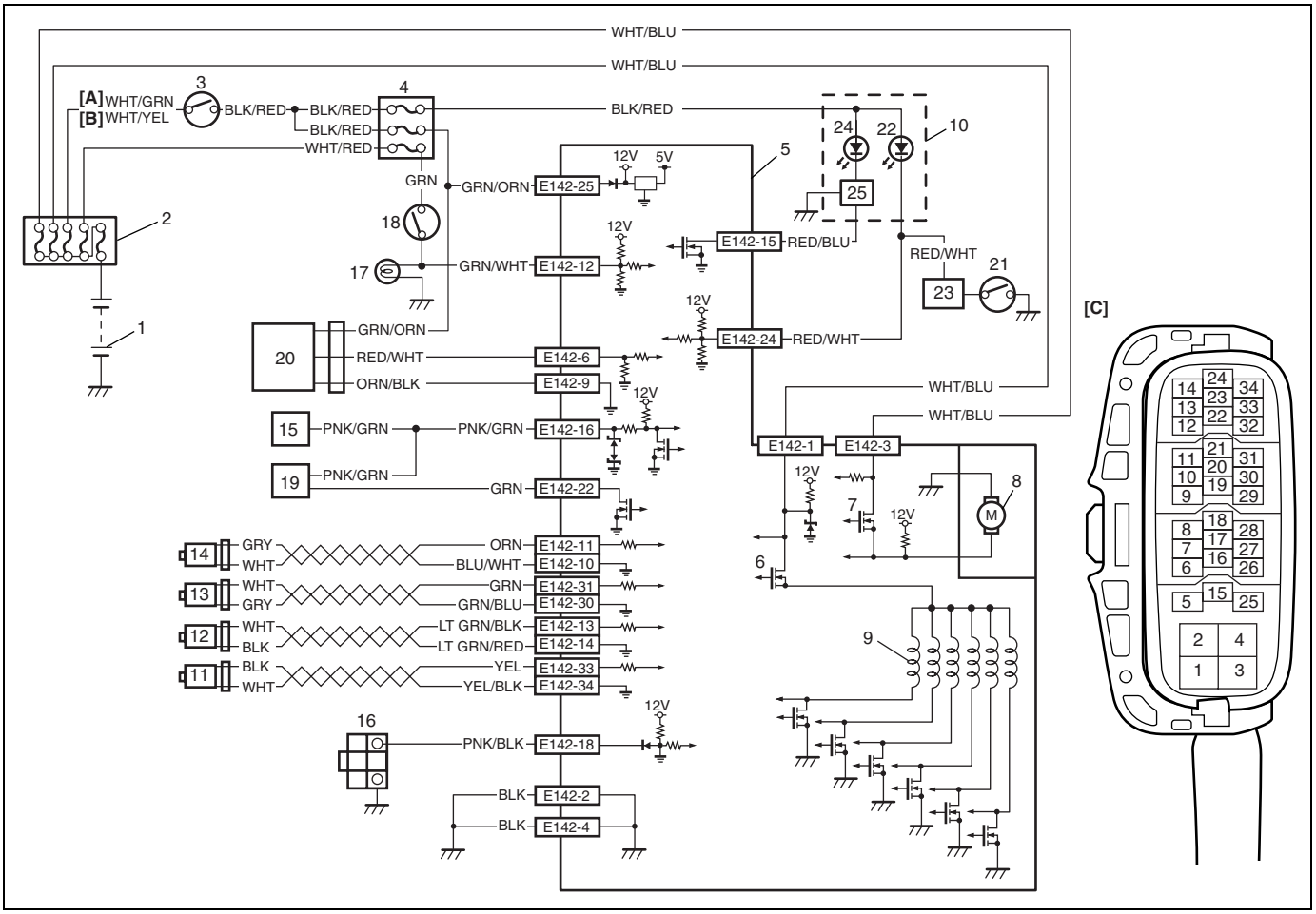

[A]: For M/T model	8. Pump motor	18. Stop lamp switch
[B]: For A/T model	9. Solenoid valves	19. ECM
[C]: ABS hydraulic unit / control module connector E142 (viewed from terminal side)	10. Combination meter	20. G sensor
1. Battery	11. Right rear wheel speed sensor	21. 4WD switch (for 4WD model only)
2. Main fuse box	12. Left rear wheel speed sensor	22. 4WD indicator lamp (for 4WD model only)
3. Ignition switch	13. Right front wheel speed sensor	23. 4WD controller (for 4WD model only)
4. Circuit fuse box	14. Left front wheel speed sensor	24. “ABS” warning lamp
5. ABS hydraulic unit / control module assembly	15. Data link connector	25. Lamp driver module
6. ABS solenoid valve relay (transistor)	16. Monitor connector	
7. ABS pump motor relay (transistor)	17. Stop lamp	

K9K engine model

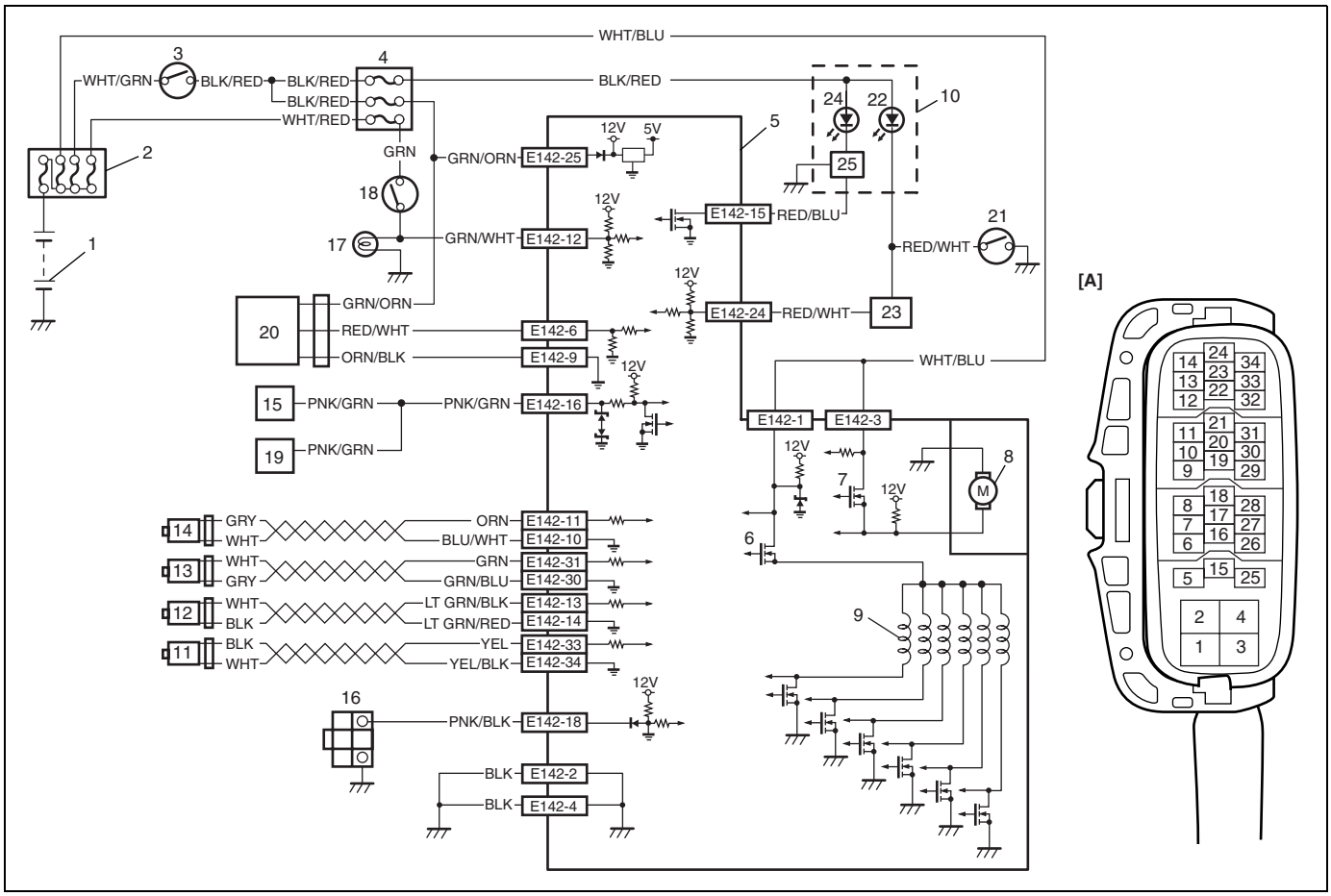

[A]: ABS hydraulic unit / control module connector E142 (viewed from terminal side)	9. Solenoid valves	18. Stop lamp switch
1. Battery	10. Combination meter	19. ECM
2. Main fuse box	11. Right rear wheel speed sensor	20. G sensor
3. Ignition switch	12. Left rear wheel speed sensor	21. 4WD switch (for 4WD model only)
4. Circuit fuse box	13. Right front wheel speed sensor	22. 4WD indicator lamp (for 4WD model only)
5. ABS hydraulic unit / control module assembly	14. Left front wheel speed sensor	23. 4WD controller (for 4WD model only)
6. ABS solenoid valve relay (transistor)	15. Data link connector	24. “ABS” warning lamp
7. ABS pump motor relay (transistor)	16. Monitor connector	25. Lamp driver module
8. Pump motor	17. Stop lamp	

TERMINAL		CIRCUIT
E142	1	ABS solenoid valve relay (transistor)
	2	Ground
	3	ABS pump motor relay (transistor)
	4	Ground
	5	–
	6	G sensor signal
	7	–
	8	–
	9	G sensor ground
	10	Left front wheel speed sensor (–)
	11	Left front wheel speed sensor (+)
	12	Stop lamp switch
	13	Left rear wheel speed sensor (+)
	14	Left rear wheel speed sensor (–)
	15	“ABS” warning lamp
	16	Data link connector
	17	–
	18	Diagnosis switch terminal
	19	–
	20	–
	21	–
	22	Idle up signal (for M13 engine model only)
	23	–
	24	4WD switch (for 4WD model only)
	25	Ignition switch
	26	–
	27	–
	28	–
	29	
	30	Right-front wheel speed sensor (–)
	31	Right-front wheel speed sensor (+)
	32	–
	33	Right-rear wheel speed sensor (+)
	34	Right-rear wheel speed sensor (–)

Table – A "ABS" Warning Lamp Circuit Check – Lamp Does Not Come "ON" at Ignition Switch ON

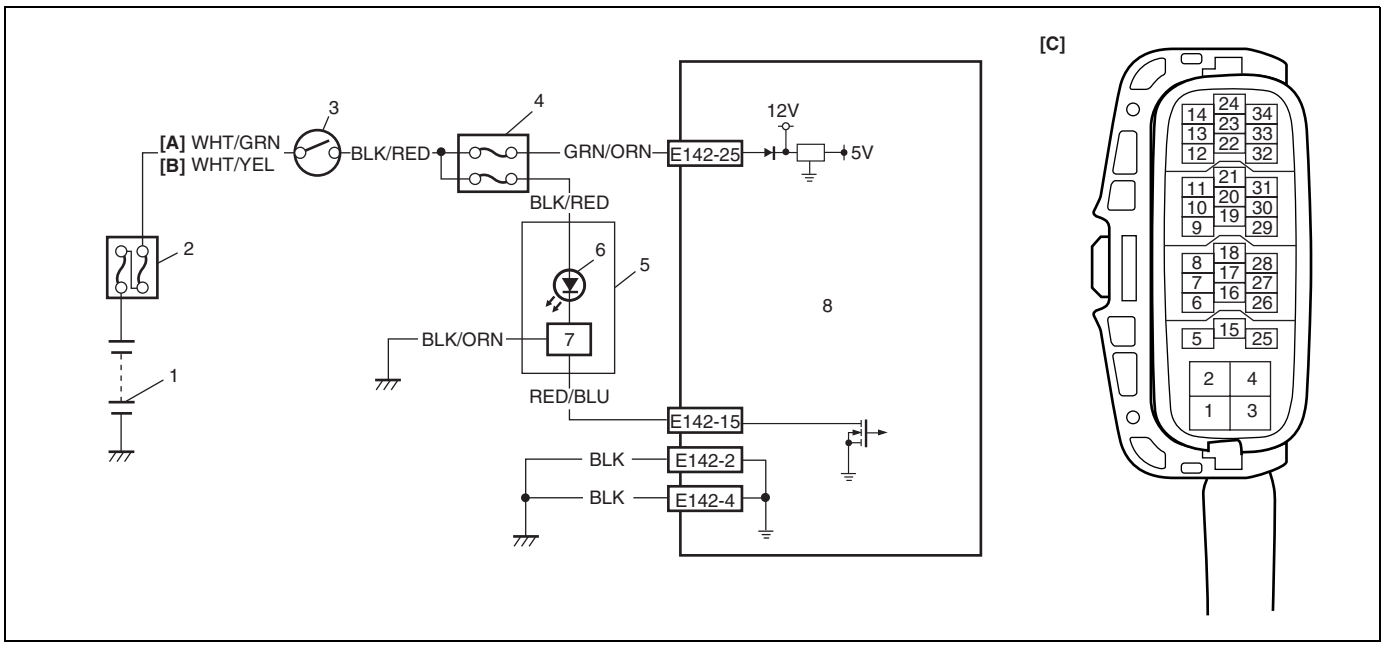

[A]: For M/T model	2. Main fuse	6. ABS warning lamp
[B]: For A/T model	3. Ignition switch	7. Lamp driver module
[C]: ABS hydraulic unit / control module connector E142 (viewed from terminal side)	4. Circuit fuse	8. ABS hydraulic unit / control module assembly
1. Battery	5. Combination meter	

Circuit Description

Operation (ON / OFF) of the "ABS" warning lamp is controlled by the ABS control module and lamp driver module.

If the Antilock brake system is in good condition, the ABS control module turns the "ABS" warning lamp ON at the ignition switch ON, keeps it ON for 2 seconds only and then turns it OFF. If an abnormality in the system is detected, the lamp is turned ON by ABS control module. Also, it is turned ON by lamp driver module when the connector of the ABS control module was disconnected.

Inspection

Step	Action	Yes	No
1	1) Turn ignition switch to ON position. Do other warning lamp come ON?	Go to step 2.	Go to step 4.
2	1) Turn ignition switch to OFF position. 2) Disconnect ABS hydraulic unit / control module connector. Does "ABS" warning lamp light with ignition switch ON?	Replace ABS hydraulic unit / control module assembly.	Go to step 3.
3	1) Remove combination meter with ignition switch turned OFF. 2) Measure resistance between "RED/BLU" wire of combination meter connector and ground. Is it infinite (∞)?	Go to Step 6.	"RED/BLU" wire circuit shorted to ground.

Step	Action	Yes	No
4	Is circuit fuse for combination meter in good condition?	Go to Step 5.	Replace fuse and check for short circuit to ground.
5	1) Remove combination meter with ignition switch turned OFF. 2) Check for proper connection to “BLK/RED” wire of combination meter connector. 3) If OK, turn ignition switch to ON and measure voltage between “BLK/RED” wire of combination meter connector and vehicle body ground. Is it 10 – 14 V?	Go to Step 6	“BLK/RED” wire circuit open
6	1) Measure resistance between “BLK/ORN” wire of combination meter connector and vehicle body ground. Is continuity indicated?	Replace combination meter.	“BLK/ORN” wire circuit open or high resistance.

Table – B “ABS” Warning Lamp Circuit Check – Lamp Comes “ON” Steady

Refer to “TABLE – A “ABS Warning Lamp Circuit Check – Lamp Does Not Come “ON” at Ignition Switch ON” for System Circuit Diagram and Circuit Description.

Inspection

Step	Action	Yes	No
1	Perform diagnostic trouble code check. Is there any DTC?	Go to Step 7 of “ABS Diagnostic Flow Table” in this section.	Go to step 2.
2	Turn ignition switch to OFF position. Is circuit fuse for ABS power source in good condition?	Go to step 3.	Replace fuse and check for short circuit to ground.
3	1) Disconnect ABS hydraulic unit / control module connector. 2) Check for proper connection to ABS hydraulic unit / control module connector at terminals “E142-25”, “E142-15”, “E142-2” and “E142-4”. 3) If OK then turn ignition switch to ON position and measure voltage between terminal “E142-25” and vehicle body ground. Is it 10 – 14 V?	Go to step 4.	“GRN/ORN” wire circuit open, or high resistance.
4	1) Connect ABS hydraulic unit / control module connector. 2) Check voltage generated by generator, referring to “Overcharged Battery” in Section 6H. Is check result OK?	Go to step 5.	Repair charging system.

Step	Action	Yes	No
5	1) Disconnect ABS hydraulic unit / control module connector 2) Turn ignition switch to ON and light the ABS warning lamp. 3) Connect terminal “E142-15” of disconnected ABS hydraulic unit / control module connector to vehicle body ground using service wire. Does “ABS” warning lamp turn off?	Go to Step 6.	“RED/BLU” wire circuit open. If wire and connection are OK, replace combination meter.
6	Turn ignition switch to OFF and measure resistance between each terminal of “E142-2” and “E142-4” to vehicle body ground. Is continuity indicated?	Substitute a known-good ABS hydraulic unit / control module assembly and recheck.	“BLK” wire circuit open or high resistance.

Table – C “ABS” Warning Lamp Circuit Check – Lamp Flashes Continuously While Ignition Switch is ON

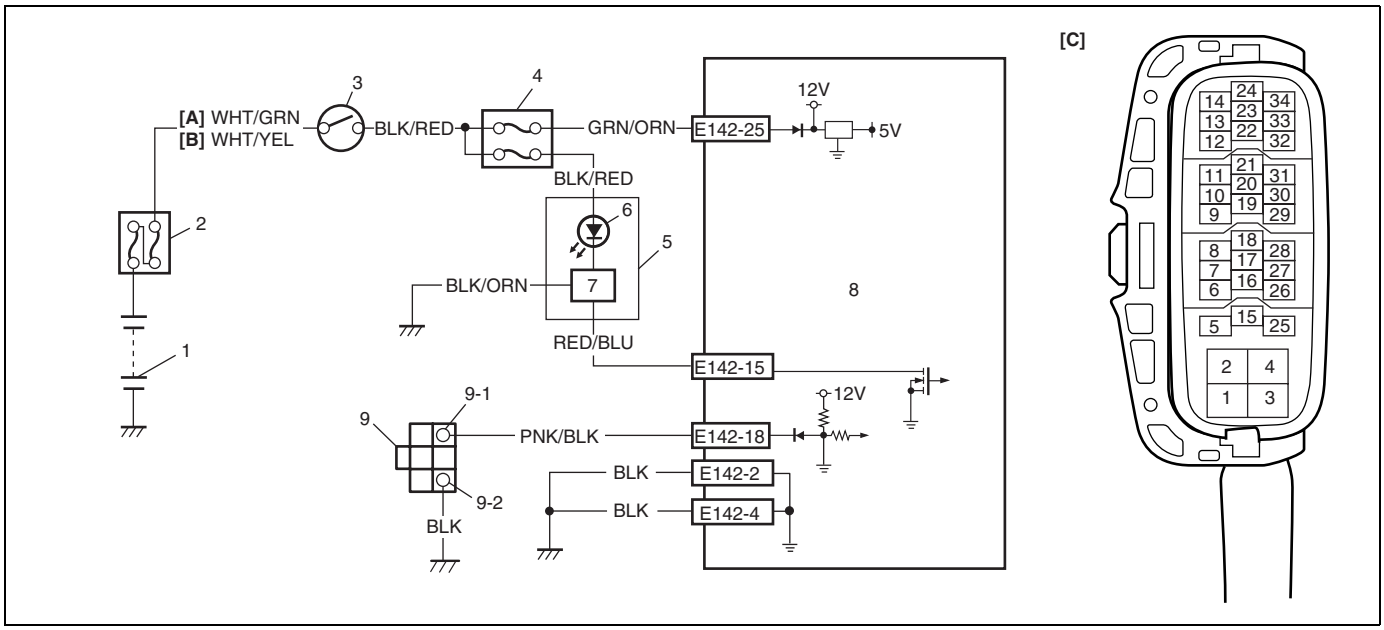

[A]: For M/T model	3. Ignition switch	8. ABS hydraulic unit / control module assembly
[B]: For A/T model	4. Circuit fuse box	9. Monitor connector
[C]: ABS hydraulic unit / control module connector E142 (viewed from terminal side)	5. Combination meter	9-1. Diag. switch terminal
1. Battery	6. ABS warning lamp	9-2. Diag. ground terminal
2. Main fuse box	7. Lamp driver module	

Circuit Description

When the diag. switch terminal is shorted or connected to the ground with the ignition switch ON, the diag. trouble code (DTC) is indicated by flashing of the “ABS” warning lamp.

Inspection

Step	Action	Yes	No
1	Is diag. switch terminal connected to ground via service wire?	Remove service wire and recheck.	Go to step 2.
2	1) Turn ignition switch to ON position. 2) Measure voltage between diag. switch terminal and vehicle body ground. Is it 10 – 14 V?	Substitute a known-good ABS hydraulic unit / control module assembly and recheck.	"PNK/BLK" wire circuit shorted to ground.

Table – D Code (DTC) is Not Outputted Even With Diag. Switch Terminal Connected to Ground.

Refer to "Table – C "ABS" Warning Lamp Circuit Check – Lamp Flashes Continuously While Ignition Switch is ON" in this section for System Circuit Diagram and Circuit Description.

Inspection

Step	Action	Yes	No
1	1) Turn ignition switch to ON position. Is it shorted diag. switch terminal and ground terminal by service wire properly?	Go to step 2.	Connect service wire securely.
2	1) Disconnect service wire. 2) Check the ABS lamp operation. Refer to ""ABS" Warning Lamp Check" in this section. Does ABS lamp operate properly?	Go to step 3.	Check "ABS" warning lamp circuit referring to "Table – A "ABS" Warning Lamp Circuit Check – Lamp Does Not Come "ON" at Ignition Switch ON", "Table – B "ABS" Warning Lamp Circuit Check – Lamp Comes "ON" Steady" or "Table – C "ABS" Warning Lamp Circuit Check – Lamp Flashes Continuously While Ignition Switch is ON" in this section.
3	1) Turn ignition switch to OFF position. 2) Disconnect ABS hydraulic unit / control module connector. 3) Check for proper connection to ABS hydraulic unit / control module at terminal "E142-18". 4) If OK, measure resistance between diag. switch terminal and "E142-18" terminal. Is it infinite (∞)?	"PNK/BLK" wire circuit open.	Go to step 4.
4	1) Measure resistance between ground terminal of monitor connector and vehicle body ground. Is continuity indicated?	Substitute a known-good ABS hydraulic unit / control module assembly and recheck.	"BLK" wire circuit open or poor connection.

DTC C1015 (DTC 15) – G Sensor Circuit

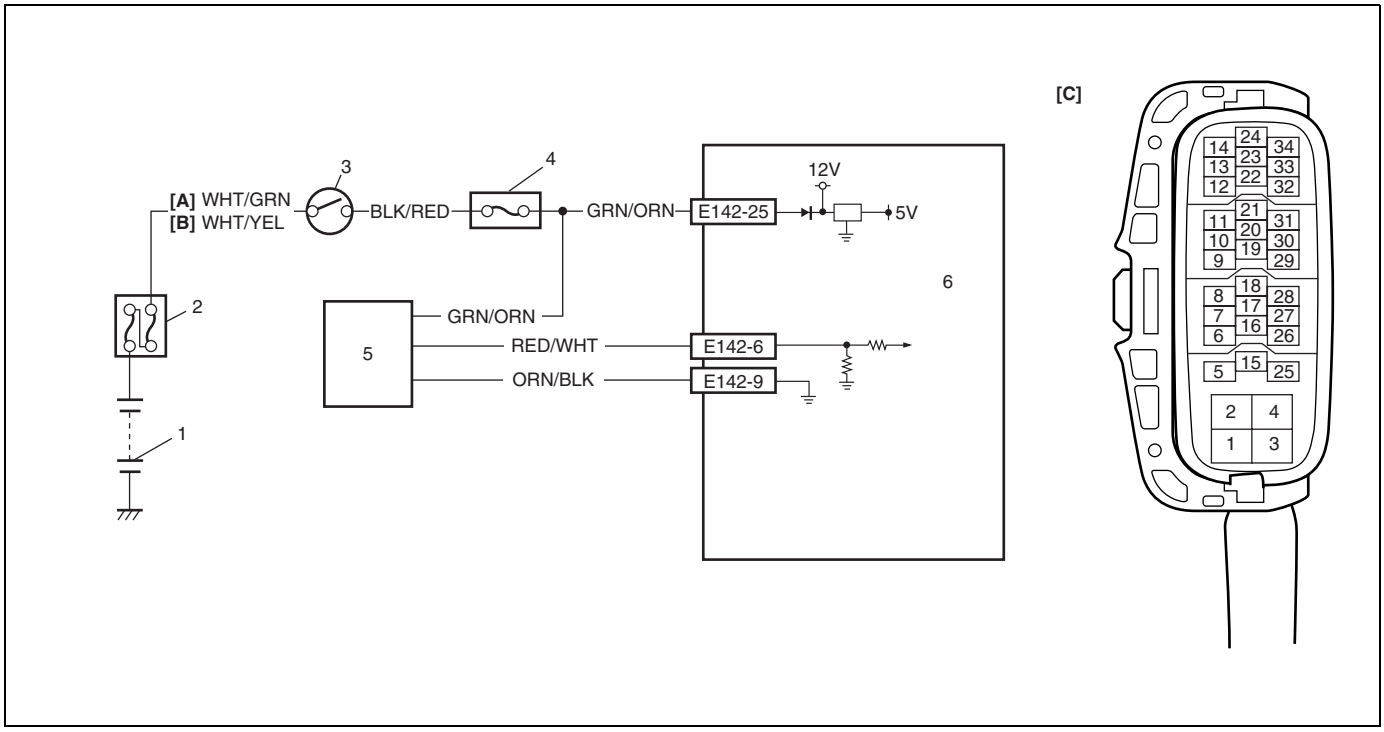

[A]: For M/T model	1. Battery	4. Circuit fuse box
[B]: For A/T model	2. Main fuse box	5. G sensor
[C]: ABS hydraulic unit / control module connector E142 (viewed from terminal side)	3. Ignition switch	6. ABS hydraulic unit / control module assembly

Description

While a vehicle is at stop and running, if the potential difference between the vehicle acceleration inferred from the signals of wheel speed sensors and the vehicle acceleration detected by the G sensor is not within the specified value, if no signal is inputted from the G sensor, this DTC will be set.
Therefore, this DTC may be set when a vehicle is lifted up and its wheel(s) is turned. In such case, clear the DTC and check again.

Inspection

Step	Action	Yes	No
1	Was “ABS Diagnostic Flow Table” performed?	Go to step 2.	Go to “ABS Diagnostic Flow Table” in this section.
2	Are DTC C1021, C1022, C1025, C1026, C1031, C1032, C1035 or C1036 indicated?	Go to applicable diag. flow.	Go to step 3.
3	Is G sensor installed floor securely?	Go to step 4.	Tighten sensor bolt securely. If not, use new bolt.
4	1) Turn ignition switch to OFF position. 2) Remove G sensor from floor. 3) Check for proper connection to G sensor. 4) If OK, then check G sensor referring to “G Sensor” in this section. Is it in good condition?	Go to step 5.	Replace G sensor.
5	1) Disconnect connectors from ABS hydraulic unit / control module assembly and G sensor. 2) Check for proper connection to ABS hydraulic / unit control module connector at terminals “E142-6” and “E142-9”. 3) If OK, then turn ignition switch to ON and measure voltage between “GRN/ORN” wire terminal of G sensor connector and vehicle body ground. Is it 10 – 14 V?	Go to step 6.	“GRN/ORN” wire circuit open.
6	Measure voltage between “RED/WHT” wire terminal of G sensor connector and vehicle body ground. Is it 0 V?	Go to step 7.	“RED/WHT” wire circuit shorted to power circuit.
7	1) Turn ignition switch to OFF position. 2) Check that “RED/WHT” wire circuit is free from open or short to ground and “ORN/BLK” wire circuit. Is it in good condition?	“ORN/BLK” wire circuit open. If circuit is OK, substitute a known-good ABS hydraulic unit / control module assembly.	“RED/WHT” wire circuit open or shorted to ground or “ORN/BLK” wire circuit.

DTC C1016 (DTC 16) – Stop Lamp Circuit

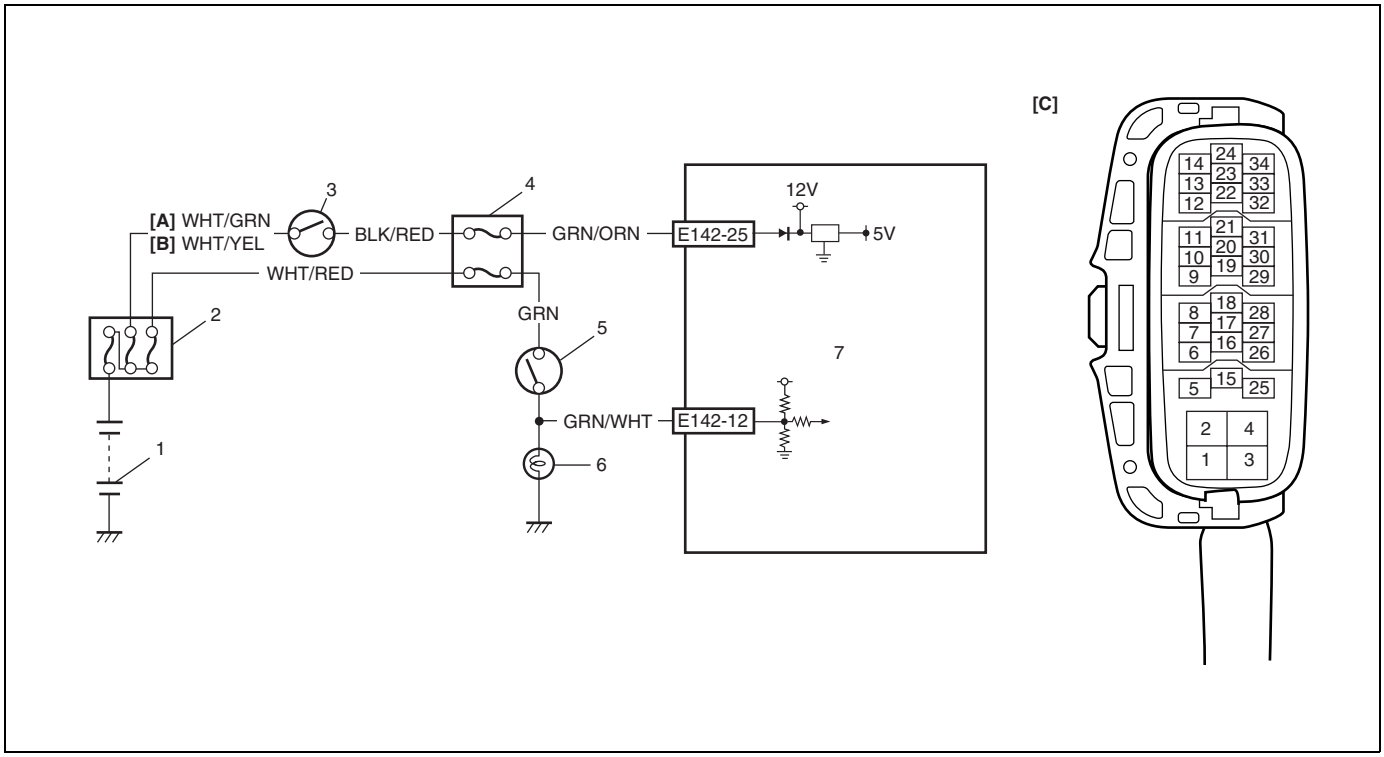

[A]: For M/T model	2. Main fuse box	6. Stop lamp
[B]: For A/T model	3. Ignition switch	7. ABS hydraulic unit / control module assembly
[C]: ABS hydraulic unit / control module connector E142 (viewed from terminal side)	4. Circuit fuse box	
1. Battery	5. Stop lamp switch	

Description

The ABS control module monitors the voltage at the “E142-12” terminal while the ignition switch is ON. When the voltage is without the specified range at terminal “E142-12”, this DTC will be set.

Inspection

Step	Action	Yes	No
1	Was “ABS Diagnostic Flow Table” performed?	Go to Step 2.	Go to “ABS Diagnostic Flow Table” in this section.
2	1) Turn ignition switch to OFF position. 2) Check for proper connection to ABS hydraulic unit / control module connector at terminals “E142-12”. 3) If OK, then measure resistance between terminal “E142-12” and vehicle body ground. Is resistance less than 440 Ω	Substitute a known-good ABS hydraulic unit / control module assembly and recheck.	“GRN/WHT” wire open or high resistance. If wire and connection are OK, check stop lamp circuit and/or bulbs.

DTC C1021 (DTC 21), DTC C1022 (DTC 22) – Right Front Wheel Speed Sensor Circuit

DTC C1025 (DTC 25), DTC C1026 (DTC 26) – Left Front Wheel Speed Sensor Circuit

DTC C1031 (DTC 31), DTC C1032 (DTC 32) – Right Rear Wheel Speed Sensor Circuit

DTC C1035 (DTC 35), DTC C1036 (DTC 36) – Left Rear Wheel Speed Sensor Circuit

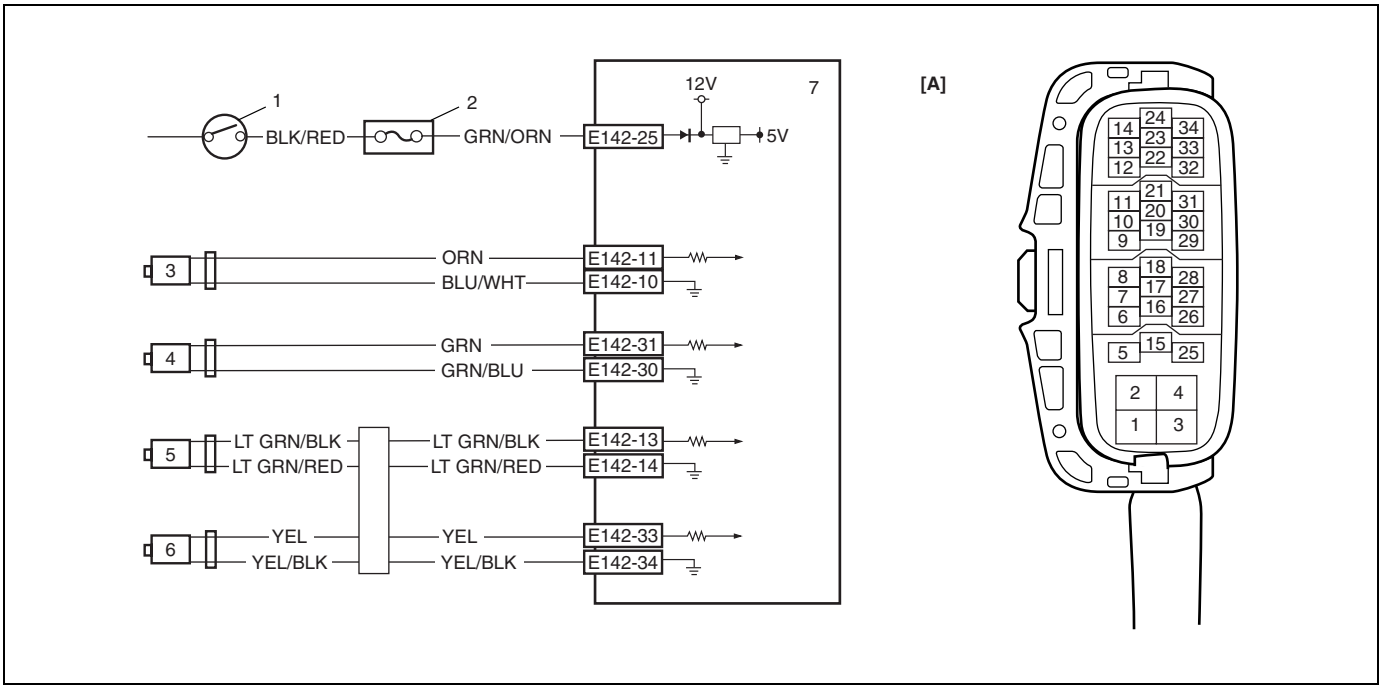

[A]: ABS hydraulic unit / control module connector E142 (viewed from control module side)	3. Left front wheel speed sensor	6. Right rear wheel speed sensor
1. Battery	4. Right front wheel speed sensor	7. ABS hydraulic unit / control module connector of harness
2. Main fuse box	5. Left rear wheel speed sensor	

Description

The ABS control module monitors the voltage at the positive (+) terminal of each sensor while the ignition switch is ON. When the voltage is not within the specified range, an applicable DTC will be set. Also, when the ABS control module detects a sensor which outputs an abnormal signal while comparing signals from wheel speed sensors, an applicable DTC will be set

NOTE:

When the vehicle was operated in any of the following ways, one of these DTC's may be set even when the sensor is in good condition. If such possibility is suspected, repair the trouble (dragging of brake, etc.) of the vehicle, clear DTC once and then after performing the driving test as described in Step 2 of "ABS DIAG. FLOW TABLE" in this section, check whether or not any abnormality exists.

- **The vehicle was driven with parking brake pulled.**
- **The vehicle was driven with brake dragging.**
- **Wheel spin occurred while driving.**
- **Wheel(s) was turned while the vehicle was jacked up.**
- **The vehicle was stuck.**

Inspection

Step	Action	Yes	No
1	Was “ABS Diagnostic Flow Table” performed?	Go to Step 2.	Go to “ABS Diagnostic Flow Table” in this section.
2	1) Turn ignition switch to OFF position. 2) Disconnect applicable ABS wheel speed sensor coupler. 3) Measure resistance between terminals of ABS wheel speed sensor. Refer to “Front Wheel Speed Sensor” and/or “Rear Wheel Speed Sensor” in this section. Is measured resistance value as specified?	Go to Step 3.	Replace ABS wheel speed sensor assembly.
3	1) Connect ABS wheel speed sensor coupler. 2) Disconnect ABS hydraulic unit / control module connector. 3) Check for proper connection to ABS hydraulic unit / control module at each sensor terminal. 4) If OK, then turn ignition switch to ON and measure voltage between sensor terminal of module connector and vehicle body ground. Is it 0 V?	Go to Step 4.	ABS wheel speed sensor circuit shorted to power.
4	1) Turn ignition switch to OFF position. 2) Measure resistance between the following points. • Both ABS hydraulic unit / control module connector terminals of the corresponding sensor. This check result should be the same as above Step 2. • Either terminal of wheel speed sensor coupler and vehicle body ground. This check result should be no continuity. Are both check results OK?	Go to Step 5.	Circuit open or shorted to ground.
5	1) Remove applicable ABS wheel speed sensor. 2) Check sensor for damage or foreign material attached. Is it in good condition?	Go to Step 4.	Clean, repair or replace.
6	Check front and/or rear sensor ring for the following (remove rear axle shaft as necessary): • Rotor serration (teeth) neither missing or damaged. • No foreign material being attached. • Rotor not being eccentric. • Wheel bearing free from excessive play. Are they in good condition?	Go to Step 7.	Clean, repair or replace.
7	Install ABS wheel speed sensor and check that there is no clearance between sensor and knuckle. Refer to “Front Wheel Speed Sensor” and/or “Rear Wheel Speed Sensor” in this section. Is it OK?	Go to Step 8.	Replace ABS wheel speed sensor.
8	Referring to “Front Wheel Speed Sensor” and/or “Reference” of “Rear Wheel Speed Sensor” in this section, check output voltage or waveform. Is specified voltage and/or waveform obtained?	Substitute a known-good ABS hydraulic unit / control module assembly and recheck.	Replace sensor and recheck.

DTC C1041 (DTC 41), DTC C1042 (DTC 42) – Right Front Solenoid Circuit
DTC C1045 (DTC 45), DTC C1046 (DTC 46) – Left Front Solenoid Circuit
DTC C1055 (DTC 55), DTC C1056 (DTC 56) – Rear Solenoid Circuit

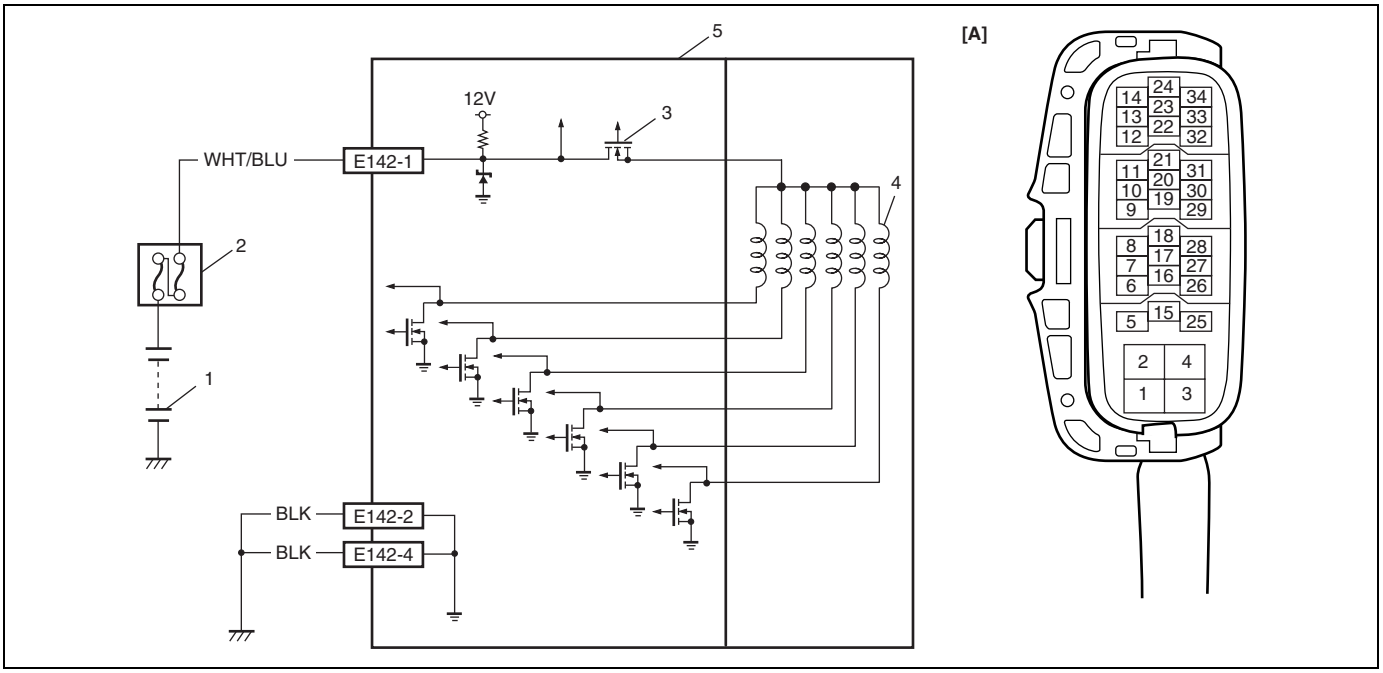

[A]: ABS hydraulic unit / control module connector E142 (viewed from terminal side)	2. Main fuse box	4. Solenoid valves
1. Battery	3. ABS solenoid valve relay (transistor)	5. ABS hydraulic unit / control module assembly

Description

The ABS control module monitors the voltage of the terminal of the solenoid circuit constantly with the ignition switch turned ON. It sets this DTC when the terminal voltage does not become low / high for the ON / OFF command to the solenoid or the voltage difference between solenoid circuit terminals exceeds the specified value with the solenoid turned OFF.

Inspection

Step	Action	Yes	No
1	Was “ABS Diagnostic Flow Table” performed?	Go to Step 2.	Go “ABS Diagnostic Flow Table” in this section.
2	1) Turn ignition switch to OFF position. 2) Disconnect ABS hydraulic unit / control module connector. 3) Check for proper connection to ABS hydraulic unit / control module connector at terminal “E142-1”, “E142-2” and “E142-4”. 4) If OK, then measure voltage between the following terminals. • Terminal “E142-1” and “E142-2”. • Terminal “E142-1” and “E142-4”. Are they 10 – 14 V?	Substitute a known-good ABS hydraulic unit / control module assembly and recheck.	“WHT/BLU” or “BLK” circuit open.

DTC C1057 (DTC 57) – Power Source Circuit

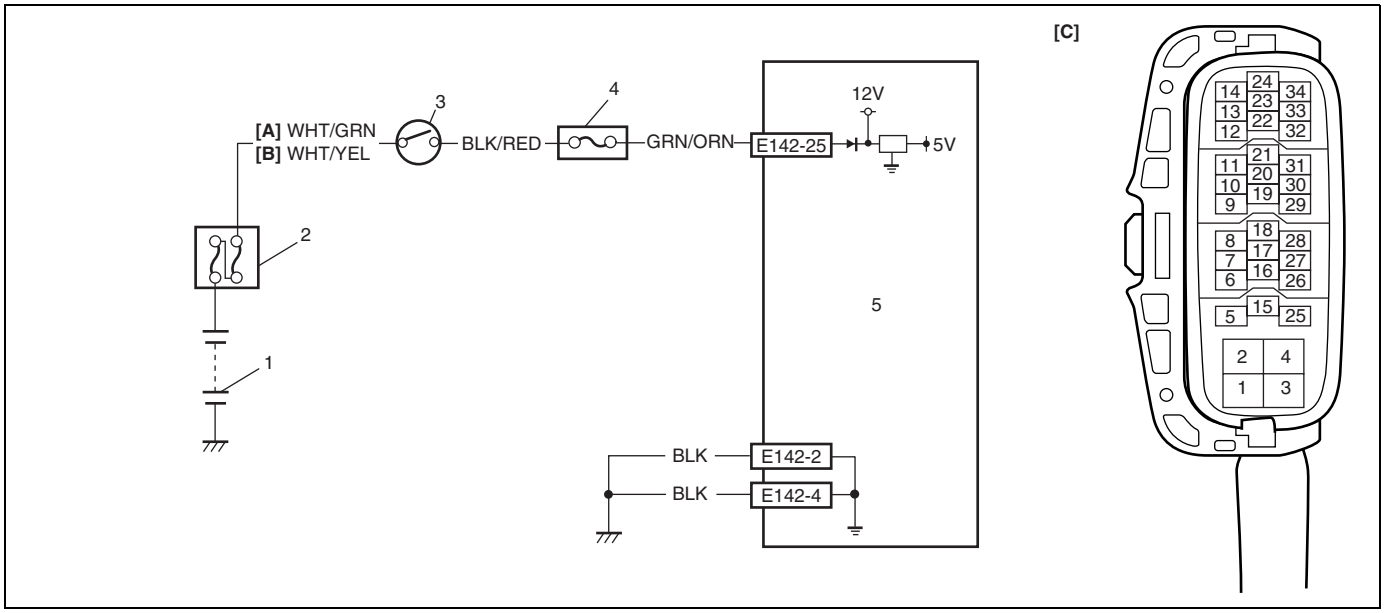

[A]: For M/T model	1. Battery	4. Circuit fuse box
[B]: For A/T model	2. Main fuse box	5. ABS hydraulic unit / control module assembly
[C]: ABS hydraulic unit / control module connector E142 (viewed from terminal side)	3. Ignition switch	

Description

The ABS control module monitors the power source voltage at terminal “E142-25”. When the power source voltage becomes extremely low, this DTC will be set. As soon as the voltage rises to the specified level, the set DTC will be cleared.

Inspection

Step	Action	Yes	No
1	Was “ABS Diagnostic Flow Table” performed?	Go to Step 2.	Go “ABS Diagnostic Flow Table” in this section.
2	Check battery voltage. Is it about 11 V or higher?	Go to Step 3.	Check charging system referring to “Undercharged Battery” in Section 6H.
3	Are main fuse and circuit fuse for ABS power source in good condition?	Go to Step 4.	Replace fuse and check for short circuit to ground.
4	1) Turn ignition switch to OFF position. 2) Disconnect ABS hydraulic unit / control module connector. 3) Check for proper connection to ABS hydraulic unit / control module connector at terminal “142-25”, “E142-2” and “E142-4”. 4) If OK, then turn ignition switch to ON and measure voltage between the following terminals. • Terminal “E142-25” and “E142-2”. • Terminal “E142-25” and “E142-4”. Are they 10 – 14 V?	Substitute a known-good ABS hydraulic unit / control module assembly and recheck.	“GRN/ORN” or “BLK” wire circuit open or high resistance.

DTC C1061 (DTC 61) – ABS Pump Motor Circuit

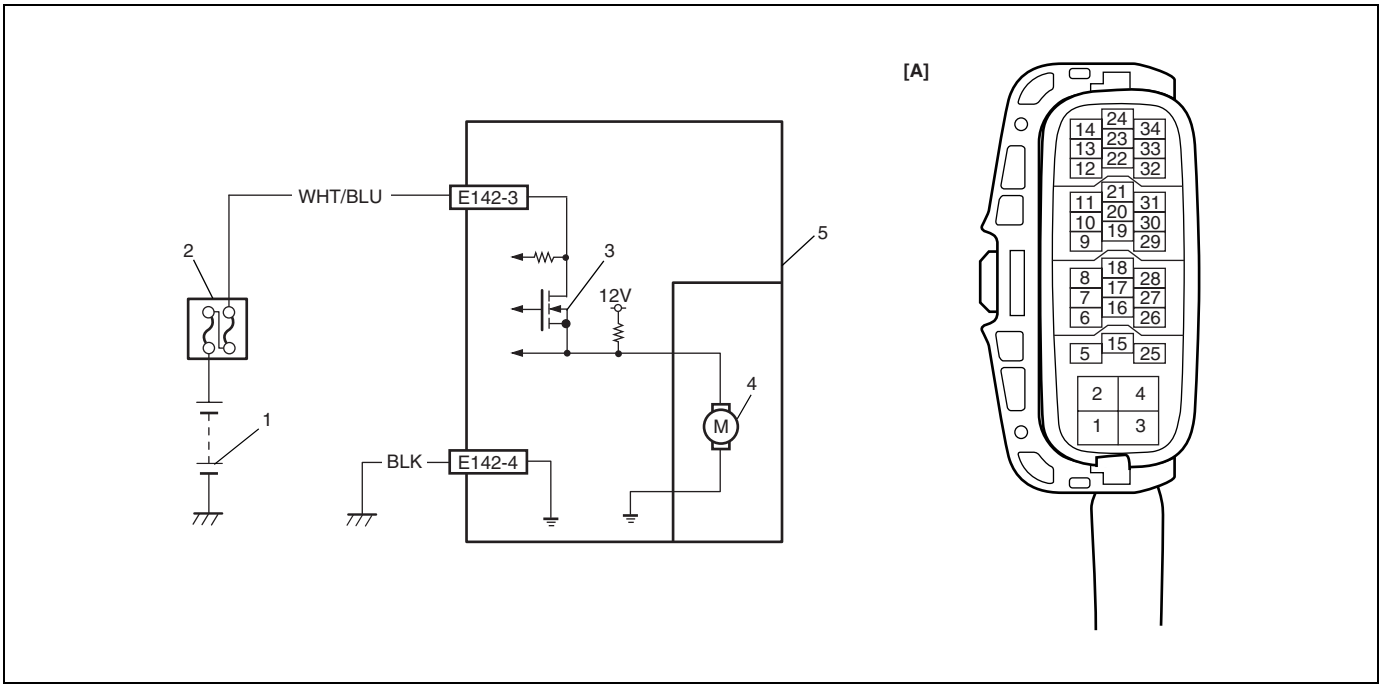

[A]:	ABS hydraulic unit / control module connector E142 (viewed from terminal side)	2.	Main fuse box	4.	ABS pump motor
1.	Battery	3.	ABS pump motor relay (transistor)	5.	ABS hydraulic unit / control module assembly

Description

The ABS control module monitors the voltage at monitor terminal of pump motor circuit constantly with the ignition switch turned ON. When monitor signal of pump motor relay is different from command signal, this DTC will be set.

Inspection

Step	Action	Yes	No
1	Was “ABS Diagnostic Flow Table” performed?	Go to Step 2.	Go “ABS Diagnostic Flow Table” in this section.
2	1) Turn ignition switch to OFF position 2) Disconnect ABS hydraulic unit / control module connector. 3) Check for proper connection to ABS hydraulic unit / control module connector at terminal “E142-3” and “E142-4”. 4) If OK, then measure voltage between terminal “E142-3” and “E142-4”. Is it 10 – 14 V?	Substitute a known-good ABS hydraulic unit / control module assembly and recheck.	“WHT/BLU” or “BLK” wire circuit open.

DTC C1063 (DTC 63) – ABS Fail Safe Circuit

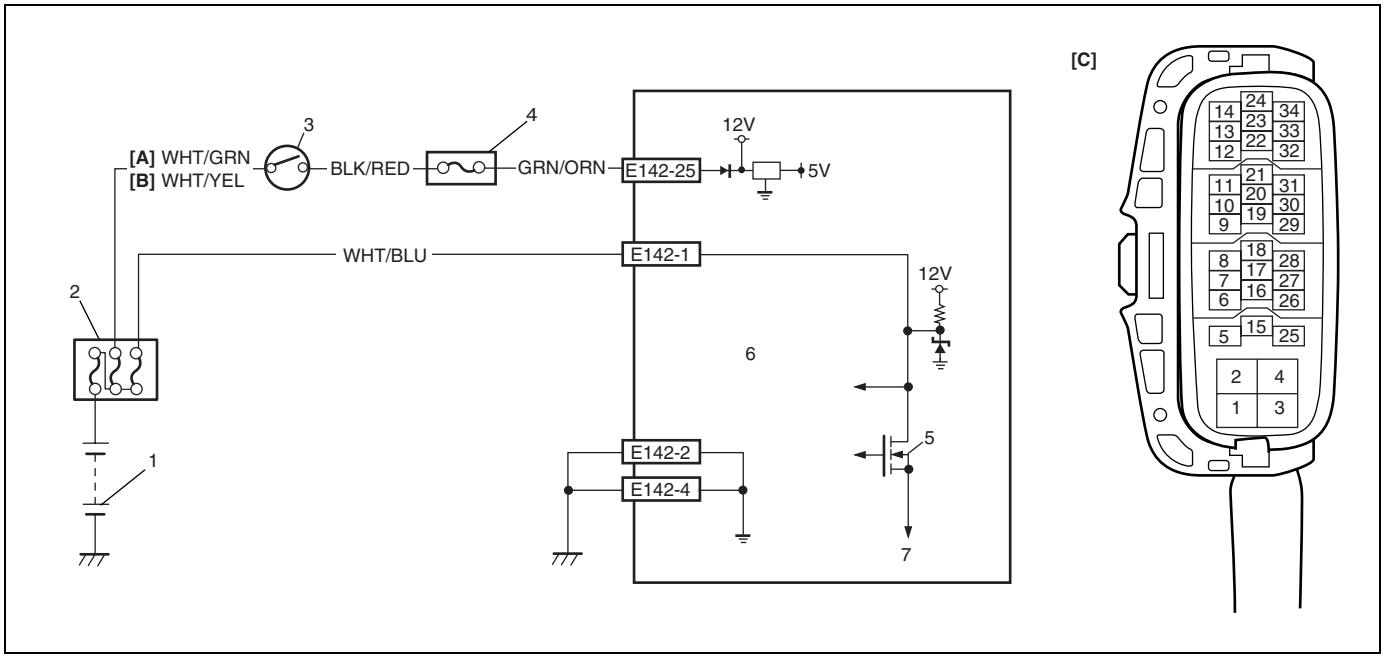

[A]: For M/T model	2. Main fuse box	6. ABS hydraulic unit / control module assembly
[B]: For A/T model	3. Ignition switch	7. To solenoid valves
[C]: ABS hydraulic unit / control module connector E142 (viewed from terminal side)	4. Circuit fuse box	
1. Battery	5. ABS solenoid valve relay (transistor)	

Description

The ABS control module monitors the voltage at monitor terminal of solenoid circuit constantly with the ignition switch turned ON. When monitor signal of solenoid valve relay is different from command signal, this DTC will be set.

Inspection

Step	Action	Yes	No
1	Was “ABS Diagnostic Flow Table” performed?	Go to Step 2.	Go “ABS Diagnostic Flow Table” in this section.
2	Check battery voltage. Is it about 11 V or higher?	Go to Step 3.	Check charging system referring to “Undercharged Battery” in Section 6H.
3	Is main fuse for ABS solenoid in good condition?	Go to Step 4.	Replace fuse and check for short circuit to ground.
4	1) Turn ignition switch to OFF position. 2) Disconnect ABS hydraulic unit / control module connector. 3) Check for proper connection to ABS hydraulic unit / control module at terminal “E142-1”. 4) If OK, then measure voltage between terminal “E142-1” and vehicle body ground. Is it 10 – 14 V?	Substitute a known-good ABS hydraulic unit / control module assembly and recheck.	“WHT/BLU” wire circuit open or short to ground.

DTC C1071 (DTC 71) – ABS Control Module

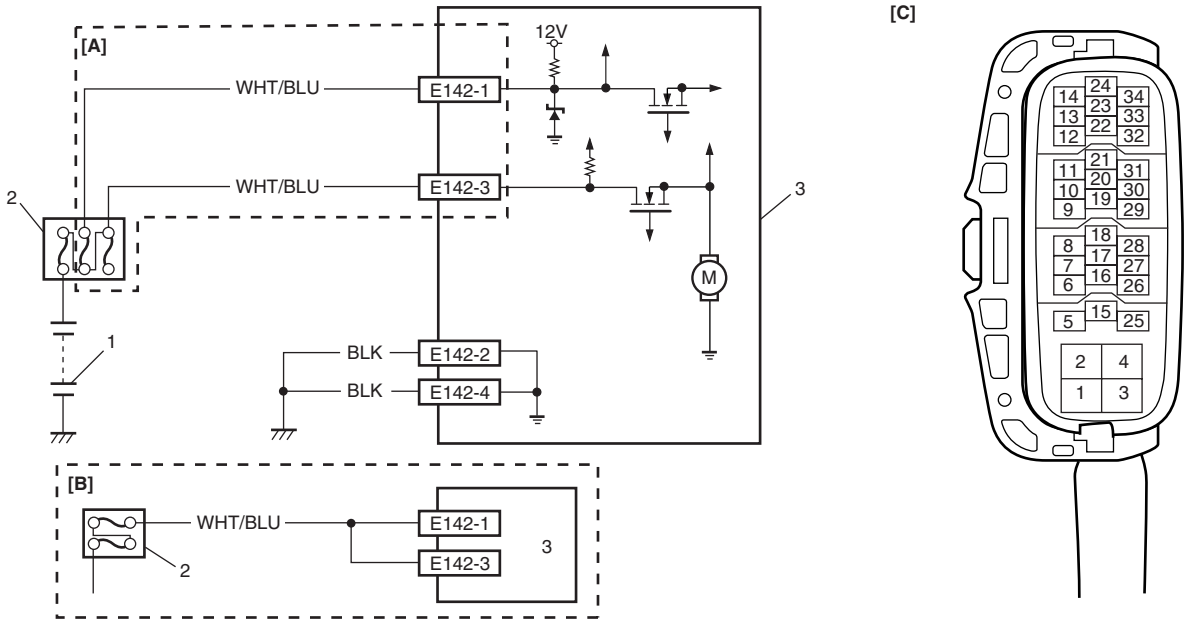

[A]: For M13 engine model	[C]: ABS hydraulic unit / control module connector E142 (viewed from control module side)	2. Main fuse box
[B]: For K9K engine model	1. Battery	3. ABS hydraulic unit / control module assembly

Description

This DTC will be set when an internal fault is detected in the ABS control module.

Inspection

Step	Action	Yes	No
1	Was “ABS Diagnostic Flow Table” performed?	Go to Step 2.	Go to “ABS Diagnostic Flow Table” in this section.
2	Clear all DTCs and check DTC. Is it DTC C1071 (DTC 71)?	Go to Step 3.	Could be a temporary malfunction of the ABS control module.
3	1) Check for proper connection of ABS hydraulic unit / control module connector. 2) If OK, disconnect ABS hydraulic unit / control module connector and check the followings. • Voltage “E142-1” terminal: 10 – 14 V • Voltage “E142-3” terminal: 10 – 14 V • Resistance between each terminal of “E142-2”, “E142-4” and vehicle body ground: Continuity Are the check result as specified above?	Replace ABS hydraulic unit / control module assembly.	Repair “WHT/BLU” wire and/or “BLK” wire circuit and recheck.

On-Vehicle Service

Precaution

When connectors are connected to ABS hydraulic unit / control module assembly, do not disconnect connectors of sensors, fuse etc. and turn ignition switch ON. Then DTC will be set in ABS control module.

ABS Hydraulic Unit Operation Check

Using SUZUKI Scan Tool

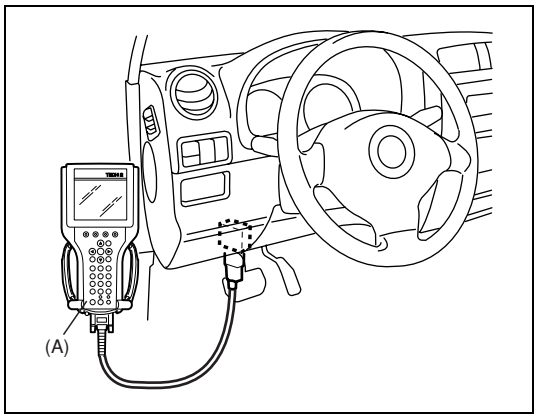

1) Connect SUZUKI scan tool to data link connector (DLC) (1) with ignition switch OFF.

Special tool
(A): SUZUKI scan tool

2) Perform ABS hydraulic unit operation check. Refer to SUZUKI scan tool operator's manual for details.

Not Using SUZUKI Scan Tool

1) Check that basic brake system other than ABS is in good condition.

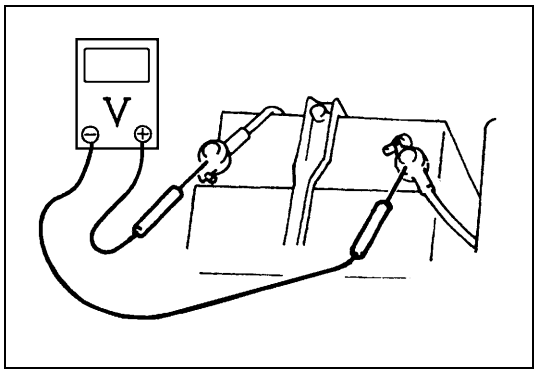

2) Check that battery voltage is 11 V or higher.
3) With “ABS” warning lamp, check that no abnormality is detected in ABS. Refer to “Diagnostic Trouble Code (DTC) Check” in this section.
4) Lift up vehicle.
5) Set transmission to neutral and release parking brake.
6) Turn each wheel gradually by hand to check if brake dragging occurs. If it does, correct.

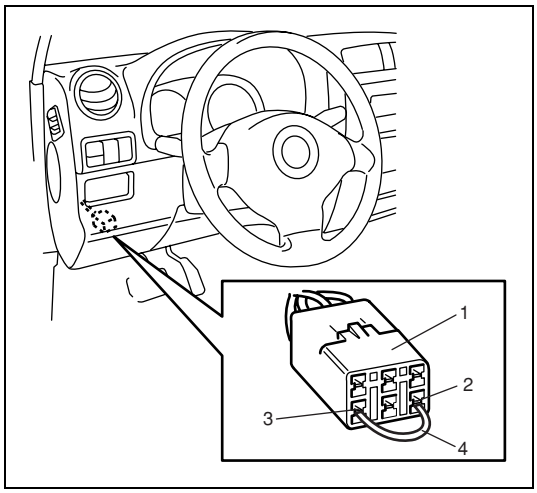

7) With diag. switch terminal (2) of monitor connector (1) connected to ground terminal (3) by using service wire (4), turn ignition switch ON and check if “ABS” warning lamp indicates DTC 12.
   If malfunction DTC is indicated, repair it first.
8) Turn ignition switch to OFF position.

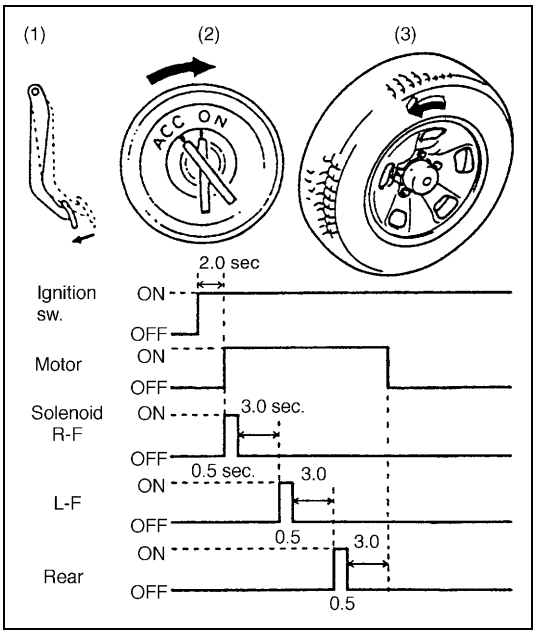

9) Perform following checks with help of another person.
   Brake pedal (1) should be depressed and then ignition switch (2) turned ON by one person and wheel (3) should be turned by another person's hand. At this time, check that:
   - Operation sound of solenoid is heard and wheel turns only about 0.5 sec (Brake force is depressurized).
   - Operation sound of pump motor is heard and pulsation is felt at brake pedal.
10) If all 4-wheels cannot be checked during one ignition cycle (OFF → ON), repeat Steps 8) and 9) till all 4 wheels are checked.
    If a faulty condition is found in Steps 9) and 10), replace hydraulic unit.
11) Turn ignition switch to OFF position.
12) Remove service wire from monitor connector.

ABS Hydraulic Unit / Control Module Assembly

CAUTION:

Do not disassemble ABS hydraulic unit / control module assembly, loosen blind plug or remove motor. Performing any of these prohibited services will affect original performance of ABS hydraulic unit / control module assembly.

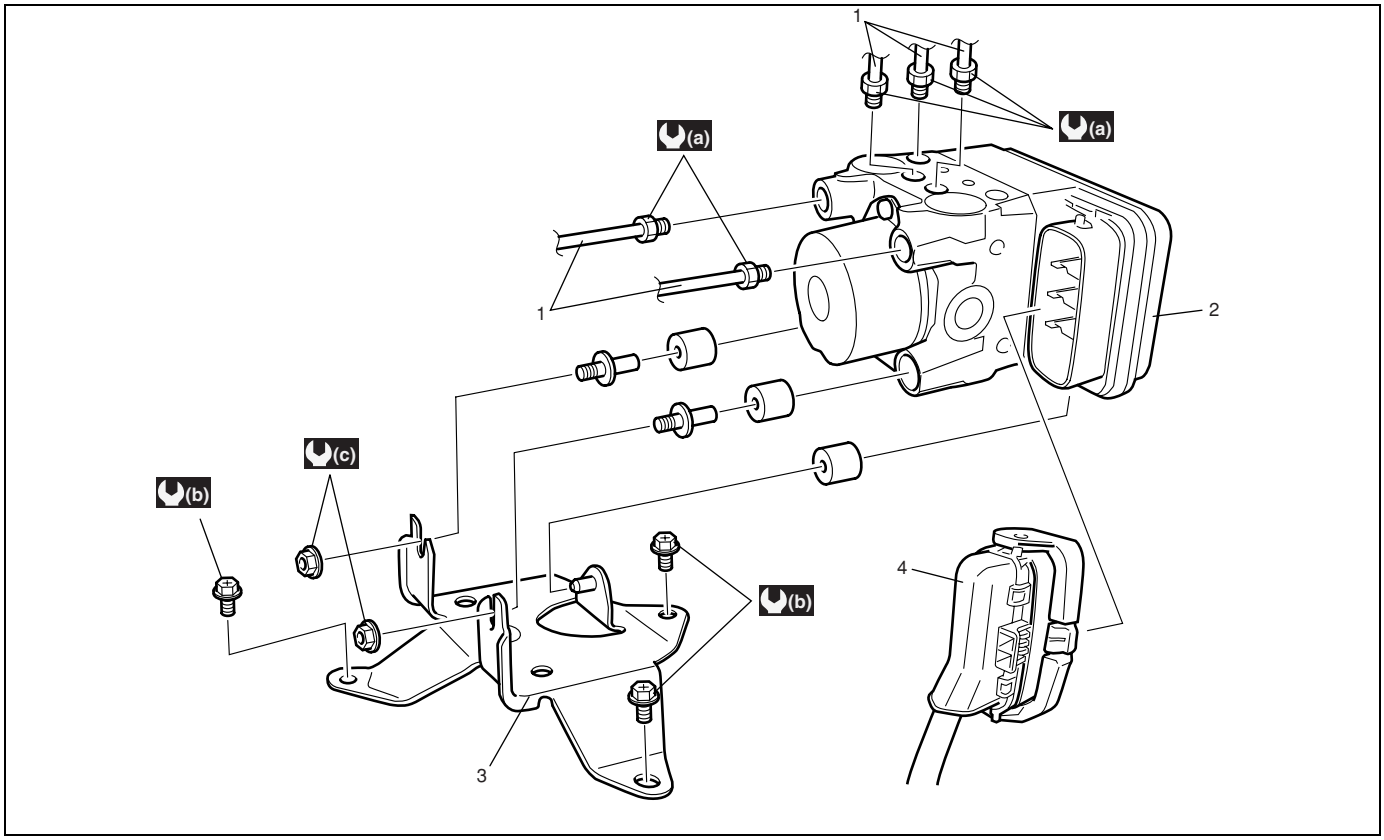

1. Brake pipe	4. ABS hydraulic unit / control module connector	(c) 11 N·m (1.1 kg-m, 8.0 lb-ft)
2. ABS hydraulic unit / control module assembly	(a) 16 N·m (1.6 kg-m, 11.5 lb-ft)	
3. Bracket	(b) 11 N·m (1.1 kg-m, 8.0 lb-ft)	

Hydraulic Unit Inspection

Check hydraulic unit for fluid leakage.
If any, repair or replace.

Removal

1) Disconnect negative cable at battery.
2) Disconnect ABS hydraulic unit / control module connector (1).

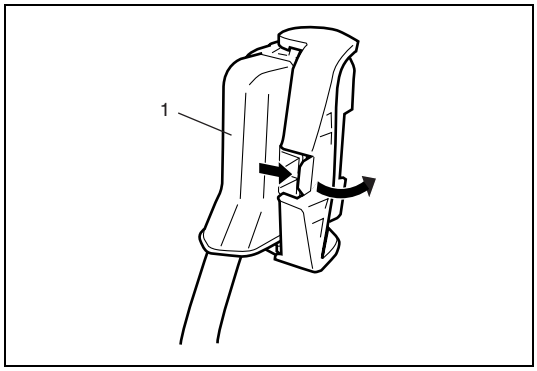

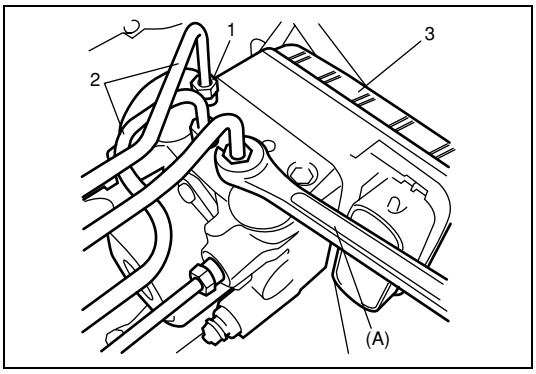

3) Using special tool, loosen flare nuts (1) and disconnect brake pipes (2) from ABS hydraulic unit / control module assembly (3).

Special tool
(A) : 09950-78220

NOTE:

Put bleeder plug cap onto pipe to prevent fluid from spilling. Do not allow brake fluid to get on painted surfaces.

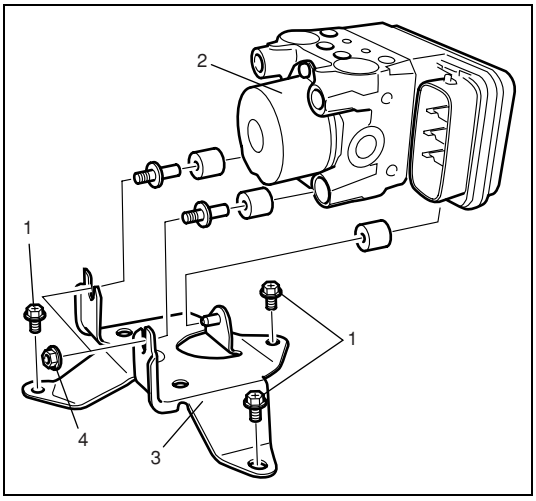

4) Remove three bolts (1), and remove ABS hydraulic unit / control module assembly (2) with bracket (3).
5) Remove two nuts (4) and take out ABS hydraulic unit / control module assembly (2) from bracket (3).

CAUTION:

- **Do not give an impact to hydraulic unit.**
- **Use care not to allow dust to enter hydraulic unit.**
- **Do not place hydraulic unit on its side or upside down. Handling it in inappropriate way will affect its original performance.**

Installation

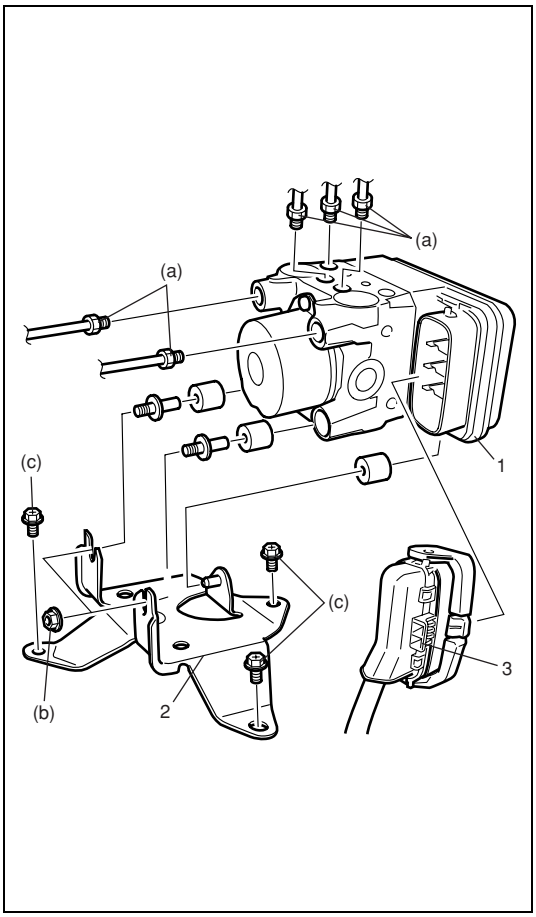

1) Install hydraulic unit by reversing removal procedure.

Tightening torque
Brake pipe flare nut
(a): 16 N·m (1.6 kg-m, 12.0 lb-ft)
ABS hydraulic unit / control module assembly bracket bolt
(b): 11 N·m (1.1 kg-m, 8.0 lb-ft)
ABS hydraulic unit / control module assembly nut
(c): 11 N·m (1.1 kg-m, 8.0 lb-ft)

2) Bleed air from brake system referring to “Air Bleeding of Brake System” in Section 5.
3) Perform hydraulic unit operation check for check fluid leakage and each brake pipe are installed properly.

NOTE:

For new ABS hydraulic unit / control module assembly, if “ABS Hydraulic Unit Operation Check” procedure has not been performed, “ABS” warning lamp may flash when ignition switch is turned ON position.
Accordingly perform “ABS Hydraulic Unit Operation Check” to stop flashing of ABS warning lamp.

1. ABS hydraulic unit / control module assembly
2. Bracket
3. ABS hydraulic unit / control module connector

Tightening Torque Specification

Fastening part	Tightening torque		
	N•m	kg-m	lb-ft
Brake pipe flare nut	16	1.6	11.6
ABS hydraulic unit / control module assembly bracket bolt	11	1.1	8.0
ABS hydraulic unit / control module assembly nut	11	1.1	8.0
Front wheel speed sensor bolt	10	1.0	7.2
Front wheel speed sensor harness clamp bolt	10	1.0	7.2
Rear wheel speed sensor bolt	10	1.0	7.2
Rear wheel speed sensor harness clamp bolt	10	1.0	7.2
G sensor bolts	23	2.3	17.0

SECTION 6-1

ENGINE GENERAL INFORMATION AND DIAGNOSIS (M13 ENGINE WITHOUT VVT)

WARNING:

For vehicles equipped with a Supplemental Restraint (Air Bag) System:

- **Service on and around the air bag system components or wiring must be performed only by an authorized SUZUKI dealer. Refer to "Air Bag System Components and Wiring Location View" under "General Description" in air bag system section in order to confirm whether you are performing service on or near the air bag system components or wiring. Please observe all WARNINGS and "Service Precautions" under "On-Vehicle Service" in air bag system section before performing service on or around the air bag system components or wiring. Failure to follow WARNINGS could result in unintentional activation of the system or could render the system inoperative. Either of these two conditions may result in severe injury.**
- **Technical service work must be started at least 90 seconds after the ignition switch is turned to the "LOCK" position and the negative cable is disconnected from the battery. Otherwise, the system may be activated by reserve energy in the Sensing and Diagnostic Module (SDM).**

NOTE:

Whether the following systems (parts) are used in the particular vehicle or not depends on vehicle specifications. Be sure to bear this in mind when performing service work.

- **EGR valve**
- **Heated oxygen sensor or CO adjusting resistor**
- **Three-way catalytic converter (TWC) and warm up three-way catalytic converter (WU-TWC)**

CONTENTS

General Information 6-1-3
Statement on Cleanliness and Care 6-1-3
Precaution 6-1-3
Precaution on engine service 6-1-3
Precaution on fuel system service 6-1-4
Fuel pressure relief procedure 6-1-5
Fuel leakage check procedure 6-1-5
Diagnosis 6-1-6
Engine Diagnosis General Description 6-1-6
On-Board Diagnostic System Description 6-1-7
Precaution in Diagnosing Trouble for Engine 6-1-8
Engine and Emission Control System Check 6-1-9
Malfunction Indicator Lamp (MIL) Check 6-1-12
Diagnostic Trouble Code (DTC) Check 6-1-12
Diagnostic Trouble Code (DTC) Clearance 6-1-13
Diagnostic Trouble Code (DTC) Table 6-1-15
Fail-Safe Table 6-1-16
Visual Inspection 6-1-17
Engine Basic Inspection 6-1-18
Engine Symptom Diagnosis 6-1-21
Scan Tool Data 6-1-27
Inspection of ECM and Its Circuits 6-1-32
Component Location 6-1-51
Table A-1 Malfunction Indicator Lamp Circuit Check – Lamp Does Not Come "ON" at Ignition Switch ON (But Engine at Stop) 6-1-52
Table A-2 Malfunction Indicator Lamp Circuit Check – Lamp Remains "ON" after Engine Starts 6-1-53
Table A-3 Malfunction Indicator Lamp Circuit Check – MIL Flashes at Ignition Switch ON 6-1-54

Table A-4 Malfunction Indicator Lamp Circuit Check – MIL Does Not Flash, Just Remains ON or Just Remains OFF Even with Grounding Diagnosis Switch Terminal 6-1-54
Table A-5 ECM Power and Ground Circuit Check – MIL Doesn't Light with Ignition Switch ON and Engine Doesn't Start Though It is Cranked Up 6-1-55
DTC P0105 (DTC No.11) Manifold Absolute Pressure (MAP) Circuit Malfunction..... 6-1-58
DTC P0110 (DTC No.18) Intake Air Temp. (IAT) Circuit Malfunction 6-1-60
DTC P0115 (DTC No.19) Engine Coolant Temperature (ECT) Circuit Malfunction..... 6-1-62
DTC P0120 (DTC No.13) Throttle Position Circuit Malfunction 6-1-64
DTC P0130 (DTC No.14) Heated Oxygen Sensor (HO2S) Circuit Malfunction..... 6-1-66
DTC P0135 (DTC No.14) Heated Oxygen Sensor (HO2S) Heater Circuit Malfunction..... 6-1-68
DTC P0325 (DTC No.17) Knock Sensor Circuit Malfunction 6-1-70
DTC P0335 (DTC No.23) Crankshaft Position (CKP) Sensor Circuit Malfunction 6-1-72
DTC P0340 (DTC No.15) Camshaft Position (CMP) Sensor Circuit Malfunction 6-1-74
DTC P0500 (DTC No.16) Vehicle Speed Sensor (VSS) Malfunction 6-1-76
DTC P1570 (DTC No.21) ABS Signal Circuit Malfunction 6-1-78
Table B-1 Fuel Injector Circuit Check 6-1-79
Table B-2 Fuel Pump and Its Circuit Check.....6-1-80
Table B-3 Fuel Pressure Check.....6-1-82
Table B-4 Idle Air Control System Check.....6-1-84
Table B-5 A/C Signal Circuits Check (Vehicle with A/C) 6-1-88
Table B-6 Electric Load Signal Circuit Check.....6-1-90
Table B-7 A/C Condenser Fan Control System Check.....6-1-92
Special Tool 6-1-94

General Information

Statement on Cleanliness and Care

An automobile engine is a combination of many machined, honed, polished and lapped surfaces with tolerances that are measured in the thousands of an millimeter (ten thousands of an inch).
Accordingly, when any internal engine parts are serviced, care and cleanliness are important.
Throughout this section, it should be understood that proper cleaning and protection of machined surfaces and friction areas is part of the repair procedure. This is considered standard shop practice even if not specifically stated.

- A liberal coating of engine oil should be applied to friction areas during assembly to protect and lubricate the surfaces on initial operation.
- Whenever valve train components, pistons, piston rings, connecting rods, rod bearings, and crankshaft journal bearings are removed for service, they should be retained in order.
  At the time of installation, they should be installed in the same locations and with the same mating surfaces as when removed.
- Battery cables should be disconnected before any major work is performed on the engine.
  Failure to disconnect cables may result in damage to wire harness or other electrical parts.

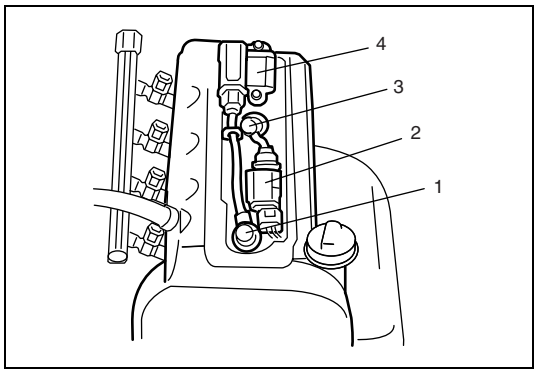

- Throughout this manual, the four cylinders of the engine are identified by numbers; No.1 (1), No.2 (2), No.3 (3) and No.4 (4) counted from crankshaft pulley side to flywheel side.

Precaution

Precaution on engine service

THE FOLLOWING INFORMATION ON ENGINE SERVICE SHOULD BE NOTED CAREFULLY, AS IT IS IMPORTANT IN PREVENTING DAMAGE, AND IN CONTRIBUTING TO RELIABLE ENGINE PERFORMANCE.

- When raising or supporting engine for any reason, do not use a jack under oil pan. Due to small clearance between oil pan and oil pump strainer, jacking against oil pan may cause it to be bent against strainer resulting in damaged oil pick-up unit.
- It should be kept in mind, while working on engine, that 12-volt electrical system is capable of violent and damaging short circuits.
  When performing any work where electrical terminals can be grounded, ground cable of the battery should be disconnected at battery.
- Any time the air cleaner, throttle body or intake manifold is removed, the intake opening should be covered. This will protect against accidental entrance of foreign material which could follow intake passage into cylinder and cause extensive damage when engine is started.

Precaution on fuel system service

- Work must be done with no smoking, in a well-ventilated area and away from any open flames.
- As fuel feed line (between fuel pump and fuel delivery pipe) is still under high fuel pressure even after engine was stopped, loosening or disconnecting fuel feed line directly may cause dangerous spout of fuel to occur where loosened or disconnected.
  Before loosening or disconnecting fuel feed line, make sure to release fuel pressure according to “Fuel Pressure Relief Procedure”. A small amount of fuel may be released after the fuel line is disconnected. In order to reduce the chance of personal injury, cover the fitting to be disconnected with a shop cloth. Put that cloth in an approved container when disconnection is completed.
- Never run engine with fuel pump relay disconnected when engine and exhaust system are hot.

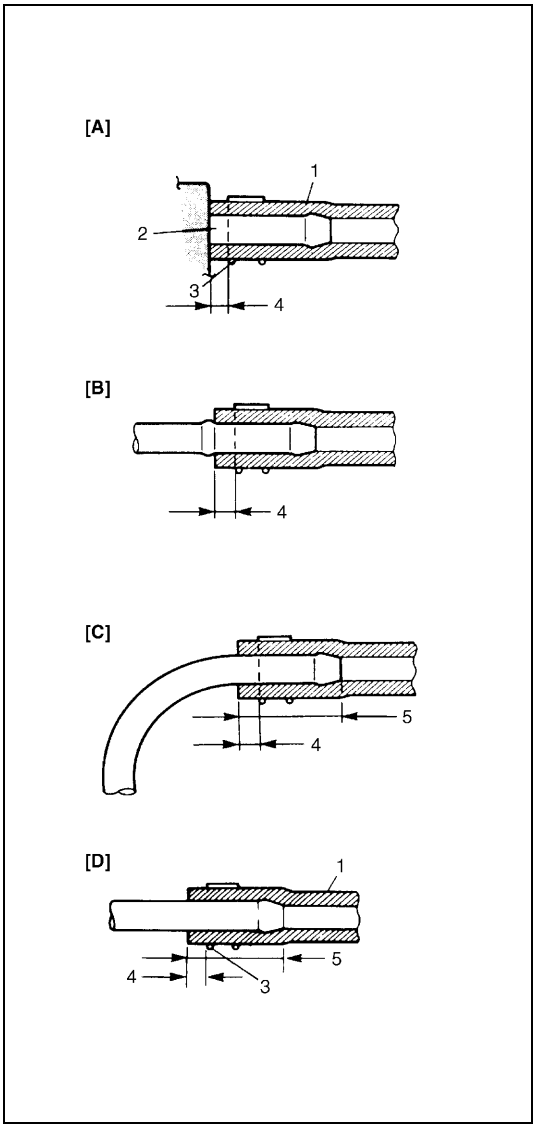

- Fuel or fuel vapor hose connection varies with each type of pipe. When reconnecting fuel or fuel vapor hose, be sure to connect and clamp each hose correctly referring to the figure Hose Connection.
  After connecting, make sure that it has no twist or kink.

[A]:	With short pipe, fit hose as far as it reaches pipe joint as shown.
[B]:	With following type pipe, fit hose as far as its peripheral projection as shown.
[C]:	With bent pipe, fit hose as its bent part as shown or till pipe is about 20 to 30 mm (0.79 – 1.18 in.) into the hose.
[D]:	With straight pipe, fit hose till pipe is, about 20 to 30 mm (0.79 – 1.18 in.) into the hose.
1.	Hose
2.	Pipe
3.	Clamp
4.	Clamp securely at a position 3 to 7 mm (0.1 2 – 0.27 in.) from hose end.
5.	20 to 30 mm (0.79 – 1.18 in.)

- When installing injector or fuel delivery pipe, lubricate its O-ring with spindle oil or gasoline.
- When connecting fuel pipe flare nut, first tighten flare nut by hand and then tighten it to specified torque.

Fuel pressure relief procedure

CAUTION:
This work must not be done when engine is hot. If done so, it may cause adverse effect to catalyst.

After making sure that engine is cold, release fuel pressure as follows.

1) Place transmission gear shift lever in “Neutral” (Shift selector lever to “P” range for A/T model), set parking brake, and block drive wheels.
2) Remove relay box cover.

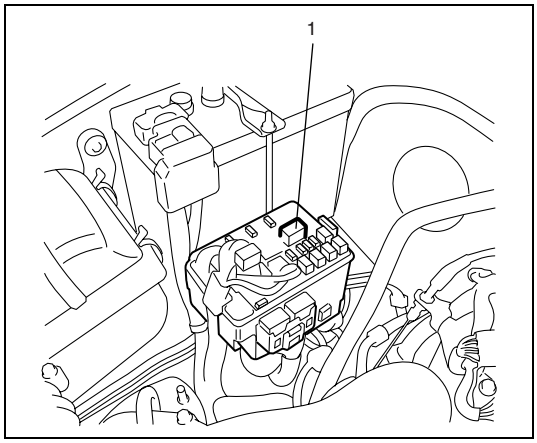

3) Disconnect fuel pump relay (1) from its connector.
4) Remove fuel filler cap to release fuel vapor pressure in fuel tank and then reinstall it.
5) Start engine and run it till it stops for lack of fuel. Repeat cranking engine 2-3 times for about 3 seconds each time to dissipate fuel pressure in lines. Fuel connections are now safe for servicing.
6) Upon completion of servicing, connect fuel pump relay (1) to its connector securely.

Fuel leakage check procedure

After performing any service on fuel system, check to make sure that there are no fuel leakages as follows.

1) Turn ON ignition switch for 3 seconds (to operate fuel pump) and then turn it OFF.
   Repeat this (ON and OFF) 3 or 4 times and apply fuel pressure to fuel line. (till fuel pressure is felt by hand placed on fuel feed hose.)
2) In this state, check to see that there are no fuel leakages from any part of fuel system.

Diagnosis

Engine Diagnosis General Description

This vehicle is equipped with an engine and emission control system which are under control of ECM.
The engine and emission control system in this vehicle are controlled by ECM. ECM has an On-Board Diagnostic system which detects a malfunction in this system and abnormality of those parts that influence the engine exhaust emission. When diagnosing engine troubles, be sure to have full understanding of the outline of “On-Board Diagnostic System” and each item in “Precaution in Diagnosing Trouble” and execute diagnosis according to “Engine and Emission Control System Check”.
There is a close relationship between the engine mechanical, engine cooling system, ignition system, exhaust system, etc. and the engine and emission control system in their structure and operation. In case of an engine trouble, even when the malfunction indicator lamp (MIL) doesn’t turn ON, it should be diagnosed according to this flow table.

On-Board Diagnostic System Description

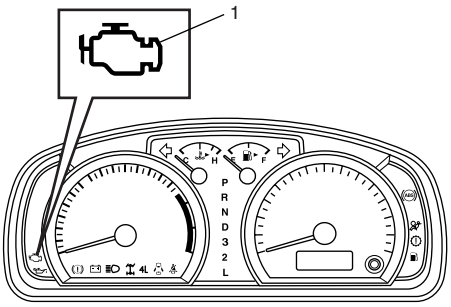

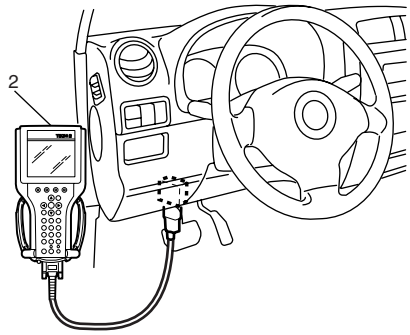

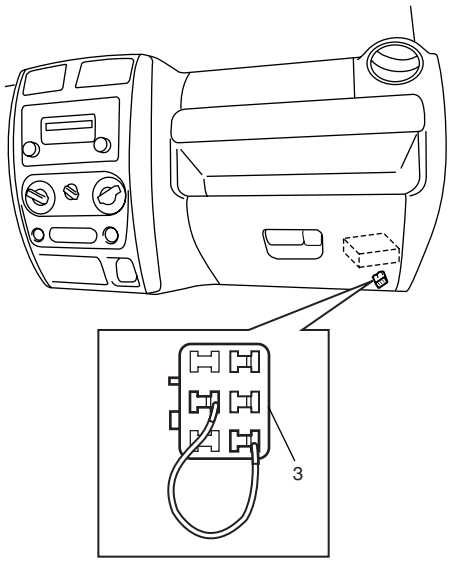

ECM diagnosis troubles which may occur in the area including the following parts when the ignition switch is ON and the engine is running, and indicates the result by turning on or flashing malfunction indicator lamp (1).

- Heated oxygen sensor (if equipped)
- ECT sensor
- TP sensor
- IAT sensor
- MAP sensor
- CMP sensor
- CKP sensor
- Knock sensor
- VSS
- CPU (Central Processing Unit) of ECM

ECM and malfunction indicator lamp (1) operate as follows.

- Malfunction indicator lamp (1) lights when the ignition switch is turned ON (but the engine at stop) with the diagnosis switch terminal ungrounded regardless of the condition of Engine and Emission Control system. This is only to check the malfunction indicator lamp (1) in the combination meter and its circuit.
- If the above areas of Engine and Emission Control system is free from any trouble after the engine start (while engine is running), malfunction indicator lamp (1) turns OFF.
- When ECM detects a trouble which has occurred in the above areas, it makes malfunction indicator lamp (1) turn ON while the engine is running to warn the driver of such occurrence of trouble and at the same time it stores the trouble area in ECM back-up memory. (The memory is kept as it is even if the trouble was only temporary and disappeared immediately. And it is not erased unless the power to ECM is shut off for specified time described in “Time Required to Erase DTC” table under the “Diagnostic Trouble Code (DTC) Clearance” in this section.)

  Also trouble area in memory can be checked either using SUZUKI scan tool (2) or reading the flashing pattern of malfunction indicator lamp using diagnosis connector (3). For further detail of the checking procedure, refer to “Diagnostic Trouble Code (DTC) Check”.

NOTE:

When a trouble occurs in the above areas and disappears soon while the diagnosis switch terminal is ungrounded and the engine is running, malfunction indicator lamp (1) lights and remains ON as long as the trouble exists but it turns OFF when the normal condition is restored.

Warm-Up Cycle

A warm-up cycle means sufficient vehicle operation such that the coolant temperature has risen by at least 22 °C (40 °F) from engine starting and reaches a minimum temperature of 70 °C (160 °F).

Driving Cycle

A “Driving Cycle” consists of engine startup, driving mode where a malfunction would be detected if present and engine shutoff.

Data Link Connector (DLC)

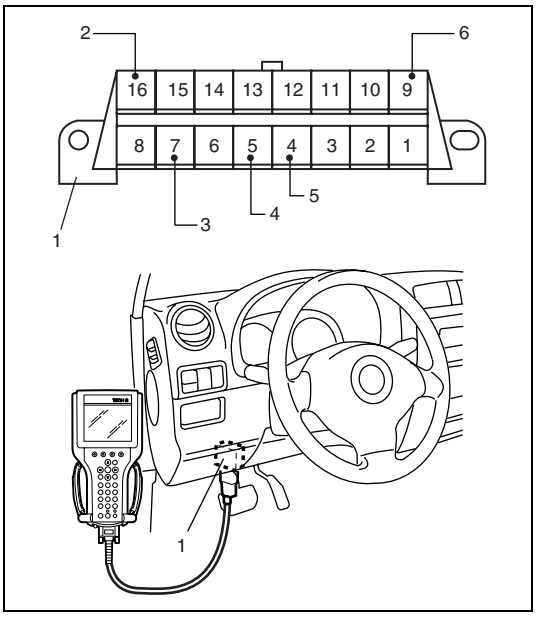

DLC (1) is in compliance with SAEJ1962 in the shape of connector and pin assignment.
Serial data line (K line of ISO 9141) (3) is used for SUZUKI scan tool to communicate with ECM, TCM, Air Bag SDM and ABS control module.
SUZUKI serial data line (6) is used for SUZUKI scan tool to communicate with immobilizer control module.

2.	B+
4.	ECM ground
5.	Body ground

Precaution in Diagnosing Trouble for Engine

- Don’t disconnect couplers from ECM, battery cable at battery, ECM ground wire harness from engine or main fuse before confirming diagnostic information (DTC etc.) stored in ECM memory. Such disconnection will erase memorized information in ECM memory.
- Diagnostic information stored in ECM memory can be cleared as well as checked by using SUZUKI scan tool. Before using scan tool, read its Operator’s (Instruction) Manual carefully to have good understanding as to what functions are available and how to use it.
- Be sure to read “Precautions for Electrical Circuit Service” in Section 0A before inspection and observe what is written there.
- ECM Replacement
  When substituting a known-good ECM, check for the following conditions. Neglecting this check may cause damage to a known-good ECM.
  – Resistance value of all relays, actuators is as specified respectively.
  – MAP sensor and TP sensor are in good condition and none of power circuits of these sensors is shorted to ground.
- ECM/immobilizer code registration after replacement ECM
  When ECM is replaced with new one or with other one, make sure that register ECM/immobilizer code to ECM correctly according to “Procedure After ECM Replacement” in Section 8G.

Engine and Emission Control System Check

Refer to the following items for the details of each step.

Step	Action	Yes	No
1	Customer Complaint Analysis 1) Perform customer complaint analysis referring to the followings. Was customer complaint analysis performed?	Go to Step 2.	Perform customer complaint analysis.
2	Diagnostic Trouble Code (DTC) Check, Record and Clearance 1) Check for DTC referring to the followings. Is there any DTC(s)?	Print DTC or write them down and clear them by referring to “Diagnostic Trouble Code (DTC) Clearance” in this section, and go to Step 3.	Go to Step 4.
3	Visual Inspection 1) Perform visual inspection referring to the followings. Is there any faulty condition?	Repair or replace malfunction part, and go to Step 11.	Go to Step 5.
4	Visual Inspection 1) Perform visual inspection referring to the followings. Is there any faulty condition?		Go to Step 8.
5	Trouble Symptom Confirmation 1) Confirm trouble symptom referring to the followings. Is trouble symptom identified?	Go to Step 6.	Go to Step 7.
6	Rechecking and Record of DTC 1) Recheck for DTC referring to “Diagnostic Trouble Code (DTC) Check” in this section. Is there any DTC(s)?	Go to Step 9.	Go to Step 8.
7	Rechecking and Record of DTC 1) Recheck for DTC referring to “Diagnostic Trouble Code (DTC) Check” in this section. Is there any DTC(s)?		Go to Step 10.
8	Engine Basic Inspection and Engine Diagnosis Table 1) Check and repair according to “Engine Basic Inspection” and “Engine Symptom Diagnosis” in this section. Are check and repair complete?	Go to Step 11.	Check and repair malfunction part(s), and go to Step 11.
9	Trouble shooting for DTC 1) Check and repair according to applicable DTC diag. flow table. Are check and repair complete?		
10	Check for Intermittent Problems 1) Check for intermittent problems referring to the followings. Is there any faulty condition?	Repair or replace malfunction part(s), and go to Step 11.	Go to Step 11.
11	Final Confirmation Test 1) Clear DTC if any. 2) Perform final confirmation test referring to the followings. Is there any problem symptom, DTC or abnormal condition?	Go to Step 6.	End.

1. CUSTOMER COMPLAINT ANALYSIS

Record details of the problem (failure, complaint) and how it occurred as described by the customer. For this purpose, use of such an inspection form will facilitate collecting information to the point required for proper analysis and diagnosis.

2. DIAGNOSTIC TROUBLE CODE (DTC) CHECK, RECORD AND CLEARANCE

First, check DTC, referring to "Diagnostic Trouble Code (DTC) check" in this section. If DTC is indicated, print it or write them down and then clear them by referring to "Diagnostic Trouble Code (DTC) Clearance" in this section. DTC indicates malfunction that occurred in the system but does not indicate whether it exists now or it occurred in the past and the normal condition has been restored now. To check which case applies, check the symptom in question according to Step 5 and recheck DTC according to Step 6 and 7.
Attempt to diagnose a trouble based on DTC in this step only or failure to clear the DTC in this step will lead to incorrect diagnosis, trouble diagnosis of a normal circuit or difficulty in troubleshooting.

NOTE:

If only Immobilizer DTCs (P1620-P1623) are indicated in this step, perform trouble diagnosis according to "Diagnostic Trouble Code Table" in Section 8G.

3. AND 4. VISUAL INSPECTION

As a preliminary step, be sure to perform visual check of the items that support proper function of the engine referring to "Visual Inspection" in this section.

5. TROUBLE SYMPTOM CONFIRMATION

Based on information obtained in Step 1 Customer complaint analysis and Step 2 DTC / freeze frame data check, confirm trouble symptoms. Also, reconfirm DTC according to "DTC Confirmation Procedure" described in each DTC Diagnosis Flow Table.

6. AND 7. RECHECKING AND RECORD OF DTC

Refer to "Diagnostic Trouble Code (DTC) Check" in this section for checking procedure.

8. ENGINE BASIC INSPECTION AND ENGINE SYMPTOM DIAGNOSIS

Perform basic engine check according to the "Engine Basic Inspection" first. When the end of the flow table has been reached, check the parts of the system suspected as a possible cause referring to "Engine Symptom Diagnosis" and based on symptoms appearing on the vehicle (symptoms obtained through steps of customer complaint analysis, trouble symptom confirmation and / or basic engine check) and repair or replace faulty parts, if any.

9. TROUBLESHOOTING FOR DTC (SEE EACH DTC DIAG. FLOW)

Based on the DTC indicated in Step 6 or 7 and referring to the applicable DTC diag. flow table in this section, locate the cause of the trouble, namely in a sensor, switch, wire harness, connector, actuator, ECM or other part and repair or replace faulty parts.

10. CHECK FOR INTERMITTENT PROBLEM

Check parts where an intermittent trouble is easy to occur (e.g., wire harness, connector, etc.), referring to "Intermittent and Poor Connection" in Section 0A and related circuit of DTC recorded in Step 2.

11. FINAL CONFIRMATION TEST

Confirm that the problem symptom has gone and the engine is free from any abnormal conditions. If what has been repaired is related to the DTC, clear the DTC once, perform DTC confirmation procedure and confirm that no DTC is indicated.

Customer Problem Inspection Form (Example)

User name:	Model:	VIN:	
Date of issue:	Date Reg.	Date of problem:	Mileage:

PROBLEM SYMPTOMS	
☐ **Difficult Starting** ☐ No cranking ☐ No initial combustion ☐ No combustion ☐ Poor starting at (☐cold ☐warm ☐always) ☐ Other_____	☐ **Poor Driveability** ☐ Hesitation on acceleration ☐ Back fire/☐After fire ☐ Lack of power ☐ Surging ☐ abnormal knocking ☐ Other_____
☐ **Poor Idling** ☐ Poor fast idle ☐ Abnormal idling speed (☐High ☐Low) (r/min.) ☐ Unstable ☐ Hunting (r/min. to r/min.) ☐ Other_____	☐ **Engine Stall when** ☐ Immediately after start ☐ Accel. pedal is depressed ☐ Accel. pedal is released ☐ Load is applied ☐ A/C ☐Electric load ☐P/S ☐ Other_____ ☐ Other_____
☐ OTHERS:	

VEHICLE/ENVIRONMENTAL CONDITION WHEN PROBLEM OCCURS	
Environmental Condition	
Weather Temperature Frequency Road	☐Fair ☐Cloudy ☐Rain ☐Snow ☐Always ☐Other_____ ☐Hot ☐Warm ☐Cool ☐Cold (°F/ °C) ☐Always ☐Always ☐Sometimes (times/ day, month) ☐Only once ☐Under certain condition ☐Urban ☐Suburb ☐Highway ☐Mountainous (☐Uphill ☐Downhill) ☐Tarmacadam ☐Gravel ☐Other_____
Vehicle Condition	
Engine condition	☐Cold ☐Warming up phase ☐Warmed up ☐Always ☐Other at starting ☐Immediately after start ☐Racing without load ☐Engine speed (r/min)
Vehicle condition	During driving: ☐Constant speed ☐Accelerating ☐Decelerating ☐Right hand corner ☐Left hand corner ☐When shifting (Lever position) ☐At stop ☐Vehicle speed when problem occurs (km/h, Mile/h) ☐Other

Malfunction indicator lamp condition	☐Always ON ☐Sometimes ON ☐Always OFF ☐Good condition	
Diagnostic trouble code	First check:	☐No code ☐Malfunction code ( )
	Second check:	☐No code ☐Malfunction code ( )

NOTE:

The above form is a standard sample. It should be modified according to conditions characteristic of each market.

Malfunction Indicator Lamp (MIL) Check

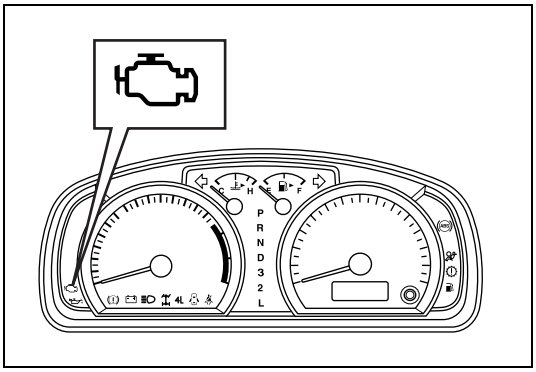

1) Turn ON ignition switch (but the engine at stop) and check that MIL lights.
   If MIL does not light up (or MIL dims) but engine can be starting, go to "Table A-1 Malfunction Indicator Lamp Circuit Check - Lamp Does Not Come "ON" at Ignition Switch ON (But Engine at Stop)" for troubleshooting.
   If MIL flushes, go to "Table A-3 Malfunction Indicator Lamp Circuit Check - MIL Flashes at Ignition Switch ON" for trouble shooting.
   If MIL does not light with ignition switch ON and engine does not start though it is cranked up, go to "Table A-5 ECM Power and Ground Circuit Check - MIL Doesn't Start Though It is Cranked UP" for troubleshooting.
2) Start engine and check that MIL turns OFF.
   If MIL remains ON and no DTC is stored in ECM, go to "Table A-2 Malfunction Indicator Lamp Circuit Check - Lamp Remains "ON" after Engine Starts" for troubleshooting.

Diagnostic Trouble Code (DTC) Check

[Using SUZUKI Scan Tool]

1) Prepare SUZUKI scan tool.

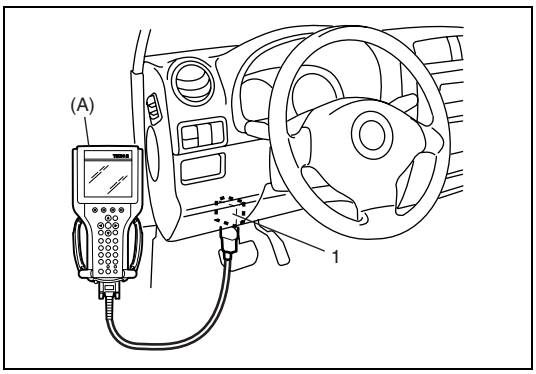

2) With ignition switch OFF, connect it to data link connector (DLC) (1) located on underside of instrument panel at driver's seat side.

   Special tool
   (A): SUZUKI scan tool

3) Turn ignition switch ON and confirm that MIL lights.
4) Read DTC according to instructions displayed on scan tool and print it or write it down.
   Refer to scan tool operator's manual for further details.
   If communication between scan tool and ECM is not possible, check if scan tool is communicable by connecting it to ECM in another vehicle. If communication is possible in this case, scan tool is in good condition. Then check data link connector and serial data line (circuit) in the vehicle with which communication was not possible.
   If connector and circuit are OK, check that power supply and ground circuits of ECM and DLC are in good condition referring to "Table A-5 ECM Power and Ground Circuit Check - MIL Doesn't Start Though It is Cranked UP".
5) After completing the check, turn ignition switch off and disconnect scan tool from data link connector.

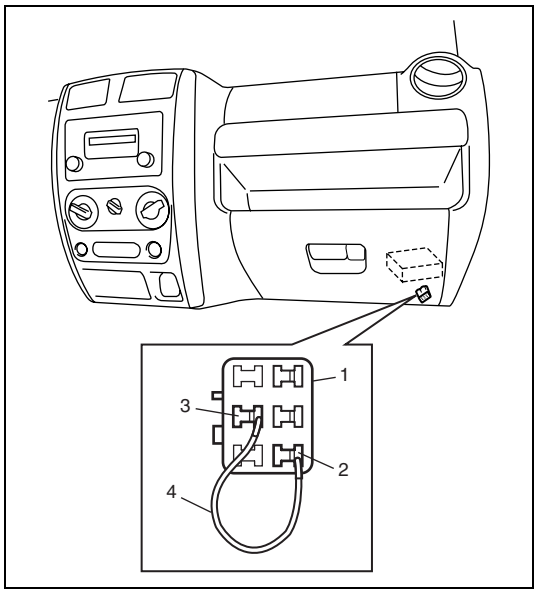

[Without Using SUZUKI Scan Tool]

1) Check malfunction indicator lamp referring to “Malfunction Indicator Lamp (MIL) Check” in this section.
2) With the ignition switch OFF position, connect diagnosis switch terminal (3) and ground terminal (2) in diagnosis connector (1) with service wire (4).
3) With the ignition switch ON position and leaving engine OFF, read DTC from flashing pattern of malfunction indicator lamp. Refer to “Diagnostic Trouble Code (DTC) Table” in this section.
   If lamp does not flash or remains ON or OFF, go to “Table A-4 Malfunction Indicator Lamp Circuit Check - MIL Does Not Flash, Just Remains ON or Just Remains OFF Even with Grounding Diagnosis Switch Terminal”.

NOTE:

- **If abnormality or malfunction lies in two or more areas, malfunction indicator lamp indicates applicable codes three times each.**
  And flashing of these codes is repeated as long as diagnosis terminal is grounded and ignition switch is held at ON position.
- **Take a note of diagnostic trouble code indicated first.**

4) After completing the check, turn the ignition switch OFF position and disconnect service wire from diagnosis connector.

Diagnostic Trouble Code (DTC) Clearance

[Using SUZUKI Scan Tool]

1) Connect SUZUKI scan tool to data link connector in the same manner as when making this connection for DTC check.
2) Turn ignition switch ON.
3) Erase DTC according to instructions displayed on scan tool. Refer to scan tool operator’s manual for further details.
4) After completing the clearance, turn ignition switch off and disconnect scan tool from data link connector.

NOTE:

DTC stored in ECM memory are also cleared in following cases. Be careful not to clear them before keeping their record.

- **When power to ECM is cut off (by disconnecting battery cable, removing fuse or disconnecting ECM connectors)**
- **When the same malfunction (DTC) is not detected again during 40 engine warm-up cycles (See "Warm-up Cycle" of "On-Board Diagnostic System Description").**

[Without Using SUZUKI Scan Tool]

1) Turn the ignition switch OFF position.
2) Disconnect battery negative cable for specified time below to erase diagnostic trouble code stored in ECM memory and reconnect it.

Time required to erase DTC

Ambient temperature	Time to cut power to ECM
Over 0 °C (32 °F)	30 sec. or longer
Under 0 °C (32 °F)	Not specifiable. Select a place with higher than 0 °C (32 °F) temperature.

Diagnostic Trouble Code (DTC) Table

DTC NO.	DETECTING ITEM	DETECTING CONDITION (DTC will set when detecting:)	MIL
P0105 (No.11)	Manifold absolute pressure circuit malfunction	Low pressure-high vacuum-low voltage (or MAP sensor circuit shorted to ground) High pressure-low vacuum-high voltage (or MAP sensor circuit open)	1 driving cycle
P0110 (No.18)	Intake air temp. circuit malfunction	Intake air temp. circuit low input Intake air temp. circuit high input	1 driving cycle
P0115 (No.19)	Engine coolant temp. circuit malfunction	Engine coolant temp. circuit low input Engine coolant temp. circuit high input	1 driving cycle
P0120 (No.13)	Throttle position circuit malfunction	Throttle position circuit low input Throttle position circuit high input	1 driving cycle
P0130 (No.14)	HO2S circuit malfunction	Min. output voltage of HO2S-higher than specification Max. output voltage of HO2S-lower than specification	1 driving cycle
P0135 (No.14)	HO2S heater circuit malfunction	Terminal voltage is lower than specification at heater OFF or it is higher at heater ON.	1 driving cycle
P0325 (No.17)	Knock sensor circuit malfunction	Knock sensor circuit low input Knock sensor circuit high input	1 driving cycle
P0335 (No.23)	Crankshaft position sensor circuit malfunction	No signal for 2 sec. During engine cranking	1 driving cycle
P0340 (No.15)	Camshaft position sensor circuit malfunction	No signal during engine running	1 driving cycle
P0500 (No.16)	Vehicle speed sensor malfunction	No signal while running in “D” range or during fuel cut at decelerating	1 driving cycle
P1570 (No.21)	ABS signal circuit malfunction	ABS signal ON (low voltage) when engine start	1 driving cycle

DTC NO.	DETECTING ITEM	DETECTING CONDITION (DTC will set when detecting:)	MIL
P1620 (No.84)	ECU code not registered	Refer to “Diagnostic Trouble Code” in Section 8G.	
P1621 (No.83)	No ECU code transmitted from Immobilizer Control Module		
P1622 (No.82)	Faulty in ECM		
P1623 (No.81)	ECU code not matched		

NOTE:

- **For ( ) marked No. in DTC column, it is used for DTC checking without using SUZUKI scan tool.**
- **DTC No.12 appears when none of the other codes is identified (DTC checking without using SUZUKI scan tool).**

Example of Malfunction Indicator Lamp (MIL) Flashing Pattern

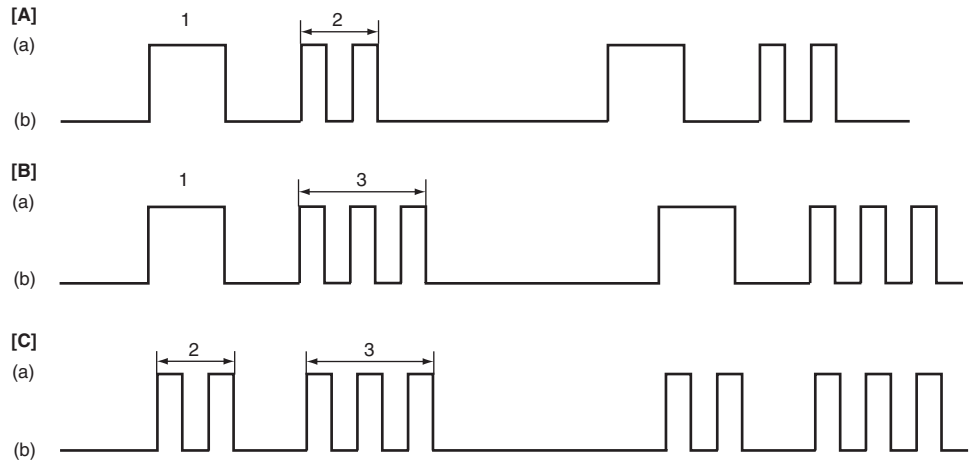

[A]: Normal (No DTC is detected)	(a): MIL ON
[B]: DTC P0120 (DTC No.13)	(b): MIL OFF
[C]: DTC P0335 (DTC No.23)	

Fail-Safe Table

When any of the following DTCs is detected, ECM enters fail-safe mode as long as malfunction continues to exist but that mode is canceled when ECM detects normal condition after that.

DTC NO.	DETECTED ITEM	FAIL-SAFE OPERATION (SYMPTOM)
P0105 (No.11)	Manifold absolute pressure sensor circuit malfunction	ECM uses value determined by throttle opening and engine speed.
P0110 (No.18)	Intake air temp. sensor circuit malfunction	ECM controls actuators assuming that intake air temperature is 20 °C (68 °F).
P0115 (No.19)	Engine coolant temp. sensor circuit malfunction	ECM controls actuators assuming that engine coolant temperature is 80 °C (176 °F).
P0120 (No.13)	Throttle position sensor circuit malfunction	ECM controls actuators assuming that throttle opening is 20°. (High idle speed)
P0335 (No.23)	Crankshaft position sensor circuit malfunction	ECM controls injection system sequential injection to synchronous injection. (Cranking for a few seconds to start engine)
P0340 (No.15)	Camshaft position sensor circuit malfunction	ECM controls injection system sequential injection to synchronous injection. (Cranking for a few seconds to start engine)
P0500 (No.16)	Vehicle speed sensor malfunction	ECM stops idle air control.
P1570 (No.21)	ABS signal circuit malfunction	ECM controls actuators assuming that ABS signal is OFF.

Visual Inspection

Visually check following parts and systems.

INSPECTION ITEM	REFERRING SECTION
• Engine oil – level, leakage	"Engine Oil and Filter" in Section 0B
• Engine coolant – level, leakage	"Engine Coolant" in Section 0B
• Fuel – level, leakage	"Fuel System" in Section 0B
• A/T fluid – level, leakage	"Automatic Transmission Fluid" in Section 0B
• Air cleaner element – dirt, clogging	"Air Cleaner Filter" in Section 0B
• Battery – fluid level, corrosion of terminal	
• Water pump belt – tension, damage	"Driver Belt" in Section 0B
• Throttle cable – play, installation	"Accelerator Cable Adjustment" in Section 6E
• Vacuum hoses of air intake system – disconnection, looseness, deterioration, bend	"Evaporative emission (EVAP) Control System" in Section 6E
• Connectors of electric wire harness – disconnection, friction	
• Fuses – burning	
• Parts – installation, bolt – looseness	
• Parts – deformation	
• Other parts that can be checked visually	
Also check following items at engine start, if possible	
• Malfunction indicator lamp – operation	"Malfunction Indicator Lamp (MIL) Check" in this section
• Charge warning lamp – operation	"Faulty Indicator Lamp Operation" under "Generator" in Section 6H
• Engine oil pressure warning lamp – operation	"Oil Pressure Light" in Section 8 ("Oil Pressure Check" in Section 6A1)
• Engine coolant temp. meter – operation	"Engine Coolant Temp. (ECT) Meter and ECT Sensor" in Section 8
• Fuel level meter – operation	"Fuel Meter and Fuel Gauge Unit" in Section 8
• Tachometer – operation	"Tachometer and ECM" in Section 8
• Abnormal air being inhaled from air intake system	
• Exhaust system – leakage of exhaust gas, noise	
• Other parts that can be checked visually	

Engine Basic Inspection

This check is very important for troubleshooting when ECM has detected no DTC and no abnormality has been found in visual inspection.
Follow the flow table carefully.

Step	Action	Yes	No
1	Was “Engine and Emission Control System Check” performed?	Go to Step 2.	Go to “Engine and Emission Control System Check”.
2	Check battery voltage. Is it 11 V or more?	Go to Step 3.	Charge or replace battery.
3	Is engine cranked?	Go to Step 4.	Go to “Diagnosis Table” in Section 6G.
4	Does engine start?	Go to Step 5.	Go to Step 9.
5	Check idle speed as follows: 1) Warm up engine to normal operating temp. 2) Shift transmission to neutral position for M/T (“P” position for A/T). 3) All of electrical loads are switched off. 4) Check engine idle speed with scan tool. See Fig. 1. Is it 650 – 750 r/min (700 – 800 r/min. for A/T vehicle)?	Go to Step 6.	Go to “Engine Symptom Diagnosis”.
6	Is SUZUKI scan tool available?	Go to Step 8.	Go to Step 7.
7	Check ignition timing as follows: 1) Connect test switch terminal (2) of monitor coupler (1) to ground. See Fig. 2. 2) Using timing light (1), check initial ignition timing. See Fig. 4. Is it 5° ± 3° BTDC at specified idle speed?	Go to “Engine Symptom Diagnosis”.	Check ignition control related parts referring to “Ignition Timing” in Section 6F.
8	Check ignition timing as follows: 1) Select “MISC” mode on SUZUKI scan tool and fix ignition timing to initial one. See Fig. 3. 2) Using timing light (1), check initial ignition timing. See Fig. 4. Is it 5° ± 3° BTDC at specified idle speed?	Go to “Engine Symptom Diagnosis”.	Check ignition control related parts referring to “Ignition Timing” in Section 6F.
9	Check immobilizer system malfunction as follows (if equipped): 1) Check MIL (malfunction indicator lamp) for flashing. Is it flashing when ignition switch is turned to ON position?	Go to “Diagnostic Trouble Code (DTC) Check” in Section 8G.	Go to Step 10.

Step	Action	Yes	No
10	Check fuel supply as follows: 1) Check to make sure that enough fuel is filled in fuel tank. 2) Turn ON ignition switch for 2 seconds and then OFF. See Fig. 5. Is fuel return pressure (returning sounds) felt from fuel feed hose (1) when ignition switch is turned ON?	Go to Step 12.	Go to Step 11.
11	Check fuel pump for operating. 1) Was fuel pump operating sound heard from fuel filler for about 2 seconds after ignition switch ON and stop?	Go to “Table B-3 Fuel Pressure Check”.	Go to “Table B-2 Fuel Pump and Its Circuit Check”.
12	Check ignition spark as follows: 1) Disconnect injector couplers. 2) Remove spark plugs and connect them to high tension cords or ignition coil assemblies. 3) Ground spark plugs. 4) Crank engine and check if each spark plug sparks. Is it in good condition?	Go to Step 13.	Go to “Ignition Spark Test” in Section 6F.
13	Check fuel injector for operation as follows: 1) Install spark plugs and connect injector connectors. 2) Using sound scope (2), check operating sound of each injector (3) when cranking engine. See Fig. 6. Was injector operating sound heard from all injectors?	Go to “Engine Symptom Diagnosis”.	Go to “Table B-1 Fuel Injector Circuit Check”.

[A] Fig. 1 for Step 5 / [B] Fig. 2 for Step 7 / [C] Fig. 3 for Step 8

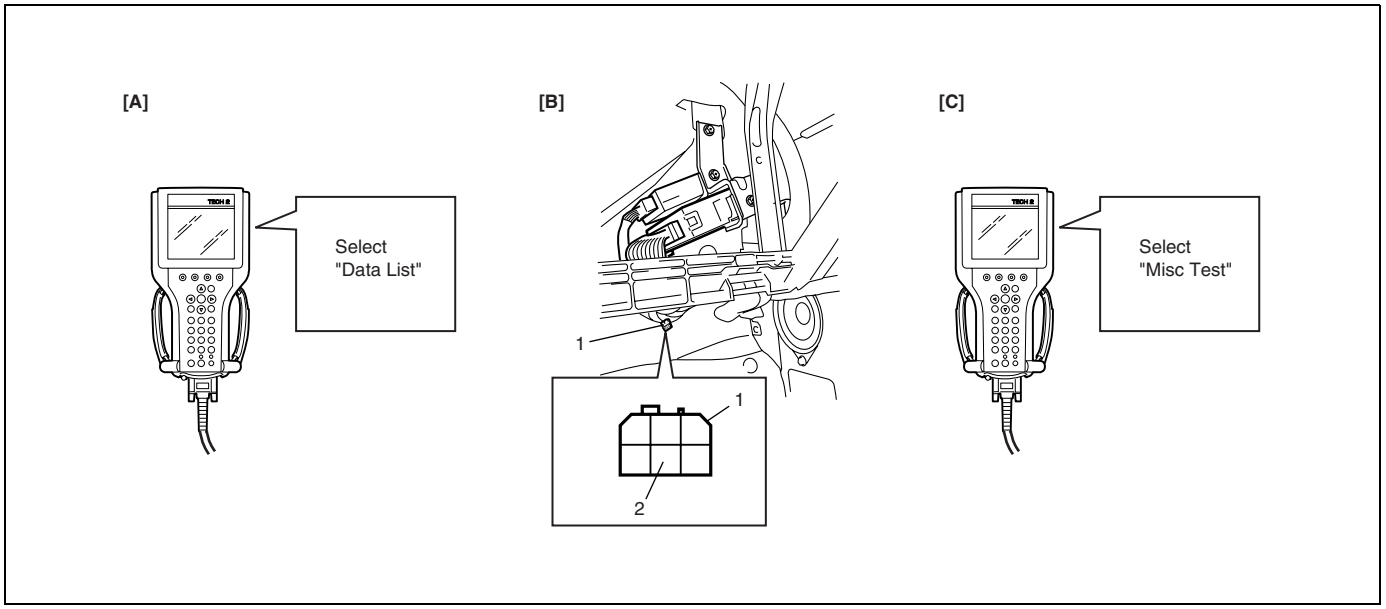

[B]: When not using SUZUKI scan tool
[C]: When using SUZUKI scan tool

[D] Fig. 4 for Step 7 or 8 / [E] Fig. 5 for Step 10 / [F] Fig. 6 for Step 13

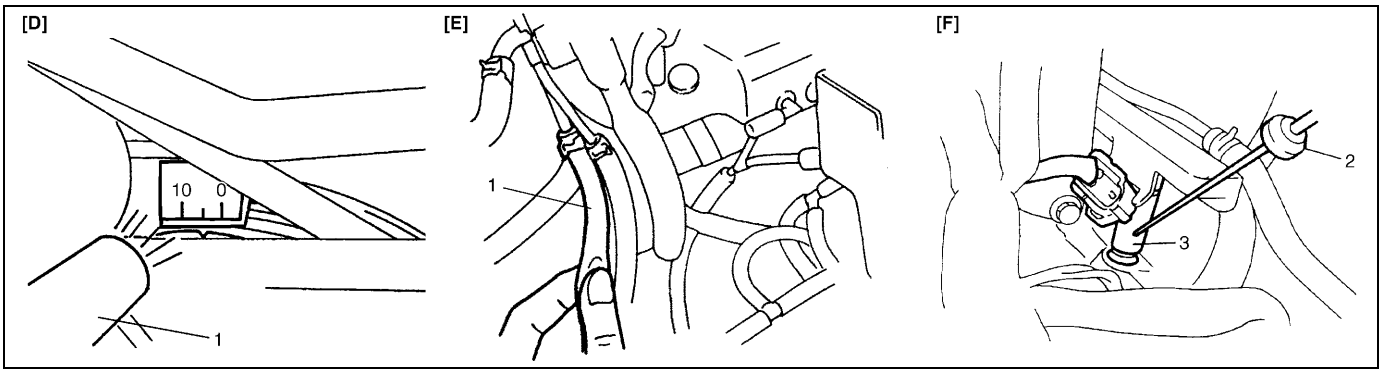

Engine Symptom Diagnosis

Perform troubleshooting referring to following table when ECM has detected no DTC and no abnormality has been found in visual inspection and engine basic inspection previously.

Condition	Possible Cause	Reference Item
Hard Starting (Engine cranks OK)	• Faulty ignition coil	"Ignition Coil Assembly (Including Ignitor)" in Section 6F.
	• Faulty CMP sensing rotor or CKP sensing rotor	"Camshaft Position Sensor" or "Crankshaft Position Sensor" in Section 6E.
	• Faulty idle air control system	"Table B-4 Idle Air Control System Check" in this section.
	• Faulty ECT sensor, TP sensor, CKP sensor, CMP sensor or MAP sensor	"Engine Coolant Temperature Sensor (ECT Sensor)", "Throttle Position Sensor (TP Sensor)", "Crankshaft Position Sensor", "Camshaft Position Sensor" or "Manifold Absolute Pressure Sensor (MAP Sensor)" in Section 6E.
	• Fuel pressure out of specification	"Table B-3 Fuel Pressure Check" in this section.
	• Faulty fuel injector	"Table B-1 Fuel Injector Circuit Check" in this section.
	• Faulty ECM	"Inspection of ECM and Its Circuits" in this section.
	• Malfunctioning PCV system	"PCV System" in Section 6E.
	• Low compression	"Compression Check" in Section 6A1.
	• Improper valve lash	"Valve Lash (Clearance)" in Section 6A1.
	• Improper valve timing	"Timing Chain and Chain Tensioner" in Section 6A1.
	• Compression leak from valve seat	"Valves and Cylinder Head" in Section 6A1.
	• Sticky valve stem	"Valves and Cylinder Head" in Section 6A1.
	• Weak or damaged valve springs	"Valves and Cylinder Head" in Section 6A1.
	• Compression leak at cylinder head gasket	"Valves and Cylinder Head" in Section 6A1.
	• Sticking or damaged piston ring	"Pistons, Piston Rings, Connecting Rods and Cylinders" in Section 6A1.
	• Worn piston, ring or cylinder	"Pistons, Piston Rings, Connecting Rods and Cylinders" in Section 6A1.

Condition	Possible Cause	Reference Item
Engine has no power	• Engine overheating	Refer to “Overheating” of this table.
	• Faulty ignition coil	“Ignition Coil Assembly (Including Ignitor)” in Section 6F.
	• Faulty knock sensor	“DTC P0325 (DTC No.17) Knock Sensor Circuit Malfunction” in this section.
	• Fuel pressure out of specification	“Table B-3 Fuel Pressure Check” in this section.
	• Faulty injector	“Table B-1 Fuel Injector Circuit Check” in this section.
	• Faulty TP sensor, ECT sensor or MAP sensor	“Throttle Position Sensor (TP Sensor)”, “Engine Coolant Temperature Sensor (ECT Sensor)” or “Manifold Absolute Pressure Sensor (MAP Sensor)” in Section 6E.
	• Faulty ECM	“Inspection of ECM and Its Circuits” in this section.
	• Malfunctioning EGR valve (if equipped)	“EGR System (If Equipped)” in Section 6E.
	• Maladjusted accelerator cable play	“Accelerator Cable Adjustment” in Section 6E.
	• Low compression	“Compression Check” in Section 6A1.
	• Dragging brakes	“Diagnosis Table” in Section 5.
	• Slipping clutch	“Diagnosis” in Section 7C.
Improper engine idling or engine fails to idle	• Faulty ignition coil	“Ignition Coil Assembly (Including Ignitor)” in Section 6F.
	• Engine overheating	Refer to “Overheating” of this table.
	• Fuel pressure out of specification	“Table B-3 Fuel Pressure Check” in this section.
	• Faulty idle air control system	“Table B-4 Idle Air Control System Check” in this section.
	• Faulty evaporative emission control system	“Evaporative Emission (EVAP) Control System” in Section 6E.
	• Faulty injector	“Table B-1 Fuel Injector Circuit Check” in this section.
	• Faulty ECT sensor, TP sensor or MAP sensor	“Throttle Position Sensor (TP Sensor)”, “Engine Coolant Temperature Sensor (ECT Sensor)” or “Manifold Absolute Pressure Sensor (MAP Sensor)” in Section 6E.
	• Malfunctioning PCV system	“PCV System” in Section 6E.
	• Faulty ECM	“Inspection of ECM and Its Circuits” in this section.
	• Faulty EGR system (if equipped)	“EGR System (If Equipped)” in Section 6E.
	• Low compression	“Compression Check” in Section 6A1.

Condition	Possible Cause	Reference Item
Engine hesitates (Momentary lack of response as the accelerator is depressed. Can occur at all vehicle speeds. Usually most severe when first trying to make the vehicle move, as from a stop sign.)	• Faulty ignition coil	"Ignition Coil Assembly (Including Ignitor)" in Section 6F.
	• Engine overheating	Refer to "Overheating" of this table.
	• Fuel pressure out of specification	"Table B-3 Fuel Pressure Check" in this section.
	• Faulty injector	"Table B-1 Fuel Injector Circuit Check" in this section.
	• Faulty TP sensor, ECT sensor or MAP sensor	"Throttle Position Sensor (TP Sensor)", "Engine Coolant Temperature Sensor (ECT Sensor)" or "Manifold Absolute Pressure Sensor (MAP Sensor)" in Section 6E.
	• Faulty ECM	"Inspection of ECM and Its Circuits" in this section.
	• Malfunctioning EGR valve (if equipped)	"EGR System (If Equipped)" in Section 6E.
	• Low compression	"Compression Check" in Section 6A1.
Surges (Engine power variation under steady throttle or cruise. Feels like the vehicle speeds up and down with no change in the accelerator pedal.)	• Faulty ignition coil or high-tension cord	"Ignition Coil Assembly (Including Ignitor)" or "High-Tension Cords" in Section 6F.
	• Variable fuel pressure	"Table B-3 Fuel Pressure Check" in this section.
	• Faulty MAP sensor	"Manifold Absolute Pressure Sensor (MAP Sensor)" in Section 6E.
	• Faulty injector	"Table B-1 Fuel Injector Circuit Check" in this section.
	• Faulty ECM	"Inspection of ECM and Its Circuits" in this section.
	• Malfunctioning EGR valve (if equipped)	"EGR System (If Equipped)" in Section 6E.
Excessive detonation (The engine makes sharp metallic knocks that change with throttle opening. Sounds like pop corn popping.)	• Engine overheating	Refer to "Overheating" of this table.
	• Faulty spark plug	"Spark Plugs" in Section 6F.
	• Clogged fuel filter and fuel lines	"Table B-3 Fuel Pressure Check" in this section.
	• Malfunctioning EGR valve (if equipped)	"EGR System (If Equipped)" in Section 6E.
	• Poor performance of knock sensor, ECT sensor or MAP sensor	"DTC P0325 (DTC No.17) Knock Sensor Circuit Malfunction" in this section, "Engine Coolant Temperature Sensor (ECT Sensor)" or "Manifold Absolute Pressure Sensor (MAP Sensor)" in Section 6E.
	• Faulty injector	"Table B-1 Fuel Injector Circuit Check" in this section.
	• Faulty ECM	"Inspection of ECM and Its Circuits" in this section.
	• Excessive combustion chamber deposits	"Valves and Cylinder Head" in Section 6A1.

Condition	Possible Cause	Reference Item
Overheating	• Inoperative thermostat	"Thermostat" in Section 6B.
	• Faulty A/C condenser fan motor or its circuit	"Table B-7 A/C Condenser Fan Control System Check" in this section.
	• Faulty radiator cooling fun clutch	"Water Pump Belt and Cooling Fan" in Section 6B.
	• Loose or slip water pump belt	"Water Pump Belt Tension" in Section 6B.
	• Poor water pump performance	"Water Pump" in Section 6B.
	• Clogged or leaky radiator	"Radiator" in Section 6B.
	• Improper engine oil grade	"Engine Oil and Filter" in Section 0B.
	• Clogged oil filter or oil strainer	"Oil Pressure Check" in Section 6A1.
	• Poor oil pump performance	"Oil Pressure Check" in Section 6A1.
	• Dragging brakes	"Diagnosis Table" in Section 5.
	• Slipping clutch	"Diagnosis" in Section 7C.
	• Blown cylinder head gasket	"Valves and Cylinder Head" in Section 6A1.
Poor gasoline mileage	• Faulty ignition coil	"Ignition Coil Assembly (Including Ignitor)" in Section 6F.
	• Fuel pressure out of specification	"Table B-3 Fuel Pressure Check" in this section.
	• Faulty TP sensor, ECT sensor or MAP sensor	"Throttle Position Sensor (TP Sensor)", "Engine Coolant Temperature Sensor (ECT Sensor)" or "Manifold Absolute Pressure Sensor (MAP Sensor)" in Section 6E.
	• Faulty injector	"Table B-1 Fuel Injector Circuit Check" in this section.
	• Faulty ECM	"Inspection of ECM and Its Circuits" in this section.
	• Malfunctioning EGR valve (if equipped)	"EGR System (If Equipped)" in Section 6E.
	• High idle speed	Refer to "Improper Engine Idling or Engine Fails to Idle" of this table.
	• Low compression	"Compression Check" in Section 6A1.
	• Poor valve seating	"Valves and Cylinder Head" in Section 6A1.
	• Dragging brakes	"Diagnosis Table" in Section 5.
	• Slipping clutch	"Diagnosis" in Section 7C.
	• Thermostat out of order	"Thermostat" in Section 6B.
	• Improper tire pressure	"Replacement Tires" in Section 3F.
Excessive engine oil consumption	• Sticky piston ring	"Pistons, Piston Rings, Connecting Rods and Cylinders" in Section 6A1.
	• Worn piston and cylinder	"Pistons, Piston Rings, Connecting Rods and Cylinders" in Section 6A1.
	• Worn piston ring groove and ring	"Pistons, Piston Rings, Connecting Rods and Cylinders" in Section 6A1.
	• Improper location of piston ring gap	"Pistons, Piston Rings, Connecting Rods and Cylinders" in Section 6A1.
	• Worn or damaged valve stem seal	"Valves and Cylinder Head" in Section 6A1.
	• Worn valve stem	"Valves and Cylinder Head" in Section 6A1.

Condition	Possible Cause	Reference Item
Low oil pressure	• Improper oil viscosity	"Engine Oil and Filter" in Section 0B.
	• Malfunctioning oil pressure switch	"Oil Pressure Switch" in Section 8.
	• Clogged oil strainer	"Oil Pan and Oil Pump Strainer" in Section 6A1.
	• Functional deterioration of oil pump	"Oil Pump" in Section 6A1.
	• Worn oil pump relief valve	"Oil Pump" in Section 6A1.
	• Excessive clearance in various sliding parts	
Engine noise See NOTE below.	• Improper valve lash	"Valve Lash (Clearance)" in Section 6A1.
	• Worn valve stem and guide	"Valves and Cylinder Head" in Section 6A1.
	• Weak or broken valve spring	"Valves and Cylinder Head" in Section 6A1.
	• Warped or bent valve	"Valves and Cylinder Head" in Section 6A1.
	• Loose camshaft housing bolts	"Camshaft, Tappet and Shim" in Section 6A1.
	• Worn piston, ring and cylinder bore	"Pistons, Piston Rings, Connecting Rods and Cylinders" in Section 6A1.
	• Worn crankpin bearing	"Pistons, Piston Rings, Connecting Rods and Cylinders" in Section 6A1.
	• Worn crankpin	"Pistons, Piston Rings, Connecting Rods and Cylinders" in Section 6A1.
	• Loose connecting rod nuts	"Pistons, Piston Rings, Connecting Rods and Cylinders" in Section 6A1.
	• Low oil pressure	Refer to "Low Oil Pressure" of this table.
	• Worn crankshaft journal bearing	"Main bearings, Crankshaft and Cylinder Block" in Section 6A1.
	• Worn crankshaft journal	"Main bearings, Crankshaft and Cylinder Block" in Section 6A1.
	• Loose lower crankcase (bearing cap) bolts	"Main bearings, Crankshaft and Cylinder Block" in Section 6A1.
	• Excessive crankshaft thrust play	"Main bearings, Crankshaft and Cylinder Block" in Section 6A1.

NOTE:

Before checking the mechanical noise, make sure that:

- **Ignition timing is properly adjusted.**
- **Specified spark plug is used.**
- **Specified fuel is used.**

Condition	Possible Cause	Reference Item
Excessive hydrocarbon (HC) emission or Excessive carbon monoxide (CO) emission	• Faulty ignition coil	"Ignition Coil Assembly (Including Ignitor)" in Section 6F.
	• Fuel pressure out of specification	"Table B-3 Fuel Pressure Check" in this section.
	• Lead contamination of three way catalytic converter	"Maintenance" in Section 6K.
	• Malfunctioning PCV system	"PCV System" in Section 6E.
	• Faulty EVAP control system	"Evaporative Emission (EVAP) Control System" in Section 6E.
	• Closed loop system (A/F feed back compensation) fails – Faulty TP sensor – Faulty ECT sensor or MAP sensor – Faulty oxygen sensor	 "Throttle Position Sensor (TP Sensor)" in Section 6E. "Engine Coolant Temperature Sensor (ECT Sensor)" or "Manifold Absolute Pressure Sensor (MAP Sensor)" in Section 6E. Step 3 of "DTC P0130 (DTC No.14) Heated Oxygen Sensor (HO2S) Circuit Malfunction" in this section.
	• Faulty injector	"Table B-1 Fuel Injector Circuit Check" in this section.
	• Faulty ECM	"Inspection of ECM and Its Circuits" in this section.
	• Low compression	"Compression Check" in Section 6A1.
Excessive nitrogen oxides (NOx) emission	• Fuel pressure out of specification	"Table B-3 Fuel Pressure Check" in this section.
	• Lead contamination of three way catalytic converter	"Maintenance" in Section 6K.
	• Closed loop system (A/F feed back compensation) fails – Faulty TP sensor – Faulty ECT sensor or MAP sensor – Faulty oxygen sensor	 "Throttle Position Sensor (TP Sensor)" in Section 6E. "Engine Coolant Temperature Sensor (ECT Sensor)" or "Manifold Absolute Pressure Sensor (MAP Sensor)" in Section 6E. Step 3 of "DTC P0130 (DTC No.14) Heated Oxygen Sensor (HO2S) Circuit Malfunction" in this section.
	• Faulty injector	"Table B-1 Fuel Injector Circuit Check" in this section.
	• Faulty ECM	"Inspection of ECM and Its Circuits" in this section.
	• Faulty EGR system (if equipped)	"EGR System (If Equipped)" in Section 6E.

Scan Tool Data

As the data values given below are standard values estimated on the basis of values obtained from the normally operating vehicles by using a scan tool, use them as reference values. Even when the vehicle is in good condition, there may be cases where the checked value does not fall within each specified data range. Therefore, judgment as abnormal should not be made by checking with these data alone.
Also, conditions in the below table that can be checked by the scan tool are those detected by ECM and output from ECM as commands and there may be cases where the engine or actuator is not operating (in the condition) as indicated by the scan tool. Be sure to use the timing light to check the ignition timing.

NOTE:

When checking the data with the engine running at idle or racing, be sure to shift M/T gear to the neutral gear position and A/T gear to the "Park" position and pull the parking brake fully. Also, if nothing or "no load" is indicated, turn OFF A/C, all electric loads, P/S and all the other necessary switches.

SCAN TOOL DATA	CONDITION		REFERENCE VALUES	
FUEL SYSTEM B1 (FUEL SYSTEM STATUS)	At specified idle speed after warming up		CLOSED (closed loop)	
CALC LOAD (CALCULATED LOAD VALUE)	At specified idle speed with no load after warming up		3 – 9%	
	At 2500 r/min with no load after warming up		12 – 17%	
COOLANT TEMP. (ENGINE COOLANT TEMP.)	At specified idle speed after warming up		80 – 100 °C, 176 – 212 °F	
SHORT FT B1 (SHORT TERM FUEL TRIM)	At specified idle speed after warming up		–20 – +20%	
LONG FT B1 (LONG TERM FUEL TRIM)	At specified idle speed after warming up		–15 – +15%	
MAP (INTAKE MANIFOLD ABSOLUTE PRESSURE)	At specified idle speed with no load after		30 – 37 kPa, 220 – 340 mmHg	
ENGINE SPEED	At idling with no load after warming up		Desired idle speed ±50 r/min	
VEHICLE SPEED	At stop		0 km/h, 0 MPH	
IGNITION ADVANCE (IGNITION TIMING ADVANCE FOR NO.1 CYLINDER)	At specified idle speed with no load after warming up		5 – 16° BTDC	
INTAKE AIR TEMP.	At specified idle speed after warming up		Ambient temp.: +15 °C (59 °F) –5 °C (23 °F)	
THROTTLE POSITION (THROTTLE POSITION)	Ignition switch ON / engine stopped	Throttle valve fully closed	7 – 18%	
		Throttle valve fully open	70 – 90%	
O2S B1 S1 (HEATED OXYGEN SENSOR-1)	At specified idle speed after warming up		0.01 – 0.95 V	
PSP SW	No load to power steering.		OFF	
DESIRED IDLE (DESIRED IDLE SPEED)	At idling with no load after warming up, M/T at neutral, A/T at "P" range		M/T	700 r/min
			A/T	750 r/min

SCAN TOOL DATA	CONDITION		REFERENCE VALUES
TP SENSOR VOLT (THROTTLE POSITION SENSOR OUTPUT VOLTAGE)	Ignition switch ON / engine stopped	Throttle valve fully closed	More than 0.2 V
		Throttle valve fully open	Less than 4.8 V
INJ PULSE WIDTH (FUEL INJECTION PULSE WIDTH)	At specified idle speed with no load after warming up		2.0 – 3.6 msec.
	At 2500 r/min with no load after warming up		2.0 – 3.6 msec.
IAC FLOW DUTY (IDLE AIR CONTROL FLOW DUTY)	At idling with no load after warming up		5 – 25%
TOTAL FUEL TRIM B1	At specified idle speed after warming up		– 35 – +35%
BATTERY VOLTAGE	Ignition switch ON / engine stop		12 – 15 V
CANIST PRG DUTY (EVAP CANISTER PURGE FLOW DUTY)	–		0 – 100%
CLOSED THROTTLE POS (CLOSED THROTTLE POSITION)	Throttle valve at idle position		ON
	Throttle valve opens larger than idle position		OFF
FUEL CUT	When engine is at fuel cut condition		ON
	Other than fuel cut condition		OFF
A/C COND FAN	Engine running	A/C not operating	OFF
		A/C operating	ON
ELECTRIC LOAD	Ignition switch ON / Headlight, small light and rear window defogger all turned OFF		OFF
	Ignition switch ON / Headlight, small light or rear window defogger turned ON		ON
A/C SWITCH	Engine running after warming up, A/C not operating		OFF
	Engine running after warming up, A/C operating		ON
PNP SIGNAL (PARK / NEUTRAL POSITION SIGNAL) A/T only	Ignition switch ON	Selector lever in “P” or “N” position	P/N Range
		Selector lever in “R”, “D”, “3”, “2” or “L” position	D Range
STEP EGR FLOW DUTY	At specified idle speed after warming up		0%
BAROMETRIC PRES	–		Display the barometric pressure
FUEL PUMP	Within 3 seconds after ignition switch ON or engine running		ON
	Engine stop at ignition switch ON.		OFF
BRAKE SWITCH	Ignition switch ON	Brake pedal is depressing	ON
		Brake pedal is releasing	OFF
BLOWER FAN	Ignition switch ON	Blower fan switch 3rd speed position or more	ON
		Blower fan switch under 2nd speed position	OFF
A/C MAG CLUTCH	Engine running	A/C operating	ON
		A/C not operating	OFF

Scan Tool Data Definitions

FUEL SYSTEM B1 (FUEL SYSTEM STATUS)
Air / fuel ratio feedback loop status displayed as either open or closed loop. Open indicates that ECM ignores feedback from the exhaust oxygen sensor.
Closed indicates final injection duration is corrected for oxygen sensor feedback.

CALC LOAD (CALCULATED LOAD VALUE,%)
Engine load displayed as a percentage of maximum possible load. Value is calculated mathematically using the formula: actual (current) intake air volume ÷ maximum possible intake air volume x 100%.

COOLANT TEMP (ENGINE COOLANT TEMPERATURE, °C, °F)
It is detected by engine coolant temp. sensor.

SHORT FT B1 (SHORT TERM FUEL TRIM,%)
Short term fuel trim value represents short term corrections to the air / fuel mixture computation. A value of 0 indicates no correction, a value greater than 0 means an enrichment correction, and a value less than 0 implies an enleanment correction.

LONG FT B1 (LONG TERM FUEL TRIM,%)
Long term fuel trim Value represents long term corrections to the air / fuel mixture computation. A value of 0 indicates no correction, a value greater than 0 means an enrichment correction, and a value less than 0 implies an enleanment correction.

MAP (INTAKE MANIFOLD ABSOLUTE PRESSURE, kPa, in.Hg)
It is detected by manifold absolute pressure sensor and used (among other things) to compute engine load.

ENGINE SPEED (rpm)
It is computed by reference pulses from crankshaft position sensor.

VEHICLE SPEED (km/h, mph)
It is computed based on pulse signals from vehicle speed sensor.

IGNITION ADVANCE (IGNITION TIMING ADVANCE FOR NO.1 CYLINDER, °)
Ignition timing of NO.1 cylinder is commanded by ECM. The actual ignition timing should be checked by using the timing light.

INTAKE AIR TEMP (°C, °F)
It is detected by intake air temp. sensor and used to determine the amount of air passing into the intake manifold as air density varies with temperature.

THROTTLE POSITION (ABSOLUTE THROTTLE POSITION,%)
When throttle position sensor is fully closed position, throttle opening is indicated as 0% and 100% full open position.

O2S B1 S1 (HEATED OXYGEN SENSOR-1, V)
It indicates output voltage of HO2S installed on exhaust manifold (pre-catalyst).

DESIRED IDLE (DESIRED IDLE SPEED, rpm)
The Desired Idle Speed is an ECM internal parameter which indicates the ECM requested idle. If the engine is not running, this number is not valid.

TP SENSOR VOLT (THROTTLE POSITION SENSOR OUTPUT VOLTAGE, V)
The Throttle Position Sensor reading provides throttle valve opening information in the form of voltage.

INJ PULSE WIDTH (FUEL INJECTION PULSE WIDTH, msec.)
This parameter indicates time of the injector drive (valve opening) pulse which is output from ECM (but injector drive time of NO.1 cylinder for multiport fuel injection).

IAC FLOW DUTY (IDLE AIR (SPEED) CONTROL DUTY,%)
This parameter indicates current flow time rate within a certain set cycle of IAC valve (valve opening rate) which controls the amount of bypass air (idle speed).

TOTAL FUEL TRIM (%)
The value of Total Fuel Trim is obtained by putting values of Short Term Fuel Trim and Long Term Fuel Trim together. This value indicates how much correction is necessary to keep the air / fuel mixture stoichiometrical.

BATTERY VOLTAGE (V)
This parameter indicates battery positive voltage inputted from main relay to ECM.

CANIST PRG DUTY (EVAP CANISTER PURGE FLOW DUTY,%)
This parameter indicates valve ON (valve open) time rate within a certain set cycle of EVAP purge solenoid valve which controls the amount of EVAP purge.
0% means that the purge valve is completely closed while 100% is a fully open valve.

CLOSED THROTTLE POS (CLOSED THROTTLE POSITION, ON / OFF)
This parameter will read ON when throttle valve is fully closed, or OFF when the throttle is not fully closed.

FUEL CUT (ON / OFF)
ON: Fuel being cut (output signal to injector is stopped)
OFF: Fuel not being cut

A/C COND FAN (A/C CONDENSER FAN RELAY, ON / OFF)
ON: Command for condenser fan relay operation being output.
OFF: Command for condenser fan relay operation not being output.

ELECTRIC LOAD (ON / OFF)
ON: Headlight, small light or rear window defogger ON signal inputted.
OFF: Above electric loads all turned OFF.

A/C SWITCH (ON / OFF)
ON: Command for A/C operation being output from ECM to A/C amplifier.
OFF: Command for A/C operation not being output.

PNP SIGNAL (PARK / NEUTRAL POSITION SIGNAL, P/N RANGE or D RANGE)
It is detected by signal from TCM.
D range: A/T is in “R”, “D”, “3”, “2” or “L” range.
P/N range: A/T is in “P” or “N” range or the above signal is not inputted from TCM.

STEP EGR FLOW DUTY (%)
This parameter indicates opening rate of EGR valve which controls the amount of EGR flow.

PSP SWITCH (ON / OFF)
The Power Steering Pressure switch parameter displays ON when steering wheel is turned all the way to the right or left.

BAROMETRIC PRESS (kPa, in.Hg)
This parameter represents a measurement of barometric air pressure and is used for altitude correction of the fuel injection quantity and IAC valve control.

FUEL PUMP (ON / OFF)
ON is displayed when the ECM activates the fuel pump via the fuel pump relay switch.

BRAKE SW (ON /OFF)
This parameter indicates the state of the brake switch.

BLOWER FAN (ON / OFF)
This parameter indicates the state of the blower fan motor switch.

A/C MAG SWITCH (A/C COMPRESSOR RELAY, ON/OFF)

This parameter indicates the state of the A/C switch.

Inspection of ECM and Its Circuits

ECM and its circuits can be checked at ECM wiring connectors by measuring voltage, pulse signal and resistance.

CAUTION:
ECM cannot be checked by itself. It is strictly prohibited to connect voltmeter or ohmmeter to ECM with connector disconnected from it.

Voltage Check

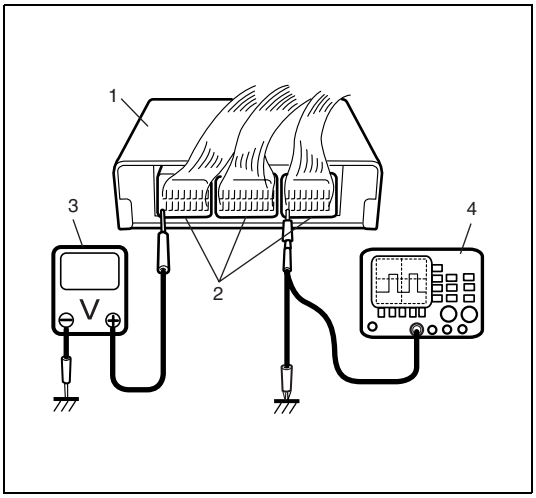

1) Remove ECM (1) from vehicle body referring to "Engine Control Module (ECM)" in Section 6E.
2) Check voltage and/or pulse signal at each terminal of couplers (2) connected, using voltmeter (3) and oscilloscope (4).

NOTE:

- **As each terminal voltage is affected by the battery voltage, confirm that it is 11 V or more when ignition switch is ON.**
- **Voltage with asterisk(*) cannot be measured by voltmeter because it is pulse signal.**
  Check it with oscilloscope if necessary.

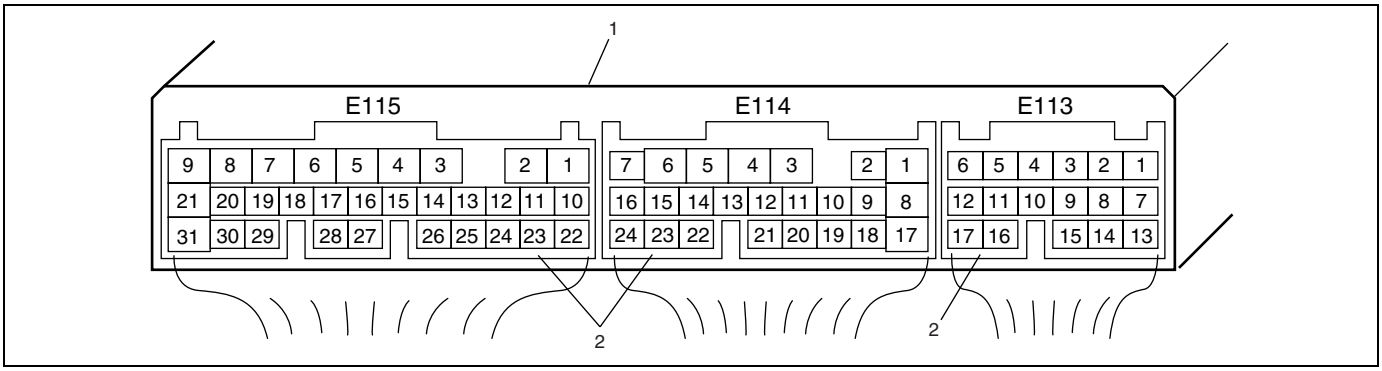

1.	ECM
2.	ECM connectors (Viewed from harness side)

ECM Terminal Voltage Values Table

Terminal No.		Wire color	Circuit	Normal voltage	Condition	Remarks
E115	1	BLK	Ground for ECM	Below 0.3 V	Ignition switch turned ON.	–
	2	BLK	Ground for ECM	Below 0.3 V	Ignition switch turned ON.	–
	3	BLK	Ground for ECM	Below 0.3 V	Ignition switch turned ON.	–
	4	BLU/RED	EVAP canister purge valve output	10 – 14 V	Ignition switch turned ON.	–
				*0 – 0.6 V ↑↓ 8 – 14 V (Reference waveform No.20)	Vehicle running at 20 km/h, 12 mph with after warming up engine.	Output signal is active low duty pulse. Duty ratio varies depending on vehicle condition.
	5	BLU/ORN	Power steering pressure switch signal	10 – 14 V	Ignition switch turned ON.	–
				0 – 1 V	With engine at idle speed, turning steering wheel to the right or left as far as it stops.	
	6	GRN/YEL	IAC valve output	*0 – 2 V ↑↓ 8 – 14 V (Reference waveform No.18)	Ignition switch turned ON.	Output signal is active low duty pulse. Duty ratio varies depending on engine condition.
				*0 – 2 V ↑↓ 8 – 14 V (Reference waveform No.19)	Engine running at idling with after warming up engine.	
	7	PNK/BLK	Heater output of heated oxygen sensor (engine equipped with EGR valve)	10 – 14 V	Ignition switch ON	–
				*0 – 2 V ↑↓ 8 – 14 V (Reference waveform No.13 and No.14)	Engine running at idling with after warming up engine.	Output signal is active low duty pulse. Duty ratio varies depending on engine condition.
	8	WHT/BLK	Fuel injector No.4 output	10 – 14 V	Ignition switch turned ON.	–
				*0 – 0.6 V ↑↓ 10 – 14 V (Reference waveform No.4 and No.5)	Engine running at idling with after warming up engine.	Output signal is active low pulse. Pulse frequency varies depending on engine speed.

Terminal No.		Wire color	Circuit	Normal voltage	Condition	Remarks
E115	9	RED/WHT	Fuel injector No.1 output	10 – 14 V	Ignition switch turned ON.	–
				*0 – 0.6 V ↑↓ 10 – 14 V (Reference waveform No.4, No.8 and No.25)	Engine running at idling with after warming up engine.	Output signal is active low pulse. Pulse frequency varies depending on engine speed.
	10	BLK/BLU	Ground for sensors	Below 0.3 V	Ignition switch turned ON.	–
	11	WHT	CMP sensor signal (vehicle not equipped with immobilizer control system)	0 – 1 V or 4 – 5 V	Ignition switch turned ON.	–
				*0 – 0.6 V ↑↓ 4 – 5 V (Reference waveform No.11 and No.12)	Engine running at idling with after warming up engine.	Sensor signal is pulse. Pulse frequency varies depending on engine speed. (6 pulses are generated par 1 camshaft revolution.)
		GRN/BLK	Engine coolant temp. (ECT) sensor signal (vehicle equipped with immobilizer control system)	3.3 – 3.8 V	Ignition switch turned ON, ECT at 0 °C, 32 °F	–
				1.38 – 1.72 V	Ignition switch turned ON, ECT at 50 °C, 122 °F	
				0.40 – 0.53 V	Ignition switch turned ON, ECT at 100 °C, 212 °F	
	12	–	–	–	–	–
	13	RED	Oxygen signal of heated oxygen sensor (engine equipped with EGR valve)	0 – 1 V	Ignition switch turned ON.	–
				*Deflects between over 0.5 V and under 0.45 V (Reference waveform No.13 and No.14)	While engine running at 2,000 r/min. for 1 min. or longer after warmed up engine.	–
		RED/BLU	CO adjusting resistor signal (engine not equipped with EGR valve)	0 – 5 V	Ignition switch turned ON.	–

Terminal No.		Wire color	Circuit	Normal voltage	Condition	Remarks
E115	14	GRN/BLK	Engine coolant temp. (ECT) sensor signal (vehicle not equipped with immobilizer control system)	3.3 – 3.8 V	Ignition switch turned ON, ECT at 0 °C, 32 °F	–
				1.38 – 1.72 V	Ignition switch turned ON, ECT at 50 °C, 122 °F	–
				0.40 – 0.53 V	Ignition switch turned ON, ECT at 100 °C, 212 °F	–
		WHT	CMP sensor signal (vehicle equipped with immobilizer control system)	0 – 1 V or 4 – 5 V	Ignition switch turned ON.	–
				*0 – 0.6 V ↑↓ 4 – 5 V (Reference waveform No.11 and No.12)	Engine running at idling with after warming up engine.	Sensor signal is pulse. Pulse frequency varies depending on engine speed. (6 pulses are generated par 1 camshaft revolution.)
	15	LT GRN/BLK	Intake air temp. (IAT) sensor signal (vehicle not equipped with immobilizer control system)	2.15 – 2.60 V	Ignition switch turned ON, IAT at 20 °C, 68 °F)	–
				0.46 – 0.60 V	Ignition switch turned ON, IAT at 80 °C, 176 °F	
				0.18 – 0.23 V	Ignition switch turned ON, IAT at 120 °C, 248 °F)	
		GRN/RED	CKP sensor signal (vehicle equipped with immobilizer control system)	0 – 1 V or 4 – 5 V	Ignition switch turned ON.	–
				*0 – 0.6 V ↑↓ 4 – 5 V (Reference waveform No.11 and No.12)	Engine running at idling with after warming up engine.	Sensor signal is pulse. Pulse frequency varies depending on engine speed. (30 (36 – 6) pulses are generated par 1 crankshaft revolution.)
	16	LT GRN	Throttle position (TP) sensor signal	0.5 – 1.0 V (Reference waveform No.15)	Ignition switch turned ON and throttle valve at idle position with warmed engine.	–
				3.4 – 4.7 V (Reference waveform No.16)	Ignition switch turned ON and throttle valve at full open position.	

Terminal No.		Wire color	Circuit	Normal voltage	Condition	Remarks
E115	17	GRY/BLU	EGR valve (stepper motor coil 3) output (vehicle equipped with HO2S)	10 – 14 V	Ignition switch turned ON.	–
				*0 – 1 V ↑↓ 10 – 14 V (Reference waveform No.21)	Engine running at idling with after warming up engine.	Output signal is active low duty pulse. Pulse generated times depending on vehicle condition.
	18	GRY	EGR valve (stepper motor coil 1) output (vehicle equipped with HO2S)	10 – 14 V	Ignition switch turned ON.	–
				*0 – 1 V ↑↓ 10 – 14 V (Reference waveform No.21)	Engine running at idling with after warming up engine.	Output signal is active low duty pulse. Pulse generated times depending on vehicle condition.
	19	BRN/BLK	Ignition coil No.2 and No.3 output	0 – 0.6 V	Ignition switch turned ON.	–
				*0 – 0.6 V ↑↓ 3 – 5 V (Reference waveform No.22 and No.23)	Engine running at idling with after warming up engine.	Output signal is active high pulse. Pulse frequency varies depending on engine speed.
	20	BRN/WHT	Ignition coil No.1 and No.4 output	0 – 0.6 V	Ignition switch turned ON.	
				*0 – 0.6 V ↑↓ 3 – 5 V (Reference waveform No.22, No.24 and No.25)	Engine running at idling with after warming up engine.	Output signal is active high pulse. Pulse frequency varies depending on engine speed.
	21	RED/GRN	Fuel injector No.2 output	10 – 14 V	Ignition switch turned ON.	–
				*0 – 0.6 V ↑↓ 10 – 14 V (Reference waveform No.4 and No.7)	Engine running at idling with after warming up engine.	Output signal is active low pulse. Pulse frequency varies depending on engine speed.
	22	LT GRN /RED	Output of 5 V power source for TP sensor, MAP sensor and CO adjusting resistor (engine not equipped with EGR valve)	4.5 – 5.5 V	Ignition switch turned ON.	–

Terminal No.		Wire color	Circuit	Normal voltage	Condition	Remarks
E115	23	GRN/RED	CKP sensor signal (vehicle not equipped with immobilizer control system)	0 – 1 V or 4 – 5 V	Ignition switch turned ON.	–
				*0 – 0.6 V ↑↓ 4 – 5 V (Reference waveform No.11 and No.12)	Engine running at idling with after warming up engine.	Sensor signal is pulse. Pulse frequency varies depending on engine speed. (30 (36 - 6) pulses are generated par 1 crankshaft revolution.)
		LT GRN /BLK	Intake air temp. (IAT) sensor signal (vehicle equipped with immobilizer control system)	2.15 – 2.60 V	Ignition switch turned ON, IAT at 20 °C, 68 °F	–
				0.46 – 0.60 V	Ignition switch turned ON, IAT at 80 °C, 176 °F	
				0.18 – 0.23 V	Ignition switch turned ON, IAT at 120 °C, 248 °F	
	24	–	–	–	–	–
	25	RED	Knock sensor signal	2 – 3 V (Reference waveform No.9 and No.10)	Ignition switch turned ON.	–
					Engine running at 4000 r/min. with after warming up engine.	–
	26	GRN	Manifold absolute pressure (MAP) sensor signal	Approx. 1.8 V (Reference waveform No.15)	Ignition switch turned ON with barometric pressure at 100 kPa, 760 mmHg.	–
				Approx. 4.2 V (Reference waveform No.16)	When engine racing, after warming up engine with barometric pressure at 100 kPa, 760 mmHg.	
	27	BLK/WHT	ECT signal for combination meter	*0 – 0.6 V ↑↓ 10 – 14 V (Reference waveform No.3)	Ignition switch turned ON.	Output signal is 1 Hz active low duty pulse. Duty ratio varies depending on ECT. ECT -40 °C (-40 °F) = 10% ON duty ECT 120 °C (248 °F) = 90% ON duty

Terminal No.		Wire color	Circuit	Normal voltage	Condition	Remarks
E115	28	GRY/BLK	EGR valve (stepper motor coil 4) output (vehicle equipped with HO2S)	10 – 14 V	Ignition switch turned ON.	–
				*0 – 1 V ↑↓ 10 – 14 V (Reference waveform No.21)	Engine running at idling with after warming up engine.	Output signal is active low duty pulse. Pulse generated times depending on vehicle condition.
	29	GRY/RED	EGR valve (stepper motor coil 2) output (vehicle equipped with HO2S)	10 – 14 V	Ignition switch turned ON.	–
				*0 – 1 V ↑↓ 10 – 14 V (Reference waveform No.21)	Engine running at idling with after warming up engine.	Output signal is active low duty pulse. Pulse generated times depending on vehicle condition.
	30	GRN	ABS signal (if equipped)	10 – 14 V	Ignition switch turned ON.	–
	31	WHT/GRN	Fuel injector No.3 output	10 – 14 V	Ignition switch turned ON.	–
				*0 – 0.6 V ↑↓ 10 – 14 V (Reference waveform No.4 and No.6)	Engine running at idling with after warming up engine.	Output signal is active low pulse. Pulse frequency varies depending on engine speed.

Terminal No.		Wire Color	Circuit	Normal Voltage	Condition	Remarks
E114	1	PNK/BLU (Left-hand steering vehicle)	A/C compressor relay output (if equipped)	10 – 14 V	Engine running, A/C switch OFF and heater fan switch OFF position.	–
		PNK (Right-hand steering vehicle)		0 – 1 V	Engine running, A/C switch ON and heater fan switch 1st position or more.	–
	2	–	–	–	–	–
	3	–	–	–	–	–
	4	–	–	–	–	–
	5	BLU/BLK	Main power supply	10 – 14 V	Ignition switch turned ON.	–
	6	BLU/BLK	Main power supply	10 – 14 V	Ignition switch turned ON.	–
	7	WHT	Power source for ECM internal memory	10 – 14 V	Ignition switch turned ON.	–

Terminal No.		Wire Color	Circuit	Normal Voltage	Condition	Remarks
E114	8	RED/GRN	Duty output terminal	0 – 1 V	Ignition switch turned ON.	–
	9	–	–	–	–	–
	10	BLU	Main power supply relay output	10 – 14 V	Ignition switch turned OFF.	–
				0 – 2 V	Ignition switch turned ON.	
	11	BLK/WHT	Ignition switch signal	0 – 1 V	Ignition switch turned OFF.	–
				10 – 14 V	Ignition switch turned ON.	
	12	RED/WHT	Rear defogger switch signal	10 – 14 V	Ignition switch turned ON, rear defogger switch ON.	–
				0 – 1 V	Ignition switch ON, rear defogger switch OFF.	
	13	WHT/BLU	Diagnosis switch terminal	4 – 5 V	Ignition switch turned ON.	–
	14	WHT/RED	A/T fluid temp. sensor signal (A/T)	Refer to “Inspection of TCM and Its Circuits” in Section 7B.		
	15	PNK	Test switch terminal	10 – 14 V	Ignition switch turned ON.	–
	16	GRN/WHT	A/C switch signal (if equipped)	10 – 14 V	Ignition switch turned ON, A/C switch and heater blower switch selected at OFF.	–
				0 – 1 V	Ignition switch turned ON, A/C switch ON and heater blower switch selected 1st position or more.	
	17	RED/YEL	Lighting switch signal	10 – 14 V	Lighting switch ON.	–
				0 – 1 V	Lighting switch OFF.	
	18	PNK/BLK	A/C condenser fan relay output (if equipped)	10 – 14 V	Engine running, A/C switch OFF and heater fan switch OFF position.	–
				0 – 1 V	Engine running, A/C switch ON and heater fan switch 1st position or more.	

Terminal No.		Wire Color	Circuit	Normal Voltage	Condition	Remarks
E114	19	WHT/GRN	Fuel pump relay output	0 – 2.5 V	For 2 sec. from the time is ignition switch turned to ON or while engine is running.	–
				10 – 14 V	On and after 3sec. from the time is ignition switch turned to ON or while engine is stop.	
	20	BLK/RED (A/T)	Starting motor signal	0 – 1 V	Ignition switch turned ON.	–
		BLK/YEL (M/T)		6 – 14 V	While engine cranking.	
	21	GRN/WHT	Stop lamp switch signal	0 – 1 V	Ignition switch turned ON, stop lamp not lighted up.	–
	22	YEL/GRN	Vehicle speed sensor signal	*0 – 1 V ↑↓ 10 – 14 V (Reference waveform No.17)	Vehicle running.	Sensor signal is pulse. Pulse frequency varies depending on vehicle speed. 21 pulses are generated par sec. at 30 km/h, 19 mph. (2548 pulses/km)
	23	–	–	–	–	–
	24	–	–	–	–	–

Terminal No.		Wire Color	Circuit	Normal Voltage	Condition	Remarks
E113	1	WHT/RED	A/C evaporator outlet air temp. sensor signal (if equipped)	3.4 – 3.7 V	Ignition switch turned ON at A/C evaporator outlet temperature 0 °C (32 °F).	–
				2.5 – 2.8 V	Ignition switch turned ON at A/C evaporator outlet temperature 15 °C (59 °F).	
				1.7 – 2.0 V	Ignition switch turned ON at A/C evaporator outlet temperature 30 °C (86 °F).	
	2	–	–	–	–	–
	3	–	–	–	–	–
	4	BLK/YEL	A/C compressor signal for TCM (AT, if equipped)	0 – 1 V	Ignition switch ON, A/C compressor turned ON.	–
				8 – 14 V	Ignition switch ON, A/C compressor turned OFF.	
	5	BRN/ORN	Engine torque signal for TCM (AT)	Refer to “Inspection of TCM and Its Circuits” in Section 7B.		

Terminal No.		Wire Color	Circuit	Normal Voltage	Condition	Remarks
E113	6	GRN/YEL	D-range idle up signal (AT)	8 – 14 V	Ignition switch turned ON, selector lever at “P” or “N”.	–
				0 – 1 V	Ignition switch turned ON, selector lever at “R”, “D”, “3”, “2” or “L”.	
	7	YEL/BLK	Serial communication line of data link connector 5 V (vehicle equipped with immobilizer control system)	4 – 5.5 V	Ignition switch turned ON.	–
	8	–	–	–	–	–
	9	PPL/YEL	Malfunction indicator lamp	10 – 14 V	Engine running.	–
				0 – 1 V	Ignition switch turned ON with engine stop.	
	10	–	–	–	–	–
	11	PNK/GRN	Serial communication line of data link connector 12 V	8 – 14 V	Ignition switch turned ON.	–
	12	YEL	Torque control signal (AT)	9 – 14 V	Ignition switch turned ON.	–
	13	BLU/ORN	Heater blower switch signal	10 – 14 V	Ignition switch turned ON, heater blower switch selected at OFF.	–
				0 – 1 V	Ignition switch turned ON, heater blower switch selected at 3rd speed position or more.	
	14	BLK/BLU	Ground for A/C evaporator outlet air temp. sensor	Below 0.3 V	Ignition switch turned ON.	–
	15	BLK/RED	Throttle opening signal for TCM (AT)	Refer to “Inspection of TCM and Its Circuits” in Section 7B.		
	16	BRN	Engine revolution signal for tachometer	0 – 0.8 V	Ignition switch turned ON with engine stop.	–
				*0 – 1 V ↑↓ 8 – 14 V (Reference waveform No.1 and No.2)	While engine running.	Output signal is pulse. Pulse frequency varies depending on engine speed. (2 pulses are generated par 1 crankshaft revolution. 3000 r/min. = 100 Hz)
	17	YEL/RED	ECT signal for TCM (AT)	Refer to “Inspection of TCM and Its Circuits” in Section 7B.		

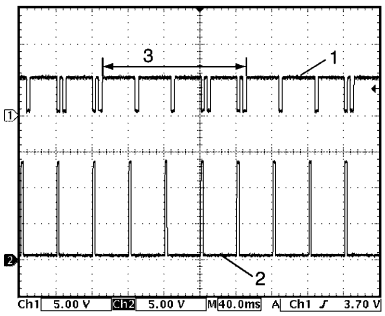

1. Reference waveform No.1

Ignition pulse (engine revolution) (2) signal at engine idling

Measurement terminal	CH1: E115-11 (*E115-14) to E115-1 CH2: E113-16 to E115-1
Oscilloscope setting	CH1: 5 V/DIV, CH2: 5 V/DIV TIME: 40 ms/DIV
Measurement condition	• After warmed up to normal operating temperature • Engine at specified idle speed

1. CMP sensor signal
3. 720° crank angle
*: Vehicle equipped with immobilizer control system

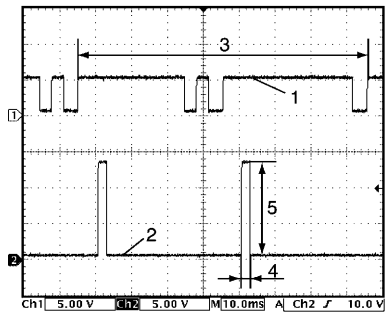

2. Reference waveform No.2

Ignition pulse (engine revolution) (2) signal at engine idling

Measurement terminal	CH1: E115-11 (*E115-14) to E115-1 CH2: E113-16 to E115-1
Oscilloscope setting	CH1: 5 V/DIV, CH2: 5 V/DIV TIME: 10 ms/DIV
Measurement condition	• After warmed up to normal operating temperature • Engine at specified idle speed

1. CMP sensor signal
3. 360° crank angle
4. 2 to 4 msec.
5. 10 – 14 V
*: Vehicle equipped with immobilizer control system

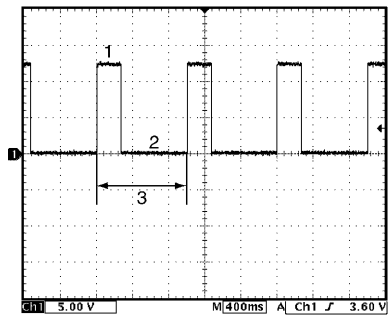

3. Reference waveform No.3

Engine coolant temperature signal for combination meter at engine idling

Measurement terminal	CH1: E115-27 to E115-1
Oscilloscope setting	CH1: 5 V/DIV TIME: 400 ms/DIV
Measurement condition	• After warmed up to normal operating temperature • Engine at specified idle speed

1. OFF signal
2. ON signal
3. One duty cycle (Approx. 1 sec.)

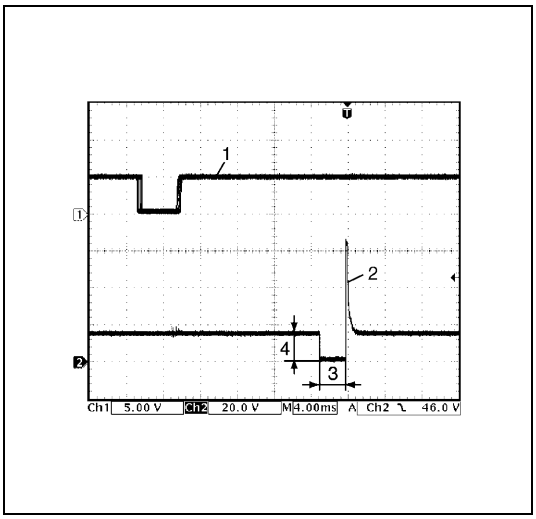

4. Reference waveform No.4

Fuel injector signal (2) at engine idling

Measurement terminal	CH1: E115-11 (*E115-14) to E115-1 CH2: E115-8 to E115-1
Oscilloscope setting	CH1: 5 V/DIV, CH2: 20 V/DIV TIME: 4 ms/DIV
Measurement condition	• After warmed up to normal operating temperature • Engine at specified idle speed

1. CMP sensor signal
3. Fuel injection pulse width: 2 – 4 msec.
*: Vehicle equipped with immobilizer control system

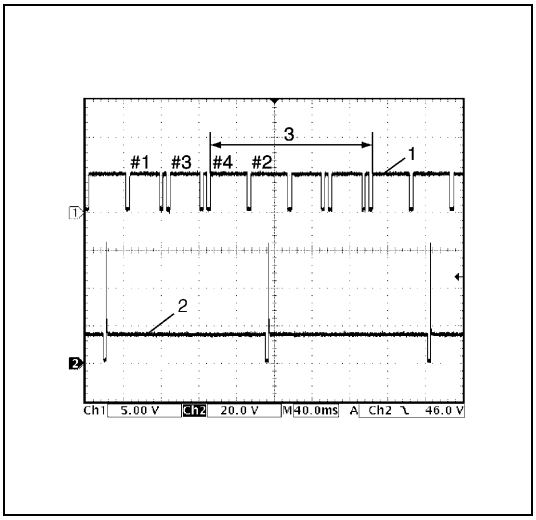

5. Reference waveform No.5

No.4 fuel injector signal (2) at engine idling

Measurement terminal	CH1: E115-11 (*E115-14) to E115-1 CH2: E115-8 to E115-1
Oscilloscope setting	CH1: 5 V/DIV, CH2: 20 V/DIV TIME: 40 ms/DIV
Measurement condition	• After warmed up to normal operating temperature • Engine at specified idle speed

1. CMP sensor signal
3. 720° crank angle
*: Vehicle equipped with immobilizer control system

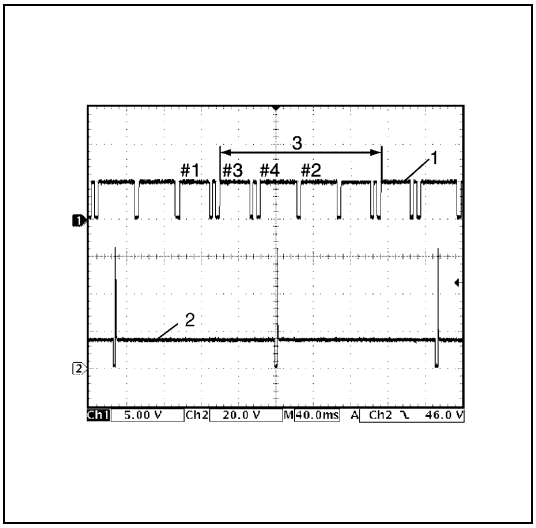

6. Reference waveform No.6

No.3 fuel injector signal (2) at engine idling

Measurement terminal	CH1: E115-11 (*E115-14) to E115-1 CH2: E115-31 to E115-1
Oscilloscope setting	CH1: 5 V/DIV, CH2: 20 V/DIV TIME: 40 ms/DIV
Measurement condition	• After warmed up to normal operating temperature • Engine at specified idle speed

1. CMP sensor signal
3. 720° crank angle
*: Vehicle equipped with immobilizer control system

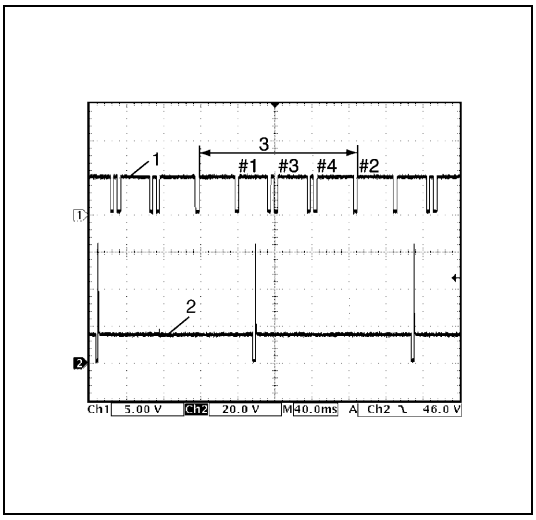

7. Reference waveform No.7

No.2 fuel injector signal (2) at engine idling

Measurement terminal	CH1: E115-11 (*E115-14) to E115-1 CH2: E115-21 to E115-1
Oscilloscope setting	CH1: 5 V/DIV, CH2: 20 V/DIV TIME: 40 ms/DIV
Measurement condition	• After warmed up to normal operating temperature • Engine at specified idle speed

1. CMP sensor signal
3. 720° crank angle
*: Vehicle equipped with immobilizer control system

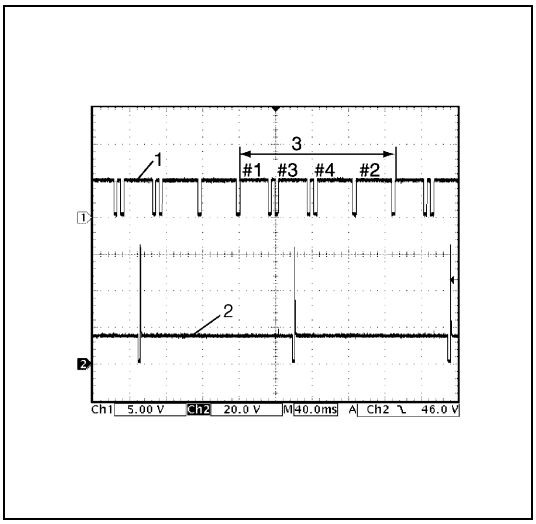

8. Reference waveform No.8

No.1 fuel injector signal (2) at engine idling

Measurement terminal	CH1: E115-11 (*E115-14) to E115-1 CH2: E115-9 to E115-1
Oscilloscope setting	CH1: 5 V/DIV, CH2: 20 V/DIV TIME: 40 ms/DIV
Measurement condition	• After warmed up to normal operating temperature • Engine at specified idle speed

1. CMP sensor signal
3. 720° crank angle
*: Vehicle equipped with immobilizer control system

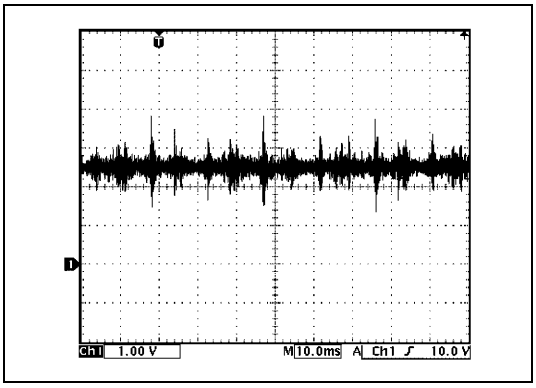

9. Reference waveform No.9

Knock sensor signal at engine speed 4000 r/min.

Measurement terminal	CH1: E115-25 to E115-1
Oscilloscope setting	CH1: 1 V/DIV TIME: 10 ms/DIV
Measurement condition	• After warmed up to normal operating temperature • Run engine at 4000 r/min.

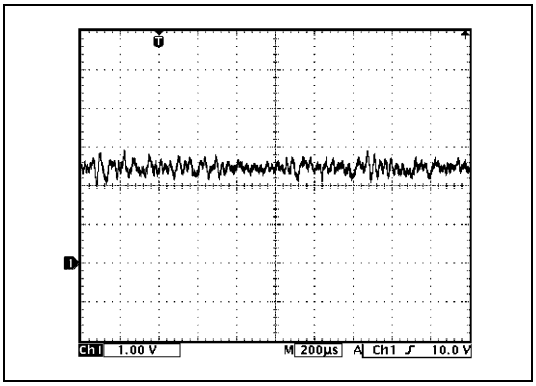

10. Reference waveform No.10

Knock sensor signal at engine speed 4000 r/min.

Measurement terminal	CH1: E115-25 to E115-1
Oscilloscope setting	CH1: 1 V/DIV TIME: 200 µs/DIV
Measurement condition	• After warmed up to normal operating temperature • Run engine at 4000 r/min.

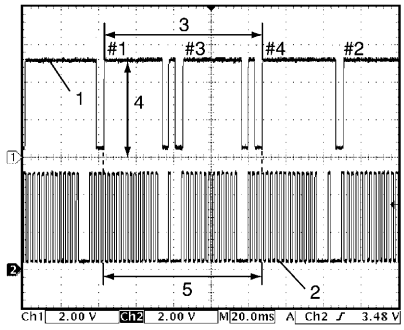

11. Reference waveform No.11

CMP sensor signal at engine idling

Measurement terminal	CH1: E115-11 (*E115-14) to E115-1 CH2: E115-23 (*E115-15) to E115-1
Oscilloscope setting	CH1: 2 V/DIV, CH2: 2 V/DIV TIME: 20 ms/DIV
Measurement condition	• After warmed up to normal operating temperature • Engine at specified idle speed

1. CMP sensor signal
2. CKP sensor signal
3. 360° crank angle
4. 4 – 5 V
5. 36 – 6 = 30 CKP pulse
*: Vehicle equipped with immobilizer control system

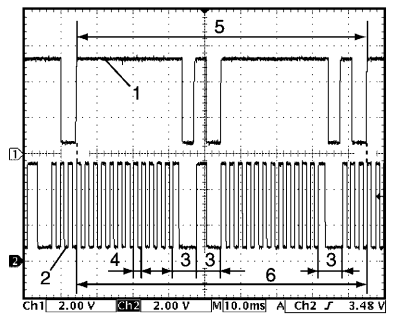

12. Reference waveform No.12

CMP sensor signal at engine idling

Measurement terminal	CH1: E115-11 (*E115-14) to E115-1 CH2: E115-23 (*E115-15) to E115-1
Oscilloscope setting	CH1: 2 V/DIV, CH2: 2 V/DIV TIME: 10 ms/DIV
Measurement condition	• After warmed up to normal operating temperature • Engine at specified idle speed

1. CMP sensor signal
2. CKP sensor signal
3. 30° crank angle
4. 10° crank angle
5. 360° crank angle
6. 36 – 6 = 30 CKP pulse
*: Vehicle equipped with immobilizer control system

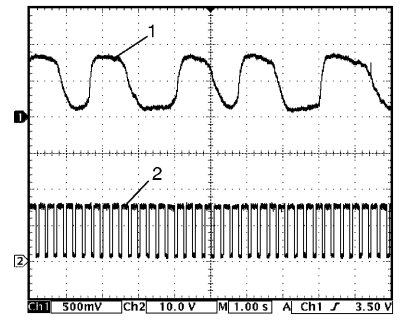

13. Reference waveform No.13

Heated oxygen sensor signal (1) at engine idling

Measurement terminal	CH1: E115-13 to E115-10 CH2: E115-7 to E115-1
Oscilloscope setting	CH1: 500 m/DIV, CH2: 10 V/DIV TIME: 1 s/DIV
Measurement condition	• After warmed up to normal operating temperature • Engine at specified idle speed

2. Heated oxygen sensor heater signal

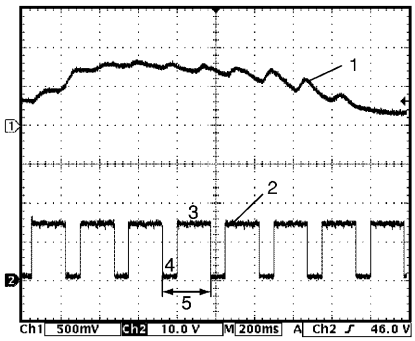

14. Reference waveform No.14

Heated oxygen sensor heater signal (2) at engine idling

Measurement terminal	CH1: E115-13 to E115-10 CH2: E115-7 to E115-1
Oscilloscope setting	CH1: 500 m/DIV, CH2: 10 V/DIV TIME: 200 ms/DIV
Measurement condition	• After warmed up to normal operating temperature • Engine at specified idle speed

1. Heated oxygen sensor signal
3. OFF signal
4. ON signal
5. One duty cycle

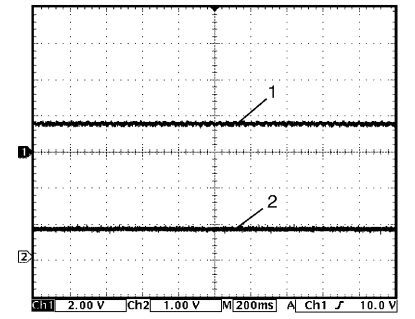

15. Reference waveform No.15

Manifold absolute pressure sensor signal (1) at ignition switch turned ON

Measurement terminal	CH1: E115-26 to E115-10 CH2: E115-16 to E115-10
Oscilloscope setting	CH1: 2 V/DIV, CH2: 1 V/DIV TIME: 200 ms/DIV
Measurement condition	• After warmed up to normal operating temperature • Ignition switch turned ON

2. Throttle position sensor signal

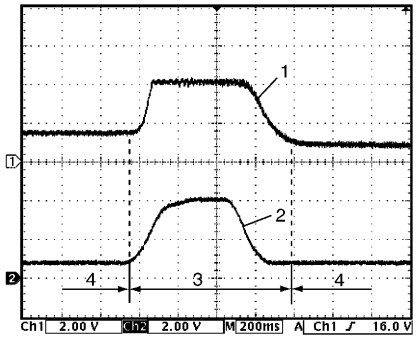

16. Reference waveform No.16

Manifold absolute pressure sensor signal (1) at engine racing

Measurement terminal	CH1: E115-26 to E115-10 CH2: E115-16 to E115-10
Oscilloscope setting	CH1: 2 V/DIV, CH2: 2 V/DIV TIME: 200 ms/DIV
Measurement condition	• After warmed up to normal operating temperature • Engine racing

2. Throttle position sensor signal
3. Racing
4. Idle

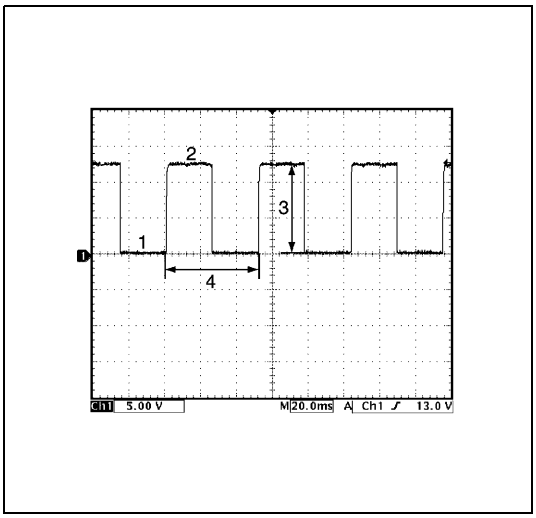

17. Reference waveform No.17

VSS signal at 30 km/h (19 mph)

Measurement terminal	CH1: E114-22 to E115-1
Oscilloscope setting	CH1: 5 V/DIV TIME: 20 ms/DIV
Measurement condition	• After warmed up to normal operating temperature • Drive vehicle at 30 km/h (19 mph)

1. ON signal
2. OFF signal
3. 10 – 14 V
4. One duty cycle (Approx. 45 - 55 msec.)

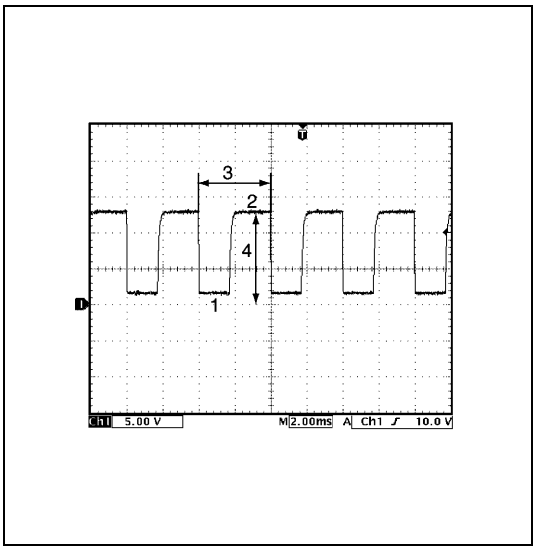

18. Reference waveform No.18

IAC signal at ignition switch turned ON

Measurement terminal	CH1: E115-6 to E115-1
Oscilloscope setting	CH1: 5 V/DIV TIME: 2 ms/DIV
Measurement condition	• After warmed up to normal operating temperature • Ignition switch turned ON • All accessory switch turned OFF

1. ON signal
2. OFF signal
3. One duty cycle (Approx. 4 msec.)
4. 8-14 V

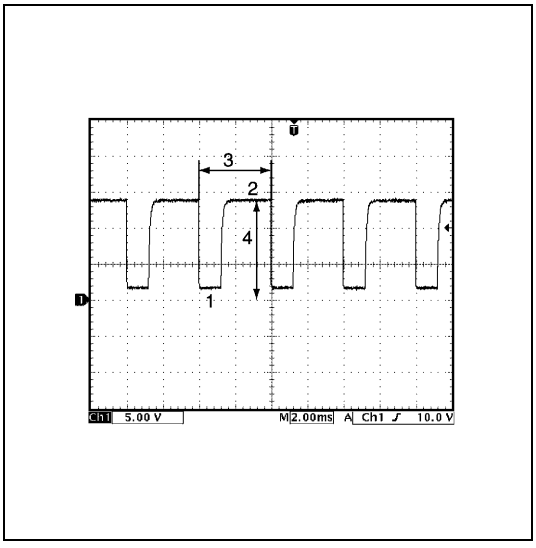

19. Reference waveform No.19

IAC signal at engine idling

Measurement terminal	CH1: E115-6 to E115-1
Oscilloscope setting	CH1: 5 V/DIV TIME: 2 ms/DIV
Measurement condition	• After warmed up to normal operating temperature • Engine at specified idle speed • All accessory switch turned OFF

1. ON signal
2. OFF signal
3. One duty cycle (Approx. 4 msec.)
4. 8-14 V

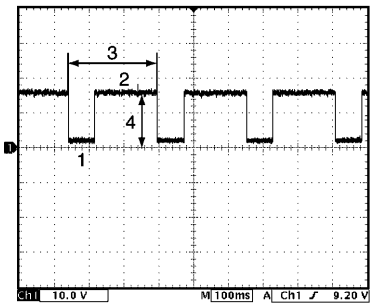

20. Reference waveform No.20

EVAP canister purge valve signal

Measurement terminal	CH1: E115-4 to E115-1
Oscilloscope setting	CH1: 10 V/DIV TIME: 100 ms/DIV
Measurement condition	• After warmed up to normal operating temperature • Drive vehicle at 20 km/h (12 mph)

1. ON signal
2. OFF signal
3. One duty cycle
4. 10-14 V

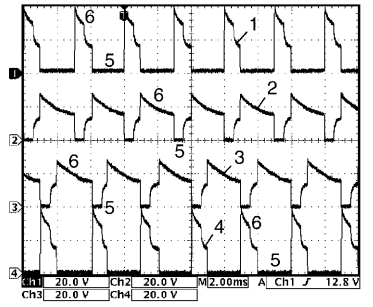

21. Reference waveform No.21

EGR valve signal

Measurement terminal	CH1: E115-18 to E115-1 CH2: E115-29 to E115-1 CH3: E115-17 to E115-1 CH4: E115-28 to E115-1
Oscilloscope setting	CH1: 20 V/DIV, CH2: 20 V/DIV, CH3: 20 V/DIV, CH4: 20 V/DIV TIME: 2 ms/DIV
Measurement condition	• After warmed up to normal operating temperature • Engine at specified idle speed

1. EGR valve stepper motor coil 1 signal
2. EGR valve stepper motor coil 2 signal
3. EGR valve stepper motor coil 3 signal
4. EGR valve stepper motor coil 4 signal
5. ON signal
6. OFF signal

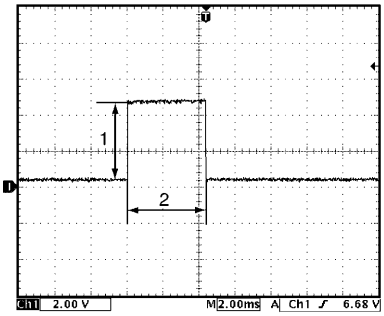

22. Reference waveform No.22

Ignition coil signal at engine idling

Measurement terminal	CH1: E115-20 to E115-1
Oscilloscope setting	CH1: 2 V/DIV TIME: 2 ms/DIV
Measurement condition	• After warmed up to normal operating temperature • Engine at specified idle speed

1. 4 – 6 V
2. 4 – 5 msec

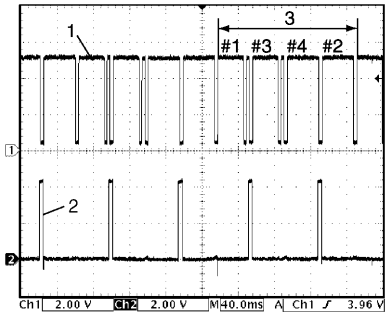

23. Reference waveform No.23

Ignition coil No.2 and No.3 (2) signal at engine idling

Measurement terminal	CH1: E115-11 (*E115-14) to E115-1 CH2: E115-19 to E115-1
Oscilloscope setting	CH1: 2 V/DIV, CH2: 2 V/DIV TIME: 40 ms/DIV
Measurement condition	• After warmed up to normal operating temperature • Engine at specified idle speed

1. CMP sensor signal
3. 720° crank angle
*: Vehicle equipped with immobilizer control system

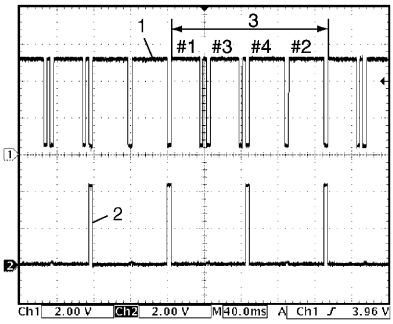

24. Reference waveform No.24

Ignition coil No.1 and No.4 (2) signal at engine idling

Measurement terminal	CH1: E115-11 (*E115-14) to E115-1 CH2: E115-20 to E115-1
Oscilloscope setting	CH1: 2 V/DIV, CH2: 2 V/DIV TIME: 40 ms/DIV
Measurement condition	• After warmed up to normal operating temperature • Engine at specified idle speed

1. CMP sensor signal
3. 720° crank angle
*: *Vehicle equipped with immobilizer control system

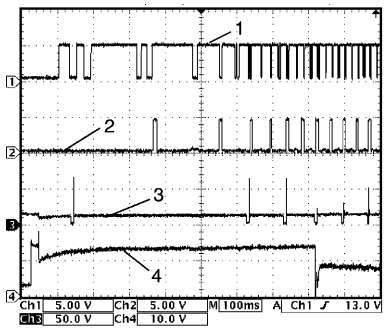

25. Reference waveform No.25

Ignition coil signal and fuel injector signal at engine cranking

Measurement terminal	CH1: E115-11 (*E115-14) to E115-1 CH2: E115-20 to E115-1 CH3: E115-9 to E115-1 CH4: E114-20 to E115-1
Oscilloscope setting	CH1: 5 V/DIV, CH2: 5 V/DIV CH3: 50 V/DIV, CH4: 10 V/DIV TIME: 100 ms/DIV
Measurement condition	• After warmed up to normal operating temperature • Engine at cranking

1. CMP sensor signal
2. Ignition coil No.1 and No. 4 signal
3. No.1 fuel injector signal
4. Engine start signal
*: Vehicle equipped with immobilizer control system

Resistance Check

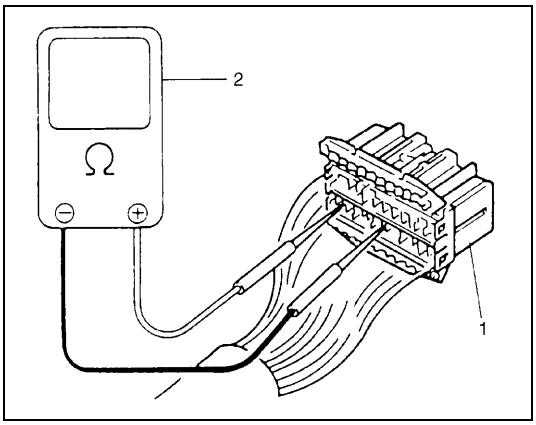

1) Disconnect ECM couplers (1) from ECM with ignition switch OFF.

CAUTION:
Never touch terminals of ECM itself or connect voltmeter or ohmmeter (2).

2) Check resistance between each pair of terminals of disconnected couplers as listed in the following table.

CAUTION:
- **Be sure to connect ohmmeter probe from wire harness side of coupler.**
- **Be sure to turn OFF ignition switch for this check.**
- **Resistance in table below represents that when parts temperature is 20 °C (68 °F).**

Terminals	Circuit	Standard Resistance	Condition
E115-7 to E114-11	HO2S heater	5 – 6.4 Ω	–
E115-9 to E114-5/6	Fuel injector No.1	12.0 – 13.0 Ω	–
E115-21 to E114-5/6	Fuel injector No.2	12.0 – 13.0 Ω	–
E115-31 to E114-5/6	Fuel injector No.3	12.0 – 13.0 Ω	–
E115-8 to E114-5/6	Fuel injector No.4	12.0 – 13.0 Ω	–
E115-28 to E114-5/6	EGR valve (stepper motor coil 4)	20 – 29 Ω	–
E115-17 to E114-5/6	EGR valve (stepper motor coil 3)	20 – 29 Ω	–
E115-29 to E114-5/6	EGR valve (stepper motor coil 2)	20 – 24 Ω	–
E115-18 to E114-5/6	EGR valve (stepper motor coil 1)	20 – 29 Ω	–
E115-4 to E114-5/6	EVAP canister purge valve	28 – 35 Ω	–
E114-19 to E114-11	Fuel pump relay	160 – 240 Ω	–
E114-10 to E115-1	Main relay	160 – 240 Ω	Battery disconnected and ignition switch ON
E115-1 to Body ground	Ground	Below 1.5 Ω	–
E115-2 to Body ground	Ground	Below 1.5 Ω	–
E115-3 to Body ground	Ground	Below 1.5 Ω	–

Component Location

NOTE:

The figure shows left-hand steering vehicle.

For right-hand steering vehicle, parts with (*) are installed at the other side.

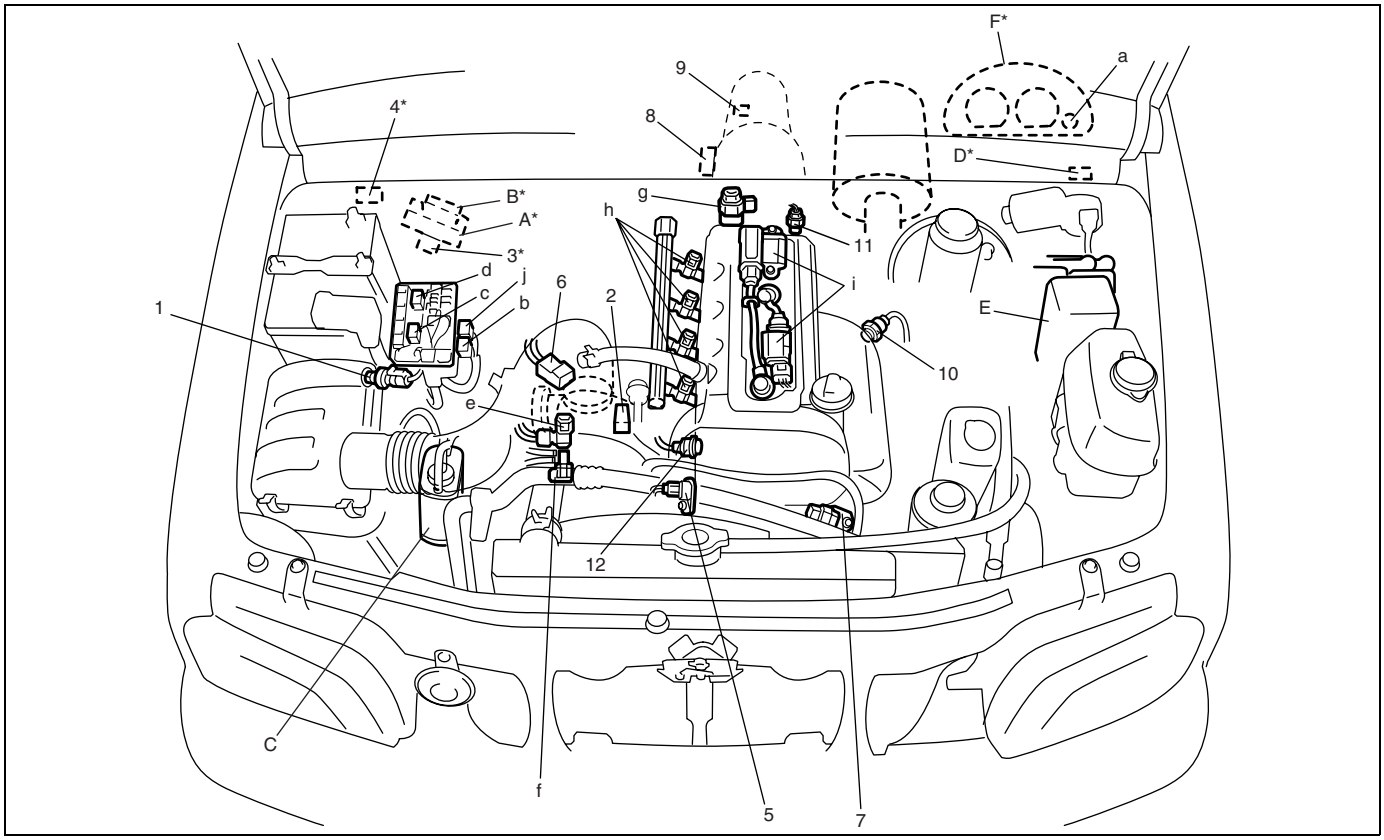

1. IAT sensor	a: MIL	A: ECM
2. TP sensor	b: A/C condenser fan motor relay (if equipped)	B: TCM (if equipped)
3. Diagnosis connector	c: Main relay	C: EVAP canister
4. CO adjusting resistor (if equipped)	d: Fuel pump relay	D: DLC
5. CKP sensor	e: IAC valve	E: ABS control module (if equipped)
6. MAP sensor	f: EVAP canister purge valve	F: Combination meter
7. CMP sensor	g: EGR valve (if equipped)	
8. Transmission range sensor	h: Fuel injector	
9. VSS	i: Ignition coil assemblies	
10. HO2S (if equipped)	j: A/C compressor relay (if equipped)	
11. ECT sensor		
12. Knock sensor		

Table A-1 Malfunction Indicator Lamp Circuit Check – Lamp Does Not Come "ON" at Ignition Switch ON (But Engine at Stop)

Wiring Diagram

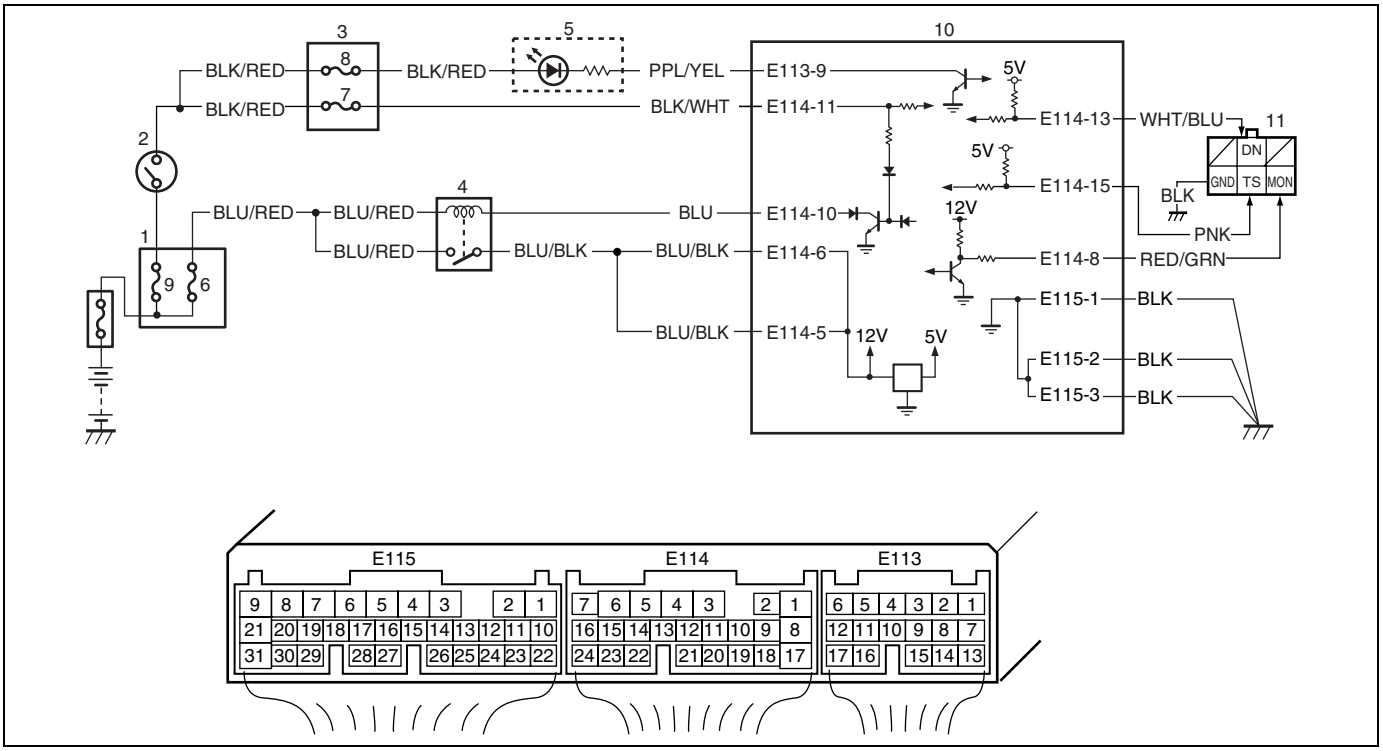

1. Relay box	4. Main relay	7. "IG" fuse	10. ECM
2. Ignition switch	5. Malfunction indicator lamp in combination meter	8. "MTR" fuse	11. Monitor connector
3. Fuse box	6. "FI" fuse	9. "IGN1" fuse	

Circuit Description

When the ignition switch is turned ON, ECM causes the main relay to turn ON (close the contact point). Then, ECM being supplied with the main power, turns ON the malfunction indicator lamp (MIL). When the engine starts to run and no malfunction is detected in the system, MIL goes OFF but if a malfunction was or is detected, MIL remains ON even when the engine is running.

Troubleshooting

Step	Action	Yes	No
1	MIL power supply check 1) Turn ignition switch ON. Do other indicator / warning lights in combination meter comes ON?	Go to Step 2.	"MTR" fuse blown, main fuse blown, ignition switch malfunction, "BLK/RED" circuit between "MTR" fuse and combination meter or poor coupler connection at combination meter.
2	ECM power and ground circuit check Does engine start?	Go to Step 3.	Go to "Table A-5 ECM Power and Ground Circuit Check". If engine is not cranked, go to "Diagnosis Table" in Section 6G.

Step	Action	Yes	No
3	MIL circuit check 1) Turn ignition switch OFF and disconnect connectors from ECM. 2) Check for proper connection to ECM at terminal E113-9. 3) If OK, then using service wire, ground terminal E113-9 in connector disconnected. Does MIL turn on at ignition switch ON?	Substitute a known-good ECM and recheck.	Combination meter faulty, “PPL/YEL” wire circuit open or “PNK” wire shorted to ground.

Table A-2 Malfunction Indicator Lamp Circuit Check – Lamp Remains “ON” after Engine Starts

Wiring Diagram / Circuit Description

Refer to table A-1.

Troubleshooting

Step	Action	Yes	No
1	Diagnostic trouble code (DTC) check 1) Check DTC referring to “Diagnostic Trouble Code (DTC) Check” in this section. Is there any DTC(s)?	Go to Step 2 of “Engine and Emission Control System Check”.	Go to Step 2.
2	DTC check 1) Start engine and recheck DTC while engine running. Is there any DTC(s)?		Go to Step 3.
3	MIL circuit check 1) Turn OFF ignition switch. 2) Disconnect connectors from ECM. Does MIL turn ON at ignition switch ON?	“PPL/YEL” wire circuit shorted to ground.	Substitute a known-good ECM and recheck.

Table A-3 Malfunction Indicator Lamp Circuit Check – MIL Flashes at Ignition Switch ON

Wiring Diagram / Circuit Description

Refer to table A-1.

Troubleshooting

Step	Action	Yes	No
1	MIL flashing pattern check: 1) With the ignition switch ON position, check MIL flashing pattern. Does MIL flashing pattern indicate DTC (diagnostic trouble code)?	Go to Step 2.	Go to “Diagnosis” in Section 8G.
2	Diagnosis switch terminal check: 1) With the ignition switch ON position, check voltage between E114-13 terminal of ECM coupler and ground. Is voltage 4 – 5 V?	Substitute a known-good ECM and recheck.	“WHT/BLU” wire (diagnosis switch terminal) shorted to ground circuit. If OK, substitute a known-good ECM and recheck.

Table A-4 Malfunction Indicator Lamp Circuit Check – MIL Does Not Flash, Just Remains ON or Just Remains OFF Even with Grounding Diagnosis Switch Terminal

Wiring Diagram / Circuit Description

Refer to table A-1.

Troubleshooting

Step	Action	Yes	No
1	Diagnosis switch terminal circuit check: 1) With grounding diagnosis switch terminal and turn the ignition switch ON position, check voltage between E114-13 terminal of ECM connector and ground. Is voltage 0 – 1 V?	Go to Step 2.	“WHT/BLU” wire (diagnosis switch terminal), “BLK” wire of monitor connector open. If OK, substitute a known-good ECM and recheck.
2	Test switch terminal circuit check: 1) With the ignition switch ON position, check voltage between E114-15 terminal of ECM connector and ground. Is voltage 4 – 5 V?	Substitute a known-good ECM and recheck.	“PNK” wire (test switch terminal) shorted to ground circuit. If OK, substitute a known-good ECM and recheck.

Table A-5 ECM Power and Ground Circuit Check – MIL Doesn't Light with Ignition Switch ON and Engine Doesn't Start Though It is Cranked Up

Wiring Diagram

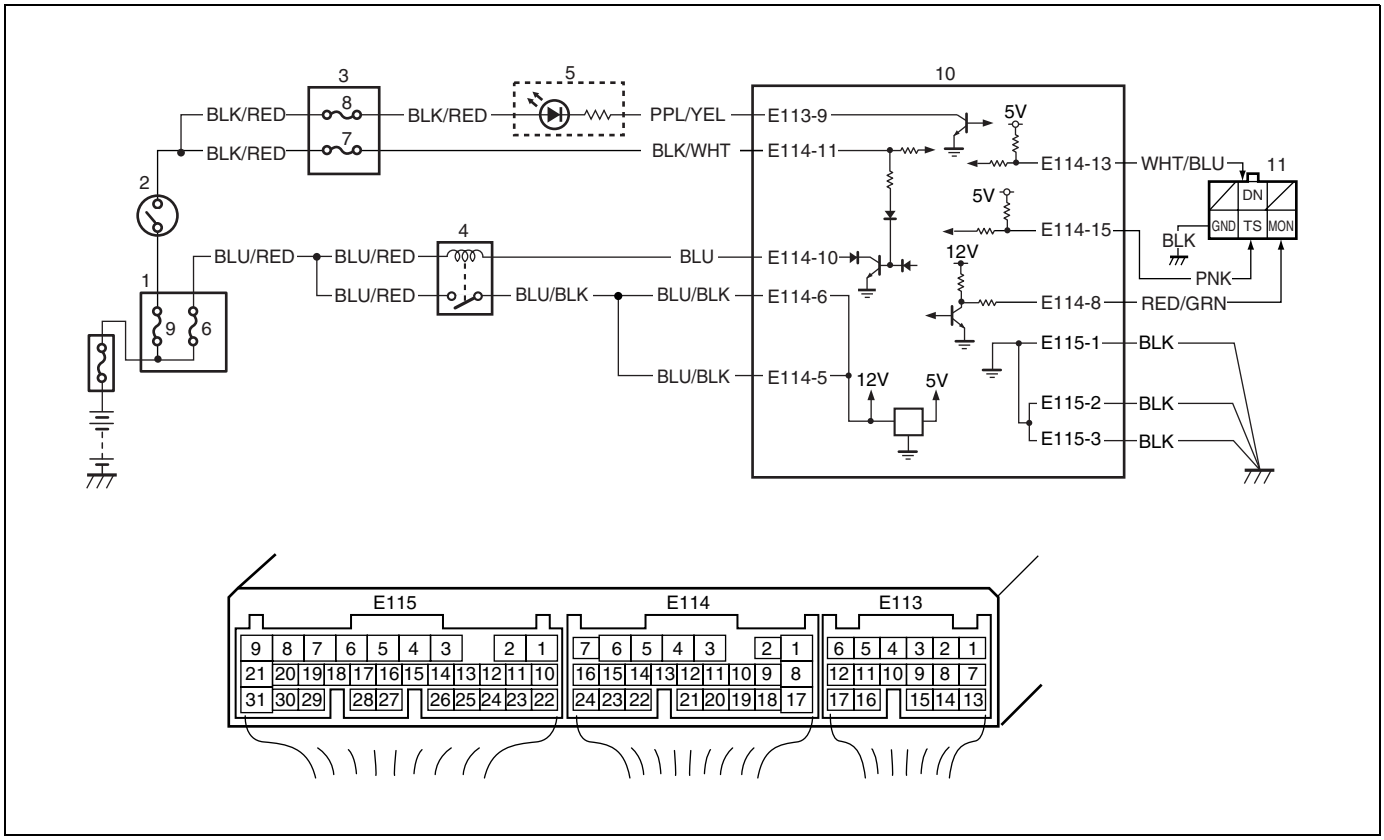

1. Relay box	4. Main relay	7. "IG" fuse	10. ECM
2. Ignition switch	5. Malfunction indicator lamp in combination meter	8. "MTR" fuse	11. Monitor connector
3. Fuse box	6. "FI" fuse	9. "IGN1" fuse	

Circuit Description

When the ignition switch tuned ON, the main relay turns ON (the contact point closes) and the main power is supplied to ECM.

Troubleshooting

Step	Action	Yes	No
1	IG fuse check 1) Disconnect connectors from ECM with ignition switch turned OFF. 2) Check for proper connection to ECM connector at "E113-9", "E114-11", "E114-10", "E114-5", "E114-6", "E115-2" and "E115-3" wire terminals. 3) If OK, check "IG" fuse for fuse blow. Is "IG" fuse in good condition?	Go to Step 2.	Replace fuse and check for short in circuits connected to this fuse.
2	Ignition signal check 1) Turn ignition switch to ON position. 2) Measure voltage between "E114-11" wire terminal of ECM connector and body ground. Is voltage 10 – 14 V?	Go to Step 3.	"BLK/WHT" or "BLK/RED" wire circuit open.

Step	Action	Yes	No
3	Main relay circuit check 1) Turn ignition switch to OFF position. 2) Check for fuse blow at "FI" fuse (1). (See Fig. 1.) 3) If OK, measure voltage between "E114-10" wire terminal of ECM connector and body ground. Is voltage 10 – 14 V?	Go to Step 4.	Go to Step 8.
4	Main relay circuit check 1) Remove ECM from vehicle body and connect connectors to ECM. 2) Turn ignition switch to ON position. 3) Measure voltage between "E114-10" wire terminal of ECM connector and body ground. Is voltage 0 – 1 V?	Go to Step 6.	Go to Step 5.
5	ECM ground circuit check 1) Turn ignition switch to OFF position. 2) Disconnect connectors from ECM. 3) Measure resistance between each "E115-1", "E115-2" and "E115-3" wire terminals of ECM connector and body ground. Is resistance 1 Ω or less?	Substitute a known-good ECM and recheck.	"BLK" wire open circuit or high resistance circuit.
6	Main relay circuit check 1) Disconnect connectors from ECM with ignition switch turned OFF. 2) Using service wire, ground "E114-10" wire terminal of ECM connector and measure voltage between each "E114-5" and "E114-6" wire terminals of ECM connector and body ground. Is voltage 10 – 14 V?	Substitute a known-good ECM and recheck.	Go to Step 7.
7	Main relay circuit check 1) Remove main relay (2) from relay box. (See Fig. 2.) 2) Check for proper connection to main relay connector at "BLU/RED" and "BLU/BLK" wire terminals. 3) If OK, measure resistance between each "E114-5" and "E114-6" wire terminals of ECM connector and "BLU/BLK" wire terminal of main relay connector. Is resistance 1Ω or less?	Go to Step 8.	"BLU/BLK" wire open circuit or high resistance circuit.
8	Main relay circuit check 1) Remove main relay from relay box. 2) Measure voltage between "BLU/RED" wire terminals of main relay connector and body ground. Is voltage 10 – 14 V?	Go to Step 9.	"BLU/RED" wire circuit open.
9	Main relay check 1) Check main relay referring to "Main Relay, Fuel Pump Relay, A/C Compressor Relay and A/C Condenser Fan Relay" in Section 6E. Is main relay in good condition?	"BLU" wire is open circuit or high resistance circuit.	Replace main relay.

[A] Fig. 1 for Step 3 / [B] Fig. 2 for Step 7

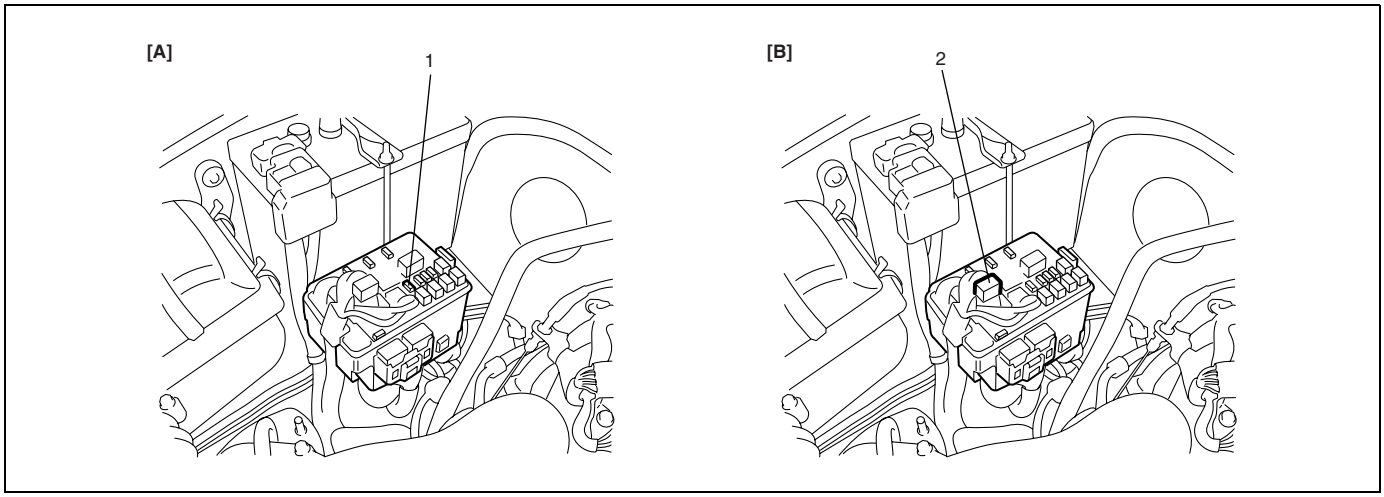

DTC P0105 (DTC No.11) Manifold Absolute Pressure (MAP) Circuit Malfunction

Wiring Diagram

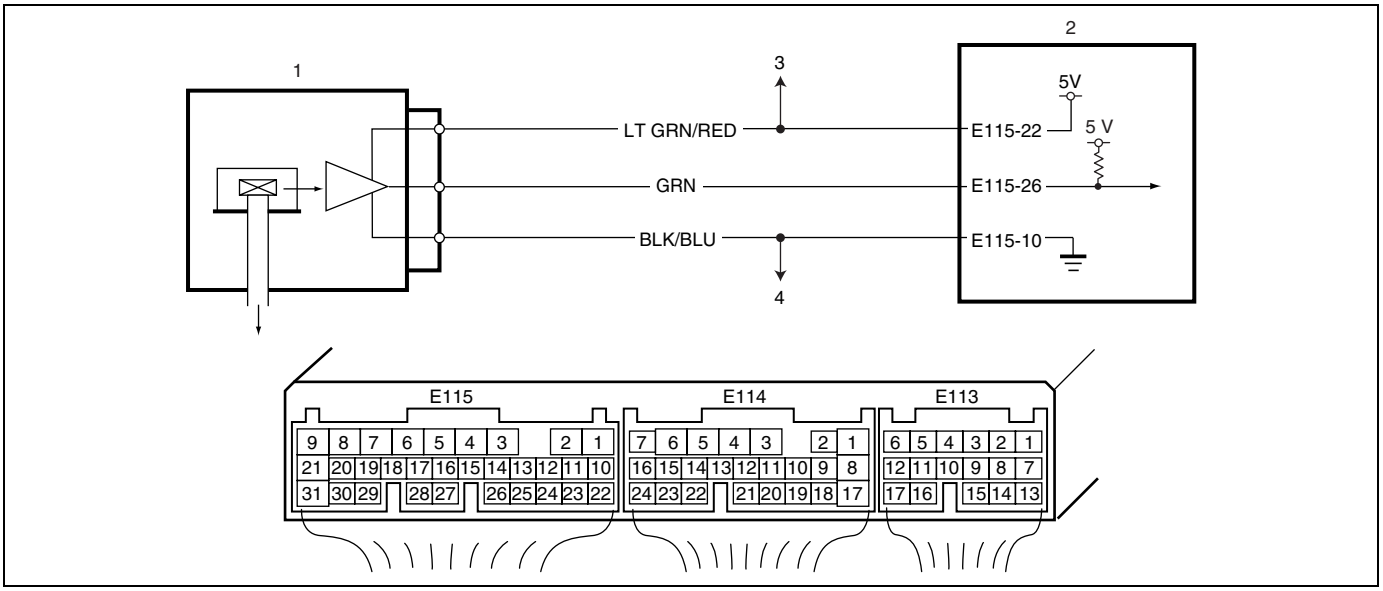

1. MAP sensor	3. To TP sensor and CO adjust resistor (if equipped)
2. ECM	4. To other sensor

DTC DETECTING CONDITION	POSSIBLE CAUSE
• MAP sensor signal is 0.19 V or lower. (Low pressure – High vacuums – Low voltage) • MAP sensor signal is 4.5 V or higher. (High pressure – Low vacuums – High voltage)	• "BLK/BLU" circuit open • "LT GRN/RED" circuit open or shorted to ground • "GRN" circuit open or shorted to ground • MAP sensor malfunction • ECM malfunction

NOTE:

- **When DTC P0120 (No.13) is indicated together, it is possible that "LT GRN/RED" circuit is open.**
- **When DTC P0105 (No.11), P0110 (No.18), P0115 (No.19) and P0120 (No.13) are indicated together, it is possible that "BLK/BLU" circuit open.**

DTC Confirmation Procedure

1) Clear DTC, start engine and keep it at idle for 1 min.
2) Select "DTC" mode on scan tool and check DTC.

Troubleshooting

Step	Action	Yes	No
1	Was "Engine and Emission Control System Check" performed?	Go to Step 2.	Go to "Engine and Emission Control System Check".

Step	Action	Yes	No
2	Check MAP sensor and its circuit. 1) Connect scan tool to DLC with ignition switch OFF. See Fig. 1. 2) Turn ignition switch ON. 3) Check intake manifold pressure. Is it 126 kPa (37.2 in.Hg) or 0 kPa (0 in.Hg)?	Go to Step 3.	Intermittent trouble. Check for intermittent referring to “Intermittent and Poor Connection” in Section 0A.
3	Check wire harness. 1) Disconnect MAP sensor connector with ignition switch OFF. 2) Check for proper connection of MAP sensor at “GRN” and “BLK/BLU” wire terminals. 3) If OK, then with ignition switch ON, check voltage at each of “LT GRN/RED” and “GRN” wire terminals and body ground. See Fig. 2. Is voltage about 4 – 6 V at each terminal?	Go to Step 4.	“LT GRN/RED” wire open or shorted to ground circuit or shorted to power circuit (See NOTE), “GRN” wire open or shorted to ground, poor E115-26 connection or E115-22 connection. If wire and connection are OK, confirm that MAP sensor is normal and then substitute a known-good ECM and recheck.
4	Check MAP sensor referring to “Manifold Absolute Pressure Sensor (MAP Sensor)” in Section 6E. Is it in good condition?	“LT GRN/RED” wire shorted to “GRN” wire, “BLK/BLU” wire open, poor E115-10 connection. If wire and connection are OK, substitute a known-good ECM and recheck.	Replace MAP sensor.

NOTE:

When battery voltage is applied to “LT GRN/RED” wire, it is possible that MAP sensor is also faulty.

[A] Fig. 1 for Step 2 / [B] Fig. 2 for Step 3

[A]

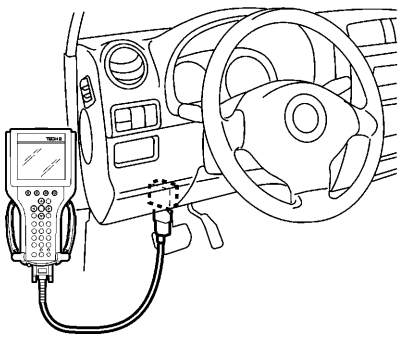

[B]

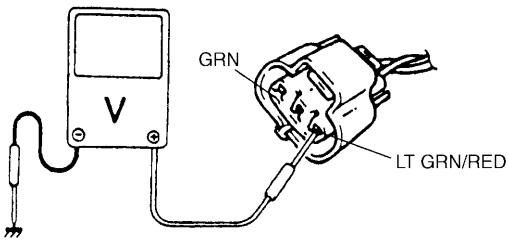

DTC P0110 (DTC No.18) Intake Air Temp. (IAT) Circuit Malfunction

Wiring Diagram

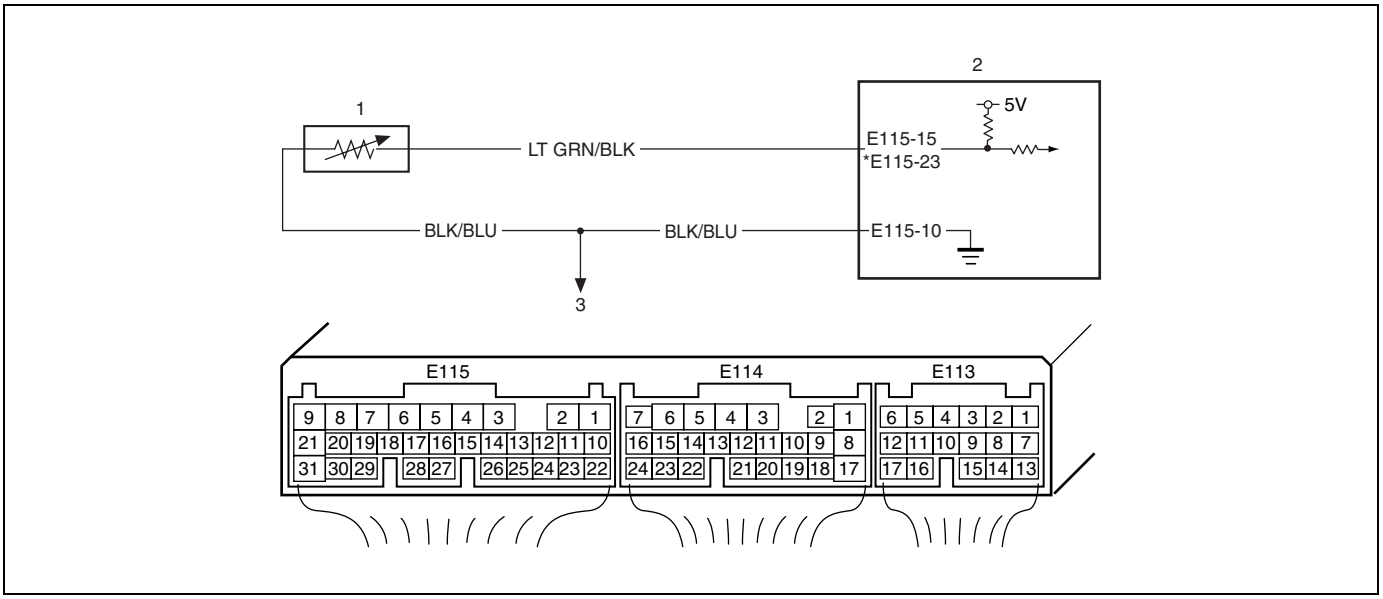

1. IAT sensor	3. To other sensor
2. ECM	*: Vehicle equipped with immobilizer control system

DTC DETECTING CONDITION	POSSIBLE CAUSE
• Low intake air temperature (High voltage-High resistance) • High intake air temperature (Low voltage-Low resistance)	• "LT GRN/BLK" circuit open or shorted to power. • "BLK/BLU" circuit open • IAT sensor malfunction • ECM malfunction

NOTE:

- **When DTC P0105 (No.11), P0110 (No.18), P0115 (No.19) and P0120 (No.13) are indicated together, it is possible that "BLK/BLU" circuit is open.**
- **Before inspecting, be sure to check that ambient temperature is higher than –40 °C (–40 °F).**

DTC Confirmation Procedure

1) Clear DTC, start engine and keep it at idle for 1 min.
2) Select "DTC" mode on scan tool and check DTC.

Troubleshooting

Step	Action	Yes	No
1	Was "Engine and Emission Control System Check" performed?	Go to Step 2.	Go to "Engine and Emission Control System Check".

Step	Action	Yes	No
2	Check IAT sensor and its circuit. 1) Connect scan tool to DLC with ignition switch OFF. See Fig. 1. 2) Turn ignition switch ON. 3) Check intake air temp. displayed on scan tool. Is –40 °C (–40 °F) or 119 °C (246 °F) indicated?	Go to Step 3.	Intermittent trouble. Check for intermittent referring to “Intermittent and Poor Connection” in Section 0A.
3	Does scan tool indicate –40 °C (–40 °F) at Step 2.	Go to Step 4.	Go to Step 6.
4	Check wire harness. 1) Disconnect IAT sensor connector with ignition switch OFF. 2) Check for proper connection to IAT sensor at “LT GRN/BLK” and “BLK/BLU” wire terminals. 3) If OK, then with ignition switch ON. Is voltage applied to “LT GRN/BLK” wire terminal about 4 – 6 V? See Fig. 2.	Go to Step 5.	“LT GRN/BLK” wire open or shorted to power, or poor E115-15 (E115-23) connection. If wire and connection are OK, substitute a known-good ECM and recheck.
5	Check wire harness. 1) Measure resistance between “BLK/BLU” wire terminal of IAT sensor connector and body ground. Is resistance continuity?	Replace IAT sensor.	“BLK/BLU” wire open or poor E115-10 connection. If wire and connection are OK, substitute a known-good ECM and recheck.
6	Check wire harness. 1) Disconnect IAT sensor connector with ignition switch OFF. 2) Measure resistance between “LT GRN/BLK” wire terminal of IAT sensor connector and body ground. Is resistance infinity? See Fig. 3.	Replace IAT sensor.	“LT GRN/BLK” wire is shorted to ground. If wire is OK, substitute a known-good ECM and recheck.

[A] Fig. 1 for Step 2 / [B] Fig. 2 for Step 4 / [C] Fig. 3 for Step 6

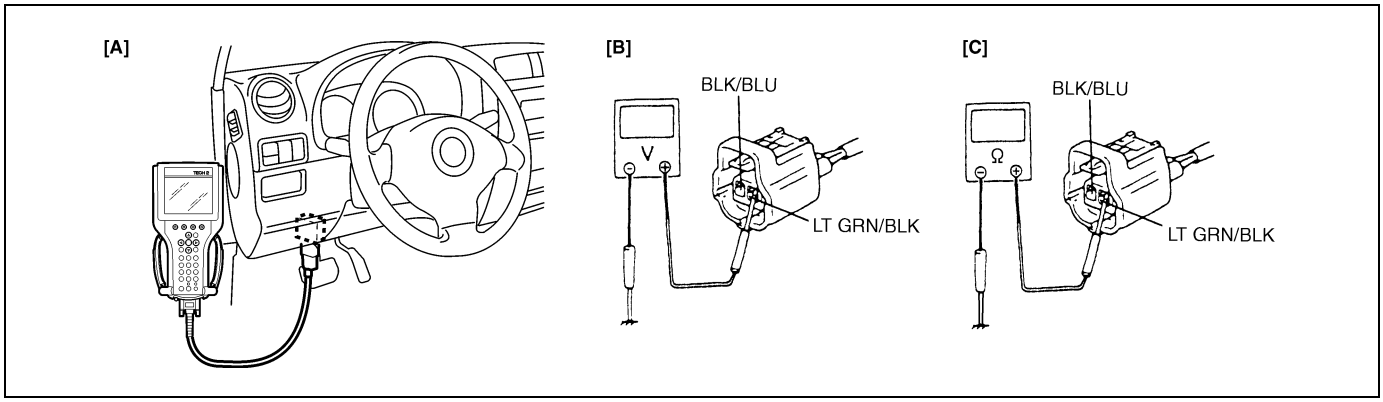

DTC P0115 (DTC No.19) Engine Coolant Temperature (ECT) Circuit Malfunction

Wiring Diagram

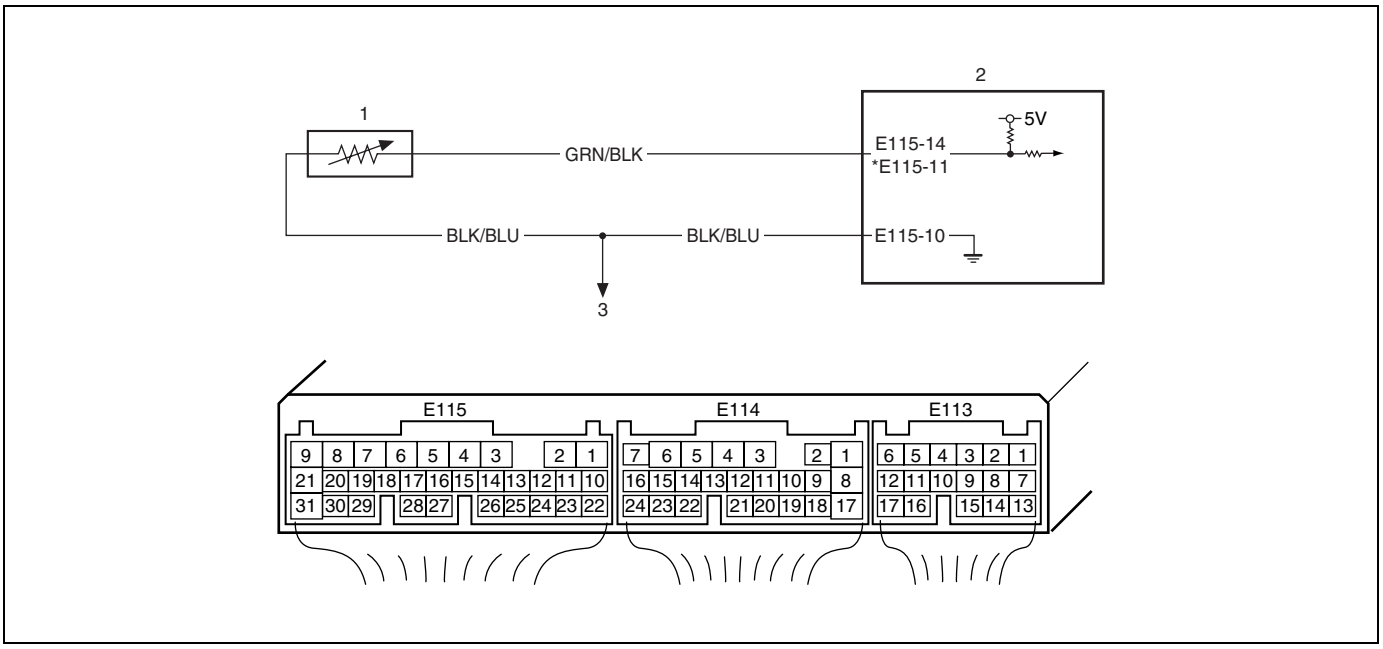

1. ECT sensor	3. To other sensor
2. ECM	*: Vehicle equipped with immobilizer control system

DTC DETECTING CONDITION	POSSIBLE CAUSE
• Low engine coolant temperature (High voltage-High resistance) • High engine coolant temperature (Low voltage-Low resistance)	• "GRN/BLK" circuit open or shorted to power • "BLK/BLU" circuit open • ECT sensor malfunction • ECM malfunction

NOTE:

- **When DTC P0105 (No.11), P0110 (No.18), P0115 (No.19) and P0120 (No.13) are indicated together, it is possible that "BLK/BLU" circuit is open.**
- **Before inspecting, be sure to check that coolant temp. meter in combination meter indicates normal operating temperature (Engine is not overheating).**
- **When this DTC and P1705 are stored together, also clear DTC stored in TCM after completion of repair.**

DTC Confirmation Procedure

1) Clear DTC, start engine and keep it at idle for 1 min.
2) Select "DTC" mode on scan tool and check DTC.

Troubleshooting

Step	Action	Yes	No
1	Was “Engine and Emission Control System Check” performed?	Go to Step 2.	Go to “Engine and Emission Control System Check”.
2	Check ECT sensor and its circuit. 1) Connect scan tool with ignition switch OFF. See Fig. 1. 2) Turn ignition switch ON. 3) Check engine coolant temp. displayed on scan tool. Is –40 °C (–40 °F) or 119 °C (246 °F) indicated?	Go to Step 3.	Intermittent trouble. Check for intermittent referring to “Intermittent and Poor Connection” in Section 0A.
3	Does scan tool indicate –40 °C (–40 °F) at Step 2.	Go to Step 4.	Go to Step 6.
4	Check wire harness. 1) Disconnect ECT sensor connector with ignition switch OFF. 2) Check for proper connection to ECT sensor at “GRN/BLK” and “BLK/BLU” wire terminals. 3) If OK, then with ignition switch ON. Is voltage applied to “GRN/BLK” wire terminal about 4 – 6 V? See Fig. 2.	Go to Step 5.	“GRN/BLK” wire open or shorted to power, or poor E115-14 (E115-11) connection. If wire and connection are OK, substitute a known-good ECM and recheck.
5	Check wire harness. 1) Measure resistance between “BLK/BLU” wire terminal of ECT sensor connector and body ground. Is resistance continuity?	Replace ECT sensor.	“BLK/BLU” wire open or poor E115-10 connection. If wire and connection are OK, substitute a known-good ECM and recheck.
6	Check wire harness. 1) Disconnect ECT sensor connector with ignition switch OFF. 2) Measure resistance between “GRN/BLK” wire terminal of ECT sensor connector and body ground. Is resistance infinity? See Fig. 3.	Replace ECT sensor.	“GRN/BLK” wire is shorted to ground. If wire is OK, substitute a known-good ECM and recheck.

[A] Fig. 1 for Step 2 / [B] Fig. 2 for Step 4 / [C] Fig. 3 for Step 6

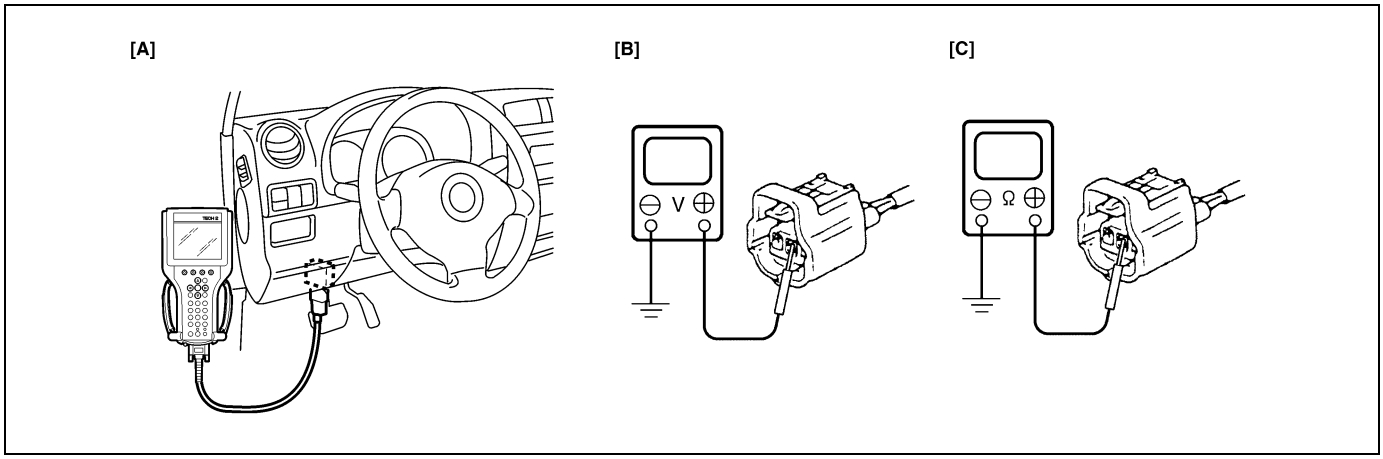

DTC P0120 (DTC No.13) Throttle Position Circuit Malfunction

Wiring Diagram

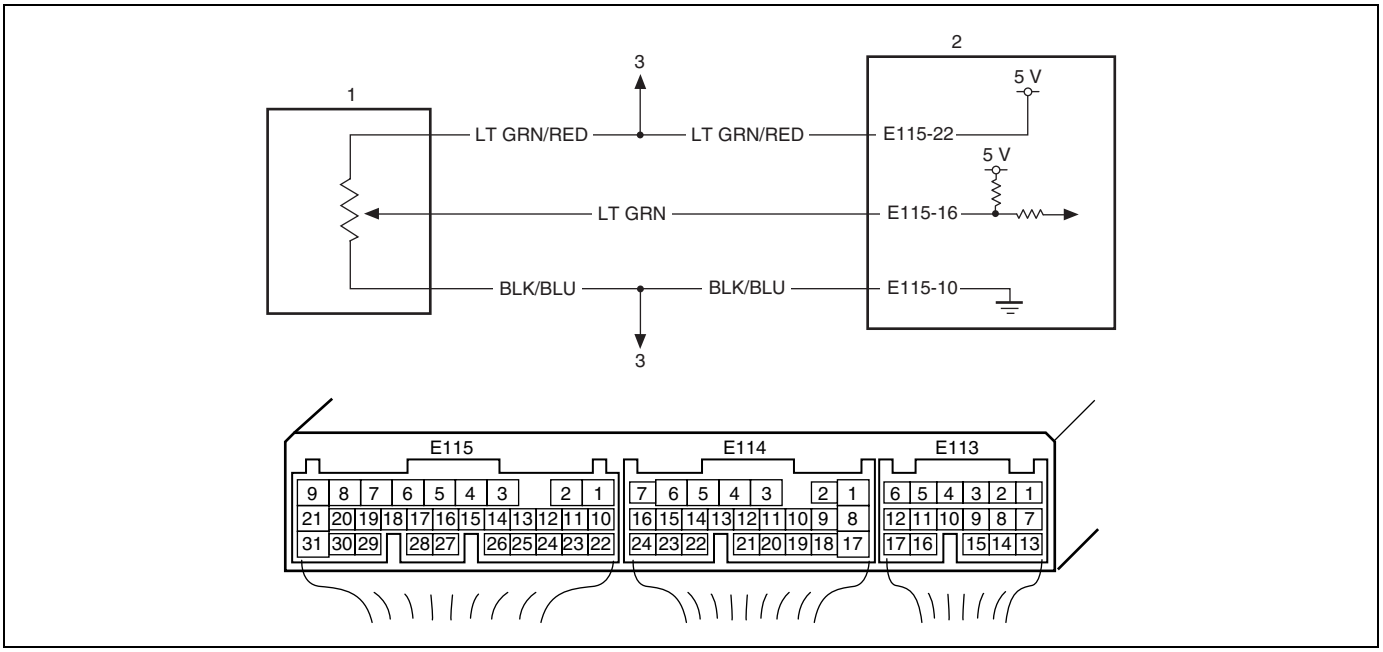

1. TP sensor	3. To other sensor
2. ECM	

DTC DETECTING CONDITION	POSSIBLE CAUSE
• Signal voltage high • Signal voltage low	• "BLK/BLU" circuit open • "LT GRN" circuit open or shorted to ground • "LT GRN/RED" circuit open or shorted to power or ground • TP sensor malfunction • ECM malfunction

NOTE:

- **When DTC P0105 (No.11), P0110 (No.18), P0115 (No.19) and P0120 (No.13) are indicated together, it is possible that "BLK/BLU" or "LT GRN/RED" circuit is open.**
- **When this DTC and P1724 or P1725 are stored together, also clear DTC stored in TCM after completion of repair.**

DTC Confirmation Procedure

1) Clear DTC, start engine and keep it at idle for 1 min.
2) Select "DTC" mode on scan tool and check DTC.

Troubleshooting

Step	Action	Yes	No
1	Was “Engine and Emission Control System Check” performed?	Go to Step 2.	Go to “Engine and Emission Control system Check”.
2	Check TP sensor and its circuit. 1) Connect scan tool to DLC with ignition switch OFF and then turn ignition switch ON. See Fig. 1. 2) Check throttle valve opening percentage displayed on scan tool. Is it displayed 0% or 100%?	Go to Step 3.	Intermittent trouble. Check for intermittent referring to “Intermittent and Poor Connection” in Section 0A.
3	Check wire harness. 1) Disconnect connector from TP sensor with ignition switch OFF. 2) Check for proper connection to TP sensor at “LT GRN/RED”, “LT GRN” and “BLK/BLU” wire terminal. 3) If OK, then with ignition switch ON, check voltage at each of “LT GRN/RED” and “LT GRN” wire terminals and body ground. See Fig. 2. Is voltage about 4 – 6 V at each terminal?	Go to Step 4.	“LT GRN/RED” wire open, “LT GRN/RED” wire shorted to ground circuit or power circuit or “BLK/BLU” wire, “LT GRN” wire open or shorted to ground circuit or poor E115-22 or E115-16 connection. If wire and connection are OK, substitute a known-good ECM and recheck.
4	Check TP sensor. 1) Check TP sensor resistance referring to “Throttle Position Sensor (TP Sensor)” in Section 6E. Are measured values within specifications?	“BLK/BLU” wire open or poor E115-10 connection. If wire and connection are OK, substitute a known-good ECM and recheck.	Replace TP sensor.

[A] Fig. 1 for Step 2 / [B] Fig. 2 for Step 3

[A]

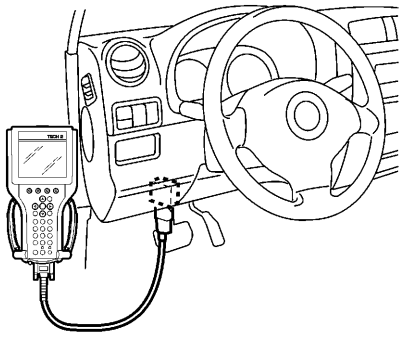

[B]

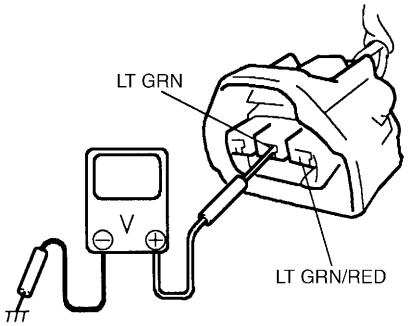

DTC P0130 (DTC No.14) Heated Oxygen Sensor (HO2S) Circuit Malfunction

Wiring Diagram

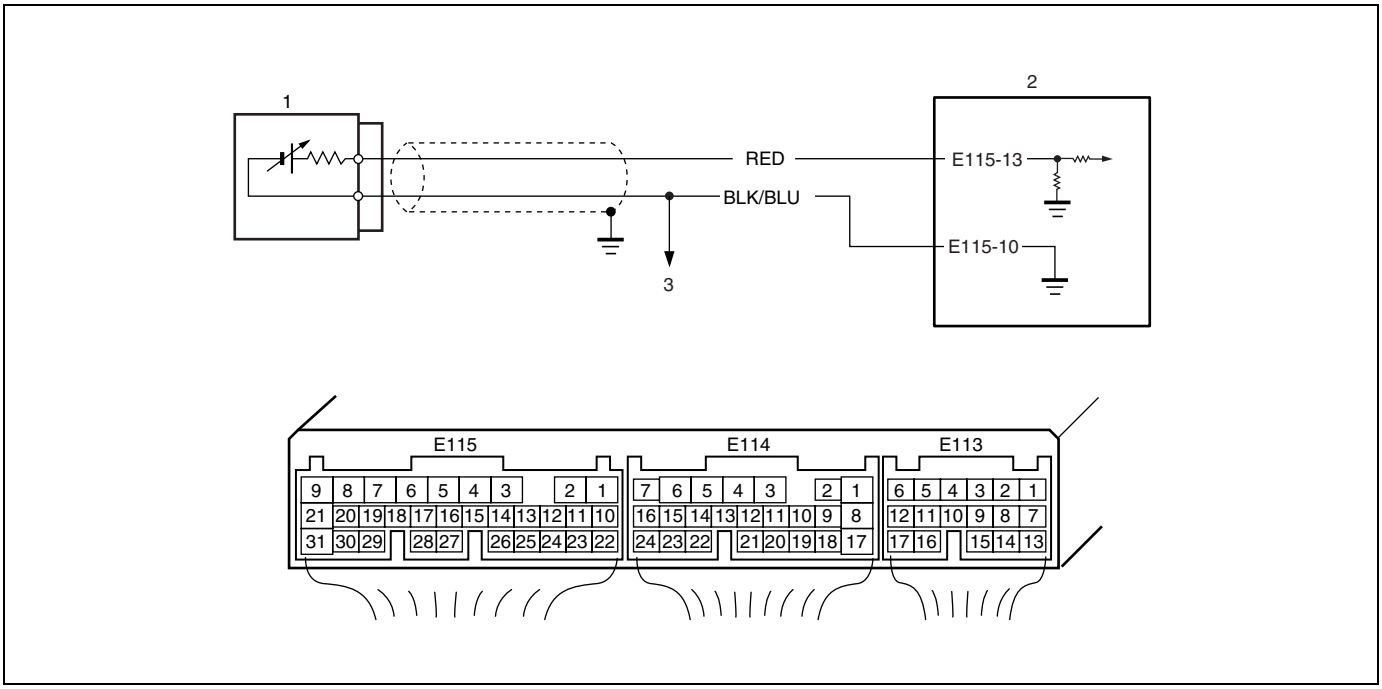

1. Heated oxygen sensor (HO2S)	2. ECM	3. To other sensor

DTC DETECTING CONDITION	POSSIBLE CAUSE
• When running at idle speed after engine warmed up and running at specified vehicle speed, HO2S output voltage does not go below 0.3 V or over 0.6 V.	• Heated oxygen sensor malfunction • "BLK/BLU" or "RED" circuit open (poor connection) or short

DTC Confirmation Procedure

WARNING:
- **When performing a road test, select a place where there is no traffic or possibility of a traffic accident and be very careful during testing to avoid occurrence of an accident.**
- **Road test should be carried out with 2 persons, a driver and a tester.**

1) Turn ignition switch OFF. Clear DTC with ignition switch ON, check vehicle and environmental condition for:
   – Altitude (barometric pressure): 2400 m, 8000 ft or less (560 mmHg, 75 kPa or more)
   – Ambient temp.: –10 °C, 14 °F or higher
   – Intake air temp.: 70 °C, 158 °F or lower
2) Warm up engine to normal operating temperature.
3) Drive vehicle at 30 – 40 mph, 50 – 60 km/h for 2 min.
4) Stop vehicle and run engine at idle for 2 min.
5) Select "DTC" mode on scan tool and check DTC.

Troubleshooting

Step	Action	Yes	No
1	Was “Engine and Emission Control system Check” performed?	Go to Step 2.	Go to “Engine and Emission Control System Check”.
2	Is there DTC(s) other than HO2S (DTC P0130)?	Go to applicable DTC Diag. Flow Table.	Go to Step 3.
3	Check HO2S signal. 1) Connect scan tool to DLC with ignition switch OFF. See Fig. 1. 2) Warm up engine to normal operating temperature and keep it at 2000 r/min. for 60 sec. 3) Repeat racing engine (Repeat depressing accelerator pedal 5 to 6 times continuously and take foot off from pedal to enrich and enlean A/F mixture). See Fig. 2. Does HO2S output voltage deflect between 0.3 V and over 0.6 V repeatedly?	Intermittent trouble. Check for intermittent referring to “Intermittent and Poor Connection” in Section 0A.	Check “RED” and “BLK/BLU” wires for open and short, and connections for poor connection. If wires and connections are OK, replace HO2S.

[A] Fig. 1 for Step 3 / [B] Fig. 2 for Step 3

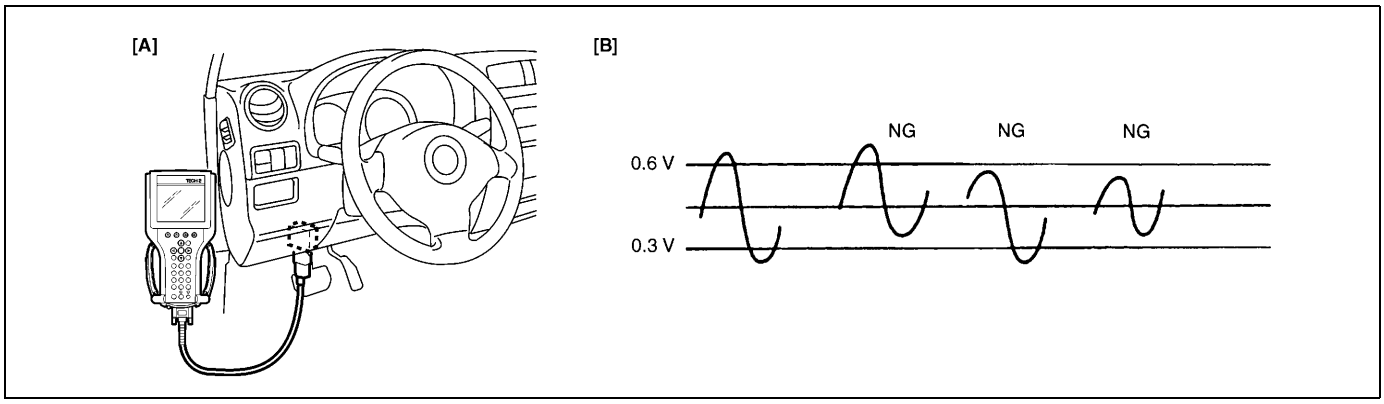

DTC P0135 (DTC No.14) Heated Oxygen Sensor (HO2S) Heater Circuit Malfunction

Wiring Diagram

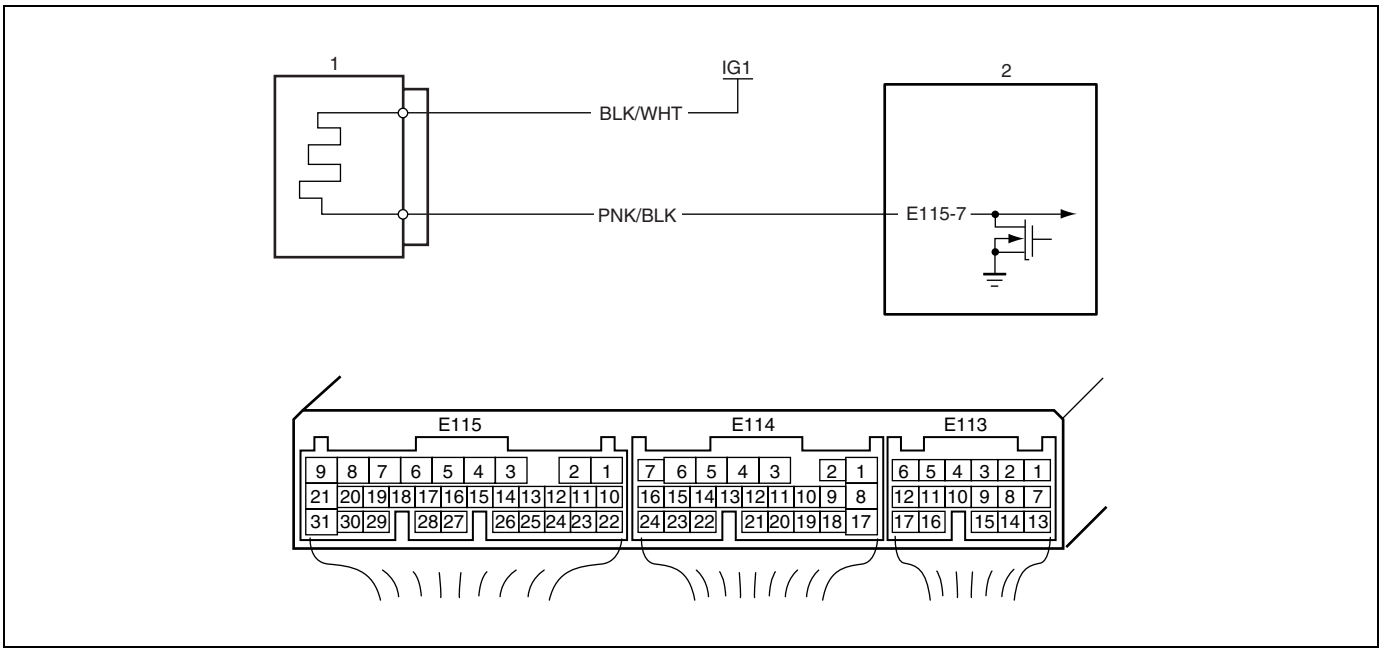

1. Heated oxygen sensor (HO2S) heater	2. ECM

DTC DETECTING CONDITION	POSSIBLE CAUSE
DTC will set when A or B condition is met. A: • Low voltage at terminal E115-7 when engine is running at high load. B: • High voltage at terminal E115-7 when engine is running under condition other than above.	• HO2S heater circuit open or shorted to ground • ECM malfunction

DTC Confirmation Procedure

WARNING:
- **When performing a road test, select a place where there is no traffic or possibility of a traffic accident and be very careful during testing to avoid occurrence of an accident.**
- **Road test should be carried out with 2 persons, a driver and a tester.**

1) Turn ignition switch OFF.
2) Clear DTC with ignition switch ON, start engine and keep it at idle for 1 min.
3) Start vehicle and depress accelerator pedal fully for 5 sec. or longer.
4) Stop vehicle.
5) Select “DTC” mode on scan tool and check DTC.

Troubleshooting

Step	Action	Yes	No
1	Was “Engine and Emission Control System Check” performed?	Go to Step 2.	Go to “Engine and Emission Control System Check”.
2	Check heater for operation. 1) Check voltage at terminal E115-7. See Fig. 1. 2) Warm up engine to normal operating temperature. 3) Stop engine. 4) Turn ignition switch ON and Check voltage at terminal E115-7. See Fig. 1. Voltage should be over 10 V. 5) Using oscilloscope, check heater signal referring to “Reference waveform No.14” under “Inspection of ECM and Its Circuits” in this section. Is duty pulse outputted as reference waveform No.14 at E115-7 of ECM terminal?	Intermittent trouble Check for intermittent referring to “Intermittent and Poor Connection” in Section 0A.	Go to Step 3.
3	Check heater of sensor. 1) Disconnect HO2S coupler with ignition switch OFF. 2) Check for proper connection to HO2S at “BLK/WHT” and “PNK/BLK” wire terminals. 3) If OK, then check heater resistance. See Fig. 2. Is it 5 – 6.4 Ω at 20 °C, 68 °F?	“PNK/BLK” wire open or shorted to ground or poor connection at E115-7. If wire and connection are OK, substitute a known-good ECM and recheck.	Replace HO2S.

[A] Fig. 1 for Step 2 / [B] Fig. 2 for Step 3

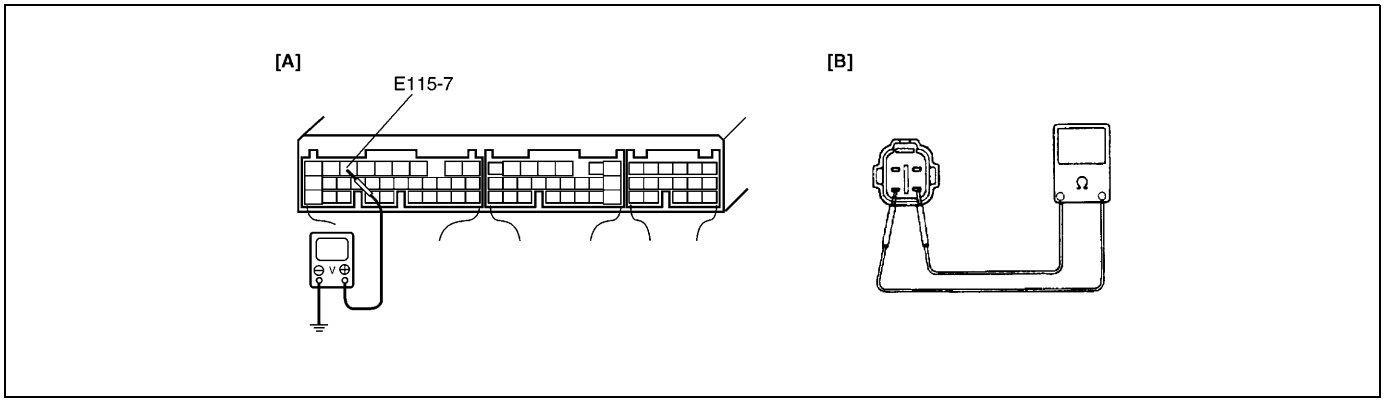

DTC P0325 (DTC No.17) Knock Sensor Circuit Malfunction

Wiring Diagram

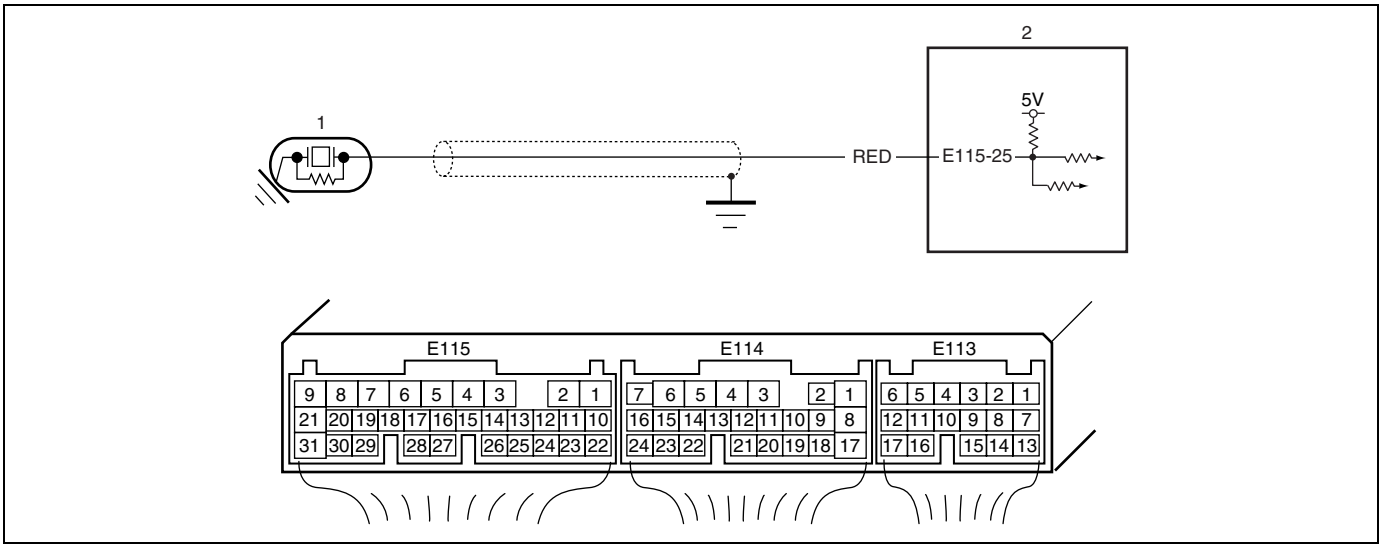

1. Knock sensor	2. ECM

DTC DETECTING CONDITION	POSSIBLE CAUSE
• Knock sensor voltage is 3.91 V or more • Knock sensor voltage is 1.23 V or less	• "RED" circuit open or shorted to ground • Knock sensor malfunction • ECM malfunction

DTC Confirmation Procedure

1) Clear DTC, start engine and keep it at idle for 1 min.
2) Select "DTC" mode on scan tool and check DTC.

Troubleshooting

Step	Action	Yes	No
1	Was "Engine and Emission Control System Check" performed?	Go to Step 2.	Go to "Engine and Emission Control System Check".
2	Check knock sensor signal. 1) With engine running, check voltage from "E115-25" terminal of ECM connector to body ground. See Fig. 1. Is voltage within 1.23 – 3.91 V?	Intermittent trouble or faulty ECM. Check for intermittent referring to "Intermittent and Poor Connector" in Section 0A.	Go to Step 3.
3	Check knock sensor output. 1) Stop engine. 2) With ignition switch at OFF position, disconnect knock sensor connector. 3) With ignition switch at ON position, check voltage from "RED" wire terminal to body ground of knock sensor connector. See Fig. 2. Is it 4 – 5 V?	Faulty knock sensor. Substitute a known-good knock sensor and recheck.	"RED" wire open, shorted to ground circuit or poor "E115-25" connection. If wire and connection are OK, substitute a known-good ECM and recheck.

[A] Fig. 1 for Step 2 / [B] Fig. 2 for Step 3

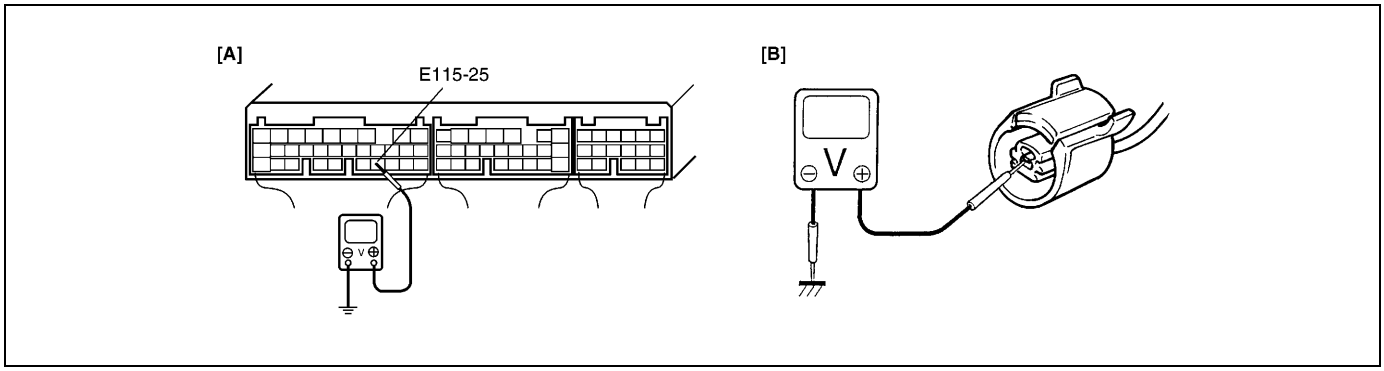

DTC P0335 (DTC No.23) Crankshaft Position (CKP) Sensor Circuit Malfunction

Wiring Diagram

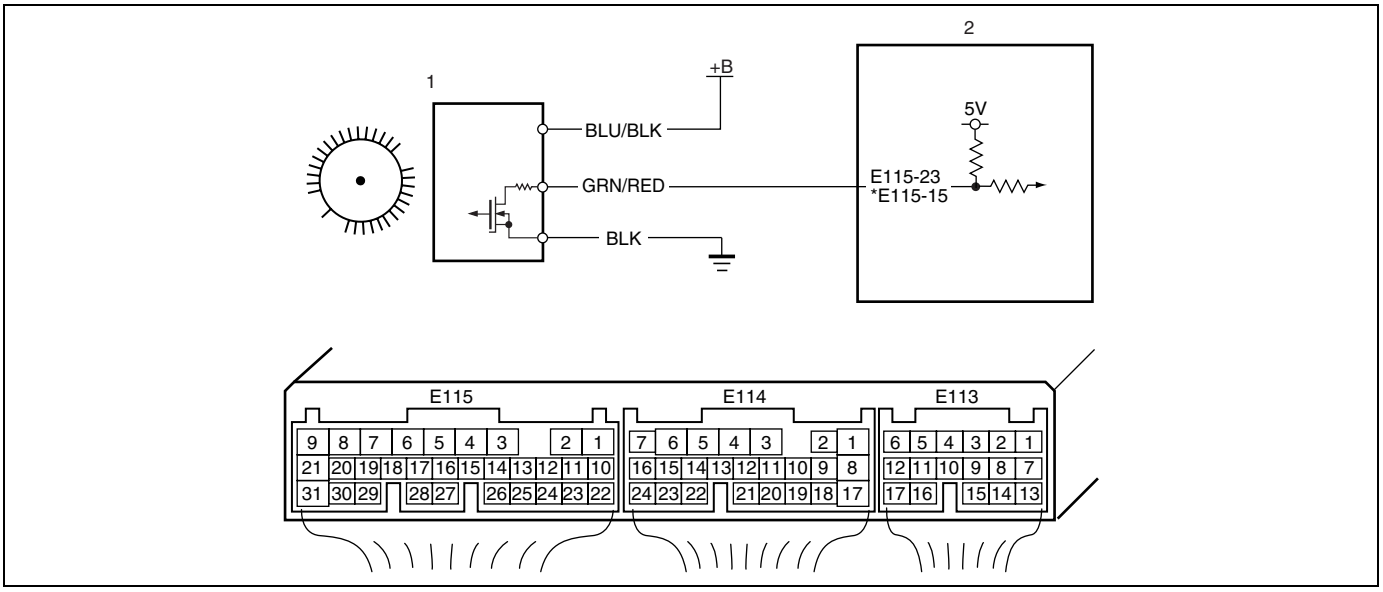

1. CKP sensor	*: Vehicle equipped with immobilizer control system
2. ECM	

DTC DETECTING CONDITION	POSSIBLE CAUSE
• No CKP sensor signal for 2 seconds at engine cranking.	• CKP sensor circuit open or short. • Signal teeth damaged. • CKP sensor malfunction, foreign material being attached or improper installation. • ECM malfunction.

Reference

Connect oscilloscope between E115-23 (E115-15) and E115-1 terminals of ECM connector connected to ECM and check CKP sensor signal referring to “Reference waveform No.11” and “Reference waveform No.12” under “Inspection of ECM and Its Circuits” in this section.

DTC Confirmation Procedure

1) Clear DTC and crank engine for 2 sec.
2) Select “DTC” mode on scan tool and check DTC.

Troubleshooting

Step	Action	Yes	No
1	Was “Engine and Emission Control System Check” performed?	Go to Step 2.	Go to “Engine and Emission Control System Check”.
2	Check CKP sensor and connector for proper installation. Is CKP sensor installed properly and connector connected securely?	Go to Step 3.	Correct.
3	Check wire harness and connection. 1) Disconnect connector from CKP sensor. 2) Check for proper connection to CKP sensor at each terminal. 3) If OK, turn ignition switch ON and check for voltage at each terminal of sensor connector disconnected. See Fig. 1. Terminal “B+”: 10 – 14 V Terminal “Vout”: 4 – 5 V Terminal “GND”: 0 V Is check result satisfactory?	Go to Step 5.	Go to Step 4.
4	Was terminal “Vout” voltage out of specification in Step 3 check?	“GRN/RED” wire open, short or poor connection. If wire and connection are OK, substitute a known-good ECM and recheck.	“BLU/BLK” or “BLK” wire open, short or poor connection.
5	Check ground circuit for open. 1) Turn ignition switch OFF. 2) Check for continuity between “GND” terminal of CKP sensor connector and engine ground. Is continuity indicated?	Go to Step 6.	“BLK” wire open or poor ground connection.
6	Check CKP sensor and signal rotor referring to “Crankshaft Position Sensor” in Section 6E. Is it in good condition?	Substitute a known-good ECM and recheck.	Clean or replace rotor teeth or replace CKP sensor.

Fig. 1 for Step 3

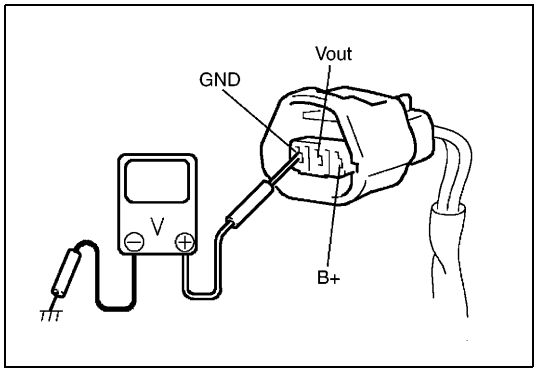

DTC P0340 (DTC No.15) Camshaft Position (CMP) Sensor Circuit Malfunction

Wiring Diagram

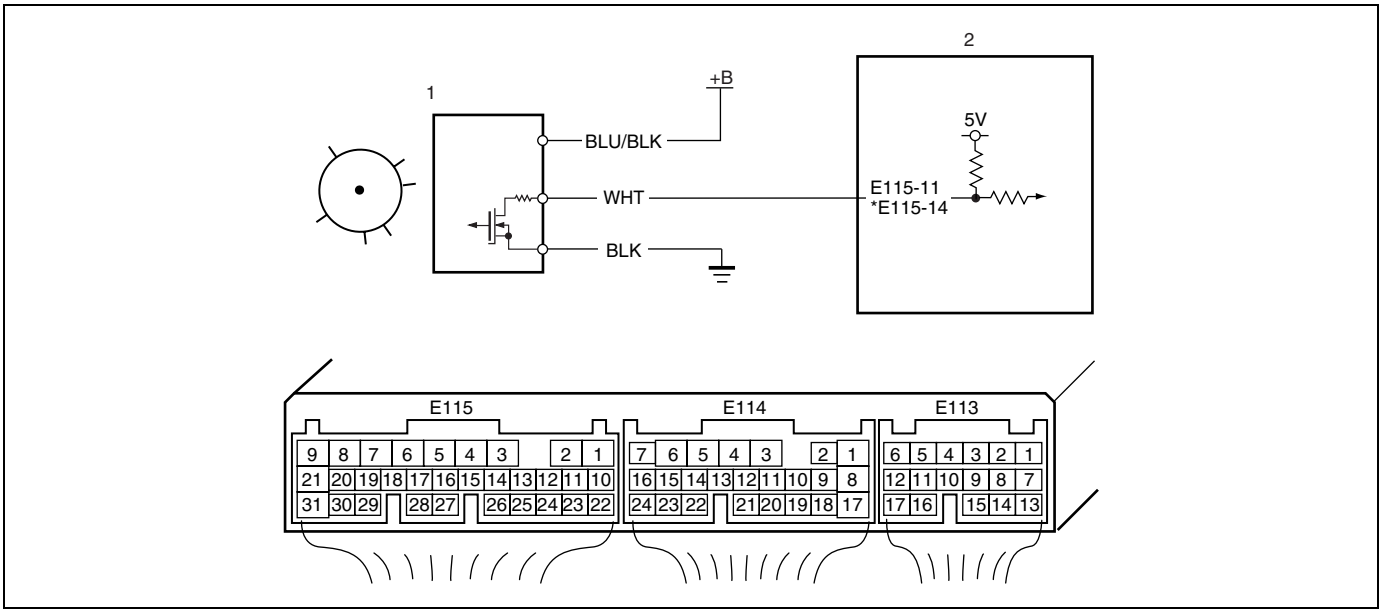

1. CKP sensor	*: Vehicle equipped with immobilizer control system
2. ECM	

DTC DETECTING CONDITION	POSSIBLE CAUSE
• The number of CMP sensor signal pulses is incorrect during 8 revolution of crankshaft.	• CMP sensor circuit open or short. • Signal rotor teeth damaged. • CMP sensor malfunction, foreign material being attached or improper installation. • ECM malfunction. • CMP sensor phase lag.

Reference

Connect oscilloscope between E115-11 (E115-14) and E115-1 terminals of ECM connector connected to ECM and check CMP sensor signal referring to “Reference waveform No.11” and “Reference waveform No.12” under “Inspection of ECM and Its Circuits” in this section.

DTC Confirmation Procedure

1) Clear DTC.
2) Start engine and keep it at idle for 1 min.
3) Select “DTC” mode on scan tool and check DTC.

Troubleshooting

Step	Action	Yes	No
1	Was “Engine and Emission Control System Check” performed?	Go to Step 2.	Go to “Engine and Emission Control System Check”.
2	Check CMP sensor and connector for proper installation. Is CMP sensor installed properly and connector connected securely?	Go to Step 3.	Correct.
3	Check wire harness and connection. 1) Disconnect connector from CMP sensor. 2) Check for proper connection to CMP sensor at each terminal. 3) If OK, turn ignition switch ON and check for voltage at each terminal of sensor connector disconnected. See Fig. 1. Terminal “B+”: 10 – 14 V Terminal “Vout”: 4 – 5 V Terminal “GND”: 0 V Is check result satisfactory?	Go to Step 5.	Go to Step 4.
4	Was terminal “Vout” voltage out of specification in Step 3 check?	“WHT” wire open, short or poor connection. If wire and connection are OK, substitute a known-good ECM and recheck.	“BLU/BLK” or “BLK” wire open, short or poor connection.
5	Check ground circuit for open. 1) Turn ignition switch OFF. 2) Check for continuity between “GND” terminal of CMP sensor connector and engine ground. Is continuity indicated?	Go to Step 6.	“BLK” wire open or poor ground connection.
6	Check CMP sensor and signal rotor referring to “Camshaft Position Sensor” in Section 6E. Is it in good condition?	Substitute a known-good ECM and recheck.	Clean or replace rotor teeth or replace CMP sensor.

Fig. 1 for Step 3

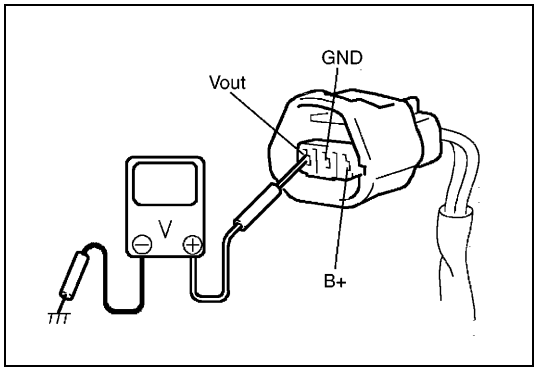

DTC P0500 (DTC No.16) Vehicle Speed Sensor (VSS) Malfunction

Wiring Diagram

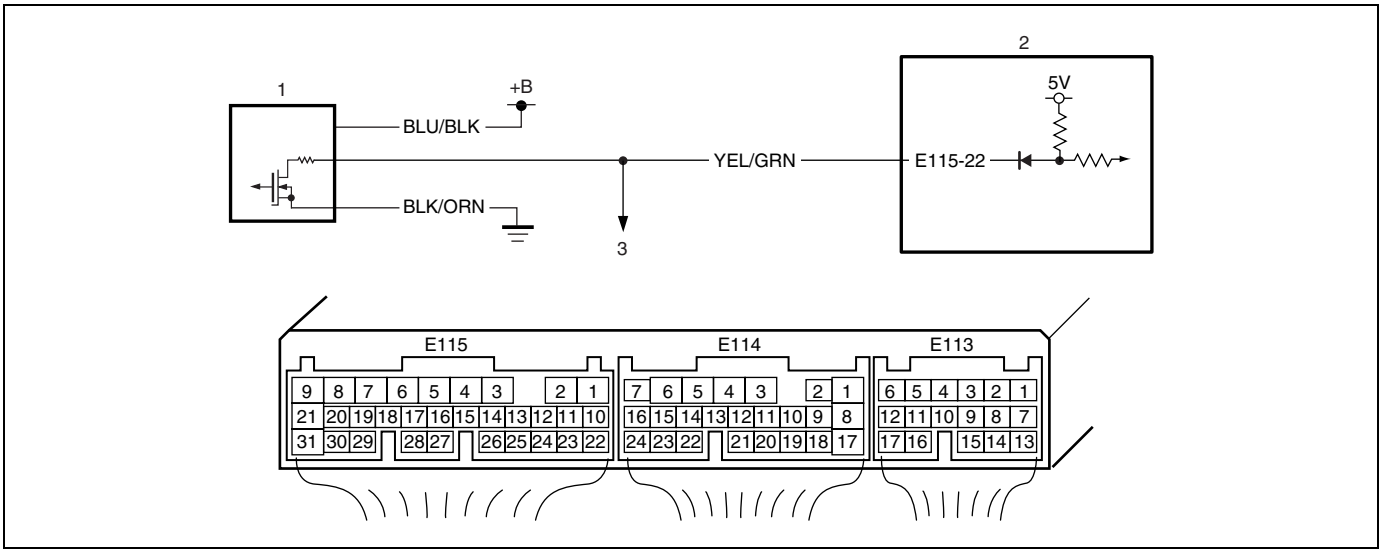

1. VSS	3. To combination meter
2. ECM	

DTC DETECTING CONDITION	POSSIBLE CAUSE
• VSS signal not inputted while vehicle running in “D” range or during fuel cut at deceleration.	• “BLK/ORN” circuit open • “YEL/GRN” or “BLU/BLK” circuit open or short • VSS malfunction • ECM malfunction • Combination meter malfunction

DTC Confirmation Procedure

WARNING:

- **When performing a road test, select a place where there is no traffic or possibility of a traffic accident and be very careful during testing to avoid occurrence of an accident.**
- **Road test should be carried out with 2 persons, a driver and a tester.**

1) Clear DTC and warm up engine to normal operating temperature.
2) Increase vehicle speed to 50 mph, 80 km/h in 3rd gear or “2” range while observing vehicle speed displayed on scan tool.
3) Release accelerator pedal and with engine brake applied, keep vehicle coasting (fuel cut condition) for 4 sec. or more.
4) Select “DTC” mode on scan tool and check DTC.

Troubleshooting

Step	Action	Yes	No
1	Was “Engine and Emission Control System Check” performed?	Go to Step 2.	Go to “Engine and Emission Control System Check”.
2	Does speedometer indicate vehicle speed?	Go to Step 3.	Go to Step 5.
3	Check vehicle speed signal. Is vehicle speed displayed on scan tool in step 2) and 3) of DTC confirmation procedure?	Intermittent trouble or faulty ECM. Check for intermittent referring to “Intermittent and Poor Connection” in Section 0A.	Go to Step 4.
4	Check VSS signal circuit. 1) Turn ignition switch to OFF position. 2) Disconnect combination meter connectors. Refer to “Combination Meter” in Section 8. 3) Turn ignition switch to ON position, without running engine. 4) Measure voltage from terminal “c” of VSS connector to ground. See Fig. 2. Is voltage within 4 – 5 V?	Faulty speedometer.	“YEL/GRN” wire open or short. Poor connection of ECM connector terminal. If OK, substitute a known-good ECM and recheck.
5	Check VSS power supply. 1) With ignition switch at OFF position, disconnect VSS connector. 2) Turn ignition switch to ON position, without running engine. 3) Measure voltage from terminal “a” to “b” of VSS connector. See Fig. 1. Is voltage within 10 – 14 V?	Go to Step 6.	“BLU/BLK” or “BLK/ORN” wire open or short.
6	Check VSS signal circuit. 1) Measure voltage from terminal “c” of VSS connector to ground. See Fig. 2. Is voltage more than 4 V?	Go to Step 7.	“YEL/GRN” wire open or short. Poor connection of ECM connector terminal. If OK, substitute a known-good ECM and recheck.
7	Check VSS and signal rotor referring to “Vehicle Speed Sensor (VSS)” in Section 6E. Is it in good condition?	Substitute a known-good ECM and recheck.	Clean or replace rotor teeth or replace VSS.

[A] Fig. 1 for Step 5 / [B] Fig. 2 for Step 4 and Step 6

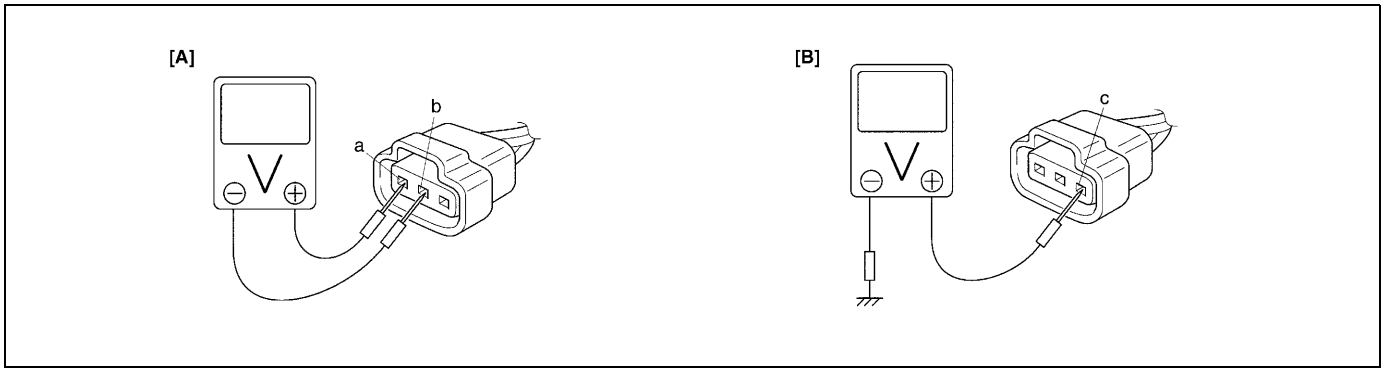

DTC P1570 (DTC No.21) ABS Signal Circuit Malfunction

Wiring Diagram

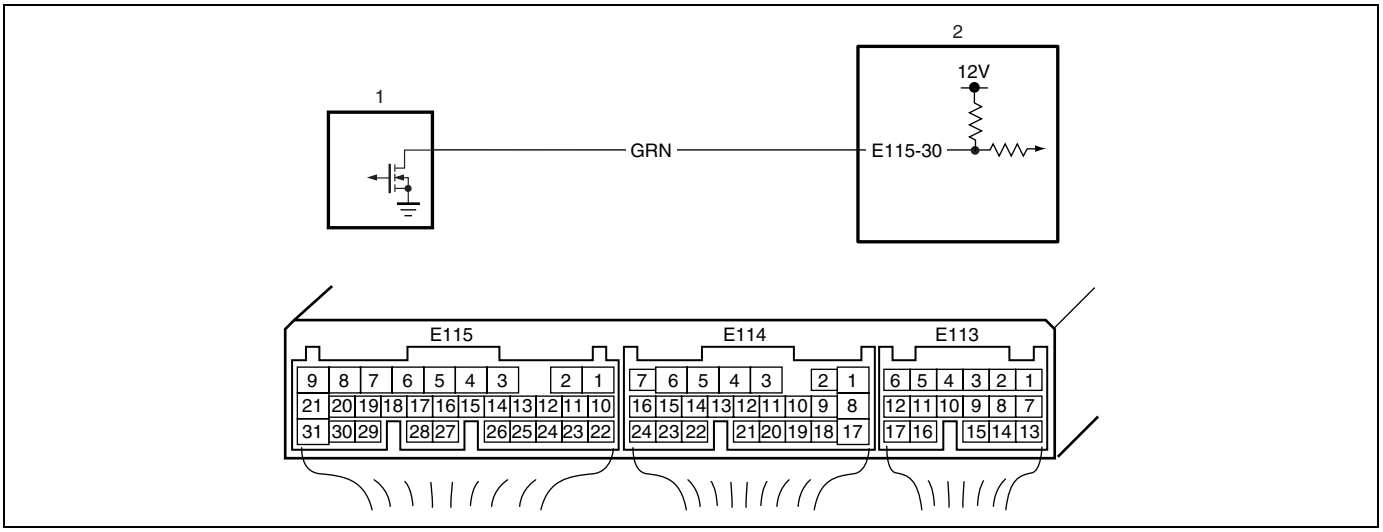

1. ABS control module	2. ECM

DTC DETECTING CONDITION	POSSIBLE CAUSE
• ABS signal input is low when engine start.	• ABS signal circuit short to ground • ABS control module

DTC Confirmation Procedure

1) Clear DTC, start engine and keep it at idle for 1 min.
2) Select “DTC” mode on scan tool and check DTC.

Troubleshooting

Step	Action	Yes	No
1	Was “Engine and Emission Control System Check” performed?	Go to Step 2.	Go to “Engine and Emission Control System Check”.
2	Signal voltage check. 1) With the ignition switch ON position, check voltage between E115-30 terminal of ECM coupler and ground. Is voltage within 10 – 14 V?	Intermittent trouble. If OK, substitute a known-good ECM and recheck.	Go to Step 3.
3	Signal circuit check. 1) Disconnect ABS control module connector with ignition switch OFF. 2) Measure resistance between “GRN” wire terminal of ABS control module connector and body ground. Is resistance infinity?	Go to Step 4.	“GRN” wire is shorted to ground.
4	DTC check. 1) Disconnect coupler of ABS control module. 2) Clear DTC. 3) Start engine and check DTC. Is DTC P1570 (No.21) detected?	Substitute a known-good ECM and recheck.	Substitute a known-good ABS control module and recheck.

Table B-1 Fuel Injector Circuit Check

Wiring Diagram

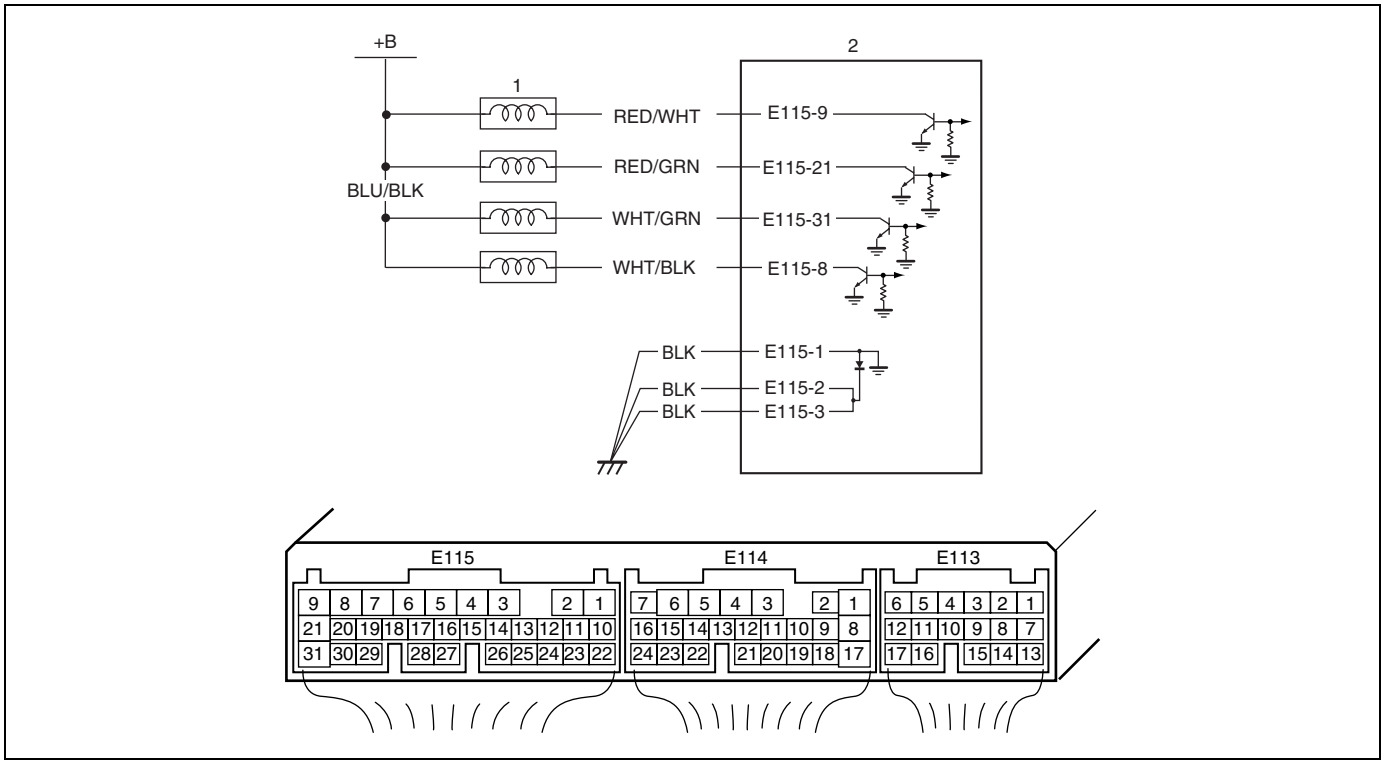

1. Fuel injector	2. ECM

Troubleshooting

Step	Action	Yes	No
1	Was “Engine and Emission Control System Check” performed?	Go to Step 2.	Go to “Engine and Emission Control System Check”.
2	Check injector for operating sound. Using sound scope, check each injector for operating sound at engine cranking. Do all 4 injector make operating sound?	Fuel injector circuit is in good condition.	Go to Step 3.
3	Dose none of 4 injectors make operating sound at Step 2?	Go to Step 4.	Check coupler connection and wire harness of injector not making operating sound and injector itself.
4	Check power circuit of injectors for open and short. Is it normal?	Check all 4 injectors for resistance respectively. If resistance is OK, substitute a known-good ECM and recheck.	Power circuit open or short.

Table B-2 Fuel Pump and Its Circuit Check

Wiring Diagram

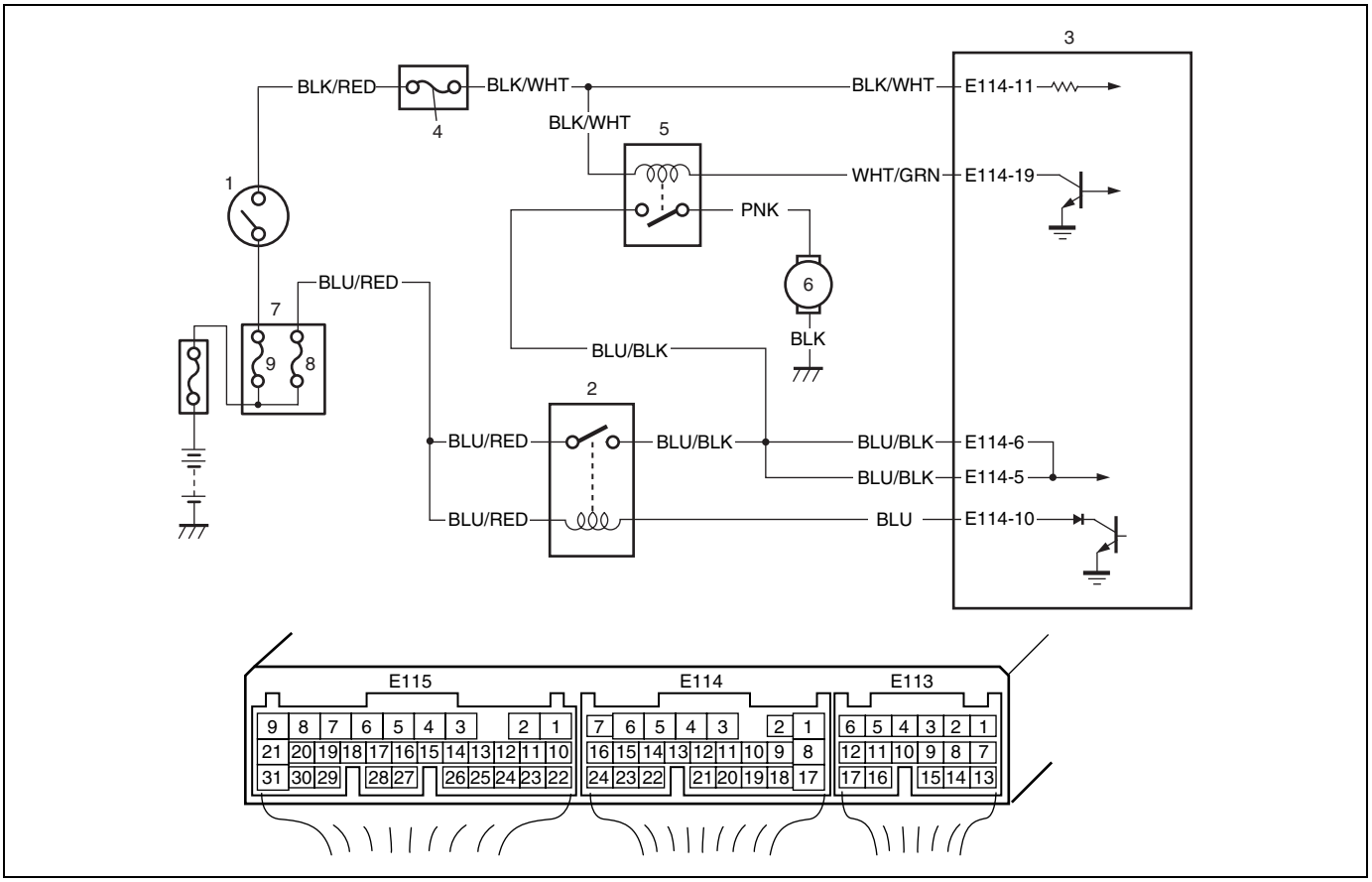

1. Ignition switch	3. ECM	5. Fuel pump relay	7. Relay box	9. "IGN1" fuse
2. Main relay	4. "IG" fuse	6. Fuel pump	8. "FI" fuse	

Troubleshooting

Step	Action	Yes	No
1	Was "Engine and Emission Control System Check" performed?	Go to Step 2.	Go to "Engine and Emission Control System Check".
2	Check fuel pump control system for operation. Is fuel pump heard to operate for 2 sec. after ignition switch ON? See Fig. 1.	Fuel pump circuit is in good condition.	Go to Step 3.
3	Check fuel pump for operation. 1) Remove fuel pump relay (1) from relay box with ignition switch OFF. 2) Check for proper connection to relay at each terminals. 3) If OK, using service wire, connect terminals "A" and "B" of relay connector. See Fig. 2 and CAUTION. Is fuel pump heard to operate at ignition switch ON?	Go to Step 4.	"PNK", "BLK" or "BLU/BLK" circuit open or fuel pump malfunction.

Step	Action	Yes	No
4	Check fuel pump relay for operation. 1) Check fuel pump relay referring to “Main Relay, Fuel Pump Relay, A/C Compressor Relay and A/C Condenser Fan Relay” in Section 6E. Is fuel pump relay in good condition?	“WHT/GRN” or “BLK/WHT” circuit open or poor E114-19 connection. If wire and connection are OK, substitute a known-good ECM and recheck.	Replace fuel pump relay.

CAUTION:

Check to make sure that connection is made between correct terminals. Wrong connection can cause damage to ECM, wire harness, etc.

[A] Fig. 1 for Step 2 / [B] Fig. 2 for Step 3

[A]

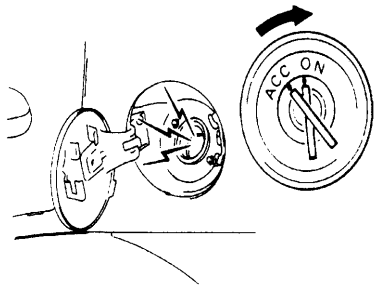

[B]

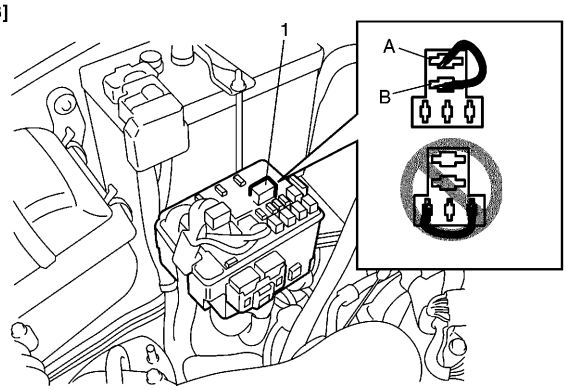

Table B-3 Fuel Pressure Check

System Diagram

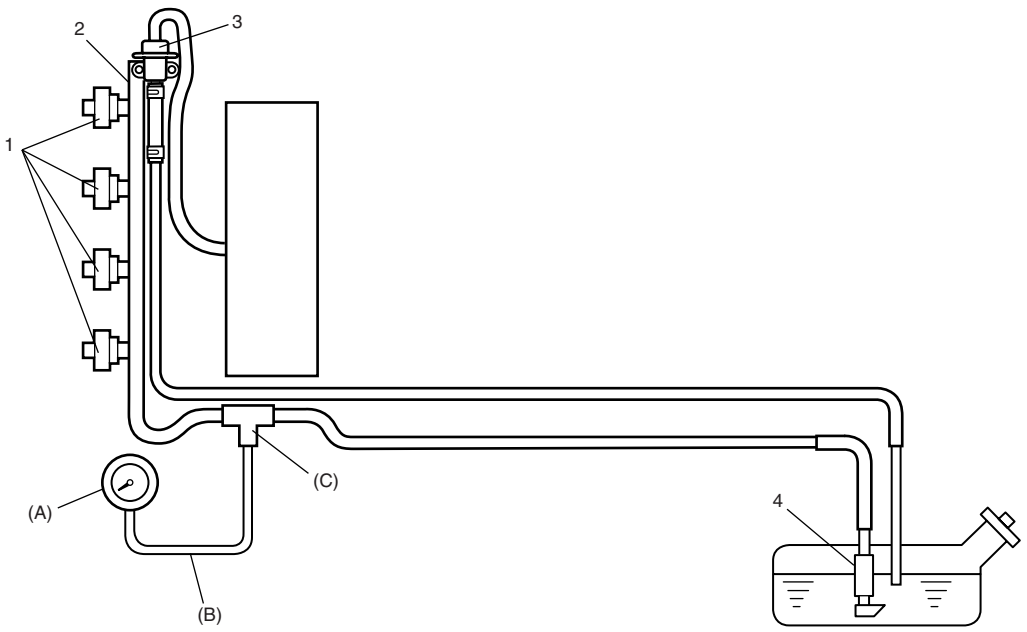

1. Injector	3. Fuel pressure regulator	(A): Fuel pressure gauge	(C): Attachment
2. Delivery pipe	4. Fuel pump	(B): Hose	

Troubleshooting

Step	Action	Yes	No
1	Check fuel pressure (Refer to Section 6E for details). 1) Release fuel pressure from fuel feed line. 2) Install fuel pressure gauge. See Fig. 1. 3) Check fuel pressure by repeating ignition switch ON and OFF. Is fuel pressure then 270 – 310 kPa (2.7 – 3.1 kg/cm^2, 38.4 – 44.0 psi)?	Go to Step 2.	Go to Step 4.
2	Is 200 kPa (2.0 kg/cm^2, 28.4 psi) or higher fuel pressure retained for 1 minute after fuel pump is stopped at Step 1?	Normal fuel pressure.	Go to Step 3.
3	Is there fuel leakage from fuel feed line hose, pipe or their joint?	Fuel leakage from hose, pipe or joint.	Faulty fuel pressure regulator.
4	Was fuel pressure higher than spec. in Step 1?	Faulty fuel pressure regulator.	Clogged fuel filter, Restricted fuel feed hose or pipe, Faulty fuel pump or Fuel leakage from hose connection in fuel tank.

Fig. 1 for Step 1

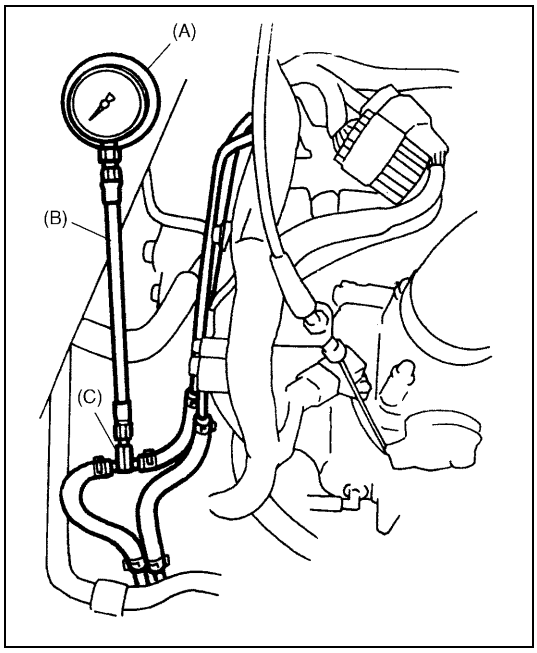

Special tool
(A): 09912-58442
(B): 09912-58432
(C): 09912-58490

Table B-4 Idle Air Control System Check

Wiring Diagram

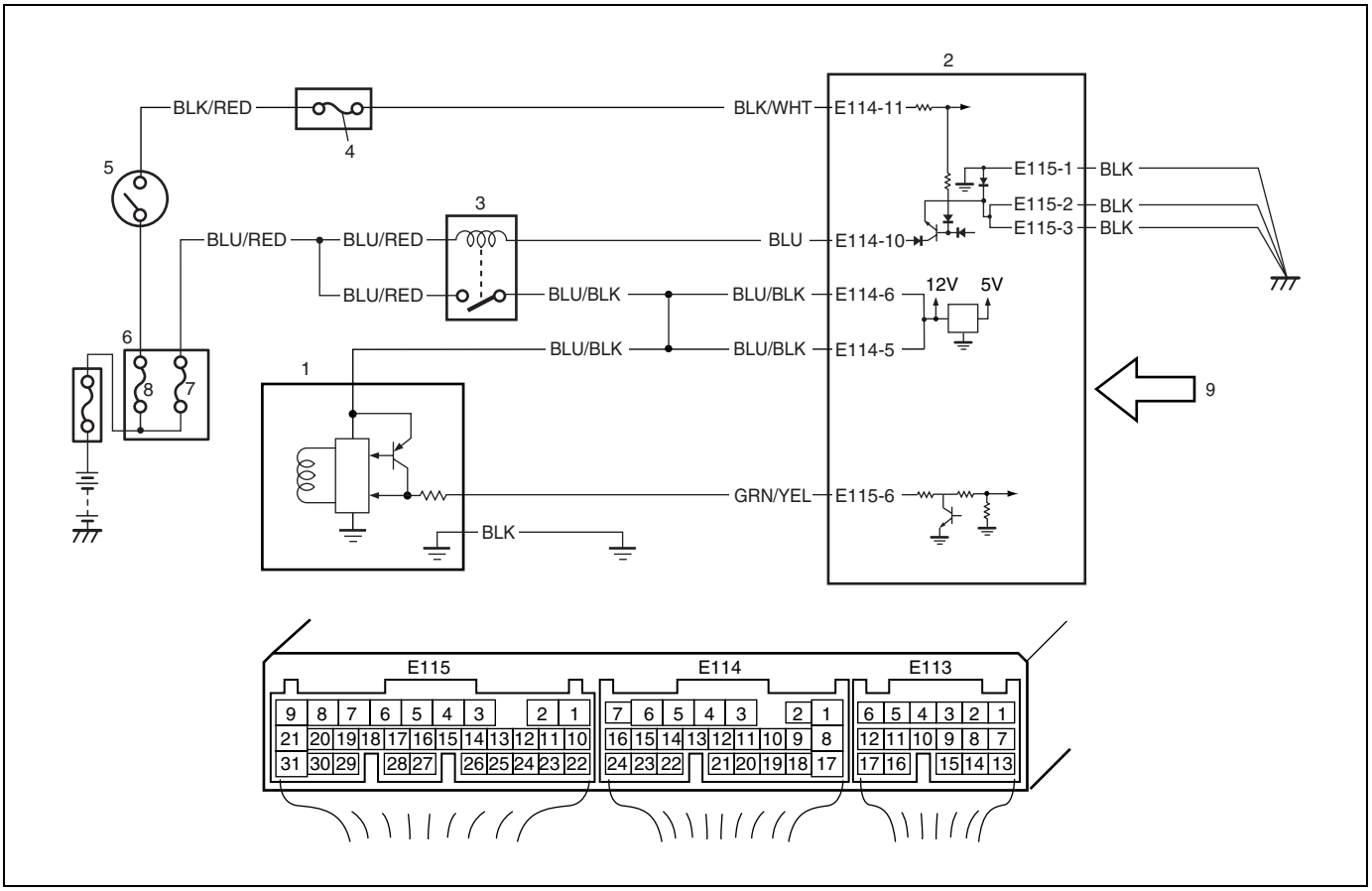

1. IAC valve	4. "IG" fuse	7. "FI" fuse
2. ECM	5. Ignition switch	8. "IGN1" fuse
3. Main relay	6. Relay box	9. A/C signal, PNP signal and headlight signal

Troubleshooting

Step	Action	Yes	No
1	Check engine idle speed and IAC duty referring to "Idle Speed / Idle Air Control (IAC) Duty Inspection" in Section 6E. Is idle speed within specification?	Go to Step 2.	Go to Step 4.
2	Is IAC duty within specification in Step 1?	Go to Step 3.	Check for followings: • Vacuum leak • EVAP canister purge control system • Clog of IAC air passage • Accessory engine load • Closed throttle position (TP sensor) • Stuck of PCV valve
3	Is engine idle speed kept specified speed even with headlight ON?	System is in good condition.	Go to Step 8.

Step	Action	Yes	No
4	Was idle speed higher than specification in Step 1?	Go to Step 5.	Go to Step 6.
5	Check A/C (input) signal circuit referring to Step 2 of Table B-5 A/C Signal Circuit Check, if equipped. (A/C signal can be also checked by using SUZUKI scan tool.) Is it in good condition?	Go to Step 8.	Repair or replace A/C signal circuit or A/C system.
6	Is vehicle equipped with A/T?	Go to Step 7.	Go to Step 8.
7	Check PNP signal (“D” range signal). [Using SUZUKI scan tool] 1) Connect SUZUKI scan tool to DLC with ignition switch OFF. 2) Turn ignition switch ON and check PNP signal (“P/N” and “D” range) on display when shifting selector lever to each range. See Table 1. Is check result satisfactory? [Not using SUZUKI scan tool] 1) Turn ignition switch ON. 2) Check voltage at terminal E113-6 of ECM connector connected. See Fig. 1 and Table 1. Is check result satisfactory?	Go to Step 8.	Repair or replace.
8	Check Idle Air Control System. [Using SUZUKI scan tool] 1) Connect SUZUKI scan tool to DLC with ignition switch OFF, set parking brake and block drive wheels. 2) Warm up engine to normal operating temperature. 3) Clear DTC and select “MISC TEST” mode on SUZUKI scan tool. Is it possible to control (increase and reduce) engine idle speed by using SUZUKI scan tool? [Not using SUZUKI scan tool] 1) Remove IAC valve from throttle boy referring to “Idle Air Control Valve (IAC Valve)” in Section 6E. 2) Check IAC valve for operation referring to “Idle Air Control Valve (IAC Valve)” in Section 6E. Is check result satisfactory?	Go to Step 9.	Go to Step 10.
9	Was IAC duty less than about 3% (or more than about 97% for OFF duty meter) in Step 1 of this table?	Check abnormal air inhaling from air intake system, PCV valve and EVAP canister purge control system.	Check TP sensor (closed throttle position) and ECT sensor for performance. If sensors are OK, substitute a known-good ECM.

Step	Action	Yes	No
10	Check wire harness. 1) Disconnect IAC valve connector. 2) Turn ignition switch ON, check voltage between “BLU/BLK” wire terminal of IAC valve connector and vehicle body ground. Is voltage 10 – 14 V?	Go to Step 11.	“BLU/BLK” wire circuit open.
11	Check wire harness. 1) Disconnect ECM connectors with ignition switch OFF. 2) Measure resistance between “GRN/YEL” wire terminal of IAC valve connector and vehicle body ground. Is resistance infinity?	Go to Step 12.	“GRN/YEL” wire circuit shorted to ground.
12	Check wire harness. 1) Turn ignition switch ON. 2) Measure voltage between “GRN/YEL” wire terminal of IAC valve connector and vehicle body ground. Is voltage about 0 V?	Go to Step 13.	“GRN/YEL” wire circuit shorted to power.
13	Check wire harness. 1) Turn ignition switch OFF. 2) Measure resistance between “E115-6” terminal of ECM connector and “GRN/YEL” wire terminal of IAC valve connector. Is resistance below 3 Ω?	Go to Step 14.	“GRN/YEL” wire circuit open.
14	Check wire harness. 1) Measure resistance between “BLK” wire terminal of IAC valve connector and vehicle body ground. Is resistance continuity?	Go to Step 15.	“BLK” wire circuit open.
15	Check IAC valve signal. 1) Connect IAC valve and ECM connectors. 2) Using oscilloscope, check that IAC valve duty pulse is outputted referring to “Reference waveform No.18” and “Reference waveform No.19” under “Inspection of ECM and Its Circuits” in this section. Is duty pulse outputted at E115-6 of ECM terminal?	Replace IAC valve.	Go to Step 16.
16	Check wire harness. 1) Disconnect ECM connectors with ignition switch OFF. 2) Using service wire, ground “E114-10” terminal of ECM connector because of main relay turned ON. 3) Turn ignition switch ON, measure voltage between “E115-6” terminal of ECM connector and vehicle body ground. Is voltage 10 – 14 V?	Substitute a known-good ECM and recheck.	Replace IAC valve.

Fig. 1 for Step 7

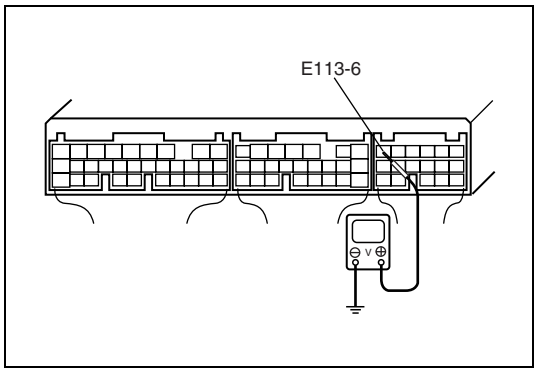

Table 1 for Step 7

		Scan tool or voltmeter	
		SUZUKI SCAN TOOL DISPLAY	VOLTAGE AT E113-6
Selector lever position	“P” and “N” range	P/N range	8 – 14 V
	“R”, “D”, “3”, “2” and “L” range	D range	0 – 1 V

Table B-5 A/C Signal Circuits Check (Vehicle with A/C)

Wiring Diagram

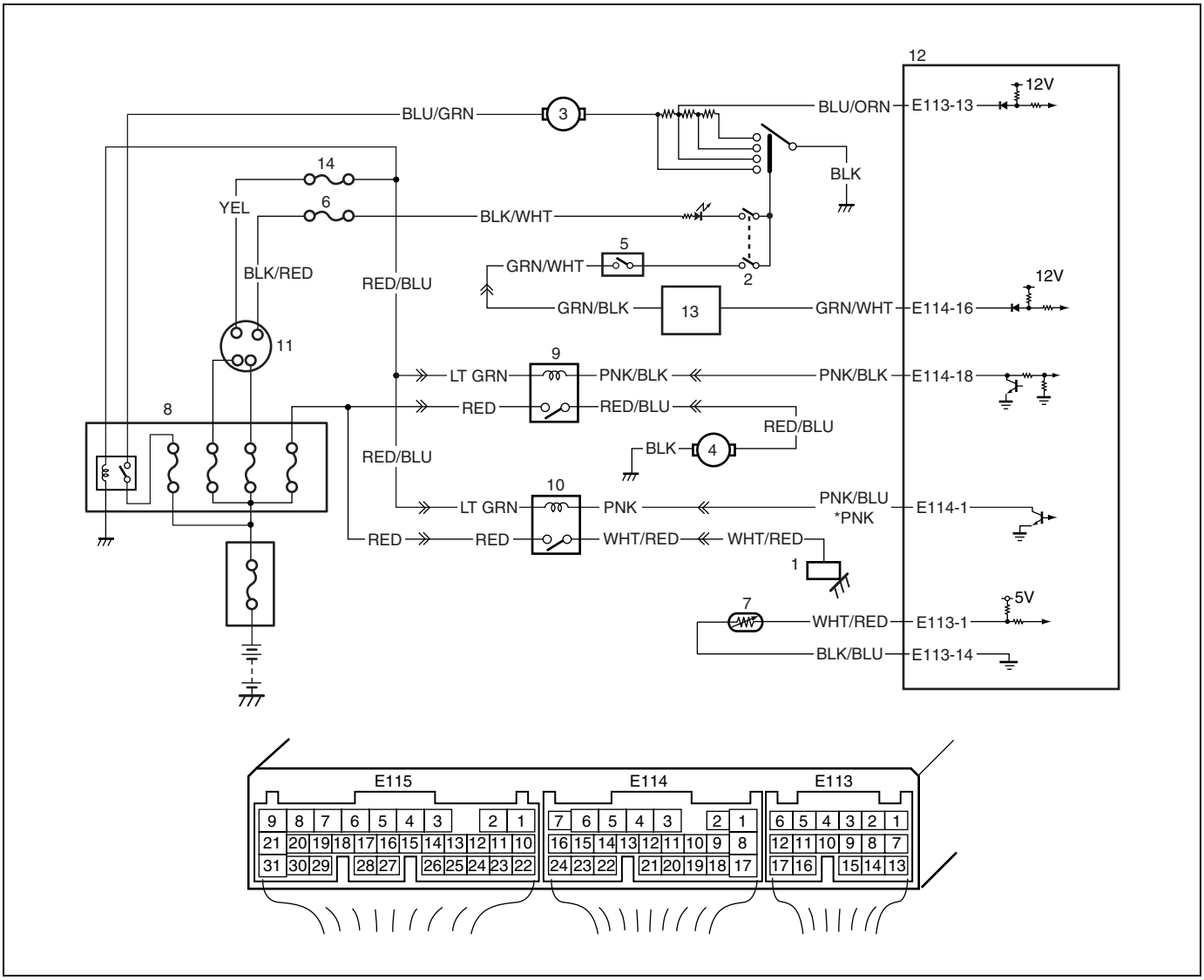

1. A/C compressor	6. "IG" fuse	11. Ignition switch
2. A/C switch	7. Evaporator temp. sensor	12. ECM
3. Blower fan motor	8. Relay box	13. 4WD controller
4. A/C condenser fan motor	9. A/C condenser fan relay	14. "IG2 SIG" fuse
5. Refrigerant pressure switch	10. A/C compressor relay	*: RH steering vehicle

Troubleshooting

Step	Action	Yes	No
1	Check evaporator temp. sensor. 1) Disconnect ECM connectors with ignition switch at OFF position. 2) Check resistance between E113-1 terminal and E113-14 terminal. See Fig. 1. **Evaporator temp. sensor resistance** **At 0 °C 6.3 – 6.9 kΩ** **At 25 °C 1.8 – 2.2 kΩ** Is it within specification?	Go to Step 2.	Faulty A/C evaporator thermistor or its circuit.

Step	Action	Yes	No
2	Check A/C switch circuit. 1) Check voltage at E114-16 terminal under each condition given below. **A/C switch signal specification** **Ignition switch ON, A/C switch OFF** **: 10 – 14 V** **Ignition switch ON, A/C switch ON and heater fan switch 1st position or more** **: 0 – 1 V** Is check result satisfactory?	Go to Step 3.	"GRN/WHT" wire open or short. Poor E114-16 terminal connection. If wire and connection are OK, refer to "General Diagnosis Table" in Section 1B.
3	Check A/C compressor signal. 1) Check voltage at E114-1 terminal under each condition given below. See NOTE. **A/C compressor signal specification** **While engine running, A/C switch OFF** **: 10 – 14 V** **While engine running, A/C switch ON and heater fan switch 1st position or more** **: 0 V** Is check result satisfactory?	A/C compressor signal is in good condition, go to Step 4. If A/C compressor does not operate, refer to "General Diagnosis Table" in Section 1B.	"PNK/BLU" or "PNK" wire open or short. Poor E114-1 terminal connection. If wire and connection are OK, substitute a known-good ECM and recheck.
4	Check A/C condenser fan control signal. 1) Check voltage at E114-18 terminal under each condition given below. See NOTE. **A/C condenser fan control signal specification** **While engine running, A/C switch OFF** **: 10 – 14 V** **While engine running, A/C switch ON and heater fan switch 1st position or more** **: 0 V** Is check result satisfactory?	A/C signal circuits are in good condition. If A/C condenser fan does not operate, refer to "Table B-7 A/C Condenser Fan Control System Check" in this section.	"PNK/BLK" wire open or short. Poor E114-18 terminal connection. If wire and connection are OK, substitute a known-good ECM and recheck.

NOTE:

- **When A/C evaporator thermistor temp. is below 3.5 °C (38.3 °F), A/C remain OFF (E114-1 terminal voltage become 10 – 14 V). This condition is not abnormal.**
- **When engine coolant temp. is above 110 °C (230 °F), A/C condenser fan remain ON (E114-18 terminal voltage become 0 – 1 V). This condition is not abnormal.**

Fig. 1 for Step 1

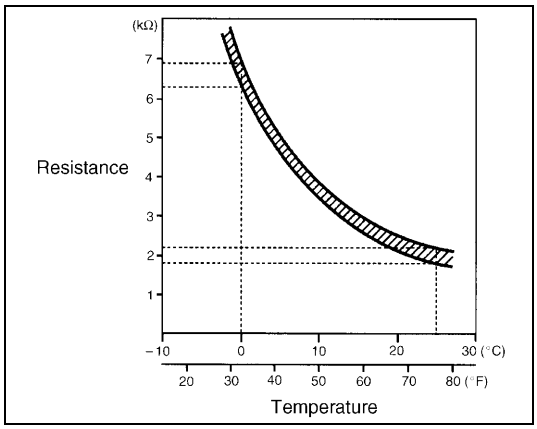

Table B-6 Electric Load Signal Circuit Check

Wiring Diagram

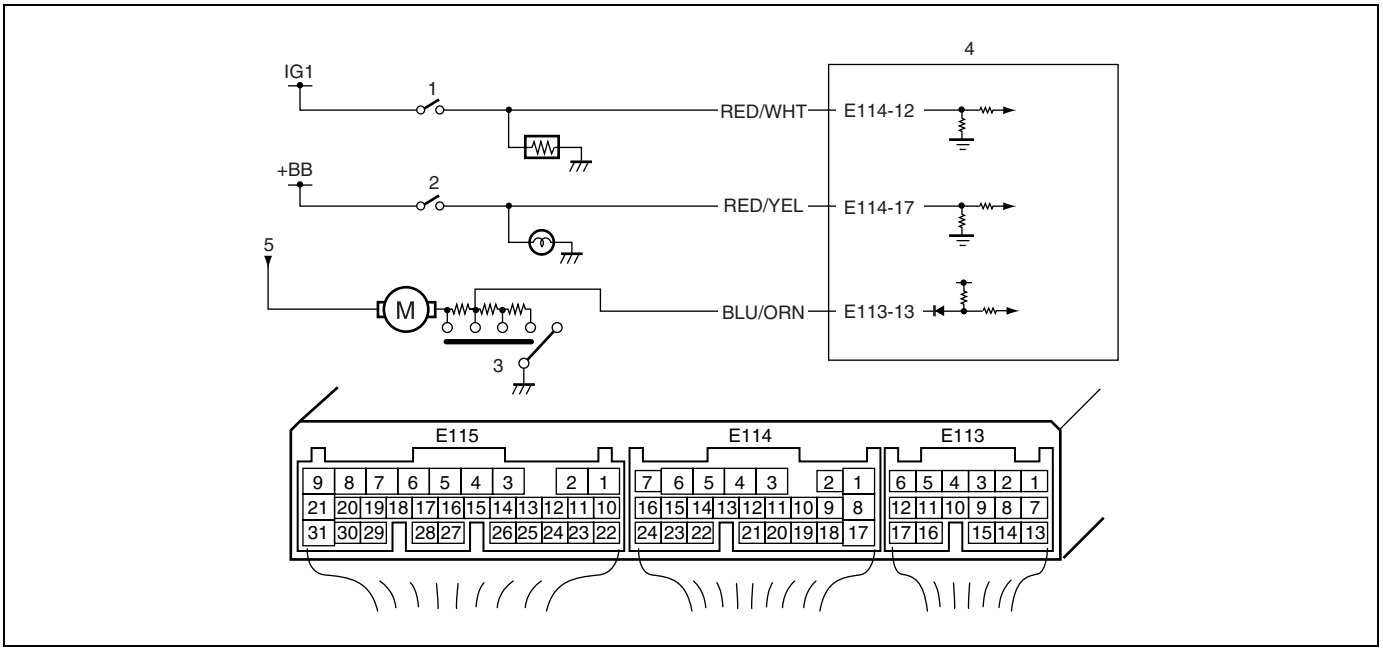

1. Rear defogger switch	3. Blower fan switch	5. To relay box
2. Light switch	4. ECM	

Troubleshooting

Step	Action	Yes	No
1	Is SUZUKI scan tool available?	Go to Step 2.	Go to Step 3.
2	Check electric load signal circuit. 1) Connect SUZUKI scan tool to DLC with ignition switch OFF. See Fig. 1. 2) Start engine and select “DATA LIST” mode on scan tool. 3) Check electric load signal under following each condition. See Table 1. Is check result satisfactory?	Electric load signal circuit is in good condition.	“RED/WHT”, “RED/YEL” and/or “BLU/ORN” circuit open or short, electric load diodes malfunction or each electric load circuit malfunction.
3	Check electric load signal circuit. 1) Turn ignition switch ON. 2) Check voltage at each terminals E114-12, E114-17 and E113-13 of ECM connector connected, under above each condition. See Fig. 2. and Table 1. Is each voltage as specified?	Electric load signal circuit is in good condition.	“RED/WHT”, “RED/YEL” and/or “BLU/ORN” circuit open or short, electric load diodes malfunction or each electric load circuit malfunction.

[A] Fig. 1 for Step 2 / [B] Fig. 2 for Step 3

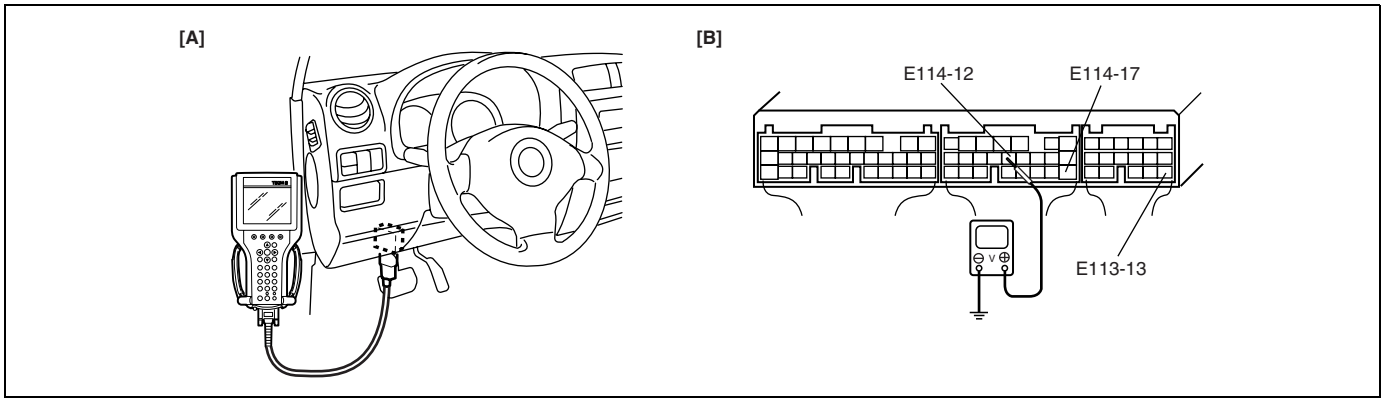

Table 1 for Step 2 and 3

		Scan tool or voltmeter		
		SUZUKI SCAN TOOL	VOLTAGE AT E114-12 or E114-17	VOLTAGE AT E113-13
Ignition switch ON, Small light, heater blower fan (3rd speed position or more) and rear defogger all turned	OFF	OFF	0 – 1 V	10 – 14 V
	ON	ON	10 – 14 V	0 – 1 V

Table B-7 A/C Condenser Fan Control System Check

Wiring Diagram

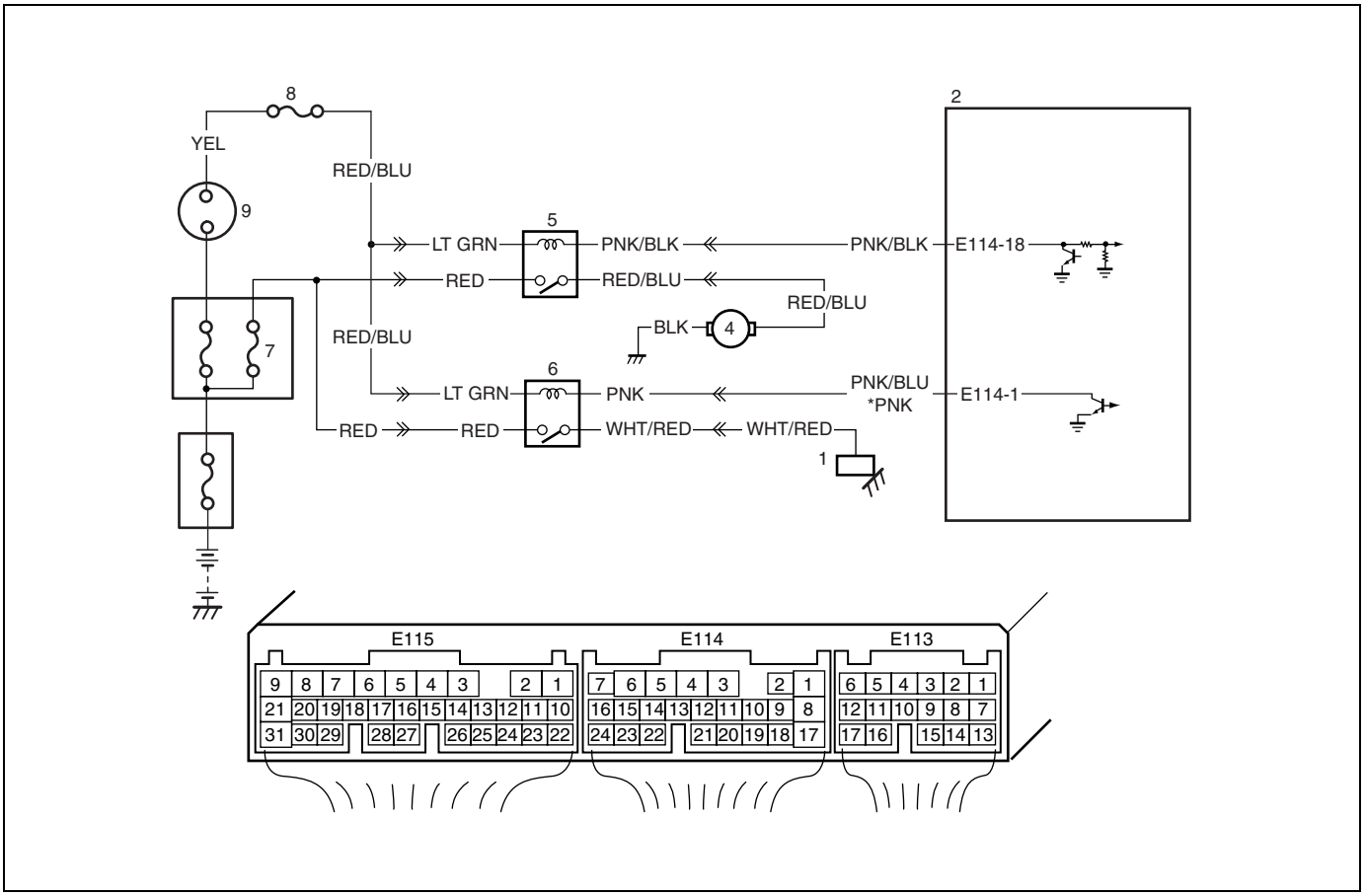

1. A/C compressor	5. A/C condenser fan relay	9. Ignition switch
2. ECM	6. A/C compressor relay	*: RH steering vehicle
3. Blower fan motor	7. "A/C" fuse	
4. A/C condenser fan motor	8. "IG2 SIG" fuse	

Troubleshooting

Step	Action	Yes	No
1	Check A/C condenser fan operation. Is A/C condenser fan started when A/C and blower fan switch turned ON while engine running?	A/C condenser fan control system is in good condition.	Go to Step 2.
2	Fuse check. 1) Turn ignition switch OFF. 2) Check for fuse blown at "A/C" fuse in relay box. Is "A/C" fuse in good condition?	Go to Step 3.	Replace "A/C" fuse and check for short.
3	Check wire harness. 1) Disconnect A/C condenser fan connector. 2) With engine running, check voltage between "RED/BLU" wire terminal of A/C condenser fan connector and vehicle body ground when A/C and blower fan switch turned ON. Is voltage 10 – 14 V?	"BLK" wire circuit open. If wire is OK, check A/C condenser fan motor referring to "A/C Condenser Fan" in Section 6E.	Go to Step 4.

Step	Action	Yes	No
4	Check A/C condenser fan relay circuit. 1) Remove A/C condenser fan relay from relay box. 2) Turn ignition switch ON, check voltage between "LT GRN" and "RED" wire terminal of A/C condenser fan relay connector and vehicle body ground. Is voltage 10 – 14 V?	Go to Step 5.	"LT GRN" or "RED" wire circuit open.
5	Check A/C condenser fan control signal. 1) Install A/C condenser fan relay to relay box with ignition switch OFF. 2) Turn ignition switch ON, check voltage between E114-18 terminal of ECM connector and vehicle body ground. Is voltage 10 – 14 V?	Go to Step 6.	"PNK/BLK" wire open or short.
6	Check A/C condenser fan control signal. 1) Disconnect ECM connector with ignition switch OFF. 2) Using service wire, ground "E114-18" terminal of ECM connector. 3) Turn ignition switch ON. Does A/C condenser fan operate?	Substitute a known-good ECM and recheck.	Go to Step 7.
7	Check A/C condenser fan relay referring to "Main Relay, Fuel Pump Relay, A/C Compressor Relay and A/C Condenser Fan Relay" in Section 6E. Is it in good condition?	"RED/BLU" wire in open or high resistance circuit.	Replace A/C condenser fan relay.

Special Tool

	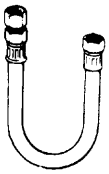	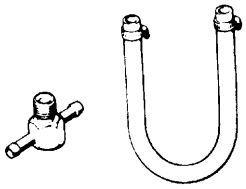	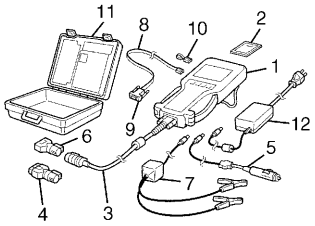
09912-58442 Pressure gauge	09912-58432 Pressure hose	09912-58490 3-way joint & hose	Tech 2 kit (SUZUKI scan tool) (See NOTE.)

NOTE:

This kit includes the following items and substitutes for the Tech 1A kit.
1. Tech 2, 2. PCMCIA card, 3. DLC cable, 4. SAE 16/19 adapter, 5. Cigarette cable, 6. DLC loopback adapter, 7. Battery power cable, 8. RS232 cable, 9. RS232 adapter, 10. RS232 loopback connector, 11. Storage case, 12. Power supply

SECTION 6-2

ENGINE GENERAL INFORMATION AND DIAGNOSIS (K9K ENGINE)

WARNING:

For vehicles equipped with a Supplemental Restraint (Air Bag) System:

- **Service on and around the air bag system components or wiring must be performed only by an authorized SUZUKI dealer. Refer to "Air Bag System Components and Wiring Location View" under "General Description" in air bag system section in order to confirm whether you are performing service on or near the air bag system components or wiring. Please observe all WARNINGS and "Precautions" under "On-Vehicle Service" in air bag system section before performing service on or around the air bag system components or wiring. Failure to follow WARNINGS could result in unintentional activation of the system or could render the system inoperative. Either of these two conditions may result in severe injury.**
- **Technical service work must be started at least 90 seconds after the ignition switch is turned to the "LOCK" position and the negative cable is disconnected from the battery. Otherwise, the system may be activated by reserve energy in the Sensing and Diagnostic Module (SDM).**

NOTE:

For the items with asterisk (*) in the "CONTENTS" below, refer to the same section of the Service Manual mentioned in "FOREWORD" of this manual.

CONTENTS

General Information .....6-2- *
- Statement of Cleanliness and Care .....6-2- *
- General Information on Engine Service .....6-2- *
  - Precaution on fuel system service.....6-2- *
  - Fuel pressure relief confirmation procedure .....6-2- *
  - Fuel leakage check procedure .....6-2- *

Engine Diagnosis .....6-2- *
- General Description .....6-2- *
- On-Board Diagnostic System.....6-2- *
- Precaution in Diagnosing Trouble .....6-2- *
- Engine Diagnostic Flow Table.....6-2- *
  - Diagnostic step details .....6-2- *
- Diagnostic Trouble Code (DTC) Check.....6-2- *
- Diagnostic Trouble Code (DTC) Clearance.....6-2- *
- Diagnostic Trouble Code (DTC) Table.....6-2- *
- Indicator lamp operation table.....6-2- *
- Visual Inspection .....6-2- *
- Engine Basic Check .....6-2- *
- Fault Finding – Fault Interpretation 6-2-3
- DTC P0070 External air temperature sensor circuit malfunction..... 6-2-3
- DTC P0087 Fuel rail/system pressure too low.....6-2- *
- DTC P0089 Fuel pressure regulator performance problem .....6-2- *
- DTC P0110 Intake air temperature circuit malfunction 6-2-4
- DTC P0115 Engine coolant temperature circuit malfunction 6-2-5
- DTC P0180 Fuel temperature sensor circuit malfunction .....6-2- *
- DTC P0190 Fuel pressure sensor circuit malfunction .....6-2- *
- DTC P0200 Injector circuit .....6-2- *
- DTC P0201 Injector circuit malfunction – cylinder 1.....6-2- *
- DTC P0202 Injector circuit malfunction – cylinder 2.....6-2- *
- DTC P0203 Injector circuit malfunction – cylinder 3.....6-2- *
- DTC P0204 Injector circuit malfunction – cylinder 4.....6-2- *

DTC P0225 Pedal position sensor 1 circuit ..... 6-2- *
DTC P0231 Fuel pump secondary circuit low ..... 6-2- *
DTC P0235 Turbo pressure sensor circuit malfunction ..... 6-2- *
DTC P0301 Cylinder 1 misfire detected ..... 6-2- *
DTC P0302 Cylinder 2 misfire detected ..... 6-2- *
DTC P0303 Cylinder 3 misfire detected ..... 6-2- *
DTC P0304 Cylinder 4 misfire detected ..... 6-2- *
DTC P0325 Knock sensor circuit malfunction ..... 6-2- *
DTC P0335 Crankshaft position sensor circuit malfunction ..... 6-2- *
DTC P0340 Camshaft position sensor circuit malfunction ..... 6-2- *
DTC P0380 Glow plug/heater circuit malfunction ..... 6-2- *
DTC P0670 Glow plug module control circuit ..... 6-2- *
DTC P0382 Glow plug/heater circuit B malfunction ..... 6-2- *
DTC P0400 Exhaust gas recirculation flow malfunction 6-2-6
DTC P2413 Exhaust gas recirculation system performance 6-2-6
DTC P0402 Exhaust gas recirculation flow excessive detected 6-2-7
DTC P0403 Exhaust gas recirculation control circuit 6-2-7
DTC P0409 Exhaust gas recirculation sensor circuit ..... 6-2- *
DTC P0487 Exhaust gas recirculation throttle position control circuit ..... 6-2- *
DTC P0480 Radiator cooling fan low speed control system malfunction ..... 6-2- *
DTC P0481 Radiator cooling fan high speed control system malfunction ..... 6-2- *
DTC P0500 Vehicle speed sensor circuit malfunction 6-2-8
DTC P0513 Incorrect immobilizer key 6-2-9
DTC P0530 A/C refrigerant pressure sensor circuit malfunction 6-2-10
DTC P0560 System voltage ..... 6-2- *
DTC P0604 Control module internal fail ..... 6-2- *
DTC P0605 Control module program error ..... 6-2- *
DTC P0606 Control module program error ..... 6-2- *
DTC P0608 Sensor supply circuit 1 fail ..... 6-2- *
DTC P0609 Sensor supply circuit 2 fail ..... 6-2- *
DTC P0651 Sensor reference voltage circuit/open ..... 6-2- *
DTC P0645 A/C compressor relay control circuit malfunction ..... 6-2- *
DTC P0685 Main relay control circuit malfunction ..... 6-2- *
DTC P103D A/C signal circuit malfunction ..... 6-2- *
DTC P1641 Additional heater relay circuit 1 ..... 6-2- *
DTC P1643 Additional heater relay circuit 2 ..... 6-2- *
DTC P2120 Pedal position sensor 2 circuit ..... 6-2- *
DTC P2226 Barometric pressure circuit malfunction ..... 6-2- *
Fault Finding – Customer Complaints ..... 6-2- *
Table 1 No dialogue with the ECM ..... 6-2- *
Table 2 The engine does not start ..... 6-2- *
Table 3 The engine starts with difficulty or starts then stalls ..... 6-2- *
Table 4 Starting difficult with warm engine ..... 6-2- *
Table 5 Rough idle speed (pumping) ..... 6-2- *
Table 6 Idle speed too high/too low ..... 6-2- *
Table 7 Unexpected acceleration/ deceleration and engine stalling ..... 6-2- *
Table 8 Response fault ..... 6-2- *
Table 9 Engine stop/stalling ..... 6-2- *
Table 10 Engine jerking ..... 6-2- *
Table 11 Lack of power ..... 6-2- *
Table 12 Too much power ..... 6-2- *
Table 13 Excessive consumption ..... 6-2- *
Table 14 Overspeed when lifting off accelerator or changing gear ..... 6-2- *
Table 15 Engine dies on pulling away ..... 6-2- *
Table 16 The engine does not stop ..... 6-2- *
Table 17 Clanking engine, noisy engine ..... 6-2- *
Table 18 Squalling noise ..... 6-2- *
Table 19 Various mechanical noises ..... 6-2- *
Table 20 Exhaust odours ..... 6-2- *
Table 21 Diesel odours ..... 6-2- *
Table 22 Blue, white or black smoke ..... 6-2- *
Table 23 Blue, black or white smoke when accelerating ..... 6-2- *
Fault Finding – Tests ..... 6-2- *
Test 1: Low Pressure Circuit Check ..... 6-2- *
Test 2: Electrical Circuit Check ..... 6-2- *
Test 3: Injector Check ..... 6-2- *
Test 4: Parameter Check ..... 6-2- *
Test 5: Air Inlet Circuit Check ..... 6-2- *
Test 6: ECM Check ..... 6-2- *
Test 7 High Pressure Pump Check ..... 6-2- *
Test 8: Diesel filter check ..... 6-2- *
Special Tool ..... 6-2- *

Fault Finding – Fault Interpretation

DTC P0070 External air temperature sensor circuit malfunction

Detecting Condition

• CC0: Short circuit to earth • CO1: Open circuit or short circuit to + 12 volt

Troubleshooting

Check the connection and condition of the external air temperature sensor connector. Repair if necessary.
Check the connection and condition of the ECM C47 connector. Repair if necessary.
Measure resistance of the external air temperature sensor, if it is not approximately 2051 Ω ± 120 Ω at 25 °C replace the external air temperature sensor.
Check the insulation, continuity and absence of interference resistance of the connections: • Between “BLU/BLK” wire of external air temperature sensor connector and C47-19 terminal of ECM connector • Between “LT GRN/RED” wire of external air temperature sensor connector and C47-29 terminal of ECM connector Repair if necessary.

After Repair

Deal with any faults detected by SUZUKI scan tool.
Clear the DTC.
Carry out a road test followed by another check with the SUZUKI scan tool.

DTC P0110 Intake air temperature circuit malfunction

Detecting Condition

• CC0: Short circuit to earth • CO1: Open circuit or short circuit to + 12 volt

Troubleshooting

Check the connection and condition of the intake air temperature sensor connector. Repair if necessary.
Check the connection and condition of the ECM C47 connector. Repair if necessary.
Measure the resistance of the intake air temperature sensor, if it is not approximately 2051 Ω ± 120 Ω at 25 °C replace the intake air temperature sensor.
Check for insulation, continuity and absence of interference resistance of the connections: • “LT GRN” wire of intake air temperature sensor connector and C47-20 terminal of ECM connector • “LT GRN/BLK” wire of intake air temperature sensor connector and C47-30 terminal of ECM connector Repair if necessary.

After Repair

Deal with any faults detected by SUZUKI scan tool.
Clear the DTC.
Carry out a road test followed by another check with the SUZUKI scan tool.

DTC P0115 Engine coolant temperature circuit malfunction

NOTE:

- **If DTC P0115 is detected, radiator cooling fan motor operation is present.**
- **The preheating time is 15 seconds.**

Detecting Condition

• CC0: Short circuit to earth • CO1: Open circuit or short circuit to + 12 volt

Troubleshooting

Check the connection and condition of the coolant temperature sensor connector. Repair it if necessary.
Check the connection and condition of the ECM C47 connector. Repair if necessary.
Measure the resistance between C19-1 and C19-4 terminals of the coolant temperature sensor, if it is not approximately 2252 Ω ± 112.16 Ω at 25 °C, replace the coolant temperature sensor.
Check the insulation, continuity and absence of interference resistance of the connections: • Between “BLU/WHT” wire of engine coolant temperature sensor connector and C47-31 terminal of ECM connector • Between “BLU/RED” wire of engine coolant temperature sensor connector and C47-21 terminal of ECM connector Repair if necessary.

After Repair

Deal with any faults detected by SUZUKI scan tool.
Clear the DTC.
Carry out a road test followed by another check with the SUZUKI scan tool.

DTC P0400 Exhaust gas recirculation flow malfunction
DTC P2413 Exhaust gas recirculation system performance

NOTE:

- **DTC P2413 indicated only with generic scan tool.**
- **Fault finding procedure application conditions for stored fault:**
  The fault is declared present with the engine idling.
- **If DTC P0400 or DTC P2413 is detected, engine instability may even lead to stalling.**
  Starting difficult or even impossible when cold.
- **If DTC P0400 or DTC P2413 (D5: component stuck) is detected, malfunction indicator lamp (MIL) lights up.**

Detecting Condition

Using SUZUKI scan tool	Not using SUZUKI scan tool
DTC P0400 • D1: Parameter at limit minimum • D2: Parameter at limit maximum • D3: Inconsistency • D4: Above maximum threshold • D5: Component stuck	DTC P0400 • D1: Parameter at limit minimum • D2: Parameter at limit maximum • D3: Inconsistency • D4: Above maximum threshold DTC P2413 • D5: Component stuck

Troubleshooting

Check the connection and condition of the EGR valve connector. Repair if necessary.
Check the condition of the ECM C47 connector. Repair if necessary.
Measure the resistance at the EGR valve terminal • Approximately 4 KΩ ± 1.6 KΩ at 20 °C between C46-1 terminal and C46-2 terminal of EGR valve • Approximately 1 KΩ ± 0.5 KΩ at 20 °C between C46-2 terminal and C46-3 terminal of EGR valve If it is not, replace the EGR valve.
Check for the 12 V after ignition feed on “BLK/RED” wire of EGR valve connector.
Check for insulation, continuity and absence of interference resistance of the connections: • EGR valve “BLK/RED” wire for power supply circuit • Between C47-6 terminal of ECM connector and “BLU” wire of EGR valve connector Repair if necessary.
If D3: Inconsistency, D4: Above maximum threshold or D5: Component stuck: Remove the EGR valve. Check that there are no foreign bodies (scale…) that could jam the valve. Remove any foreign bodies and clean the EGR valve. Refit the EGR valve. Clear DTC. Carry out a road test followed by another check with the SUZUKI scan tool.

After Repair

Deal with any faults detected by SUZUKI scan tool.
Clear the DTC.
Carry out a road test followed by another check with the SUZUKI scan tool.

DTC P0402 Exhaust gas recirculation flow excessive detected
DTC P0403 Exhaust gas recirculation control circuit

NOTE:

- **DTC P0402 indicated only with generic scan tool.**
- **Fault finding procedure application conditions for stored fault:**
  The fault is declared present with the engine idling.
- **If DTC P0402 or DTC P0403 (CO0: open circuit or short circuit to ground) is detected, malfunction indicator lamp (MIL) lights up.**

Detecting Condition

Using SUZUKI scan tool	Not using SUZUKI scan tool
DTC P0403 • CO0: Open circuit or short circuit to ground • CC1: Short circuit to + 12 volt	DTC P0402 • CO0: Open circuit or short circuit to ground DTC P0403 • CC1: Short circuit to + 12 volt

Troubleshooting

Check the connection and condition of the EGR valve connector. Repair if necessary.
Check the connection and condition of the ECM C47 connector. Repair if necessary.
Measure the resistance between C46-4 and C46-6 terminals of the EGR valve, if it is not approximately 8 Ω ± 0.5 Ω at 25 °C replace the EGR valve.
Check for insulation between C46-4 terminal of EGR valve and EGR valve body. If the insulation is not correct, replace EGR valve.
Check for insulation, continuity and absence of interference resistance of the connections: • EGR valve connector C46-4 for power supply circuit • Between “BLU” wire of EGR valve connector and C47-6 terminal of ECM connector Repair if necessary.

After Repair

Deal with any faults detected by SUZUKI scan tool.
Clear the DTC.
Carry out a road test followed by another check with the SUZUKI scan tool.

DTC P0500 Vehicle speed sensor circuit malfunction

NOTE:

This DTC indicated only with SUZUKI scan tool.

Detecting Condition

• D1: Consistency • D2: No signal

Troubleshooting

Check the condition and connection of the vehicle speed sensor connector. Repair if necessary.
Check the connection and condition of the ECM C48 connector. Repair if necessary.
Check the continuity and absence of interference resistance of the connections: • Vehicle speed sensor “BLK/ORN” wire for power supply circuit • Vehicle speed sensor “BLU/BLK” wire for ground circuit Repair if necessary.
Check for insulation form the +12 volt feed on the connection: • Between “YEL/GRN” wire of vehicle speed sensor connector and C48-23 terminal of ECM connector Repair if necessary.

After Repair

Deal with any faults detected by SUZUKI scan tool.
Clear the DTC.
Carry out a road test followed by another check with the SUZUKI scan tool.

DTC P0513 Incorrect immobilizer key

NOTE:

This DTC indicated only with SUZUKI scan tool.

Troubleshooting

Check the connection and condition of the ECM E17 connector. Repair if necessary.
Check the connection and condition of the immobilizer control module connector. Repair if necessary.
Check for insulation, continuity and absence of interference resistance of the connections: • Between E17-25 terminal of ECM connector and G46-15 terminal of immobilizer control module connector Repair if necessary.

After Repair

Deal with any faults detected by SUZUKI scan tool.
Clear the DTC.
Carry out a road test followed by another check with the SUZUKI scan tool.

DTC P0530 A/C refrigerant pressure sensor circuit malfunction

NOTE:

- **This DTC indicated only with SUZUKI scan tool.**
- **Fault finding procedure application conditions for stored fault:**
  The fault is declared present with the engine idling and air conditioning operating one vehicle equipped with air conditioning system.
- **Priority when dealing with a number of faults:**
  If DTC P0530 and either one of DTC P0608 or DTC P0609 are detected, deal with DTC P0608 Sensor Supply Circuit 1 Fail, DTC P0609 Sensor Supply Circuit 2 Fail first.

Detecting Condition

• CO1: Open circuit or short circuit to + 12 volt • CC0: Short circuit to ground

Troubleshooting

Check the connection and condition of the A/C pressure sensor. Repair if necessary.
Check the connection and condition of the ECM C48 connector. Repair if necessary.
Check for insulation, continuity and absence of interference resistance of the connections: • Between “GRN/RED” wire of A/C pressure sensor connector and C48-3 terminal of ECM connector • Between “LT GRN/RED” wire of A/C pressure sensor connector and C48-9 terminal of ECM connector • Between “GRN/YEL” wire of A/C pressure sensor connector and C48-27 terminal of ECM connector Repair if necessary.

After Repair

Deal with any faults detected by SUZUKI scan tool.
Clear the DTC.
Carry out a road test followed by another check with the SUZUKI scan tool.

SECTION 6-3

ENGINE GENERAL INFORMATION AND DIAGNOSIS (M13 ENGINE WITH VVT)

WARNING:

For vehicles equipped with a Supplemental Restraint (Air Bag) System :

- **Service on and around the air bag system components or wiring must be performed only by an authorized SUZUKI dealer. Refer to "Air Bag System Components and Wiring Location View" under "General Description" in air bag system section in order to confirm whether you are performing service on or near the air bag system components or wiring. Please observe all WARNINGS and "Service Precautions" under "On-Vehicle Service" in air bag system section before performing service on or around the air bag system components or wiring. Failure to follow WARNINGS could result in unintentional activation of the system or could render the system inoperative. Either of these two conditions may result in severe injury.**
- **Technical service work must be started at least 90 seconds after the ignition switch is turned to the "LOCK" position and the negative cable is disconnected from the battery. Otherwise, the system may be activated by reserve energy in the Sensing and Diagnostic Module (SDM).**

CONTENTS

General Information 6-3-3
Statement on Cleanliness and Care 6-3-3
Precaution 6-3-3
Precaution on Engine Service 6-3-3
Precaution on fuel system service 6-3-4
Fuel pressure relief procedure 6-3-5
Fuel leakage check procedure 6-3-5
Diagnosis 6-3-6
Engine Diagnosis General Description 6-3-6
On-Board Diagnostic System Description 6-3-6
CAN Communication System Description 6-3-9
Precaution in Diagnosing Trouble for Engine 6-3-11
Engine and Emission Control System Check 6-3-12
Malfunction Indicator Lamp (MIL) Check 6-3-15
Diagnostic Trouble Code (DTC) Check 6-3-15
Diagnostic Trouble Code (DTC) Clearance 6-3-16
Diagnostic Trouble Code (DTC) Table 6-3-18
Fail-Safe Table 6-3-22
Visual Inspection 6-3-23
Engine Basic Inspection 6-3-24
Engine Symptom Diagnosis 6-3-26
Scan Tool Data 6-3-34
Scan tool data definitions 6-3-36
Inspection of ECM and Its Circuits 6-3-39
Component Location 6-3-62
Table A-1 Malfunction Indicator Lamp Circuit Check – Lamp Does Not Come "ON" with Ignition Switch ON (But Engine Stops) 6-3-63
Table A-2 Malfunction Indicator Lamp Circuit Check – Lamp Remains "ON" after Engine Starts 6-3-65
Table A-3 ECM Power and Ground Circuit Check – MIL Doesn't Light with Ignition Switch ON and Engine Doesn't Start Though It Is Cranked Up 6-3-67
DTC P0010 Camshaft Position Actuator Circuit 6-3-70
DTC P0011 / P0012 Camshaft Position – Timing Over-Advanced or System Performance / -Retarded 6-3-73
DTC P0031 / P0032 HO2S Heater Control Circuit Low / High (Sensor-1) 6-3-75
DTC P0037 / P0038 HO2S Heater Control Circuit Low / High (Sensor-2) 6-3-78
DTC P0101 Mass Air Flow Circuit Range / Performance 6-3-81

DTC P0102 Mass Air Flow Circuit Low Input 6-3-85
DTC P0103 Mass Air Flow Circuit High Input 6-3-88
DTC P0106 Manifold Absolute Pressure Range / Performance 6-3-90
DTC P0107 Manifold Absolute Pressure Circuit Low Input 6-3-92
DTC P0108 Manifold Absolute Pressure Circuit High Input 6-3-95
DTC P0111 Intake Air Temperature Circuit Range / Performance 6-3-98
DTC P0112 Intake Air Temperature Sensor Circuit Low 6-3-101
DTC P0113 Intake Air Temperature Sensor Circuit High 6-3-104
DTC P0116 Engine Coolant Temperature Circuit Range / Performance 6-3-107
DTC P0117 Engine Coolant Temperature Circuit Low 6-3-110
DTC P0118 Engine Coolant Temperature Circuit High 6-3-112
DTC P0121 Throttle Position Sensor Circuit Range / Performance 6-3-115
DTC P0122 Throttle Position Sensor Circuit Low 6-3-119
DTC P0123 Throttle Position Sensor Circuit High 6-3-122
DTC P0131 / P0132 O2 Sensor (HO2S) Circuit Low Voltage / High Voltage (Sensor-1) 6-3-125
DTC P0133 O2 Sensor (HO2S) Circuit Slow Response (Sensor-1) 6-3-129
DTC P0134 O2 Sensor (HO2S) Circuit No Activity Detected (Sensor-1) 6-3-131
DTC P0140 O2 Sensor (HO2S) Circuit No Activity Detected (Sensor-2) 6-3-134
DTC P0171 / P0172 Fuel System Too Lean / Rich 6-3-136
DTC P0300 / P0301 / P0302 / P0303 / P0304 Random Misfire Detected / Cylinder 1 / Cylinder 2 / Cylinder 3 / Cylinder 4 Misfire Detected 6-3-138
DTC P0327 / P0328 Knock Sensor Circuit Low / High 6-3-140
DTC P0335 Crankshaft Position (CKP) Sensor Circuit 6-3-143
DTC P0340 Camshaft Position (CMP) Sensor Circuit 6-3-146
DTC P0401 / P0402 Exhaust Gas Recirculation Flow Insufficient Detected / Excessive Detected 6-3-149
DTC P0403 Exhaust Gas Recirculation Control Circuit 6-3-152
DTC P0420 Catalyst System Efficiency below Threshold 6-3-154
DTC P0443 Evaporative Emission System Purge Control Valve Circuit 6-3-157
DTC P0481 Fan 2 (A/C Condenser Fan) Control Circuit 6-3-159
DTC P0500 Vehicle Speed Sensor (VSS) Malfunction 6-3-162
DTC P0505 Idle Air Control System 6-3-165
DTC P0601 / P0602 Internal Control Module Memory Check Sum Error / Control Module Programming Error 6-3-168
DTC P0616 Starter Relay Circuit Low 6-3-169
DTC P0617 Starter Relay Circuit High 6-3-171
DTC P1510 ECM Back-Up Power Supply Malfunction 6-3-173
DTC P1570 ABS Signal Circuit Malfunction 6-3-175
DTC P1603 TCM Trouble Code Detected 6-3-177
DTC P1674 CAN Communication (Bus Off Error) 6-3-178
DTC P1675 CAN Communication (Transmission Error) 6-3-181
DTC P1676 CAN Communication (Reception Error for TCM) 6-3-184
DTC P2227 / P2228 / P2229 Barometric Pressure Circuit Malfunction 6-3-187
DTC P2227 Barometric Pressure Circuit Range / Performance 6-3-187
DTC P2228 Barometric Pressure Circuit Low 6-3-187
DTC P2229 Barometric Pressure Circuit High 6-3-187
Table B-1 Fuel Injector Circuit Check 6-3-189
Table B-2 Fuel Pump and Its Circuit Check 6-3-191
Table B-3 Fuel Pressure Check 6-3-194
Table B-4 Idle Air Control System Check 6-3-196
Table B-5 A/C System Circuit Check 6-3-198
Table B-6 Electric Load Signal Circuit Check 6-3-203
Special Tool 6-3-205

General Information

Statement on Cleanliness and Care

An automobile engine is a combination of many machined, honed, polished and lapped surfaces with tolerances that are measured in the thousands of an millimeter (ten thousands of an inch).
Accordingly, when any internal engine parts are serviced, care and cleanliness are important.
Throughout this section, it should be understood that proper cleaning and protection of machined surfaces and friction areas is part of the repair procedure. This is considered standard shop practice even if not specifically stated.

- A liberal coating of engine oil should be applied to friction areas during assembly to protect and lubricate the surfaces on initial operation.
- Whenever valve train components, pistons, piston rings, connecting rods, rod bearings, and crankshaft journal bearings are removed for service, they should be retained in order.
  At the time of installation, they should be installed in the same locations and with the same mating surfaces as when removed.
- Battery cables should be disconnected before any major work is performed on the engine.
  Failure to disconnect cables may result in damage to wire harness or other electrical parts.

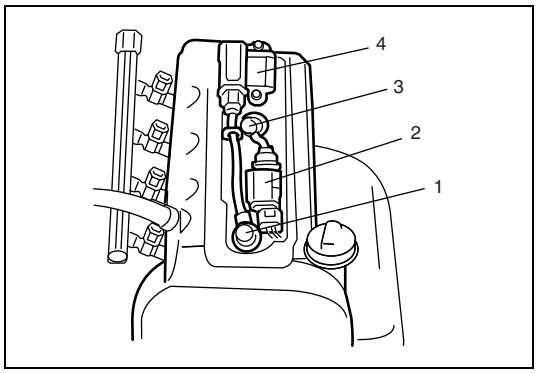

- Throughout this manual, the four cylinders of the engine are identified by numbers; No.1 (1), No.2 (2), No.3 (3) and No.4 (4) counted from crankshaft pulley side to flywheel side.

Precaution

Precaution on Engine Service

THE FOLLOWING INFORMATION ON ENGINE SERVICE SHOULD BE NOTED CAREFULLY, AS IT IS IMPORTANT IN PREVENTING DAMAGE, AND IN CONTRIBUTING TO RELIABLE ENGINE PERFORMANCE.

- When raising or supporting engine for any reason, do not use a jack under oil pan. Due to small clearance between oil pan and oil pump strainer, jacking against oil pan may cause it to be bent against strainer, resulting in damaged oil pick-up unit.
- It should be kept in mind, while working on engine, that 12-volt electrical system is capable of violent and damaging short circuits.
  When performing any work where electrical terminals can be grounded, ground cable of the battery should be disconnected at battery.
- Any time the air cleaner, throttle body or intake manifold is removed, the intake opening should be covered. This will protect against accidental entrance of foreign material which could follow intake passage into cylinder and cause extensive damage when engine is started.

Precaution on fuel system service

- Work must be done with no smoking, in a well-ventilated area and away from any open flames.
- As fuel feed line (between fuel pump and fuel delivery pipe) is still under high fuel pressure even after engine was stopped, loosening or disconnecting fuel feed line directly may cause dangerous spout of fuel to occur where loosened or disconnected.
  Before loosening or disconnecting fuel feed line, make sure to release fuel pressure according to “Fuel Pressure Relief Procedure”. A small amount of fuel may be released after the fuel line is disconnected. In order to reduce the chance of personal injury, cover the fitting to be disconnected with a shop cloth. Put that cloth in an approved container when disconnection is completed.
- Never run engine with fuel pump relay disconnected when engine and exhaust system are hot.
- Fuel or fuel vapor hose connection varies with each type of pipe. When reconnecting fuel or fuel vapor hose, be sure to connect and clamp each hose correctly referring to the figure Hose Connection.
  After connecting, make sure that it has no twist or kink.

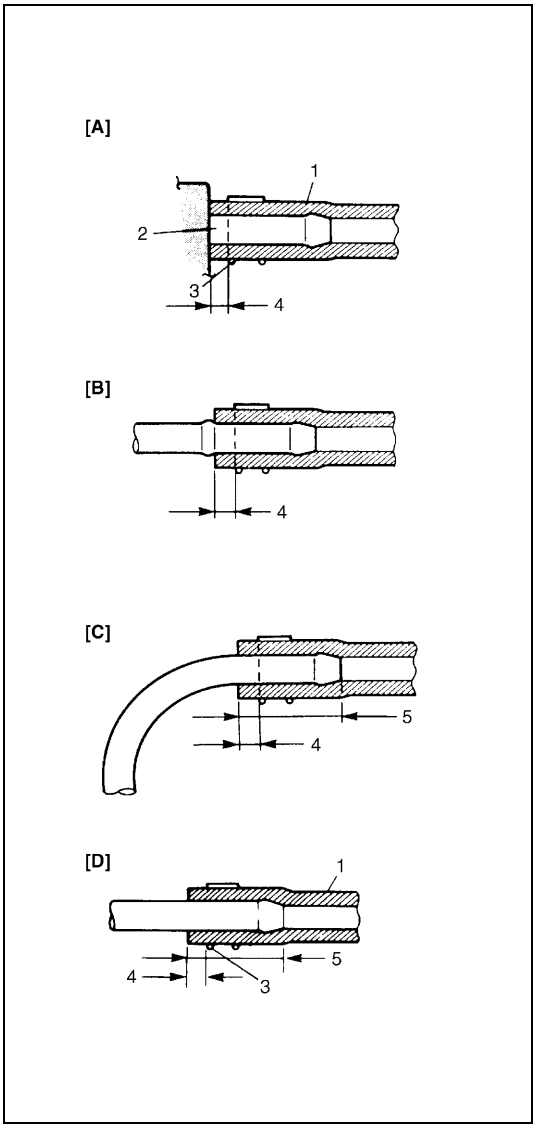

[A]:	With short pipe, fit hose as far as it reaches pipe joint as shown.
[B]:	With following type pipe, fit hose as far as its peripheral projection as shown.
[C]:	With bent pipe, fit hose as its bent part as shown or till pipe is about 20 to 30 mm (0.79 – 1.18 in.) into the hose.
[D]:	With straight pipe, fit hose till pipe is, about 20 to 30 mm (0.79 – 1.18 in.) into the hose.
1.	Hose
2.	Pipe
3.	Clamp
4.	Clamp securely at a position 3 to 7 mm (0.1 2 – 0.27 in.) from hose end.
5.	20 to 30 mm (0.79 – 1.18 in.)

- When installing injector or fuel delivery pipe, lubricate its O-ring with spindle oil or gasoline.
- When connecting fuel pipe flare nut, first tighten flare nut by hand and then tighten it to specified torque.

Fuel pressure relief procedure

CAUTION:
This work must not be done when engine is hot. If done so, it may cause adverse effect to catalyst.

NOTE:
If ECM detects DTC(s) after servicing, clear DTC(s) referring to "Diagnostic Trouble Code (DTC) Clearance" in this section.

After making sure that engine is cold, release fuel pressure as follows.

1) Place transmission gear shift lever in "Neutral" (Shift selector lever to "P" range for A/T model), set parking brake, and block drive wheels.
2) Remove relay box cover.

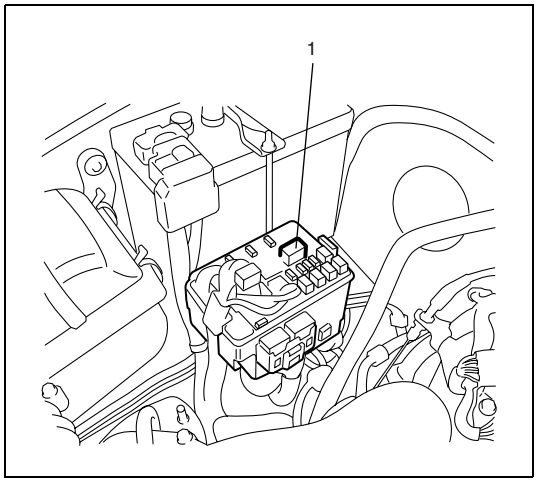

3) Disconnect fuel pump relay (1) from its connector.
4) Remove fuel filler cap to release fuel vapor pressure in fuel tank and then reinstall it.
5) Start engine and run it till it stops for lack of fuel. Repeat cranking engine 2-3 times for about 3 seconds each time to dissipate fuel pressure in lines. Fuel connections are now safe for servicing.
6) Upon completion of servicing, connect fuel pump relay (1) to its connector.

Fuel leakage check procedure

After performing any service on fuel system, check to make sure that there are no fuel leakages as follows.

1) Turn ON ignition switch for 3 seconds (to operate fuel pump) and then turn it OFF.
   Repeat this (ON and OFF) 3 or 4 times and apply fuel pressure to fuel line. (till fuel pressure is felt by hand placed on fuel feed hose.)
2) In this state, check to see that there are no fuel leakages from any part of fuel system.

Diagnosis

Engine Diagnosis General Description

This vehicle is equipped with an engine and emission control system which are under control of ECM.
The engine and emission control system in this vehicle are controlled by ECM. ECM has an On-Board Diagnostic system which detects a malfunction in this system and abnormality of those parts that influence the engine exhaust emission. When diagnosing engine troubles, be sure to have full understanding of the outline of “On-Board Diagnostic System” and each item in “Precaution in Diagnosing Trouble” and execute diagnosis according to “Engine and Emission Control System Check”.
There is a close relationship between the engine mechanical, engine cooling system, ignition system, exhaust system, etc. and the engine and emission control system in their structure and operation. In case of an engine trouble, even when the malfunction indicator lamp (MIL) doesn’t turn ON, it should be diagnosed according to this flow.

On-Board Diagnostic System Description

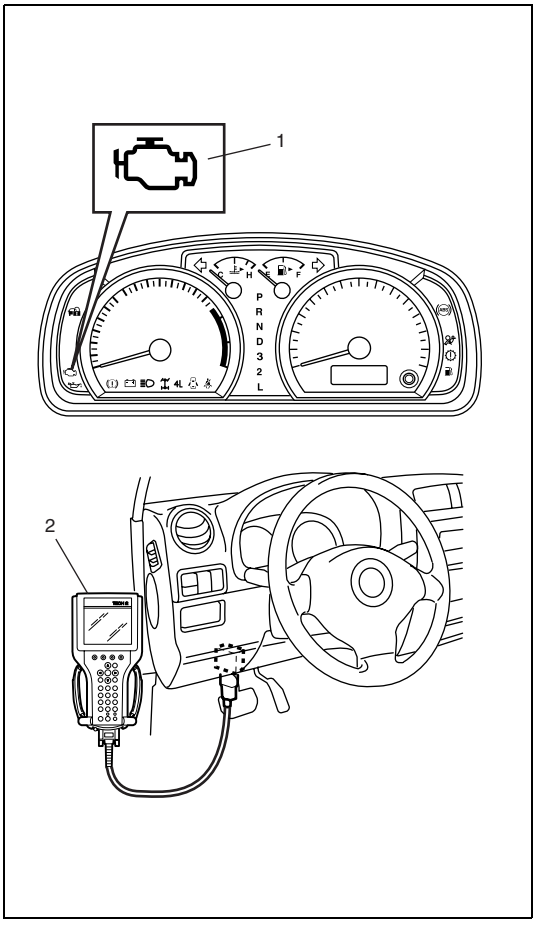

ECM in this vehicle has following functions.

- When the ignition switch is turned ON with the engine at a stop, malfunction indicator lamp (MIL) (1) turns ON to check the circuit of the malfunction indicator lamp (1).
- When ECM detects a malfunction which gives an adverse effect to vehicle emission while the engine is running, it makes the malfunction indicator lamp (1) in the meter cluster of the instrument panel turn ON or flash (flashing only when detecting a misfire which can cause damage to the catalyst) and stores the malfunction area in its memory.
  (If it detects that continuously 3 driving cycles are normal after detecting a malfunction, however, it makes MIL (1) turn OFF although DTC stored in its memory will remain.)
- As a condition for detecting a malfunction in some areas in the system being monitored by ECM and turning ON the malfunction indicator lamp (1) due to that malfunction, 2 driving cycle detection logic is adopted to prevent erroneous detection.
- When a malfunction is detected, engine and driving conditions then are stored in ECM memory as freeze frame data. (For the details, refer to description on Freeze frame data.)
- It is possible to communicate by using not only SUZUKI scan tool (2) but also OBD generic scan tool. (Diagnostic information can be accessed by using a scan tool.)

Warm-up Cycle

A warm-up cycle means sufficient vehicle operation such that the coolant temperature has risen by at least 22 °C (40 °F) from engine starting and reaches a minimum temperature of 70 °C (160 °F).

Driving Cycle

A “Driving Cycle” consists of engine startup, driving mode where a malfunction would be detected if present and engine shutoff.

2 Driving Cycle Detection Logic

The malfunction detected in the first driving cycle is stored in ECM memory (in the form of pending DTC and freeze frame data) but the malfunction indicator lamp does not light at this time. It lights up at the second detection of same malfunction also in the next driving cycle.

Pending DTC

Pending DTC means a DTC detected and stored temporarily at 1 driving cycle of the DTC which is detected in the 2 driving cycle detection logic.

Freeze Frame Data

ECM stores the engine and driving conditions (in the from of data as shown in the figure) at the moment of the detection of a malfunction in its memory. This data is called “Freeze frame data”. Therefore, it is possible to know engine and driving conditions (e.g., whether the engine was warm or not, where the vehicle was running or stopped, where air / fuel mixture was lean or rich) when a malfunction was detected by checking the freeze frame data. Also, ECM has a function to store each freeze frame data for three different malfunctions in the order as each malfunction is detected. Utilizing this function, it is possible to know the order of malfunctions that have been detected. Its use is helpful when rechecking or diagnosing a trouble.

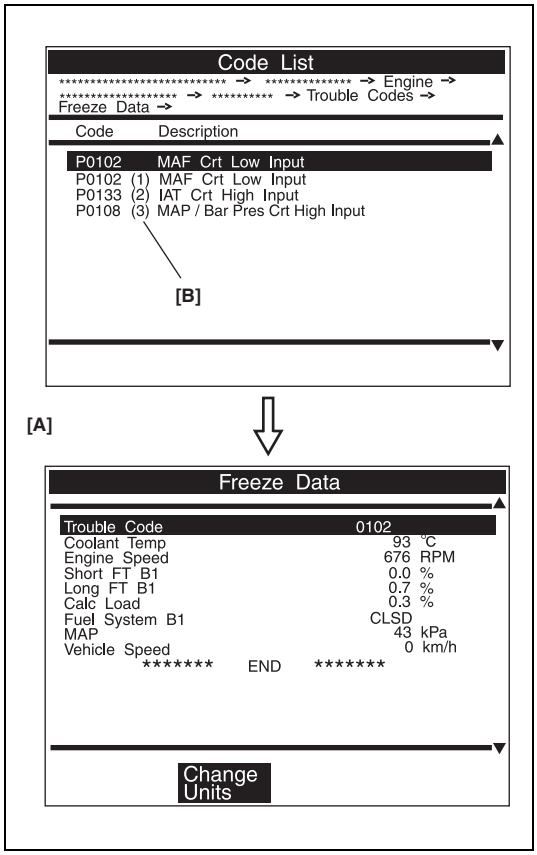

[A]:	An Example of Freeze Frame Data
[B]:	1st, 2nd or 3rd in parentheses here represents which position in the order the malfunction is detected.

Priority of freeze frame data:

ECM has 4 frames where the freeze frame data can be stored. The first frame stores the freeze frame data of the malfunction which was detected first. However, the freeze frame data stored in this frame is updated according to the priority described below. (If malfunction as described in the upper square "1" below is detected while the freeze frame data in the lower square "2" has been stored, the freeze frame data "2" will be updated by the freeze frame data "1".)

PRIORITY	FREEZE FRAME DATA IN FRAME 1
1	Freeze frame data at initial detection of malfunction among misfire detected (P0300 – P0304), fuel system too lean (P0171) and fuel system too rich (P0172)
2	Freeze frame data when a malfunction other than those in "1" above is detected

In the 2nd through the 4th frames, the freeze frame data of each malfunction is stored in the order as each malfunction is detected. These data are not updated.
Shown in the table below are examples of how freeze frame data are stored when two or more malfunctions are detected.

			FRAME			
			FRAME 1	FRAME 2	FRAME 3	FRAME4
			FREEZE FRAME DATA to be updated	1st FREEZE FRAME DATA	2nd FREEZE FRAME DATA	3rd FREEZE FRAME DATA
MALFUNCTION DETECTED ORDER		No malfunction	No freeze frame data			
	1	P0401 (EGR) detected	Data at P0401 detection	Data at P0401 detection	–	–
	2	P0171 (Fuel system) detected	Data at P0171 detection	Data at P0401 detection	Data at P0171 detection	–
	3	P0300 (Misfire) detected	Data at P0171 detection	Data at P0401 detection	Data at P0171 detection	Data at P0300 detection
	4	P0301 (Misfire) detected	Data at P0171 detection	Data at P0401 detection	Data at P0171 detection	Data at P0300 detection

Freeze Frame Data Clearance:

The freeze frame data is cleared at the same time as clearance of diagnostic trouble code (DTC).

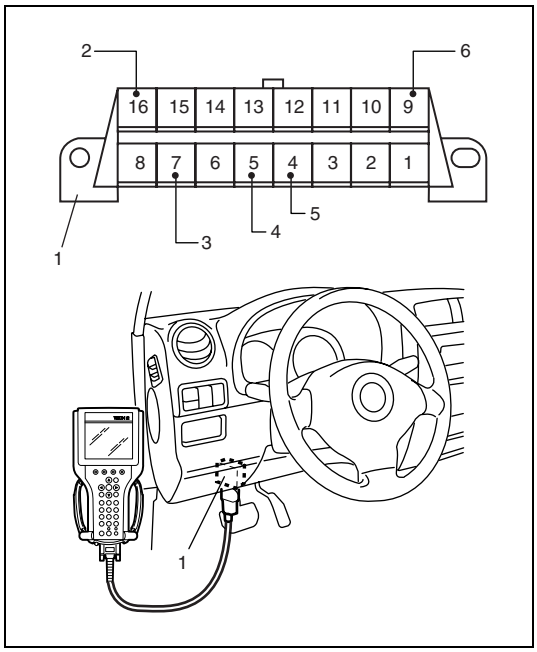

Data Link Connector (DLC)

DLC (1) is in compliance with SAEJ1962 in the shape of connector and pin assignment.
OBD serial data line (K line of ISO 9141) (3) is used for SUZUKI scan tool or OBD generic scan tool to communicate with ECM, TCM, Air Bag SDM and ABS control module.
SUZUKI serial data line (6) is used for SUZUKI scan tool to communicate with immobilizer control module.

2. B+
4. ECM ground
5. Body ground

CAN Communication System Description

ECM (1) and TCM (equipped with A/T) (2) of this vehicle communicate control data between each control module.
Communication of each control module is established by CAN (Controller Area Network) communication system.

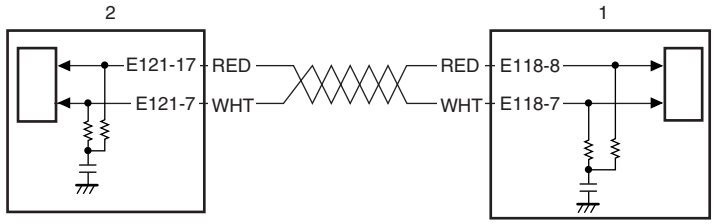

CAN communication system uses the serial communication in which data is transmitted at a high speed. It uses a twisted pair of two communication lines for the high-speed data transmission. As one of its characteristics, multiple control modules can communicate simultaneously. In addition, it has a function to detect a communication error automatically. Each module reads necessary data from the received data and transmits data. ECM communicates control data with each control module as follows.

ECM Transmission Data to TCM

- Engine torque driver requested
- Engine speed
- Top gear inhibit
- Torque converter clutch control inhibit
- Throttle position
- Ignition timing advance for #1 cylinder
- Vehicle speed
- Engine coolant temperature
- Brake pedal switch active
- Air conditioning compressor clutch engaged

ECM Reception Data from TCM

- Torque down ignition delay request
- Transmission torque converter clutch mode
- Transmission turbine angular velocity
- Transmission emissions related malfunction active
- Slope mode
- Transmission gear selector position
- Transmission actual gear
- Transmission oil temperature
- Drive signal

Precaution in Diagnosing Trouble for Engine

- Don't disconnect couplers from ECM, battery cable at battery, ECM ground wire harness from engine or main fuse before confirming diagnostic information (DTC, freeze frame data, etc.) stored in ECM memory. Such disconnection will erase memorized information in ECM memory.
- Diagnostic information stored in ECM memory can be cleared as well as checked by using SUZUKI scan tool or OBD generic scan tool. Before using scan tool, read its Operator's (Instruction) Manual carefully to have good understanding as to what functions are available and how to use it.
  It is indistinguishable which module turns on MIL because not only ECM but also TCM turns on MIL (For details of on-board diagnostic system for A/T, refer to "On-Board Diagnostic System Description" in Section 7B). Therefore, check both ECM and TCM for DTC when MIL lights on.
  When checking ECM for DTC, keep in mind that DTC is displayed on the scan tool as follows depending on the scan tool used.
  – SUZUKI scan tool displays DTC detected by ECM.
  – OBD generic scan tool displays DTC detected by each of ECM and TCM simultaneously.
- Priorities for diagnosing troubles.
  If multiple diagnostic trouble codes (DTCs) are stored, proceed to the flow of the DTC which has been detected earliest in the order and follow the instruction in that flow.
  If no instructions are given, troubleshoot diagnostic trouble codes according to the following priorities.
  – Diagnostic trouble codes (DTCs) other than DTC P0171/P0172 (Fuel system too lean / too rich), DTC P0300/P0301/P0302/P0303/P0304 (Misfire detected) and DTC P0401/P0402 (EGR flow malfunction)
  – DTC P0171/P0172 (Fuel system too lean / too rich) and DTC P0401/P0402 (EGR flow malfunction)
  – DTC P0300/P0301/P0302/P0303/P0304 (Misfire detected)
- Be sure to read "Precautions for Electrical Circuit Service" in Section 0A before inspection and observe what is written there.
- ECM Replacement
  When substituting a known-good ECM, check for following conditions. Neglecting this check may cause damage to a known-good ECM.
  – Resistance value of all relays, actuators is as specified respectively.
  – MAP sensor and TP sensor are in good condition and none of power circuits of these sensors is shorted to ground.
- Communication of ECM and TCM, is established by CAN (Controller Area Network). (For detail of CAN communication for ECM referring to "CAN Communication System Description" in this section). Therefore, handle CAN communication line with care, refer to "Precautions for CAN Communication System" in Section 0A.
- ECM/immobilizer code registration after replacement ECM
  When ECM is replaced with new one or with another one, make sure to register ECM/immobilizer code to ECM correctly according to "Procedure After ECM Replacement" in Section 8G.

Engine and Emission Control System Check

Refer to the following items for the details of each step.

Step	Action	Yes	No
1	Customer Complaint Analysis 1) Perform customer complaint analysis referring to the followings. Was customer complaint analysis performed?	Go to Step 2.	Perform customer complaint analysis.
2	Diagnostic Trouble Code (DTC) and Freeze Frame Data Check, Record and Clearance 1) Check for DTC (including pending DTC) referring to the followings. Is there any DTC(s)?	Print DTC and freeze frame data or write them down and clear them by referring to “Diagnostic Trouble Code (DTC) Clearance” in this section, and go to Step 3.	Go to Step 4.
3	Visual Inspection 1) Perform visual inspection referring to the followings. Is there any faulty condition?	Repair or replace malfunction part, and go to Step 11.	Go to Step 5.
4	Visual Inspection 1) Perform visual inspection referring to the followings. Is there any faulty condition?		Go to Step 8.
5	Trouble Symptom Confirmation 1) Confirm trouble symptom referring to the followings. Is trouble symptom identified?	Go to Step 6.	Go to Step 7.
6	Rechecking and Record of DTC / Freeze Frame Data 1) Recheck for DTC and freeze frame data referring to “Diagnostic Trouble Code (DTC) Check” in this section. Is there any DTC(s)?	Go to Step 9.	Go to Step 8.
7	Rechecking and Record of DTC / Freeze Frame Data 1) Recheck for DTC and freeze frame data referring to “Diagnostic Trouble Code (DTC) Check” in this section. Is there any DTC(s)?		Go to Step 10.
8	Engine Basic Inspection and Engine Symptom Diagnosis 1) Check and repair according to “Engine Basic Inspection” and “Engine Symptom Diagnosis” in this section. Are check and repair complete?	Go to Step 11.	Check and repair malfunction part(s), and go to Step 11.
9	Trouble shooting for DTC 1) Check and repair according to applicable DTC diag. flow. Are check and repair complete?		
10	Check for Intermittent Problems 1) Check for intermittent problems referring to the followings. Is there any faulty condition?	Repair or replace malfunction part(s), and go to Step 11.	Go to Step 11.
11	Final Confirmation Test 1) Clear DTC if any. 2) Perform final confirmation test referring to the followings. Is there any problem symptom, DTC or abnormal condition?	Go to Step 6.	End.

1. CUSTOMER COMPLAINT ANALYSIS

Record details of the problem (failure, complaint) and how it occurred as described by the customer. For this purpose, use of such an inspection form will facilitate collecting information to the point required for proper analysis and diagnosis.

2. DIAGNOSTIC TROUBLE CODE (DTC) / FREEZE FRAME DATA CHECK, RECORD AND CLEARANCE

First, check DTC (including pending DTC), referring to "Diagnosis Trouble Code (DTC) check" in this section. If DTC is indicated, print it and freeze frame data or write them down and then clear them by referring to "Diagnosis Trouble Code (DTC) clearance" in this section. DTC indicates malfunction that occurred in the system but does not indicate whether it exists now or it occurred in the past and the normal condition has been restored now. To check which case applies, check the symptom in question according to Step 5 and recheck DTC according to Step 6 and 7.

Attempt to diagnose a trouble based on DTC in this step only or failure to clear the DTC in this step will lead to incorrect diagnosis, trouble diagnosis of a normal circuit or difficulty in troubleshooting.

NOTE:

If only Automatic transmission DTCs (P0705 – P2770) or Immobilizer DTCs (P1620 – P1623) are indicated in this step, perform trouble diagnosis according to "Diagnostic Trouble Code (DTC) Table" in Section 7B or "Diagnostic Trouble Code Table" in Section 8G.

3. AND 4. VISUAL INSPECTION

As a preliminary step, be sure to perform visual check of the items that support proper function of the engine referring to "Visual Inspection" in this section.

5. TROUBLE SYMPTOM CONFIRMATION

Based on information obtained in Step 1 Customer complaint analysis and Step 2 DTC / freeze frame data check, confirm trouble symptoms. Also, reconfirm DTC according to "DTC Confirmation Procedure" described in each DTC Diagnosis Flow.

6. AND 7. RECHECKING AND RECORD OF DTC / FREEZE FRAME DATA

Refer to "Diagnosis Trouble Code (DTC) Check" in this section for checking procedure.

8. ENGINE BASIC INSPECTION AND ENGINE SYMPTOM DIAGNOSIS

Perform basic engine check according to the "Engine Basic Inspection" first. When the end of the flow has been reached, check the parts of the system suspected as a possible cause referring to "Engine Symptom Diagnosis" and based on symptoms appearing on the vehicle (symptoms obtained through steps of customer complaint analysis, trouble symptom confirmation and / or basic engine check) and repair or replace faulty parts, if any.

9. TROUBLESHOOTING FOR DTC (SEE EACH DTC DIAG. FLOW)

Based on the DTC indicated in Step 6 or 7 and referring to the applicable DTC diag. flow in this section, locate the cause of the trouble, namely in a sensor, switch, wire harness, connector, actuator, ECM or other part and repair or replace faulty parts.

10. CHECK FOR INTERMITTENT PROBLEM

Check parts where an intermittent trouble is easy to occur (e.g., wire harness, connector, etc.), referring to "Intermittent and Poor Connection" in Section 0A and related circuit of DTC recorded in Step 2.

11. FINAL CONFIRMATION TEST

Confirm that the problem symptom has gone and the engine is free from any abnormal conditions. If what has been repaired is related to the DTC, clear the DTC once, perform DTC confirmation procedure and confirm that no DTC is indicated.

Customer Problem Inspection Form (Example)

User name:	Model:	VIN:	
Date of issue:	Date Reg.	Date of problem:	Mileage:

PROBLEM SYMPTOMS	
☐ **Difficult Starting** ☐ No cranking ☐ No initial combustion ☐ No combustion ☐ Poor starting at (☐cold ☐warm ☐always) ☐ Other_____	☐ **Poor Driveability** ☐ Hesitation on acceleration ☐ Back fire/☐After fire ☐ Lack of power ☐ Surging ☐ abnormal knocking ☐ Other_____
☐ **Poor Idling** ☐ Poor fast idle ☐ Abnormal idling speed (☐High ☐Low) (r/min.) ☐ Unstable ☐ Hunting (r/min. to r/min.) ☐ Other_____	☐ **Engine Stall when** ☐ Immediately after start ☐ Accel. pedal is depressed ☐ Accel. pedal is released ☐ Load is applied ☐ A/C ☐Electric load ☐P/S ☐ Other_____ ☐ Other_____
☐ OTHERS:	

VEHICLE/ENVIRONMENTAL CONDITION WHEN PROBLEM OCCURS	
Environmental Condition	
Weather Temperature Frequency Road	☐Fair ☐Cloudy ☐Rain ☐Snow ☐Always ☐Other_____ ☐Hot ☐Warm ☐Cool ☐Cold (°F/ °C) ☐Always ☐Always ☐Sometimes (times/ day, month) ☐Only once ☐Under certain condition ☐Urban ☐Suburb ☐Highway ☐Mountainous (☐Uphill ☐Downhill) ☐Tarmacadam ☐Gravel ☐Other_____
Vehicle Condition	
Engine condition	☐Cold ☐Warming up phase ☐Warmed up ☐Always ☐Other at starting ☐Immediately after start ☐Racing without load ☐Engine speed (r/min)
Vehicle condition	During driving: ☐Constant speed ☐Accelerating ☐Decelerating ☐Right hand corner ☐Left hand corner ☐When shifting (Lever position) ☐At stop ☐Vehicle speed when problem occurs (km/h, Mile/h) ☐Other

Malfunction indicator lamp condition	☐Always ON ☐Sometimes ON ☐Always OFF ☐Good condition
Diagnostic trouble code	First check: ☐No code ☐Malfunction code ( )
	Second check: ☐No code ☐Malfunction code ( )

NOTE:

The above form is a standard sample. It should be modified according to conditions characteristic of each market.

Malfunction Indicator Lamp (MIL) Check

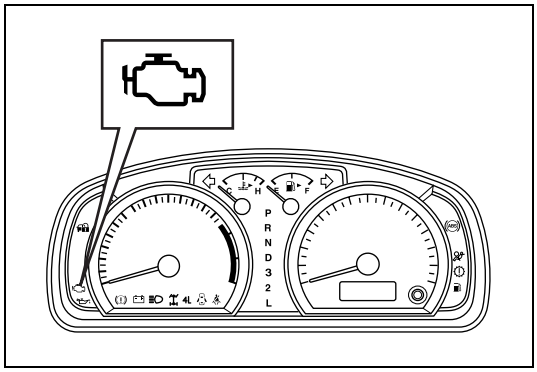

1) Turn ON ignition switch (but the engine at stop) and check that MIL lights.
   If MIL does not light up (or MIL dims) but engine can be starting, go to "Table A-1 Malfunction Indicator Lamp Circuit Check – Lamp Does Not Come "ON" with Ignition Switch ON (But Engine Stops)" for troubleshooting.
   If MIL does not light with ignition switch ON and engine does not start though it is cranked up, go to "Table A-3 ECM Power and Ground Circuit Check – MIL Doesn't Light with Ignition Switch ON and Engine Doesn't Start Though It Is Cranked Up" for troubleshooting.
2) Start engine and check that MIL turns OFF.
   If MIL remains ON and no DTC is stored in ECM, go to "Table A-2 Malfunction Indicator Lamp Circuit Check – Lamp Remains "ON" after Engine Starts" for troubleshooting.

Diagnostic Trouble Code (DTC) Check

NOTE:

The MIL is turned on when the ECM and/or TCM detect malfunction(s). Each ECM and TCM stores diagnostic information as the diagnostic trouble code (DTC) in its memory and outputs the DTC to the scan tool.
Therefore, check both of the ECM and TCM for any DTC with the scan tool because the DTC stored in ECM and TCM is not read and displayed at a time. However, each of the ECM and TCM needs not to be checked with the generic scan tool because the DTC stored in ECM and TCM is read and displayed at a time.

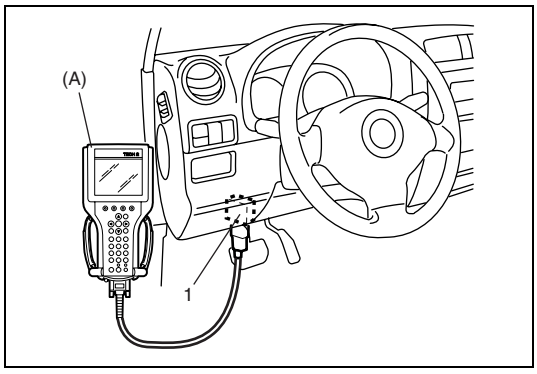

1) Prepare OBD generic scan tool or SUZUKI scan tool.
2) With ignition switch turned OFF, connect it to data link connector (DLC) (1) located on underside of instrument panel at driver's seat side.

Special tool
(A): SUZUKI scan tool

3) Turn ignition switch ON and confirm that MIL lights.
4) Read DTC, pending DTC and freeze frame data according to instructions displayed on scan tool and print them or write them down.
   Refer to scan tool operator's manual for further details.
   If communication between scan tool and ECM is not possible, check if scan tool is communicable by connecting it to ECM in another vehicle. If communication is possible in this case, scan tool is in good condition. Then check data link connector and serial data line (circuit) in the vehicle with which communication was not possible.
   If connector and circuit are OK, check that power supply and ground circuits of ECM and DLC are in good condition referring to "Table A-3 ECM Power and Ground Circuit Check – MIL Doesn't Light with Ignition Switch ON and Engine Doesn't Start Though It Is Cranked Up" in this section.
5) After completing the check, turn ignition switch off and disconnect scan tool from data link connector.

Diagnostic Trouble Code (DTC) Clearance

[Using Scan Tool]

1) Connect OBD generic scan tool or SUZUKI scan tool to data link connector in the same manner as when making this connection for DTC check.
2) Turn ignition switch ON.
3) Erase DTC and pending DTC according to instructions displayed on scan tool. Refer to scan tool operator's manual for further details.
4) After completing the clearance, turn ignition switch off and disconnect scan tool from data link connector.

NOTE:

DTC and freeze frame data stored in ECM memory are also cleared in following cases. Be careful not to clear them before keeping their record.

- **When power to ECM is cut off (by disconnecting battery cable, removing fuse or disconnecting ECM connectors)**
- **When the same malfunction (DTC) is not detected again during 40 engine warm-up cycles (See "Warm-up Cycle" under "On-Board Diagnostic System Description" in this section).**

[Without Using Scan Tool]

1) Turn the ignition switch OFF position.
2) Disconnect battery negative cable for specified time below to erase diagnostic trouble code stored in ECM memory and reconnect it.

Time required to erase DTC

Ambient temperature	Time to cut power to ECM
Over 0 °C (32 °F)	**30 sec. or longer**
Under 0 °C (32 °F)	**Not specifiable. Select a place with higher than 0 °C (32 °F) temperature.**

Diagnostic Trouble Code (DTC) Table

DTC No.	Detecting Item	Detecting Condition (DTC will set when detecting:)	MIL
P0010	Camshaft position actuator circuit	Oil control valve circuit open or short.	1 driving cycle
P0011	Camshaft position – timing over-advanced or system performance	Actual value of advanced valve timing does not reach target value, or valve timing is advanced although ECM command is most retarding.	2 driving cycles
P0012	Camshaft position – timing over-retarded		2 driving cycles
P0031	HO2S heater control circuit low (Sensor-1)	Heater current is less than specification while heater ON.	2 driving cycles
P0032	HO2S heater control circuit high (Sensor-1)	Heater current is more than specification while heater ON.	2 driving cycles
P0037	HO2S heater control circuit low (Sensor-2)	Heater current is less than specification while heater ON.	2 driving cycles
P0038	HO2S heater control circuit high (Sensor-2)	Heater current is more than specification while heater ON.	2 driving cycles
P0101	Mass air flow circuit range/ performance	MAF sensor volume is more than specification or less than specification.	2 driving cycles
P0102	Mass air flow circuit low input	Output voltage of MAF sensor is less than specification.	1 driving cycle
P0103	Mass air flow circuit high input	Output voltage of MAF sensor is more than specification.	1 driving cycle
P0106	Manifold absolute pressure circuit range/performance	Difference between Max. manifold absolute pressure value and Min. manifold pressure value is less than specification or difference between barometric pressure value and manifold pressure value is less than specification.	2 driving cycles
P0107	Manifold absolute pressure circuit low input	Output voltage of MAP sensor is less than specification.	1 driving cycle
P0108	Manifold absolute pressure circuit high input	Output voltage of MAP sensor is more than specification.	1 driving cycle
P0111	Intake air temperature sensor circuit range/performance	Variation of intake air temperature from engine start is less than specified temperature.	2 driving cycles
P0112	Intake air temperature sensor circuit low	Circuit voltage of IAT sensor is less than specification.	1 driving cycle
P0113	Intake air temperature sensor circuit high	Circuit voltage of IAT sensor is more than specification.	1 driving cycle
P0116	Engine coolant temperature circuit range/performance	Engine coolant temperature is less than specified temperature for specified time from engine start.	2 driving cycles
P0117	Engine coolant temperature circuit low	Circuit voltage of ECT sensor is less than specification.	1 driving cycle
P0118	Engine coolant temperature circuit high	Circuit voltage of ECT sensor is more than specification.	1 driving cycle
P0121	Throttle position sensor circuit range/performance	Difference between actual throttle opening and opening calculated by ECM is out of specification.	2 driving cycles
P0122	Throttle position sensor circuit low	Output voltage of TP sensor is less than specification.	1 driving cycle

DTC No.	Detecting Item	Detecting Condition (DTC will set when detecting:)	MIL
P0123	Throttle position sensor circuit high	Output voltage of TP sensor is more than specification.	1 driving cycle
P0131	O2 sensor (HO2S) circuit low voltage (Sensor-1)	Max. output voltage of HO2S-1 is less than specification.	2 driving cycles
P0132	O2 sensor (HO2S) circuit high voltage (Sensor-1)	Min. output voltage of HO2S-1 is more than specification.	2 driving cycles
P0133	O2 sensor (HO2S) circuit slow response (Sensor-1)	Response time of HO2S-1 output voltage between rich and lean is longer than specification.	2 driving cycles
P0134	O2 sensor (HO2S) circuit no activity detected (Sensor-1)	Output voltage of HO2S-1 is more than specification or less than specification. (or HO2S-1 circuit open or short)	2 driving cycles
P0140	O2 sensor (HO2S) circuit no activity detected (Sensor-2)	Output voltage of HO2S-2 is more than specification after warming up engine.	2 driving cycles
P0171	System too lean	Total fuel trim is larger than specification for specified time or longer. (Fuel trim toward rich side is large.)	2 driving cycles
P0172	System too rich	Total fuel trim is smaller than specification for specified time or longer. (Fuel trim toward lean side is large.)	2 driving cycles
P0300	Random misfire detected	Misfire of such level as to cause damage to three way catalyst.	*2 driving cycles
P0301 P0302 P0303 P0304	Cylinder 1 misfire detected Cylinder 2 misfire detected Cylinder 3 misfire detected Cylinder 4 misfire detected	Misfire of such level as to deteriorate emission but not to cause damage to three way catalyst.	*2 driving cycles
P0327	Knock sensor circuit low	Output voltage of knock sensor is less than specification.	1 driving cycle
P0328	Knock sensor circuit high	Output voltage of knock sensor is more than specification.	1 driving cycle
P0335	Crankshaft position sensor circuit	No signal of CKP sensor for specified time even if starting motor signal is inputting.	1 driving cycle
P0340	Camshaft position sensor circuit	CMP sensor pulse is out of specification.	1 driving cycle
P0401	Exhaust gas recirculation flow insufficient detected	Difference in intake manifold absolute pressure between opened EGR valve and closed EGR valve is less than specification.	2 driving cycles
P0402	Exhaust gas recirculation flow excessive detected	Difference in intake manifold absolute pressure between opened EGR valve and closed EGR valve is more than specification.	2 driving cycles
P0403	Exhaust gas recirculation control circuit	Output voltage is different from output command with more than one pole out of 4 poles.	1 driving cycle
P0420	Catalyst system efficiency below threshold	Output waveforms of HO2S-1 and HO2S-2 are similar.	2 driving cycles
P0443	Evaporative emission system purge control valve circuit	Monitor signal of EVAP canister purge valve is different from command signal. (circuit open or shorted to ground)	2 driving cycles
P0481	Fan 2 (A/C condenser fan) control circuit	Monitor signal of A/C condenser fan relay is different from command signal.	2 driving cycles
P0500	Vehicle speed sensor (VSS) malfunction	No VSS signal during fuel cut for specified time or longer, or VSS signal is not input even if vehicle is driving with more than specified engine speed and D-range (A/T).	2 driving cycles

DTC No.	Detecting Item	Detecting Condition (DTC will set when detecting:)	MIL
P0505	Idle air control system	IAC control duty pulse is not detected in its monitor signal.	2 driving cycles
P0601	Internal control module memory check sum error	Data write error or check sum error.	1 driving cycle
P0602	Control module programming error	Data programming error.	1 driving cycle
P0616	Starter relay circuit low	Starter signal is low voltage even though engine is started with vehicle at stop.	2 driving cycles
P0617	Starter relay circuit high	Starter signal is high voltage for specified time while engine is running.	2 driving cycles
P1510	ECM backup power supply malfunction	Backup power voltage is out of specification after starting engine.	1 driving cycle
P1570	ABS signal circuit malfunction	ABS signal ON (low voltage) when engine start.	1 driving cycle
P1603	TCM trouble code detected	When ECM receives a trouble code from TCM, which indicates that some problem occurred in sensor circuits and its calculated values used for operations such as idle speed control, engine power control and so on by TCM, this DTC is detected by ECM.	1 driving cycle
P1674	CAN communication (buss off error)	Transmission error that is inconsistent between transmission data and transmission monitor (CAN bus monitor) data is detected more than 7 times continuously.	1 driving cycle
P1675	CAN communication (transmission error)	Transmission error of communication data for ECM is detected more than specified time continuously.	1 driving cycle
P1676	CAN communication (reception error for TCM)	Reception error of communication data for TCM is detected more than specified time continuously.	1 driving cycle
P2227	Barometric pressure circuit range/performance	Difference of barometric pressure value and intake manifold pressure value is more than specification at engine start.	2 driving cycles
P2228	Barometric pressure circuit low	Barometric pressure sensor voltage is less than specification.	1 driving cycle
P2229	Barometric pressure circuit high	Barometric pressure sensor voltage is more than specification.	1 driving cycle
P1620	ECU code not registered	Refer to “Diagnostic Trouble Code Table” in Section 8G.	
P1621	No ECU code transmitted from Immobilizer Control Module		
P1622	Faulty in ECM		
P1623	ECU code not matched		

NOTE:

- **1 driving cycle: MIL lights up when DTC is detected during 1 driving cycle.**
- **2 driving cycles: MIL lights up when the same DTC is detected also in the next driving cycle after DTC is detected and stored temporarily in the first driving cycle.**
- ***2 driving cycles:**
  MIL blinks or lights up. Refer to “DTC P0300 / P0301 / P0302 / P0303 / P0304 Random Misfire Detected / Cylinder 1 / Cylinder 2 / Cylinder 3 / Cylinder 4 Misfire Detected” for details.

For Vehicle Equipped with A/T

When using OBD generic scan tool, not only the previous DTC(s) but also the following DTC(s) is displayed on OBD generic scan tool simultaneously.

DTC No.	Detecting Item	Detecting Condition (DTC will set when detecting:)	MIL
P0705	Transmission range sensor circuit malfunction (PRNDL input)	Refer to “Diagnostic Trouble Code (DTC) Table” in Section 7B.	
P707	Transmission range sensor circuit low		
P0712	Transmission fluid temperature sensor “A” circuit low		
P0713	Transmission fluid temperature sensor “A” circuit high		
P0717	Input / turbine speed sensor circuit no signal		
P0722	Output speed sensor circuit no signal		
P0741	Torque converter clutch circuit performance or stuck off		
P0742	Torque converter clutch circuit stuck on		
P0751	Shift solenoid “A” performance or stuck off		
P0752	Shift solenoid “A” stuck on		
P0756	Shift solenoid “B” performance or stuck off		
P0757	Shift solenoid “B” stuck on		
P0787	Shift/Timing solenoid control circuit low		
P0788	Shift/Timing solenoid control circuit high		
P0962	Pressure control solenoid “A” control circuit low		
P0963	Pressure control solenoid “A” control circuit high		
P0973	Shift solenoid “A” control circuit low		
P0974	Shift solenoid “A” control circuit high		
P0976	Shift solenoid “B” control circuit low		
P0977	Shift solenoid “B” control circuit high		
P1703	CAN invalid data – TCM		
P1723	Range select switch malfunction		
P1774	Control module communication bus off		
P1775	High speed CAN communication bus off (Transmission error)		
P1777	TCM lost communication with ECM (Reception error)		
P1887	T/F output speed circuit malfunction		
P2769	Torque converter clutch circuit low		
P2770	Torque converter clutch circuit high		

Fail-Safe Table

When any of the following DTCs is detected, ECM enters fail-safe mode as long as malfunction continues to exist but that mode is canceled when ECM detects normal condition after that.

DTC No.	Detected Item	Fail-safe Operation
P0102	Mass air flow circuit low input	• ECM controls injector drive time (fuel injection volume) according to throttle valve opening (closed throttle position or not). • ECM stops EGR control.
P0103	Mass air flow circuit high input	
P0112	Intake air temperature sensor circuit low	ECM controls actuators assuming that intake air temperature is 20 °C (68 °F).
P0113	Intake air temperature sensor circuit high	
P0117	Engine coolant temperature circuit low	• ECM controls actuators assuming that engine coolant temperature is 80 °C (176 °F). • ECM operates radiator cooling fan.
P0118	Engine coolant temperature circuit high	
P0122	Throttle position sensor circuit low input	ECM controls actuators assuming that throttle opening is about 20°.
P0123	Throttle position sensor circuit high input	
P0335	Crankshaft position sensor circuit	• Ignition timing is fixed. • ECM changes injection control system from sequential injection to simultaneous one.
P0340	Camshaft position sensor circuit	ECM changes injection control system from sequential injection to simultaneous one.
P0500	Vehicle speed sensor	• ECM controls actuators assuming that vehicle speed is 0 km/h (0 mile/h). • ECM stops IAC feedback control.
P2227	Barometric pressure sensor performance problem	ECM controls actuators assuming that barometric pressure is 101.33 kPa (762 mmHg).

Visual Inspection

Visually check following parts and systems.

INSPECTION ITEM	REFERRING SECTION
• Engine oil – level, leakage	"Engine Oil and Filter" in Section 0B
• Engine coolant – level, leakage	"Engine Coolant" in Section 0B
• Fuel – level, leakage	"Fuel System" in Section 0B
• A/T fluid – level, leakage	"Automatic Transmission Fluid" in Section 0B
• Air cleaner element – dirt, clogging	"Air Cleaner Filter" in Section 0B
• Battery – fluid level, corrosion of terminal	
• Water pump belt – tension, damage	"Drive Belt" in Section 0B
• Throttle cable – play, installation	"Accelerator Cable Adjustment" in Section 6E
• Vacuum hoses of air intake system – disconnection, looseness, deterioration, bend	"Evaporative Emission (EVAP) Control System" in Section 6E
• Connectors of electric wire harness – disconnection, friction	
• Fuses – burning	
• Parts – installation, bolt – looseness	
• Parts – deformation	
• Other parts that can be checked visually	
Also check following items at engine start, if possible	
• Malfunction indicator lamp – operation	"Malfunction Indicator Lamp (MIL) Check" in this section
• Charge warning lamp – operation	"Faulty Indicator Lamp Operation" under "Generator" in Section 6H
• Engine oil pressure warning lamp – operation	"Oil Pressure Light" in Section 8 ("Oil Pressure Check" in Section 6A3)
• Engine coolant temp. meter – operation	"Engine Coolant Temp. (ECT) Meter and ECT Sensor" in Section 8
• Fuel level meter – operation	"Fuel Meter and Fuel Gauge Unit" in Section 8
• Tachometer – operation	"Tachometer and ECM" in Section 8
• Abnormal air being inhaled from air intake system	
• Exhaust system – leakage of exhaust gas, noise	
• Other parts that can be checked visually	

Engine Basic Inspection

This check is very important for troubleshooting when ECM has detected no DTC and no abnormality has been found in visual inspection.
Follow the flow carefully.

Step	Action	Yes	No
1	Was “Engine and Emission Control System Check” performed?	Go to Step 2.	Go to “Engine and Emission Control System Check”.
2	Check battery voltage. Is it 11 V or more?	Go to Step 3.	Charge or replace battery.
3	Is engine cranked?	Go to Step 4.	Go to “Diagnosis Table” in Section 6G.
4	Does engine start?	Go to Step 5.	Go to Step 9.
5	Check idle speed as follows: 1) Warm up engine to normal operating temp. 2) Shift transmission to neutral position for M/T (“P” position for A/T). 3) Make sure that all electrical loads are switched off. 4) Check engine idle speed with scan tool. See Fig. 1. Is it 625 – 725 r/min (650 – 750 r/min. for A/T vehicle)?	Go to Step 6.	Go to “Engine Symptom Diagnosis”.
6	Is SUZUKI scan tool available?	Go to Step 8.	Go to Step 7.
7	Check ignition timing as follows: 1) Connect test switch terminal (2) of monitor coupler (1) to ground. See Fig. 2. 2) Using timing light (1), check initial ignition timing. See Fig. 4. Is it 5° ± 3° BTDC at specified idle speed?	Go to “Engine Diagnosis Table”.	Check ignition control related parts referring to “Ignition Timing” in Section 6F.
8	Check ignition timing as follows: 1) Select “Misc Test” mode on SUZUKI scan tool and fix ignition timing to initial one. See Fig. 3. 2) Using timing light (1), check initial ignition timing. See Fig. 4. Is it 5° ± 3° BTDC at specified idle speed?	Go to “Engine Diagnosis Table”.	Check ignition control related parts referring to “Ignition Timing” in Section 6F.
9	Check immobilizer system malfunction as follows: 1) Check immobilizer indicator lamp for flashing. Is it flashing when ignition switch is turned to ON position?	Go to “Diagnostic Trouble Code (DTC) Check” in Section 8G.	Go to Step 10.
10	Check fuel supply as follows: 1) Check to make sure that enough fuel is filled in fuel tank. 2) Turn ON ignition switch for 2 seconds and then OFF. See Fig. 5. 3) Repeat Step 2) a few time. Is fuel return pressure felt from fuel feed hose (1) when ignition switch is turned ON?	Go to Step 12.	Go to Step 11.

Step	Action	Yes	No
11	Check fuel pump for operation: 1) Was fuel pump operating sound heard from fuel filler for about 2 seconds after ignition switch ON and stop?	Go to “Table B-3 Fuel Pressure Check”.	Go to “Table B-2 Fuel Pump and Its Circuit Check”.
12	Check ignition spark as follows: 1) Disconnect injector couplers. 2) Remove spark plugs and connect them to high tension cords or ignition coil assemblies. 3) Ground spark plugs. 4) Crank engine and check if each spark plug sparks. Is it in good condition?	Go to Step 13.	Go to “Ignition Spark Test” in Section 6F.
13	Check fuel injector for operation as follows: 1) Install spark plugs and connect injector connectors. 2) Using sound scope (2), check operating sound of each injector (3) when cranking engine. See Fig. 6. Was injector operating sound heard from all injectors?	Go to “Engine Symptom Diagnosis”.	Go to “Table B-1 fuel Injector Circuit Check”.

[A] Fig. 1 for Step 5 / [B] Fig. 2 for Step 7 / [C] Fig. 3 for Step 8

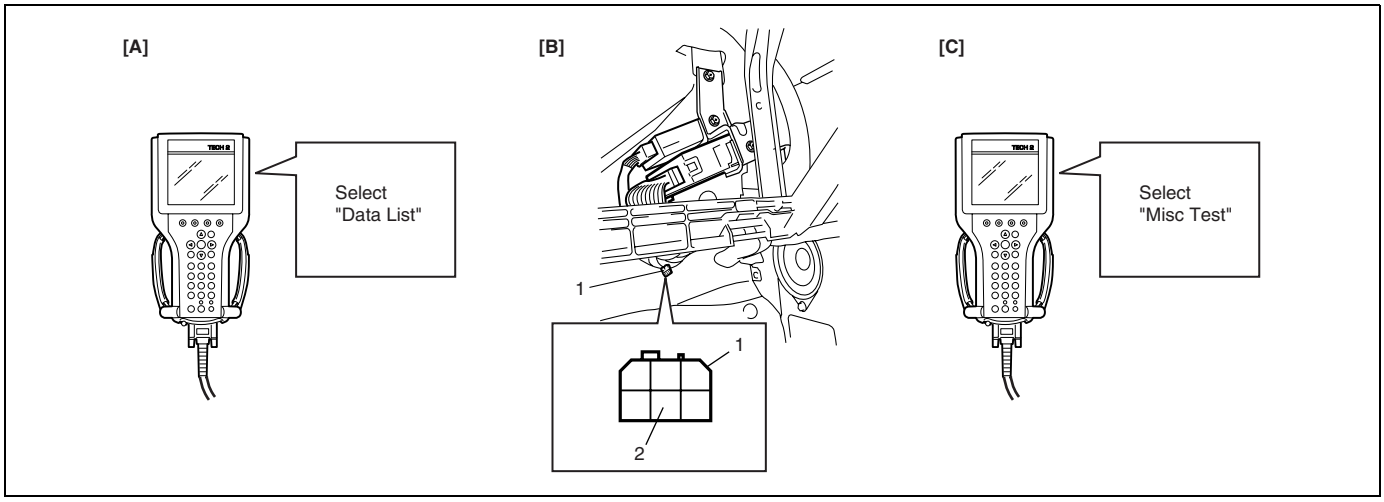

[B]: When not using SUZUKI scan tool
[C]: When using SUZUKI scan tool

[D] Fig. 4 for Step 7 or 8 / [E] Fig. 5 for Step 10 / [F] Fig. 6 for Step 13

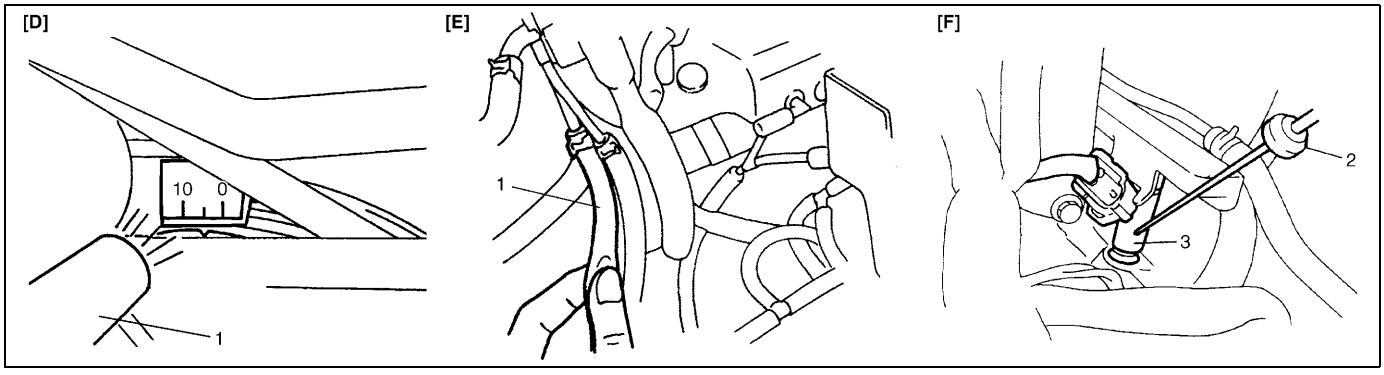

Engine Symptom Diagnosis

Perform troubleshooting referring to following table when ECM has no DTC and no abnormality found in visual inspection and engine basic inspection previously.

Condition	Possible Cause	Reference Item
Hard Starting (Engine cranks OK)	Faulty spark plug	"Spark Plugs" in Section 6F.
	Leaky high-tension cord	"High-tension Cords" in Section 6F.
	Loose connection or disconnection of high-tension cords or lead wires	"High-tension Cords" in Section 6F.
	Faulty ignition coil	"Ignition Coil Assembly (Including Ignitor)" in Section 6F.
	Dirty or clogged fuel hose or pipe	"Table B-3 Fuel Pressure Check" in this section.
	Malfunctioning fuel pump	"Table B-2 Fuel Pump and Its Circuit Check" in this section.
	Air inhaling from intake manifold gasket or throttle body gasket	
	Faulty idle air control system	"Table B-4 Idle Air Control System Check" in this section.
	Faulty ECT sensor or MAF sensor	"Engine Coolant Temperature Sensor (ECT Sensor)" or "Mass Air Flow (MAF) and Intake Air Temperature (IAT) Sensor (Engine Equipped with VVT System)" in Section 6E.
	Faulty ECM	
	Low compression	"Compression Check" in Section 6A3.
	Poor spark plug tightening or faulty gasket	"Spark Plugs" in Section 6F.
	Compression leak from valve seat	"Valves and Cylinder Head" in Section 6A3.
	Sticky valve stem	"Valves and Cylinder Head" in Section 6A3.
	Weak or damaged valve springs	"Valves and Cylinder Head" in Section 6A3.
	Compression leak at cylinder head gasket	"Valves and Cylinder Head" in Section 6A3.
	Sticking or damaged piston ring	"Pistons, Piston rings, Connecting Rods and Cylinders" in Section 6A3.
	Worn piston, ring or cylinder	"Pistons, Piston rings, Connecting Rods and Cylinders" in Section 6A3.
	Malfunctioning PCV valve	"PCV System" in Section 6E.
	Camshaft position control (VVT) system out of order	"Timing Chan Cover" in Section 6A3.
	Faulty EGR system	"EGR Valve in Section" 6E.

Condition	Possible Cause	Reference Item
Low oil pressure	Improper oil viscosity	"Engine Oil and Filter" in Section 0B.
	Malfunctioning oil pressure switch	"Oil Pressure Switch" in Section 8.
	Clogged oil strainer	"Oil Pan and Oil Pump Strainer" in Section 6A3.
	Functional deterioration of oil pump	"Oil Pan and Oil Pump Strainer" in Section 6A3.
	Worn oil pump relief valve	"Oil Pan and Oil Pump Strainer" in Section 6A3.
	Excessive clearance in various sliding parts	
Engine noise – Valve noise **Note: Before checking mechanical noise, make sure that: Specified spark plug is used. Specified fuel is used.**	Improper valve lash	"Valves and Cylinder Head" in Section 6A3.
	Worn valve stem and guide	"Valves and Cylinder Head" in Section 6A3.
	Weak or broken valve spring	"Valves and Cylinder Head" in Section 6A3.
	Warped or bent valve	"Valves and Cylinder Head" in Section 6A3.
Engine noise – Piston, ring and cylinder noise **Note: Before checking mechanical noise, make sure that: Specified spark plug is used. Specified fuel is used.**	Worn piston, ring cylinder bore	"Pistons, Piston rings, Connecting Rods and Cylinders" in Section 6A3.
Engine noise – Connecting rod noise **Note: Before checking mechanical noise, make sure that: Specified spark plug is used. Specified fuel is used.**	Worn piston, ring cylinder bore	"Pistons, Piston rings, Connecting Rods and Cylinders" in Section 6A3.
	Worn rod bearing	"Pistons, Piston rings, Connecting Rods and Cylinders" in Section 6A3.
	Worn crank pin	"Pistons, Piston rings, Connecting Rods and Cylinders" in Section 6A3.
	Loose connecting rod nuts	"Pistons, Piston rings, Connecting Roes and Cylinders" in Section 6A3.
	Low oil pressure	"Low Oil Pressure" in this table.
Engine noise – Crankshaft noise **Note: Before checking mechanical noise, make sure that: Specified spark plug is used. Specified fuel is used.**	Low oil pressure	"Low Oil Pressure" in this table.
	Worn bearing	"Main bearings, Crankshaft and Cylinder Block" in Section 6A3.
	Worn crankshaft journal	"Main bearings, Crankshaft and Cylinder Block" in Section 6A3.
	Loose bearing cap bolts	"Main bearings, Crankshaft and Cylinder Block" in Section 6A3.
	Excessive crankshaft thrust play	"Main bearings, Crankshaft and Cylinder Block" in Section 6A3.

Condition	Possible Cause	Reference Item
Overheating	Inoperative thermostat	"Thermostat" in Section 6B.
	Poor water pump performance	"Water Pump" in Section 6B.
	Clogged or leaky radiator	"Radiator" in Section 6B.
	Improper engine oil grade	"Engine Oil and Filter" in Section 0B.
	Clogged oil filter or oil strainer	"Oil Pressure Check" in Section 6A3.
	Poor oil pump performance	"Oil Pressure Check" in Section 6A3.
	Faulty A/C condenser fan control system	"Table B-5 A/C System Circuit Check" in this section.
	Faulty radiator cooling fan clutch	"Water Pump Belt and Cooling Fan" in Section 6B.
	Dragging brakes	"Diagnosis Table" in Section 5.
	Slipping clutch	"Diagnosis Table" in Section 7C.
	Blown cylinder head gasket	"Valves and Cylinder Head" in Section 6A3.
Poor gasoline mileage	Leaks or loose connection of high-tension cord	"High-tension Cords" in Section 6F.
	Faulty spark plug (improper gap, heavy deposits and burned electrodes, etc.)	"Spark Plugs" in Section 6F.
	Malfunctioning EGR valve	"EGR Valve" Section 6E.
	High idle speed	"Improper Engine Idling or Engine Fails to Idle" in this table.
	Poor performance of TP sensor, ECT sensor or MAF sensor	"Throttle Position Sensor (TP Sensor)", "Engine Coolant Temperature Sensor (ECT Sensor)" or "Mass Air Flow (MAF) and Intake Air Temperature (IAT) Sensor (Engine Equipped with VVT System)" in Section 6E.
	Faulty fuel injector(s)	"Table B-1 Fuel Injector Circuit Check" in this section.
	Faulty ECM	
	Low Compression	"Low Compression" in this table.
	Poor valve seating	"Valves and Cylinder Head" in Section 6A3.
	Dragging brakes	"Diagnosis Table" in Section 5.
	Slipping clutch	"Diagnosis Table" in Section 7C.
	Thermostat out of order	"Thermostat" in Section 6B.
	Improper tire pressure	"Replacement Tires" in Section 3F.
	Camshaft position control (VVT) system out of order	"Timing Chain Cover" in Section 6A3.
Excessive engine oil consumption – Oil leakage	Blown cylinder head gasket	"Valves and Cylinder Head" in Section 6A3.
	Leaky camshaft oil seals	"Camshaft, Tappet and Shim" in Section 6A3.

Condition	Possible Cause	Reference Item
Excessive engine oil consumption – Oil entering combustion chamber	Sticky piston ring	"Pistons, Piston rings, Connecting Rods and Cylinders" in Section 6A3.
	Worn piston and cylinder	"Pistons, Piston rings, Connecting Rods and Cylinders" in Section 6A3.
	Worn piston ring groove and ring	"Pistons, Piston rings, Connecting Rods and Cylinders" in Section 6A3.
	Improper location of piston ring gap	"Pistons, Piston rings, Connecting Rods and Cylinders" in Section 6A3.
	Worn or damaged valve stem seal	"Valves and Cylinder Head" in Section 6A3.
	Worn valve stem	"Valves and Cylinder Head" in Section 6A3.
Engine hesitates (Momentary lack of response as accelerator is depressed. Can occur at all vehicle speeds. Usually most severe when first trying to make vehicle move, as from a stop sign.)	Spark plug faulty or plug gap out of adjustment	"Spark Plugs" in Section 6F.
	Leaky high-tension cord	"High-tension Cords" in Section 6F.
	Fuel pressure out of specification	"Table B-3 Fuel Pressure Check" in this section.
	Malfunctioning EGR valve	"EGR Valve" in Section 6E.
	Poor performance of TP sensor, ECT sensor or MAF sensor	"Throttle Position Sensor (TP Sensor)", "Engine Coolant Temperature Sensor (ECT Sensor)" or "Mass Air Flow (MAF) and Intake Air Temperature (IAT) Sensor (Engine Equipped with VVT System)" in Section 6E.
	Faulty fuel injector	"Table B-1 Fuel Injector Circuit Check" in this section.
	Faulty ECM	
	Engine overheating	"Overheating" in this table.
	Low compression	"Low Compression" in this table.
	Camshaft position control (VVT) system out of order	"Timing Chain Cover" in Section 6A3.
Surge (Engine power variation under steady throttle or cruise. Feels like vehicle speeds up and down with no change in accelerator pedal.)	Leaky or loosely connected high-tension cord	"High-tension Cords" in Section 6F.
	Faulty spark plug (excess carbon deposits, improper gap, burned electrodes, etc.)	"Spark Plugs" in Section 6F.
	Variable fuel pressure	"Table B-3 Fuel Pressure Check" in this section.
	Kinky or damaged fuel hose and lines	
	Faulty fuel pump (clogged fuel filter)	
	Malfunctioning EGR valve	"EGR Valve" in Section 6E.
	Poor performance of MAF sensor	"Mass Air Flow (MAF) and Intake Air Temperature (IAT) Sensor (Engine Equipped with VVT System)" in Section 6E.
	Faulty fuel injector	"Table B-1 Fuel Injector Circuit" in this section.
	Faulty ECM	

Condition	Possible Cause	Reference Item
Excessive detonation (Engine makes continuously sharp metallic knocks that change with throttle opening. Sounds like pop corn popping.)	Faulty spark plug	"Spark Plugs" in Section 6F.
	Loose connection of high-tension cord	"High-tension Cords" in Section 6F.
	Engine overheating	"Overheating" in this table.
	Clogged fuel filter (faulty fuel pump) or fuel lines	"Table B-1 Fuel Injector Circuit Check" or "Table B-2 Fuel Pump and Its Circuit Check" in this section.
	Air inhaling from intake manifold or throttle body gasket	
	Malfunctioning EGR valve	"EGR Valve" in Section 6E.
	Poor performance of knock sensor, ECT sensor or MAF sensor	"DTC P0327 / P0328 Knock Sensor Circuit Low/High" in this section, "Engine Control Temperature Sensor (ECT Sensor)" or "Mass Air Flow (MAF) and Intake Air Temperature (IAT) Sensor (Engine Equipped with VVT System)" in Section 6E.
	Faulty fuel injector(s)	"Table B-1 Fuel Injector Circuit Check" in this section.
	Faulty ECM	
	Excessive combustion chamber deposits	"Pistons, Piston rings, Connecting Rods and Cylinders" in Section 6A3.
	Camshaft position control (VVT) system out of order	"Timing Chain Cover" in Section 6A3.

Condition	Possible Cause	Reference Item
Engine has no power	Faulty spark plug	"Spark Plugs" in Section 6F.
	Faulty ignition coil with ignitor	"Ignition Coil Assembly (Including Ignitor)" in Section 6F.
	Leaks, loose connection or disconnection of high-tension cord	"High-tension Cords" in Section 6F.
	Faulty knock sensor	"DTC P0327 / P0328 Knock Sensor Circuit Low/High" in this section.
	Clogged fuel hose or pipe	"Table B-3 Fuel Pressure Check" in this section.
	Malfunctioning fuel pump	"Table B-2 Fuel Pump and Its Circuit Check" in this section.
	Air inhaling from intake manifold gasket or throttle body gasket	
	Engine overheating	"Overheating" in this table.
	Malfunctioning EGR valve	"EGR Valve" in Section 6E.
	Maladjusted accelerator cable play	"Accelerator cable Adjustment" in Section 6E.
	Poor performance of TP sensor, ECT sensor or MAF sensor	"Throttle Position Sensor (TP Sensor)", "Engine Coolant Temperature Sensor (ECT Sensor)" or "Mass Air Flow (MAF) and Intake Air Temperature (IAT) Sensor (Engine Equipped with VVT System)" in Section 6E.
	Faulty fuel injector(s)	"Table B-1 Fuel Injector Circuit Check" in this section.
	Faulty ECM	
	Dragging brakes	"Diagnosis Table" in Section 5.
	Slipping clutch	"Diagnosis Table" in Section 7C.
	Low compression	"Compression Check" in Section 6A3.
	Camshaft position control (VVT) system out of order	"Timing Chain Cover" in Section 6A3.

Condition	Possible Cause	Reference Item
Improper engine idling or engine fails to idle	Faulty spark plug	“Spark Plugs” in Section 6F.
	Leaky or disconnected high-tension cord	“High-tension Cords” in Section 6F.
	Faulty ignition coil with ignitor	“Ignition Coil Assembly (Including Ignitor)” in Section 6F.
	Fuel pressure out of specification	“Table B-3 Fuel Pressure Check” in this section.
	Leaky manifold, throttle body, or cylinder head gasket	
	Malfunctioning EGR valve	“EGR Valve” in Section 6E.
	Faulty idle air control system	“Table B-4 Idle Air Control System Check” in this section.
	Faulty evaporative emission control system	“Evaporative Emission (EVAP) Control System” in Section 6E.
	Faulty EGR system	“EGR Valve” in Section 6E.
	Faulty fuel injector(s)	“Table B-1 Fuel Injector Circuit Check” in this section.
	Poor performance of ECT sensor, TP sensor or MAF sensor	“Throttle Position Sensor (TP Sensor)”, “Engine Coolant Temperature Sensor (ECT Sensor)” or “Mass Air Flow (MAF) and Intake Air Temperature (IAT) Sensor (Engine Equipped with VVT System)” in Section 6E.
	Faulty ECM	
	Loose connection or disconnection of vacuum hoses	
	Malfunctioning PCV valve	“PCV System” in Section 6E.
	Engine overheating	“Overheating” in this section.
	Low compression	“Compression Check” in Section 6A3.
	Camshaft position control (VVT) system out of order	“Timing Chain Cover” in Section 6A3.

Condition	Possible Cause	Reference Item
Excessive hydrocarbon (HC) emission or carbon monoxide (CO)	Faulty spark plug	"Spark Plugs" in Section 6F.
	Leaky or disconnected high-tension cord	"High-tension Cords" in Section 6F.
	Faulty ignition coil with ignitor	"Ignition Coil Assembly (Including Ignitor)" in Section 6F.
	Low compression	"Compression Check" in Section 6A3.
	Lead contamination of three way catalytic converter	Check for absence of filler neck restrictor.
	Faulty evaporative emission control system	"Evaporative Emission (EVAP) Control System" in Section 6E.
	Fuel pressure out of specification	"Table B-3 Fuel Pressure Check" in this section.
	Closed loop system (A/F feed back compensation) fails • Faulty TP sensor • Poor performance of ECT sensor or MAF sensor	 "Throttle Position Sensor (TP Sensor)" in Section 6E. "Engine Coolant Temperature Sensor (ECT Sensor)" or "Mass Air Flow (MAF) and Intake Air Temperature (IAT) Sensor (Engine Equipped with VVT System)" in Section 6E.
	Faulty injector(s)	"Table B-1 Fuel Injector Circuit Check" in this section.
	Faulty ECM	
	Engine not at normal operating temperature	
	Clogged air cleaner	
	Vacuum leaks	
	Camshaft position control (VVT) system out of order	"Timing Chain Cover" in Section 6A3.
Excessive nitrogen oxides (NOx) emission	Improper ignition timing	"Ignition Timing" in Section 6F.
	Lead contamination of catalytic converter	Check for absence of filler neck restrictor.
	Faulty EGR system	"EGR Valve" in Section 6E.
	Fuel pressure out of specification	"Table B-3 Fuel Pressure Check" in this section.
	Closed loop system (A/F feed back compensation) fails • Faulty TP sensor • Poor performance of ECT sensor or MAF sensor	 "Throttle Position Sensor (TP Sensor)" in Section 6E. "Engine Coolant Temperature Sensor (ECT Sensor)" or "Mass Air Flow (MAF) and Intake Air Temperature (IAT) Sensor (Engine Equipped with VVT System)" in Section 6E.
	Faulty injector(s)	"Table B-1 Fuel Injector Circuit Check" in this section.
	Faulty ECM	
	Camshaft position control (VVT) system out of order	"Timing Chain Cover" in Section 6A3.

Scan Tool Data

As the data values given below are standard values estimated on the basis of values obtained from the normally operating vehicles by using a scan tool, use them as reference values. Even when the vehicle is in good condition, there may be cases where the checked value does not fall within each specified data range. Therefore, judgment as abnormal should not be made by checking with these data alone.
Also, conditions in the below table that can be checked by the scan tool are those detected by ECM and output from ECM as commands and there may be cases where the engine or actuator is not operating (in the condition) as indicated by the scan tool. Be sure to use the timing light to check the ignition timing.

NOTE:

- **With the generic scan tool, only star (∗) marked data in the table below can be read.**
- **When checking the data with the engine running at idle or racing, be sure to shift M/T gear to the neutral gear position and A/T gear to the "Park" position and pull the parking brake fully. Also, if nothing or "no load" is indicated, turn OFF A/C, all electric loads, P/S and all the other necessary switches.**

	SCAN TOOL DATA	CONDITION		REFERENCE VALUES
∗	FUEL SYSTEM B1 (FUEL SYSTEM STATUS)	At specified idle speed after warming up		CLOSED (closed loop)
∗	CALC LOAD (CALCULATED LOAD VALUE)	At specified idle speed with no load after warming up		3 – 9%
		At 2500 r/min with no load after warming up		12 – 17%
∗	COOLANT TEMP (ENGINE COOLANT TEMP.)	At specified idle speed after warming up		80 – 100 °C, 176 – 212 °F
∗	SHORT FT B1 (SHORT TERM FUEL TRIM)	At specified idle speed after warming up		– 20 – +20%
∗	LONG FT B1 (LONG TERM FUEL TRIM)	At specified idle speed after warming up		– 15 – +15%
∗	MAP (INTAKE MANIFOLD ABSOLUTE PRESSURE)	At specified idle speed with no load after		30 – 37 kPa, 8.9 – 10.9 in.Hg
∗	ENGINE SPEED	Idling with no load after warming up		Desired idle speed ±50 r/min
∗	VEHICLE SPEED	At stop		0 km/h, 0 mph
∗	IGNITION ADVANCE (IGNITION TIMING ADVANCE FOR NO.1 CYLINDER)	At specified idle speed with no load after warming up		5 – 16° BTDC
∗	INTAKE AIR TEMP	At specified idle speed after warming up		Ambient temp.: +15 °C (59 °F) –5 °C (23 °F)
∗	MAF (MASS AIR FLOW RATE)	At specified idle speed with no load after warming up		1 – 4 g/s, 0.1 – 0.5 lb/min
∗	THROTTLE POSITION	Ignition switch ON / engine stopped	Throttle valve fully closed	7 – 18%
			Throttle valve fully open	70 – 90%
∗	O2S B1 S1 (HEATED OXYGEN SENSOR-1)	At specified idle speed after warming up		0.01 – 0.95 V
∗	O2S B1 S2 (HEATED OXYGEN SENSOR-2)	When engine is running at 2000 r/min. for 3 min or longer after warming up.		0.01 – 0.95 V
	PSP SWITCH	No load to power steering.		OFF

	SCAN TOOL DATA	CONDITION		REFERENCE VALUES	
	DESIRED IDLE (DESIRED IDLE SPEED)	Idling with no load after warming up, M/T at neutral, A/T at "P" range		M/T	675 rpm
				A/T	700 rpm
	TP SENSOR VOLT (THROTTLE POSITION SENSOR OUTPUT VOLTAGE)	Ignition switch ON / engine stopped	Throttle valve fully closed	More than 0.2 V	
			Throttle valve fully open	Less than 4.8 V	
	INJ PULSE WIDTH (FUEL INJECTION PULSE WIDTH)	At specified idle speed with no load after warming up		2.0 – 3.6 msec.	
		At 2500 r/min with no load after warming up		2.0 – 3.6 msec.	
	IAC FLOW DUTY (IDLE AIR CONTROL FLOW DUTY)	Idling with no load after warming up		5 – 25%	
	TOTAL FUEL TRIM B1	At specified idle speed after warming up		– 35 – +35%	
	BATTERY VOLTAGE	Ignition switch ON / engine at stop		12 – 15 V	
	CANIST PRG DUTY (EVAP CANISTER PURGE FLOW DUTY)	–		0 – 100%	
	CLOSED THROTTLE POS (CLOSED THROTTLE POSITION)	Throttle valve at idle position		ON	
		Throttle valve opens larger than idle position		OFF	
	FUEL CUT	When engine is at fuel cut condition		ON	
		Other than fuel cut condition		OFF	
	A/C COND FAN	Engine running	A/C not operating	OFF	
			A/C operating	ON	
	ELECTRIC LOAD	Ignition switch ON / Headlight, small light and rear window defogger all turned OFF		OFF	
		Ignition switch ON / Headlight, small light or rear window defogger turned ON		ON	
	A/C SWITCH	Engine running after warming up, A/C not operating		OFF	
		Engine running after warming up, A/C operating		ON	
	STEP EGR FLOW DUTY	At specified idle speed after warming up		0%	
	FUEL TANK LEVEL	–		0 – 100%	
	BAROMETRIC PRES	–		Barometric pressure is displayed	
	FUEL PUMP	Within 3 seconds after ignition switch ON or engine running		ON	
		Engine at stop with ignition switch ON.		OFF	
	BRAKE SWITCH	Ignition switch ON	Brake pedal is depressing	ON	
			Brake pedal is releasing	OFF	
	BLOWER FAN	Ignition switch ON	Blower fan switch 3rd speed position or more	ON	
			Blower fan switch under 2nd speed position	OFF	
	A/C COMP RELAY	Engine running	A/C operating	ON	
			A/C not operating	OFF	
	VVT GAP (TARGET-ACTUAL POSITION)	At specified idle speed after warming up		0 – 3°	

Scan tool data definitions

FUEL SYSTEM B1 (FUEL SYSTEM STATUS)
Air / fuel ratio feedback loop status displayed as either open or closed loop. Open indicates that ECM ignores feedback from the exhaust oxygen sensor.
Closed indicates final injection duration is corrected for oxygen sensor feedback.

CALC LOAD (CALCULATED LOAD VALUE, %)
Engine load displayed as a percentage of maximum possible load. Value is calculated mathematically using the formula: actual (current) intake air volume ÷ maximum possible intake air volume x 100%.

COOLANT TEMP (ENGINE COOLANT TEMPERATURE, °C, °F)
It is detected by engine coolant temp. sensor.

SHORT FT B1 (SHORT TERM FUEL TRIM, %)
Short term fuel trim value represents short term corrections to the air / fuel mixture computation. A value of 0 indicates no correction, a value greater than 0 means an enrichment correction, and a value less than 0 implies an enleanment correction.

LONG FT B1 (LONG TERM FUEL TRIM, %)
Long term fuel trim Value represents long term corrections to the air / fuel mixture computation. A value of 0 indicates no correction, a value greater than 0 means an enrichment correction, and a value less than 0 implies an enleanment correction.

MAP (INTAKE MANIFOLD ABSOLUTE PRESSURE, kPa, in.Hg)
It is detected by manifold absolute pressure sensor and used (among other things) to compute engine load.

ENGINE SPEED (rpm)
It is computed by reference pulses from crankshaft position sensor.

VEHICLE SPEED (km/h, mph)
It is computed based on pulse signals from vehicle speed sensor.

IGNITION ADVANCE (IGNITION TIMING ADVANCE FOR NO.1 CYLINDER, °)
Ignition timing of NO.1 cylinder is commanded by ECM. The actual ignition timing should be checked by using the timing light.

INTAKE AIR TEMP (°C, °F)
It is detected by intake air temp. sensor and used to determine the amount of air passing into the intake manifold as air density varies with temperature.

MAF (MASS AIR FLOW RATE, g/s, lb/min)
It represents total mass of air entering intake manifold which is measured mass air flow sensor.

THROTTLE POSITION (ABSOLUTE THROTTLE POSITION, %)
When throttle position sensor is at fully closed position, throttle opening is indicated as 0% and 100% full open position.

O2S B1 S1 (HEATED OXYGEN SENSOR-1, V)
It indicates output voltage of HO2S-1 installed on exhaust manifold (pre-catalyst).

O2S B1 S2 (HEATED OXYGEN SENSOR-2, V)
It indicates output voltage of HO2S-2 installed on exhaust pipe (post-catalyst). It is used to detect catalyst deterioration.

DESIRED IDLE (DESIRED IDLE SPEED, rpm)
The Desired Idle Speed is an ECM internal parameter which indicates the ECM requested idle. If the engine is not running, this number is not valid.

TP SENSOR VOLT (THROTTLE POSITION SENSOR OUTPUT VOLTAGE, V)
The Throttle Position Sensor reading provides throttle valve opening information in the form of voltage.

INJ PULSE WIDTH (FUEL INJECTION PULSE WIDTH, msec.)
This parameter indicates time of the injector drive (valve opening) pulse which is output from ECM (but injector drive time of NO.1 cylinder for multiport fuel injection).

IAC FLOW DUTY (IDLE AIR (SPEED) CONTROL DUTY, %)
This parameter indicates current flow time rate within a certain set cycle of IAC valve (valve opening rate) which controls the amount of bypass air (idle speed).

TOTAL FUEL TRIM (%)
The value of Total Fuel Trim is obtained by putting values of short Term Fuel Trim and Long Term Fuel Trim together. This value indicates how much correction is necessary to keep the air / fuel mixture stoichiometrical.

BATTERY VOLTAGE (V)
This parameter indicates battery positive voltage inputted from main relay to ECM.

CANIST PURGE DUTY (EVAP CANISTER PURGE FLOW DUTY, %)
This parameter indicates valve ON (valve open) time rate within a certain set cycle of EVAP purge solenoid valve which controls the amount of EVAP purge.
0% means that the purge valve is completely closed while 100% is a fully open valve.

CLOSED THROTTLE POS (ON / OFF)
This parameter will read ON when throttle valve is fully closed, or OFF when the throttle is not fully closed.

FUEL CUT (ON / OFF)
ON: Fuel being cut (output signal to injector is stopped)
OFF: Fuel not being cut

A/C COND FAN (A/C CONDENSER FAN RELAY, ON / OFF)
ON: Command for condenser fan relay operation being output.
OFF: Command for relay operation not being output.

ELECTRIC LOAD (ON / OFF)
ON: Headlight, small light or rear window defogger ON signal inputted.
OFF: Above electric loads all turned OFF.

A/C SWITCH (ON / OFF)
ON: Command for A/C operation being output from ECM to A/C amplifier.
OFF: Command for A/C operation not being output.

FUEL TANK LEVEL (%)
This parameter indicates approximate fuel level in the fuel tank. As the detectable range of the fuel level sensor is set as 0 to 100%, however, with some models whose fuel tank capacity is smaller, the indicated fuel level may be only 70% even when the fuel tank is full.

STEP EGR FLOW DUTY (%)
This parameter indicates opening rate of EGR valve which controls the amount of EGR flow.

PSP SWITCH (ON/OFF)
The Power Steering Pressure switch parameter displays ON when steering wheel is turned all the way to the right or left.

BAROMETRIC PRES (kPa, in.Hg)
This parameter represents a measurement of barometric air pressure and is used for altitude correction of the fuel injection quantity and IAC valve control.

FUEL PUMP (ON/OFF)
ON is displayed when the ECM activates the fuel pump via the fuel pump relay switch.

BRAKE SWITCH (ON/OFF)
This parameter indicates the state of the brake switch.

BLOWER FAN (ON/OFF)
This parameter indicates the state of the blower fan motor switch.

A/C COMP RELAY (A/C COMPRESSOR RELAY, ON/OFF)
This parameter indicates the state of the A/C switch.

VVT GAP (TARGET-ACTUAL POSITION, °)
It is calculated using the formula: target valve timing advance – actual valve timing advance.

Inspection of ECM and Its Circuits

ECM and its circuits can be checked at ECM connectors by measuring voltage, pulse signal and resistance.

CAUTION:
ECM cannot be checked by itself. It is strictly prohibited to connect voltmeter or ohmmeter to ECM with connector disconnected from it.

Voltage Check

1) Remove ECM (1) from vehicle body referring to "Engine Control Module (ECM)" in Section 6E.

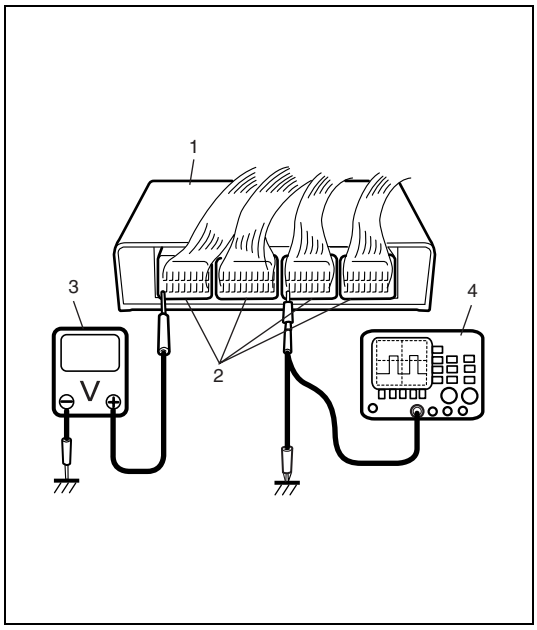

2) Check voltage and/or pulse signal at each terminal of connectors (2) connected, using voltmeter (3) and oscilloscope (4).

NOTE:

- **As each terminal voltage is affected by the battery voltage, confirm that it is 11 V or more when ignition switch is ON.**
- **Voltage with asterisk(*) cannot be measured by voltmeter because it is pulse signal.**
  Check it with oscilloscope if necessary.

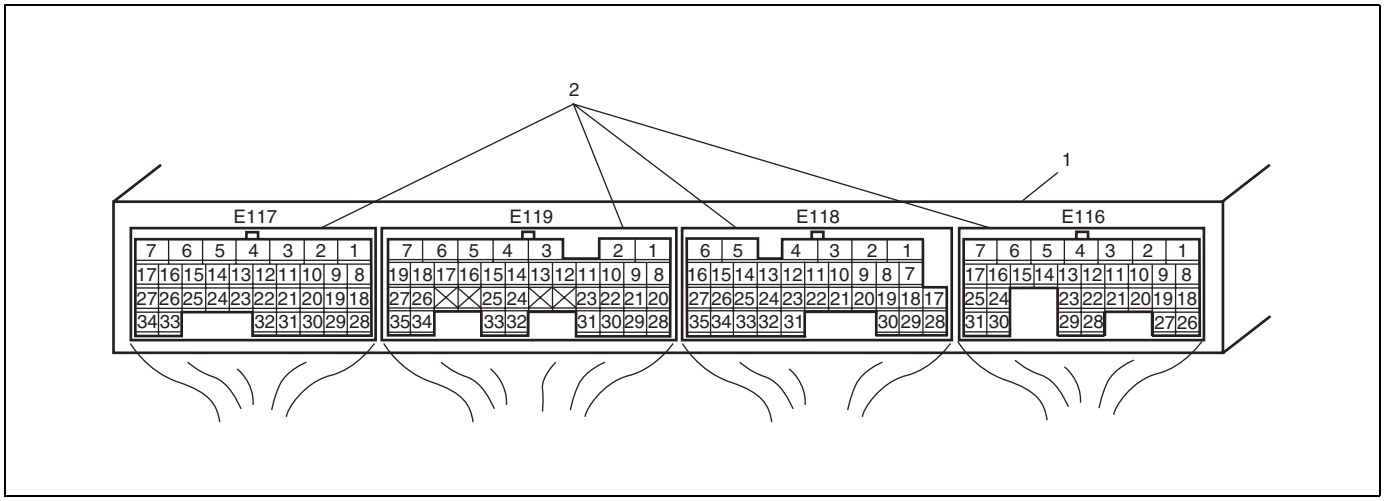

1. ECM
2. ECM connectors (Viewed from harness side)

ECM Terminal Voltage Values Table

Terminal No.		Wire color	Circuit	Normal voltage	Condition	Remarks
E116	1	–	–	–	–	–
	2	–	–	–	–	–
	3	–	–	–	–	–
	4	–	–	–	–	–
	5	–	–	–	–	–
	6	–	–	–	–	–
	7	–	–	–	–	–
	8	–	–	–	–	–
	9	–	–	–	–	–
	10	–	–	–	–	–
	11	–	–	–	–	–
	12	–	–	–	–	–
	13	–	–	–	–	–
	14	RED/WHT	Rear defogger switch signal	10 – 14 V	Ignition switch turned ON, rear defogger switch ON.	–
				0 – 1 V	Ignition switch ON, rear defogger switch OFF.	
	15	–	–	–	–	–
	16	GRN	ABS signal (if equipped)	10 – 14 V	Ignition switch turned ON.	–
	17	–	–	–	–	–
	18	–	–	–	–	–
	19	–	–	–	–	–
	20	–	–	–	–	–
	21	–	–	–	–	–
	22	–	–	–	–	–
	23	–	–	–	–	–
	24	–	–	–	–	–
	25	–	–	–	–	–
	26	–	–	–	–	–
	27	–	–	–	–	–
	28	–	–	–	–	–
	29	–	–	–	–	–
	30	–	–	–	–	–
	31	PNK	Test switch terminal	10 – 14 V	Ignition switch turned ON.	–

Terminal No.		Wire color	Circuit	Normal voltage	Condition	Remarks
E118	1	PPL/YEL	Malfunction indicator lamp	10 – 14 V	Engine running.	–
				0 – 1 V	Ignition switch turned ON with engine stop.	
	2	RED/GRN	Immobilizer indicator lamp	10 – 14 V	Engine running.	–
				0 – 1 V	Ignition switch turned ON with engine stop.	
	3	–	–	–	–	–
	4	–	–	–	–	–
	5	BLU/BLK	Main power supply	10 – 14 V	Ignition switch turned ON.	–
	6	BLU/BLK	Main power supply	10 – 14 V	Ignition switch turned ON.	–
	7	WHT	CAN (low) communication line (active low signal) to TCM	*0.5 – 2.5 V (Reference waveform No.1)	Ignition switch turned ON with engine stop.	CAN communication line signal is pulse. Pulse signal is displayed with a regular frequency which varies depending on engine condition.
	8	RED	CAN (high) communication line (active high signal) to TCM	*2.5 – 4.7 V (Reference waveform No.1)		
	9	GRN/WHT	Stop lamp switch signal	0 – 1 V	Ignition switch turned ON, stop lamp not lighted up.	–
	10	YEL/BLK	Serial communication line of data link connector 5 V	4 – 5.5 V	Ignition switch turned ON.	–
	11	PNK/GRN	Serial communication line of data link connector 12 V	8 – 14 V	Ignition switch turned ON.	–
	12	BRN	Engine revolution signal for tachometer	0 – 0.8 V	Ignition switch turned ON with engine stop.	–
				*0 – 1 V ↑↓ 8 – 14 V (Reference waveform No.2 and No.3)	While engine running.	Output signal is pulse. Pulse frequency varies depending on engine speed. (2 pulses are generated at 1 crankshaft revolution.) (3000 r/min. = 100 Hz)

Terminal No.		Wire color	Circuit	Normal voltage	Condition	Remarks
E118	13	BLU/ORN	Heater blower switch signal	10 – 14 V	Ignition switch turned ON, heater blower switch selected at OFF.	–
				0 – 1 V	Ignition switch turned ON, heater blower switch selected at 3rd speed position or more.	
	14	YEL/RED	Fuel level sensor signal	0 – 6 V	Ignition switch turned ON. Voltage depends on fuel level.	–
	15	WHT/RED	A/C evaporator outlet air temp. sensor signal (if equipped)	3.4 – 3.7 V	Ignition switch turned ON at A/C evaporator outlet temperature 0 °C (32 °F).	–
				2.5 – 2.8 V	Ignition switch turned ON at A/C evaporator outlet temperature 15 °C (59 °F).	
				1.7 – 2.0 V	Ignition switch turned ON at A/C evaporator outlet temperature 30 °C (86 °F)	
	16	WHT	Power source for ECM internal memory	10 – 14 V	Ignition switch turned ON.	–
	17	–	–	–	–	–
	18	–	–	–	–	–
	19	–	–	–	–	–
	20	–	–	–	–	–
	21	–	–	–	–	–
	22	–	–	–	–	–
	23	–	–	–	–	–
	24	–	–	–	–	–
	25	–	–	–	–	–
	26	–	–	–	–	–
	27	–	–	–	–	–
	28	BLK/WHT	Ignition switch signal	0 – 1 V	Ignition switch turned OFF.	–
				10 – 14 V	Ignition switch turned ON.	–
	29	–	–	–	–	–

Terminal No.		Wire color	Circuit	Normal voltage	Condition	Remarks
E118	30	GRN/WHT	A/C switch signal (if equipped)	10 – 14 V	Ignition switch turned ON, A/C switch and heater blower switch selected at OFF.	–
				0 – 1 V	Ignition switch turned ON, A/C switch ON and heater blower switch selected 1st position or more.	
	31	–	–	–	–	–
	32	BLK/WHT	ECT sensor signal for combination meter	*0 – 0.6 V ↑↓ 10 – 14 V (Reference waveform No.4)	Ignition switch turned ON.	Output signal is 1 Hz active low duty pulse. Duty ratio varies depending on ECT. ECT –40 °C (–40 °F) = 10% ON duty ECT 120 °C (248 °F) = 90% ON duty
	33	RED/YEL	Lighting switch signal	10 – 14 V	Lighting switch ON.	–
				0 – 1 V	Lighting switch OFF.	–
	34	–	–	–	–	–
	35	BLK/BLU	Ground for A/C evaporator outlet air temp. sensor (if equipped)	Below 0.3 V	Ignition switch turned ON.	–

Terminal No.		Wire color	Circuit	Normal voltage	Condition	Remarks
E119	1	BLK	Ground for ECM	Below 0.3 V	Ignition switch turned ON.	–
	2	BLK/RED	Oil control valve ground	Below 1.0 V	Ignition switch turned ON.	–
	3	YEL/RED	Oil control valve output	*0 – 0.6 V ↑↓ 10 – 14 V (Reference waveform No.5 and No.6)	At the moment of the ignition switch turned ON.	Output signal is active high pulse. Duty ratio varies depending on vehicle condition.
	4	WHT/BLK	Fuel injector No.4 output	10 – 14 V	Ignition switch turned ON.	–
				*0 – 0.6 V ↑↓ 10 – 14 V (Reference waveform No.7 and No.8)	Engine running at idling with after warming up engine.	Output signal is active low pulse. Pulse frequency varies depending on engine speed.

Terminal No.		Wire color	Circuit	Normal voltage	Condition	Remarks
E119	5	WHT/GRN	Fuel injector No.3 output	10 – 14 V	Ignition switch turned ON.	–
				*0 – 0.6 V ↑↓ 10 – 14 V (Reference waveform No.7 and No.9)	Engine running at idling with after warming up engine.	Output signal is active low pulse. Pulse frequency varies depending on engine speed.
	6	RED/GRN	Fuel injector No.2 output	10 – 14 V	Ignition switch turned ON.	–
				*0 – 0.6 V ↑↓ 10 – 14 V (Reference waveform No.7 and No.10)	Engine running at idling with after warming up engine.	Output signal is active low pulse. Pulse frequency varies depending on engine speed.
	7	RED/WHT	Fuel injector No.1 output	10 – 14 V	Ignition switch turned ON.	–
				*0 – 0.6 V ↑↓ 10 – 14 V (Reference waveform No.7, No.11 and No.30)	Engine running at idling with after warming up engine.	Output signal is active low pulse. Pulse frequency varies depending on engine speed.
	8	LT GRN/RED	Output of 5 V power source for TP sensor and MAP sensor	4.5 – 5.5 V	Ignition switch turned ON.	–
	9	RED	Knock sensor signal	2 – 3 V (Reference waveform No.12 and No.13)	Ignition switch turned ON.	–
					Engine running at 4000 r/min. with after warming up engine.	
	10	WHT	CMP sensor signal	0 – 1 V or 4 – 5 V	Ignition switch turned ON	–
				*0 – 0.6 V ↑↓ 4 – 5 V (Reference waveform No.14 and No.15)	Engine running at idling with after warming up engine.	Sensor signal is pulse. Pulse frequency varies depending on engine speed. (6 pulses are generated at 1 camshaft revolution.)

Terminal No.		Wire color	Circuit	Normal voltage	Condition	Remarks
E119	11	RED	Oxygen signal of heated oxygen sensor-1	0 – 1 V	Ignition switch turned ON.	–
				*Deflects between over 0.5 V and under 0.45 V (Reference waveform No.16 and No.17)	While engine running at 2,000 r/min. for 1 min. or longer after warmed up engine.	
	12	–	–	–	–	–
	13	–	–	–	–	–
	14	YEL/GRN	Mass air flow (MAF) sensor signal	0.5 – 1.5 V	Ignition switch turned ON with engine stops.	–
				1.5 – 2.0 V (Reference waveform No.18)	When engine running at specified idle speed after warming up engine.	
	15	GRN	Manifold absolute pressure (MAP) sensor signal	Approx. 1.8 V (Reference waveform No.19)	Ignition switch turned ON with barometric pressure at 100 kPa, 760 mmHg.	–
				Approx. 4.2 V (Reference waveform No.20)	When engine racing, after warming up engine with barometric pressure at 100 kPa, 760 mmHg.	
	16	GRN/BLK	Engine coolant temp. (ECT) sensor signal	3.3 – 3.8 V	Ignition switch turned ON, ECT at 0 °C, 32 °F.	–
				1.38 – 1.72 V	Ignition switch turned ON, ECT at 50 °C, 122 °F.	
				0.40 – 0.53 V	Ignition switch turned ON, ECT at 100 °C, 212 °F.	
	17	LT GRN/ BLK	Intake air temp. (IAT) sensor signal	3.18 – 3.67 V	Ignition switch turned ON, IAT at 0 °C, 32 °F.	–
				1.32 – 1.65 V	Ignition switch turned ON, IAT at 40 °C, 104 °F.	
				0.46 – 0.60 V	Ignition switch turned ON, IAT at 80 °C, 176 °F.	
	18	–	–	–	–	–

Terminal No.		Wire color	Circuit	Normal voltage	Condition	Remarks
E119	19	YEL/GRN	Vehicle speed sensor signal	*0 – 1 V ↑↓ 10 – 14 V (Reference waveform No.21)	Vehicle running.	Sensor signal is pulse. Pulse frequency varies depending on vehicle speed. (21 pulses are generated par sec. at 30 km/h, 19 mph.) (2548 pulses/km)
	20	–	–	–	–	–
	21	–	–	–	–	–
	22	–	–	–	–	–
	23	–	–	–	–	–
	24	–	–	–	–	–
	25	–	–	–	–	–
	26	–	–	–	–	–
	27	–	–	–	–	–
	28	BLK/BLU	Ground for sensors	Below 0.3 V	Ignition switch turned ON.	–
	29	–	–	–	–	–
	30	GRN/RED	CKP sensor signal	0 – 1 V or 4 – 5 V	Ignition switch turned ON.	–
				*4 – 5 V ↑↓ 0 – 0.6 V (Reference waveform No.14 and No.15)	Engine running at idling with after warming up engine.	Sensor signal is pulse. Pulse frequency varies depending on engine speed. (30 (36-6) pulses are generated at 1 crankshaft revolution.)
	31	–	–	–	–	–
	32	YEL/BLK	Ground for MAF sensor	Below 0.3 V	Ignition switch turned ON.	–
	33	WHT	Oxygen signal of heated oxygen sensor-2	4 – 5 V	Ignition switch turned ON.	–
				*Deflects between over 0.5 V and under 0.45 V (Reference waveform No.22)	While engine running at 2,000 r/min. or more after vehicle running over 30 km/h, 19 mph for 5 min.	

Terminal No.		Wire color	Circuit	Normal voltage	Condition	Remarks
E119	34	LT GRN	Throttle position (TP) sensor signal	0.5 – 1.0 V (Reference waveform No.19)	Ignition switch turned ON and throttle valve at idle position with warmed engine.	–
				3.4 – 4.7 V (Reference waveform No.20)	Ignition switch turned ON and throttle valve at full open position.	
	35	BLK/RED (A/T)	Starting motor signal	0 – 1 V	Ignition switch turned ON.	–
		BLK/YEL (M/T)		6 – 14 V	While engine cranking.	

Terminal No.		Wire color	Circuit	Normal voltage	Condition	Remarks
E117	1	BLK	Ground for ECM	Below 0.3 V	Ignition switch turned ON.	–
	2	BLK	Ground for ECM	Below 0.3 V	Ignition switch turned ON.	–
	3	RED/BLU	Heater output of heated oxygen sensor-2	10 – 14 V	Ignition switch turned ON.	–
				0 – 1 V (Reference waveform No.22)	Engine running at idling after vehicle running over 30 km/h, 19 mph for 5 min.	
	4	PNK/BLK	Heater output of heated oxygen sensor-1	10 – 14 V	Ignition switch turned ON.	–
				*0 – 2 V ↑↓ 10 – 14 V (Reference waveform No.16 and No.17)	Engine running at idling with after warming up engine.	Output signal is active low duty pulse. Duty ratio varies depending on engine condition.
	5	–	–	–	–	–
	6	–	–	–	–	–
	7	–	–	–	–	–
	8	GRN/YEL	IAC valve output	*0 – 2 V ↑↓ 8 – 14 V (Reference waveform No.23)	Ignition switch turned ON.	Output signal is active low duty pulse. Duty ratio varies depending on vehicle condition.
				*0 – 2 V ↑↓ 8 – 14 V (Reference waveform No.24)	Engine running at idling with after warming up engine.	
	9	–	–	–	–	–
	10	–	–	–	–	–

Terminal No.		Wire color	Circuit	Normal voltage	Condition	Remarks
E117	11	PNK/BLU (Left-hand steering vehicle)	A/C compressor relay output (if equipped)	10 – 14 V	Engine running, A/C switch OFF and heater fan switch OFF position.	–
		PNK (Right-hand steering vehicle)		0 – 1 V	Engine running, A/C switch ON and heater fan switch 1st position or more.	
	12	PNK/BLK	A/C condenser fan relay output (if equipped)	10 – 14 V	Engine running, A/C switch OFF and heater fan switch OFF position.	–
				0 – 1 V	Engine running, A/C switch ON and heater fan switch 1st position or more.	
	13	BLU/RED	EVAP canister purge valve output	10 – 14 V	Ignition switch turned ON.	–
				*0 – 0.6 V ↑↓ 8 – 14 V (Reference waveform No.25)	Vehicle running at 20 km/h, 12 mph with after warming up engine.	Output signal is active low duty pulse. Duty ratio varies depending on vehicle condition.
	14	WHT/GRN	Fuel pump relay output	0 – 2.5 V	For 2 sec. from the time is ignition switch turned to ON or while engine is running.	–
				10 – 14 V	On and after 2 sec. from the time is ignition switch turned to ON or while engine is stop.	
	15	BLU	Main power supply relay output	10 – 14 V	Ignition switch turned OFF.	–
				0 – 2 V	Ignition switch turned ON.	
	16	GRY/BLU	EGR valve (stepper motor coil 3) output	10 – 14 V	Ignition switch turned ON.	–
				*0 – 1 V ↑↓ 10 – 14 V (Reference waveform No.26)	Engine running at idling with after warming up engine.	Output signal is active low duty pulse. Pulse generated times depending on vehicle condition.

Terminal No.		Wire color	Circuit	Normal voltage	Condition	Remarks
E117	17	GRY	EGR valve (stepper motor coil 1) output	10 – 14 V	Ignition switch turned ON.	–
				*0 – 1 V ↑↓ 10 – 14 V (Reference waveform No.26)	Engine running at idling with after warming up engine.	Output signal is active low duty pulse. Pulse generated times depending on vehicle condition.
	18	–	–	–	–	–
	19	–	–	–	–	–
	20	–	–	–	–	–
	21	–	–	–	–	–
	22	–	–	–	–	–
	23	–	–	–	–	–
	24	–	–	–	–	–
	25	–	–	–	–	–
	26	–	–	–	–	–
	27	–	–	–	–	–
	28	BLU/ORN	Power steering pressure switch signal	10 – 14 V	Ignition switch turned ON.	–
				0 – 1 V	With engine at idle speed, turning steering wheel to the right or left as far as it stops.	
	29	–	–	–	–	–
	30	–	–	–	–	–
	31	BRN/BLK	Ignition coil No.2 and No.3 output	0 – 0.6 V	Ignition switch turned ON.	–
				*0 – 0.6 V ↑↓ 3 – 5 V (Reference waveform No.27 and No.28)	Engine running at idling with after warming up engine.	Output signal is active high pulse. Pulse frequency varies depending on engine speed.
	32	BRN/WHT	Ignition coil No.1 and No.4 output	0 – 0.6 V	Ignition switch turned ON.	–
				*0 – 0.6 V ↑↓ 3 – 5 V (Reference waveform No.27, No.29 and No.30)	Engine running at idling with after warming up engine.	Output signal is active high pulse. Pulse frequency varies depending on engine speed.

Terminal No.		Wire color	Circuit	Normal voltage	Condition	Remarks
E117	33	GRY/BLK	EGR valve (stepper motor coil 4) output	10 – 14 V	Ignition switch turned ON.	–
				*0 – 1 V ↑ ↓ 10 – 14 V (Reference waveform No.26)	Engine running at idling with after warming up engine.	Output signal is active low duty pulse. Pulse generated times depending on vehicle condition.
	34	GRY/RED	EGR valve (stepper motor coil 2) output	10 – 14 V	Ignition switch turned ON.	–
				*0 – 1 V ↑ ↓ 10 – 14 V (Reference waveform No.26)	Engine running at idling with after warming up engine.	Output signal is active low duty pulse. Pulse generated times depending on vehicle condition.

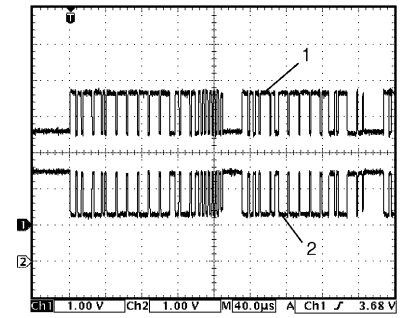

1. Reference waveform No.1

CAN communication line signal from TCM at ignition switch turned ON

Measurement terminal	CH1: E118-8 to E119-1 CH2: E118-7 to E119-1
Oscilloscope setting	CH1: 1 V/DIV, CH2: 1 V/DIV TIME: 40 µs/DIV
Measurement condition	Ignition switch turned ON (Depending on engine condition)

1. CAN communication line signal (High)
2. CAN communication line signal (Low)

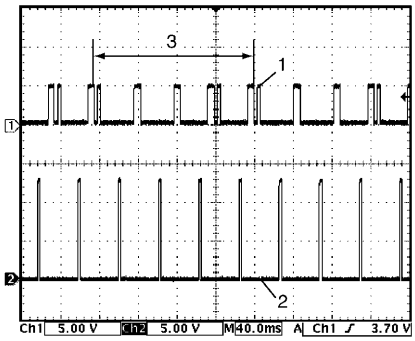

2. Reference waveform No.2

Ignition pulse (engine revolution) (2) signal at engine idling

Measurement terminal	CH1: E119-10 to E119-1 CH2: E118-12 to E119-1
Oscilloscope setting	CH1: 5 V/DIV, CH2: 5 V/DIV TIME: 40 ms/DIV
Measurement condition	• After warmed up to normal operating temperature • Engine at specified idle speed

1. CMP sensor signal
3. 720° crank angle

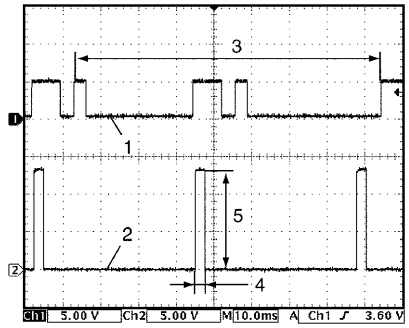

3. Reference waveform No.3

Ignition pulse (engine revolution) (2) signal at engine idling

Measurement terminal	CH1: E119-10 to E119-1 CH2: E118-12 to E119-1
Oscilloscope setting	CH1: 5 V/DIV, CH2: 5 V/DIV TIME: 10 ms/DIV
Measurement condition	• After warmed up to normal operating temperature • Engine at specified idle speed

1. CMP sensor signal
3. 360° crank angle
4. 2 to 4 msec.
5. 10 – 14 V

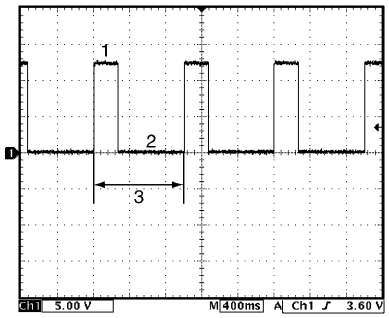

4. Reference waveform No.4

Engine coolant temperature signal for combination meter at engine idling

Measurement terminal	CH1: E118-32 to E119-1
Oscilloscope setting	CH1: 5 V/DIV TIME: 400 ms/DIV
Measurement condition	• After warmed up to normal operating temperature • Engine at specified idle speed

1. OFF signal
2. ON signal
3. One duty cycle (Approx. 1 sec.)

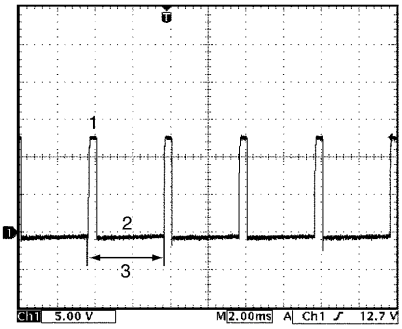

5. Reference waveform No.5

Oil control valve signal at engine idling

Measurement terminal	CH1: E119-3 to E119-2
Oscilloscope setting	CH1: 5 V/DIV TIME: 2 ms/DIV
Measurement condition	At the moment of the ignition switch turned ON

1. ON signal
2. OFF signal
3. One duty cycle

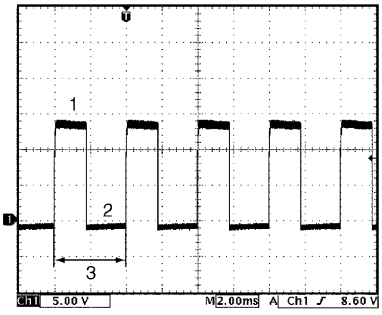

6. Reference waveform No.6

Oil control valve signal (1) at engine racing

Measurement terminal	CH1: E119-3 to E119-2
Oscilloscope setting	CH1: 5 V/DIV TIME: 2 ms/DIV
Measurement condition	• After warmed up to normal operating temperature • Drive vehicle at 20 km/h (12 mph)

1. ON signal
2. OFF signal
3. One duty cycle

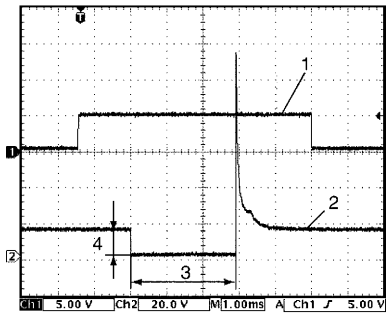

7. Reference waveform No.7

Fuel injector signal (2) at engine idling

Measurement terminal	CH1: E119-10 to E119-1 CH2: E119-4 to E119-1
Oscilloscope setting	CH1: 5 V/DIV, CH2: 20 V/DIV TIME: 1 ms/DIV
Measurement condition	• After warmed up to normal operating temperature • Engine at specified idle speed

1. CMP sensor signal
3. Pulse width of fuel injector: ON 2 – 4 msec
4. 10 – 14 V

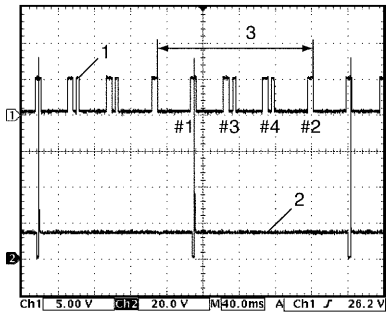

8. Reference waveform No.8

No.4 fuel injector signal (2) at engine idling

Measurement terminal	CH1: E119-10 to E119-1 CH2: E119-4 to E119-1
Oscilloscope setting	CH1: 5 V/DIV, CH2: 20 V/DIV TIME: 40 ms/DIV
Measurement condition	• After warmed up to normal operating temperature • Engine at specified idle speed

1. CMP sensor signal
3. 720° crank angle

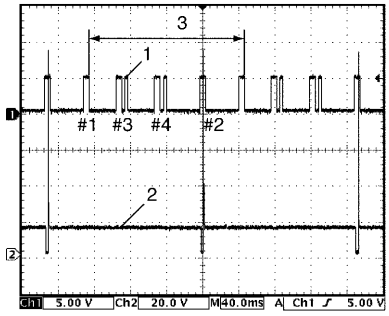

9. Reference waveform No.9

No.3 fuel injector signal (2) at engine idling

Measurement terminal	CH1: E119-10 to E119-1 CH2: E119-5 to E119-1
Oscilloscope setting	CH1: 5 V/DIV, CH2: 20 V/DIV TIME: 40 ms/DIV
Measurement condition	• After warmed up to normal operating temperature • Engine at specified idle speed

1. CMP sensor signal
3. 720° crank angle

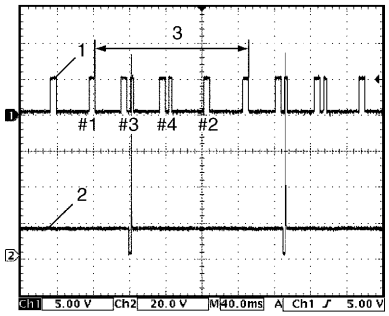

10. Reference waveform No.10

No.2 fuel injector signal (2) at engine idling

Measurement terminal	CH1: E119-10 to E119-1 CH2: E119-6 to E119-1
Oscilloscope setting	CH1: 5 V/DIV, CH2: 20 V/DIV TIME: 40 ms/DIV
Measurement condition	• After warmed up to normal operating temperature • Engine at specified idle speed

1. CMP sensor signal
3. 720° crank angle

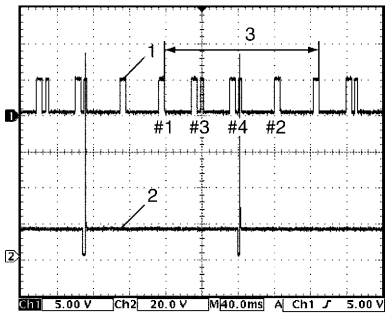

11. Reference waveform No.11

No.1 fuel injector signal (2) at engine idling

Measurement terminal	CH1: E119-10 to E119-1 CH2: E119-7 to E119-1
Oscilloscope setting	CH1: 5 V/DIV, CH2: 20 V/DIV TIME: 40 ms/DIV
Measurement condition	• After warmed up to normal operating temperature • Engine at specified idle speed

1. CMP sensor signal
3. 720° crank angle

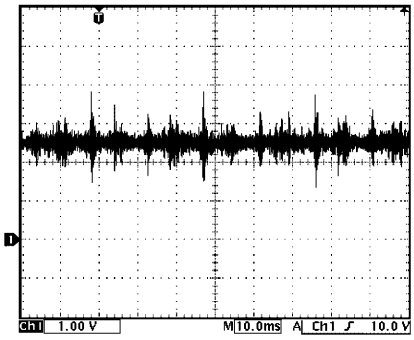

12. Reference waveform No.12

Knock sensor signal at engine speed 4000 r/min.

Measurement terminal	CH1: E119-9 to E119-1
Oscilloscope setting	CH1: 1 V/DIV TIME: 10 ms/DIV
Measurement condition	• After warmed up to normal operating temperature • Run engine at 4000 r/min.

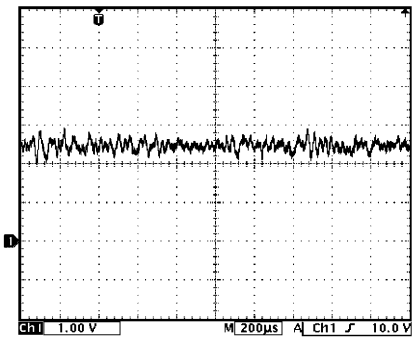

13. Reference waveform No.13

Knock sensor signal at engine speed 4000 r/min.

Measurement terminal	CH1: E119-9 to E119-1
Oscilloscope setting	CH1: 1 V/DIV TIME: 200 µs/DIV
Measurement condition	• After warmed up to normal operating temperature • Run engine at 4000 r/min.

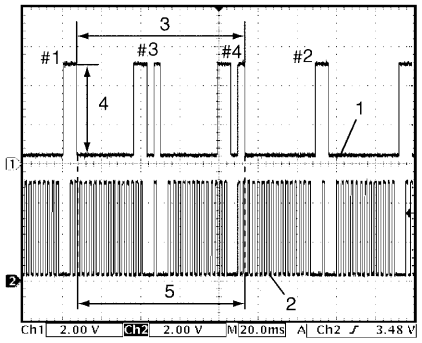

14. Reference waveform No.14

CMP sensor signal at engine idling

Measurement terminal	CH1: E119-10 to E119-1 CH2: E119-30 to E119-1
Oscilloscope setting	CH1: 2 V/DIV, CH2: 2 V/DIV TIME: 20 ms/DIV
Measurement condition	• After warmed up to normal operating temperature • Engine at specified idle speed

1. CMP sensor signal
2. CKP sensor signal
3. 360° crank angle
4. 4 – 5 V
5. 36 – 6 = 30 CKP pulse

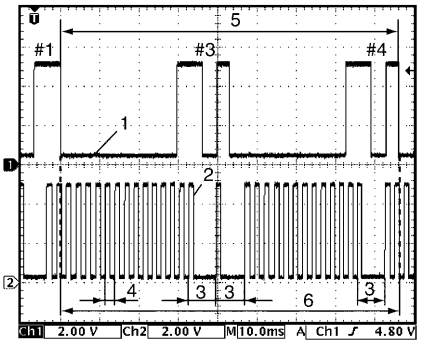

15. Reference waveform No.15

CMP sensor signal at engine idling

Measurement terminal	CH1: E119-10 to E119-1 CH2: E119-30 to E119-1
Oscilloscope setting	CH1: 2 V/DIV, CH2: 2 V/DIV TIME: 10 ms/DIV
Measurement condition	• After warmed up to normal operating temperature • Engine at specified idle speed

1. CMP sensor signal
2. CKP sensor signal
3. 30° crank angle
4. 10° crank angle
5. 360° crank angle
6. 36 – 6 = 30 CKP pulse

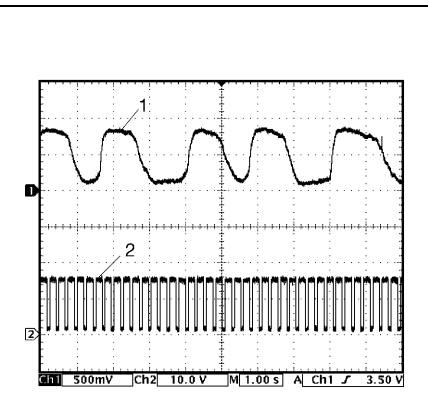

16. Reference waveform No.16

Heated oxygen sensor-1 signal (1) at engine idling

Measurement terminal	CH1: E119-11 to E119-28 CH2: E117-4 to E119-1
Oscilloscope setting	CH1: 500 m/DIV, CH2: 10 V/DIV TIME: 1 s/DIV
Measurement condition	• After warmed up to normal operating temperature • Engine at specified idle speed

2. Heated oxygen sensor-1 heater signal

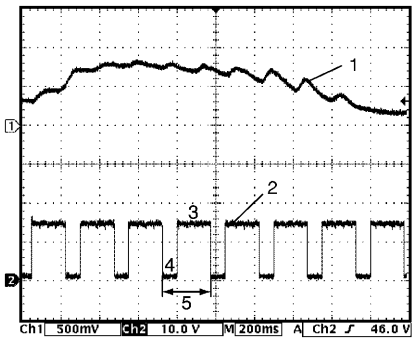

17. Reference waveform No.17

Heated oxygen sensor-1 heater signal (2) at engine idling

Measurement terminal	CH1: E119-11 to E119-28 CH2: E117-4 to E119-1
Oscilloscope setting	CH1: 500 m/DIV, CH2: 10 V/DIV TIME: 200 ms/DIV
Measurement condition	• After warmed up to normal operating temperature • Engine at specified idle speed

1. Heated oxygen sensor-1 signal
3. OFF signal
4. ON signal
5. One duty cycle

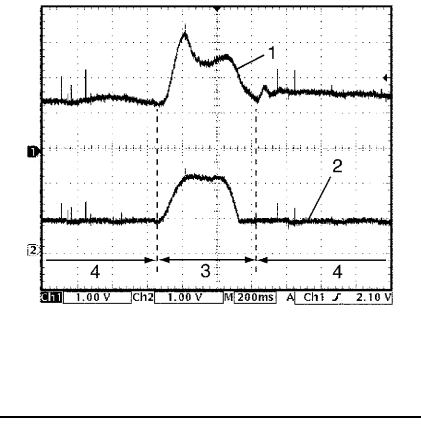

18. Reference waveform No.18

Mass air flow sensor signal (1) at engine racing

Measurement terminal	CH1: E119-14 to E119-32 CH2: E119-34 to E119-28
Oscilloscope setting	CH1: 1 V/DIV, CH2: 1 V/DIV TIME: 200 ms/DIV
Measurement condition	• After warmed up to normal operating temperature • Engine at racing

2. Throttle position sensor signal
3. Racing
4. Idle

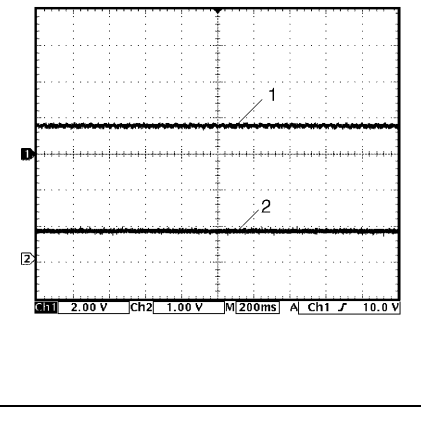

19. Reference waveform No.19

Manifold absolute pressure sensor signal (1) at ignition switch turned ON

Measurement terminal	CH1: E119-15 to E119-28 CH2: E119-34 to E119-28
Oscilloscope setting	CH1: 2 V/DIV, CH2: 1 V/DIV TIME: 200 ms/DIV
Measurement condition	• After warmed up to normal operating temperature • Ignition switch turned ON

2. Throttle position sensor signal

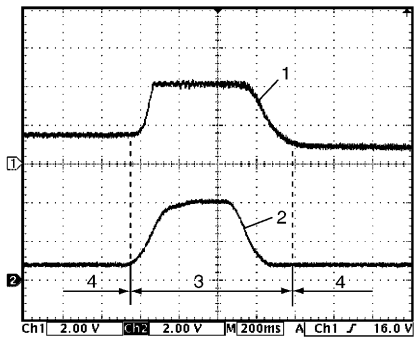

20. Reference waveform No.20

Manifold absolute pressure sensor signal (1) at engine racing

Measurement terminal	CH1: E119-15 to E119-28 CH2: E119-34 to E119-28
Oscilloscope setting	CH1: 2 V/DIV, CH2: 2 V/DIV TIME: 200 ms/DIV
Measurement condition	• After warmed up to normal operating temperature • Engine racing

2. Throttle position sensor signal
3. Racing
4. Idle

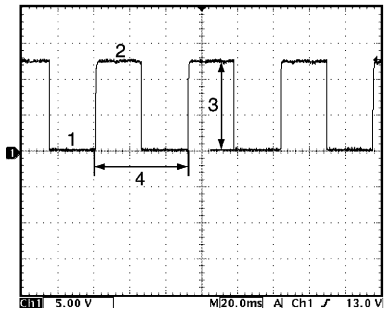

21. Reference waveform No.21

VSS signal at 30 km/h (19 mph)

Measurement terminal	CH1: E119-19 to E119-1
Oscilloscope setting	CH1: 5 V/DIV TIME: 20 ms/DIV
Measurement condition	• After warmed up to normal operating temperature • Drive vehicle at 30 km/h (19 mph)

1. ON
2. OFF
3. 10 – 14 V
4. One duty cycle (Approx. 45 – 55 msec.)

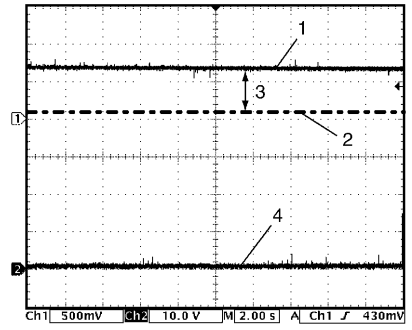

22. Reference waveform No.22

Heated oxygen sensor-2 heater signal (4) at engine idling

Measurement terminal	CH1: E119-33 to E118-35 CH2: E117-3 to E119-1
Oscilloscope setting	CH1: 500 m/DIV, CH2: 10 V/DIV TIME: 2 s/DIV
Measurement condition	• After warmed up to normal operating temperature • Drive vehicle at 60 km/h (37 mph) for 10 min. • Engine at specified idle speed

1. Heated oxygen sensor-2 signal upper limit
2. Heated oxygen sensor-2 signal lower limit
3. Normal waveform range

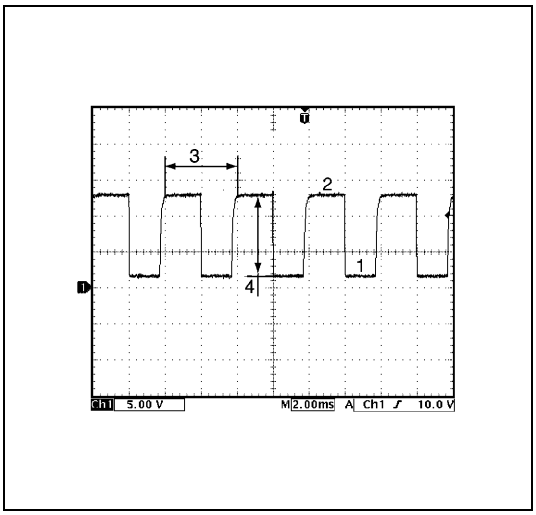

23. Reference waveform No.23

IAC signal at ignition switch turned ON

Measurement terminal	CH1: E117-8 to E119-1
Oscilloscope setting	CH1: 5 V/DIV TIME: 2 ms/DIV
Measurement condition	• After warmed up to normal operating temperature • Ignition switch turned ON • All accessory switch turned OFF

1. ON signal
2. OFF signal
3. One duty cycle (Approx. 4 msec.)
4. 8 – 14 V

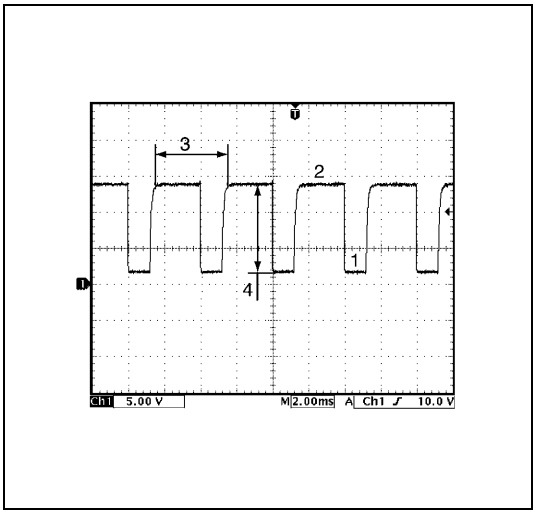

24. Reference waveform No.24

IAC signal at engine idling

Measurement terminal	CH1: E117-8 to E119-1
Oscilloscope setting	CH1: 5 V/DIV TIME: 2 ms/DIV
Measurement condition	• After warmed up to normal operating temperature • Engine at specified idle speed • All accessory switch turned OFF

1. ON signal
2. OFF signal
3. One duty cycle (Approx. 4 msec.)
4. 8 – 14 V

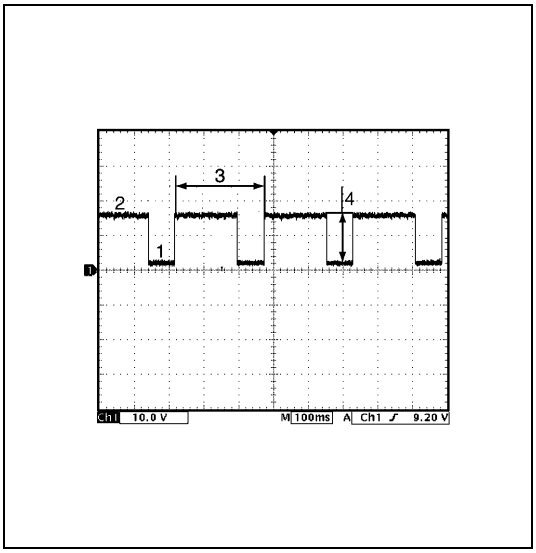

25. Reference waveform No.25

EVAP canister purge valve signal

Measurement terminal	CH1: E117-3 to E119-1
Oscilloscope setting	CH1: 10 V/DIV TIME: 100 ms/DIV
Measurement condition	• After warmed up to normal operating temperature • Drive vehicle at 20 km/h (12 mph)

1. ON signal
2. OFF signal
3. One duty cycle
4. 10 – 14 V

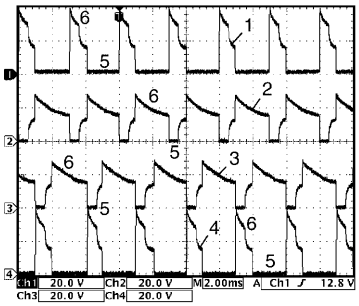

26. Reference waveform No.26

EGR valve signal

Measurement terminal	CH1: E117-17 to E119-1 CH2: E117-34 to E119-1 CH3: E117-16 to E119-1 CH4: E117-33 to E119-1
Oscilloscope setting	CH1: 20 V/DIV, CH2: 20 V/DIV, CH3: 20 V/DIV, CH4: 20 V/DIV TIME: 2 ms/DIV
Measurement condition	• After warmed up to normal operating temperature • Engine at specified idle speed

1. EGR valve stepper motor coil 1 signal
2. EGR valve stepper motor coil 2 signal
3. EGR valve stepper motor coil 3 signal
4. EGR valve stepper motor coil 4 signal
5. ON signal
6. OFF signal

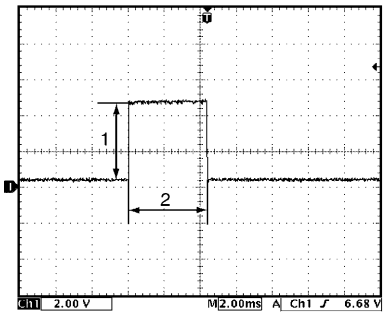

27. Reference waveform No.27

Ignition coil signal at engine idling

Measurement terminal	CH1: E117-32 to E119-1
Oscilloscope setting	CH1: 1 V/DIV TIME: 2 ms/DIV
Measurement condition	• After warmed up to normal operating temperature • Engine at specified idle speed

1. 4 – 6 V
2. 4 – 5 msec.

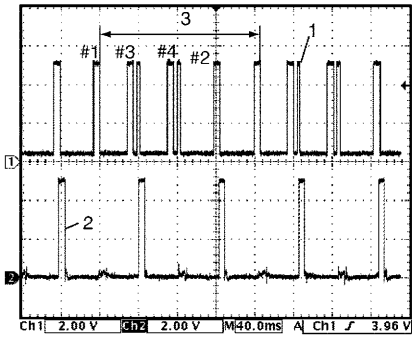

28. Reference waveform No.28

Ignition coil No.2 and No.3 (2) signal at engine idling

Measurement terminal	CH1: E119-10 to E119-1 CH2: E117-31 to E119-1
Oscilloscope setting	CH1: 2 V/DIV, CH2: 2 V/DIV TIME: 40 ms/DIV
Measurement condition	• After warmed up to normal operating temperature • Engine at specified idle speed

1. CMP sensor signal
3. 720° crank angle

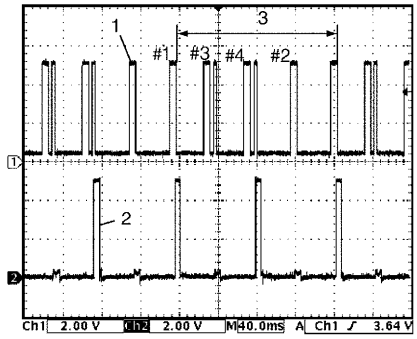

29. Reference waveform No.29

Ignition coil No.1 and No.4 (2) signal at engine idling

Measurement terminal	CH1: E119-10 to E119-1 CH2: E117-32 to E119-1
Oscilloscope setting	CH1: 2 V/DIV, CH2: 2 V/DIV TIME: 40 ms/DIV
Measurement condition	• After warmed up to normal operating temperature • Engine at specified idle speed

1. CMP sensor signal
3. 720° crank angle

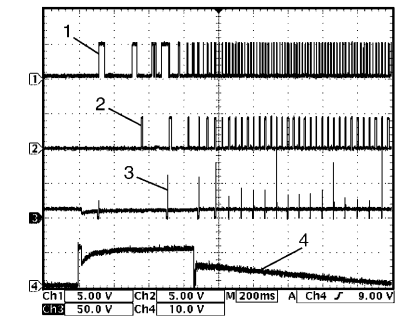

30. Reference waveform No.30

Ignition coil signal and fuel injector signal at engine cranking

Measurement terminal	CH1: E119-10 to E119-1 CH2: E117-32 to E119-1 CH3: E119-7 to E119-1 CH4: E119-35 to E119-1
Oscilloscope setting	CH1: 5 V/DIV, CH2: 5 V/DIV, CH3: 50 V/DIV, CH4: 10 V/DIV TIME: 200 ms/DIV
Measurement condition	• After warmed up to normal operating temperature • Engine at cranking

1. CMP sensor signal
2. Ignition coil No.1 and No.4 signal
3. No.1 fuel injector signal
4. Engine start signal

Resistance Check

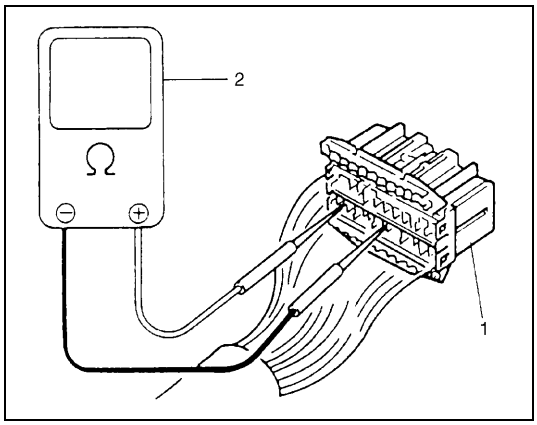

1) Disconnect ECM connectors (1) from ECM with ignition switch OFF.

CAUTION:
Never touch terminals of ECM itself or connect voltmeter or ohmmeter (2).

2) Check resistance between each terminal of connectors disconnected.

CAUTION:
- **Be sure to connect ohmmeter probe from wire harness side of coupler.**
- **Be sure to turn OFF ignition switch for this check.**
- **Resistance in table below represents that when parts temperature is 20 °C (68 °F).**

1. ECM connector disconnected
2. Ohmmeter

Terminals	Circuit	Standard Resistance	Condition
E117-4 to E118-28	HO2S-1 heater	5 – 6.4 Ω	–
E117-3 to E118-28	HO2S-2 heater	11.7 – 14.3 Ω	
E119-7 to E118-5/6	Fuel injector No.1	10.8 – 18.2 Ω	–
E119-6 to E118-5/6	Fuel injector No.2	10.8 – 18.2 Ω	–
E119-5 to E118-5/6	Fuel injector No.3	10.8 – 18.2 Ω	–
E119-4 to E118-5/6	Fuel injector No.4	10.8 – 18.2 Ω	–
E117-33 to E118-5/6	EGR valve (stepper motor coil 4)	20 – 29 Ω	–
E117-16 to E118-5/6	EGR valve (stepper motor coil 3)	20 – 29 Ω	–
E117-34 to E118-5/6	EGR valve (stepper motor coil 2)	20 – 29 Ω	–
E117-17 to E118-5/6	EGR valve (stepper motor coil 1)	20 – 29 Ω	–
E117-13 to E118-5/6	EVAP canister purge valve	28 – 35 Ω	–
E117-14 to E118-28	Fuel pump relay	160 – 240 Ω	–
E117-15 to E118-28	Main relay	160 – 240 Ω	Battery disconnected and ignition switch ON
E119-1 to vehicle body ground	Ground	Below 1.5 Ω	–
E117-1 to vehicle body ground	Ground	Below 1.5 Ω	–
E117-2 to vehicle body ground	Ground	Below 1.5 Ω	–

Component Location

NOTE:

The figure shows left-hand steering vehicle.

For right-hand steering vehicle, parts with (*) are installed at the other side.

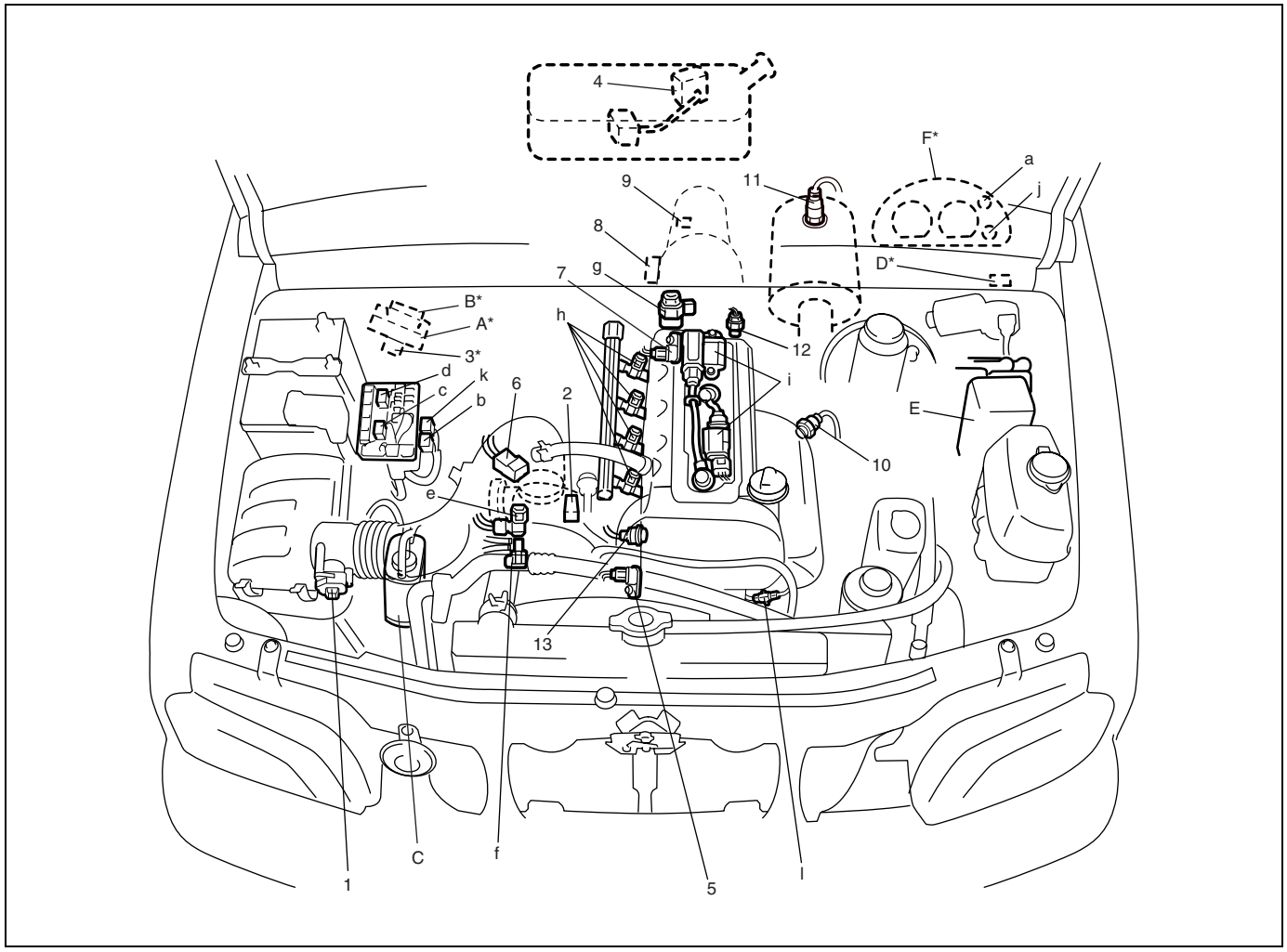

1. MAF and IAT sensor	a: Immobilizer indicator lamp	A: ECM
2. TP sensor	b: A/C condenser fan motor relay (if equipped)	B: A/T control module (if equipped)
3. Monitor connector	c: Main relay	C: EVAP canister
4. Fuel level sensor	d: Fuel pump relay	D: DLC
5. CKP sensor	e: IAC valve	E: ABS control module (if equipped)
6. MAP sensor	f: EVAP canister purge valve	F: Combination meter
7. CMP sensor	g: EGR valve	
8. Transmission range switch	h: Fuel injector	
9. VSS	i: Ignition coil assemblies	
10. HO2S-1	j: MIL	
11. HO2S-2	k: A/C compressor relay (if equipped)	
12. ECT sensor	l: Oil control valve	
13. Knock sensor		

Table A-1 Malfunction Indicator Lamp Circuit Check – Lamp Does Not Come "ON" with Ignition Switch ON (But Engine Stops)

Wiring Diagram

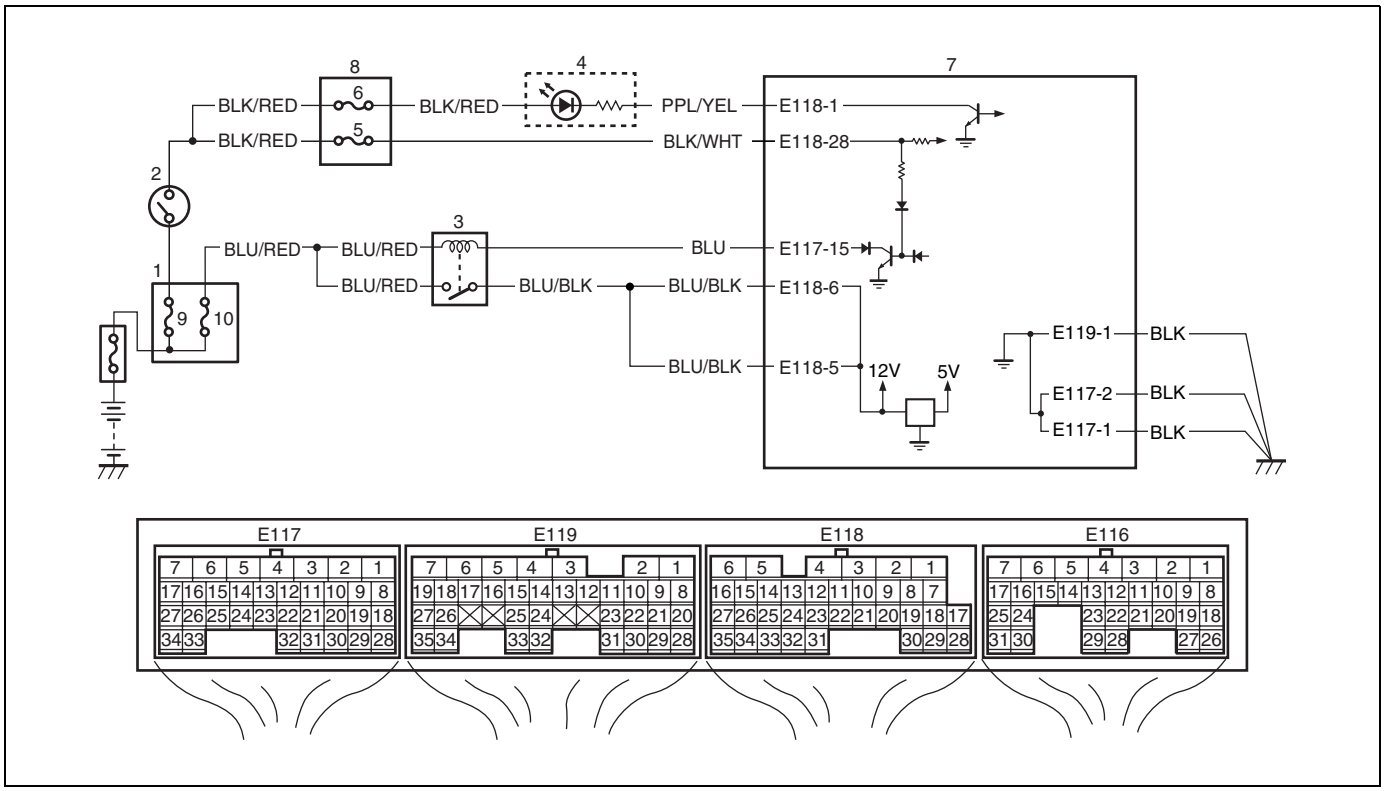

1. Relay box	4. Malfunction indicator lamp in combination meter	7. ECM	10. "FI" fuse
2. Ignition switch	5. "IG" fuse	8. Circuit fuse box	
3. Main relay	6. "MTR" fuse	9. "IGN1" fuse	

Circuit Description

When the ignition switch is turned ON, ECM causes the main relay to turn ON (close the contact point). Then, ECM being supplied with the main power, turns ON the malfunction indicator lamp (MIL). When the engine starts to run and no malfunction is detected in the system, MIL goes OFF but if a malfunction was or is detected, MIL remains ON even when the engine is running.

Troubleshooting

Step	Action	Yes	No
1	MIL Power Supply Check 1) Turn ignition switch to ON position. Do other warning lights come ON?	Go to Step 4.	Go to Step 2.
2	MTR Fuse Check 1) Turn ignition switch to OFF position. 2) Check for fuse blown at "MTR" fuse. Is "MTR" fuse in good condition?	Go to Step 3.	Replace "MTR" fuse and check for short.

Step	Action	Yes	No
3	MIL Power Supply Check 1) Disconnect ignition switch connector. 2) Remove "MTR" fuse. 3) Measure resistance between "BLK/RED" wire terminal of ignition switch connector and "BLK/RED" wire terminal of "MTR" fuse connector. Is resistance 1Ω or less?	Go to Step 4.	"BLK/RED" wire in open circuit or poor connection.
4	MIL Power Supply Check 1) Connect ignition switch connector. 2) Install "MTR" fuse. 3) Remove combination meter referring to "Combination Meter" in Section 8. 4) Check for proper connection to combination meter connector at "BLK/RED" wire and "PPL/YEL" wire terminals. 5) If OK, then turn ignition switch to ON position and measure voltage between combination meter connector at "BLK/RED" wire terminal and vehicle body ground. Is it 10 – 14 V?	Go to Step 5.	"BLK/RED" wire in open circuit.
5	MIL Circuit Check 1) Turn ignition switch OFF position. 2) Disconnect ECM connector "E118". 3) Check for proper connection to ECM connector at "E118-1" terminal. 4) Measure resistance between "PPL/YEL" wire terminal of combination meter connector and "E118-1" terminal of ECM connector. Is resistance 1 Ω or less?	Go to Step 6.	"PPL/YEL" wire in open circuit.
6	MIL Circuit Check 1) Connect combination meter connectors. 2) Turn ignition switch to ON position. 3) Using service wire, ground "E118-1" terminal wire of disconnected ECM connector. Does MIL turn ON?	Substitute a known-good ECM and recheck.	Replace combination meter.

Table A-2 Malfunction Indicator Lamp Circuit Check – Lamp Remains "ON" after Engine Starts

Wiring Diagram

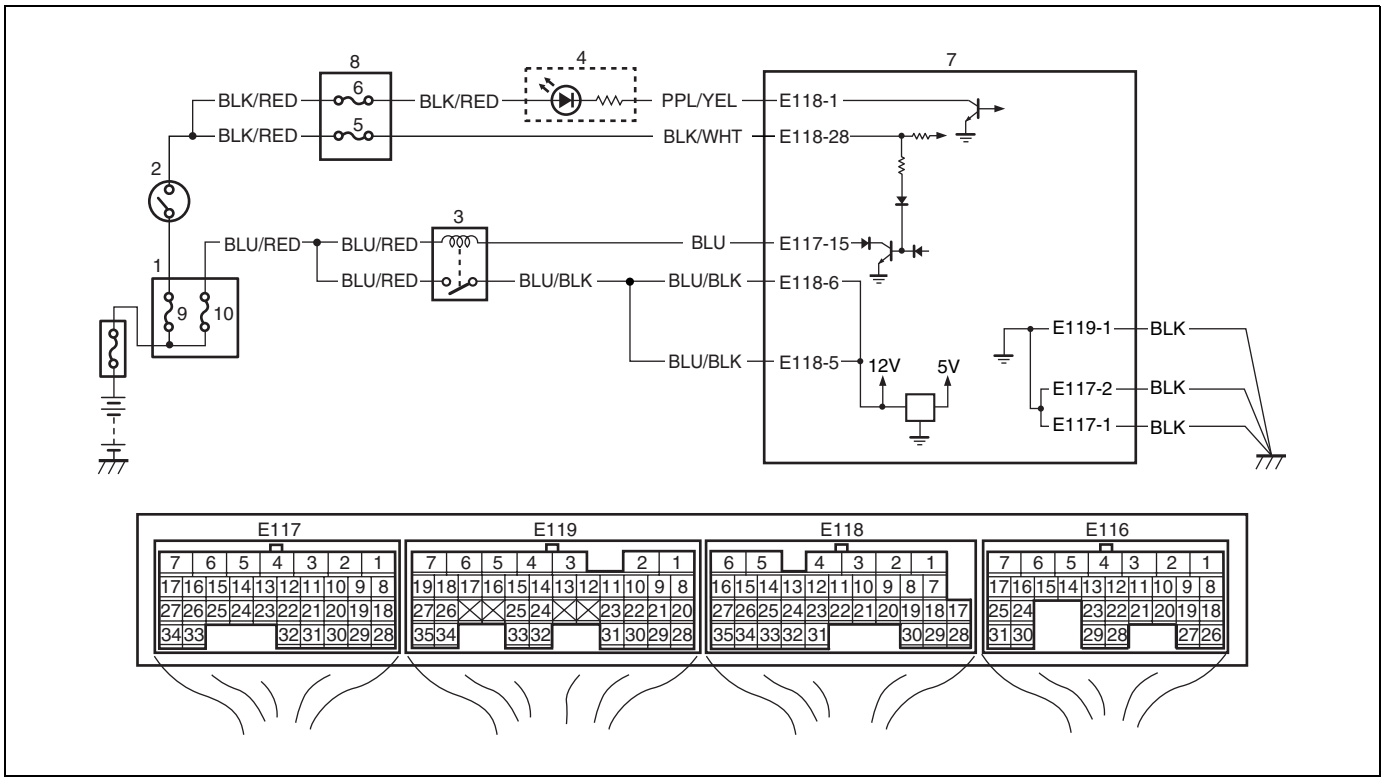

1. Relay box	4. Malfunction indicator lamp in combination meter	7. ECM	10. "FI" fuse
2. Ignition switch	5. "IG" fuse	8. Circuit fuse box	
3. Main relay	6. "MTR" fuse	9. "IGN1" fuse	

Circuit Description

When the ignition switch is turned ON, ECM causes the main relay to turn ON (close the contact point). Then, ECM being supplied with the main power, turns ON the malfunction indicator lamp (MIL). When the engine starts to run and no malfunction is detected in the system, MIL goes OFF but if a malfunction was or is detected, MIL remains ON even when the engine is running.

Troubleshooting

Step	Action	Yes	No
1	DTC Check 1) Start engine and recheck DTC while engine running. Is there any DTC(s)?	Go to Step 2 of "Engine and Emission Control System Check" in this section.	Go to Step 2.

Step	Action	Yes	No
2	MIL Circuit Check 1) Turn ignition switch to OFF position. 2) Remove combination meter referring to “Combination Meter” in Section 8. 3) Disconnect connectors from ECM. 4) Measure resistance between “PPL/YEL” wire terminal of combination meter connector and vehicle body ground. Is resistance infinity?	Go to Step 3.	“PPL/YEL” wire shorted to ground circuit.
3	MIL Circuit Check 1) Connect connectors to combination meter. Does MIL turn ON at ignition switch turned ON?	Replace combination meter.	Substitute a known-good ECM and recheck.

Table A-3 ECM Power and Ground Circuit Check – MIL Doesn't Light with Ignition Switch ON and Engine Doesn't Start Though It Is Cranked Up

Wiring Diagram

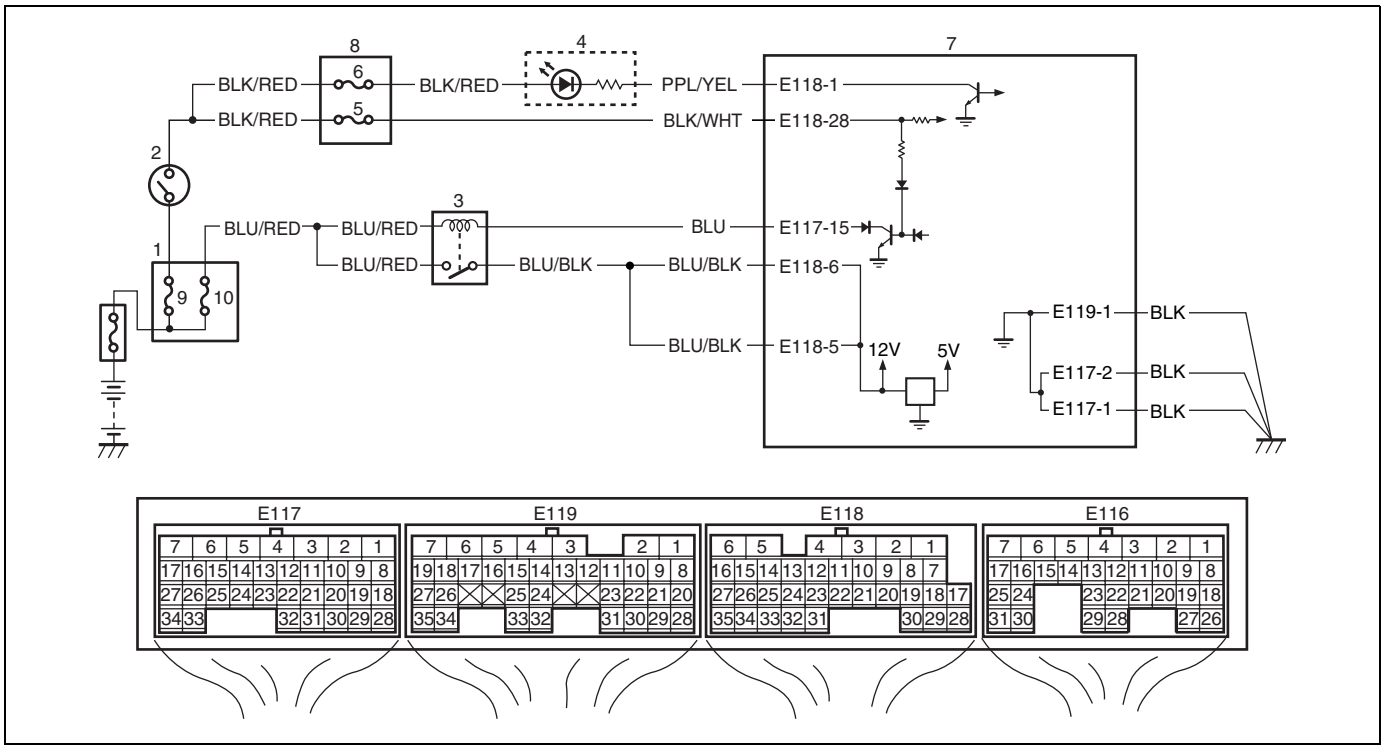

1. Relay box	4. Malfunction indicator lamp in combination meter	7. ECM	10. "FI" fuse
2. Ignition switch	5. "IG" fuse	8. Circuit fuse box	
3. Main relay	6. "MTR" fuse	9. "IGN1" fuse	

Circuit Description

When the ignition switch tuned ON, the main relay turns ON (the contact point closes) and the main power is supplied to ECM.

Troubleshooting

Step	Action	Yes	No
1	IG Fuse Check 1) Disconnect connectors from ECM with ignition switch turned OFF. 2) Check for proper connection to ECM connector at "E118-1", "E118-28", "E117-15", "E118-6", "E118-5", "E119-1", "E117-1" and "E117-2" terminals. 3) If OK, check "IG" fuse for fuse blown. Is "IG" fuse in good condition?	Go to Step 2.	Replace fuse and check for short in circuits connected to this fuse.
2	Ignition Signal Check 1) Turn ignition switch to ON position. 2) Measure voltage between "E118-28" terminal of ECM connector and vehicle body ground. Is voltage 10 – 14 V?	Go to Step 3.	"BLK/WHT" or "BLK/RED" wire in open circuit.

Step	Action	Yes	No
3	Main Relay Circuit Check 1) Turn ignition switch to OFF position. 2) Check for fuse blown at "FI" fuse (1). See Fig. 1. 3) If OK, measure voltage between "E117-15" terminal of ECM connector and vehicle body ground. Is voltage 10 – 14 V?	Go to Step 4.	Go to Step 8.
4	Main Relay Circuit Check 1) Remove ECM from vehicle body and connect connectors to ECM. 2) Turn ignition switch to ON position. 3) Measure voltage between "E117-15" terminal of ECM connector and vehicle body ground. Is voltage 0 – 1 V?	Go to Step 6.	Go to Step 5.
5	ECM Ground Circuit Check 1) Turn ignition switch to OFF position. 2) Disconnect connectors from ECM. 3) Measure resistance between each "E119-1", "E117-1" and "E117-2" terminals of ECM connector and vehicle body ground. Is resistance 1 Ω or less?	Substitute a known-good ECM and recheck.	"BLK" wire in open circuit or high resistance circuit.
6	Main Relay Circuit Check 1) Disconnect connectors from ECM with ignition switch turned OFF. 2) Using service wire, ground "E117-15" terminal of ECM connector and measure voltage between each "E118-5" and "E118-6" terminals of ECM connector and vehicle body ground. Is voltage 10 – 14 V?	Substitute a known-good ECM and recheck.	Go to Step 7.
7	Main Relay Circuit Check 1) Remove main relay (2) from relay box. See Fig. 2. 2) Check for proper connection to main relay connector at "BLU/RED" and "BLU/BLK" wire terminals. 3) If OK, measure resistance between each "E118-5" and "E118-6" terminals of ECM connector and "BLU/BLK" wire terminal of main relay connector. Is resistance 1Ω or less?	Go to Step 8.	"BLU/BLK" wire in open circuit or high resistance circuit.
8	Main Relay Circuit Check 1) Remove main relay from relay box. 2) Measure voltage between "BLU/RED" wire terminals of main relay connector and vehicle body ground. Is voltage 10 – 14 V?	Go to Step 9.	"BLU/RED" wire in open circuit.
9	Main Relay Check 1) Check main relay referring to "Main Relay, Fuel Pump Relay, A/C Compressor Relay and A/C Condenser Fan Relay" in Section 6E. Is main relay in good condition?	"BLU" wire in open circuit or high resistance circuit.	Replace main relay.

[A]: Fig. 1 for Step 3 / [B]: Fig. 2 for Step 7

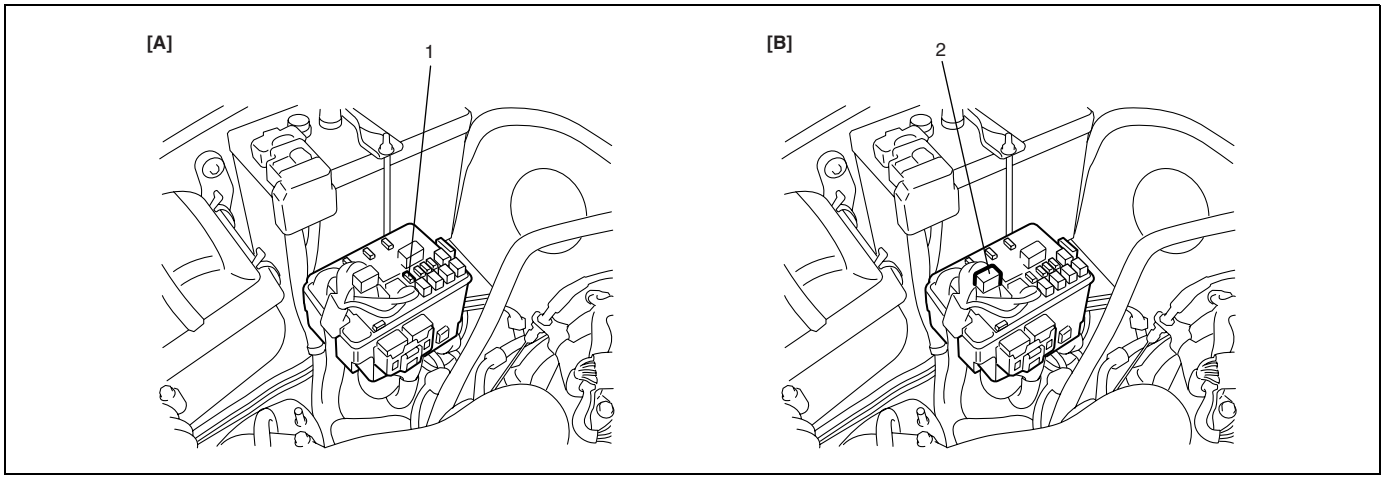

DTC P0010 Camshaft Position Actuator Circuit

System and Wiring Diagram

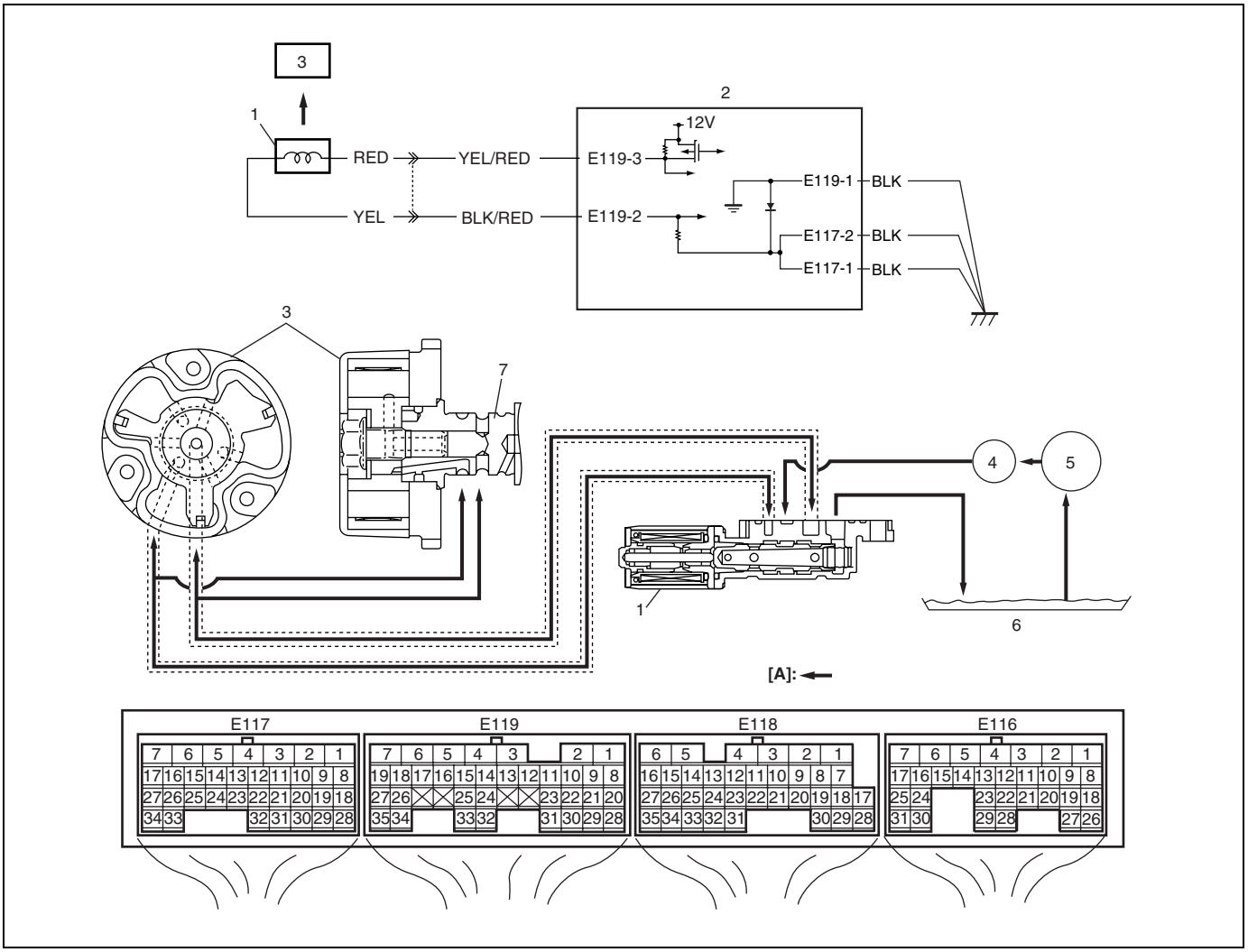

[A]: Oil flow	3. Camshaft timing sprocket	6. Oil pan
1. Oil control valve	4. Oil filter	7. Intake camshaft
2. ECM	5. Oil pump	

Circuit Description

Actual valve timing fails to become close to target advance level of each function although advance control function or retarded advance control function is at work.

DTC Detecting Condition and Trouble Area

DTC detecting condition	Trouble area
Monitor signal of oil control valve is different from command signal. (Circuit open or short) (1 driving cycle detection logic)	• Oil control valve • Oil control valve circuit • ECM

DTC Confirmation Procedure

1) Clear DTC. Refer to “Diagnostic Trouble Code (DTC) Clearance” in this section.
2) Start engine and keep it at idle for 10 seconds.
3) Check DTC. Refer to “Diagnostic Trouble Code (DTC) Check” in this section.

DTC Troubleshooting

Step	Action	Yes	No
1	Was “Engine and Emission Control System Check” performed?	Go to Step 2.	Go to “Engine and Emission Control System Check” in this section.
2	Oil control valve electrical circuit check 1) Disconnect connectors from ECM with ignition switch turned OFF. 2) Check for proper connection at “E119-2” and “E119-3” terminals of ECM connector. 3) If OK, measure resistance between “E119-2” and “E119-3” terminals of ECM connector. Is resistance below 10 Ω?	Go to Step 3.	Go to Step 8.
3	Oil control valve electrical circuit check Was resistance more than 6.5 Ω in Step 2?	Go to Step 4.	Go to Step 7.
4	Oil control valve electrical circuit for power short check 1) Turn ON ignition switch. 2) Measure voltage between “E119-3” terminal of ECM connector and engine ground. Is voltage below 1 V?	Go to Step 5.	“RED”, “YEL/RED”, “YEL” or “BLK/RED” wire is shorted to power supply circuit.
5	Oil control valve electrical circuit for ground short check 1) Disconnect connector from oil control valve with ignition switch turned OFF. 2) Measure resistance between “E119-3” terminal of ECM connector and engine ground. Is resistance infinity?	Go to Step 6.	“YEL/RED” wire is shorted to ground circuit.
6	Oil control valve electrical circuit for ground short check 1) Measure resistance between “E119-2” terminal of ECM connector and engine ground. Is resistance infinity?	Go to Step 9.	“BLK/RED” wire is shorted to ground circuit.
7	Oil control valve electrical circuit for short check 1) Disconnect connector from oil control valve with ignition switch turned OFF. 2) Measure resistance between “E119-3” and “E119-2” terminals of ECM connector. Is resistance infinity?	Go to Step 9.	“YEL/RED” wire is shorted to “BLK/RED” wire.
8	Oil control valve electrical circuit check 1) Disconnect connector from oil control valve with ignition switch turned OFF. 2) Measure resistance between “E119-3” terminal of ECM connector and “YEL/RED” wire terminal of oil control valve connector and between “E119-2” terminal of ECM connector and “BLK/RED” wire terminal of oil control valve connector. Is resistance below 1 Ω?	Go to Step 9.	“YEL/RED” wire or “BLK/RED” wire circuit is open or high resistance.

Step	Action	Yes	No
9	Oil control valve check 1) Check oil control valve referring to “Timing Chain Cover” in Section 6A3. Is resistance within specified value?	Substitute a known-good ECM and recheck.	Faulty oil control valve.

NOTE:

Upon completion of inspection and repair work, perform “DTC Confirmation Procedure” and confirm that the trouble has been corrected.

DTC P0011 / P0012 Camshaft Position – Timing Over-Advanced or System Performance / -Retarded

System Description

Actual value of advanced valve timing does not reach target value.
Valve timing is advanced although ECM command is most retarding.

DTC Detecting Condition and Trouble Area

DTC detecting condition	Trouble area
Actual value of advanced valve timing does not reach target value, or valve timing is advanced although ECM command is most retarding. (2 driving cycle detection logic)	• Oil control valve • Oil galleries of timing sprocket • Intake camshaft timing sprocket (Camshaft position control (VVT) actuator) • Oil control valve circuit • ECM

DTC Confirmation Procedure

WARNING:
- **When performing a road test, select a place where there is no traffic or possibility of a traffic accident and be very careful during testing to avoid occurrence of an accident.**
- **Road test should be carried out with 2 persons, a driver and a tester, on a level road.**

NOTE:

Check to make sure that the following conditions are satisfied when using this "DTC Confirmation Procedure".
- **altitude (barometric pressure): 2400 m, 8000 ft or less (560 mmHg, 75 kPa or more)**

1) Clear DTC. Refer to "Diagnostic Trouble Code (DTC) Clearance" in this section.
2) Start engine and drive vehicle under usual driving condition for 5 minutes or longer until engine is warmed up to normal operating temperature.
3) Stop vehicle.
4) Run engine at idle speed for 1 minute.
5) Start vehicle and increase vehicle speed up to 80 km/h (50 mile/h).
6) Keep vehicle speed at 80 km/h (50 mile/h) for 1 minute or longer at 5th gear position or D range.
7) Decrease vehicle speed gradually.
8) Stop vehicle and ignition switch OFF.
9) Repeat Step 4) to 7) one time.
10) Stop vehicle.
11) Check DTC. Refer to "Diagnostic Trouble Code (DTC) Check" in this section.

DTC Troubleshooting

Step	Action	Yes	No
1	Is DTC P0010 detected together?	Go to "DTC P0010 Camshaft Position Actuator Circuit" in this section.	Go to Step 2.
2	Do you have SUZUKI scan tool?	Go to Step 3.	Go to Step 5.
3	Camshaft position control check 1) With ignition switch turned OFF, connect SUZUKI scan tool. 2) Start engine and warm up to normal operating temperature. 3) Select menu to DATA LIST. 4) Check that the "VVT GAP" displayed on SUZUKI scan tool is 0 – 5°. Is it OK?	Go to Step 4.	Check valve timing referring to "Timing Chain and Chain Tensioner" in Section 6A3. If OK, go to Step 5.
4	Camshaft position control check 1) Drive vehicle the following condition. • Vehicle speed at 80 km/h (50 mile/h). • Gear position at 5th or D range. 2) Check that the "VVT GAP" displayed on SUZUKI scan tool is 0 – 5°. Is it OK?	Substitute a known-good ECM and recheck.	Go to Step 5.
5	Oil control circuit visual inspection 1) Remove cylinder head cover referring to "Cylinder Head Cover" in Section 6A3. 2) Check oil pressure leakage from oil control circuit. Is it in good condition?	Go to Step 6.	Repair or replace.
6	Oil control valve and oil gallery pipe check 1) Remove oil control valve referring to "Timing Chain Cover" in Section 6A3. 2) Remove oil gallery pipe referring to "Timing Chain Cover" in Section 6A3. 3) Check oil gallery pipe and oil control valve for clog or sludge. Are they in good condition?	Go to Step 7.	Clean oil control valve and oil gallery pipe. Replace oil control valve if a problem is not solved after cleaning oil control valve and oil gallery pipe.
7	Oil control valve electrical circuit check 1) Check that oil control valve circuit is in good condition referring to "DTC P0010 Camshaft Position Actuator Circuit" in this section. Is circuit in good condition?	Repair circuit.	Go to Step 8.
8	Oil control valve check 1) Check oil control valve referring to "Timing Chain Cover" in Section 6A3. Is it in good condition?	Replace camshaft timing sprocket.	Replace oil control valve.

NOTE:

Upon completion of inspection and repair work, perform "DTC Confirmation Procedure" and confirm that the trouble has been corrected.

DTC P0031 / P0032 HO2S Heater Control Circuit Low / High (Sensor-1)

Wiring Diagram

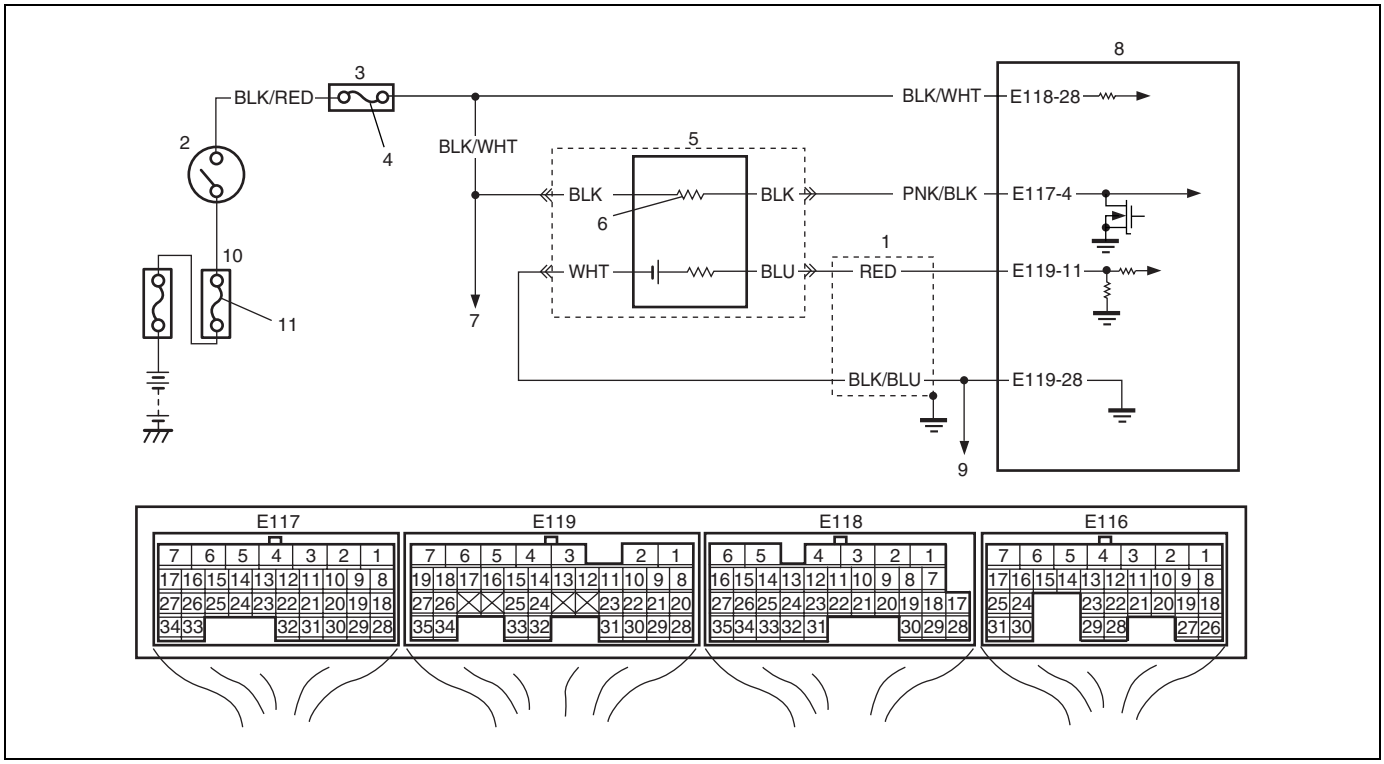

1. Shield wire	4. "IG" fuse	7. To HO2S-2 heater	10. Relay box
2. Ignition switch	5. HO2S-1	8. ECM	11. "IGN1" fuse
3. Circuit fuse box	6. Heater	9. To other sensor	

DTC Detecting Condition and Trouble Area

DTC detecting condition	Trouble area
Current of HO2S-1 heater is more than specified value or lower than specified value for 5 seconds continuously. (2 driving cycle detection logic)	• HO2S-1 heater circuit • HO2S-1 heater • ECM

DTC Confirmation Procedure

1) With ignition switch turned OFF, connect scan tool.
2) Turn ON ignition switch and clear DTC using scan tool.
3) Start engine and warm up to normal operating temperature.
4) Run engine at idle speed for 1 min. or more.
5) Check DTC and pending DTC.

DTC Troubleshooting

Step	Action	Yes	No
1	Was “Engine and Emission Control System Check” performed?	Go to Step 2.	Go to “Engine and Emission Control System Check” in this section.
2	HO2S-1 heater power circuit check 1) Disconnect connector from HO2S-1 with ignition switch turned OFF. 2) Check for proper connection to HO2S-1 at “BLK/WHT” and “PNK/BLK” wire terminals. 3) If wire and connection are OK, measure voltage between “BLK/WHT” wire terminal and engine ground with ignition switch turned ON. Is voltage over 10 V?	Go to Step 3.	“BLK/WHT” wire is open circuit or shorted to ground circuit.
3	HO2S-1 heater power circuit check 1) Disconnect connectors from ECM with ignition switch turned OFF. 2) Measure resistance between “BLK/WHT” wire terminal of HO2S-1 connector and “E118-28” terminal of ECM connector. Is resistance below 5 Ω?	Go to Step 4.	“BLK/WHT” wire high resistance circuit.
4	HO2S-1 heater drive circuit check 1) Measure resistance between “E117-4” terminal of ECM connector and vehicle body ground. Is resistance infinity?	Go to Step 5.	“PNK/BLK” wire shorted to ground circuit.
5	HO2S-1 heater drive circuit check 1) Turn ON ignition switch. 2) Measure voltage between “E117-4” terminal of ECM connector and vehicle body ground. Is voltage 0 V?	Go to Step 6.	“PNK/BLK” wire shorted to power circuit.
6	HO2S-1 heater drive circuit check 1) Connect connector to HO2S-1 with ignition switch turned OFF. 2) Turn ON ignition switch. 3) Measure voltage between “E117-4” terminal of ECM connector and vehicle body ground with disconnect connector from ECM. Is voltage over 10 V?	Go to Step 7.	“PNK/BLK” wire open circuit.
7	HO2S-1 heater check 1) Disconnect HO2S-1 coupler with ignition switch turned OFF. 2) Check HO2S-1 heater resistance referring to “Heated Oxygen Sensor (Sensor-1 and Sensor-2)” in Section 6E. Is resistance within specified value?	Go to Step 8.	Replace HO2S-1.

Step	Action	Yes	No
8	HO2S-1 heater power circuit check 1) Connect connector to HO2S-1 with ignition switch turned OFF. 2) Measure resistance between “E118-28” and “E117-4” terminals of ECM connector. It resistance below 12 Ω?	HO2S-1 heater circuit are OK. Substitute a known-good ECM and recheck.	“BLK/WHT”, “PNK/BLK” and / or “BLK” wire high resistance circuit.

NOTE:

Upon completion of inspection and repair work, perform “DTC Confirmation Procedure” and confirm that the trouble has been corrected.

DTC P0037 / P0038 HO2S Heater Control Circuit Low / High (Sensor-2)

Wiring Diagram

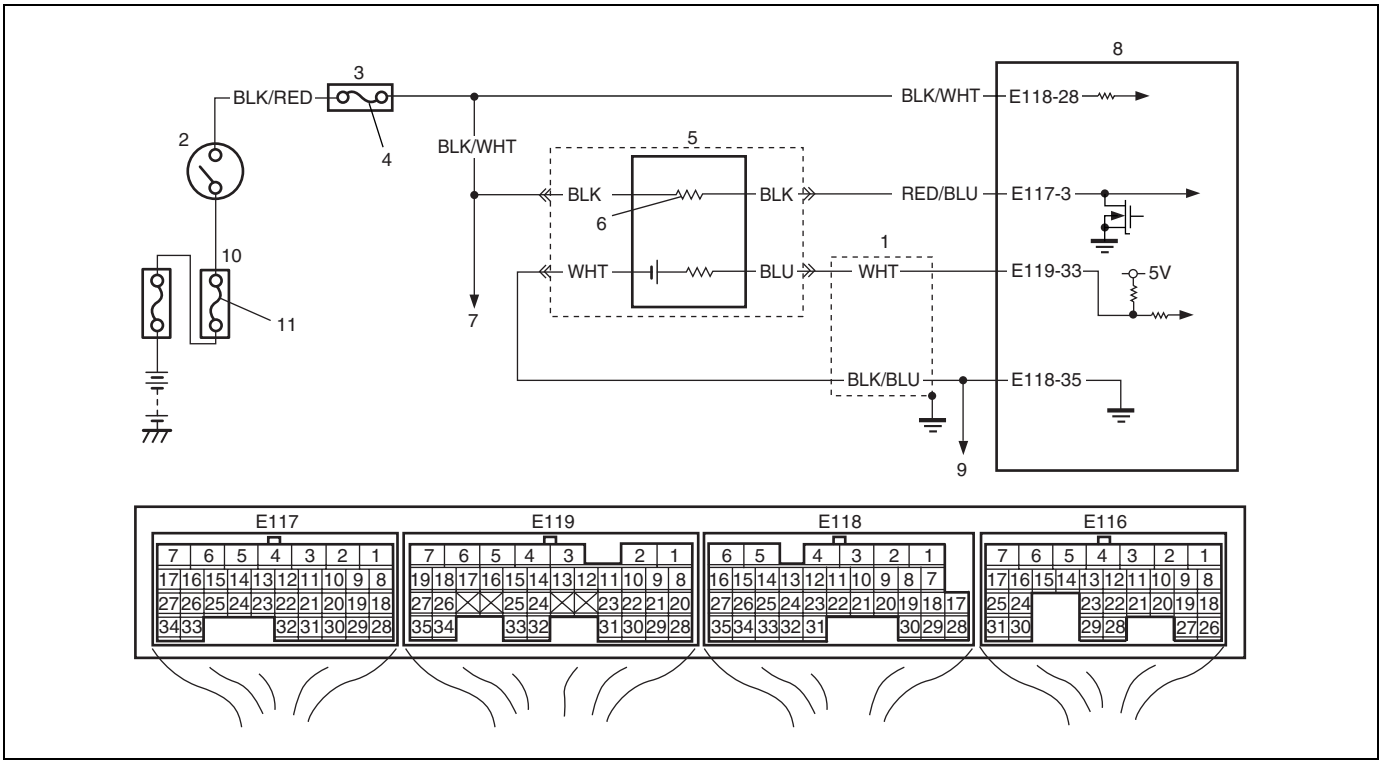

1. Shield wire	4. "IG" fuse	7. To HO2S-1 heater	10. Relay box
2. Ignition switch	5. HO2S-2	8. ECM	11. "IGN1" fuse
3. Circuit fuse box	6. Heater	9. To other sensor	

DTC Detecting Condition and Trouble Area

DTC detecting condition	Trouble area
Current of HO2S-2 heater is more than specified value or less than specified value for 5 seconds continuously (2 driving cycle detection logic)	• HO2S-2 heater • HO2S-2 heater circuit • ECM

DTC Confirmation Procedure

1) With ignition switch turned OFF, connect scan tool.
2) Turn ON ignition switch and clear DTC using scan tool.
3) Start engine and warm up to normal operating temperature.
4) Run engine at idle speed for 1 min.
5) Check DTC and pending DTC.

DTC Troubleshooting

Step	Action	Yes	No
1	Was “Engine and Emission Control System Check” performed?	Go to Step 2.	Go to “Engine and Emission Control System Check” in this section.
2	HO2S-2 heater power circuit check 1) Disconnect connector from HO2S-2 sensor with ignition switch turned OFF. 2) Check for proper connection to HO2S-2 sensor at “BLK/WHT” and “RED/BLU” wire terminals. 3) If wire and connection are OK, measure voltage between “BLK/WHT” wire terminal of HO2S-2 sensor connector and engine ground with ignition switch turned ON. Is voltage over 10 V?	Go to Step 3.	“BLK/WHT” wire open circuit or shorted to ground circuit.
3	HO2S-2 heater power circuit check 1) Disconnect connectors from ECM with ignition switch turned OFF. 2) Measure resistance between “BLK/WHT” wire terminal of HO2S-2 sensor connector and “E118-28” terminal wire of ECM connector. Is resistance below 5 Ω?	Go to Step 4.	“BLK/WHT” wire high resistance circuit.
4	HO2S-2 heater drive circuit check 1) Measure resistance between “RED/BLU” wire terminal of HO2S-2 sensor connector and vehicle body ground. Is resistance infinity?	Go to Step 5.	“RED/BLU” wire shorted to ground circuit.
5	HO2S-2 heater drive circuit check 1) Turn ON ignition switch. 2) Measure voltage between “RED/BLU” wire terminal of HO2S-2 sensor connector and vehicle body ground. Is voltage 0 V?	Go to Step 6.	“RED/BLU” wire shorted to power circuit.
6	HO2S-2 heater drive circuit check 1) Connect connector to HO2S-2 with ignition switch turned OFF. 2) Turn ON ignition switch. 3) Measure voltage between “E117-3” terminal of disconnected ECM connector and vehicle body ground. Is voltage over 10 V?	Go to Step 7.	“RED/BLU” wire open circuit.
7	HO2S-2 heater check 1) Disconnect HO2S-2 coupler with ignition switch turned OFF. 2) Check HO2S-2 heater resistance referring to “Heated Oxygen Sensor (Sensor-1 and Sensor-2)” in Section 6E. Is resistance within specified value?	Go to Step 8.	Replace HO2S-2.

Step	Action	Yes	No
8	HO2S-2 heater power circuit check 1) Connect connector to HO2S-2 with ignition switch turned OFF. 2) Measure resistance between “E118-28” and “E117-3” terminals of ECM connector. Is resistance below 30 Ω?	HO2S-2 heater circuit are OK. Substitute a known-good ECM and recheck.	“RED/BLU” wire high resistance circuit.

NOTE:

Upon completion of inspection and repair work, perform “DTC Confirmation Procedure” and confirm that the trouble has been corrected.

DTC P0101 Mass Air Flow Circuit Range / Performance

Wiring Diagram

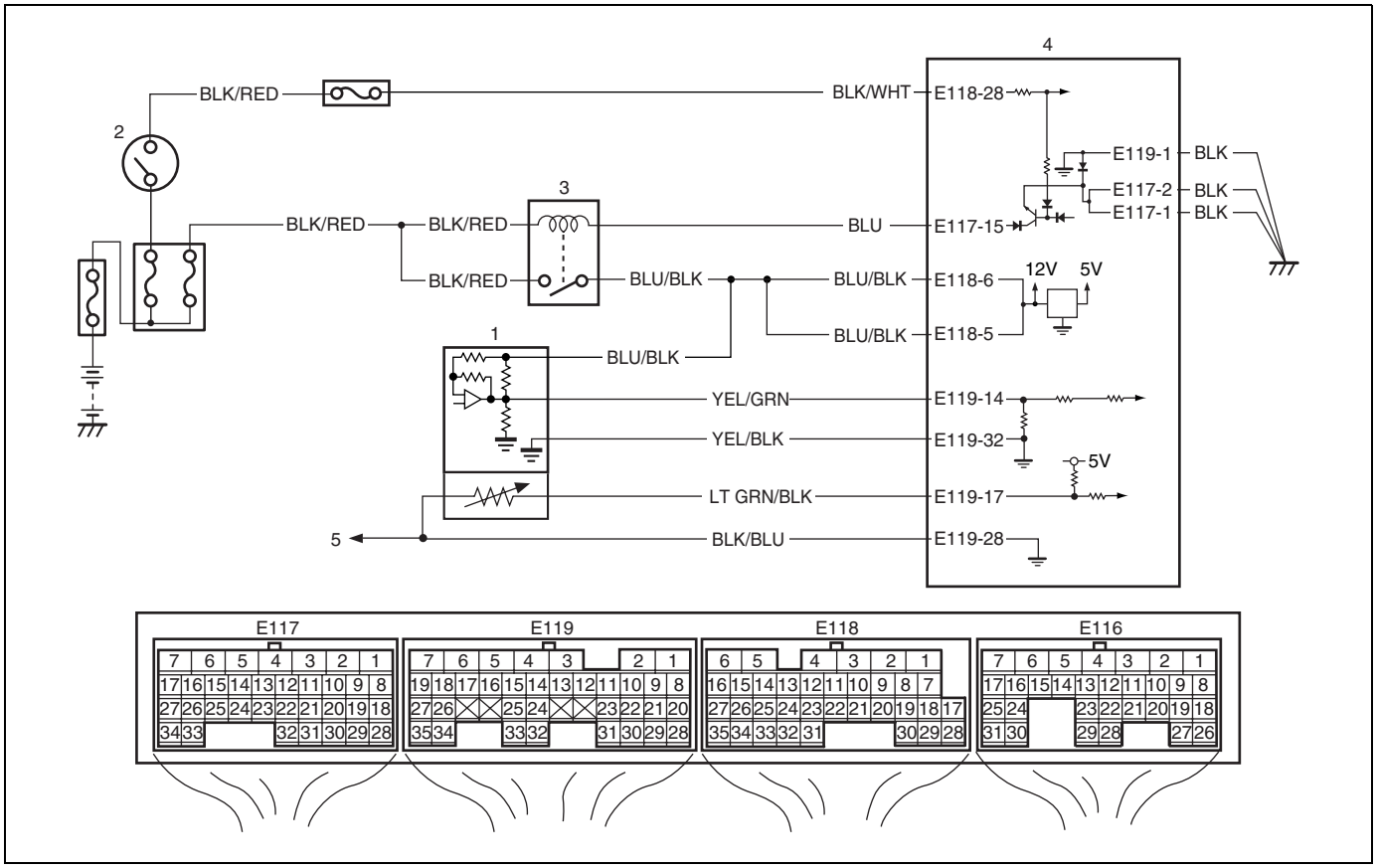

1. MAF and IAT sensor	3. Main relay	5. To other sensors
2. Ignition switch	4. ECM	

DTC Detecting Condition and Trouble Area

DTC detecting condition	Trouble area
• MAF volume is greater than 62 g/sec even if engine revolution is less than 900 rpm and intake manifold pressure is less than 70 kPa (10.15 psi) with TP less than 1.5°. • MAF volume is lower than 8 g/sec even if engine revolution is more than 2500 rpm and intake manifold pressure is more than 55 kPa (7.98 psi) with TP more than 15°. (2 driving cycle detection logic)	• Air intake system (clog or leakage) • MAF sensor circuit • MAF sensor • TP sensor • ECM

DTC Confirmation Procedure

WARNING:
- **When performing a road test, select a place where there is no traffic or possibility of a traffic accident and be very careful during testing to avoid occurrence of an accident.**
- **Road test should be carried out with 2 person, a driver and a tester, on a level road.**

NOTE:

Check to make sure that the following conditions are satisfied when using this "DTC Confirmation Procedure".
- **Intake air temperature at engine start: –10 °C (14 °F) to 80 °C (176 °F)**
- **Intake air temperature: –10 °C (14 °F) to 70 °C (158 °F)**
- **Engine coolant temperature: 70 °C (158 °F) to 150 °C (302 °F)**
- **Altitude (barometric pressure): 2400 m, 8000 ft or less (560 mmHg, 75 kPa or more)**

1) With ignition switch turned OFF, connect scan tool.
2) Turn ON ignition switch and clear DTC using scan tool.
3) Start engine and warm up to normal operating temperature. (ECT approx. 90 – 95 °C, 194 – 203 °F)
4) Drive vehicle with engine speed: more than 2500 rpm for 1 min.
5) Increase vehicle speed to 80 km/h (45 mile/h) at 5th gear.
6) Release accelerator pedal to decrease vehicle speed till 40 km/h (25 mile/h).
7) Stop vehicle and run it idle for 1 min.
8) Check DTC and pending DTC.

DTC Troubleshooting

Step	Action	Yes	No
1	Was "Engine and Emission Control System Check" performed?	Go to Step 2.	Go to "Engine and Emission Control System Check" in this section.
2	Visual inspection Check MAF sensor and air intake system for: 1) Objects which block measuring duct and resistor of MAF sensor. 2) Other air flow which does not pass the MAF sensor. Are there in good condition?	Go to Step 3.	Repair or replace.
3	MAF sensor and its circuit check 1) With ignition switch turned OFF, install scan tool. 2) Start engine and warm up to normal operation temperature. 3) Check MAF value using scan tool. (Refer to "Scan Tool Data" for normal value.) Is each value within specified?	Go to Step 11.	Go to Step 4.

Step	Action	Yes	No
4	MAF sensor output voltage check 1) Turn OFF ignition switch. 2) Measure voltage between “E119-14” and “E119-32” terminals of ECM connector referring to “Mass Air Flow (MAF) and Intake Air Temperature (IAT) Sensor (Engine Equipped with VVT System)” in Section 6E. Is each value within specified?	Poor “E119-14” and/or “E119-32” terminal connection. If OK, substitute a known-good ECM and recheck.	Go to Step 5.
5	MAF sensor power supply voltage check 1) Disconnect connector from MAF and IAT sensor with ignition switch turned OFF. 2) Turn ON ignition switch, measure voltage between engine ground and “BLU/BLK” wire terminal (2) of MAF and IAT sensor connector (1). See Fig. 1. Is voltage 10 – 14 V?	Go to Step 6.	“BLU/BLK” wire in open circuit.
6	MAF sensor ground circuit check 1) Turn OFF ignition switch, measure resistance between “YEL/BLK” wire terminal of MAF and IAT sensor connector and engine ground. Is resistance below 5 Ω?	Go to Step 8.	Go to Step 7.
7	Ground circuit check 1) Measure resistance between “E119-32” terminal of ECM connector and vehicle body ground. Is resistance below 5 Ω?	“YEL/BLK” wire in open or high resistance circuit.	ECM grounds “E119-1”, “E117-2” and/or “E117-1” circuit in open or high resistance. If wires are OK, substitute a known-good ECM and recheck.
8	MAF sensor signal circuit check 1) Disconnect connectors from ECM with ignition switch turned OFF. 2) Turn ON ignition switch, measure voltage between “YEL/GRN” wire terminal of MAF and IAT sensor connector and engine ground. Is voltage 0 V?	Go to Step 9.	“YEL/GRN” wire shorted to others circuit.
9	MAF sensor signal circuit check 1) Turn OFF ignition switch, measure resistance between “YEL/GRN” wire terminal of MAF and IAT sensor connector and vehicle body ground. Is resistance infinity?	Go to Step 10.	“YEL/GRN” wire shorted to ground circuit.
10	MAF sensor signal circuit check 1) Measure resistance between “YEL/GRN” wire terminal of MAF and IAT sensor connector and “E119-14” terminal of ECM connector. Is resistance below 3 Ω?	Faulty MAF and IAT sensor.	“YEL/GRN” wire in open or high resistance circuit.

Step	Action	Yes	No
11	Is DTC P0121 detected?	Go to “DTC P0121 Throttle Position Sensor Circuit Range / Performance” in this section.	Substitute a known-good ECM and recheck.

NOTE:

Upon completion of inspection and repair work, perform “DTC Confirmation Procedure” and confirm that the trouble has been corrected.

Fig. 1 for Step 5

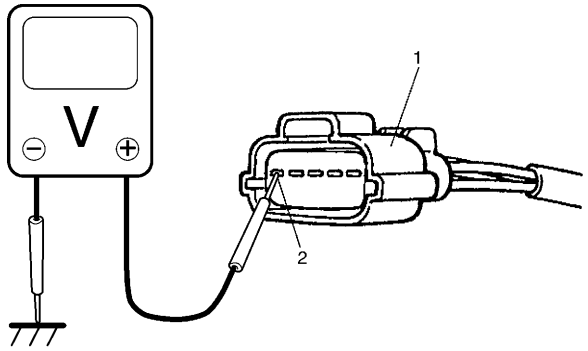

DTC P0102 Mass Air Flow Circuit Low Input

Wiring Diagram

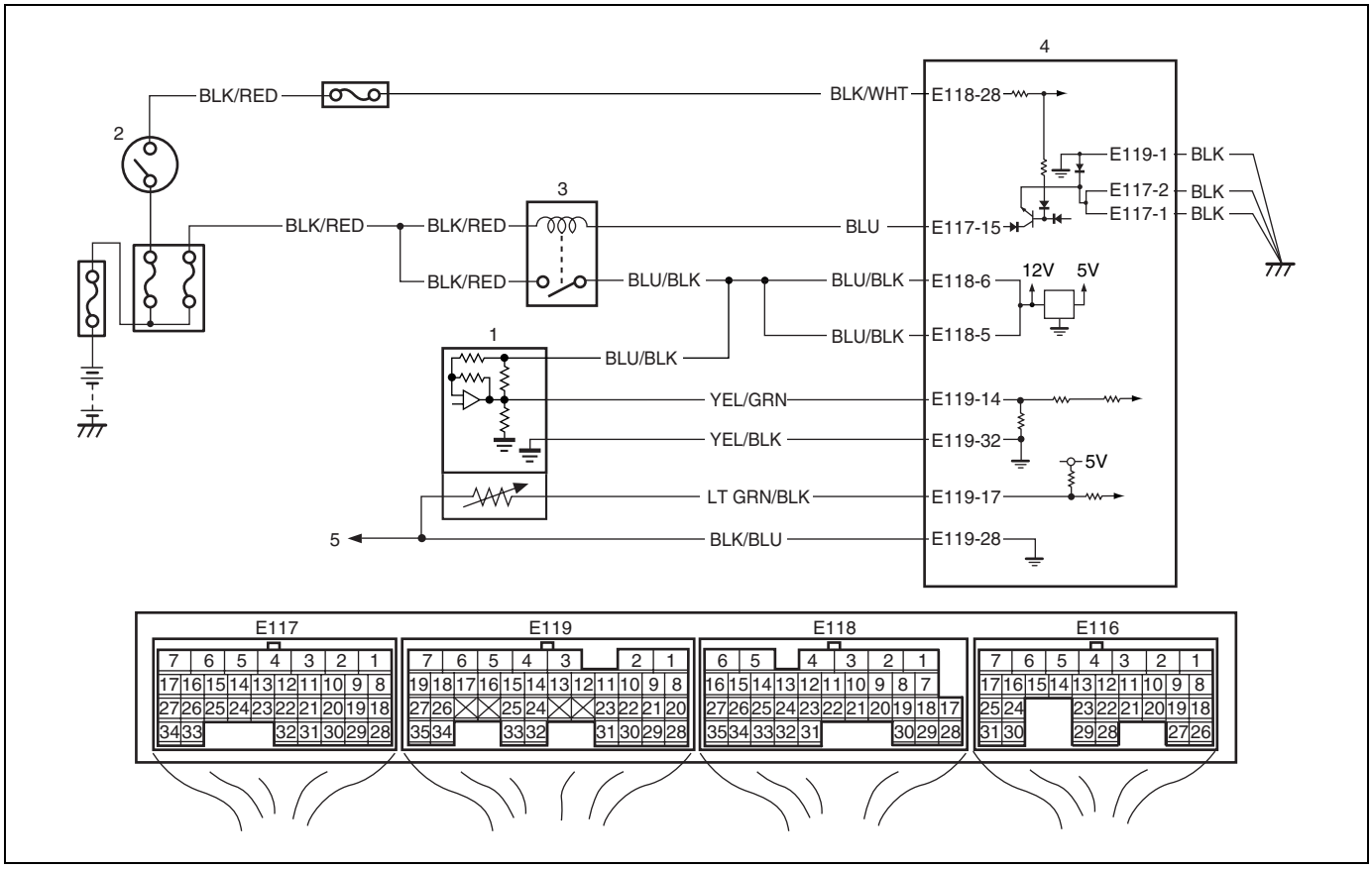

1. MAF and IAT sensor	4. ECM
2. Ignition switch	5. To other sensors
3. Main relay	

DTC Detecting Condition and Trouble Area

DTC detecting condition	Trouble area
DTC will be set when all of the following conditions are detected for 0.5 seconds continuously. • Engine is running • Voltage of MAF sensor output is less than the specified value for the specified time continuously. (1 driving cycle detection logic)	• Open or short in MAF sensor circuit • MAF sensor • ECM

DTC Confirmation Procedure

1) With ignition switch turned OFF, connect scan tool.
2) Turn ON ignition switch and clear DTC using scan tool.
3) Start engine and run it for 10 sec.
4) Check DTC and pending DTC.

DTC Troubleshooting

Step	Action	Yes	No
1	Was “Engine and Emission Control System Check” performed?	Go to Step 2.	Go to “Engine and Emission Control System Check” in this section.
2	MAF sensor and its circuit check 1) Connect scan tool to DLC with ignition switch turned OFF. 2) Start engine and check MAF value displayed on scan tool. (Refer to “Scan Tool Data” for normal value.) Is normal value indicated?	Intermittent trouble. Check for intermittent referring to “Intermittent and Poor Connection” in Section 0A.	Go to Step 3.
3	MAF sensor power supply voltage check 1) Disconnect connector from MAF and IAT sensor with ignition switch turned OFF. 2) Turn ON ignition switch, measure voltage between engine ground and “BLU/BLK” wire terminal of MAF and IAT sensor connector. Is voltage 10 – 14 V?	Go to Step 4.	“BLU/BLK” wire in open circuit.
4	MAF sensor ground circuit check 1) Turn OFF ignition switch, measure resistance between “YEL/BLK” wire terminal of MAF and IAT sensor connector and engine ground. Is resistance below 5 Ω?	Go to Step 6.	Go to Step 5.
5	Ground circuit check 1) Measure resistance between “E119-32” terminal of ECM connector and vehicle body ground. Is resistance below 5 Ω?	“YEL/BLK” wire in open or high resistance circuit.	ECM grounds “E119-1”, “E117-2” and/or “E117-1” circuit open or high resistance. If wires are OK, substitute a known-good ECM and recheck.
6	MAF sensor signal circuit check 1) Disconnect connectors from ECM with ignition switch turned OFF. 2) Measure voltage between “YEL/GRN” wire terminal of MAF and IAT sensor connector and engine ground with ignition switch turned ON. Is voltage 0 V?	Go to Step 7.	“YEL/GRN” wire shorted to other circuit.
7	MAF sensor signal circuit check 1) Measure resistance between “YEL/GRN” wire terminal of MAF and IAT sensor connector and vehicle body ground with ignition switch turned OFF. Is resistance infinity?	Go to Step 8.	“YEL/GRN” wire shorted to ground circuit.

Step	Action	Yes	No
8	MAF sensor signal circuit check 1) Measure resistance between "YEL/GRN" wire terminal of MAF and IAT sensor connector and "E119-14" terminal of ECM connector. Is resistance below 3 Ω?	Go to Step 9.	"YEL/GRN" wire in open or high resistance circuit.
9	MAF sensor output signal check 1) Connect connectors to MAF and IAT sensor and ECM with ignition switch turned OFF. 2) Measure voltage between "E119-14" and "E119-32" terminals of ECM connector referring to "Mass Air Flow (MAF) and Intake Air Temperature (IAT) Sensor (Engine Equipped with VVT System)" in Section 6E. Is each value within specified?	Substitute a known-good ECM and recheck.	Faulty MAF and IAT sensor.

NOTE:

Upon completion of inspection and repair work, perform "DTC Confirmation Procedure" and confirm that the trouble has been corrected.

DTC P0103 Mass Air Flow Circuit High Input

Wiring Diagram

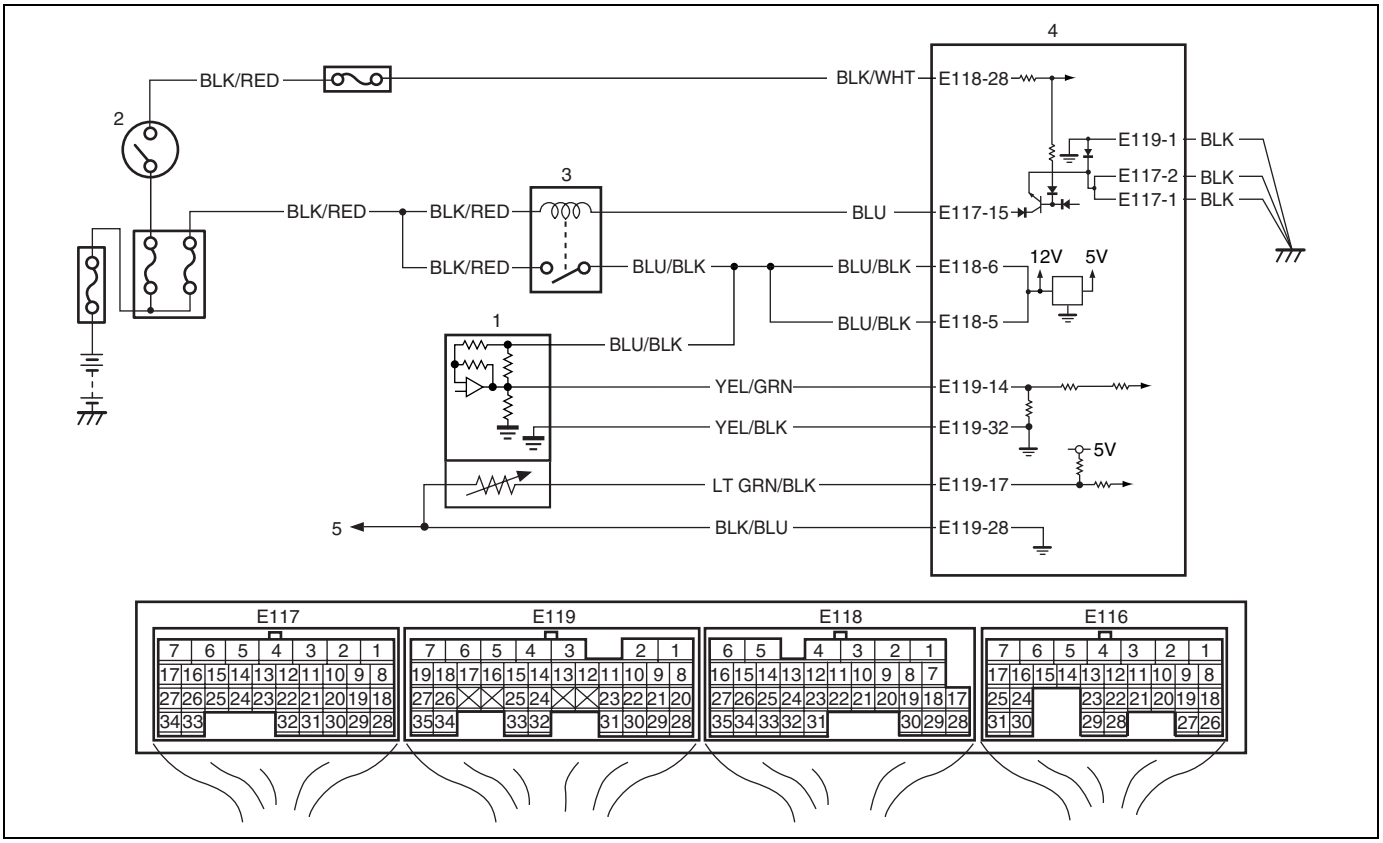

1. MAF and IAT sensor	4. ECM
2. Ignition switch	5. To other sensors
3. Main relay	

DTC Detecting Condition and Trouble Area

DTC detecting condition	Trouble area
DTC will be set when all of the following conditions are detected for 0.5 seconds continuously. • Engine is running • Voltage of MAF sensor output is more than the specified value for the specified time continuously. (1 driving cycle detection logic)	• Open or short in MAF sensor circuit • MAF sensor • ECM

DTC Confirmation Procedure

1) With ignition switch turned OFF, connect scan tool.
2) Turn ON ignition switch and clear DTC using scan tool.
3) Start engine and run it for 10 sec.
4) Check DTC and pending DTC.

DTC Troubleshooting

Step	Action	Yes	No
1	Was “Engine and Emission Control System Check” performed?	Go to Step 2.	Go to “Engine and Emission Control System Check” in this section.

Step	Action	Yes	No
2	MAF sensor and its circuit check 1) Connect scan tool to DLC with ignition switch turned OFF. 2) Start engine and check MAF value displayed on scan tool. (Refer to "Scan Tool Data" for normal value.) Is normal value indicated?	Intermittent trouble. Check for intermittent referring to "Intermittent and Poor Connection" in Section 0A.	Go to Step 3.
3	MAF sensor power supply voltage check 1) Disconnect connector from MAF and IAT sensor with ignition switch tuned OFF. 2) Turn ON ignition switch, measure voltage between engine ground and "BLU/BLK" wire terminal of MAF and IAT sensor connector. Is voltage 10 – 14 V?	Go to Step 4.	"BLU/BLK" wire in open circuit.
4	MAF sensor ground circuit check 1) Turn OFF ignition switch, measure resistance between "YEL/BLK" wire terminal of MAF and IAT sensor connector and engine ground. Is resistance below 5 Ω?	Go to Step 6.	Go to Step 5.
5	Ground circuit check 1) Measure resistance between "E119-32" terminal of ECM connector and vehicle body ground. Is resistance below 5 Ω?	"YEL/BLK" wire in open or high resistance circuit.	ECM grounds "E119-1", "E117-2" and/or "E117-1" circuit in open or high resistance. If wires are OK, substitute a known-good ECM and recheck.
6	MAF sensor signal circuit check 1) Disconnect connectors from ECM with ignition switch turned OFF. 2) Measure voltage between "YEL/GRN" wire terminal of MAF and IAT sensor connector and engine ground. Is voltage 0 V?	Go to Step 7.	"YEL/GRN" wire shorted to other circuits.
7	MAF sensor output signal check 1) Connect connector to MAF and IAT sensor and ECM with ignition switch turned OFF. 2) Measure voltage between "E119-14" and "E119-32" terminal of ECM connector referring to "Mass Air Flow (MAF) and Intake Air Temperature (IAT) Sensor (Engine Equipped with VVT System)" in Section 6E. Is each value within specified?	Substitute a known-good ECM and recheck.	Faulty MAF and IAT sensor.

NOTE:

Upon completion of inspection and repair work, perform "DTC Confirmation Procedure" and confirm that the trouble has been corrected.

DTC P0106 Manifold Absolute Pressure Range / Performance

Wiring Diagram

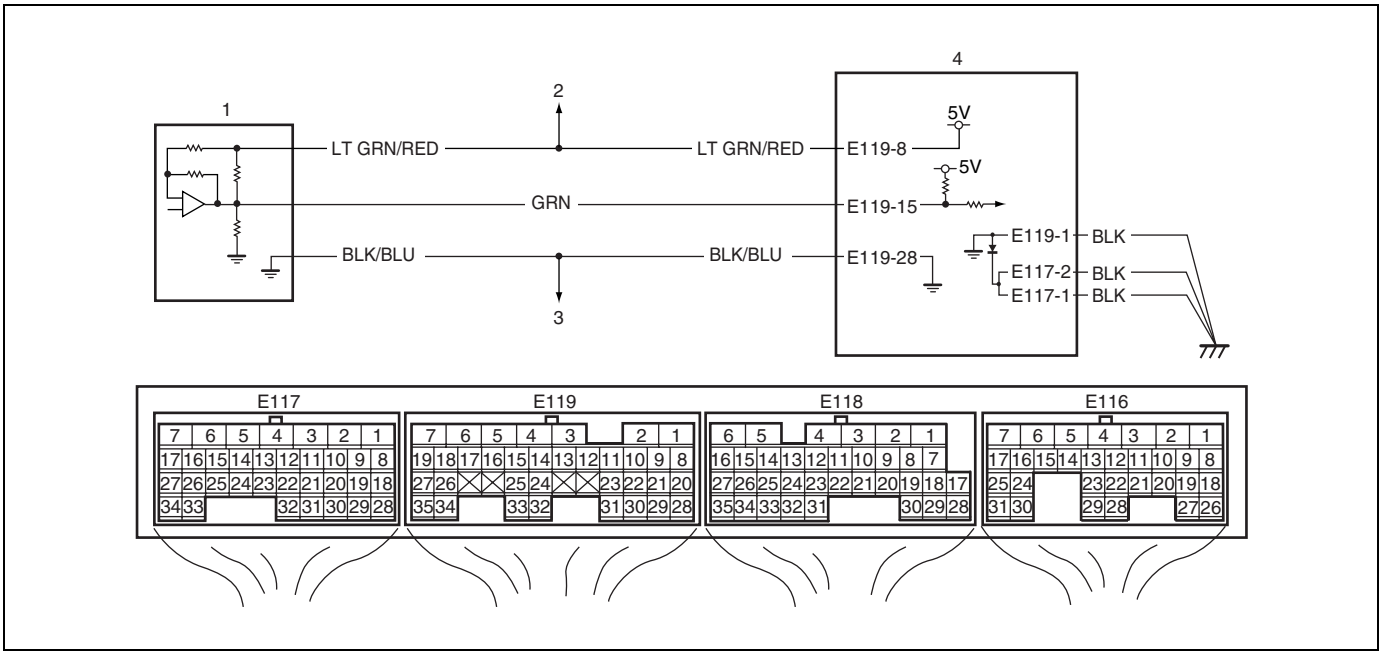

1. Manifold absolute pressure sensor	3. To other sensors
2. To TP sensor	4. ECM

DTC Detecting Condition and Trouble Area

DTC detecting condition	Trouble area
• Difference between Max. manifold absolute pressure value and Min. manifold pressure value is less than 1.3 kPa (0.19 psi) at engine idling. • Difference between barometric pressure value and manifold pressure value is less than 33.3 kPa (4.83 psi) for 2 sec. at 2000 r/mini. or more. (2 driving cycle detection logic)	• Manifold absolute pressure sensor • Manifold absolute pressure sensor vacuum passage • Air intake system • ECM

DTC Confirmation Procedure

NOTE:

Check to make sure that the following conditions are satisfied when using this "DTC Confirmation Procedure".

- **Intake air temperature at engine start: –10 °C (14 °F) to 80 °C (176 °F)**
- **Intake air temperature: –10 °C (14 °F) to 70 °C (158 °F)**
- **Engine coolant temperature: 70 °C (158 °F) to 150 °C (302 °F)**
- **Altitude (barometric pressure): 2400 m, 8000 ft or less (560 mmHg, 75 kPa or more)**

1) Connect scan tool to DLC with ignition switch OFF.
2) Turn ON ignition switch and clear DTC using scan tool and warm up engine completely.
3) Run engine at idle speed for 1 min.
4) Check DTC and pending DTC.

DTC Troubleshooting

Step	Action	Yes	No
1	Was “Engine and Emission Control System Check” performed?	Go to Step 2.	Go to “Engine and Emission Control System Check” in this section.
2	MAP sensor and its circuit check 1) Connect scan tool to DLC with ignition switch turned OFF. 2) Turn ignition switch ON. 3) Check DTC. Is there DTC P0107 or DTC P0108?	Go to applicable DTC diag. flow.	Go to Step 3.
3	MAP sensor output signal check 1) Check MAP sensor according to “Manifold Absolute Pressure Sensor (MAP Sensor)” in Section 6E. Is it in good condition?	Go to Step 4.	Faulty MAP sensor.
4	MAP sensor circuit check 1) Check MAP sensor circuit referring to Step 3 to 6 of “DTC P0107 Manifold Absolute Pressure Circuit Low Input” or Step 3 to 8 of “DTC P0108 Manifold Absolute Pressure Circuit High Input” in this section. Is circuit in good condition?	Go to Step 5.	Repair or replace.
5	Air intake system check 1) Check air intake system for clog or leak. Is it in good condition?	Substitute a known-good ECM and recheck.	Repair or replace.

NOTE:

Upon completion of inspection and repair work, perform “DTC Confirmation Procedure” and confirm that the trouble has been corrected.

DTC P0107 Manifold Absolute Pressure Circuit Low Input

Wiring Diagram

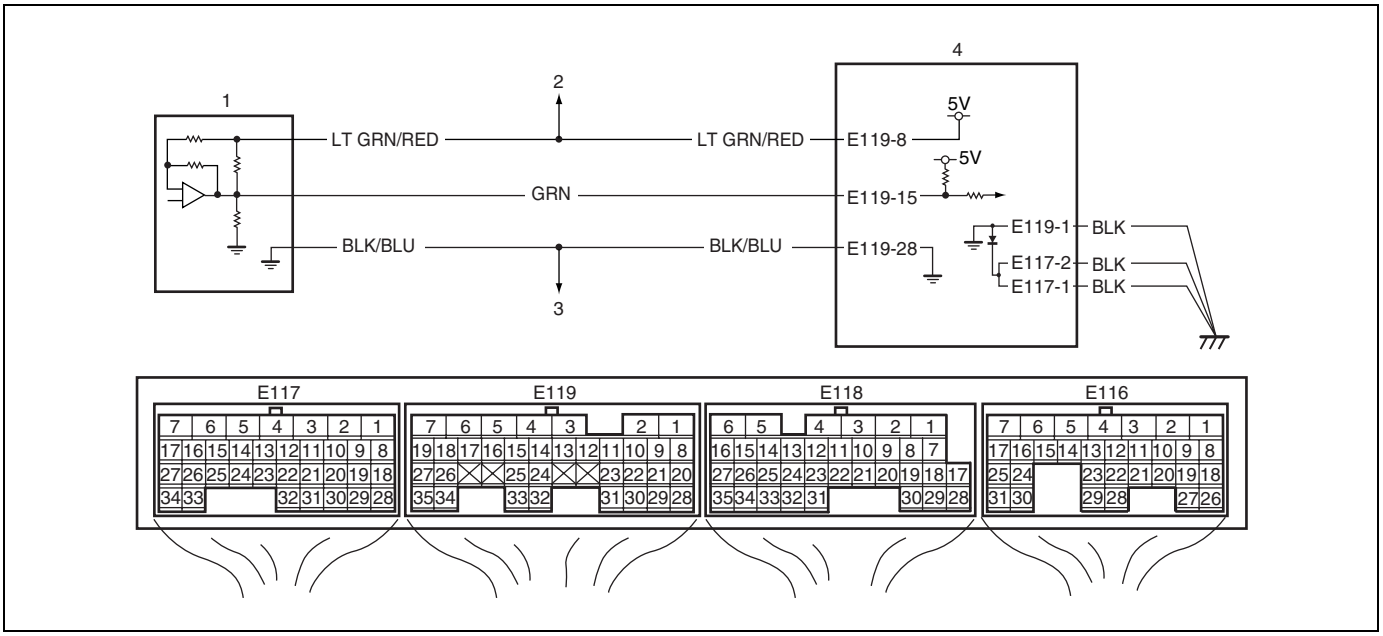

1. Manifold absolute pressure sensor	3. To other sensors
2. To TP sensor	4. ECM

DTC Detecting Condition and Trouble Area

DTC detecting condition	Trouble area
Manifold absolute pressure sensor output voltage is lower than specified value for specified time continuously. (1 driving cycle detection logic)	• Manifold absolute pressure sensor circuit • Manifold absolute pressure sensor • TP sensor • ECM

DTC Confirmation Procedure

1) Connect scan tool to DLC with ignition switch OFF.
2) Turn ON ignition switch and clear DTC using scan tool and warm up engine completely.
3) Run engine at idle speed for 1 min.
4) Check DTC and pending DTC.

DTC Troubleshooting

Step	Action	Yes	No
1	Was “Engine and Emission Control System Check” performed?	Go to Step 2.	Go to “Engine and Emission Control System Check” in this section.
2	MAP sensor and its circuit check 1) Connect scan tool to DLC with ignition switch turned OFF. 2) Turn ignition switch ON. 3) Check intake manifold pressure displayed on scan tool. Is it 0 kPa (0 in.Hg)?	Go to Step 3.	Intermittent trouble. Check for intermittent referring to “Intermittent and Poor Connection” in Section 0A.

Step	Action	Yes	No
3	MAP sensor power supply voltage check 1) Disconnect connector from MAP sensor with ignition switch turned OFF. 2) Check for proper connection of MAP sensor at "LT GRN/RED", "GRN" and "BLK/BLU" wire terminals. 3) Turn ON ignition switch, measure voltage between engine ground and "LT GRN/RED" wire terminal of MAP sensor connector. See Fig. 1. Is voltage 4 – 6 V?	Go to Step 5.	Go to Step 4.
4	MAP sensor power supply circuit check 1) Disconnect connector from TP sensor with ignition switch turned OFF. 2) Turn ON ignition switch, measure voltage between vehicle body ground and "LT GRN/RED" wire terminal of MAP sensor connector. Is voltage 4 – 6 V?	Faulty TP sensor.	"LT GRN/RED" wire shorted to ground circuit. If wires are OK, substitute a known-good ECM and recheck.
5	MAP sensor signal circuit check 1) Measure voltage between "GRN" wire terminal of MAP sensor connector and engine ground. Is voltage 4 – 6 V?	Go to Step 7.	Go to Step 6.
6	MAP sensor signal circuit check 1) Disconnect connectors from ECM with ignition switch turned OFF. 2) Measure resistance between "E119-15" terminal of ECM connector and vehicle body ground. Is resistance infinity?	Go to Step 7.	"GRN" wire shorted to ground circuit.
7	MAP sensor output signal check 1) Check MAP sensor according to "Manifold Absolute Pressure Sensor (MAP Sensor)" in Section 6E. Is it in good condition?	Substitute a known-good ECM and recheck.	Faulty MAP sensor.

NOTE:

Upon completion of inspection and repair work, perform "DTC Confirmation Procedure" and confirm that the trouble has been corrected.

Fig. 1 for Step 3

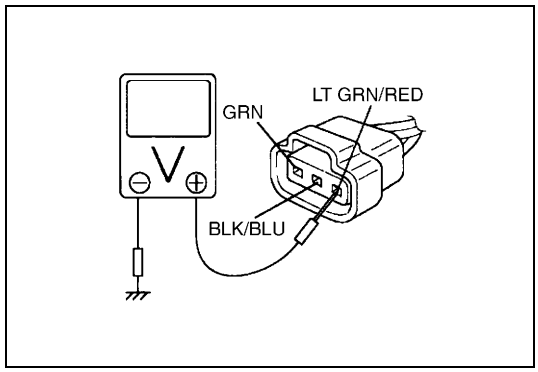

DTC P0108 Manifold Absolute Pressure Circuit High Input

Wiring Diagram

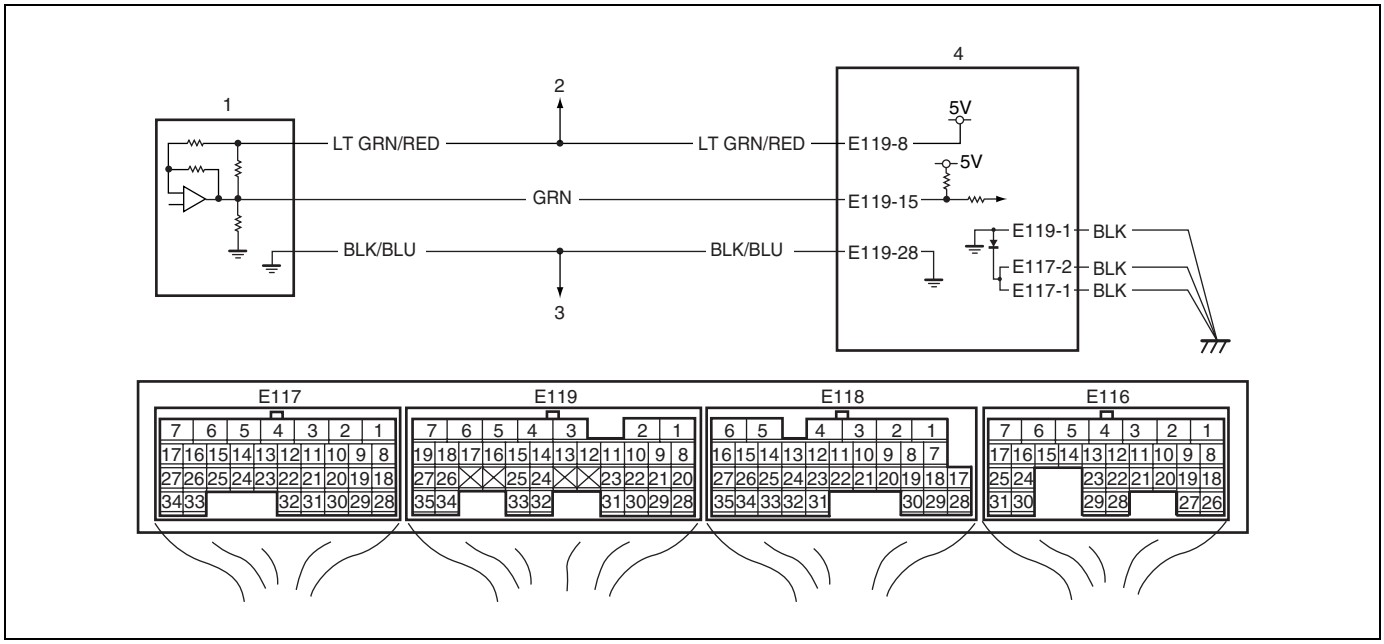

1. Manifold absolute pressure sensor	3. To other sensors
2. To TP sensor	4. ECM

DTC Detecting Condition and Trouble Area

DTC detecting condition	Trouble area
Manifold absolute pressure sensor output voltage is higher than specified value for specified time continuously. (1 driving cycle detection logic)	• Manifold absolute pressure sensor circuit • Manifold absolute pressure sensor • TP sensor • ECM

NOTE:

When DTC P0113, P0118 and P0123 are indicated together, it is possible that "BLK/BLU" wire circuit is open.

DTC Confirmation Procedure

1) Connect scan tool to DLC with ignition switch turned OFF.
2) Turn ON ignition switch and clear DTC using scan tool and warm up engine completely.
3) Run engine at idle speed for 1 min.
4) Check DTC and pending DTC.

DTC Troubleshooting

Step	Action	Yes	No
1	Was "Engine and Emission Control System Check" performed?	Go to Step 2.	Go to "Engine and Emission Control System Check" in this section.

Step	Action	Yes	No
2	MAP sensor and its circuit check 1) Connect scan tool to DLC with ignition switch OFF. 2) Turn ignition switch ON. 3) Check intake manifold pressure displayed on scan tool. Is it 127 kPa (37.5 in.Hg)?	Go to Step 3.	Intermittent trouble. Check for intermittent referring to “Intermittent and Poor Connection” in Section 0A.
3	MAP sensor power supply voltage check 1) Disconnect connector from MAP sensor with ignition switch turned OFF. 2) Check for proper connection of MAP sensor at “LT GRN/RED”, “GRN” and “BLK/BLU” wire terminals. 3) Turn ON ignition switch, measure voltage between engine ground and “LT GRN/RED” wire terminal of MAP sensor connector. See Fig. 1. Is voltage 4 – 6 V?	Go to Step 5.	Go to Step 4.
4	MAP sensor power supply circuit check 1) Disconnect connector from TP sensor with ignition switch turned OFF. 2) Turn ON ignition switch, measure voltage between vehicle body ground and “LT GRN/RED” wire terminal of MAP sensor connector. Is voltage 4 – 6 V?	Faulty TP sensor.	“LT GRN/RED” wire in open or shorted to power circuit.
5	MAP sensor ground circuit check 1) Measure resistance between “BLK/BLU” wire terminal of MAP sensor connector and engine ground with ignition switch turned OFF. Is resistance below 5 Ω?	Go to Step 7.	Go to Step 6.
6	Ground circuit check 1) Measure resistance between “E119-28” terminal of ECM connector and vehicle body ground. Is resistance below 5 Ω?	“BLK/BLU” wire in open or high resistance circuit.	ECM grounds “E119-1”, “E117-2” and/or “E117-1” circuit in open or high resistance. If wires are OK, substitute a known-good ECM and recheck.
7	MAP sensor signal circuit check 1) Turn ON ignition switch. 2) Measure voltage between “GRN” wire terminal of MAP sensor connector and engine ground. Is voltage 4 – 6 V?	Go to Step 9.	Go to Step 8.

Step	Action	Yes	No
8	MAP sensor signal circuit check 1) Disconnect connectors from ECM with ignition switch turned OFF. 2) Measure resistance between “GRN” wire terminal of MAP sensor connector and “E119-15” terminal of ECM connector. Is resistance below 2 Ω?	“GRN” wire shorted to power supply circuit.	“GRN” wire in open or high resistance circuit.
9	MAP sensor output signal check 1) Check MAP sensor according to “Manifold Absolute Pressure Sensor (MAP Sensor)” in Section 6E. Is it in good condition?	Substitute a known-good ECM and recheck.	Faulty MAP sensor.

NOTE:

Upon completion of inspection and repair work, perform “DTC Confirmation Procedure” and confirm that the trouble has been corrected.

Fig. 1 for Step 3

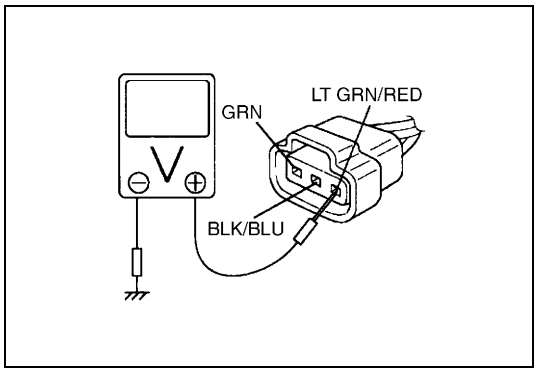

DTC P0111 Intake Air Temperature Circuit Range / Performance

Wiring Diagram

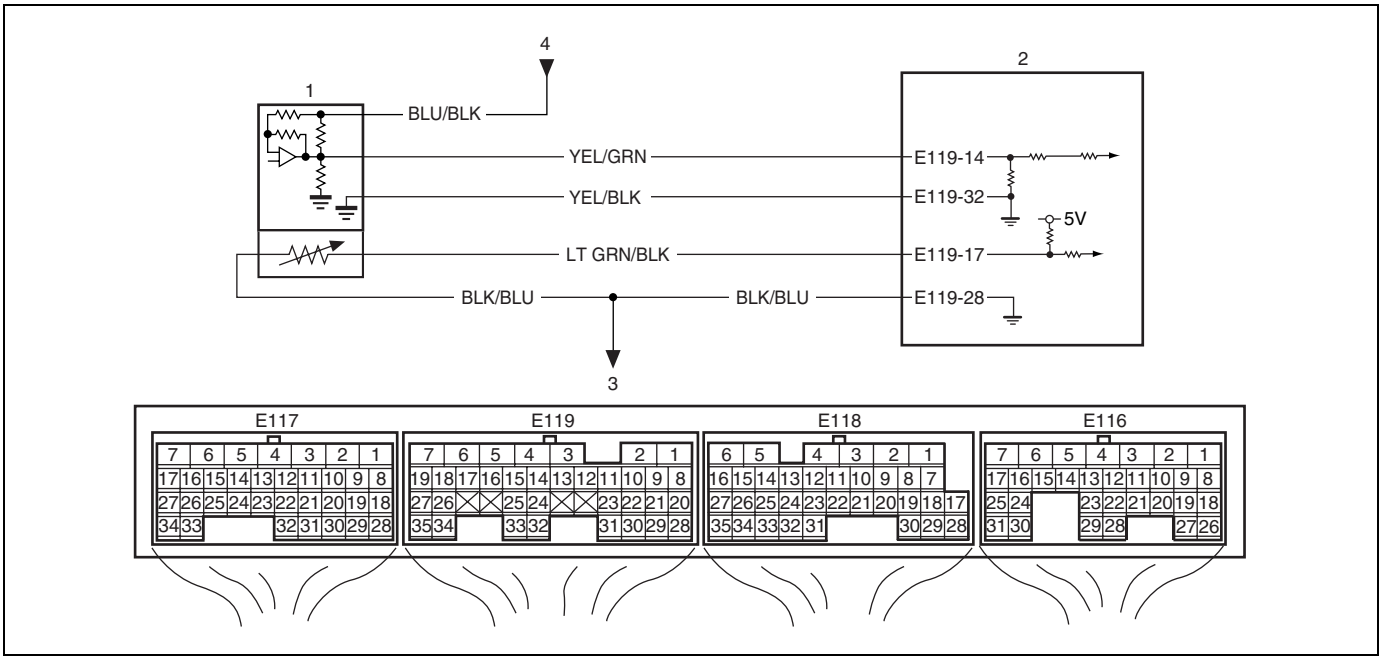

1. MAF and IAT sensor	3. To other sensors
2. ECM	4. From main relay

DTC Detecting Condition and Trouble Area

DTC detecting condition	Trouble area
Difference of maximum IAT minus minimum IAT is less than 0.3 °C (32.5 °F) while ECT is over 70 °C (158 °F) after 10 min from cold engine start (ECT is lower than 30 °C (86 °F) at engine start). (2 driving cycle detection logic)	• High resistance in the circuit • MAF and IAT sensor • ECM

DTC Confirmation Procedure

NOTE:

Check to make sure that the following conditions are satisfied when using this "DTC Confirmation Procedure".

- **Intake air temperature at engine start: –10 °C (14 °F) to 80 °C (176 °F)**
- **Intake air temperature: –10 °C (14 °F) to 70 °C (158 °F)**
- **Engine coolant temperature at engine start: less than 30 °C (86 °F)**
- **Engine coolant temperature: 70 °C (158 °F) to 150 °C (302 °F)**
- **Altitude (barometric pressure): 2400 m, 8000 ft or less (560 mmHg, 75 kPa or more)**

1) With ignition switch turned OFF, connect scan tool.
2) Turn ON ignition switch, clear DTC using scan tool.
3) Start engine and warm up to normal operating temperature. (ECT approx. 70 – 205 °C, 158 – 401 °F)
4) Run engine at idle speed for 10 min. or more.
5) Check DTC and pending DTC.

DTC Troubleshooting

Step	Action	Yes	No
1	Was “Engine and Emission Control System Check” performed?	Go to Step 2.	Go to “Engine and Emission Control System Check” in this section.
2	IAT sensor and its circuit check 1) Connect scan tool to DLC with ignition switch turned OFF. 2) Turn ignition switch to ON position. 3) Check intake air temp. displayed on scan tool. Is –40 °C (–40 °F) or 119 °C (246 °F) indicated?	Go to Step 3.	Intermittent trouble. Check for intermittent referring to “Intermittent and Poor Connection” in Section 0A.
3	Wire harness check 1) Disconnect MAF and IAT sensor connector (1) with ignition switch turned OFF. 2) Check for proper connection to MAF and IAT sensor connector (1) at “LT GRN/BLK” and “BLK/BLU” wire terminals. See Fig. 1. 3) If OK, then with ignition switch turned ON. Is voltage applied to “LT GRN/BLK” wire terminal about 4 – 6 V?	Go to Step 8.	Go to Step 4.
4	ECM voltage check 1) Turn OFF ignition switch. 2) Check for proper connection of ECM connector at “E119-17” terminal. 3) If OK, then turn ON ignition switch, measure voltage between “E119-17” terminal of ECM connector and vehicle body ground. Is voltage about 4 – 6 V at terminal?	Open wire in “LT GRN/BLK” circuit. If wire and connection are OK, go to Step 5.	Go to Step 5.
5	Wire circuit check 1) Disconnect connectors from ECM with ignition switch turned OFF. 2) Measure resistance between “LT GRN/BLK” wire terminal of MAF and IAT sensor connector and vehicle body ground. Is resistance infinity?	Go to Step 6.	“LT GRN/BLK” wire shorted to ground or other circuits. If wire are OK, substitute a known-good ECM and recheck.
6	Wire circuit check 1) Turn ignition switch to ON position. 2) Measure voltage between “LT GRN/BLK” wire terminal of MAF and IAT sensor connector and body ground. Is voltage about 0 V?	Go to Step 7.	“LT GRN/BLK” wire shorted to other circuits. If wire are OK, substitute a known-good ECM and recheck.
7	Wire circuit check 1) Measure resistance between “E119-17” terminal of ECM connector and “LT GRN/BLK” wire terminal of MAF and IAT sensor connector with ignition switch turned OFF. Is resistance below 3 Ω?	Go to Step 8.	High resistance wire in “LT GRN/BLK” circuit.

Step	Action	Yes	No
8	Ground circuit check 1) Connect connectors to ECM. 2) Check for proper connection of MAF and IAT sensor connector at “BLK/BLU” wire terminal. 3) Measure resistance between “BLK/BLU” wire terminal of MAF and IAT sensor connector and vehicle body ground with ignition switch turned OFF. Is resistance below 5 Ω?	Go to Step 10.	Go to Step 9.
9	Ground circuit check 1) Measure resistance between “E119-28” terminal of ECM connector and vehicle body ground. Is resistance below 3 Ω?	Open or high resistance wire in “BLK/BLU” circuit. Poor “E119-28” connection.	Faulty ECM ground circuit. If circuit are OK, substitute a known-good ECM and recheck.
10	IAT sensor check 1) Check IAT sensor according to “Mass Air Flow (MAF) and Intake Air Temperature (IAT) Sensor (Engine Equipped with VVT System)” in Section 6E. Is it in good condition?	Substitute a known-good ECM and recheck.	Replace MAF and IAT sensor.

NOTE:

Upon completion of inspection and repair work, perform “DTC Confirmation Procedure” and confirm that the trouble has been corrected.

Fig. 1 for Step 3

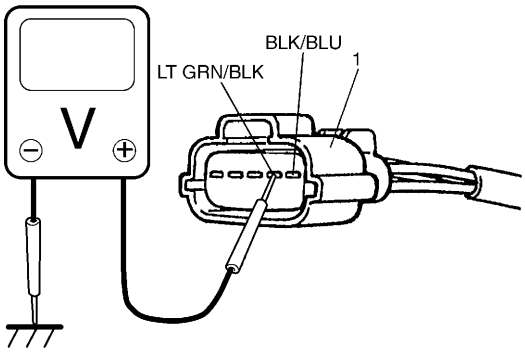

DTC P0112 Intake Air Temperature Sensor Circuit Low

Wiring Diagram

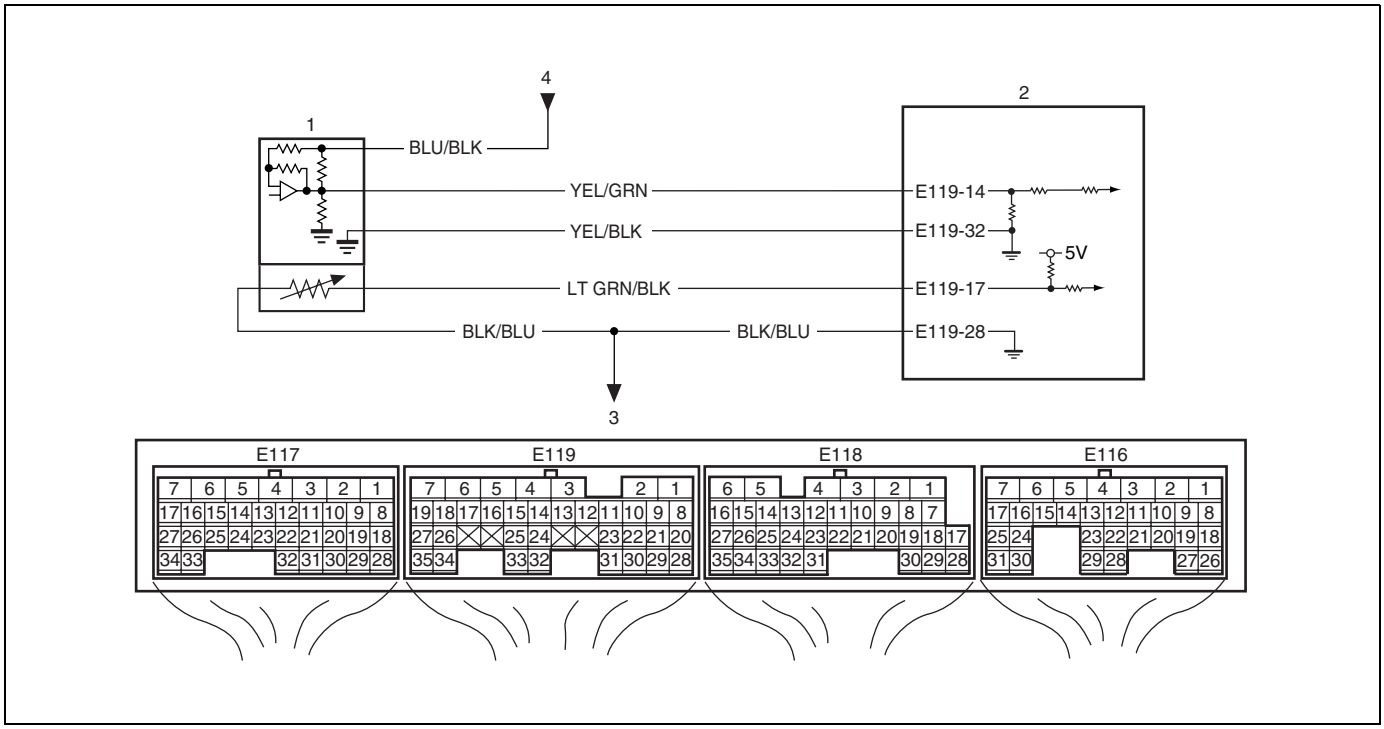

1. MAF and IAT sensor	3. To other sensors
2. ECM	4. From main relay

DTC Detecting Condition and Trouble Area

DTC detecting condition	Trouble area
DTC will be set when all of the following conditions are detected for 0.5 seconds continuously. • Engine is running • Voltage of IAT sensor output is less than the specified value (High intake air temperature (low voltage / low resistance)) (1 driving cycle detection logic)	• IAT sensor circuit • IAT sensor • ECM

DTC Confirmation Procedure

1) With ignition switch turned OFF, connect scan tool.
2) Turn ON ignition switch and clear DTC using scan tool.
3) Start engine and run it for 10 sec.
4) Check DTC and pending DTC.

DTC Troubleshooting

Step	Action	Yes	No
1	Was “Engine and Emission Control System Check” performed?	Go to Step 2.	Go to “Engine and Emission Control System Check” in this section.

Step	Action	Yes	No
2	IAT sensor and its circuit check 1) Connect scan tool to DLC with ignition switch turned OFF. 2) Turn ON ignition switch. 3) Check intake air temp. displayed on scan tool. Is 119 °C (246 °F) indicated?	Go to Step 3.	Intermittent trouble. Check for intermittent referring to “Intermittent and Poor Connection” in Section 0A.
3	ECM voltage check 1) Disconnect connector from MAF and IAT sensor with ignition switch turned OFF. 2) Check for proper connection to MAF and IAT sensor at “LT GRN/BLK” and “BLK/BLU” wire terminals. 3) If OK, then turn ON ignition switch, measure voltage between “LT GRN/BLK” wire terminal of IAT sensor connector (1) and vehicle body ground. See Fig. 1. Is voltage about 4 – 6 V?	Go to Step 6.	Go to Step 4.
4	IAT circuit insulation check 1) Disconnect connectors from ECM with ignition switch turned OFF. 2) Measure resistance between “LT GRN/BLK” wire terminal of MAF and IAT sensor connector and vehicle body ground. Is resistance infinity?	Go to Step 5.	“LT GRN/BLK” wire shorted to ground circuit. If wire are OK, substitute a known-good ECM and recheck.
5	IAT short circuit check 1) Turn ON ignition switch. 2) Measure voltage between “LT GRN/BLK” wire terminal of MAF and IAT sensor connector and vehicle body ground. Is voltage about 0 V?	Go to Step 6.	“LT GRN/BLK” wire shorted to other circuits. If wire are OK, substitute a known-good ECM and recheck.
6	IAT sensor for performance check 1) Check IAT sensor according to “Mass Air Flow (MAF) and Intake Air Temperature (IAT) Sensor (Engine Equipped with VVT System)” in Section 6E. Is it in good condition?	Substitute a known-good ECM and recheck.	Replace MAF and IAT sensor.

NOTE:

Upon completion of inspection and repair work, perform “DTC Confirmation Procedure” and confirm that the trouble has been corrected.

Fig. 1 for Step 3

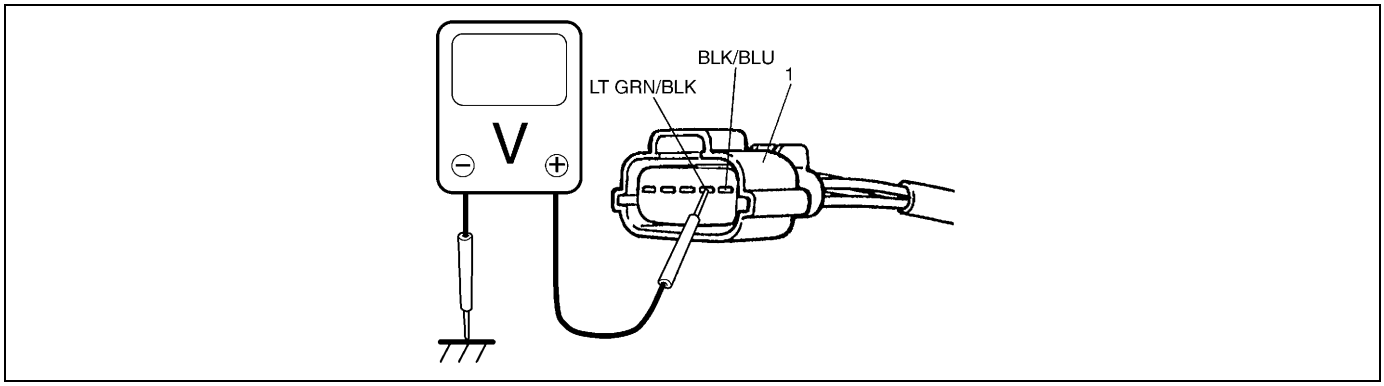

DTC P0113 Intake Air Temperature Sensor Circuit High

Wiring Diagram

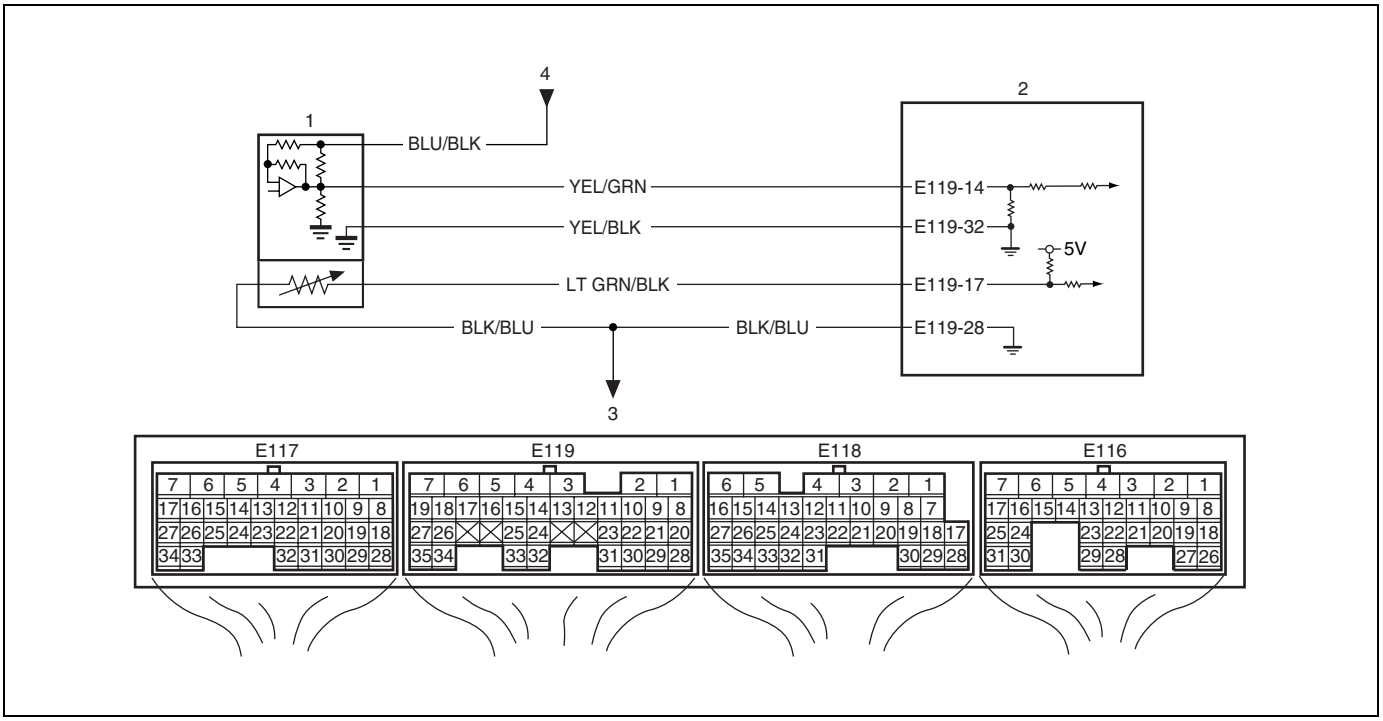

1. MAF and IAT sensor	3. To other sensors
2. ECM	4. From main relay

DTC Detecting Condition and Trouble Area

DTC detecting condition	Trouble area
DTC will be set when all of the following conditions are detected for 0.5 seconds continuously. • Engine is running • Voltage of IAT sensor output is more than the specified value (Low intake air temperature (high voltage / high resistance)) (1 driving cycle detection logic)	• IAT sensor circuit • IAT sensor • ECM

NOTE:

When DTC P0108, P0118 and P0123 are indicated together, it is possible that "BLK/BLU" wire circuit is open.

DTC Confirmation Procedure

1) With ignition switch turned OFF, connect scan tool.
2) Turn ON ignition switch and clear DTC using scan tool.
3) Start engine and run it for 10 sec.
4) Check DTC and pending DTC.

DTC Troubleshooting

Step	Action	Yes	No
1	Was “Engine and Emission Control System Check” performed?	Go to Step 2.	Go to “Engine and Emission Control System Check” in this section.
2	IAT sensor and its circuit check 1) Connect scan tool to DLC with ignition switch turned OFF. 2) Turn ON ignition switch. 3) Check intake air temp. displayed on scan tool. Is –40 °C (–40 °F) indicated?	Go to Step 3.	Intermittent trouble. Check for intermittent referring to “Intermittent and Poor Connection” in Section 0A.
3	IAT sensor voltage check 1) Disconnect connector from MAF and IAT sensor with ignition switch turned OFF. 2) Check for proper connection to MAF and IAT sensor at “LT GRN/BLK” and “BLK/BLU” wire terminals. 3) If OK, then turn ON ignition switch, measure voltage between “LT GRN/BLK” wire terminal of IAT sensor connector (1) and vehicle body ground. See Fig. 1. Is voltage about 4 – 6 V?	Go to Step 7.	Go to Step 4.
4	ECM voltage check 1) Turn OFF ignition switch. 2) Check for proper connection of ECM connector at “E119-17” terminal. 3) If OK, then turn ON ignition switch, measure voltage between “E119-17” terminal of ECM connector and vehicle body ground. Is voltage about 4 – 6 V?	“LT GRN/BLK” wire open circuit. If wire and connection are OK, go to Step 5.	Go to Step 5.
5	Wire circuit check 1) Disconnect connectors from ECM with ignition switch turned OFF. 2) Turn ON ignition switch. 3) Measure voltage between “LT GRN/BLK” wire terminal of MAF and IAT sensor connector and vehicle body ground. Is voltage about 0 V?	Go to Step 6.	“LT GRN/BLK” wire shorted to other circuits. If wire are OK, substitute a known-good ECM and recheck.
6	Wire circuit check 1) Measure resistance between “E119-17” terminal of ECM connector and “LT GRN/BLK” wire terminal of MAF and IAT sensor connector with ignition switch turned OFF. Is resistance below 5 Ω?	Go to Step 7.	“LT GRN/BLK” wire in high resistance circuit.

Step	Action	Yes	No
7	Ground circuit check 1) Connect connectors to ECM. 2) Check for proper connection of MAF and IAT sensor connector at “BLK/BLU” wire terminal. 3) Measure resistance between “BLK/BLU” wire terminal of MAF and IAT sensor connector and body ground with ignition switch turned OFF. Is resistance below 5 Ω?	Go to Step 9.	Go to Step 8.
8	Ground circuit check 1) Measure resistance between “E119-28” terminal of ECM connector and body ground. Is resistance below 5 Ω?	“BLK/BLU” wire open circuit or high resistance circuit. Poor “E119-28” connection.	Faulty ECM ground circuit. If circuit are OK, substitute a known-good ECM and recheck.
9	IAT sensor for performance check 1) Check IAT sensor according to “Mass Air Flow (MAF) and Intake Air Temperature (IAT) Sensor (Engine Equipped with VVT System)” in Section 6E. Is it in good condition?	Substitute a known-good ECM and recheck.	Replace MAF and IAT sensor.

NOTE:

Upon completion of inspection and repair work, perform “DTC Confirmation Procedure” and confirm that the trouble has been corrected.

Fig. 1 for Step 3

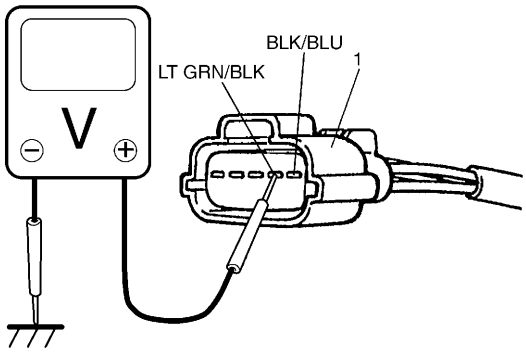

DTC P0116 Engine Coolant Temperature Circuit Range / Performance

Wiring Diagram

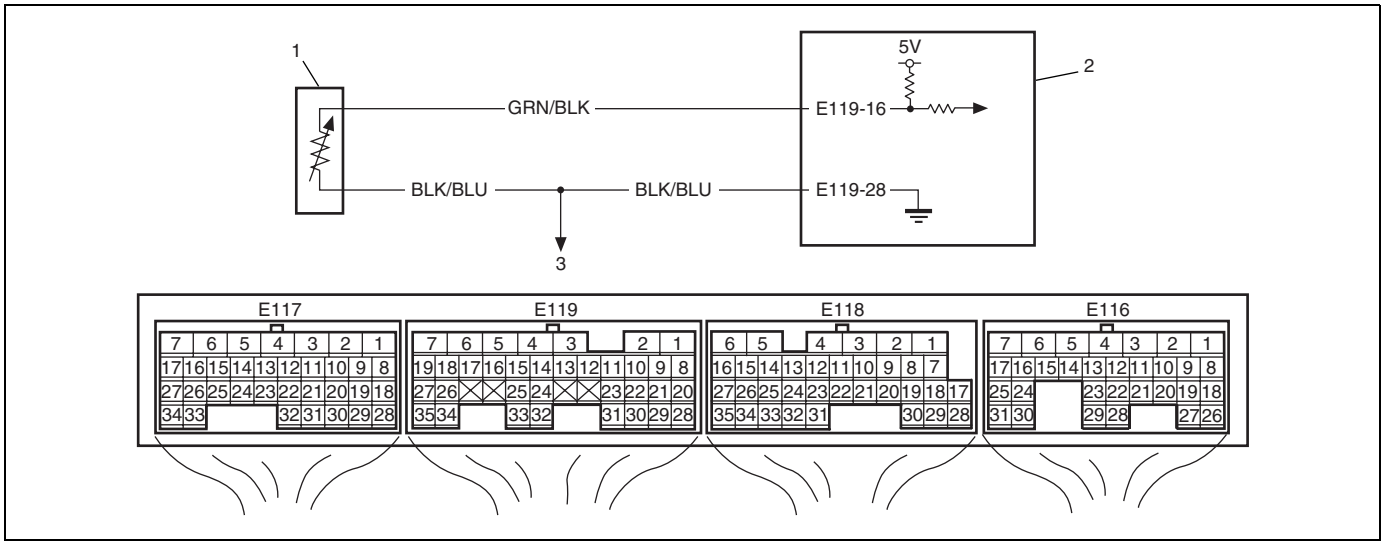

1. ECT sensor
2. ECM
3. To other sensors

DTC Detecting Condition and Trouble Area

DTC detecting condition	Trouble area
ECT sensor values is less than 20 °C (68 °F) while engine is running more than specified engine load (more than 1000 rpm) for 2 to 1112 min (depending on ECT at engine start) continuously from engine start. (2 driving cycle detecting logic)	• ECT sensor • ECT sensor circuit • Thermostat • ECM

DTC Confirmation Procedure

WARNING:

- **When performing a road test, select a place where there is no traffic or possibility of a traffic accident and very careful during testing to avoid occurrence of an accident.**
- **Road test should be carried out with 2 persons, a driver and tester, on a level road.**

NOTE:

Check to make sure that the following conditions are satisfied when using this "DTC Confirmation Procedure".

- **Intake air temperature at engine start: –10 °C (14 °F) to 80 °C (176 °F)**
- **Intake air temperature: –10 °C (14 °F) to 70 °C (158 °F)**
- **Altitude (barometric pressure): 2400 m, 8000 ft or less (560 mmHg, 75 kPa or more)**

1) With ignition switch turned OFF, connect scan tool.
2) Turn ON ignition switch, clear DTC.
3) Start engine.
4) Drive vehicle at 40 mph (60 km/h) or higher for 20 min. or more.
5) Stop vehicle.
6) Check DTC and pending DTC.

DTC Troubleshooting

Step	Action	Yes	No
1	Was “Engine and Emission Control System Check” performed?	Go to Step 2.	Go to “Engine and Emission Control System Check” in this section.
2	DTC check 1) Connect scan tool with ignition switch turned OFF. 2) Turn ON ignition switch and check DTC displayed on scan tool. Is DTC P0118 indicated?	Go to “DTC P0118 Engine Coolant Temperature Circuit High” in this section.	Go to Step 3.
3	Engine coolant temp. check 1) With ignition switch turned OFF, install scan tool to DLC. 2) Turn ON ignition switch and check engine coolant temp. displayed on scan tool. 3) Warm up engine to normal operating temp. and check engine coolant temp. displayed on scan tool. Does engine coolant temp. vary higher than 1 °C (1 °F) and rise higher than 70 °C (158 °F)?	Intermittent trouble. Check for intermittent referring to “Intermittent and Poor Connection” in Section 0A.	Go to Step 4.
4	Thermostat check Is there a symptom due to thermostat remaining open (it takes a long time before vehicle heater becomes effective or before engine is warmed to normal operating temp., etc.)?	Check thermostat referring to “Thermostat” in Section 6B.	Go to Step 5.
5	Wire harness check 1) Disconnect ECT sensor connector with ignition switch turned OFF. 2) Check for proper connection to ECT sensor connector at “BLK/BLU” and “GRN/BLK” wire terminals. See Fig. 1. 3) If OK, then with ignition switch ON. Is voltage applied to “GRN/BLK” wire terminal about 4 – 6 V?	Go to Step 9.	Go to Step 6.
6	ECM voltage check 1) Turn OFF ignition switch. 2) Check for proper connection of ECM connector at “E119-16” terminal. 3) If OK, then turn ON ignition switch, measure voltage between “E119-16” terminal of ECM connector and body ground. Is voltage about 4 – 6 V?	Open wire in “GRN/BLK” circuit. If wire and connection are OK, go to Step 7.	Go to Step 7.

Step	Action	Yes	No
7	Wire circuit check 1) Disconnect connectors from ECM with ignition switch turned OFF. 2) Turn ignition switch to ON position. 3) Measure voltage between “GRN/BLK” wire terminal of ECT sensor connector and body ground. Is voltage about 0 V?	Go to Step 8.	“GRN/BLK” wire shorted to other circuits. If wire are OK, substitute a known-good ECM and recheck.
8	Wire circuit check 1) Measure resistance between “E119-16” terminal of ECM connector and “GRN/BLK” wire terminal of ECT sensor connector with ignition switch turned OFF. Is resistance below 5 Ω?	Go to Step 9.	High resistance wire in “GRN/BLK” circuit.
9	Ground circuit check 1) Connect connectors to ECM. 2) Check for proper connection of ECT sensor connector at “BLK/BLU” wire terminal. 3) Measure resistance between “BLK/BLU” wire terminal of ECT sensor connector and body ground. Is resistance below 5 Ω?	Go to Step 11.	Go to Step 10.
10	Ground circuit check 1) Measure resistance between “E119-28” terminal of ECM connector and body ground. Is resistance below 5 Ω?	High resistance wire in “BLK/BLU” circuit. Poor “E119-28” connection.	Faulty ECM ground circuit. If circuit are OK, substitute a known-good ECM and recheck.
11	ECT sensor check 1) Check ECT sensor according to “Engine Coolant Temperature Sensor (ECT Sensor)” in Section 6B. Is it in good condition?	Substitute a known-good ECM and recheck.	Replace ECT sensor.

NOTE:

Upon completion of inspection and repair work, perform “DTC Confirmation Procedure” and confirm that the trouble has been corrected.

Fig. 1 for Step 4

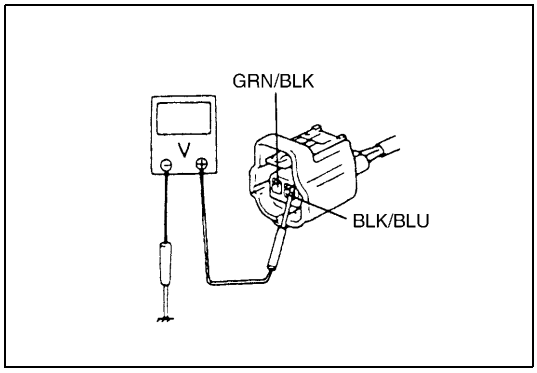

DTC P0117 Engine Coolant Temperature Circuit Low

Wiring Diagram

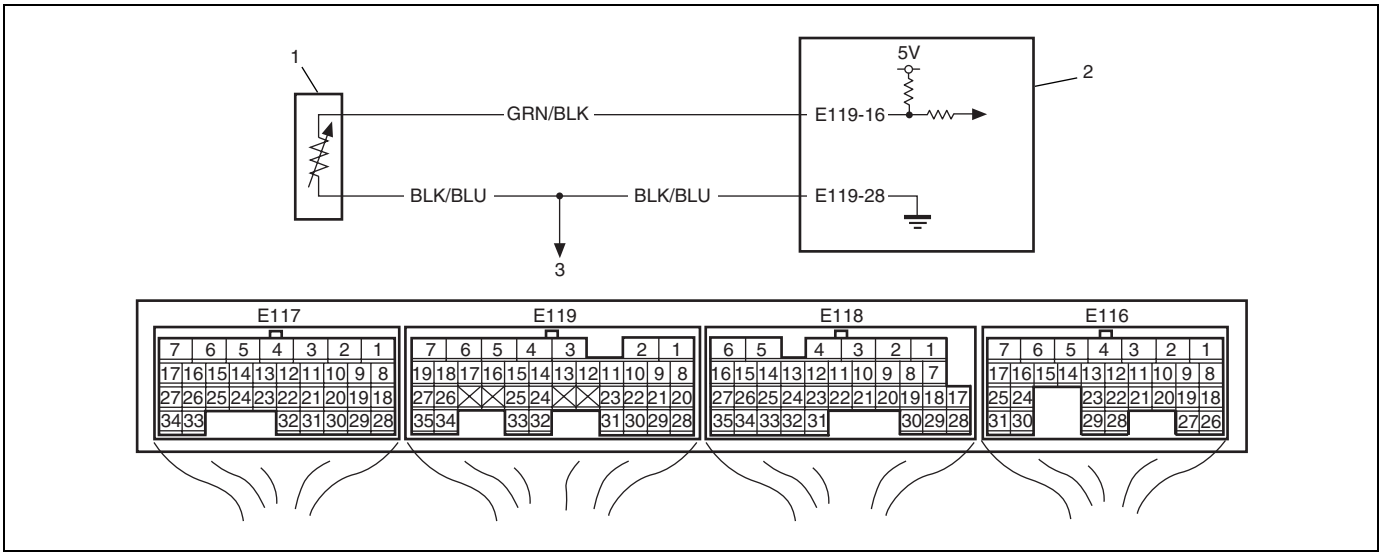

1. ECT sensor
2. ECM
3. To other sensors

DTC Detecting Condition and Trouble Area

DTC detecting condition	Trouble area
DTC will be set when all of the following conditions are detected for 0.5 seconds continuously. • Engine is running • Voltage of ECT sensor output is less than the specified value (High engine coolant temperature (low voltage / low resistance)) (1 driving cycle detection logic)	• ECT sensor circuit • ECT sensor • ECM

DTC Confirmation Procedure

1) With ignition switch turned OFF, connect scan tool.
2) Turn ON ignition switch and clear DTC using scan tool.
3) Start engine and run it for 10 sec. or more.
4) Check DTC and pending DTC.

DTC Troubleshooting

Step	Action	Yes	No
1	Was “Engine and Emission Control System Check” performed?	Go to Step 2.	Go to “Engine and Emission Control System Check” in this section.
2	ECT sensor and its circuit check 1) Connect scan tool with ignition switch turned OFF. 2) Turn ignition switch ON. 3) Check engine coolant temp. displayed on scan tool. Is 119 °C (246 °F) indicated?	Go to Step 3.	Intermittent trouble. Check for intermittent referring to “Intermittent and Poor Connection” in Section 0A.

Step	Action	Yes	No
3	ECM voltage check 1) Disconnect connector from ECT sensor with ignition switch turned OFF. 2) Check for proper connection to ECT sensor at “GRN/BLK” and “BLK/BLU” wire terminals. 3) If OK, then turn ON ignition switch, measure voltage between “GRN/BLK” wire terminal of ECT sensor connector and vehicle body ground. See Fig. 1. Is voltage about 4 – 6 V?	Go to Step 6.	Go to Step 4.
4	ECT sensor circuit insulation check 1) Disconnect connectors from ECM with ignition switch turned OFF. 2) Measure resistance between “GRN/BLK” wire terminal of ECT sensor connector and body ground. Is resistance infinity?	Go to Step 5.	“GRN/BLK” wire shorted to ground circuit. If wire are OK, substitute a known-good ECM and recheck.
5	ECT sensor short circuit check 1) Turn ON ignition switch. 2) Measure voltage between “GRN/BLK” wire terminal of ECT sensor connector and vehicle body ground. Is voltage about 0 V?	Go to Step 6.	“GRN/BLK” wire shorted to other circuits. If wire are OK, substitute a known-good ECM and recheck.
6	ECT sensor for performance check 1) Check ECT sensor according to “Engine Coolant Temperature Sensor (ECT Sensor)” in Section 6B. Is it in good condition?	Substitute a known-good ECM and recheck.	Replace ECT sensor.

NOTE:

Upon completion of inspection and repair work, perform “DTC Confirmation Procedure” and confirm that the trouble has been corrected.

Fig. 1 for Step 3

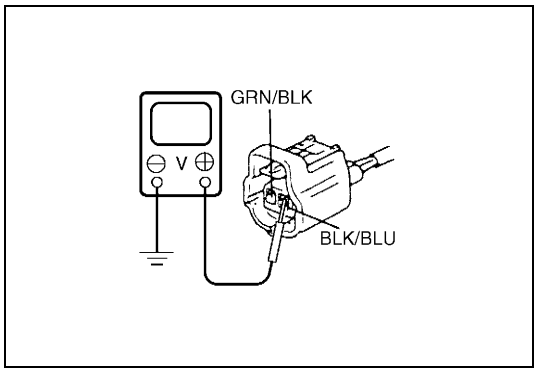

DTC P0118 Engine Coolant Temperature Circuit High

Wiring Diagram

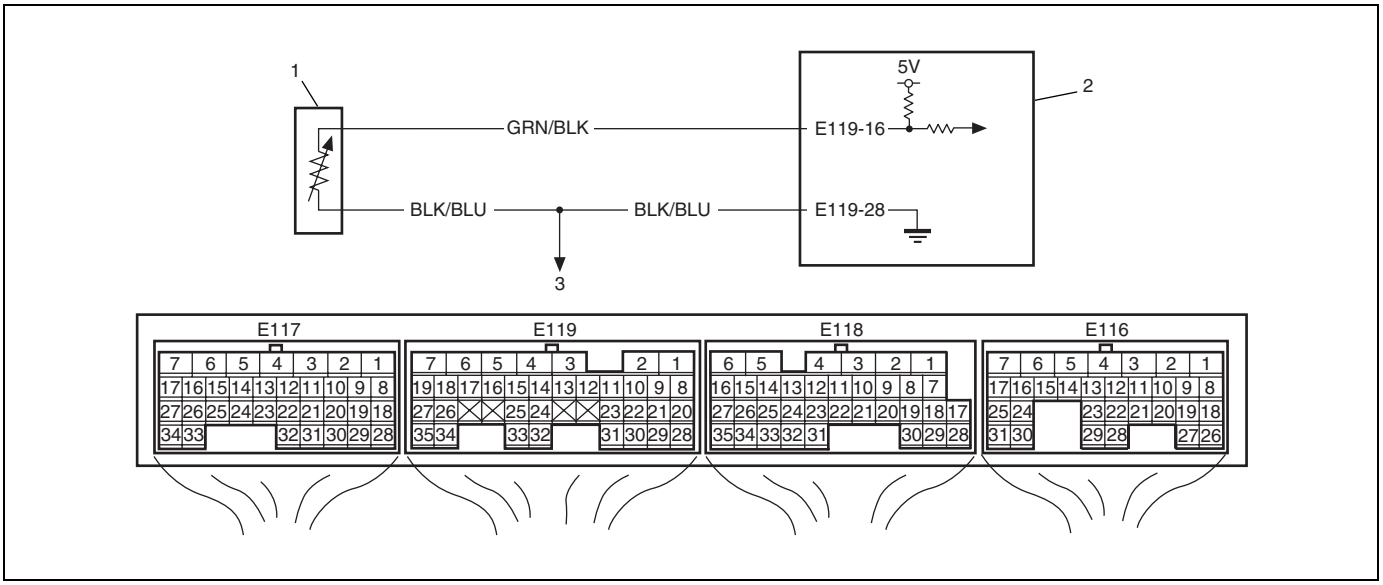

1. ECT sensor
2. ECM
3. To other sensors

DTC Detecting Condition and Trouble Area

DTC detecting condition	Trouble area
DTC will be set when all of the following conditions are detected for 0.5 seconds continuously. • Engine is running • Voltage of ECT sensor output is more than the specified value (Low engine coolant temperature (high voltage / high resistance)) (1 driving cycle detection logic)	• ECT sensor circuit • ECT sensor • ECM

NOTE:

When DTC P0108, P0113 and P0123 are indicated together, it is possible that "BLK/BLU" wire circuit is open.

DTC Confirmation Procedure

1) With ignition switch turned OFF, connect scan tool.
2) Turn ON ignition switch and clear DTC using scan tool.
3) Start engine and run it for 10 sec. or more.
4) Check DTC and pending DTC.

DTC Troubleshooting

Step	Action	Yes	No
1	Was “Engine and Emission Control System Check” performed?	Go to Step 2.	Go to “Engine and Emission Control System Check” in this section.
2	ECT sensor and its circuit check 1) Connect scan tool with ignition switch turned OFF. 2) Turn ignition switch ON. 3) Check engine coolant temp. displayed on scan tool. Is –40 °C (–40 °F) indicated?	Go to Step 3.	Intermittent trouble. Check for intermittent referring to “Intermittent and Poor Connection” in Section 0A.
3	ECT voltage check 1) Disconnect connector from ECT sensor with ignition switch turned OFF. 2) Check for proper connection to ECT sensor at “GRN/BLK” and “BLK/BLU” wire terminals. 3) If OK, then turn ON ignition switch, measure voltage between “GRN/BLK” wire terminal of ECT sensor connector and vehicle body ground. Is voltage about 4 – 6 V?	Go to Step 6.	Go to Step 4.
4	ECM voltage check 1) Turn OFF ignition switch. 2) Check for proper connection of ECM connector at “E119-16” terminals. 3) If OK, then turn ON ignition switch, measure voltage between “E119-16” wire terminal of ECM connector and vehicle body ground. Is voltage about 4 – 6 V?	“GRN/BLK” wire open circuit. If wire and connection are OK, go to Step 5.	Go to Step 5.
5	ECT sensor harness voltage check 1) Disconnect connectors from ECM with ignition switch turned OFF. 2) Turn ON ignition switch. 3) Measure voltage between “GRN/BLK” wire terminal of ECT sensor connector and vehicle body ground. Is voltage about 0 V?	Go to Step 6.	“GRN/BLK” wire shorted to other circuits. If wire are OK, substitute a known-good ECM and recheck.
6	ECT sensor harness resistance check 1) Measure resistance between “E119-16” terminal of ECM connector and “GRN/BLK” wire terminal of ECT sensor connector with ignition switch turn OFF. Is resistance below 5 Ω?	Go to Step 7.	“GRN/BLK” wire in high resistance circuit.

Step	Action	Yes	No
7	ECT sensor ground circuit check 1) Connect connectors to ECM. 2) Check for proper connection of ECT sensor connector at “BLK/BLU” wire terminal. 3) Measure resistance between “BLK/BLU” wire terminal of ECT sensor connector and vehicle body ground. Is resistance below 5 Ω?	Go to Step 9.	Go to Step 8.
8	ECT sensor ground circuit check 1) Measure resistance between “E119-28” terminal of ECM connector and vehicle body ground. Is resistance below 5 Ω?	“BLK/BLU” wire open circuit or high resistance circuit. Poor “E119-28” connection.	Faulty ECM ground circuit. If circuit are OK, substitute a known-good ECM and recheck.
9	ECT sensor for performance check 1) Check ECT sensor according to “Engine Coolant Temperature Sensor (ECT Sensor)” in Section 6B. Is it in good condition?	Substitute a known-good ECM and recheck.	Replace ECT sensor.

NOTE:

Upon completion of inspection and repair work, perform “DTC Confirmation Procedure” and confirm that the trouble has been corrected.

Fig. 1 for Step 3

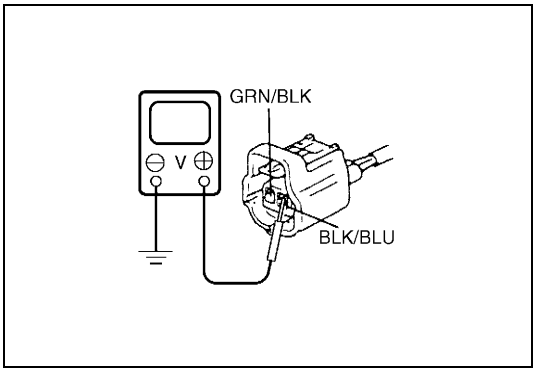

DTC P0121 Throttle Position Sensor Circuit Range / Performance

Wiring Diagram

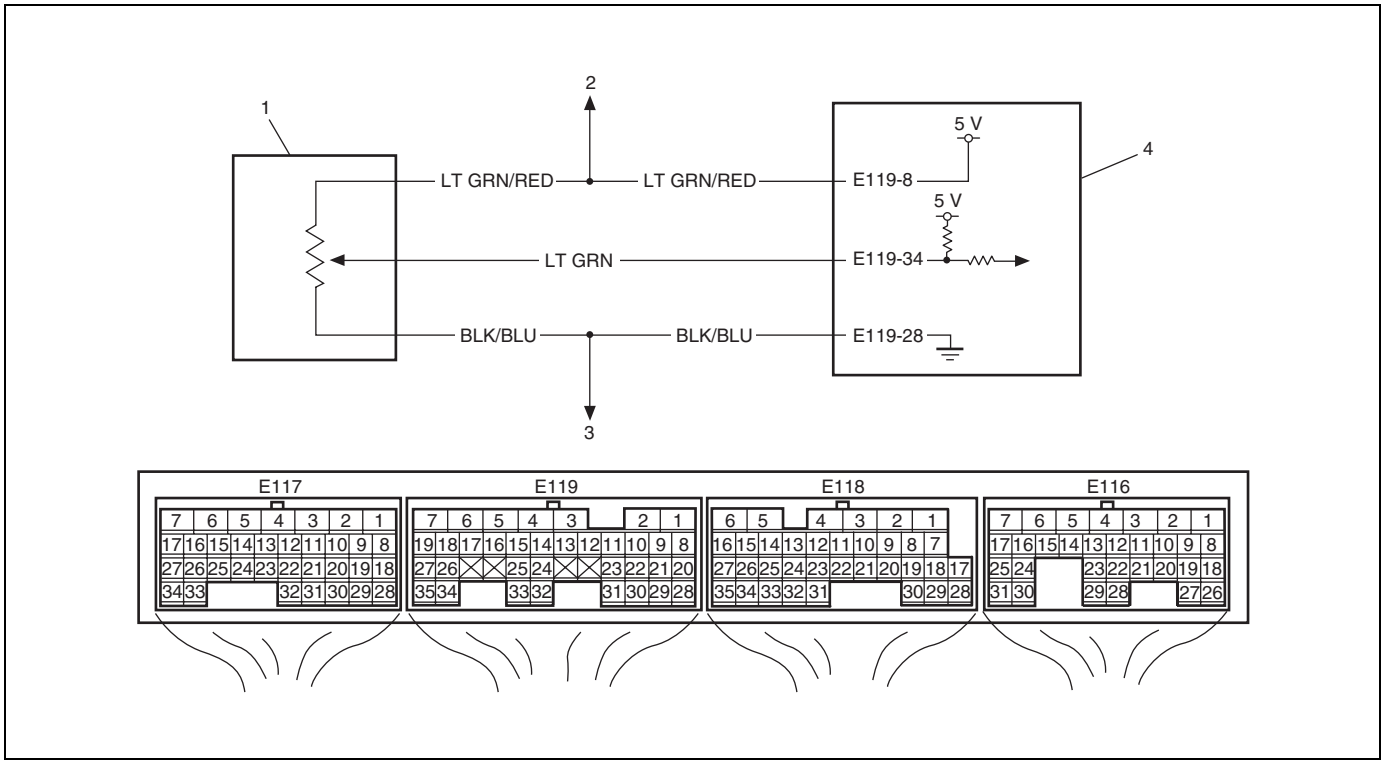

1. TP sensor	3. To other sensors
2. To MAP sensor	4. ECM

DTC Detecting Condition and Trouble Area

DTC detecting condition	Trouble area
Difference between actual throttle opening (detected from TP sensor) and opening calculated by ECM (obtained on the basis of engine speed and mass air flow) is out of specified range (–20 degree to 20 degree). (2 driving cycle detection logic)	• Throttle body • TP sensor • TP sensor circuit • ECM • MAF sensor • Idle air control valve • Air intake system

DTC Confirmation Procedure

WARNING:

- **When performing a road test, select a place where there is no traffic or possibility of a traffic accident and be very careful during testing to avoid occurrence of an accident.**
- **Road test should be carried out with 2 persons, a driver and a tester, on a level road.**

NOTE:

Check to make sure that the following conditions are satisfied when using this "DTC Confirmation Procedure".

- **Intake air temperature at engine start: –10 °C (14 °C) to 80 °C (176 °F)**
- **Intake air temperature: –10 °C (14 °C) to 70 °C (158 °F)**
- **Engine coolant temperature: 70 °C (158 °F) to 150 °C (302 °F)**
- **Altitude (barometric pressure): 2400 m, 8000 ft or less (560 mmHg, 75 kPa or more)**

1) With ignition switch turned OFF, connect scan tool.
2) Turn ON ignition switch and clear DTC using scan tool.
3) Start engine and warm up to normal operating temperature.
4) Drive vehicle at 60 km/h (38 mile/h) at 5th gear or D range.
5) Increase vehicle speed to 65 km/h (40 mile/h) at 5th gear D range.
6) Release accelerator pedal to decrease vehicle speed till 60 km/h (38 mile/h).
7) Repeat Step 4) to 6) for 3 times.
8) Stop vehicle and check DTC and pending DTC.

DTC Troubleshooting

Step	Action	Yes	No
1	Was “Engine and Emission Control System Check” performed?	Go to Step 2.	Go to “Engine and Emission Control System Check” in this section.
2	TP sensor and its circuit check 1) Turn OFF ignition switch and connect SUZUKI scan tool to DLC. 2) Turn ON ignition switch and check TP sensor output voltage when throttle valve is at idle position and fully opened. Does voltage vary within specified value linearly? See Graph 1.	Go to Step 14.	Go to Step 3.
3	TP sensor voltage check 1) Disconnect connector from TP sensor with ignition switch turned OFF. 2) Check for proper connection to TP sensor connector at “LT GRN/RED”, “LT GRN” and “BLK/BLU” wire terminals. 3) If OK, then with ignition switch turned ON, check for the following terminal voltages. • Between “LT GRN/RED” wire terminal of TP sensor connector and body ground • Between “LT GRN” wire terminal of TP sensor connector and body ground Is each terminal voltage about 4 – 6 V? See Fig. 1.	Go to Step 11.	Go to Step 4.
4	Was “LT GRN/RED” wire terminal voltage in Step 3 within specification?	Go to Step 7.	Go to Step 5.
5	Wire harness check 1) Turn ignition switch to OFF position. 2) Disconnect connector from MAP sensor. 3) Turn ignition switch to ON position. 4) Measure voltage between “LT GRN/RED” wire terminal of TP sensor connector and body ground. Is terminal voltage about 4 – 6 V?	Faulty MAP sensor, check MAP sensor according to “Manifold Absolute Pressure Sensor (MAP Sensor)” in Section 6E.	Go to Step 6.

Step	Action	Yes	No
6	ECM voltage check 1) Turn ignition switch to OFF position. 2) Check for proper connection of ECM connector at "E119-8" terminal. 3) Turn ignition switch to ON position. 4) Measure voltage between "E119-8" terminal of ECM connector and body ground. Is terminal voltage about 4 – 6 V?	"LT GRN/RED" wire in open or high resistance circuit.	Go to Step 8.
7	ECM voltage check 1) Turn ignition switch to OFF position. 2) Check for proper connection of ECM connector at "E119-34" terminal. 3) Turn ignition switch to ON position. 4) Measure voltage between "E119-34" terminal of ECM connector and body ground. Is terminal voltage about 4 – 6 V?	"LT GRN" wire in open or high resistance circuit.	Go to Step 8.
8	Wire circuit check 1) Disconnect connectors from ECM with ignition switch turned OFF. 2) Measure resistance between "LT GRN/RED" wire terminal of ECM connector and body ground, between "LT GRN" wire terminal of ECM connector. Is resistance infinity?	Go to Step 9.	"LT GRN/RED" and/or "LT GRN" wire shorted to ground circuit. If wire are OK, substitute a known-good ECM and recheck.
9	Wire circuit check 1) Turn ON ignition switch. 2) Measure voltage between "LT GRN/RED" wire terminal of ECM connector and body ground and between "LT GRN" wire terminal of ECM connector and body ground. Is voltage about 0 V at each terminal?	Go to Step 10.	"LT GRN/RED" and/or "LT GRN" wire shorted to other circuit. If wire are OK, substitute a known-good ECM and recheck.
10	Wire circuit check 1) Measure resistance between "E119-8" terminal of ECM connector and "LT GRN/RED" wire terminal of TP sensor connector and between "E119-34" terminal of ECM connector and "LT GRN" wire terminal of TP sensor connector with ignition switch turned OFF. Is each resistance below 5 Ω?	Go to Step 11.	"LT GRN" and/or "LT GRN/RED" wire in high resistance circuit.
11	Ground circuit check 1) Connect connectors to ECM. 2) Measure resistance between "BLK/BLU" wire terminal of TP sensor connector and body ground with ignition switch turned OFF. Is resistance below 5 Ω?	Go to Step 13.	Go to Step 12.

Step	Action	Yes	No
12	Ground circuit check 1) Measure resistance between “E119-28” terminal of ECM connector and body ground. Is resistance below 5 Ω?	“BLK/BLU” wire open circuit or high resistance circuit. Poor “E119-28” connection.	Faulty ECM ground circuit. If circuit are OK, substitute a known-good ECM and recheck.
13	TP sensor check 1) Measure resistance between terminals of TP sensor referring to “Throttle Position Sensor (TP Sensor)” in Section 6E. Are measured values within specifications?	Go to Step 14.	Replace TP sensor.
14	MAF sensor for performance check 1) Check MAF sensor performance, referring to “DTC P0101 Mass Air Flow Circuit Range / Performance” in this section. Is it in good condition?	Go to Step 15.	Repair or replace it.
15	Is DTC P0505 detected?	Go to “DTC P0505 Idle Air Control System” in this section.	Go to Step 16.
16	Idle air control (IAC) valve check 1) Check idle air control valve referring to “Idle Air Control (IAC Valve)” in Section 6E. Is it in good condition?	Go to Step 17.	Repair or replace idle air control valve.
17	Throttle body check 1) Check throttle body for clog or leak. Is it OK?	Substitute a known-good ECM and recheck.	Repair throttle body.

NOTE:

Upon completion of inspection and repair work, perform “DTC Confirmation Procedure” and confirm that the trouble has been corrected.

[A] Graph 1 for Step 2 / [B] Fig. 1 for Step 3

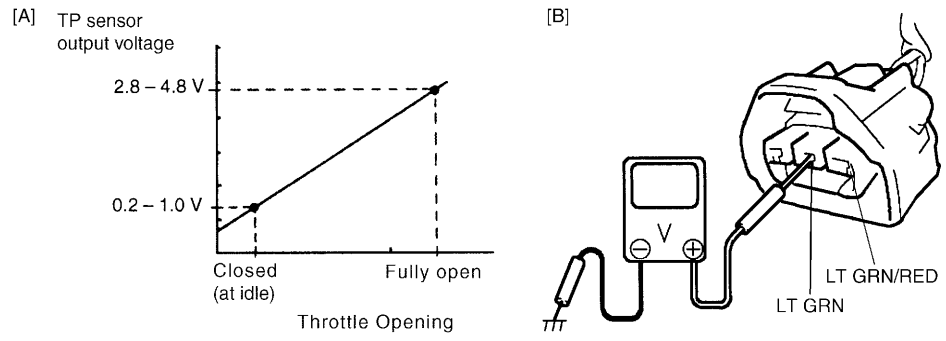

DTC P0122 Throttle Position Sensor Circuit Low

Wiring Diagram

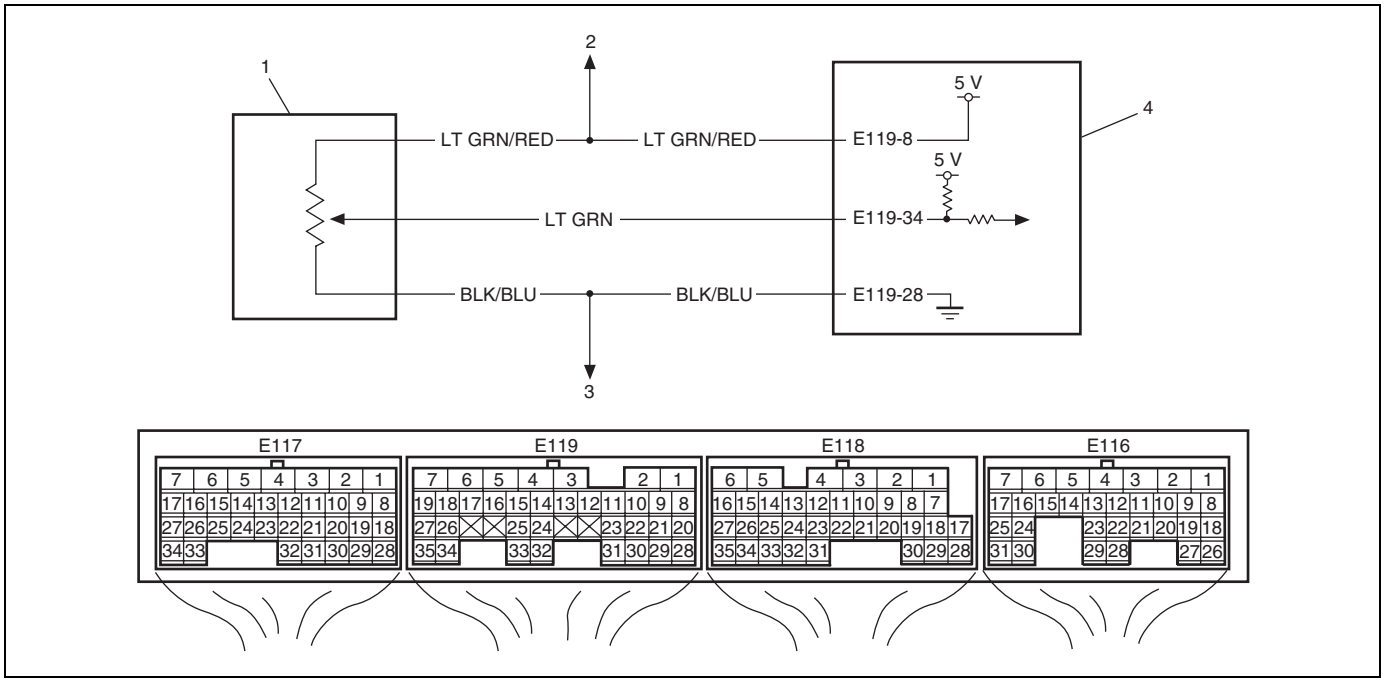

1. TP sensor	3. To other sensors
2. To MAP sensor	4. ECM

DTC Detecting Condition and Trouble Area

DTC detecting condition	Trouble area
Voltage of TP sensor output is less than the specified value for 0.5 seconds continuously. (1 driving cycle detection logic)	• TP sensor circuit • TP sensor • MAP sensor • ECM

DTC Confirmation Procedure

1) With ignition switch turned OFF, connect scan tool.
2) Turn ON ignition switch and clear DTC using scan tool.
3) Start engine and run it for 10 sec. or more.
4) Check DTC and pending DTC.

DTC Troubleshooting

Step	Action	Yes	No
1	Was “Engine and Emission Control System Check” performed?	Go to Step 2.	Go to “Engine and Emission Control System Check” in this section.

Step	Action	Yes	No
2	TP sensor and its circuit check 1) Connect scan tool to DLC with ignition switch turned OFF and then turn ON ignition switch. 2) Check throttle valve opening percentage displayed on scan tool. 3) Check throttle valve opening percentage displayed on scan tool while opening throttle valve from idle position to full open position. Is it displayed 0%?	Go to Step 3.	Intermittent trouble. Check for intermittent referring to “Intermittent and Poor Connection” in Section 0A.
3	Wire harness check 1) Disconnect connector from TP sensor with ignition switch turned OFF. 2) Check for proper connection to TP sensor at “LT GRN/RED”, “LT GRN” and “BLK/BLU” wire terminals. 3) If OK, then with ignition switch turned ON, check for the following terminal voltages. • Between “LT GRN/RED” wire terminal of TP sensor connector and body ground • Between “LT GRN” wire terminal of TP sensor connector and body ground Is each terminal voltage about 4 – 6 V? See Fig. 1.	Go to Step 6.	Go to Step 4.
4	Wire harness check 1) Turn ignition switch to OFF position. 2) Disconnect connector from MAP sensor. 3) Turn ignition switch to ON position. 4) Measure voltage between “LT GRN/RED” wire terminal of TP sensor connector and body ground. Is terminal voltage about 4 – 6 V?	Faulty MAP sensor, check MAP sensor according to “Manifold Absolute Pressure Sensor (MAP Sensor)” in Section 6E.	Go to Step 5.
5	ECM voltage check 1) Turn ignition switch to OFF position. 2) Check for proper connection of ECM connector at “E119-8” terminal. 3) Turn ignition switch to ON position. 4) Measure voltage between “E119-8” terminal of ECM connector and body ground. Is terminal voltage about 4 – 6 V?	“LT GRN/RED” wire in open or high resistance circuit.	Go to Step 6.

Step	Action	Yes	No
6	Wire circuit check 1) Disconnect connectors from ECM with ignition switch turn OFF. 2) Measure resistance between “LT GRN/RED” wire terminal of TP sensor connector and body ground, between “LT GRN” wire terminal of TP sensor connector and body ground and between “LT GRN” and “BLK/BLU” wire terminals of TP sensor connector. Is resistance infinity?	Go to Step 7.	“LT GRN/RED” and/or “LT GRN” wire shorted to ground circuit and / or “LT GRN” wire shorted to “BLK/BLU” wire. If wires are OK, substitute a known-good ECM and recheck.
7	TP sensor check 1) Measure resistance between terminals of TP sensor referring to “Throttle Position Sensor (TP Sensor)” in Section 6E. Are measured values within specifications?	Substitute a known-good ECM and recheck.	Replace TP sensor.

NOTE:

Upon completion of inspection and repair work, perform “DTC Confirmation Procedure” and confirm that the trouble has been corrected.

Fig. 1 for Step 3

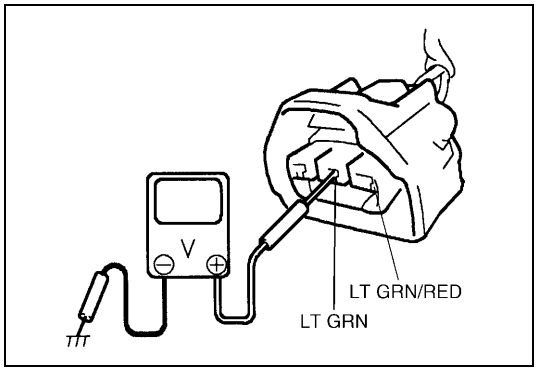

DTC P0123 Throttle Position Sensor Circuit High

Wiring Diagram

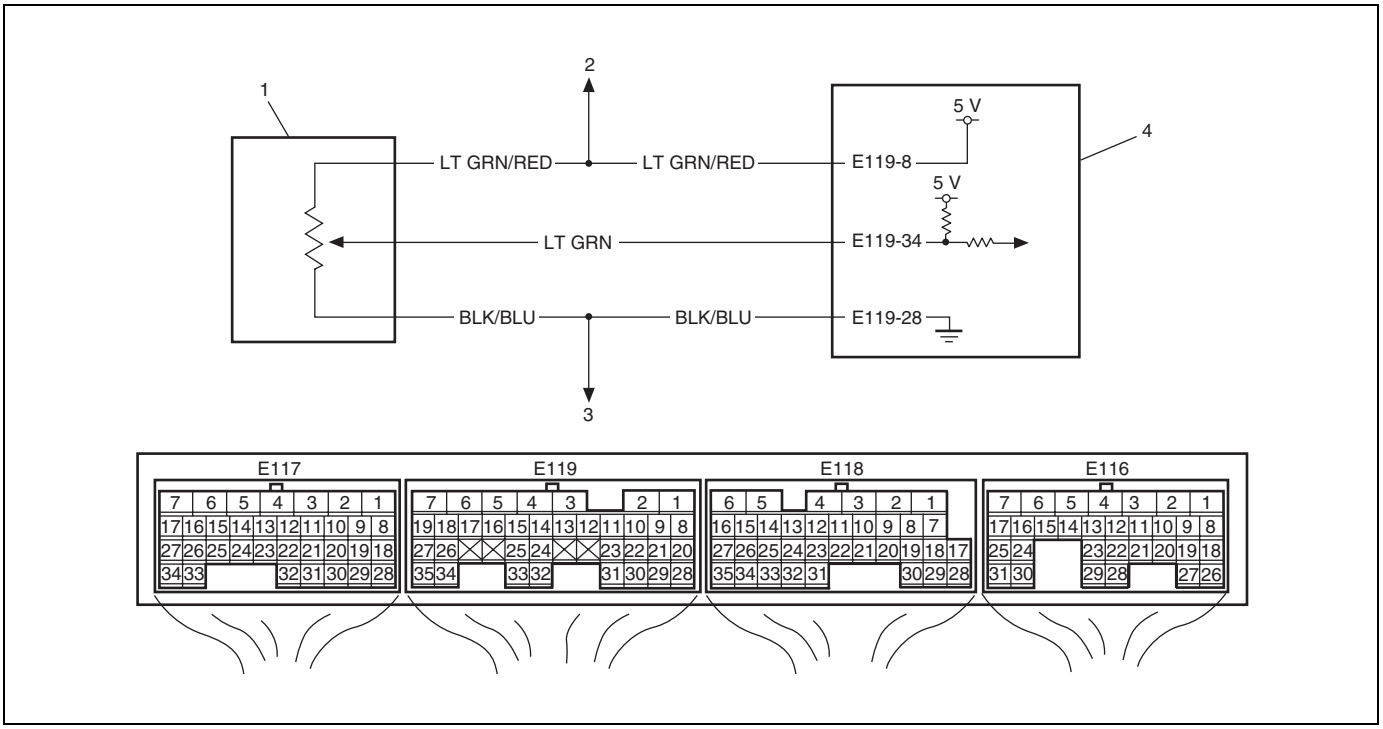

1. TP sensor	3. To other sensors
2. To MAP sensor	4. ECM

DTC Detecting Condition and Trouble Area

DTC detecting condition	Trouble area
Voltage of TP sensor output is more than the specified value for 0.5 seconds continuously. (1 driving cycle detection logic)	• TP sensor circuit • TP sensor • MAP sensor • ECM

NOTE:

When DTC P0108, P0113 and P0118 are indicated together, it is possible that "BLK/BLU" wire circuit is open.

DTC Confirmation Procedure

1) With ignition switch turned OFF, connect scan tool.
2) Turn ON ignition switch and clear DTC using scan tool.
3) Start engine and run it for 10 sec. or more.
4) Check DTC and pending DTC.

DTC Troubleshooting

Step	Action	Yes	No
1	Was "Engine and Emission Control System Check" performed?	Go to Step 2.	Go to "Engine and Emission Control System Check" in this section.

Step	Action	Yes	No
2	TP sensor and its circuit check 1) Connect scan tool to DLC with ignition switch turned OFF and then turn ignition switch ON. 2) Check throttle valve opening percentage displayed on scan tool. 3) Check throttle valve opening percentage displayed on scan tool while opening throttle valve from idle position to full open position. Is it displayed 100%?	Go to Step 3.	Intermittent trouble. Check for intermittent referring to “Intermittent and Poor Connection” in Section 0A.
3	Wire harness check 1) Disconnect connector from TP sensor with ignition switch turned OFF. 2) Check for proper connection to TP sensor at “LT GRN/RED”, “LT GRN” and “BLK/BLU” wire terminals. 3) If OK, then with ignition switch turned ON, check for the following terminal voltages. • Between “LT GRN/RED” wire terminal of TP sensor connector and body ground • Between “LT GRN” wire terminal of TP sensor connector and body ground Is each terminal voltage about 4 – 6 V?	Go to Step 8.	Go to Step 4.
4	Was “LT GRN/RED” wire terminal voltage in Step 3 within specification?	Go to Step 6.	Go to Step 5.
5	Wire circuit check 1) Turn ignition switch to OFF position. 2) Disconnect connectors from ECM. 3) Check for proper connection of ECM connector at “E119-8” terminal. 4) Turn ignition switch to ON position. 5) Measure voltage between “LT GRN/RED” wire terminal of TP sensor connector and body ground. Is terminal voltage about 0 V?	Substitute a known-good ECM and recheck.	“LT GRN/RED” wire shorted to power circuit.
6	Wire circuit check 1) Disconnect connector from ECM with ignition switch turned OFF. 2) Turn ON ignition switch. 3) Check for proper connection of ECM connector at “E119-34” terminal. 4) Measure voltage between “LT GRN” wire terminal of TP sensor connector and body ground. Is voltage about 0 V at terminal?	Go to Step 7.	“LT GRN” wire shorted to power circuit. If wire is OK, substitute a known-good ECM and recheck.

Step	Action	Yes	No
7	Wire circuit check 1) Measure resistance between “E119-34” wire terminal of ECM connector and “LT GRN” wire terminal of TP sensor connector with ignition switch turned OFF. Is resistance below 5 Ω?	Go to Step 8.	“LT GRN” wire open or high resistance circuit.
8	Ground circuit check 1) Connect connector to ECM. 2) Measure resistance between “BLK/BLU” wire terminal of TP sensor connector and body ground with ignition switch turned OFF. Is resistance below 5 Ω?	Go to Step 10.	Go to Step 9.
9	Ground circuit check 1) Measure resistance between “E119-28” terminal of ECM connector and body ground. Is resistance below 5 Ω?	“BLK/BLU” wire open circuit or high resistance circuit. Poor “E119-28” connection.	Faulty ECM ground circuit. If circuit are OK, substitute a known-good ECM and recheck.
10	TP sensor check 1) Measure resistance between terminals of TP sensor referring to “Throttle Position Sensor (TP Sensor)” in Section 6E. Are measured values within specifications?	Substitute a known-good ECM and recheck.	Replace TP sensor.

NOTE:

Upon completion of inspection and repair work, perform “DTC Confirmation Procedure” and confirm that the trouble has been corrected.

Fig. 1 for Step 3

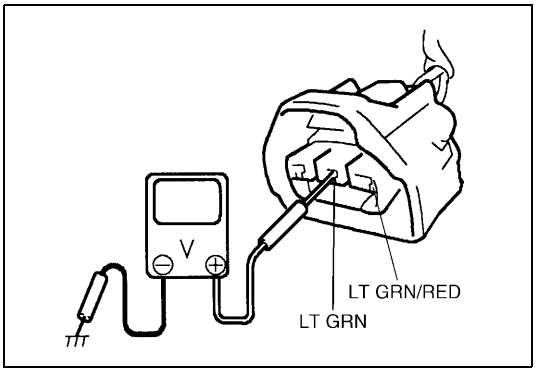

DTC P0131 / P0132 O2 Sensor (HO2S) Circuit Low Voltage / High Voltage (Sensor-1)

Wiring Diagram

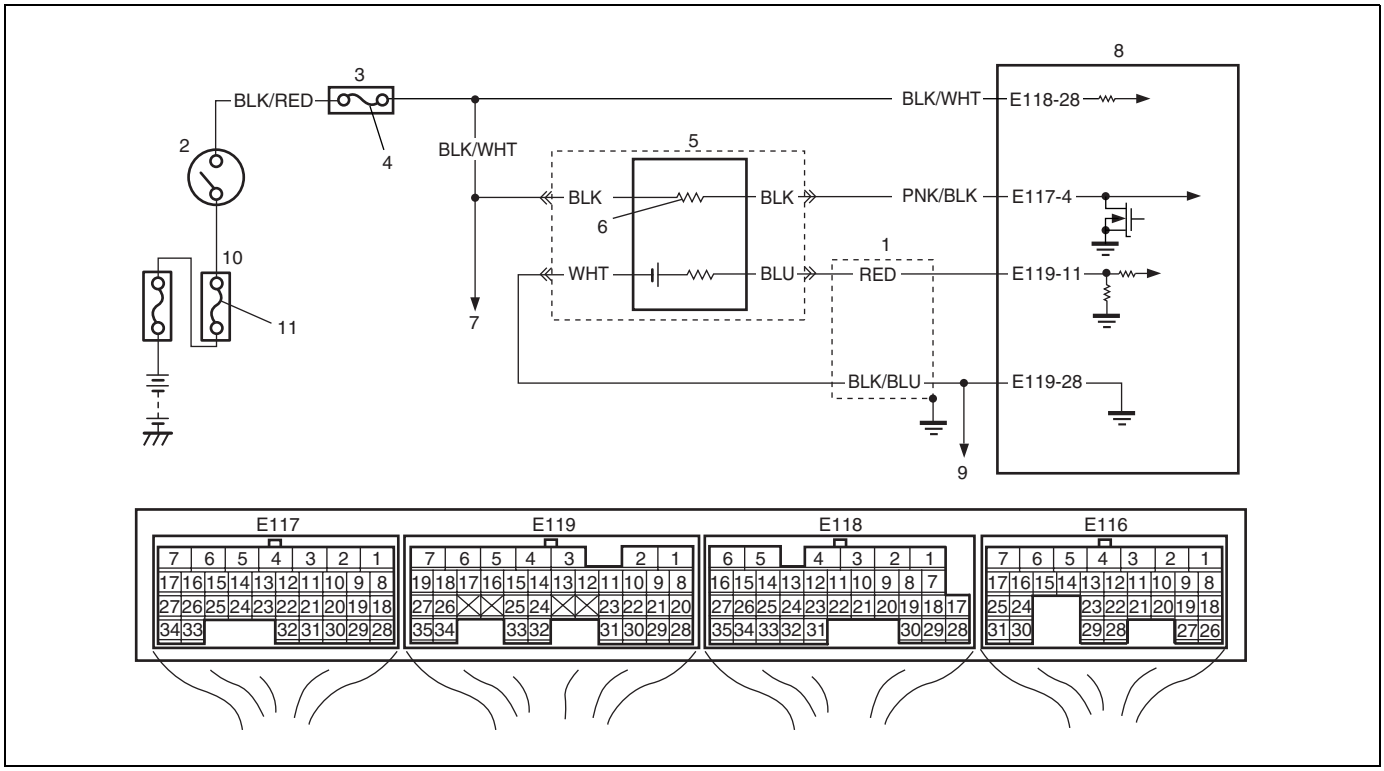

1. Shield wire	4. "IG" fuse	7. To HO2S-2 heater	10. Relay box
2. Ignition switch	5. HO2S-1	8. ECM	11. "IGN1" fuse
3. Circuit fuse box	6. Heater	9. To other sensor	

DTC Detecting Condition and Trouble Area

DTC detecting condition	Trouble area
DTC P0131: Maximum HO2S voltage is less than 0.6 V (2 driving cycle detection logic) DTC P0132: Minimum HO2S voltage is 0.3 V or more (*2 driving cycle detection logic, monitoring once / 1 driving)	• HO2S-1 circuit • HO2S-1 • Fuel system • ECM • Fuel shortage • Exhaust system • Air intake system

DTC Confirmation Procedure

WARNING:

- **When performing a road test, select a place where there is no traffic or possibility of a traffic accident and be very careful during testing to avoid occurrence of an accident.**
- **Road test should be carried out with 2 persons, a driver and a tester, on a level road.**

NOTE:

Check to make sure that the following conditions are satisfied when using this "DTC Confirmation Procedure".

- **Intake air temperature at engine start: –10 °C (14 °F) to 80 °C (176 °F)**
- **Intake air temperature: –10 °C (14 °F) to 70 °C (158 °F)**
- **Engine coolant temperature: 70 °C (158 °F) to 150 °C (302 °F)**
- **Altitude (barometric pressure): 2400 m, 8000 ft or less (560 mmHg, 72 kPa or more)**

1) With ignition switch turned OFF, connect scan tool.
2) Turn ON ignition switch and clear DTC using scan tool.
3) Start engine and warm up to normal operating temperature.
4) Drive vehicle at 40 mph (60 km/h) or higher. (engine speed: 2500 – 3000 r/min.)
5) Keep above vehicle speed for 6 min. or more. (Throttle valve opening is kept constant in this step.)
6) Release accelerator pedal and with engine brake applied, keep vehicle coasting (with fuel cut for 3 sec. or more) and then stop vehicle.
7) Check DTC and pending DTC.

DTC Troubleshooting

Step	Action	Yes	No
1	Was "Engine and Emission Control System Check" performed?	Go to Step 2.	Go to "Engine and Emission Control System Check" in this section.
2	Is there DTC(s) other than HO2S-1?	Go to applicable DTC diag. flow.	Go to Step 3.
3	HO2S-1 signal check 1) Connect scan tool to DLC with ignition switch turned OFF. 2) Warm up engine to normal operating temperature and keep it at 2000 r/min. for 60 sec. 3) Repeat racing engine (Repeat depressing accelerator pedal 5 to 6 times continuously and take foot off from pedal to enrich and enlean A/F mixture). Does HO2S-1 output voltage deflect between below 0.3 V and over 0.6 V repeatedly?	Intermittent trouble. Check for intermittent referring to "Intermittent and Poor Connection" in Section 0A. If they are OK, go to Step 9.	Go to Step 4.

Step	Action	Yes	No
4	HO2S-1 ground check 1) Disconnect connector from HO2S-1 with ignition switch turned OFF. 2) Check for proper connection to HO2S-1 connector at “PNK/BLK”, “RED”, “BLK/WHT” and “BLK/BLU” wire terminals. 3) If connections are OK, measure resistance between “BLK/BLU” wire terminal of HO2S-1 connector and engine ground. Is resistance less than 5 Ω?	Go to Step 5.	“BLK/BLU” wire open or high resistance circuit. Poor “E119-28” terminal connection. Faulty ECM ground. If they are OK, substitute a known-good ECM and recheck.
5	Wire circuit check 1) Turn OFF ignition switch. 2) Measure resistance between “RED” wire terminal of HO2S-1 connector and “E119-11” wire terminal of ECM connector. Is resistance less than 5 Ω?	Go to Step 6.	“RED” wire high resistance circuit or open circuit. Poor “E119-11” terminal connection. Faulty ECM ground. If they are OK, substitute a known-good ECM and recheck.
6	Wire circuit check 1) Disconnect connectors from ECM with ignition switch turn OFF. 2) Measure resistance between “RED” wire terminal of HO2S-1 connector and body ground. Is resistance infinity?	Go to Step 7.	“RED” wire shorted to ground circuit.
7	HO2S-1 signal circuit check 1) Measure voltage between “RED” wire terminal of HO2S-1 connector and vehicle body ground. Is voltage 0 V?	Go to Step 8.	“RED” wire shorted to other circuits.
8	HO2S-1 heater circuit check 1) Check HO2S-1 heater circuit referring to “DTC P0031 / P0032 HO2S Heater Control Circuit Low / High (Sensor-1)” in this section. Is circuit in good condition?	Go to Step 9.	Repair or replace it.
9	Exhaust system check 1) Check exhaust system for exhaust gas leakage. Is it OK?	Go to Step 4 in “DTC P0171 / P0172 Fuel System Too Lean / Rich” in this section. If it is in good condition, go to Step 10.	Repair exhaust system for leakage.
10	Air intake system check 1) Check air intake system for clog or leak. Is it OK?	Check HO2S-1 referring to “Heated Oxygen Sensor (Sensor-1 and Sensor-2)” in Section 6E. If it is in good condition, substitute a known-good ECM and recheck.	Repair or replace.

NOTE:

Upon completion of inspection and repair work, perform "DTC Confirmation Procedure" and confirm that the trouble has been corrected.

DTC P0133 O2 Sensor (HO2S) Circuit Slow Response (Sensor-1)

Wiring Diagram

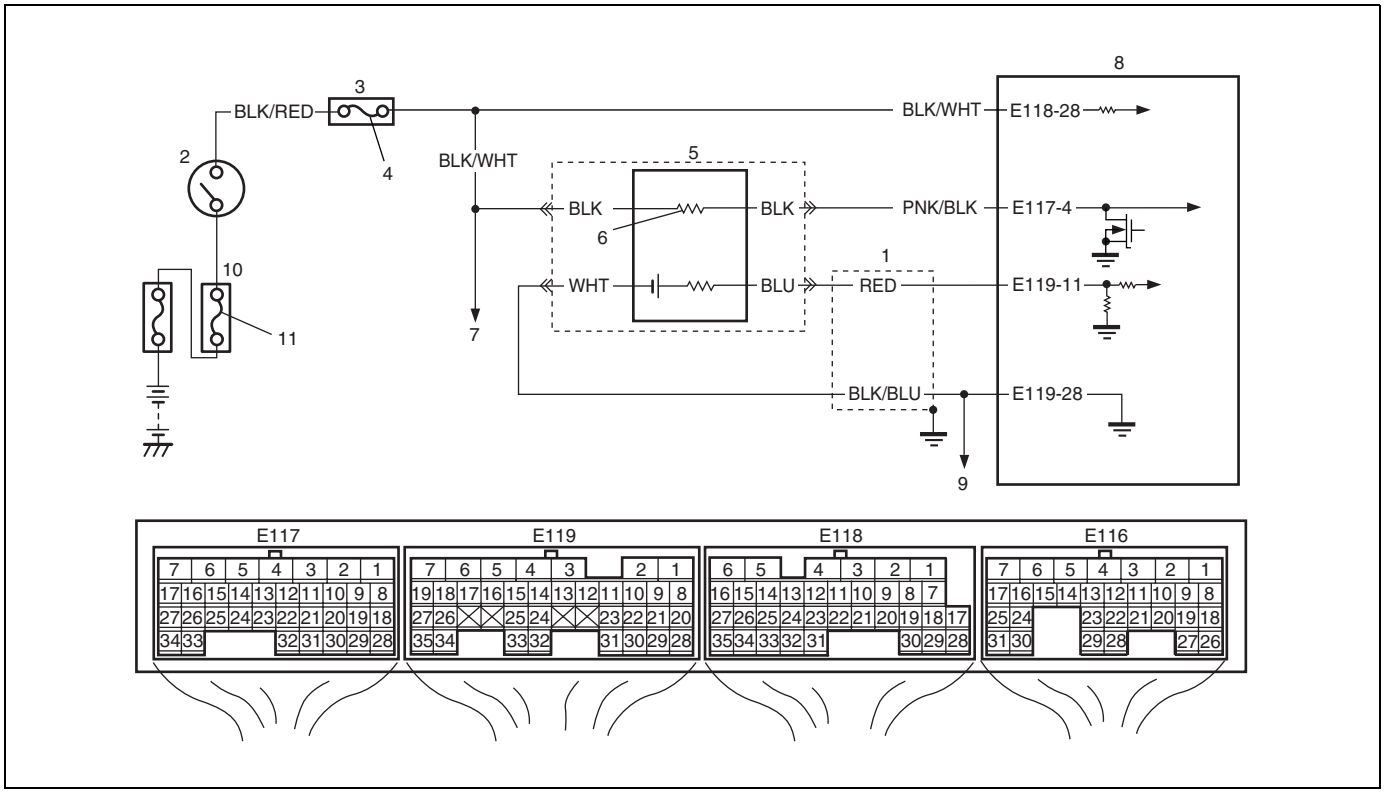

1. Shield wire	4. "IG" fuse	7. To HO2S-2 heater	10. Relay box
2. Ignition switch	5. HO2S-1	8. ECM	11. "IGN1" fuse
3. Circuit fuse box	6. Heater	9. To other sensor	

DTC Detecting Condition and Trouble Area

DTC detecting condition	Trouble area
Response time (time to change from lean to rich or from rich to lean) of HO2S-1 output voltage is about 1 sec. at minimum or average time of 1 cycle is 5 sec. at minimum. (*2 driving cycle detection logic, monitoring once / 1 driving)	Heated oxygen sensor-1

DTC Confirmation Procedure

WARNING:

- **When performing a road test, select a place where there is no traffic or possibility of a traffic accident and be very careful during testing to avoid occurrence of an accident.**
- **Road test should be carried out with 2 persons, a driver and a tester, on a level road.**

NOTE:

Check to make sure that the following conditions are satisfied when using this "DTC Confirmation Procedure".

- **Intake air temperature at engine start: –10 °C (14 °F) to 80 °C (176 °F)**
- **Intake air temperature: –10 °C (14 °F) to 70 °C (158 °F)**
- **Engine coolant temperature: 70 °C (158 °F) to 150 °C (302 °F)**
- **Altitude (barometric pressure): 2400 m, 8000 ft or less (560 mmHg, 75 kPa or more)**

1) With ignition switch turned OFF, connect scan tool.
2) Turn ON ignition switch and clear DTC using scan tool.
3) Start engine and warm up to normal operating temperature.
4) Drive vehicle at 40 mph (60 km/h) or higher. (engine speed: 2500 – 3000 r/min.)
5) Keep above vehicle speed for 6 min. or more. (Throttle valve opening is kept constant in this step.)
6) Release accelerator pedal and with engine brake applied, keep vehicle coasting (with fuel cut for 3 sec. or more) and then stop vehicle.
7) Check if DTC and pending DTC exists by using scan tool. If not, check if oxygen sensor monitoring test has completed by using scan tool. If not in both of above checks (i.e., no DTC and pending DTC and oxygen sensor monitoring test not completed), check vehicle condition (environmental) and repeat Step 3) through 6).

DTC Troubleshooting

Step	Action	Yes	No
1	Was “Engine and Emission Control System Check” performed?	Go to Step 2.	Go to “Engine and Emission Control System Check” in this section.
2	Is there DTC(s) other than HO2S-1 (DTC P0133)?	Go to applicable DTC diag. flow.	Replace HO2S-1.

NOTE:

Upon completion of inspection and repair work, perform “DTC Confirmation Procedure” and confirm that the trouble has been corrected.

DTC P0134 O2 Sensor (HO2S) Circuit No Activity Detected (Sensor-1)

Wiring Diagram

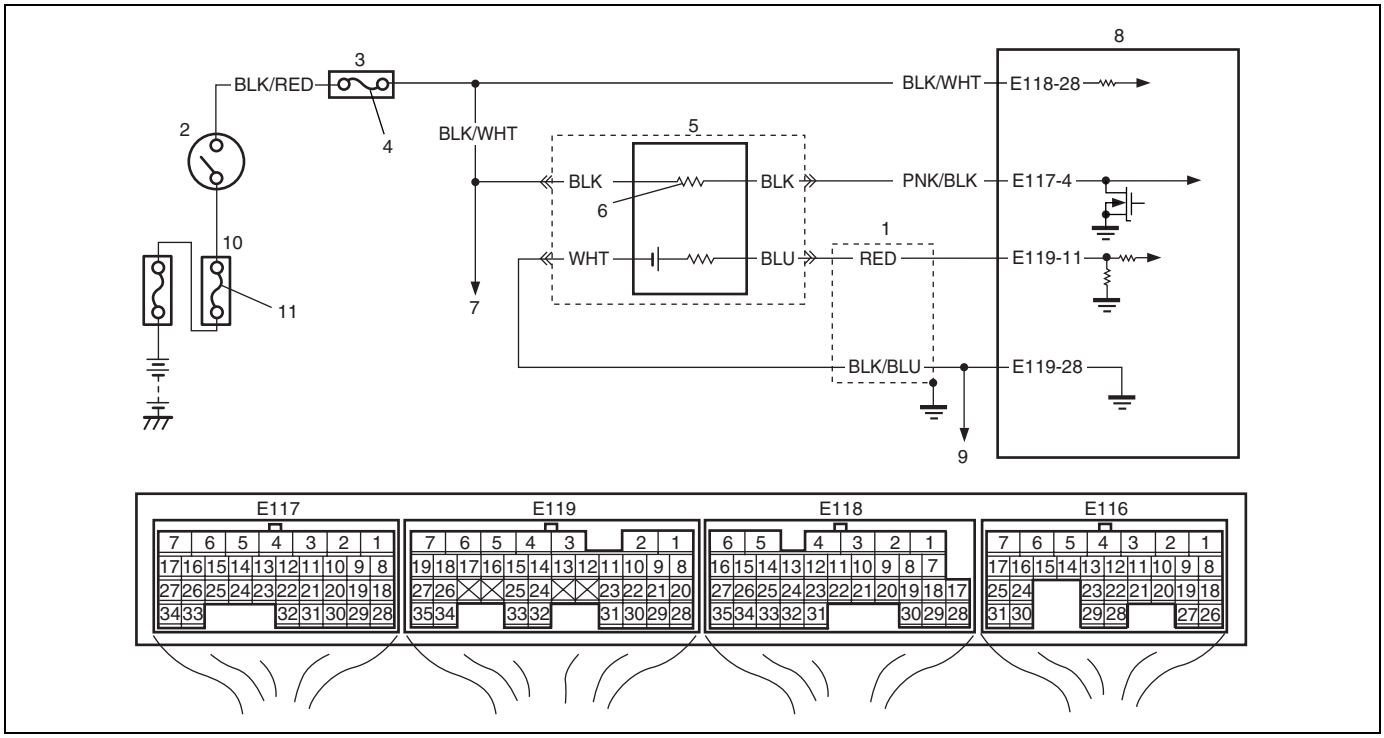

1. Shield wire	4. "IG" fuse	7. To HO2S-2 heater	10. Relay box
2. Ignition switch	5. HO2S-1	8. ECM	11. "IGN1" fuse
3. Circuit fuse box	6. Heater	9. To other sensor	

DTC Detecting Condition and Trouble Area

DTC detecting condition	Trouble area
HO2S voltage is higher than 0.6 V for more than 1 min continuously after warming up engine or HO2S voltage is lower than 0.3 V for more than 1 min continuously after warming up engine. (2 driving cycle detection logic)	• HO2S-1 • HO2S-1 circuit • Fuel system • Exhaust gas leakage • ECM • Fuel shortage • Air intake system

DTC Confirmation Procedure

WARNING:

- **When performing a road test, select a place where there is no traffic or possibility of a traffic accident and be very careful during testing to avoid occurrence of an accident.**
- **Road test should be carried out with 2 persons, a driver and a tester, on a level road.**

NOTE:

Check to make sure that the following conditions are satisfied when using this "DTC Confirmation Procedure".

- **Intake air temperature at engine start: –10 °C (14 °F) to 80 °C (176 °F)**
- **Intake air temperature: –10 °C (14 °F) to 70 °C (158 °F)**
- **Engine Coolant temperature: 70 °C (158 °F) to 150 °C (302 °F)**
- **Altitude (barometric pressure): 2400 m, 8000 ft or less (560 mmHg, 75 kPa or more)**

1) With ignition switch turned OFF, connect scan tool.
2) Turn ON ignition switch and clear DTC using scan tool.
3) Start engine and warm up to normal operating temperature.
4) Drive vehicle at 40 mph (60 km/h) or higher. (engine speed: 2500 – 3000 r/min.)
5) Keep above vehicle speed for 6 min. or more. (Throttle valve opening is kept constant in this step.)
6) Release accelerator pedal and with engine brake applied, keep vehicle coasting (with fuel cut for 3 sec. or more) and then stop vehicle.
7) Check if DTC and pending DTC exists by using scan tool. If not, check if oxygen sensor monitoring test has completed by using scan tool. If not in both of above checks (i.e., no DTC and pending DTC and oxygen sensor monitoring test not completed), check vehicle condition (environmental) and repeat Step 3) through 6).

DTC Troubleshooting

Step	Action	Yes	No
1	Was “Engine and Emission Control System Check” performed?	Go to Step 2.	Go to “Engine and Emission Control System Check” in this section.
2	HO2S-1 output voltage check 1) Connect scan tool to DLC with ignition switch turned OFF. 2) Warm up engine to normal operating temperature and keep it at 2000 r/min. for 60 sec. 3) Repeat racing engine (Repeat depressing accelerator pedal 5 to 6 times continuously to enrich A/F mixture and take foot off from pedal to enlean) and check HO2S output voltage displayed on scan tool. Is over 0.6 V and below 0.3 V indicated?	Intermittent trouble. Check for intermittent referring to “Intermittent and Poor Connection” in Section 0A. If OK, substitute a known-good ECM and recheck.	Go to Step 3.
3	HO2S-1 ground check 1) Disconnect connector from HO2S-1 with ignition switch turned OFF. 2) Check for proper connection to HO2S-1 at “PNK/BLK”, “RED”, “BLK/WHT” and “BLK/BLU” wire terminals. 3) If wire and connection are OK, measure resistance between “BLK/BLU” wire terminal of HO2S-1 connector and engine ground. Is resistance less than 5 Ω?	Go to Step 4.	“BLK/BLU” wire open or high resistance circuit. Poor “E119-28” terminal connection. Faulty ECM ground. If they are OK, substitute a known-good ECM and recheck.
4	Wire circuit check 1) Turn OFF ignition switch. 2) Measure resistance between “RED” wire terminal of HO2S-1 connector and “E119-11” terminal. Is resistance less than 5 Ω?	Go to Step 5.	“RED” wire in high resistance circuit or open circuit. Poor “E119-11” terminal connection. Faulty ECM ground. If they are OK, substitute a known-good ECM and recheck.

Step	Action	Yes	No
5	Wire circuit check 1) Disconnect connectors from ECM with ignition switch turned OFF. 2) Measure resistance between “RED” wire terminal of HO2S-1 connector and body ground. Is resistance infinity?	Go to Step 6.	“RED” wire shorted to ground circuit.
6	HO2S-1 heater circuit check 1) Check HO2S-1 heater circuit referring to “DTC P0031 / P0032 HO2S Heater Control Circuit Low / High (Sensor-1)” in this section. Is result in good condition?	Go to Step 7.	Repair or replace it.
7	Exhaust system check 1) Check exhaust system for exhaust gas leakage. Is it OK?	Go to Step 4 in “DTC P0171 / P0172 Fuel System Too Lean / Rich” in this section. If it is in good condition, go to Step 8.	Repair exhaust system for leakage.
8	Air intake system check 1) Check air intake system for clog or leak. Is it OK?	Check HO2S-1 referring to “Heated Oxygen Sensor (Sensor-1 and Sensor-2)” in Section 6E. If it is in good condition, substitute a known-good ECM and recheck.	Repair or replace.

NOTE:

Upon completion of inspection and repair work, perform “DTC Confirmation Procedure” and confirm that the trouble has been corrected.

DTC P0140 O2 Sensor (HO2S) Circuit No Activity Detected (Sensor-2)

Wiring Diagram

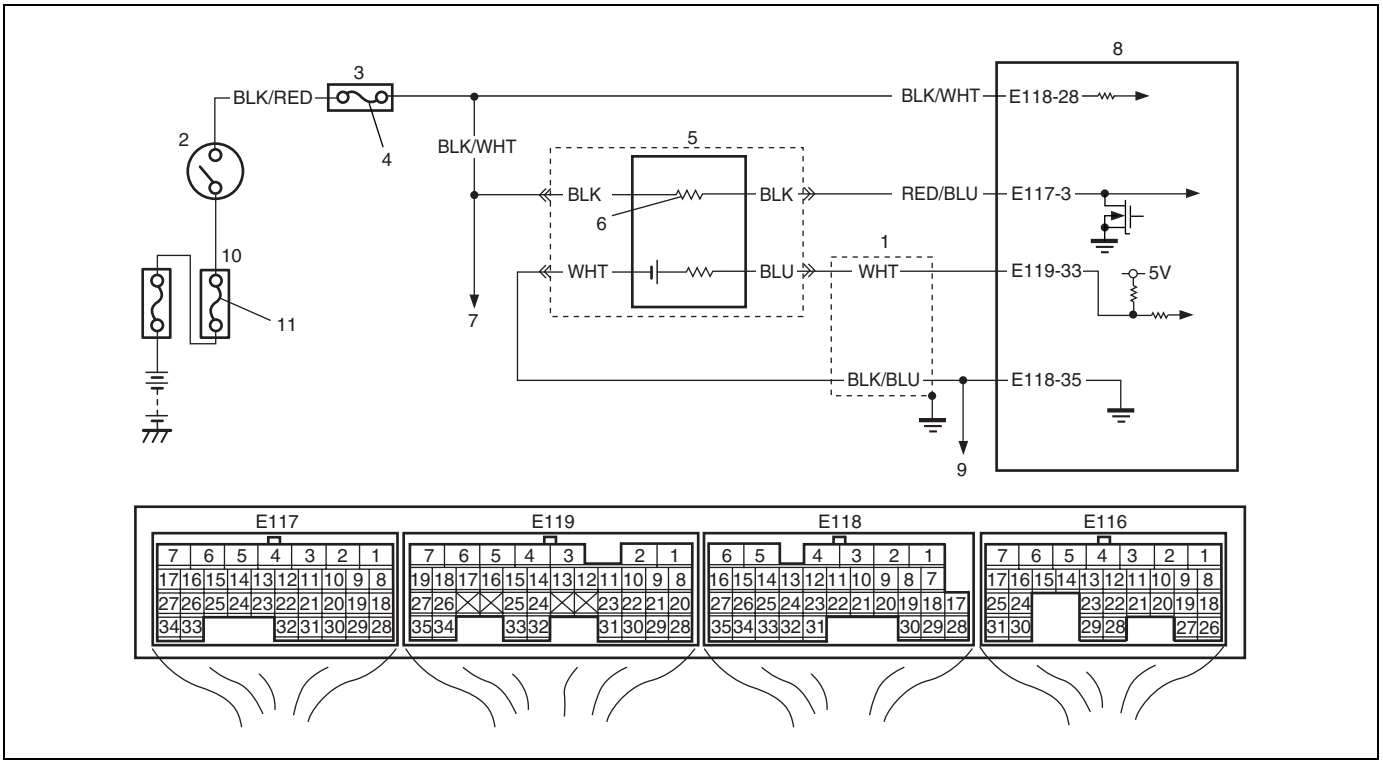

1. Shield wire	4. "IG" fuse	7. To HO2S-1 heater	10. Relay box
2. Ignition switch	5. HO2S-2	8. ECM	11. "IGN1" fuse
3. Circuit fuse box	6. Heater	9. To other sensor	

DTC Detecting Condition and Trouble Area

DTC detecting condition	Trouble area
HO2S-2 voltage is higher than specified value after warming up engine (circuit open). (2 driving cycle detection logic)	• HO2S-2 • HO2S-2 circuit • ECM • Exhaust gas leakage • Air intake system

DTC Confirmation Procedure

WARNING:

- **When performing a road test, select a place where there is no traffic or possibility of a traffic accident and be very careful during testing to avoid occurrence of an accident.**
- **Road test should be carried out with 2 persons, a driver and a tester, on a level road.**

1) With ignition switch turned OFF, connect scan tool.
2) Turn ON ignition switch and clear DTC using scan tool.
3) Start engine and warm up to normal operating temperature.
4) Increase vehicle speed to 60 – 80 km/h (37 – 50 mile/h) at 5th gear or D range.
5) Release accelerator pedal and with engine brake applied, keep vehicle coasting (with fuel cut for 4 sec. or more), then stop vehicle and run engine at idle speed for 60 sec. or more.
6) Check DTC and pending DTC.

DTC Troubleshooting

Step	Action	Yes	No
1	Was “Engine and Emission Control System Check” performed?	Go to Step 2.	Go to “Engine and Emission Control System Check” in this section.
2	HO2S-2 ground check 1) Disconnect connector from HO2S-2 with ignition switch turned OFF. 2) Check for proper connection to HO2S-2 connector at “RED/BLU”, “WHT”, “BLK/BLU” and “BLK/WHT” wire terminals. 3) If wire and connection are OK, measure resistance between “BLK/BLU” wire terminal of HO2S-2 connector and engine ground. Is resistance less than 5 Ω?	Go to Step 3.	“BLK/BLU” wire open or high resistance circuit. Poor “E118-35” terminal connection. Faulty ECM ground. If they are OK, substitute a known-good ECM and recheck.
3	Wire circuit check 1) Turn OFF ignition switch. 2) Measure resistance between “WHT” wire terminal of HO2S-2 connector and “E119-33” terminal of ECM connector. Is resistance less than 5 Ω?	Go to Step 4.	“WHT” wire high resistance circuit or open circuit. Poor “E119-33” terminal connection. If they are OK, substitute a known-good ECM and recheck.
4	HO2S-2 signal circuit check 1) Disconnect connectors from ECM with ignition switch turned OFF. 2) Measure voltage between “WHT” wire terminal of HO2S-2 sensor connector and vehicle body ground. Is voltage 0 V?	Go to Step 5.	“WHT” wire shorted to other circuits.
5	HO2S-2 heater circuit check 1) Check HO2S-2 heater circuit referring to “DTC P0037 / P0038 HO2S Heater Control Circuit Low / High (Sensor-2)” in this section. Is circuit in good condition?	Go to Step 6.	Repair or replace it. If circuit is OK, substitute a known-good ECM and recheck.
6	HO2S-2 check 1) Check HO2S-2 referring to “Heated Oxygen Sensor (Sensor-1 and Sensor-2)” in Section 6E. Is it in good condition?	Substitute a known-good ECM and recheck.	Repair or replace.

NOTE:

Upon completion of inspection and repair work, perform “DTC Confirmation Procedure” and confirm that the trouble has been corrected.

DTC P0171 / P0172 Fuel System Too Lean / Rich

DTC Detecting Condition and Trouble Area

DTC detecting condition	Trouble area
DTC P0171: Total fuel trim is higher than 35% or short term fuel trim is higher than 20% for more than 1 min. continuously. (2 driving cycle detection logic) DTC P0172: Total fuel trim is lower than –35% or short term fuel trim is lower than –20% for more than 1 min. continuously. (2 driving cycle detection logic)	• Vacuum leaks • Exhaust gas leakage • Fuel pressure out of specification • Fuel injector malfunction • Heated oxygen sensor-1 malfunction • MAF sensor malfunction • ECT sensor malfunction

DTC Confirmation Procedure

WARNING:

- **When performing a road test, select a place where there is no traffic or possibility of a traffic accident and be very careful during testing to avoid occurrence of an accident.**
- **Road test should be carried out with 2 persons, a driver and a tester, on a level road.**

NOTE:

Check to make sure that the following conditions are satisfied when using this "DTC Confirmation Procedure".

- **Intake air temperature at engine start: –10 °C (14 °F) to 80 °C (176 °F)**
- **Intake air temperature: –10 °C (14 °F) to 70 °C (158 °F)**
- **Engine coolant temperature: 70 °C (158 °F) to 150 °C (302 °F)**
- **Altitude (barometric pressure): 2400 m, 8000 ft or less (560 mmHg, 75 kPa or more)**

1) With ignition switch turned OFF, connect scan tool.
2) Turn ON ignition switch and clear DTC using scan tool.
3) Start engine and warm up to normal operating temperature.
4) Operate vehicle within freeze frame data condition as noted for 5 min.
5) Stop vehicle and check DTC and pending DTC.

DTC Troubleshooting

Step	Action	Yes	No
1	Was “Engine and Emission Control System Check” performed?	Go to Step 2.	Go to “Engine and Emission Control System Check” in this section.
2	Is there DTC(s) other than fuel system (DTC P0171 / P0172)?	Go to applicable DTC diag. flow.	Go to Step 3.
3	Intake system and exhaust system for leakage check Are intake system and exhaust system in good condition?	Go to Step 4.	Repair or replace.
4	Fuel pressure check 1) Check fuel pressure referring to “Fuel Pressure Inspection” in Section 6E. Is check result satisfactory?	Go to Step 5.	Repair or replace.
5	Fuel injectors and its circuit check 1) Check fuel injectors referring to “Fuel Injector” in Section 6E. Is check result satisfactory?	Go to Step 6.	Faulty injector(s) or its circuit.
6	Visual inspection 1) Check MAF sensor and air intake system. • Objects which block measuring duct and resistor of MAF sensor. • Other air flow which does not pass the MAF sensor. Are there in good condition?	Go to Step 7.	Repair or replace.
7	MAF sensor for performance check 1) With ignition switch turned OFF, install scan tool. 2) Start engine and warm up to normal operating temperature. 3) Check MAF value using scan tool (Refer to “Scan Tool Data” for normal value.). Is each value within specified?	Go to Step 8.	Go to “DTC P0101 Mass Air Flow Circuit Range / Performance” in this section.
8	ECT sensor for performance check 1) Check ECT sensor referring to Step 3 and 4 of “DTC P0118 Engine Coolant Temperature Circuit High” in this section. Is check result satisfactory?	Go to Step 9.	Faulty ECT sensor or its circuit.
9	HO2S-1 for performance check 1) Check HO2S-1 referring to Step 3 of “DTC P0131 / P0132 O2 Sensor (HO2S) Circuit Low Voltage / High Voltage (Sensor-1)” in this section. Is check result satisfactory?	Substitute a known-good ECM and recheck.	Faulty HO2S-1 or its circuit.

NOTE:

Upon completion of inspection and repair work, perform “DTC Confirmation Procedure” and confirm that the trouble has been corrected.

DTC P0300 / P0301 / P0302 / P0303 / P0304 Random Misfire Detected / Cylinder 1 / Cylinder 2 / Cylinder 3 / Cylinder 4 Misfire Detected

System Description

ECM measure the angle of the crankshaft based on the pulse signal from the CKP sensor and CMP sensor for each cylinder. If it detects a large change in the angle speed of the crankshaft, it concludes occurrence of a misfire. When the number of misfire is counted by ECM beyond the DTC detecting condition, it determine the cylinder where the misfire occurred and output it as DTC.

DTC Detecting Condition and Trouble Area

DTC detecting condition	Trouble area
DTC P0300: • Misfire, which causes catalyst to overheat during 200 engine revolutions, is detected at 2 or more cylinders. (MIL flashes as long as this misfire occurs continuously.) or • Misfire, which affects exhaust emission adversely during 1000 engine revolution, is detected at 2 or more cylinders. (2 driving cycle detection logic)	• Ignition system • Fuel injector and its circuit • Fuel pressure • EGR system • Abnormal air drawn in • Engine compression • Valve lash adjuster • Valve timing • Fuel shortage
DTC P0301, P0302, P0303, P0304: • Misfire, which causes catalyst to overheat during 200 engine revolutions, is detected at 1 cylinder. (MIL flashes as long as this misfire occurs continuously.) or • Misfire, which affects exhaust emission adversely during 1000 engine revolution, is detected at 1 cylinder. (2 driving cycle detection logic)	

DTC Confirmation Procedure

WARNING:

- **When performing a road test, select a place where there is no traffic or possibility of a traffic accident and be very careful during testing to avoid occurrence of an accident.**
- **Road test should be carried out with 2 persons, a driver and a tester, on a level road.**

NOTE:

Check to make sure that the following conditions are satisfied when using this "DTC Confirmation Procedure".

- **Intake air temp.: –7 °C, 19.4 °F or higher**
- **Engine coolant temp.: –10 °C, 14 °F or higher**
- **Altitude (barometric pressure): 2500 m, 8200 ft or less (540 mmHg, 72 kPa or more)**

1) With ignition switch turned OFF, connect scan tool.
2) Turn ON ignition switch and clear DTC using scan tool.
3) Drive vehicle under freeze frame data condition as noted for 1 min. or more.
4) Stop vehicle and check DTC and pending DTC.

DTC Troubleshooting

Step	Action	Yes	No
1	Was “Engine and Emission Control System Check” performed?	Go to Step 2.	Go to “Engine and Emission Control System Check” in this section.
2	Does fuel level meter indicate “E” level (empty)?	Add fuel and recheck.	Go to Step 3.
3	Ignition system check 1) Check spark plug and ignition spark of cylinder where misfire occurs, referring to “Spark Plugs” and “Ignition Spark Test” in Section 6F. Are they in good condition?	Go to Step 4.	Faulty ignition coil, wire harness, spark plug or other system parts.
4	Fuel injector circuit check 1) Using sound scope, check each injector operating sound at engine cranking or idling. Do all injectors make operating sound?	Go to Step 5.	Check coupler connection and wire harness of injector not making operating sound and injector itself. If OK, substitute a known-good ECM and recheck.
5	Fuel pressure check 1) Check fuel pressure referring to “Fuel Pressure Inspection” in Section 6E. Is check result satisfactory?	Go to Step 6.	Repair or replace.
6	Fuel injector check 1) Check fuel injector(s) referring to “Fuel Injector” in Section 6E. Is check result satisfactory?	Go to Step 7.	Replace.
7	Ignition timing check 1) Check ignition timing referring to “Ignition Timing” in Section 6F. Is check result satisfactory?	Go to Step 8.	Check related sensors.
8	EGR system check 1) Check EGR system referring to “EGR System” in Section 6E. Is check result satisfactory?	Go to Step 9.	Repair or replace.
9	Engine mechanical system check 1) Check engine mechanical parts or system which can cause engine rough idle or poor performance. • Engine compression (Refer to “Compression Check” in Section 6A3.) • Valve lash (Refer to “Valve Lash (Clearance)” in Section 6A3.) • Valve timing (Refer to “Timing Chain and Chain Tensioner” in Section 6A3.) Are they in good condition?	Check wire harness and connection of ECM ground, ignition system and fuel injector for intermittent open and short.	Repair or replace.

NOTE:

Upon completion of inspection and repair work, perform “DTC Confirmation Procedure” and confirm that the trouble has been corrected.

DTC P0327 / P0328 Knock Sensor Circuit Low / High

Wiring Diagram

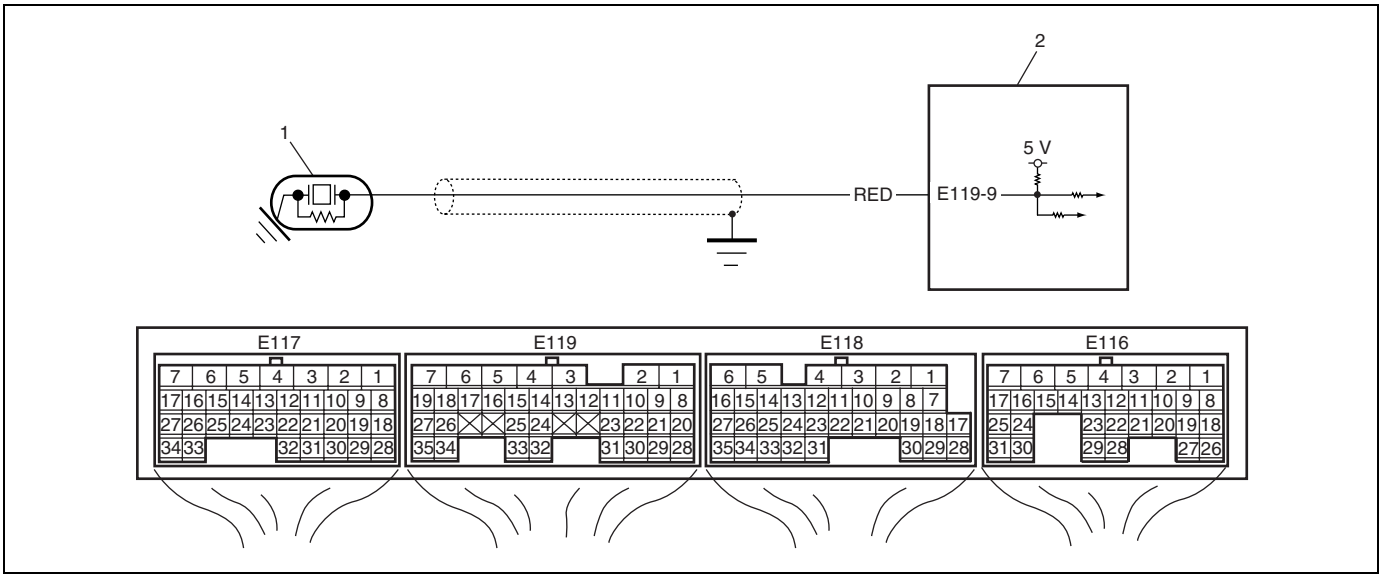

1. Knock sensor
2. ECM

DTC Detecting Condition and Trouble Area

DTC detecting condition	Trouble area
DTC will be set when all of the following conditions are detected for 0.5 seconds continuously. DTC P0327: • Engine is running • Voltage of knock sensor is less than 1.23 V (1 driving cycle detection logic) DTC P0328: • Engine is running • Voltage of knock sensor is 3.91 V or more (1 driving cycle detection logic)	• Open or short in knock sensor circuit • Knock sensor • ECM

DTC Confirmation Procedure

1) Connect scan tool to DLC with ignition switch turned OFF.
2) Turn ON ignition switch and clear DTC, pending DTC and freeze frame data by using scan tool.
3) Start engine and run it for 10 sec.
4) Check DTC by using scan tool.

DTC Troubleshooting

Step	Action	Yes	No
1	Was “Engine and Emission Control System Check” performed?	Go to Step 2.	Go to “Engine and Emission Control System Check” in this section.

Step	Action	Yes	No
2	Knock sensor circuit check 1) Measure voltage between "E119-9" terminal of ECM connector and vehicle body ground with engine running. Is voltage within 1.23 – 3.91 V?	Intermittent trouble. Check for intermittent referring to "Intermittent and Poor Connection" in Section 0A. If OK, substitute a known-good ECM and recheck.	Go to Step 3.
3	Knock sensor circuit for open check 1) Disconnect connector from knock sensor with ignition switch turned OFF. 2) Turn ON ignition switch, measure voltage between "RED" wire of knock sensor connector and engine ground. See Fig. 1. Is voltage 4 – 6 V?	Go to Step 6.	Go to Step 4.
4	Knock sensor circuit for open check 1) Turn ON ignition switch, measure voltage between "E119-9" terminal of ECM connector and engine ground. Is voltage 4 – 6 V?	"RED" wire in open circuit.	Go to Step 5.
5	Knock sensor circuit for short check 1) Disconnect connectors from ECM with ignition switch turned OFF. 2) Measure resistance between "E119-9" terminal of ECM connector and vehicle body ground. Is resistance infinity?	Go to Step 6.	"RED" wire in shorted to ground circuit. If wire is OK, substitute a known-good ECM and recheck.
6	Knock sensor circuit for short check 1) Turn ON ignition switch, measure voltage between "E119-9" terminal of ECM connector and vehicle body ground. Is voltage 0 V?	Go to Step 7.	"RED" wire in shorted to other circuit.
7	Knock sensor circuit for high resistance check 1) Measure resistance between "E119-9" terminal of ECM connector and "RED" wire terminal of knock sensor harness connector. Is resistance below 5 Ω?	Faulty knock sensor.	"RED" wire in high resistance circuit.

NOTE:

Upon completion of inspection and repair work, perform "DTC Confirmation Procedure" and confirm that the trouble has been corrected.

Fig. 1 for Step 3

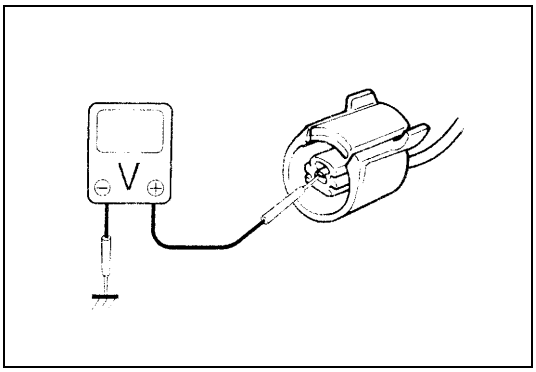

DTC P0335 Crankshaft Position (CKP) Sensor Circuit

Wiring Diagram

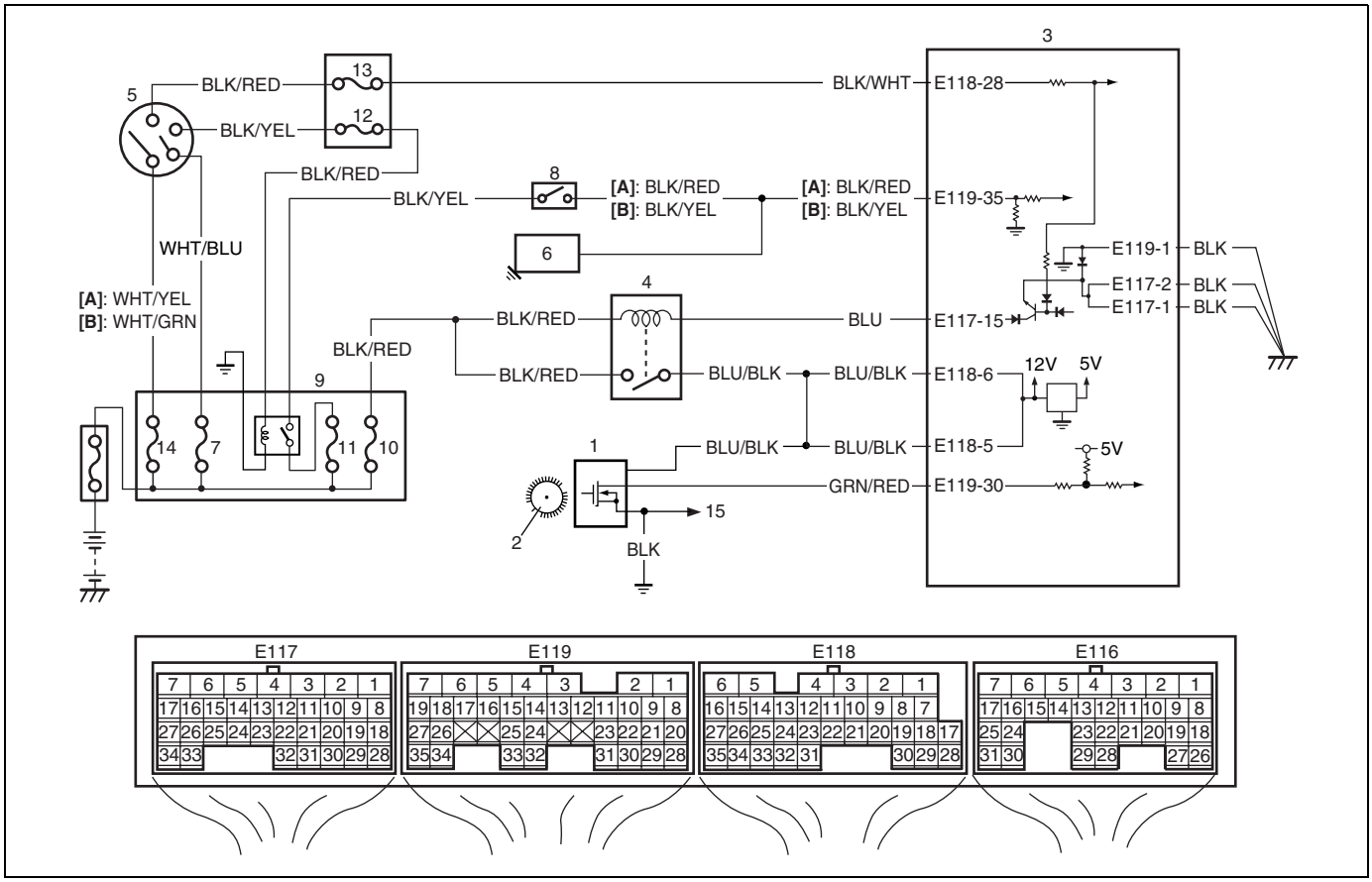

[A]: A/T vehicle	5. Ignition switch	11. "ST" fuse
[B]: M/T vehicle	6. Starting motor	12. "ST" fuse in circuit fuse box
1. CKP sensor	7. "IGN2" fuse	13. "IG" fuse
2. Sensor plate on crankshaft	8. Transmission range switch (A/T vehicle)	14. "IGN1" fuse
3. ECM	9. Relay box	15. To CMP sensor
4. Main relay	10. "FI" fuse	

DTC Detecting Condition and Trouble Area

DTC detecting condition	Trouble area
No CKP sensor signal for 2 sec. even if starting motor signal is inputting at engine cranking. (1 driving cycle detection logic)	• CKP sensor circuit open or short • Sensor plate teeth damaged • CKP sensor malfunction, foreign material being attached or improper installation • ECM • Engine start signal circuit malfunction

DTC Confirmation Procedure

1) With ignition switch turned OFF, connect scan tool.
2) Turn ON ignition switch and clear DTC using scan tool.
3) Crank engine for 3 – 5 sec.
4) Check DTC and pending DTC.

DTC Troubleshooting

Step	Action	Yes	No
1	Was “Engine and Emission Control System Check” performed?	Go to Step 2.	Go to “Engine and Emission Control System Check” in this section.
2	CKP sensor and connector for proper installation check Is CKP sensor installed properly and connector connected securely?	Go to Step 3.	Correct.
3	Wire harness and connection check 1) Disconnect connector from CKP sensor with ignition switch turned OFF. 2) Check for proper connection to CKP sensor at “BLU/BLK”, “GRN/RED” and “BLK” wire terminals. 3) If OK, turn ignition switch ON and check for voltage at “BLU/BLK”, “GRN/RED” and “BLK” wire terminals of disconnected CKP sensor connector. See Fig. 1. **CKP sensor voltage** **Terminal “B+”: 10 – 14 V** **Terminal “Vout”: 4 – 5 V** **Terminal “GND”: 0 V** Is check result satisfactory?	Go to Step 7.	Go to Step 4.
4	Was terminal “Vout” voltage in Step 3 within specification?	Go to Step 5.	“GRN/RED” wire open or shorted to ground / power supply circuit. If wire and connection are OK, substitute a known-good ECM and recheck.
5	Ground circuit check 1) Turn ignition switch to OFF position. 2) Measure resistance between “BLK” wire terminal of CKP sensor connector and engine ground. Is measured resistance value less than 3 Ω?	Go to Step 6.	“BLK” wire open or high resistance.
6	Was terminal “B+” voltage in Step 3 within specification?	Go to Step 7.	“BLU/BLK” wire open. If wire and connection are OK, substitute a known-good ECM and recheck.
7	Engine start signal check 1) Check starting motor circuit for opening and short referring to Step 2 of “DTC P0616 Starter Relay Circuit Low” and Step 3 and 4 of “DTC P0617 Starter Relay Circuit High” in this section. Is result in good condition?	Go to Step 8.	Repair or replace.

Step	Action	Yes	No
8	CKP sensor check 1) Check CKP sensor and sensor plate tooth referring to “Inspection” under “Crankshaft Position Sensor” in Section 6E. Is check result satisfactory?	Substitute a known-good ECM and recheck.	Replace CKP sensor or sensor plate.

NOTE:

Upon completion of inspection and repair work, perform “DTC Confirmation Procedure” and confirm that the trouble has been corrected.

Fig. 1 for Step 3

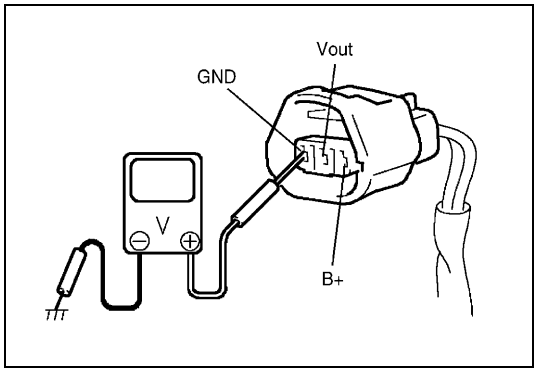

DTC P0340 Camshaft Position (CMP) Sensor Circuit

Wiring Diagram

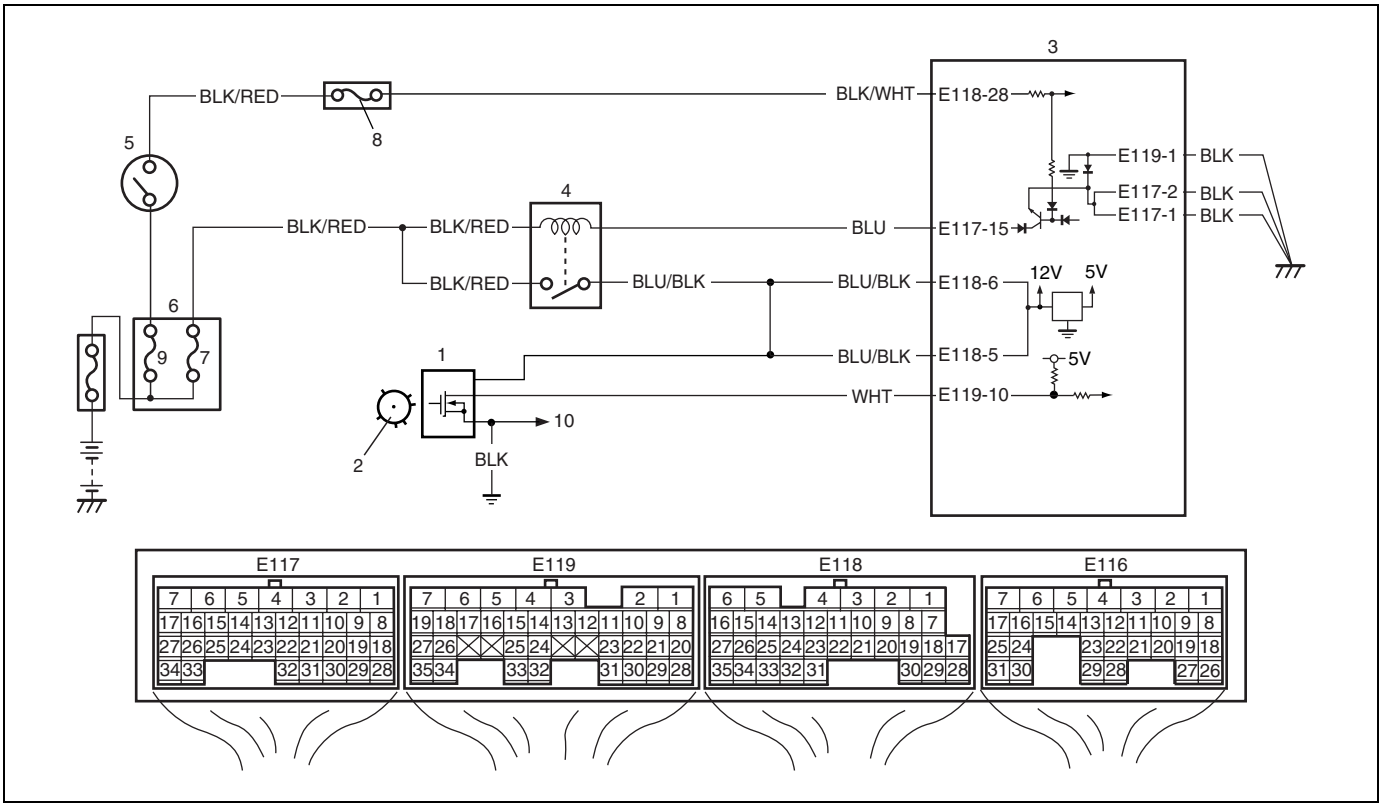

1. CMP sensor	4. Main relay	7. "FI" fuse	10. To CKP sensor
2. Signal rotor	5. Ignition switch	8. "IG" fuse	
3. ECM	6. Relay box	9. "IGN1" fuse	

System Description

The CMP sensor located on the transmission side of cylinder head consists of the signal generator (magnetic sensor) and signal rotor (intake camshaft portion).
The signal generator generates Reference signal through slits in the slit plate which turns together with the camshaft.

Reference signal

The CMP sensor generates 6 pulses of signals each of which has a different waveform length while the camshaft makes one full rotation. Refer to "Inspection of ECM and Its Circuits".
Based on these signals, ECM judges which cylinder piston is in the compression stroke and the engine speed.

DTC Detecting Condition and Trouble Area

DTC detecting condition	Trouble area
• CMP sensor pulse is less than 20 pulses per crankshaft 8 revolutions • CMP sensor pulse is more than 28 pulses per crankshaft 8 revolutions • CMP sensor pulse is less than 20 pulses between BTDC 155° CA and BTDC 5° CA with crankshaft 8 revolutions from engine start. (1 driving cycle detection logic)	• CMP sensor circuit open or short • Signal rotor teeth damaged • CMP sensor malfunction, foreign material being attached or improper installation • ECM

DTC Confirmation Procedure

1) With ignition switch turned OFF, connect scan tool.
2) Turn ON ignition switch and clear DTC using scan tool.
3) Crank engine for 5 sec.
4) Check DTC and pending DTC.

DTC Troubleshooting

Step	Action	Yes	No
1	Was “Engine and Emission Control System Check” performed?	Go to Step 2.	Go to “Engine and Emission Control System Check” in this section.
2	CMP sensor and connector for proper installation check Is CMP sensor installed properly and connector connected securely?	Go to Step 3.	Correct.
3	Wire harness and connection check 1) Disconnect connector from CMP sensor. 2) Check for proper connection to CMP sensor at “BLU/BLK”, “WHT” and “BLK” wire terminals. 3) If OK, turn ignition switch ON and check for voltage at “BLU/BLK”, “WHT” and “BLK” wire terminals of disconnected CMP sensor connector. See Fig. 1. **CMP sensor voltage** **Terminal “B+”: 10 – 14 V** **Terminal “Vout”: 4 – 5 V** **Terminal “GND”: 0 V** Is check result satisfactory?	Go to Step 7.	Go to Step 4.
4	Was terminal “Vout” voltage in Step 3 within specification?	Go to Step 5.	“WHT” wire open or shorted to ground / power supply circuit. If wire and connection are OK, substitute a known-good ECM and recheck.
5	Ground circuit check 1) Turn ignition switch to OFF position. 2) Measure resistance between “BLK” wire terminal of CMP sensor connector and engine ground. Is measured resistance value less than 3 Ω?	“BLU/BLK” wire open.	“BLK” wire open or high resistance.
6	Was terminal “B+” voltage in Step 3 within specification?	Go to Step 7.	“BLU/BLK” wire open. If wire and connection are OK, substitute a known-good ECM and recheck.
7	CMP sensor check 1) Check CMP sensor and signal rotor tooth referring to “Inspection” under “Camshaft Position Sensor” in Section 6E. Is check result satisfactory?	Substitute a known-good ECM and recheck.	Replace CMP sensor or intake camshaft.

NOTE:

Upon completion of inspection and repair work, perform "DTC Confirmation Procedure" and confirm that the trouble has been corrected.

Fig. 1 for Step 3

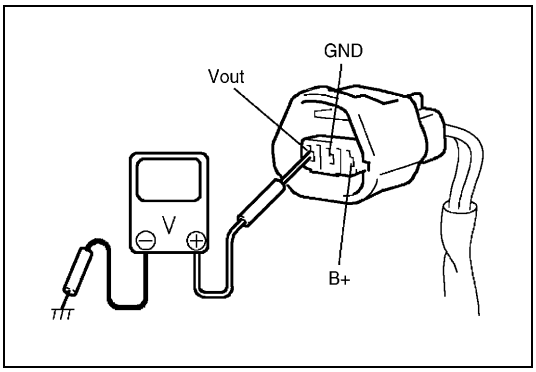

DTC P0401 / P0402 Exhaust Gas Recirculation Flow Insufficient Detected / Excessive Detected

System and Wiring Diagram

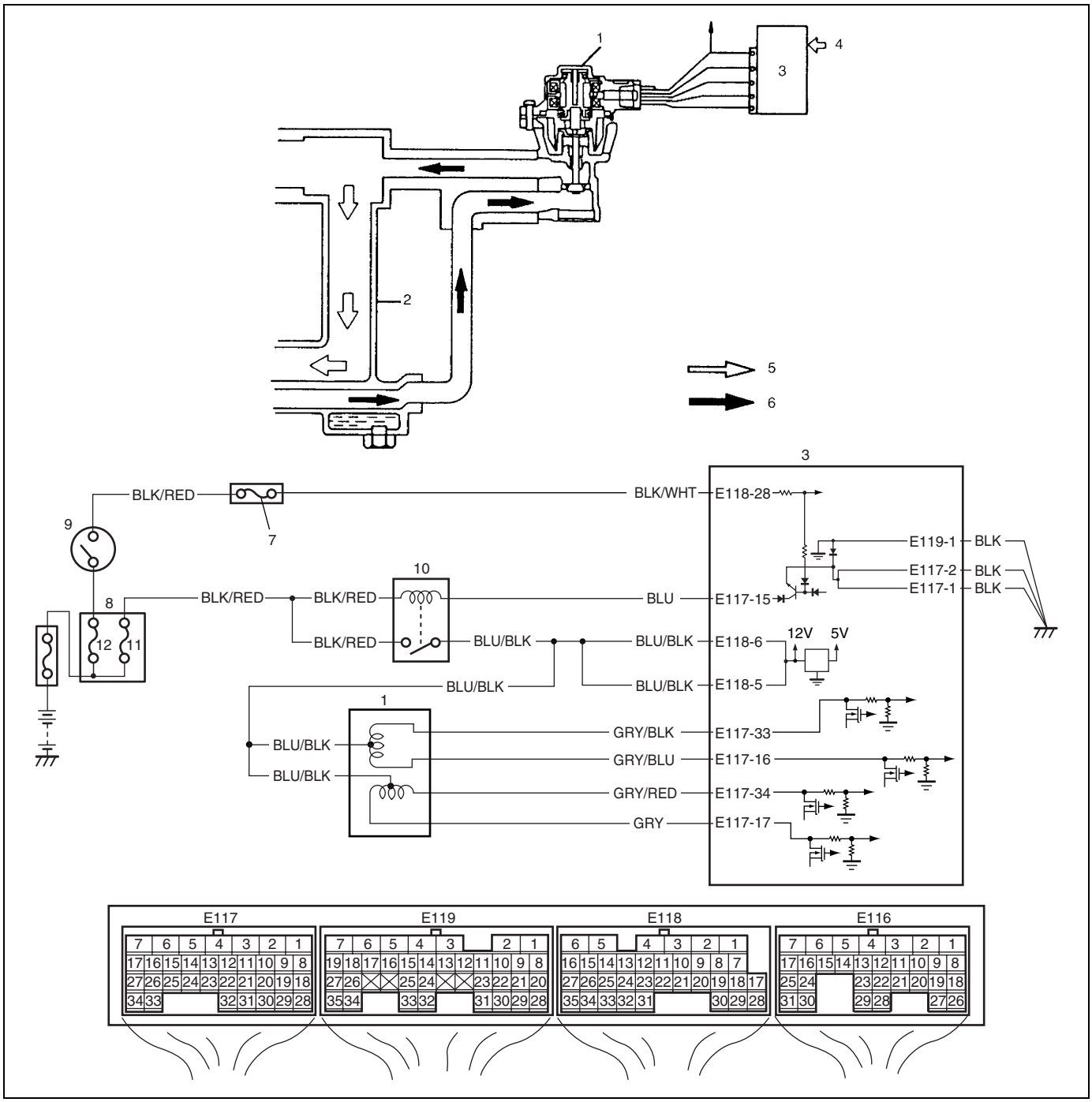

1. EGR valve	4. Sensed information	7. "IG" fuse	10. Main relay
2. Intake manifold	5. Fresh air	8. Relay box	11. "FI" fuse
3. ECM	6. Exhaust gas	9. Ignition switch	12. "IGN1" fuse

DTC Detecting Condition and Trouble Area

DTC detecting condition	Trouble area
DTC P0401: Difference in intake manifold absolute pressure between opened EGR valve and closed EGR valve is smaller than specified value. (*2 driving cycle detection logic, monitoring once / 1 driving) DTC P0402: Difference in intake manifold absolute pressure between opened EGR valve and closed EGR valve is larger than specified value. (*2 driving cycle detection logic, monitoring once / 1 driving)	• EGR valve • EGR passage • MAP sensor • ECM

DTC Confirmation Procedure

WARNING:

- **When performing a road test, select a place where there is no traffic or possibility of a traffic accident and be very careful during testing to avoid occurrence of an accident.**
- **Road test should be carried out with 2 persons, a driver and a tester, on a level road.**

NOTE:

Check to make sure that the following conditions are satisfied when using this "DTC confirmation procedure".

- **Intake air temperature at engine start: –10 °C (14 °F) to 80 °C (176 °F)**
- **Intake air temperature: –10 °C (14 °F) to 70 °C (158 °F)**
- **Engine coolant temperature: 70 °C (158 °F) to 150 °C (302 °F)**
- **Altitude (barometric pressure): 2400 m, 8000 ft or less (560 mmHg, 75 kPa or more)**

1) With ignition switch turned OFF, connect scan tool.
2) Turn ON ignition switch and clear DTC using scan tool.
3) Start engine and warm up to normal operating temperature.
4) Run engine at idle for 10 min.
5) Drive vehicle and increase engine speed 3000 rpm in 3rd gear.
6) Release accelerator pedal and with engine brake applied, keep vehicle coasting for 5 sec. or more. (Keep fuel cut condition for 5 sec. or more) If fuel cut condition is not kept for 5 sec. or more, coast down a slope in engine speed 1000 – 3000 rpm for 5 sec. or more.
7) Stop vehicle and run engine at idle.
8) Check DTC and pending DTC by using scan tool.

DTC Troubleshooting

Step	Action	Yes	No
1	Was “Engine and Emission Control System Check” performed?	Go to Step 2.	Go to “Engine and Emission Control System Check” in this section.
2	Do you have SUZUKI scan tool?	Go to Step 3.	Go to Step 5.
3	EGR valve operation check 1) With ignition switch turned OFF, install SUZUKI scan tool to DTC. 2) Check EGR system referring to “System Inspection” under “EGR System” in Section 6E. Is it in good condition?	Go to Step 4.	Go to Step 5.
4	MAP sensor check 1) Check MAP sensor for performance referring to “Manifold Absolute Pressure Sensor (MAP Sensor)” in Section 6E. Is check result satisfactory?	Intermittent trouble or faulty ECM. Check for intermittent referring to “Intermittent and Poor Connection” in Section 0A.	Repair or replace.
5	EGR valve control circuit check 1) Check that EGR valve control circuits are in good condition referring to Step 2 to 5 of “DTC P0403 Exhaust Gas Recirculation Control Circuit” in this section. Are circuits in good condition?	Go to Step 6.	Repair or replace EGR valve control circuit(s).
6	EGR valve check 1) Check EGR valve referring to “Inspection” under “EGR System” in Section 6E. Is check result satisfactory?	Go to Step 7.	Faulty EGR valve.
7	MAP sensor check 1) Check MAP sensor for performance referring to “Manifold Absolute Pressure Sensor (MAP Sensor)” in Section 6E. Is check result satisfactory?	EGR passage clogged, If OK, substitute a known-good ECM and recheck.	Repair or replace.

NOTE:

Upon completion of inspection and repair work, perform “DTC Confirmation Procedure” and confirm that the trouble has been corrected.

DTC P0403 Exhaust Gas Recirculation Control Circuit

Wiring Diagram

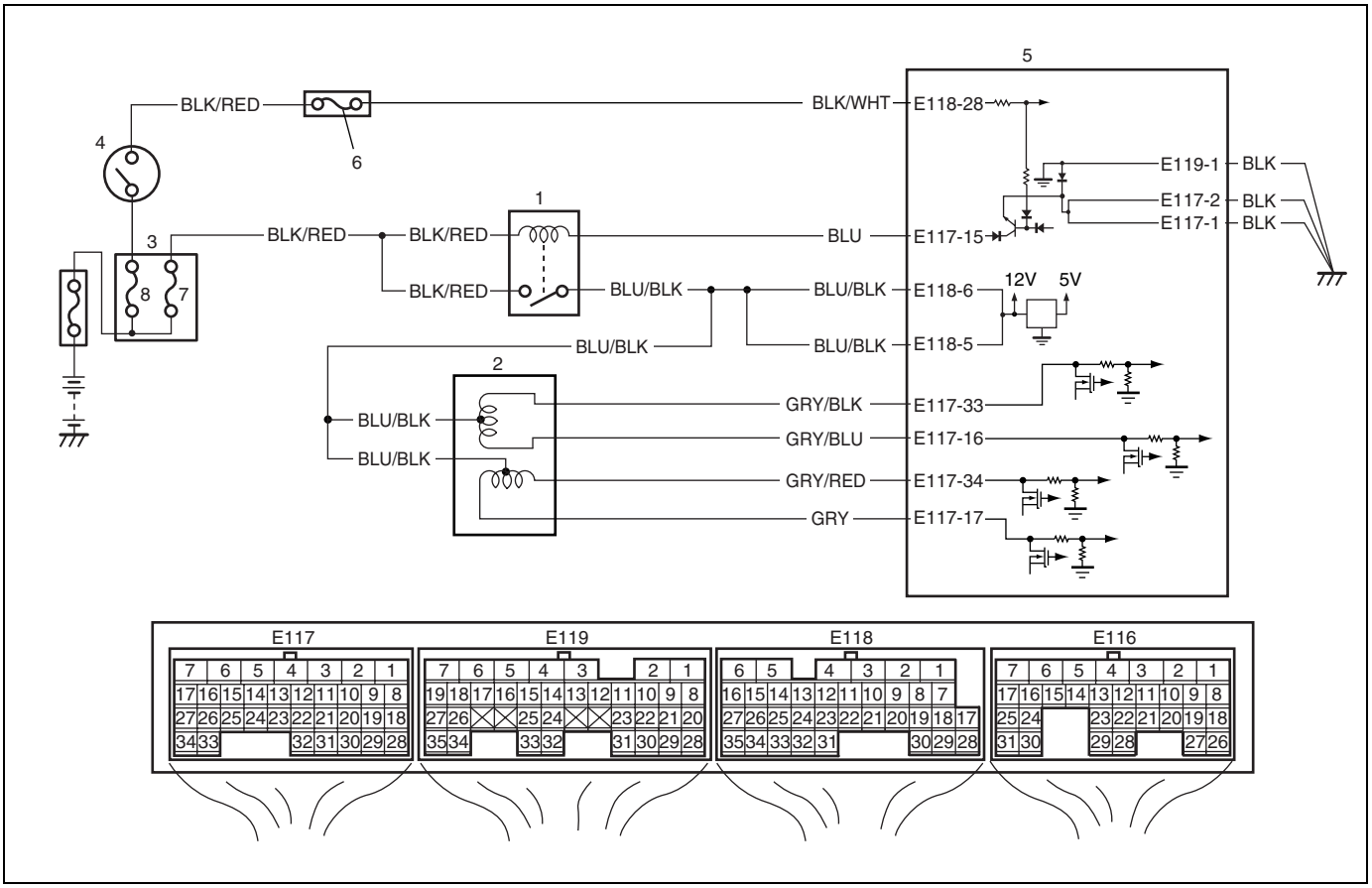

1. Main relay	3. Relay box	5. ECM	7. "FI" fuse
2. EGR valve	4. Ignition switch	6. "IG" fuse	8. "IGN1" fuse

DTC Detecting Condition and Trouble Area

DTC detecting condition	Trouble area
EGR valve output voltage is different from output command with more than one pole out of 4 poles. (1 driving cycle detection logic)	• EGR valve circuit open • EGR valve • ECM

DTC Confirmation Procedure

WARNING:

- **When performing a road test, select a place where there is no traffic or possibility of a traffic accident and be very careful during testing to avoid occurrence of an accident.**
- **Road test should be carried out with 2 persons, a driver and a tester, on a level road.**

1) With ignition switch turned OFF, connect scan tool to DLC.
2) Turn ON ignition switch and clear DTC using scan tool.
3) Start engine and warm it up to normal operating temperature.
4) Drive vehicle in 2000 – 3500 rpm of engine speed.
5) Keep above vehicle speed for 1 min. (Throttle valve opening is kept constant in this step.)
6) Stop vehicle and check DTC and pending DTC.

DTC Troubleshooting

Step	Action	Yes	No
1	Was “Engine and Emission Control System Check” performed?	Go to Step 2.	Go to “Engine and Emission Control System Description” in this section.
2	EGR valve power supply circuit check 1) With ignition switch turned OFF, disconnect EGR valve connector. 2) With ignition switch turned ON, measure voltage between “BLU/BLK” wire terminals of EGR valve connector and vehicle body ground. Is check voltage 10 – 14 V?	Go to Step 3.	“BLU/BLK” wire in open circuit.
3	Wire circuit check 1) Disconnect connectors from ECM with ignition switch turned OFF. 2) Turn ON ignition switch. 3) Measure voltage between engine ground and each “GRY/BLK”, “GRY/BLU”, “GRY/RED”, “GRY” wire terminals of EGR valve connector. Is each voltage 0 V?	Go to Step 4.	Faulty wire(s) shorted to other circuits. If wires are OK, substitute a known-good ECM and recheck.
4	Wire circuit check 1) With ignition switch turned OFF, measure resistance between engine ground and each “GRY/BLK”, “GRY/BLU”, “GRY/RED”, “GRY” wire terminals of EGR valve connector. Is resistance infinity?	Go to Step 5.	Faulty wire(s) shorted to ground circuit. If wires are OK, substitute a known-good ECM and recheck.
5	Short circuit check for EGR valve control circuit 1) With ignition turned OFF, measure resistance between each EGR valve control circuit wire (“GRY/BLK”, “GRY/BLU”, “GRY/RED” and “GRY” wire) and each EGR valve control circuit wire. Are they each resistance infinity?	Go to Step 6.	Faulty wire in short circuit.
6	EGR valve stepper motor coil circuit check 1) With ignition switch turned OFF, connect EGR valve connector. 2) Measure resistance between “E118-5/6” and each “E117-33”, “E117-16”, “E117-34”, “E117-17” terminals of ECM connector. Is each resistance 20 – 31 Ω at 20 °C, 68 °F?	Faulty ECM substitute a known-good ECM and recheck.	Go to Step 7.
7	EGR valve check 1) Check EGR valve resistance referring to “Inspection” under “EGR System” in Section 6E. Is resistance within specified value?	Faulty wire(s) in open or high resistance circuit. If wires are OK, substitute a known-good ECM and recheck.	Faulty EGR valve.

NOTE:

Upon completion of inspection and repair work, perform “DTC Confirmation Procedure” and confirm that the trouble has been corrected.

DTC P0420 Catalyst System Efficiency below Threshold

System and Wiring Diagram

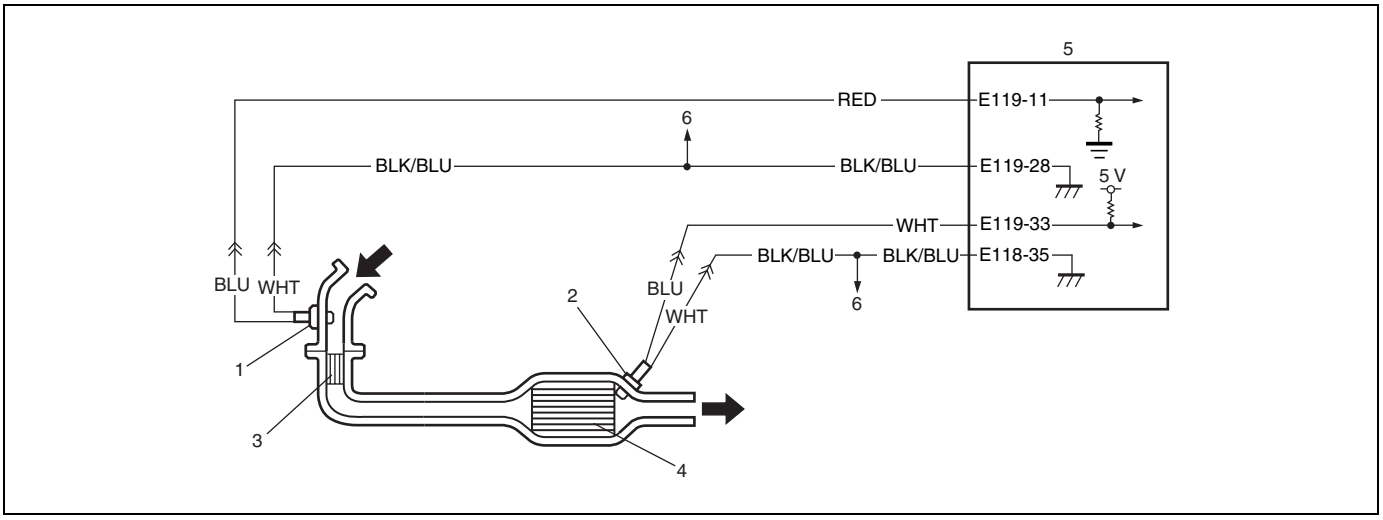

1. HO2S-1	3. Warm up three way catalytic converter	5. ECM
2. HO2S-2	4. Three way catalytic converter	6. Other sensors

Circuit Description

ECM monitors oxygen concentration in the exhaust gas which has passed the warm up three way catalytic converter and three way catalytic converter by HO2S-2. When the catalyst is functioning properly, the variation cycle of HO2S-2 output voltage (oxygen concentration) is slower than that of HO2S-1 output voltage because of the amount of oxygen in the exhaust gas which has been stored in warm up three way catalytic converter and three way catalytic converter.

Reference

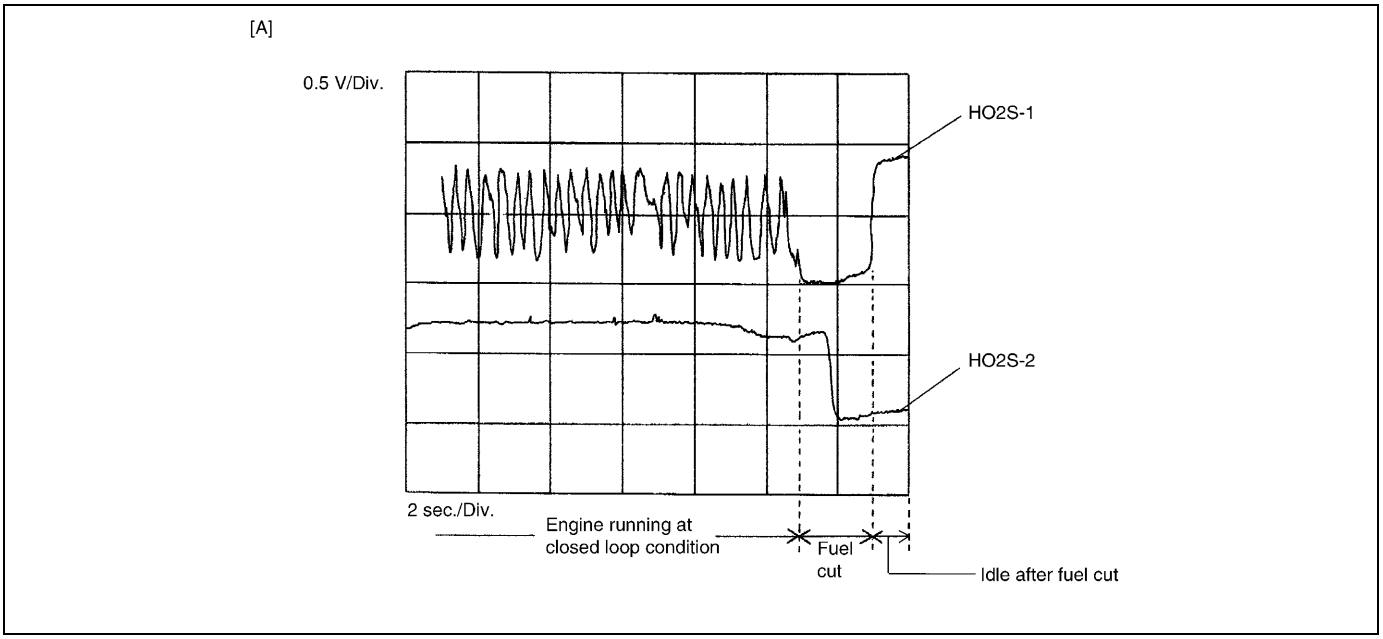

[A]: Oscilloscope waveforms

DTC Detecting Condition and Trouble Area

DTC detecting condition	Trouble area
• While vehicle running at constant speed under other than high load. • Time from rich or lean switching command is output till HO2S-2 output voltage crosses 0.45 V is less than specified value. (*2 driving cycle detection logic, monitoring once / 1 driving)	• Exhaust gas leak • Warm up three way catalytic converter malfunction • HO2S-2 malfunction • HO2S-1 malfunction • Three way catalytic converter malfunction

DTC Confirmation Procedure

WARNING:
- **When performing a road test, select a place where there is no traffic or possibility of a traffic accident and be very careful during testing to avoid occurrence of an accident.**
- **Road test should be carried out with 2 persons, a driver and a tester, on a level road.**

NOTE:
- **Check to make sure that the following conditions are satisfied when using this "DTC Confirmation Procedure".**
- **Intake air temp.: –7 °C, 19.4 °F or higher**
- **Engine coolant temp.: 70 °C, 158 °F or higher**
- **Altitude (barometric pressure): 2500 m, 8200 ft or less (540 mmHg, 72 kPa or more)**

1) Connect scan tool to DLC with ignition switch turned OFF.
2) Turn ON ignition switch and clear DTC using scan tool.
3) Increase vehicle speed to 50 – 60 mph, 80 – 100 km/h. (engine speed: 2500 – 3000 r/min.)
4) Keep above vehicle speed for 10 min. or more (Throttle valve opening is kept constant in this step).
5) Stop vehicle and check if DTC / pending DTC exists using scan tool. If not, check if catalyst monitoring test has completed using scan tool. If not in both of above checks (i.e., no DTC / pending DTC and catalyst monitoring test not completed), check vehicle condition (environmental) and repeat Step 3) through 5).

DTC Troubleshooting

Step	Action	Yes	No
1	Was "Engine and Emission Control System Check" performed?	Go to Step 2.	Go to "Engine and Emission Control System Check" in this section.
2	Exhaust system visual check 1) Check exhaust system for leaks, damage and loose connection. Is it in good condition?	Go to Step 3.	Repair or replace.

Step	Action	Yes	No
3	HO2S-2 ground check 1) Disconnect connector from HO2S-2 with ignition switch turned OFF. 2) Check for proper connection to HO2S-2 connector at “WHT” and “BLK/BLU” wire terminals. 3) If wire and connection are OK, measure resistance between “BLK/BLU” wire terminal of HO2S-2 connector and engine ground. Is resistance less than 5 Ω?	Go to Step 4.	“BLK/BLU” wire open or high resistance circuit. Poor “E118-35” terminal connection. Faulty ECM ground. If they are OK, substitute a known-good ECM and recheck.
4	ECM voltage check 1) Turn ON ignition switch. 2) Measure voltage between “E119-33” terminal of ECM connector and vehicle body ground. Is voltage 4 – 5 V?	Go to Step 5.	Poor “E119-33” terminal connection. If connection is OK, substitute a known-good ECM and recheck.
5	Wire circuit check 1) Disconnect connectors from ECM with ignition switch turned OFF. 2) Measure resistance between “WHT” wire terminal of HO2S-2 connector and “E119-33” terminal of ECM connector. Is resistance less than 5 Ω?	Go to Step 6.	“WHT” wire high resistance circuit or open circuit.
6	Wire circuit check 1) Measure resistance between “WHT” wire terminal of HO2S-2 connector and body ground. Is resistance infinity?	Go to Step 7.	“WHT” wire shorted to ground circuit.
7	HO2S-2 signal circuit check 1) Turn ON ignition switch. 2) Measure voltage between “WHT” wire terminal of HO2S-2 connector and vehicle body ground. Is voltage 0 V?	Replace exhaust manifold (built in warm up three way catalytic converter) and exhaust pipe (built in three way catalytic converter).	“WHT” wire shorted to other circuit. If wire is OK, replace HO2S-2.

NOTE:

Upon completion of inspection and repair work, perform “DTC Confirmation Procedure” and confirm that the trouble has been corrected.

DTC P0443 Evaporative Emission System Purge Control Valve Circuit

Wiring Diagram

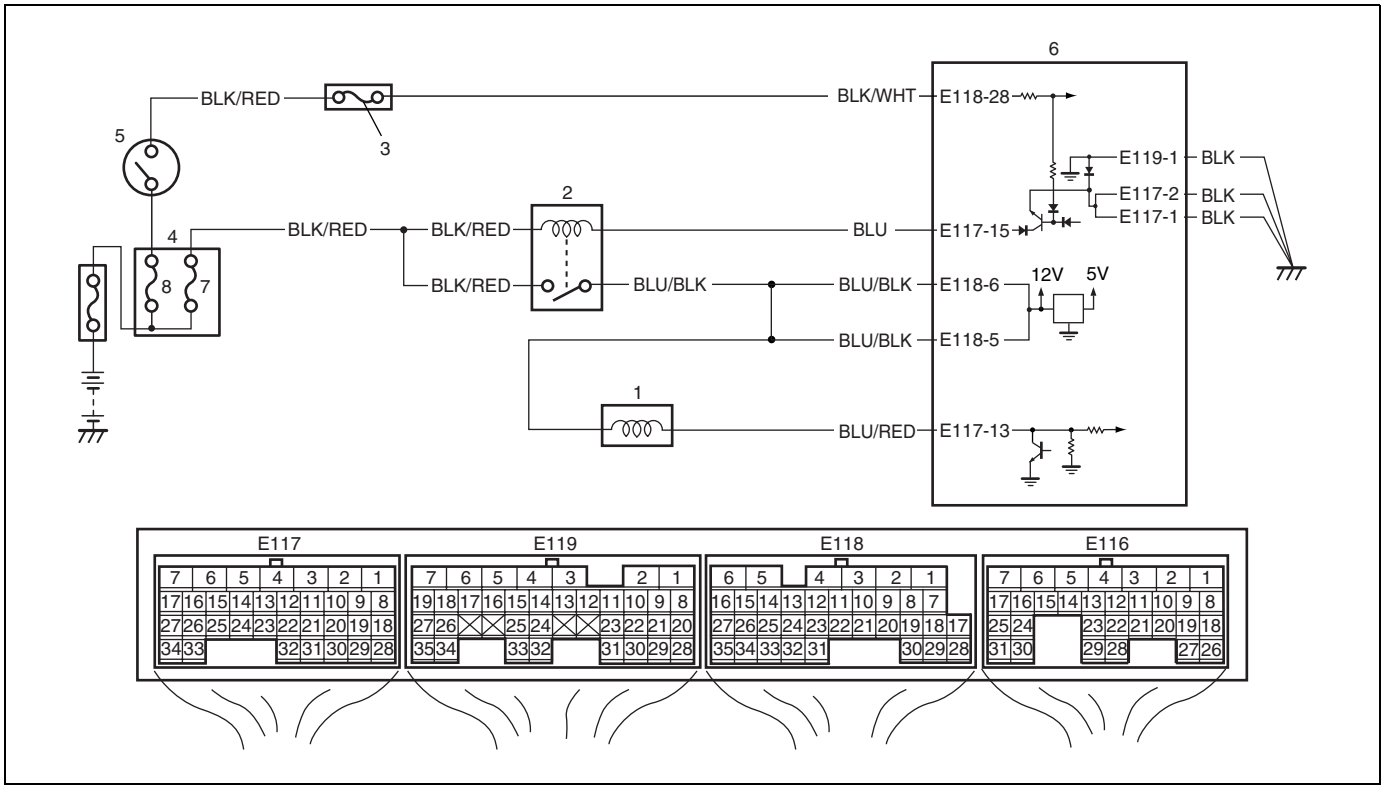

1. EVAP canister purge valve	3. "IG" fuse	5. Ignition switch	7. "FI" fuse
2. Main relay	4. Relay box	6. ECM	6. "IGN1" fuse

DTC Detecting Condition and Trouble Area

DTC detecting condition	Trouble area
Monitor signal of EVAP canister purge valve is different from command signal. (Circuit open or short) (2 driving cycle detection logic)	• EVAP canister purge valve • EVAP canister purge valve circuit • ECM

DTC Confirmation Procedure

WARNING:

- **When performing a road test, select a place where there is no traffic or possibility of a traffic accident and be very careful during testing to avoid occurrence of an accident.**
- **Road test should be carried out with 2 persons, a driver and a tester, on a level road.**

1) With ignition switch OFF, connect scan tool to DLC.
2) Turn ON ignition switch and clear DTC using scan tool.
3) Start engine and warm up normal operating temperature.
4) Drive vehicle at more than 40 km/h, 25 mph for 5 min. or more.
5) Check DTC and pending DTC.

DTC Troubleshooting

WARNING:
In order to reduce risk of fire and personal injury, this work must be performed in a well ventilated area and away from any open flames such as gas hot water.

Step	Action	Yes	No
1	Was "Engine and Emission Control System Check" performed?	Go to Step 2.	Go to "Engine and Emission Control System Check" in this section.
2	EVAP canister purge power supply circuit check 1) Turn OFF ignition switch, disconnect connector from EVAP canister purge valve. 2) Measure voltage between engine ground and "BLU/BLK" wire terminal of EVAP canister purge valve connector with ignition switch turned ON. Is it voltage 10 – 14 V?	Go to Step 3.	"BLU/BLK" wire open circuit.
3	Wire circuit check 1) Disconnect connectors from ECM with ignition switch turned OFF. 2) Measure resistance between "E117-13" terminal of ECM connector and vehicle body ground. Is resistance infinity?	Go to Step 4.	"BLU/RED" wire shorted to ground circuit.
4	Wire circuit check 1) Measure voltage between "E117-13" terminal of ECM connector and vehicle body ground with ignition switch turned ON. Is voltage 0 V?	Go to Step 5.	"BLU/RED" wire shorted to other circuits.
5	Wire circuit check 1) Connect connector to purge control valve with ignition switch turned OFF. 2) Turn ON ignition switch, measure voltage between "E117-13" terminal of ECM connector and vehicle body ground. Is it voltage 10 – 14 V?	Go to Step 6.	"BLU/RED" wire open circuit.
6	EVAP canister purge control valve check 1) Check EVAP canister purge control valve referring to "Evaporative Emission (EVAP) Control System" in Section 6E. Is it in good condition?	Go to Step 7.	Faulty EVAP canister purge control valve.
7	EVAP canister purge control circuit check 1) With ignition switch turn OFF, measure resistance between "E118-5/6" terminal and "E117-13" terminal of ECM connector. Is resistance below 40 Ω at 20 °C, 68 °F?	Faulty ECM, substitute a known-good ECM and recheck.	"BLU/BLK" and/or "BLU/RED" wire in high resistance circuit.

NOTE:

Upon completion of inspection and repair work, perform "DTC Confirmation Procedure" and confirm that the trouble has been corrected.

DTC P0481 Fan 2 (A/C Condenser Fan) Control Circuit

Wiring Diagram

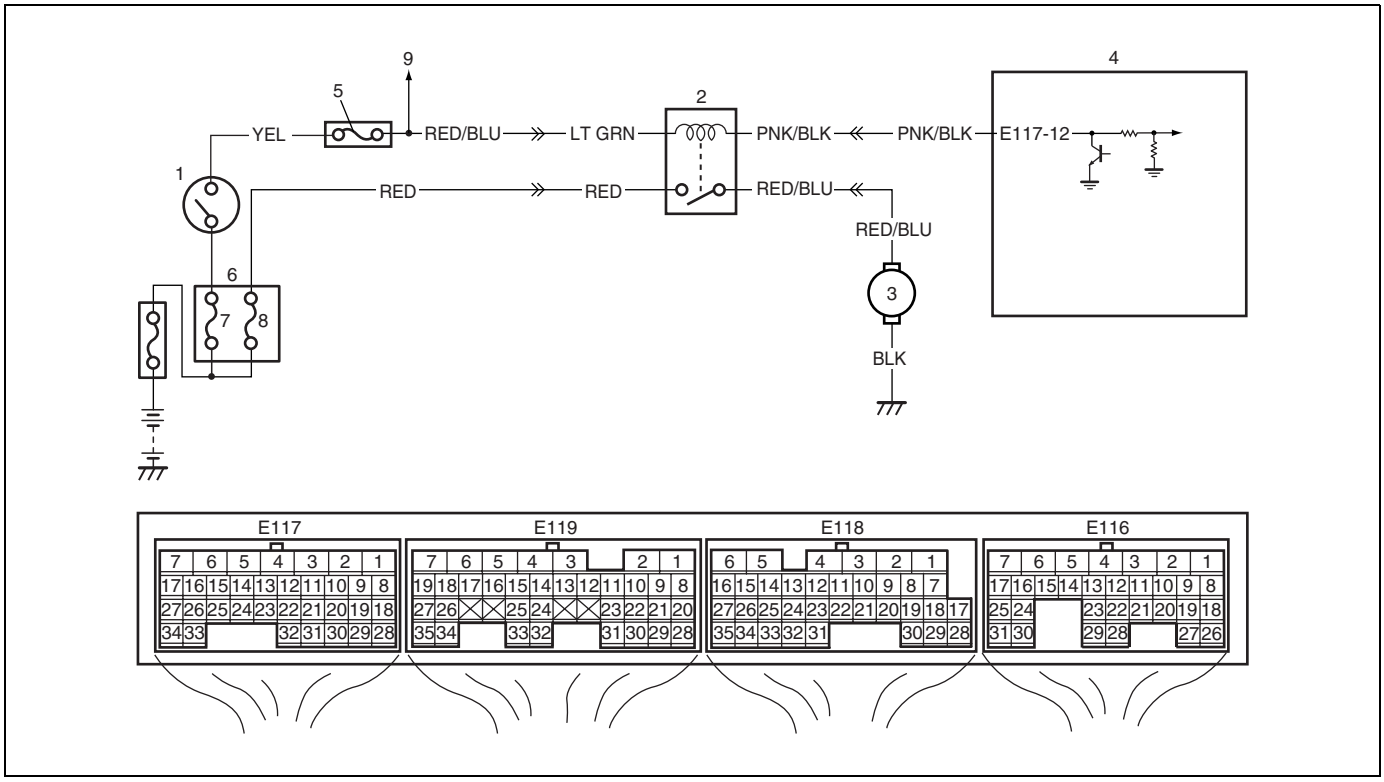

1. Ignition switch	4. ECM	7. "IGN2" fuse
2. A/C condenser fan control relay	5. "IG2 SIG" fuse	8. "A/C" fuse
3. A/C condenser fan motor	6. Relay box	9. To blower heater relay

DTC Detecting Condition and Trouble Area

DTC detecting condition	Trouble area
Monitor signal of A/C condenser fan control relay is different from command signal. (2 driving cycle detecting logic)	• A/C condenser fan control relay • A/C condenser fan control relay circuit • ECM

DTC Confirmation Procedure

1) Turn ignition switch OFF.
2) Clear DTC with ignition switch ON.
3) Start engine and then turn both A/C switch and heater blower switch ON for 10 sec or more.
4) Run engine at idle for 5 sec or more which A/C switch and heater blower switch OFF.
5) Check DTC and pending DTC.

DTC Troubleshooting

WARNING:
Keep hands, tools, and clothing away from A/C condenser fan to help prevent personal injury. This fan is electric and can come on whether or not the engine is running. The fan can start automatically in response to the ECT sensor with the ignition switch in the "ON" position.

Step	Action	Yes	No
1	Was "Engine and Emission Control System Check" performed?	Go to Step 2.	Go to "Engine and Emission Control System Check" in this section.
2	A/C condenser fan control relay circuit check 1) Check for proper connection to ECM at "E117-12" terminal with ignition switch turned OFF. 2) Measure voltage between "E117-12" terminal of ECM connector and vehicle body ground under the following condition. **Voltage between "E117-12" terminal of ECM connector and vehicle body ground** **While engine running, A/C switch and heater blower switch ON: 0 – 1 V** **While engine running, A/C switch and heater blower switch OFF: 10 – 14 V** Is each voltage within specified value?	Intermittent trouble. Check for intermittent referring to "Intermittent and Poor Connection" in Section 0A.	Go to Step 3.
3	A/C condenser fan control relay power supply circuit check 1) Remove A/C condenser fan control relay (1) with ignition switch turned OFF. See Fig. 1. 2) Check for proper connection to A/C condenser fan control relay at "LT GRN" and "PNK/BLK" wire terminals. 3) If OK, measure voltage between "LT GRN" wire terminal of A/C condenser fan control relay connector and vehicle body ground with ignition switch turned ON. Is voltage 10 – 14 V?	Go to Step 4.	"LT GRN" and/or "RED/BLU" wire in open or high resistance circuit.
4	A/C condenser fan control relay circuit check 1) Disconnect connectors from ECM with ignition switch turned OFF. 2) Measure resistance between "E117-12" terminal of ECM connector and vehicle body ground. Is resistance infinity?	Go to Step 5.	"PNK/BLK" wire shorted to ground circuit.
5	A/C condenser fan control relay check 1) Check A/C condenser fan control relay referring to "Main Relay, Fuel Pump Relay, A/C Compressor Relay and A/C Condenser Fan Control Relay" in Section 6E. Is check result satisfactory?	"PNK/BLK" wire in open circuit. If wire is OK, substitute a known-good ECM and recheck.	Replace A/C condenser fan control relay.

NOTE:

Upon completion of inspection and repair work, perform "DTC Confirmation Procedure" and confirm that the trouble has been corrected.

Fig. 1 for Step 3

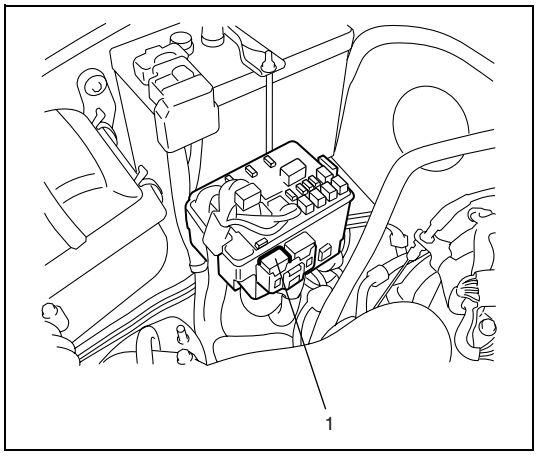

DTC P0500 Vehicle Speed Sensor (VSS) Malfunction

Wiring Diagram

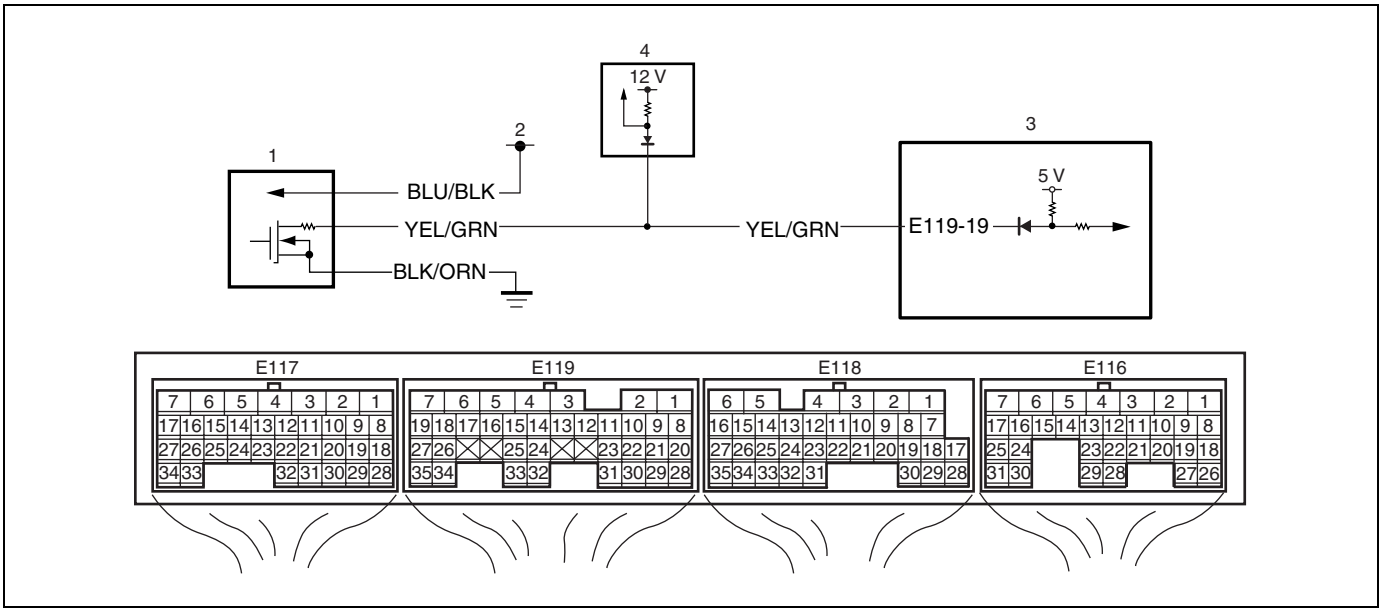

[A]: A/T vehicle	1. VSS	3. ECM
[B]: M/T vehicle	2. To main relay	4. Combination meter

DTC Detecting Condition and Trouble Area

DTC detecting condition	Trouble area
• Vehicle speed signal is not input while fuel cut at deceleration for 4 seconds continuously at 4000 rpm or less. • Vehicle speed signal is not input even if engine running with more than 3600 rpm at D-Range for 4 sec. (2 driving cycle detection logic)	• "BLK/ORN" circuit open • "YEL/GRN" or "BLU/BLK" circuit open or short • VSS malfunction • Combination meter malfunction • ECM malfunction

DTC Confirmation Procedure

WARNING:
- **When performing a road test, select a place where there is no traffic or possibility of a traffic accident and be very careful during testing to avoid occurrence of an accident.**
- **Road test should be carried out with 2 persons, a driver and a tester.**

1) With ignition switch turned OFF, connect scan tool.
2) Turn ON ignition switch and clear DTC using scan tool.
3) Warm up engine to normal operating temperature.
4) Drive vehicle at 3000 rpm (engine speed) with 5th gear or D-range.
5) Release accelerator pedal and with engine brake applied, keep vehicle coasting for 6 sec. or more (fuel cut condition for 5 sec. or more) and stop vehicle.
6) For A/T vehicle, drive vehicle at more than 3600 rpm for 10 sec.
7) Check pending DTC and DTC.

DTC Troubleshooting

Step	Action	Yes	No
1	Was “Engine and Emission Control System Check” performed?	Go to Step 2.	Go to “Engine and Emission Control System Check” in this section.
2	Vehicle speed signal check Is vehicle speed displayed on scan tool in Step 4) and 5) of “DTC Confirmation Procedure”?	Intermittent trouble. Check for intermittent referring to “Intermittent and Poor Connection” in Section 0A.	Go to Step 3.
3	Power supply circuit check 1) With ignition switch turned OFF, disconnect connector from VSS. 2) Check for proper connection to “BLU/BLK”, “YEL/GRN” and “BLK/ORN” wire terminals of VSS connector. 3) If wires are OK, turn ON ignition switch, measure voltage between vehicle body ground and “BLU/BLK” wire terminal of VSS connector. See Fig. 1. Is it voltage 10 – 14 V?	Go to Step 4.	“BLU/BLK” wire open circuit.
4	Ground circuit check 1) Measure resistance between vehicle body ground and “BLK/ORN” wire terminal of VSS connector with ignition switch turn OFF. Is resistance below 5 Ω?	Go to Step 5.	“BLK/ORN” wire open or high resistance circuit.
5	Wire circuit check 1) Turn ON ignition switch, measure voltage between vehicle body ground and “YEL/GRN” wire terminal at VSS connector. Is it voltage 4 – 5 V?	Go to Step 10.	Go to Step 6.
6	Wire circuit check 1) Turn OFF ignition switch. 2) Disconnect connectors from combination meter. 3) Check for proper connection to “YEL/GRN” wire terminal of combination meter connector. 4) Turn ON ignition switch, measure voltage between vehicle body ground and “YEL/GRN” wire terminal of VSS connector. Is it voltage 10 – 12 V?	Substitute a known-good combination meter and recheck.	Go to Step 7.
7	ECM voltage check 1) Turn ON ignition switch, measure voltage between vehicle body ground and “E119-19” terminal at ECM connector. Is it voltage 4 – 5 V?	“YEL/GRN” wire open circuit.	Go to Step 8.

Step	Action	Yes	No
8	Short circuit check 1) Disconnect connectors from ECM with ignition switch turned OFF. 2) Turn ON ignition switch, measure voltage between vehicle body ground and “E119-19” terminal of ECM connector. Is it voltage 0 V?	Go to Step 9.	“YEL/GRN” wire shorted to power supply circuit.
9	Short circuit check 1) Measure resistance between vehicle body ground and “E119-19” terminal of ECM connector with ignition switch turned OFF. Is resistance infinity?	Go to Step 10.	“YEL/GRN” wire shorted to ground circuit. If wire are OK, substitute a known-good ECM and recheck.
10	VSS check 1) Check VSS and signal rotor tooth referring to “Inspection” under “Vehicle Speed Sensor (VSS)” in Section 6E. Is check result satisfactory?	Substitute a known-good ECM and recheck.	Replace VSS or signal rotor.

NOTE:

Upon completion of inspection and repair work, perform “DTC Confirmation Procedure” and confirm that the trouble has been corrected.

Fig. 1 for Step 3

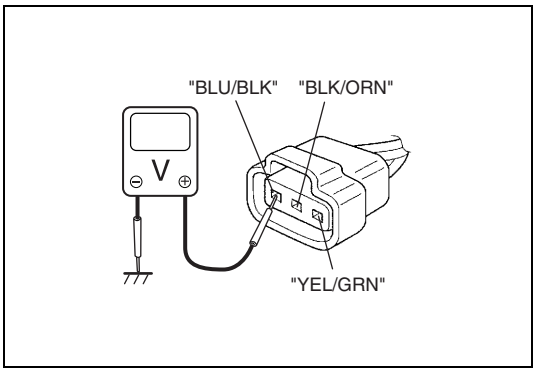

DTC P0505 Idle Air Control System

Wiring Diagram

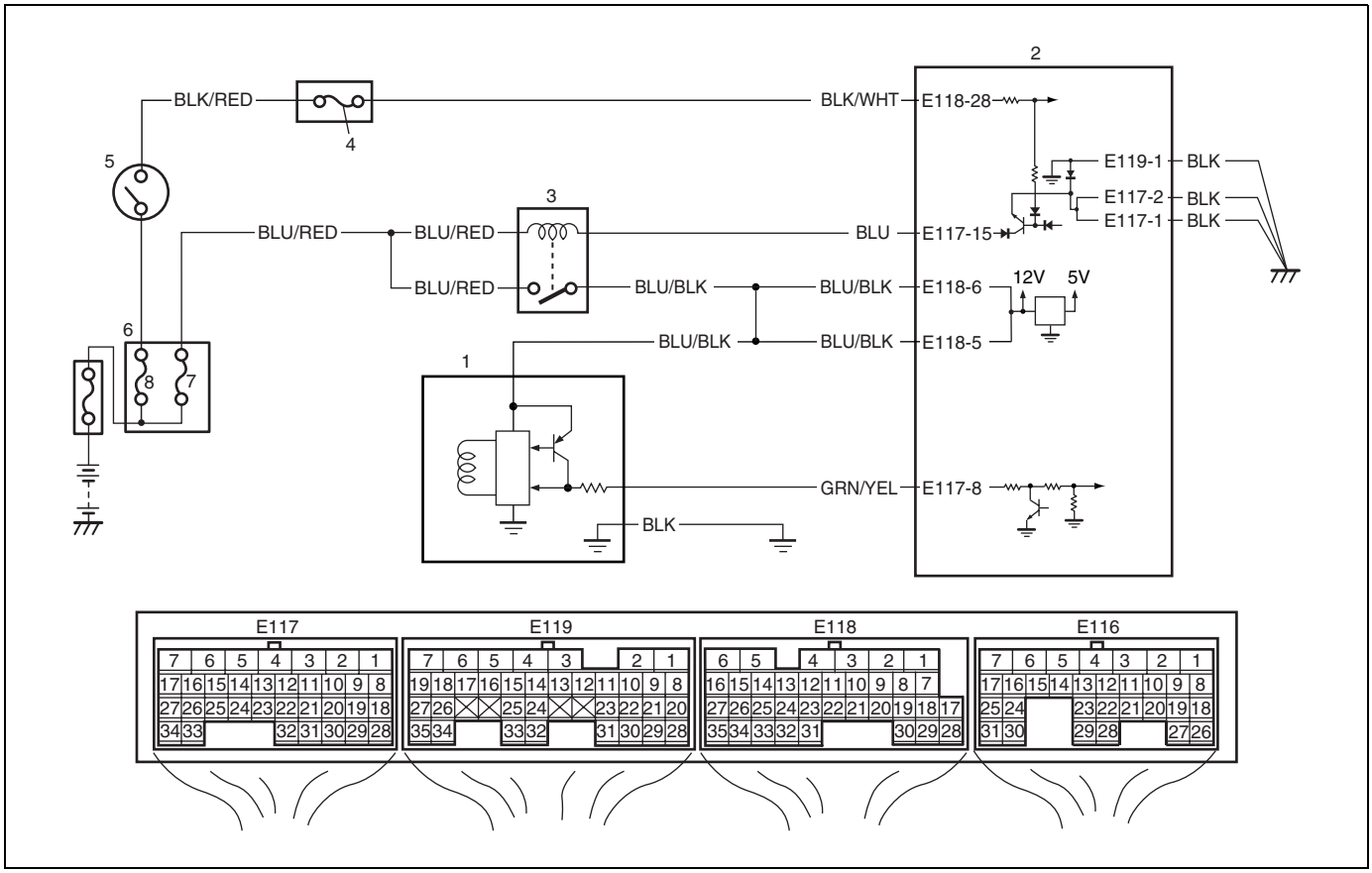

1. IAC valve	4. "IG" fuse	7. "FI" fuse
2. ECM	5. Ignition switch	8. "IGN1" fuse
3. Main relay	6. Relay box	

DTC Detecting Condition and Trouble Area

DTC detecting condition	Trouble area
IAC control duty pulse is not detected in its monitor signal. (2 driving cycle detection logic)	• Idle air control valve and / or its circuit • ECM

DTC Confirmation Procedure

1) With ignition switch turned OFF, connect scan tool.
2) Turn ON ignition switch and clear DTC using scan tool.
3) Run engine at idle speed (more than 600 rpm) for 1 min. or more.
4) Check DTC and pending DTC.

DTC Troubleshooting

Step	Action	Yes	No
1	Was “Engine and Emission Control System Check” performed?	Go to Step 2.	Go to “Engine and Emission Control System Check” in this section.
2	Idle speed check 1) Check idle speed / idle air control duty referring to “Idle Speed / Idle Air Control (IAC) Duty Inspection” in Section 6E. Is check result as specified?	Go to Step 3.	Go to Step 4.
3	Idle air control valve operation check 1) Check idle air control valve for operation referring to “Idle Air Control valve (IAC Valve)” in Section 6E. Is check result as specified?	Intermittent trouble. Check for intermittent referring to “Intermittent and Poor Connection” in Section 0A. If OK, substitute a known-good ECM and recheck.	Go to Step 4.
4	Idle air control valve circuit check 1) Disconnect connector from idle air control valve with ignition switch turned OFF. 2) Turn ON ignition switch, measure voltage between “BLU/BLK” wire terminal of idle air control valve connector and engine ground. Is voltage 10 – 14 V?	Go to Step 5.	“BLU/BLK” wire in open or high resistance circuit.
5	Idle air control valve circuit check 1) Disconnect connectors from ECM with ignition switch turned OFF. 2) Measure resistance between “GRN/YEL” wire terminal of idle air control valve connector and “E117-8” terminal of ECM connector. Is resistance 2 Ω or less?	Go to Step 6.	“GRN/YEL” wire in open or high resistance circuit.
6	Idle air control valve circuit check 1) Measure resistance between each “E117-8” terminal of ECM connector and vehicle body ground. Is resistance infinite?	Go to Step 7.	“GRN/YEL” wire in shorted to ground circuit.
7	Idle air control valve circuit check 1) Connect connectors to ECM. 2) Turn ON ignition switch, measure voltage between “E117-8” terminal of ECM connector and vehicle body ground. Is each voltage 0 V?	Go to Step 8.	“GRN/YEL” wire in shorted to power circuit.
8	Idle air control valve circuit check 1) Measure resistance between “BLK” wire terminal of IAC valve connector and vehicle body ground with ignition switch turned OFF. Is resistance continuity?	Go to Step 9.	“BLK” wire in open circuit.

Step	Action	Yes	No
9	Idle air control valve circuit check 1) Disconnect connectors from ECM. 2) Connect connector to IAC valve. 3) Using service wire, ground “E117-15” terminal of ECM connector because of main relay turned ON. 4) Measure voltage between “E117-8” terminal of ECM connector and vehicle body ground with ignition switch turned ON. Is voltage 10 – 14 V?	Substitute a known-good ECM and recheck.	Replace IAC valve.

NOTE:

Upon completion of inspection and repair work, perform “DTC Confirmation Procedure” and confirm that the trouble has been corrected.

DTC P0601 / P0602 Internal Control Module Memory Check Sum Error / Control Module Programming Error

System Description

Internal control module is installed in ECM.

DTC Detecting Condition and Trouble Area

DTC detecting condition	Trouble area
DTC P0601: Data write error or check sum error (1 driving cycle detection logic) DTC P0602: Data programming error (1 driving cycle detection logic)	ECM

DTC Confirmation Procedure

1) Connect scan tool to DLC with ignition switch OFF.
2) Turn ON ignition switch and clear DTC, pending DTC and freeze frame data by using scan tool.
3) Start engine and run it at idle if possible.
4) Check DTC and pending DTC by using scan tool.

DTC Troubleshooting

Step	Action	Yes	No
1	DTC recheck 1) Clear DTC referring to “Diagnostic Trouble Code (DTC) Clearance” in this section. 2) Turn OFF ignition switch. 3) Turn ON ignition switch and check DTC. Is DTC P0601 or P0602 still indicated?	Go to Step 2.	Intermittent trouble. Check for intermittent referring to “Intermittent and Poor Connection” in Section 0A.
2	ECM power and ground circuit check 1) Check that ECM power supply circuit and ECM ground circuit are in good condition referring to “Table A-3 ECM Power and Ground Circuit Check – MIL Doesn’t Light with Ignition Switch ON and Engine Doesn’t Start Though It Is Cranked Up” in this section. Are checking results OK?	Substitute a known-good ECM and recheck.	Repair ECM power or ground circuit.

NOTE:

Upon completion of inspection and repair work, perform “DTC Confirmation Procedure” and confirm that the trouble has been corrected.

DTC P0616 Starter Relay Circuit Low

Wiring Diagram

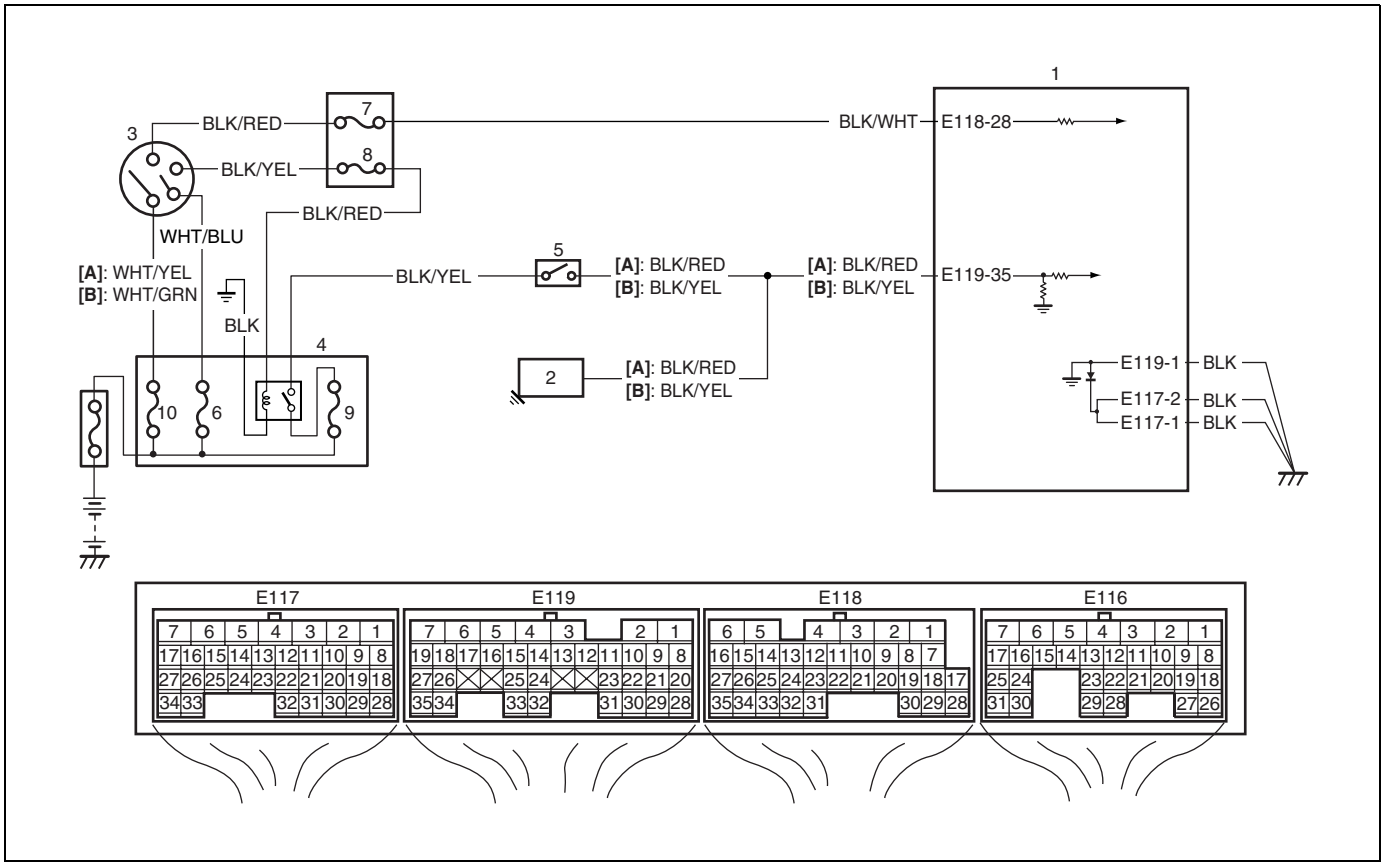

[A]: A/T vehicle	3. Ignition switch	7. "IG" fuse
[B]: M/T vehicle	4. Relay box	8. "ST" fuse in circuit fuse box
1. ECM	5. Transmission range switch (A/T vehicle)	9. "ST" fuse
2. Starter motor	6. "IGN2" fuse	10. "IGN1" fuse

DTC Detecting Condition and Trouble Area

DTC detecting condition	Trouble area
Engine starts even though vehicle is at stop and engine starter signal is low voltage. (2 driving cycle detection logic)	• Engine starter signal circuit • ECM

DTC Confirmation Procedure

1) With ignition switch turned OFF, connect scan tool.
2) Turn ON ignition switch and clear DTC using scan tool.
3) Start engine.
4) Check DTC and pending DTC.

DTC Troubleshooting

Step	Action	Yes	No
1	Was “Engine and Emission Control System Check” performed?	Go to Step 2.	Go to “Engine and Emission Control System Check” in this section.
2	Signal circuit check 1) Turn OFF ignition switch. 2) Measure voltage at terminal “E119-35” of ECM connector, under the following condition. **Voltage at terminal “E119-35” of ECM connector** **While engine cranking: 6 – 14 V** **After starting engine: 0 – 1 V** Is each voltage within specified?	Poor “E119-35” connection or intermittent trouble. Check for intermittent referring to “Intermittent and Poor Connection” in Section 0A. If wire and connections are OK, substitute a known-good ECM and recheck.	“BLK/RED” (A/T vehicle) or “BLK/YEL” (M/T vehicle) wire in open circuit or high resistance circuit.

NOTE:

Upon completion of inspection and repair work, perform “DTC Confirmation Procedure” and confirm that the trouble has been corrected.

DTC P0617 Starter Relay Circuit High

Wiring Diagram

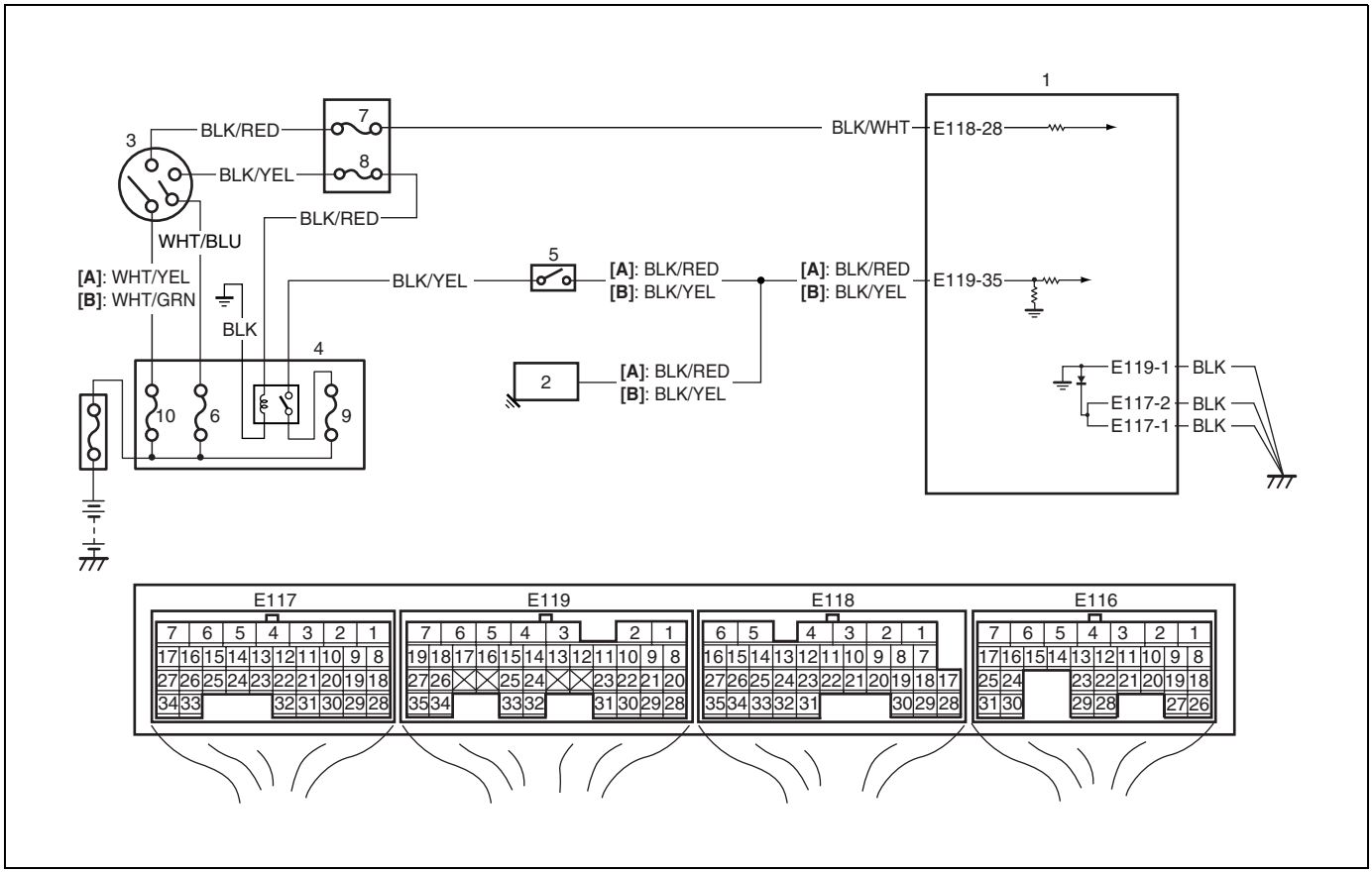

[A]: A/T vehicle	3. Ignition switch	7. "IG" fuse
[B]: M/T vehicle	4. Relay box	8. "ST" fuse in circuit fuse box
1. ECM	5. Transmission range switch (A/T vehicle)	9. "ST" fuse
2. Starter motor	6. "IGN2" fuse	10. "IGN1" fuse

DTC Detecting Condition and Trouble Area

DTC detecting condition	Trouble area
Engine starter signal is high voltage for 180 seconds continuously while engine is running. (2 driving cycle detection logic)	• Engine starter signal circuit • ECM

DTC Confirmation Procedure

1) With ignition switch turned OFF, connect scan tool.
2) Turn ON ignition switch and clear DTC using scan tool.
3) Start engine and run it at idle for 3 min. or more.
4) Check DTC and pending DTC.

DTC Troubleshooting

Step	Action	Yes	No
1	Was “Engine and Emission Control System Check” performed?	Go to Step 2.	Go to “Engine and Emission Control System Check” in this section.
2	Starter signal check 1) Start engine, measure voltage between “E119-35” terminal of ECM connector and vehicle body ground. Is voltage 0 – 1 V?	Intermittent trouble. Check for intermittent referring to “Intermittent and Poor Connection” in Section 0A. If OK, substitute a known-good ECM and recheck.	Go to Step 3.
3	Wire circuit check 1) Disconnect connector (1) from relay box with ignition switch turned OFF. See Fig. 1. 2) Check for proper connection to relay box at “BLK/YEL”, “BLK/RED” and “BLK” wire terminals. 3) Disconnect connectors from starting motor. 4) Measure voltage between “E119-35” terminal of ECM connector and vehicle body ground with ignition switch turned ON. Is voltage 0 – 1 V?	Go to Step 4.	For A/T vehicle, “BLK/YEL” or “BLK/RED” wire shorted to power circuit. For M/T vehicle, “BLK/YEL” wire shorted to power circuit. If wires are OK, substitute a known-good ECM and recheck.
4	Wire circuit check 1) Measure voltage between “BLK/RED” wire terminal of relay box connector and vehicle body ground with ignition switch turned ON. Is voltage 0 – 1 V?	Replace relay box. If OK, substitute a known-good ECM and recheck.	Faulty ignition switch, check ignition switch referring to “Ignition Switch” in Section 8. If ignition switch is OK, check “BLK/YEL” and/or “BLK/RED” wire (between ignition switch and relay box) for short to power circuit.

NOTE:

Upon completion of inspection and repair work, perform “DTC Confirmation Procedure” and confirm that the trouble has been corrected.

Fig. 1 for Step 3

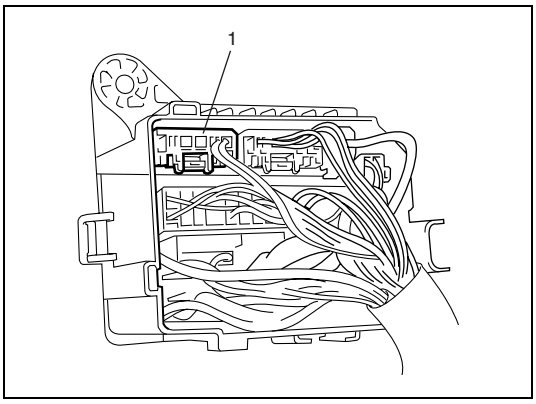

DTC P1510 ECM Back-Up Power Supply Malfunction

Wiring Diagram

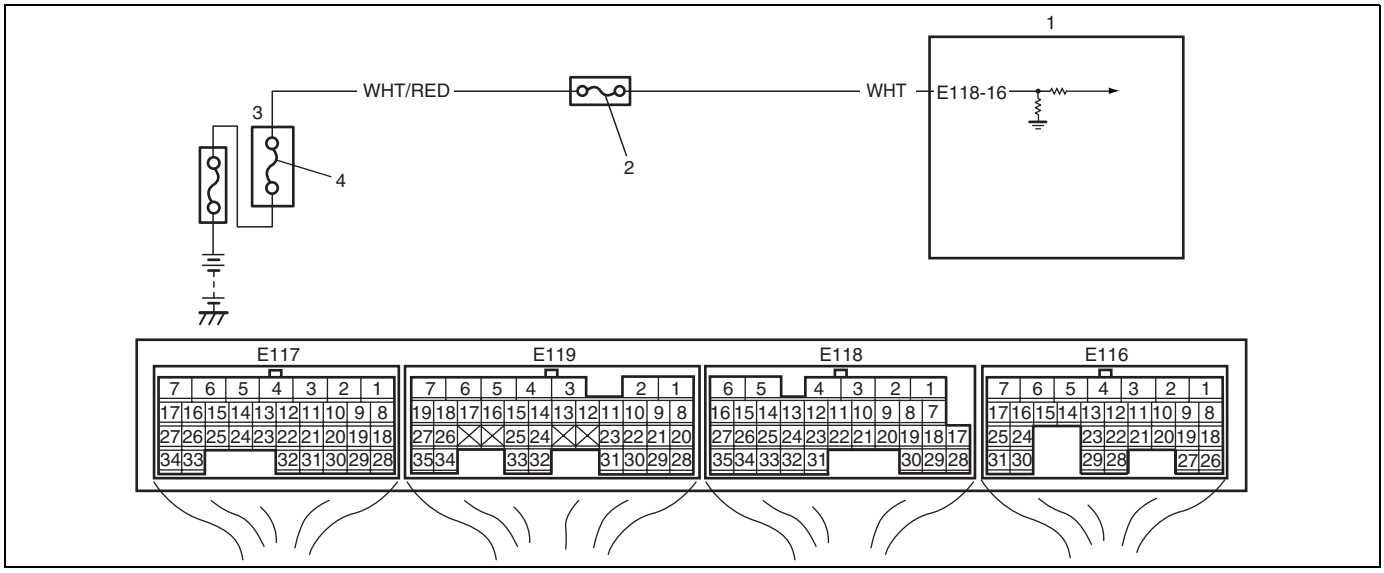

1. ECM	3. Relay box
2. “DOME” fuse	4. “LAMP” fuse

Circuit Description

Battery voltage is supplied so that DTC memory, values for engine control learned by ECM, etc. are kept in ECM even when the ignition switch is turned OFF.

DTC Detecting Condition and Trouble Area

DTC detecting condition	Trouble area
Back-up power circuit voltage is out of specification for 5 seconds continuously while engine running. (1 driving cycle detection logic)	Battery voltage supply circuit

DTC Confirmation Procedure

1) Connect scan tool to DLC with ignition switch turned OFF.
2) Turn ON ignition switch and clear DTC using scan tool and run engine at idle speed for 1 min.
3) Check DTC and pending DTC.

DTC Troubleshooting

Step	Action	Yes	No
1	Was “Engine and Emission Control System Check” performed?	Go to Step 2.	Go to “Engine and Emission Control System Check” in this section.
2	Battery voltage supply circuit check 1) While engine running, measure voltage between “E118-16” terminal of ECM connector and vehicle body ground. Is voltage 10 – 14 V?	Poor “E118-16” connection or intermittent trouble. Check for intermittent referring to “Intermittent and Poor Connection” in Section 0A. If wire and connections are OK, substitute a known-good ECM and recheck.	“DOME” fuse blown, “WHT” or “WHT/RED” wire circuit open or short.

NOTE:

Upon completion of inspection and repair work, perform "DTC Confirmation Procedure" and confirm that the trouble has been corrected.

DTC P1570 ABS Signal Circuit Malfunction

Wiring Diagram

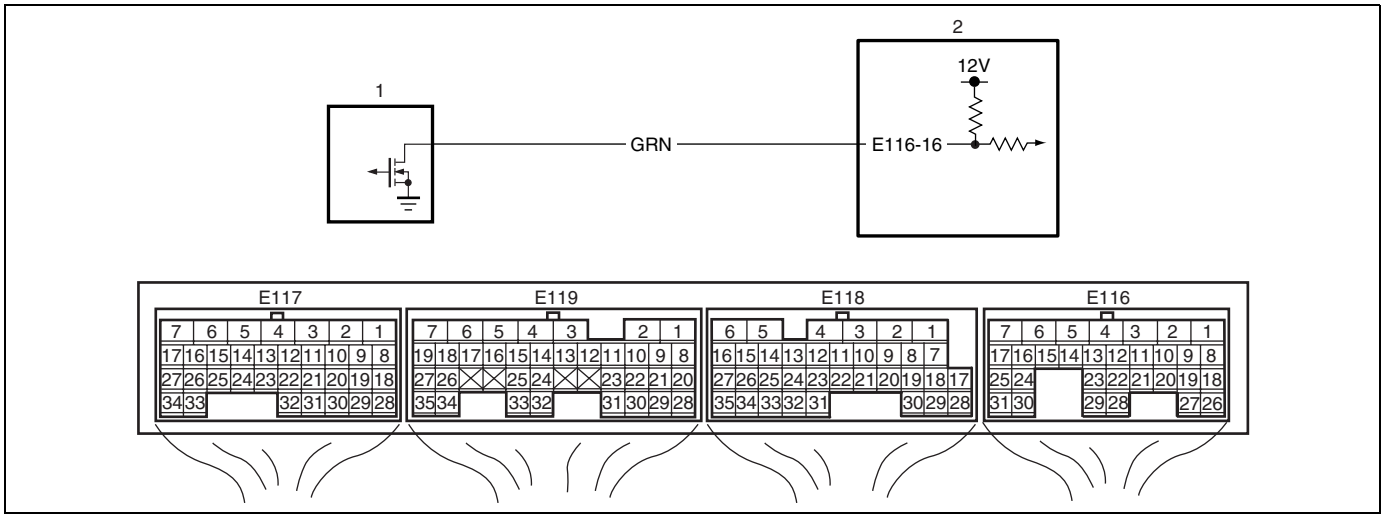

1. ABS control module	2. ECM

DTC Detecting Condition and Trouble Area

DTC Detecting Condition	Possible Cause
ABS signal input is low when engine start. (1 driving detection logic)	• ABS signal circuit short to ground • ABS control module • ECM

DTC Confirmation Procedure

1) Connect scan tool to DLC with ignition switch OFF.
2) Turn ON ignition switch and clear DTC by using scan tool.
3) Start engine and run it for 1 min. or more.
4) Check DTC and pending DTC.

DTC Troubleshooting

Step	Action	Yes	No
1	Was “Engine and Emission Control System Check” performed?	Go to Step 2.	Go to “Engine and Emission Control System Check” in this section.
2	ECM voltage check 1) With the ignition switch ON position, measure voltage between “E116-16” terminal of ECM coupler and vehicle body ground. Is voltage within 10 – 14 V?	Intermittent trouble. If OK, substitute a known-good ECM and recheck.	Go to Step 3.
3	Wire circuit check 1) Check “GRN” wire for shorted to ground circuit. Is “GRN” wire in good condition?	Go to Step 4.	Repair or replace.
4	DTC check 1) Disconnect coupler of ABS control module. 2) Clear DTC. 3) Start engine and check DTC. Is DTC P1570 detected?	Substitute a known-good ECM and recheck.	Substitute a known-good ABS control module and recheck.

NOTE:

Upon completion of inspection and repair work, perform "DTC Confirmation Procedure" and confirm that the trouble has been corrected.

DTC P1603 TCM Trouble Code Detected

Wiring Diagram

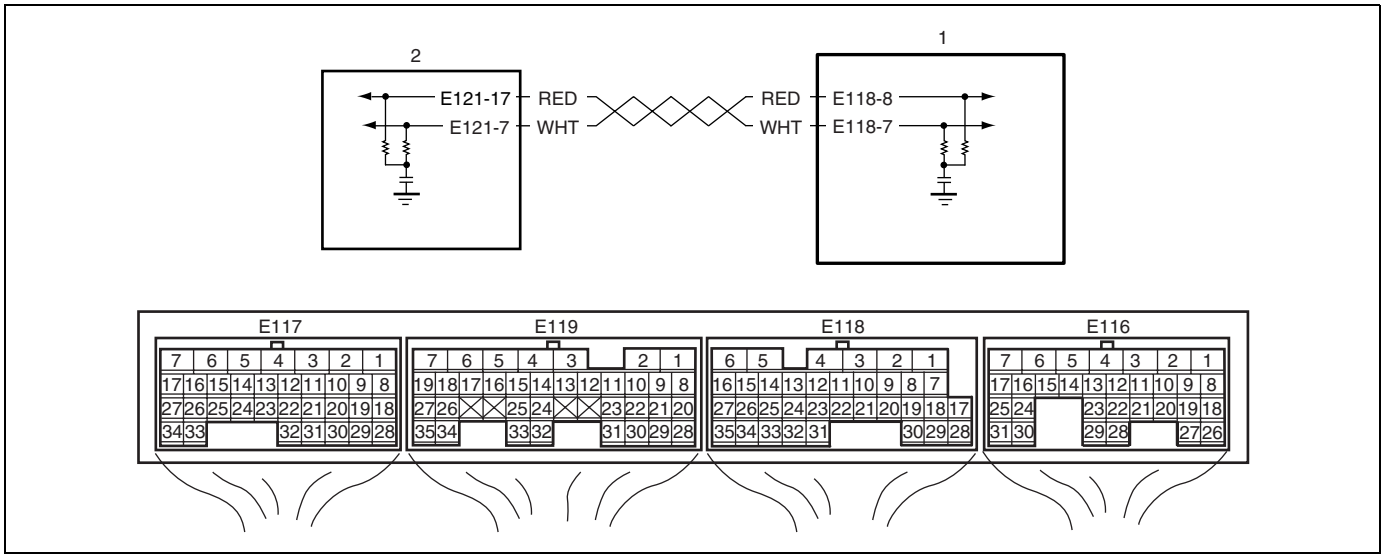

1. ECM	2. TCM (A/T vehicle)

DTC Detecting Condition

When ECM receives a trouble code from TCM, which indicates that some problem occurred in sensor circuits and its calculated values used for operations such as idle speed control, engine power control, and so on by TCM, ECM sets DTC P1603. (TCM outputs the trouble code to ECM when TCM can not compute the engine control signal due to malfunctions of sensor circuits used for gear shift control.)

DTC Troubleshooting

Step	Action	Yes	No
1	Was “Engine and Emission Control System Check” performed?	Go to Step 2.	Go to “Engine and Emission Control System Check” in this section.
2	DTC check 1) Check DTC of TCM referring to “Diagnostic Trouble Code (DTC) Check” in Section 7B. Is there any DTC(s)?	Go to applicable DTC diag. flow.	Substitute a known-good ECM and recheck.

NOTE:

Upon completion of inspection and repair work, perform “DTC Confirmation Procedure” and confirm that the trouble has been corrected.

DTC P1674 CAN Communication (Bus Off Error)

Wiring Diagram

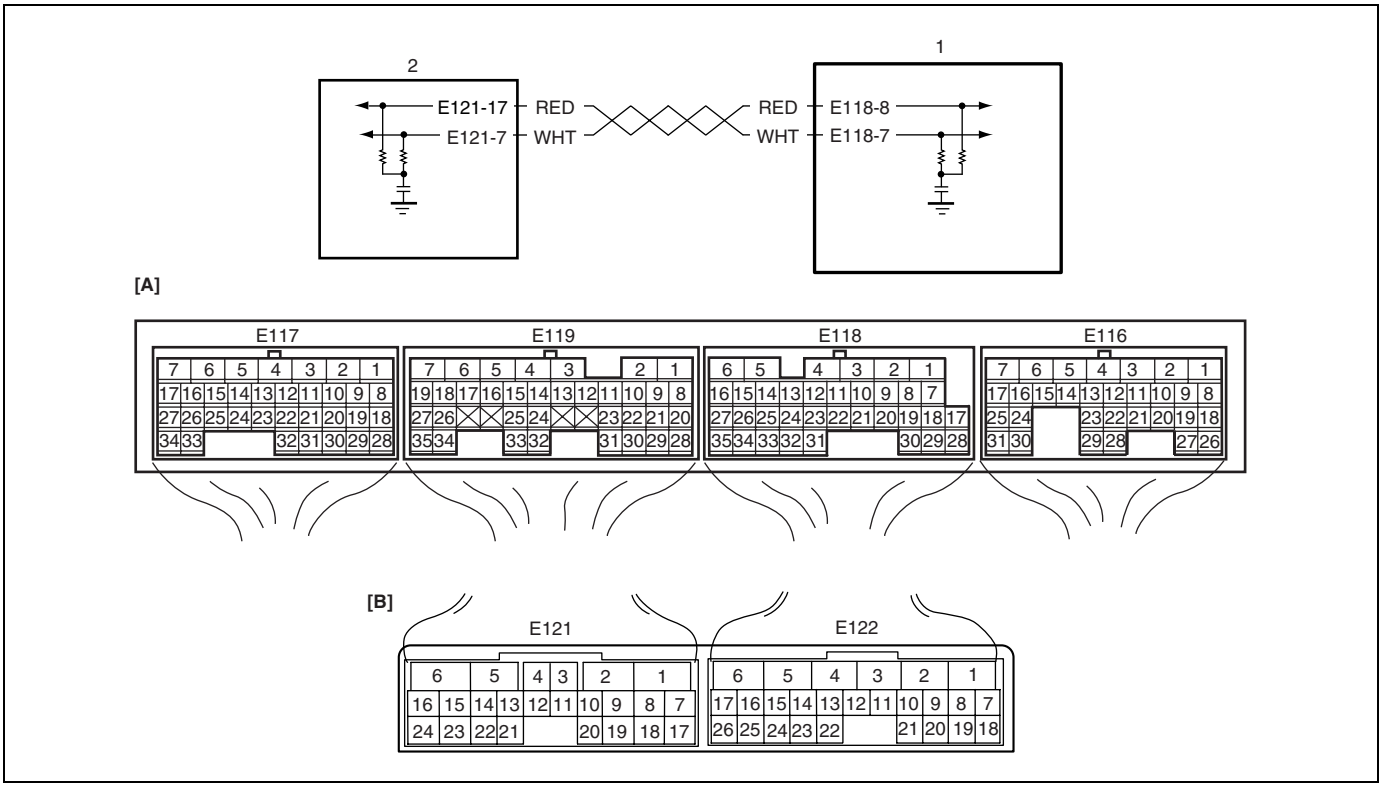

[A]: ECM connector (viewed from harness side)	1. ECM
[B]: TCM connector (viewed from harness side)	2. TCM

DTC Detecting Condition and Trouble Area

DTC detecting condition	Trouble area
Transmission error that is inconsistent between transmission data and transmission monitor (CAN bus monitor) data is detected more than 7 times continuously. (1 driving detection logic)	• ECM • TCM • CAN communication line circuit

DTC Confirmation Procedure

1) Connect scan tool to DLC with ignition switch OFF.
2) Turn ON ignition switch and clear DTC by using scan tool.
3) Start engine and run it for 1 min. or more.
4) Check DTC and pending DTC.

Troubleshooting

Step	Action	Yes	No
1	Was “Engine and Emission Control System Check” performed?	Go to Step 2.	Go to “Engine and Emission Control System Check” in this section.
2	DTC check 1) Connect scan tool to DLC with ignition switch turned OFF. 2) Check ECM and TCM for DTC. Is there any DTC(s) (other than DTC P1674, P1675, P1676 in ECM and DTC P1774, P1775, P1777 in TCM)?	Go to applicable DTC diag. flow.	Go to Step 3.
3	ECM and TCM connectors check 1) Check for proper connection at each ECM and TCM connector terminals with ignition switch turned OFF. 2) If connections are OK, recheck ECM for DTC with engine running. Is there DTC P1674?	Go to Step 4.	Intermittent trouble. Check for intermittent referring to “Intermittent and Poor Connection” in Section 0A.
4	ECM power and ground circuit check 1) Check for ECM power and ground circuit referring to “Table A-3 ECM Power and Ground Circuit Check – MIL Doesn’t Light with Ignition Switch ON and Engine Doesn’t Start Though It Is Cranked Up” in this section. Are they in good condition?	Go to Step 5.	Repair ECM power and/or ground circuits.
5	DTC check in TCM (bus off) 1) Check DTC in TCM. Is there DTC P1774 in TCM?	Go to Step 6.	Go to Step 7.
6	DTC check in ECM (bus off) 1) Disconnect connectors from ECM with ignition switch turned OFF. 2) Check TCM for DTC. Is there DTC P1774 in TCM?	Go to Step 7.	Substitute a known-good ECM and recheck.
7	DTC check in ECM 1) Connect connectors to ECM and disconnect connectors from TCM with ignition switch turned OFF. 2) Check ECM for DTC. Is there DTC P1674?	Go to Step 8.	Substitute a known-good TCM and recheck.
8	CAN communication line circuit insulation check 1) Disconnect connectors from ECM with ignition switch turned OFF. 2) Measure resistance between “E118-7” and “E118-8” terminals of ECM connector. Is resistance infinity?	Go to Step 9.	Repair insulation of CAN communication line circuit referring to “Precaution for CAN Communication System” in Section 0A.

Step	Action	Yes	No
9	CAN communication line circuit continuity check 1) Measure resistance at the following connector terminals. • Between “E118-8” terminal of ECM connector and “E121-17” terminal of TCM connector • Between “E118-7” terminal of ECM connector and “E121-7” terminal of TCM connector Is each resistance below 1 Ω?	Go to Step 10.	Repair open or high resistance of CAN communication line circuit referring to “Precaution for CAN Communication System” in Section 0A.
10	CAN communication line circuit ground short check 1) Measure resistance at the following connector terminals. • Between “E118-8” terminal of ECM connector and vehicle body ground • Between “E118-7” terminal of ECM connector and vehicle body ground Is each resistance infinity?	Go to Step 11.	Repair shorted to ground of CAN communication line circuit referring to “Precaution for CAN Communication System” in Section 0A.
11	Check for short circuit of CAN communication line to power circuit 1) Measure voltage at the following connector terminals with ignition switch turned ON. • Between “E118-8” terminal of ECM connector and vehicle body ground • Between “E118-7” terminal of ECM connector and vehicle body ground Is each voltage 0 – 1 V?	Substitute a known-good TCM and recheck. If DTC is still detected, substitute a known-good ECM and recheck.	Repair shorted to power supply of CAN communication line circuit referring to “Precaution for CAN Communication System” in Section 0A.

NOTE:

Upon completion of inspection and repair work, perform “DTC Confirmation Procedure” and confirm that the trouble has been corrected.

DTC P1675 CAN Communication (Transmission Error)

Wiring Diagram

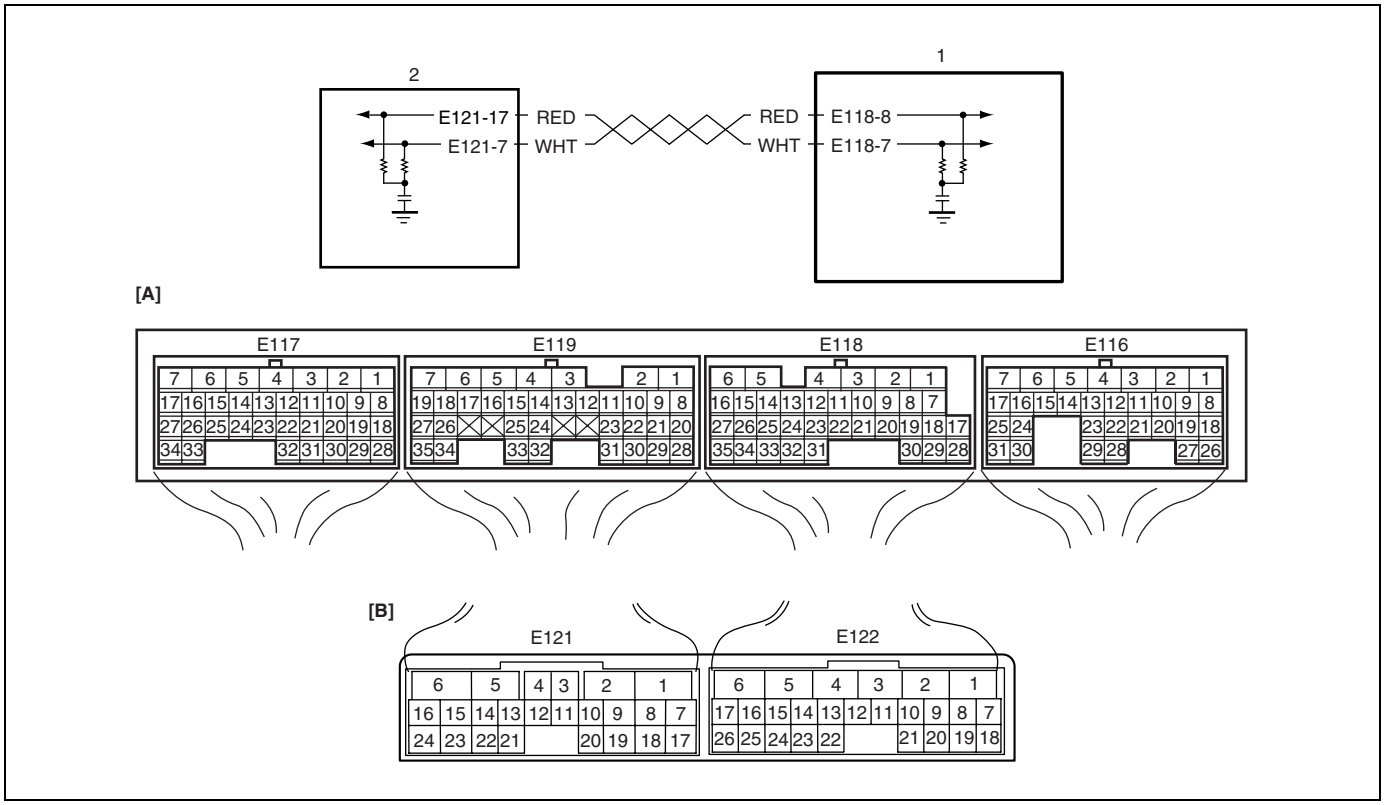

[A]: ECM connector (viewed from harness side)	1. ECM
[B]: TCM connector (viewed from harness side)	2. TCM

DTC Detecting Condition and Trouble Area

DTC detecting condition	Trouble area
Transmission error of communication data for ECM is detected for longer than specified time continuously. (1 driving detection logic)	• ECM • TCM • CAN communication line circuit

DTC Confirmation Procedure

1) Connect scan tool to DLC with ignition switch OFF.
2) Turn ON ignition switch and clear DTC by using scan tool.
3) Start engine and run it for 1 min. or more.
4) Check DTC and pending DTC.

Troubleshooting

Step	Action	Yes	No
1	Was “Engine and Emission Control System Check” performed?	Go to Step 2.	Go to “Engine and Emission Control System Check” in this section.

Step	Action	Yes	No
2	DTC check 1) Connect scan tool to DLC with ignition switch turned OFF. 2) Check ECM and TCM for DTC. Is there any DTC(s) (other than DTC P1674, P1675, P1676 in ECM and DTC P1774, P1775, P1777 in TCM)?	Go to applicable DTC diag. flow.	Go to Step 3.
3	CAN communication error check for ECM 1) Check ECM for DTC. Is there DTC P1674?	Go to "DTC P1674 CAN Communication (Bus Off Error)" in this section.	Go to Step 4.
4	CAN communication error check for TCM 1) Check TCM for DTC. Are there DTC P1774 in TCM?	Go to "DTC P1774 Control Module Communication Bus OFF" in Section 7B.	Go to Step 5.
5	ECM and TCM connectors check 1) Check for proper connection at each ECM and TCM connector terminals with ignition switch turned OFF. 2) If connections are OK, recheck ECM for DTC with engine running. Is there DTC P1675?	Go to Step 6.	Intermittent trouble. Check for intermittent referring to "intermittent and Poor Connection" in Section 0A.
6	ECM power and ground circuit check 1) Check for ECM power and ground circuits referring to "Table A-3 ECM Power and Ground Circuit Check – MIL Doesn't Light with Ignition Switch ON and Engine Doesn't Start Though It Is Cranked Up" in this section. Are they in good condition?	Go to Step 7.	Repair ECM power and/or ground circuits.
7	DTC check in ECM 1) Check ECM for DTC. Are there DTC P1676?	Go to Step 8.	Go to Step 9.
8	DTC check in TCM 1) Check TCM for DTC. Are there DTC P1777 in TCM?	Go to Step 9.	Substitute a known-good ECM and recheck.
9	CAN communication line circuit continuity check 1) Disconnect connectors from ECM and TCM with ignition switch turned OFF. 2) Measure resistance at the following connector terminals. • Between "E118-8" terminal of ECM connector and "E121-17" terminal of TCM connector • Between "E118-7" terminal of ECM connector and "E121-7" terminal of TCM connector Is each resistance below 1 Ω?	Go to Step 10.	Repair open or high resistance of CAN communication line circuit referring to "Precaution for CAN Communication System" in Section 0A.

Step	Action	Yes	No
10	CAN communication line circuit insulation check 1) Measure resistance at the following connector terminals. • Between “E118-8” and “E118-7” terminals of ECM connector Is each resistance infinity?	Go to Step 11.	Repair insulation of CAN communication line circuit referring to “Precaution for CAN Communication System” in Section 0A.
11	CAN communication line circuit ground short check 1) Measure resistance at the following connector terminals. • Between “E118-8” terminal of ECM connector and vehicle body ground • Between “E118-7” terminal of ECM connector and vehicle body ground Is each resistance infinity?	Go to Step 12.	Repair shorted to ground of CAN communication line circuit referring to “Precaution for CAN Communication System” in Section 0A.
12	Check for short circuit of CAN communication line to power circuit 1) Measure voltage at the following connector terminals with ignition switch turned ON. • Between “E118-8” terminal of ECM connector and vehicle body ground • Between “E118-7” terminal of ECM connector and vehicle body ground Is each voltage 0 – 1 V?	Substitute a known-good ECM and recheck.	Repair shorted to power supply of CAN communication line circuit referring to “Precaution for CAN Communication System” in Section 0A.

NOTE:

Upon completion of inspection and repair work, perform “DTC Confirmation Procedure” and confirm that the trouble has been corrected.

DTC P1676 CAN Communication (Reception Error for TCM)

Wiring Diagram

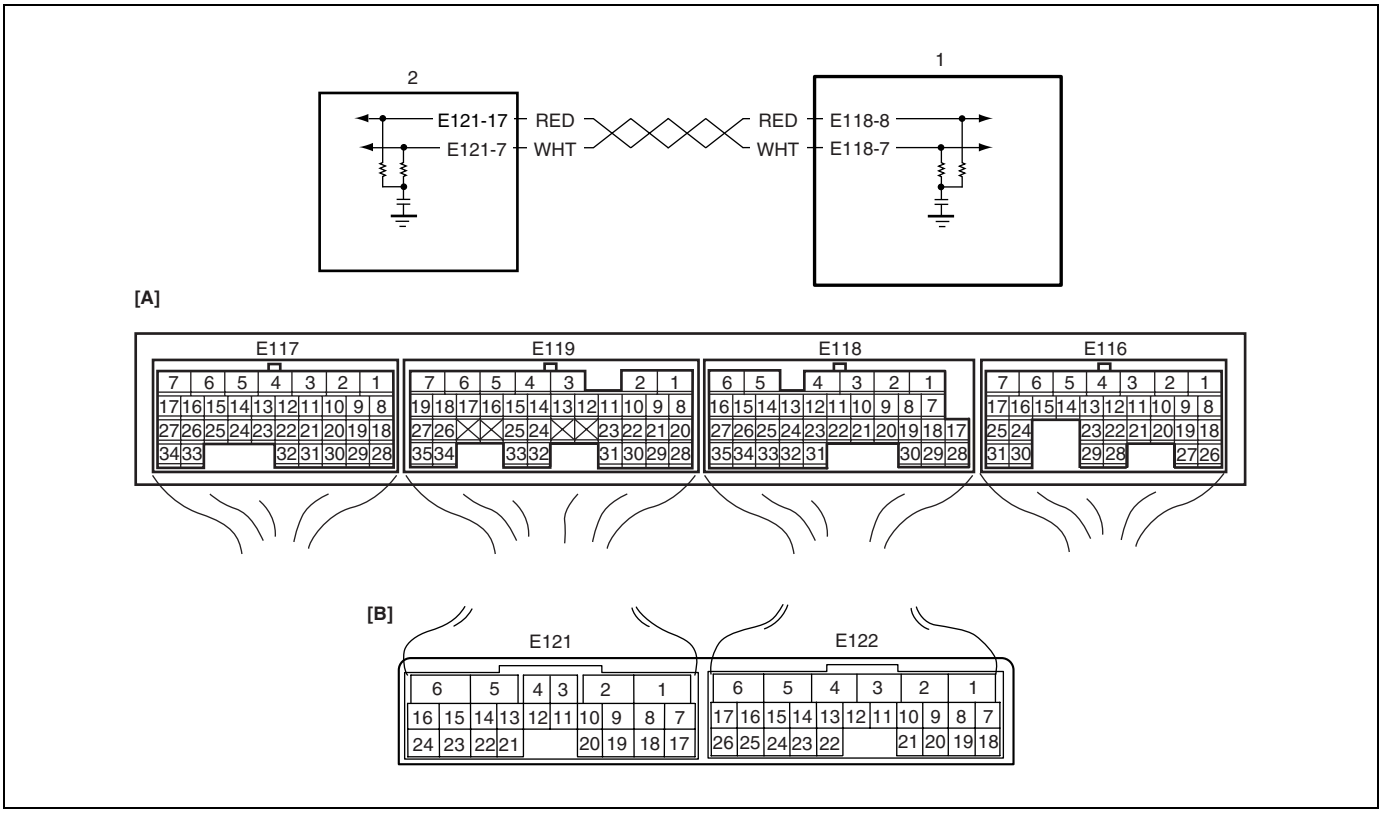

[A]: ECM connector (viewed from harness side)	1. ECM
[B]: TCM connector (viewed from harness side)	2. TCM

DTC Detecting Condition and Trouble Area

DTC detecting condition	Trouble area
Reception error of communication data for TCM is detected for longer than specified time continuously (1 driving detection logic)	• ECM • TCM • CAN communication line circuit

DTC Confirmation Procedure

1) Connect scan tool to DLC with ignition switch OFF.
2) Turn ON ignition switch and clear DTC by using scan tool.
3) Start engine and run it for 1 min. or more.
4) Check DTC and pending DTC.

Troubleshooting

Step	Action	Yes	No
1	Was “Engine and Emission Control System Check” performed?	Go to Step 2.	Go to “Engine and Emission Control System Check” in this section.

Step	Action	Yes	No
2	DTC check 1) Connect scan tool to DLC with ignition switch turned OFF. 2) Check ECM and TCM for DTC. Is there any DTC(s) (other than DTC P1674, P1675, P1676 in ECM and DTC P1774, P1775, P1777 in TCM)?	Go to applicable DTC diag. flow.	Go to Step 3.
3	Check CAN communication error check for ECM 1) Check ECM for DTC. Is there DTC P1674?	Go to "DTC P1674 CAN Communication (Bus Off Error)" in this section.	Go to Step 4.
4	ECM and TCM connector check 1) Check for proper connection at each ECM and TCM connector terminals with ignition switch turned OFF. 2) If connections are OK, recheck ECM for DTC with engine running. Is there DTC P1676?	Go to Step 5.	Intermittent trouble. Check for intermittent referring to "Intermittent and Poor Connection" in Section 0A.
5	ECM power and ground circuit check 1) Check for ECM power and ground circuits referring to "Table A-3 ECM Power and Ground Circuit Check – MIL Doesn't Light with Ignition Switch ON and Engine Doesn't Start Though It Is Cranked Up" in this section. Are they in good condition?	Go to Step 6.	Repair ECM power and/or ground circuits.
6	DTC check in TCM 1) Check DTC P1774 in TCM. Is it indicated?	Go to "DTC P1774 Control Module Communication Bus Off" in Section 7B.	Go to Step 7.
7	CAN communication line circuit continuity check 1) Disconnect connectors from ECM and TCM with ignition switch turned OFF. 2) Measure resistance at the following connector terminals. • Between "E118-8" terminal of ECM connector and "E121-17" terminal of TCM connector • Between "E118-7" terminal of ECM connector and "E121-7" terminal of TCM connector Is each resistance below 1 Ω?	Go to Step 8.	Repair open or high resistance CAN communication line circuit referring to "Precaution for CAN Communication System" in Section 0A
8	CAN communication line circuit insulation check 1) Measure resistance between "E118-8" and "E118-7" terminals of ECM connector. Is resistance infinity?	Go to Step 9.	Repair insulation of CAN communication line circuit referring to "Precaution for CAN Communication System" in Section 0A.

Step	Action	Yes	No
9	CAN communication line circuit ground short check 1) Measure resistance at the following connector terminals. • Between “E118-8” terminal of ECM connector and vehicle body ground • Between “E118-7” terminal of ECM connector and vehicle body ground Is each resistance infinity?	Go to Step 10.	Repair shorted to ground of CAN communication line circuit referring to “Precaution for CAN Communication System” in Section 0A.
10	Check for short circuit of CAN communication line to power circuit 1) Measure voltage at the following connector terminals with ignition switch turned ON. • Between “E118-8” terminal of ECM connector and vehicle body ground • Between “E118-7” terminal of ECM connector and vehicle body ground Is each voltage 0 – 1 V?	Substitute a known-good TCM and recheck. If DTC is still detected, substitute a known-good ECM and recheck.	Repair shorted to power supply of CAN communication line circuit referring to “Precaution for CAN Communication System” in Section 0A.

NOTE:

Upon completion of inspection and repair work, perform “DTC Confirmation Procedure” and confirm that the trouble has been corrected.

DTC P2227 / P2228 / P2229 Barometric Pressure Circuit Malfunction

DTC P2227 Barometric Pressure Circuit Range / Performance

DTC P2228 Barometric Pressure Circuit Low

DTC P2229 Barometric Pressure Circuit High

System Description

Barometric pressure sensor is installed in ECM.

DTC Detecting Condition and Trouble Area

DTC detecting condition	Trouble area
DTC P2227: Difference of barometric pressure value and intake manifold pressure value is higher than specified value while engine cranking. (2 driving cycle detection logic)	• Manifold absolute pressure sensor performance problem • Barometric pressure sensor in ECM
DTC P2228: Barometric pressure signal less than specified value is detected. (1 driving cycle detection logic)	• Barometric pressure sensor in ECM
DTC P2229: Barometric pressure signal more than specified value is detected. (1 driving cycle detection logic)	

DTC Confirmation Procedure

DTC P2227:

1) Connect scan tool to DLC with ignition switch OFF.
2) Turn ON ignition switch and clear DTC, pending DTC and freeze frame data by using scan tool and warm up engine to normal operating temperature.
3) Check DTC and pending DTC by using scan tool.

1)

DTC P2228 / P2229:

1) Connect scan tool to DLC with ignition switch OFF.
2) Turn ON ignition switch and clear DTC by using scan tool and run engine for 1 min.
3) Check DTC and pending DTC by using scan tool.

DTC Troubleshooting

Step	Action	Yes	No
1	Was “Engine and Emission Control System Check” performed?	Go to Step 2.	Go to “Engine and Emission Control System Check” in this section.
2	Is DTC P2227 set?	Go to Step 3.	Substitute a known-good ECM and recheck.
3	MAP sensor check 1) Check MAP sensor and its circuit referring to “DTC P0107 Manifold Absolute Pressure Circuit Low Input” and/or “DTC P0108 Manifold Absolute Pressure Circuit High Input” in this section. Is check result satisfactory?	Substitute a known-good ECM and recheck.	MAP sensor or its circuit malfunction.

NOTE:

Upon completion of inspection and repair work, perform "DTC Confirmation Procedure" and confirm that the trouble has been corrected.

Table B-1 Fuel Injector Circuit Check

Wiring Diagram

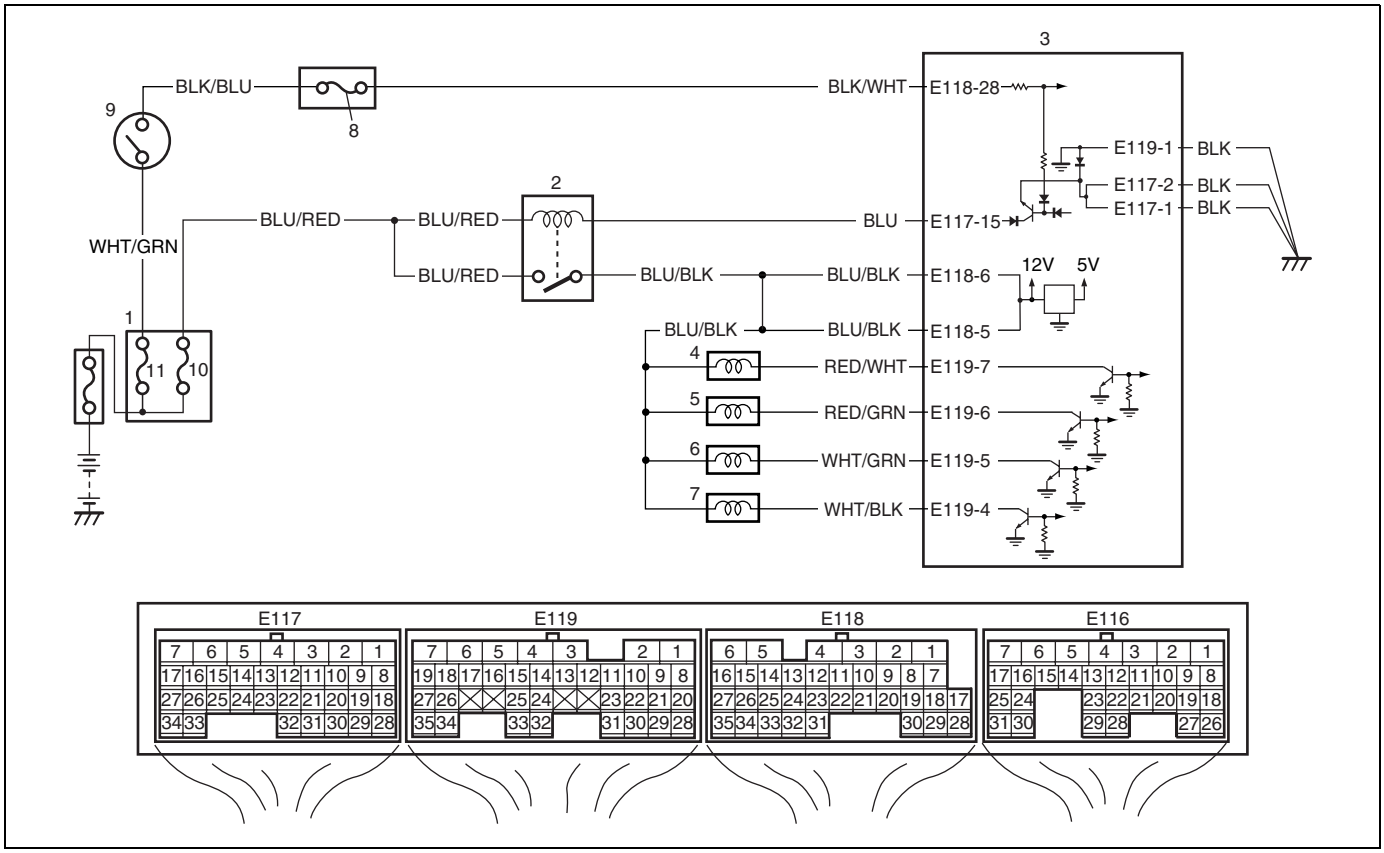

1. Relay box	4. No.1 injector	7. No.4 injector	10. "FI" fuse
2. Main relay	5. No.2 injector	8. "IG" fuse	11. "IGN1" fuse
3. ECM	6. No.3 injector	9. Ignition switch	

Troubleshooting

Step	Action	Yes	No
1	Fuel injector check for operating sound 1) Using sound scope, check each injector for operating sound at engine cranking. Do all 4 injector make operating sound?	Furl injector circuit is in good condition.	Go to Step 2.
2	Fuel injector resistance check 1) Disconnect connectors from fuel injectors with ignition switch turn OFF. 2) Check for proper connection to fuel injector at each terminals. 3) If OK, check all 4 fuel injectors for resistance referring to "Fuel Injector" in Section 6E. Are all injectors in good condition?	Go to Step 3.	Faulty fuel injector.
3	Fuel injector insulation resistance check 1) Check that there is insulating between each fuel injector terminals and engine ground. Is there insulating?	Go to Step 4.	Faulty fuel injector.

Step	Action	Yes	No
4	Fuel injector power supply check 1) Measure voltage between each “BLU/BLK” wire terminal of fuel injector connector and engine ground with ignition switch turned ON. Is voltage 10 – 14 V?	Go to Step 5.	“BLU/BLK” wire in open circuit or shorted to ground circuit. If it is in good condition, go to “Table A-3 ECM Power and Ground Circuit Check – MIL Doesn’t Light with Ignition Switch ON and Engine Doesn’t Start Though It Is Cranked Up” in this section.
5	Wire circuit check 1) Turn OFF ignition switch. 2) Disconnect connectors from ECM. 3) Measure resistance between each “RED/WHT”, “RED/GRN”, “WHT/GRN”, “WHT/BLK” wire terminal of fuel injector connector and vehicle body ground. Is resistance infinity?	Go to Step 6.	“RED/WHT”, “RED/GRN”, “WHT/GRN”, “WHT/BLK” wire shorted to ground.
6	Wire circuit check 1) Measure voltage between each “RED/WHT”, “RED/GRN”, “WHT/GRN”, “WHT/BLK” wire terminal of fuel injector connector and vehicle body ground with ignition switch turned ON. Is voltage 0 V?	Go to Step 7.	“RED/WHT”, “RED/GRN”, “WHT/GRN”, “WHT/BLK” wire shorted to power supply circuit.
7	Fuel injector drive signal check 1) Connect connectors to each fuel injectors and ECM with ignition switch turned OFF. 2) Turn ON ignition switch. 3) Measure voltage between each “E119-7”, “E119-6”, “E119-5”, “E119-4” terminal of ECM connector and vehicle body ground. Is voltage 10 – 14 V?	Check fuel injector referring to “Fuel Injector Inspection” in Section 6E. If result in good condition, substitute a known-good ECM and recheck.	“RED/WHT”, “RED/GRN”, “WHT/GRN”, “WHT/BLK” open circuit.

Table B-2 Fuel Pump and Its Circuit Check

Wiring Diagram

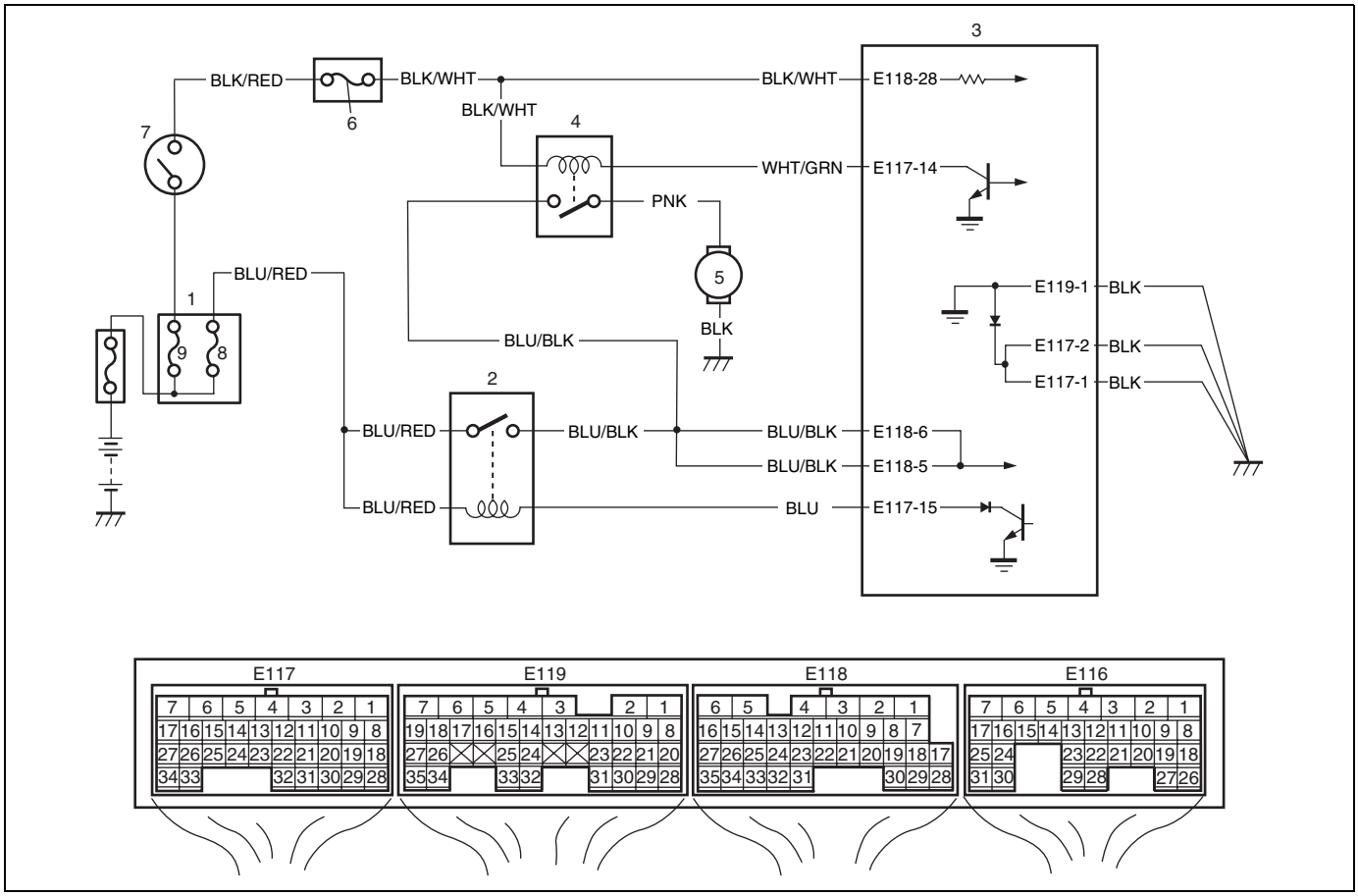

1. Relay box	4. Fuel pump relay	7. Ignition switch
2. Main relay	5. Fuel pump	8. "FI" fuse
3. ECM	6. "IG" fuse	9. "IGN1" fuse

Troubleshooting

Step	Action	Yes	No
1	Fuel pump control system check for operation Is fuel pump heard to operate for 2 sec. after ignition switch ON? See Fig. 1.	Fuel pump circuit is in good condition.	Go to Step 2.
2	Fuel pump relay power supply check 1) Disconnect fuel pump relay from relay box with ignition switch turned OFF. 2) Check for proper connection to fuel pump relay at each terminals. 3) If OK, turn ON ignition switch, measure voltage between "BLK/WHT" wire terminal of fuel pump relay connector and engine ground. Is voltage 10 – 14 V?	Go to Step 3.	"BLK/WHT" wire open or shorted to ground circuit.

Step	Action	Yes	No
3	Fuel pump relay power supply check 1) Turn ON ignition switch, measure voltage between “BLU/BLK” wire terminal of fuel pump relay connector and engine ground. Is voltage 10 – 14 V?	Go to Step 4.	“BLU/BLK” wire open circuit.
4	Fuel pump relay check 1) Check fuel pump relay referring to “Main Relay, Fuel Pump Relay, A/C Compressor Relay and A/C Condenser Fan Relay” in Section 6E. Is relay in good condition?	Go to Step 5.	Faulty relay.
5	Fuel pump relay drive signal check 1) Connect fuel pump relay to relay box. 2) Connect voltmeter between “E117-14” terminal of ECM connector and vehicle body ground. 3) Measure voltage at after 2 second ignition switch turned ON. Is voltage 10 – 14 V?	Go to Step 6.	“WHT/GRN” wire open circuit or shorted to ground circuit.
6	Fuel pump relay drive signal check 1) Measure voltage at within 2 second after ignition switch turned ON. Is voltage 0 – 1 V?	Go to Step 7.	Substitute a known-good ECM and recheck.
7	Wire circuit check 1) Turn OFF ignition switch. 2) Detach fuel tank referring to “Fuel Tank” in Section 6C. 3) Disconnect connector from fuel pump. 4) Measure resistance between “PNK” wire terminal of fuel pump connector and vehicle body ground. Is resistance infinity?	Go to Step 8.	“PNK” wire shorted to ground.
8	Fuel pump circuit check 1) Turn OFF ignition switch. 2) Connect service wire between “E117-14” terminal of ECM connector and vehicle body ground. 3) Turn ON ignition switch, measure voltage between “PNK” terminal at fuel pump connector and vehicle body ground. Is voltage 10 – 14 V?	Go to Step 9.	“PNK” wire open circuit.
9	Fuel pump circuit check 1) Turn OFF ignition switch. 2) Measure resistance between “BLK” wire terminal at fuel pump connector and vehicle body ground. Is it resistance less than 5 Ω?	Faulty fuel pump.	“BLK” wire open circuit.

Fig. 1 for Step 1

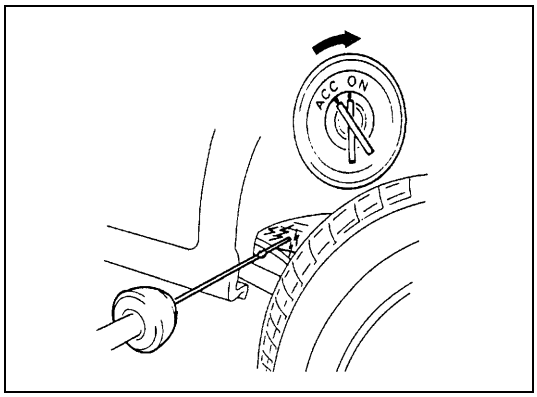

Table B-3 Fuel Pressure Check

System Diagram

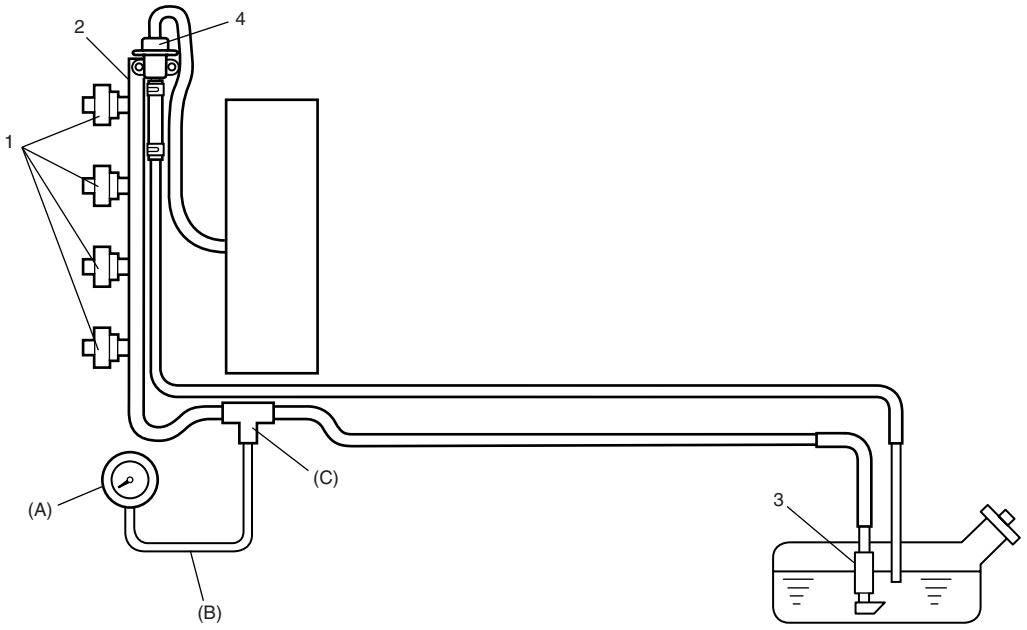

1. Injector	(A): Fuel pressure gauge 09912-58442
2. Delivery pipe	(B): Hose 09912-58432
3. Fuel filter and fuel pump	(C): Attachment 09912-58490
4. Fuel pressure regulator	

Troubleshooting

NOTE:

Before using the following flow, check to make sure that battery voltage is higher than 11 V. If battery voltage is low, pressure becomes lower than specification even if fuel pump and line are in good condition.

Step	Action	Yes	No
1	Fuel pressure check 1) Check fuel pressure referring to “Fuel Pressure Inspection” in Section 6E. Are they satisfied each condition?	Go to Step 2.	Go to Step 5.
2	Fuel pressure check 1) Start engine and warm it up to normal operating temperature. 2) Keep engine speed to 4000 rpm. Does fuel pressure shows the value which is about the same as Step 1?	Go to Step 3.	Go to Step 8.
3	Fuel line check 1) Check fuel pipe, fuel hose and joint for fuel leakage. Are they in good condition?	Go to Step 4.	Repair or replace.

Step	Action	Yes	No
4	Fuel line check 1) Check fuel pipe, fuel hose and joint for damage or deform. Are they in good condition?	Faulty fuel pressure regulator.	Repair or replace.
5	Was fuel pressure higher than specification in Step 1?	Go to Step 6.	Go to Step 7.
6	Fuel line check 1) Check fuel pipe, fuel hose and joint for damage or deform. Are they in good condition?	Faulty fuel pressure regulator.	Repair or replace.
7	Fuel pump operating sound check 1) Remove fuel filler cap and then turn ON ignition switch. Can you hear operation sound?	Go to Step 8.	Faulty fuel pump.
8	Fuel line check 1) Check fuel pipe, fuel hose and joint for damage or deform. Are they in good condition?	Clogged fuel filter, faulty fuel pump, faulty fuel pressure regulator or fuel leakage from hose connection in fuel tank.	Repair or replace.

Table B-4 Idle Air Control System Check

Wiring Diagram

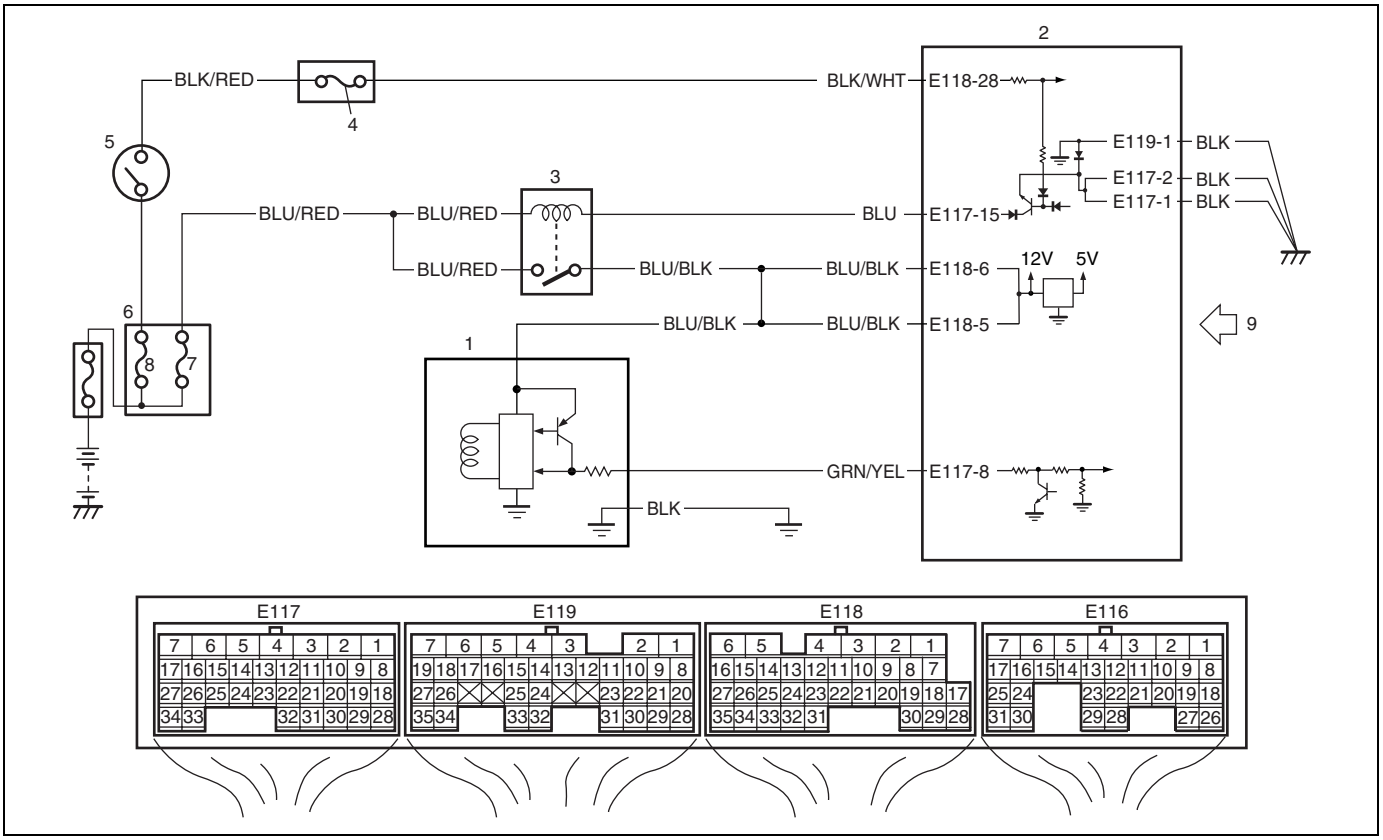

1. IAC valve	4. "IG" fuse	7. "FI" fuse
2. ECM	5. Ignition switch	8. "IGN1" fuse
3. Main relay	6. Relay box	9. A/C signal and head light signal

Troubleshooting

Step	Action	Yes	No
1	1) Check engine idle speed and IAC duty referring to "Idle Speed / Idle Air Control (IAC) Duty Inspection" in Section 6E. Is idle speed within specification?	Go to Step 2.	Go to Step 4.
2	Is IAC duty within specification in Step 1?	Go to Step 3.	Check for the followings: • Vacuum leak • EVAP canister purge control system • Clog of IAC air passage • Accessory engine load • "Table B-6 Electric Load Signal Circuit Check" in this section • Closed throttle position (TP sensor) • Stuck of PCV valve
3	Is engine idle speed kept specified speed even with headlight ON?	System is in good condition.	Go to Step 6.

Step	Action	Yes	No
4	Was idle speed higher than specification in Step 1?	Go to Step 5.	Go to Step 6.
5	A/C signal circuit check 1) Check A/C signal circuit referring to Step 2 of "Table B-5 A/C System Circuit Check" in this section Is it in good condition?	Go to Step 6.	Repair or replace A/C signal circuit or A/C system.
6	Idle air control system check [Using SUZUKI scan tool] 1) Connect SUZUKI scan tool to DLC with ignition switch OFF, set parking brake and block drive wheels. 2) Warm up engine to normal operating temperature. 3) Clear DTC and select "MISC TEST" mode on SUZUKI scan tool. Is it possible to control (increase and reduce) engine idle speed by using SUZUKI scan tool? [Not using SUZUKI scan tool] 1) Remove IAC valve from throttle boy referring to "Idle Air Control Valve (IAC Valve)" in Section 6E. 2) Check IAC valve for operation referring to "Idle Air Control Valve (IAC Valve)" in Section 6E. Is check result satisfactory?	Go to Step 7.	Go to Step 8.
7	Was IAC duty less than about 3% (or more than about 97% for OFF duty meter) in Step 1 of this table?	Check abnormal air inhaling from air intake system, PCV valve and EVAP canister purge control system.	Check TP sensor (closed throttle position) and ECT sensor for performance. If sensors are OK, substitute a known-good ECM.
8	Wire harness check 1) Check that IAC valve circuit is in good condition referring to Step 4 to 9 of "DTC P0505 Idle Air Control System" in this section. Is circuit in good condition?	Go to Step 9.	Repair or replace IAC valve circuit.
9	IAC valve signal check 1) Connect IAC valve and ECM connectors with ignition switch turned OFF. 2) Using oscilloscope, check IAC valve signal referring to "Reference waveform No.23" and "Reference waveform No.24" under "Inspection of ECM and Its Circuits" in this section. Is duty pulse outputted as reference waveform No.23 and No.24 at "E117-8" of ECM terminal?	Replace IAC valve.	Substitute a known-good ECM and recheck.

Table B-5 A/C System Circuit Check

Wiring Diagram

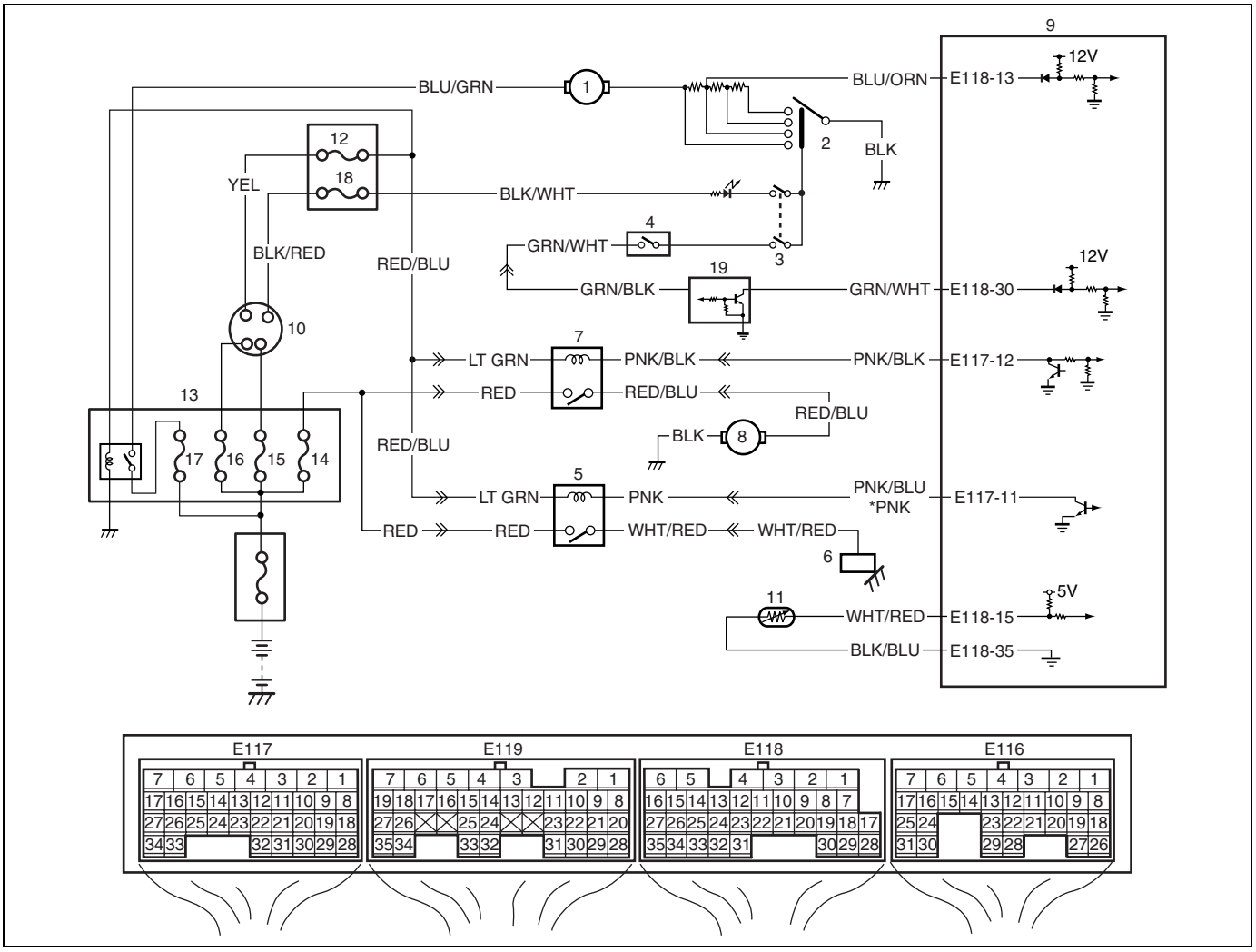

1. Blower fan motor	6. A/C compressor	11. Evaporator temp. sensor	16. “IGN2” fuse
2. Blower fan switch	7. A/C condenser fan control relay	12. “IG2 SIG” fuse	17. “HTR” fuse
3. A/C switch	8. A/C Condenser fan motor	13. Relay box	18. “IG” fuse
4. A/C refrigerant pressure switch	9. ECM	14. “A/C” fuse	19. 4WD controller
5. Compressor relay	10. Ignition switch	15. “IGN1” fuse	*: Right-hand steering vehicle

Troubleshooting

WARNING:
Keep hands, tools, and clothing away from A/C condenser fan to help prevent personal injury. This fan is electric and can come on whether or not the engine is running. The fan can start automatically in response to the ECT sensor with the ignition switch in the "ON" position.

Step	Action	Yes	No
1	A/C evaporator temp. sensor check 1) Disconnect connectors from ECM with ignition switch turned OFF. 2) Check for proper connection to "E118-15" and "E118-35" terminals of ECM connector. 3) If OK, measure resistance between "E118-15" and "E118-35" terminals of ECM connector. See Fig. 1. **Evaporator temp. sensor resistance** **At 0 °C: 6.3 – 6.9 kΩ** **At 25 °C: 1.8 – 2.2 kΩ** Is it within specification?	Go to Step 2.	Faulty A/C evaporator temp. sensor or its circuit.
2	A/C refrigerant pressure switch signal check 1) Connect connectors to ECM with ignition switch turned OFF. 2) Measure voltage between "E118-30" terminal of ECM connector and vehicle body ground under each condition given below. **A/C refrigerant pressure switch signal** **Ignition switch ON, blower fan switch and A/C switch ON: 0 – 1 V** **Ignition switch ON and A/C switch OFF: 10 – 14 V** Is each voltage within specified value?	Go to Step 3.	"GRN/WHT" or "GRN/BLK" wire in open circuit in shorted to other circuit. If wires are OK, faulty A/C refrigerant pressure switch, improper refrigerant amount or 4WD controller.
3	A/C condenser fan control system check Is A/C condenser fan started when A/C and blower fan switch turned ON while engine running?	Go to Step 4.	Go to Step 5.
4	A/C condenser fan control system check 1) Connect scan tool to DLC with ignition switch turned OFF. 2) Start engine and select "Data List" mode on scan tool. 3) Warm up engine until engine coolant temperature is 110 °C, 230 °F or higher and A/C switch OFF. (If engine coolant temperature does not rise, check engine cooling system or ECT sensor.) Is A/C condenser fan started when engine coolant temperature reached above temperature?	Go to Step 13.	Go to Step 5.

Step	Action	Yes	No
5	Is there DTC(s) ECT sensor circuit (DTC P0116/ P0117/P0118) and/or A/C condenser fan circuit (DTC P0481)?	Go to corresponding DTC flow.	Go to Step 6.
6	A/C fuse check 1) Turn OFF ignition switch. 2) Check for fuse blown at “A/C” fuse in relay box. Is “A/C” fuse in good condition?	Go to Step 7.	Replace “A/C” fuse and check for short.
7	A/C condenser fan control relay circuit check 1) Remove A/C condenser fan control relay. 2) Check for proper connection to A/C condenser fan control relay at “RED” and “RED/ BLU” wire terminals. 3) If OK, measure voltage between “RED” wire terminal of A/C condenser fan control relay connector and vehicle body ground. Is voltage 10 – 14 V?	Go to Step 8.	“RED” wire in open or high resistance circuit.
8	A/C condenser fan control relay circuit check 1) Disconnect connector from A/C condenser fan motor with ignition switch turned OFF. 2) Check for proper connection to A/C condenser fan motor at “RED/BLU” and “BLK” wire terminals. 3) Measure resistance between “RED/BLU” wire terminal of A/C condenser fan motor and vehicle body ground. Is resistance infinity?	Go to Step 9.	“RED/BLU” wire shorted to ground circuit.
9	A/C condenser fan control relay circuit check 1) Measure voltage between “RED/BLU” wire terminal of A/C condenser fan motor and vehicle body ground with ignition switch turned ON. Is voltage 0 V?	Go to Step 10.	“RED/BLU” wire shorted to power supply circuit.
10	A/C condenser fan control relay circuit check 1) Connect A/C condenser fan control relay to relay box with ignition switch turned OFF. 2) Measure voltage between “RED/BLU” wire terminal of A/C condenser fan motor and vehicle body ground with ignition switch turned ON. Is voltage 10 – 14 V?	Go to Step 12.	Go to Step 11.
11	A/C condenser fan control relay check 1) Check A/C condenser fan control relay referring to “Main Relay, Fuel Pump Relay, A/C Compressor Relay and A/C Condenser Fan Control Relay” in Section 6E. Is check result satisfactory?	“RED/BLU” wire in open or high resistance circuit.	Replace A/C condenser fan control relay.

Step	Action	Yes	No
12	A/C condenser fan motor check 1) Check A/C condenser fan motor referring to "A/C Condenser Fan" in Section 6E. Is check result satisfactory?	"BLK" wire in open or high resistance circuit.	Replace A/C condenser fan motor.
13	A/C compressor control system check Is A/C compressor started when A/C and blower fan switch turned ON while engine running?	A/C system is in good condition.	Go to Step 14.
14	A/C compressor relay circuit check 1) Measure voltage between "E117-11" terminal of ECM connector and vehicle body ground under the following condition. **Voltage between "E117-11" terminal of ECM connector and ground** **While engine running and A/C switch OFF: 10 – 14 V** **While engine running, A/C and blower fan selector switch ON: 0 – 1 V** Are check result satisfactory?	Go to Step 15.	Go to Step 16.
15	A/C compressor relay check 1) Check A/C compressor relay referring to "Main Relay, Fuel Pump Relay, A/C Compressor Relay and A/C Condenser Fan Control Relay" in Section 6E. Is it in good condition?	A/C compressor drive circuit malfunction.	Replace A/C compressor relay.
16	A/C compressor relay circuit check 1) Remove A/C compressor relay with ignition switch turned OFF. 2) Turn ON ignition switch, measure voltage between "LT GRN" wire terminal of A/C compressor relay connector and vehicle body ground. Is voltage 10 -14 V?	Go to Step 17.	"LT GRN" and/or "RED/BLU" wire in open circuit.
17	A/C compressor relay check 1) Check A/C compressor relay referring to "Main Relay, Fuel Pump Relay, A/C Compressor Relay and A/C Condenser Fan Control Relay" in Section 6E. Is it in good condition?	"PNK/BLU" and/or "PNK" wire circuit open. If OK, substitute a known-good ECM and recheck.	Replace A/C compressor relay.

NOTE:

When A/C evaporator temp. is below 3.5 °C (38.3 °F), A/C remains OFF ("E117-11" terminal voltage becomes 10 – 14 V). This condition is not abnormal.

Fig. 1 for Step 1

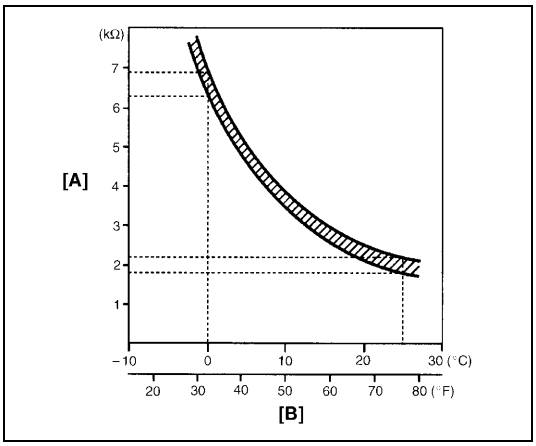

[A]: Resistance
[B]: Temperature

Table B-6 Electric Load Signal Circuit Check

Wiring Diagram

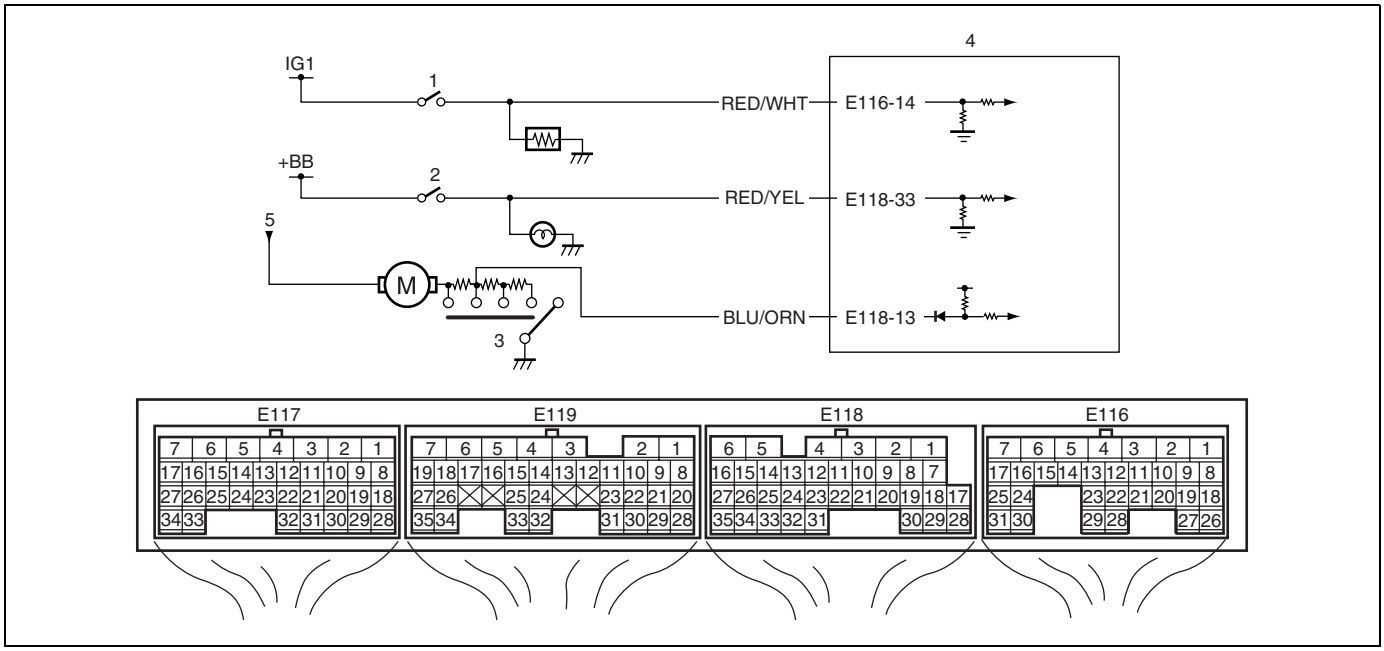

1. Rear defogger switch	3. Blower fan switch	5. Form blower fan motor relay
2. Light switch	4. ECM	

Troubleshooting

Step	Action	Yes	No
1	Is SUZUKI scan tool available?	Go to Step 2.	Go to Step 3.
2	Check Electric Load Signal Circuit. 1) Connect SUZUKI scan tool to DLC with ignition switch OFF. See Fig.1. 2) Start engine and select “DATA LIST” mode on scan tool. 3) Check electric load signal under following each condition. See Table 1. Is check result satisfactory?	Electric load signal circuit is in good condition.	“RED/WHT”, “RED/YEL” and/or “BLU/ORN” circuit open or short or each electric load circuit malfunction.
3	Check Electric Load Signal Circuit. 1) Turn ignition switch ON. 2) Measure voltage at each terminals “E116-14”, “E118-33” and “E118-13” of ECM connector connected, under above each condition. See Fig. 2. and Table 1. Is each voltage as specified?	Electric load signal circuit is in good condition.	“RED/WHT”, “RED/YEL” and/or “BLU/ORN” circuit open or short or each electric load circuit malfunction.

[A] Fig. 1 for Step 2 / [B] Fig. 2 for Step 3

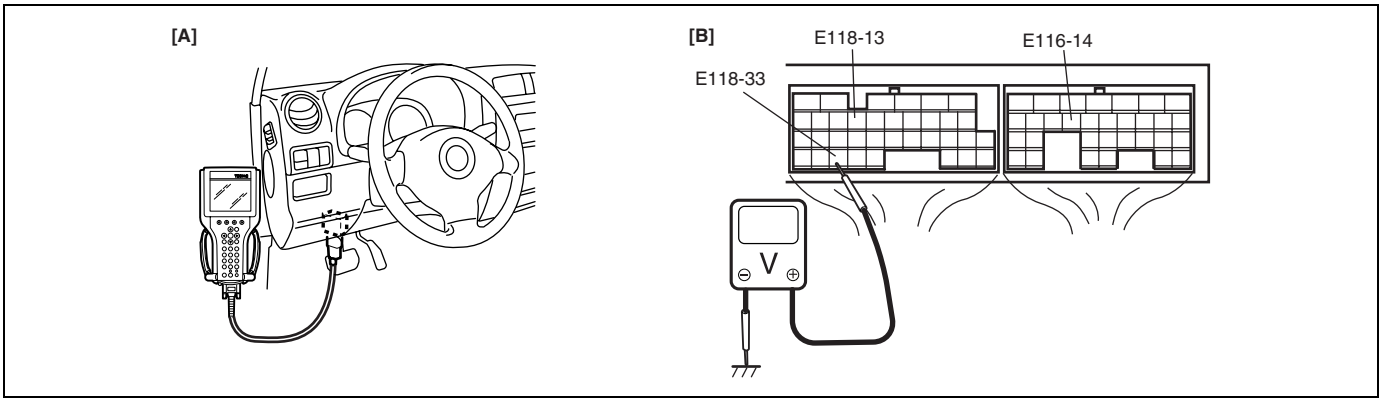

Table 1 for Step 2 and 3

		Scan tool or voltmeter		
		SUZUKI SCAN TOOL	VOLTAGE AT E116-14, E118-33	VOLTAGE AT E118-13
Ignition switch ON, Small light, heater blower fan (3rd speed position or more) and rear defogger all turned	OFF	OFF	0 – 1 V	10 – 14 V
	ON	ON	10 – 14 V	0 – 1 V

Special Tool

	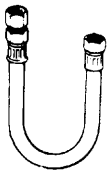	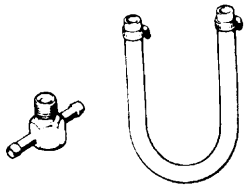	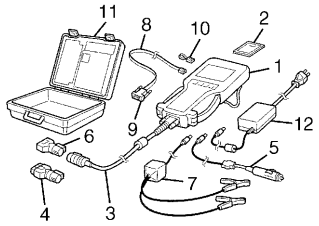
09912-58442 Pressure gauge	09912-58432 Pressure hose	09912-58490 3-way joint & hose	Tech 2 kit (SUZUKI scan tool) (See NOTE.)

NOTE:

- **This kit includes the following items.**
  1. Tech 2, 2. PCMCIA card, 3. DLC cable, 4. SAE 16/19 adapter, 5. Cigarette cable, 6. DLC loopback adapter, 7. Battery power cable, 8. RS232 cable, 9. RS232 adapter, 10. RS232 loopback connector, 11. Storage case, 12. Power supply

SECTION 6A3

ENGINE MECHANICAL (M13 ENGINE WITH VVT)

WARNING:

For vehicles equipped with Supplemental Restraint (Air Bag) System:

- **Service on and around the air bag system components or wiring must be performed only by an authorized SUZUKI dealer. Refer to "Air Bag System Components and Wiring Location View" under "General Description" in air bag system section in order to confirm whether you are performing service on or near the air bag system components or wiring. Please observe all WARNINGS and "Service Precautions" under "On-Vehicle Service" in air bag system section before performing service on or around the air bag system components or wiring. Failure to follow WARNINGS could result in unintentional activation of the system or could render the system inoperative. Either of these two conditions may result in severe injury.**
- **Technical service work must be started at least 90 seconds after the ignition switch is turned to the "LOCK" position and the negative cable is disconnected from the battery. Otherwise, the system may be activated by reserve energy in the Sensing and Diagnostic Module (SDM).**

NOTE:

For the items with asterisk (*) in the "CONTENTS" below, refer to "Section 6A1: Engine Mechanical (M13 Engine without VVT)" in this Manual.

CONTENTS

General Description 6A3-2
- Engine 6A3-2
- Engine Lubrication 6A3-3
- Camshaft Position Control (VVT: Variable Valve Timing) System 6A3-4
  - System description 6A3-4
  - Oil control valve 6A3-5
  - Cam timing sprocket 6A3-5
  - Timing advancing 6A3-5
  - Timing holding 6A3-5
  - Timing retarding 6A3-5
  - Targeted timing varying operation 6A3-6

Diagnosis ..... 6A1- *
- Diagnosis Table ..... 6A1- *
- Compression Check ..... 6A1- *
- Engine Vacuum Check ..... 6A1- *
- Oil Pressure Check ..... 6A1- *
- Valve Lash (Clearance) ..... 6A1- *

On-Vehicle Service 6A3-7
- Air Cleaner Element ..... 6A1- *
- Air Cleaner Assembly ..... 6A1- *
- Knock Sensor ..... 6A1- *
- Cylinder Head Cover ..... 6A1- *
- Throttle Body and Intake Manifold ..... 6A1- *
- Exhaust Manifold ..... 6A1- *
- Oil Pan and Oil Pump Strainer ..... 6A1- *
- Timing Chain Cover 6A3-7
  - Oil seal 6A3-10
  - Timing chain cover 6A3-10
  - Oil control valve 6A3-10
  - Oil gallery pipe 6A3-11
- Oil Pump 6A3-14
  - Relief valve spring free length and load 6A3-17
- Timing Chain and Chain Tensioner 6A3-18
- Camshaft, Tappet and Shim 6A3-24
- Valves and Cylinder Head ..... 6A1- *
- Pistons, Piston Rings, Connecting Rods and Cylinders ..... 6A1- *
- Engine Mountings ..... 6A1- *

Unit Repair Overhaul ..... 6A1- *
- Engine Assembly ..... 6A1- *
- Main Bearings, Crankshaft and Cylinder Block ..... 6A1- *

Required Service Material 6A3-32

Tightening Torque Specification 6A3-32

Special Tool 6A3-34

General Description

Engine

The engine is water-cooled, in line 4 cylinders, 4 stroke cycle gasoline unit with its DOHC (Double overhead camshaft) valve mechanism arranged for “V” type valve configuration and 16 valves (4 valves/one cylinder). The double overhead camshaft is mounted over the cylinder head; it is driven from crankshaft through timing chain, and no push rods are provided in the valve train system.

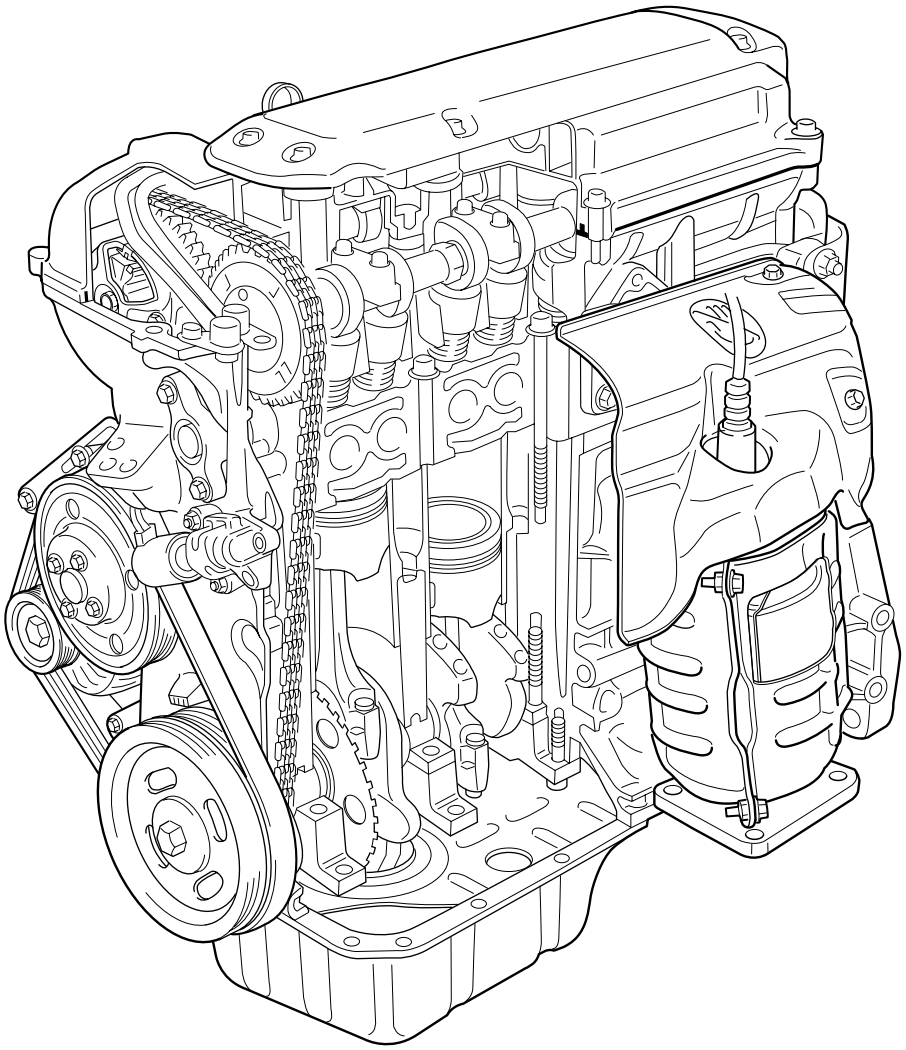

Engine Lubrication

The oil pump is of a trochoid type, and mounted on the crankshaft. Oil is drawn up through the oil pump strainer and passed through the pump to the oil filter.
The filtered oil flows into 2 paths in cylinder block.
In one path, oil reaches the crankshaft journal bearings. Oil from the crankshaft journal bearings is supplied to the connecting rod bearings by means of intersecting passages drilled in the crankshaft, and then injected from the big end of connecting rod to lubricate piston, rings and cylinder wall.
In other path oil goes up to the cylinder head and lubricates valves and camshafts, etc., after passing through the internal oilway of camshafts.

An oil relief valve is provided on the oil pump. This valve starts relieving oil pressure when the pressure exceeds specified value.

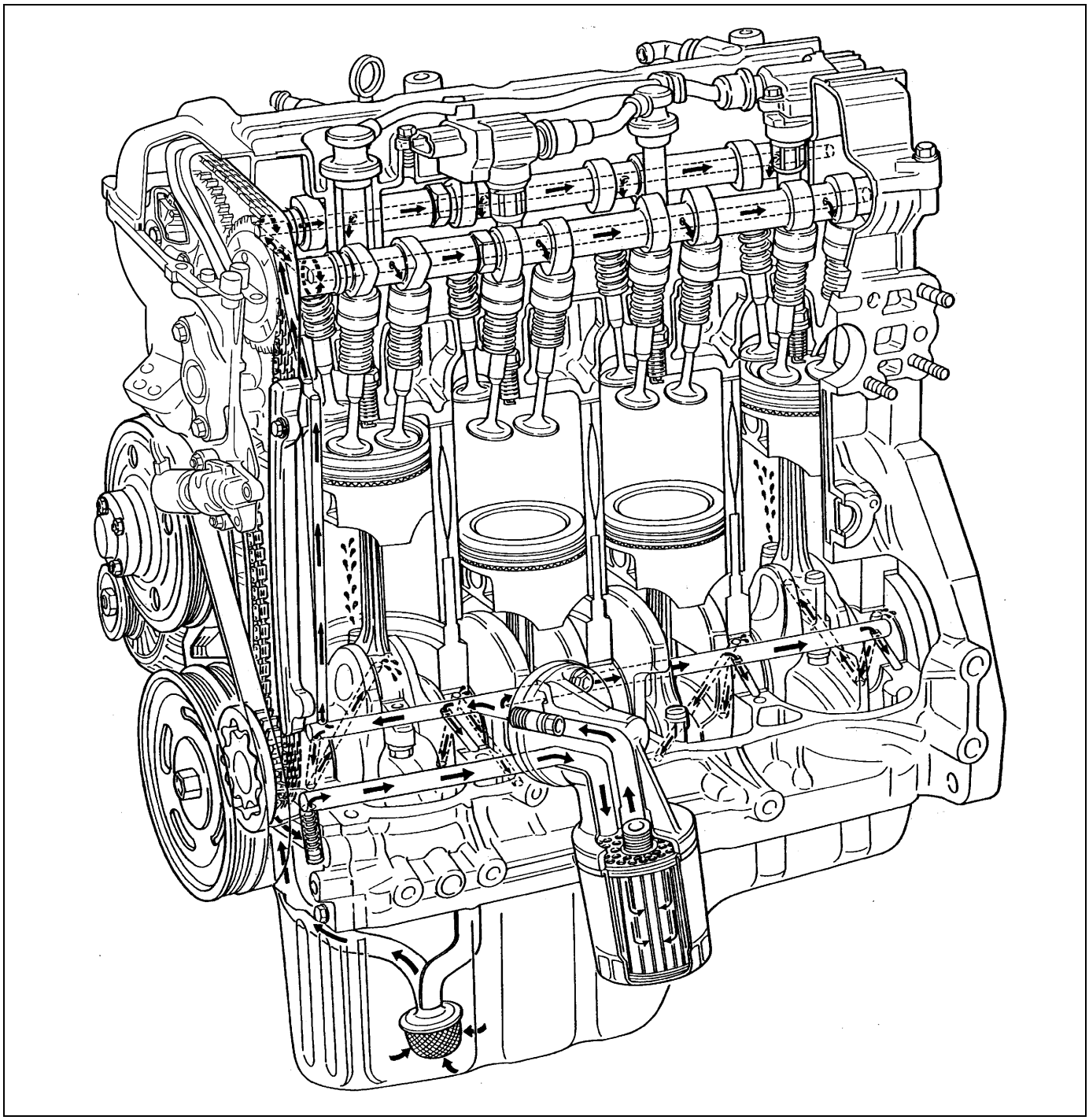

Camshaft Position Control (VVT: Variable Valve Timing) System

System description

The VVT system is an electronic control system which continuously vary and optimize the intake valve timing in response to the engine operating condition.

The optimized intake valve timing produce such an air intake with high efficiency that both the higher power generation and lower fuel consumption can be attained in the whole engine speed range from low to high. In the area of the average engine load, low emission of nitrogen oxides (NOx) and high fuel efficiency can also be attained by making the valve opening overlap between the intake and exhaust valves longer.

For the brief of the system operation, the intake valve timing is varied by the cam timing sprocket (1) which varies the rotational phase between the intake camshaft (3) and sprocket. The rotor (2) in the cam timing sprocket is actuated by switching or adjusting the hydraulic pressure applied to the chambers for the timing advancing (7) and/or retarding (6). To switch or adjust the hydraulic pressure appropriately, ECM operates the oil control valve (12) with detecting the engine speed, intake air value, throttle opening, engine coolant temperature and camshaft position (angle).

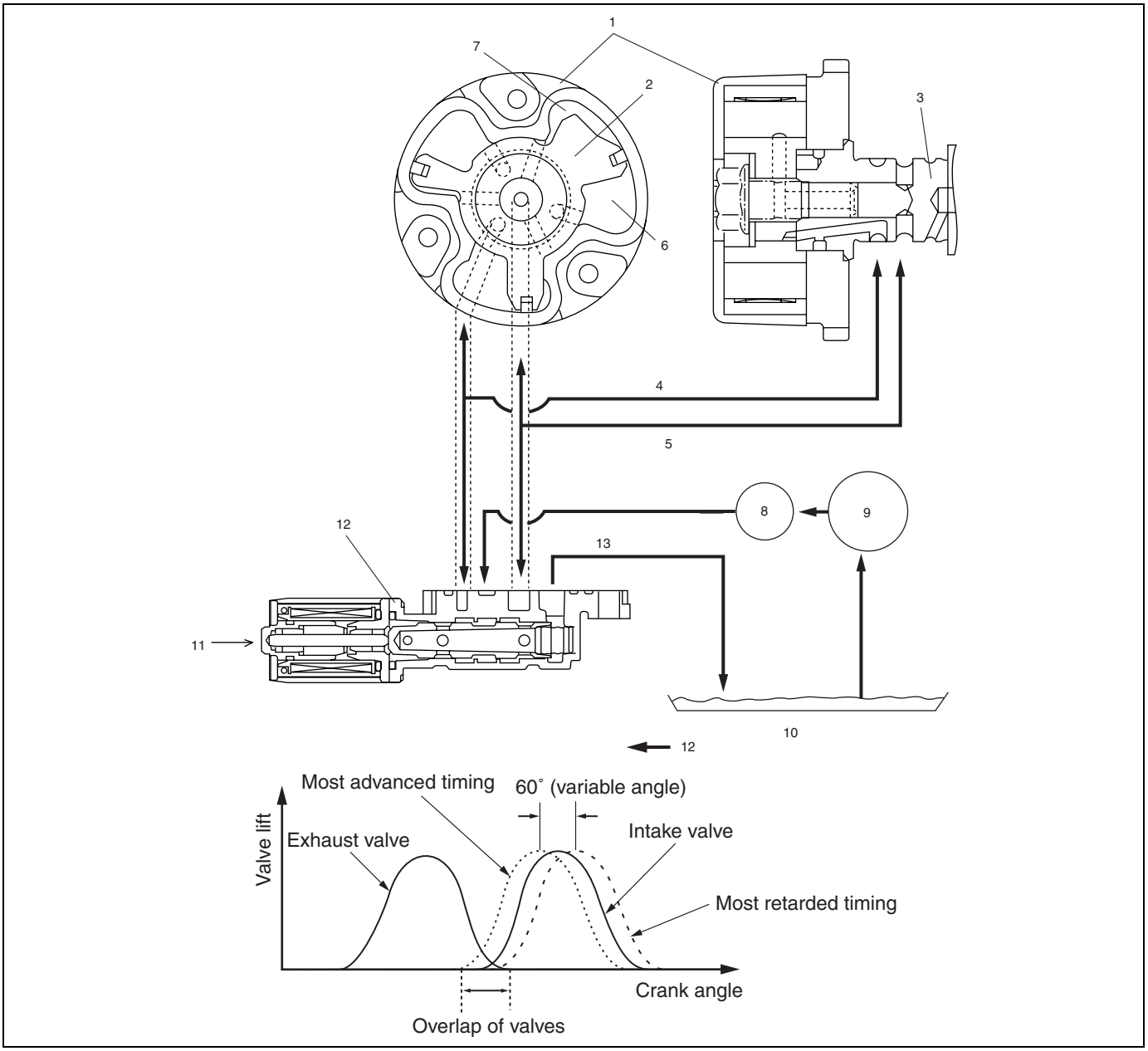

4. Oil passage to chamber for timing retarding	8. Oil filter	10. Oil pan	12. Oil flow
5. Oil passage to chamber for timing advancing	9. Oil pump	11. Control signal from ECM	

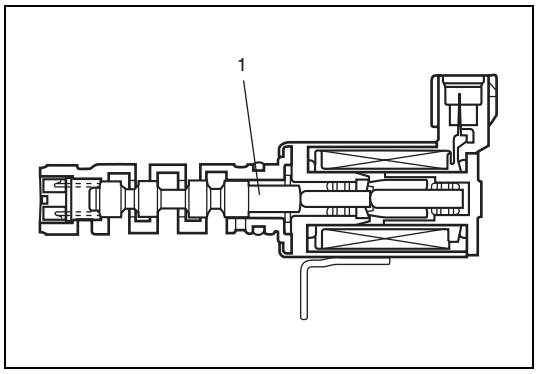

Oil control valve

The oil control valve switches and adjusts the hydraulic pressure applied to the cam timing sprocket by moving the spool valve (1) according to the duty pulse signals output from the ECM. By this operation, the intake valve timing is varied continuously. Signals output from the ECM are the duty pulse of about 240 Hz.

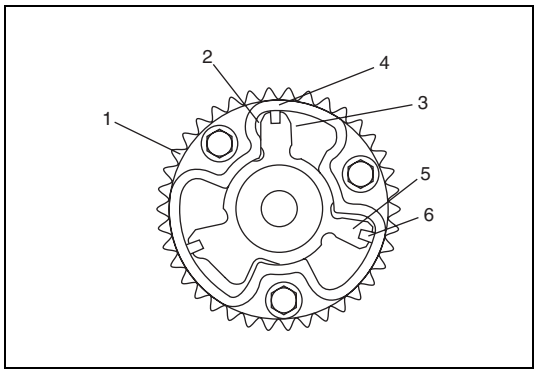

Cam timing sprocket

The cam timing sprocket is equipped with the chambers for timing advancing (2) and retarding (3) which are separated by the rotor (5). The rotor rotates receiving the hydraulic pressure applied to both the chambers. The sprocket (1) is installed on the housing (4) and the rotor is secured on the intake camshaft by fastening the bolts. Therefore, the actuation of the rotor makes the phase difference between the sprocket and intake camshaft.

6. Seal

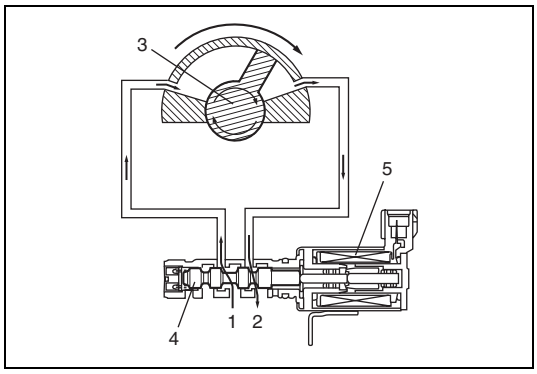

Timing advancing

When the duty ratio of the signal output from the ECM is heavy, the spool valve (4) of the oil control valve moves to the left (opposite direction against the coil (5)). By this spool valve movement, the pressurized oil (1) is led into the chambers for timing advancing and the oil in the chambers for timing retarding is drained. This operations actuate the rotor (3) and result in the advanced timing of the intake valve.

2. Drain

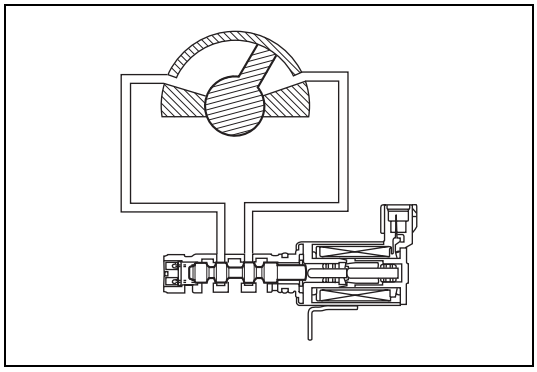

Timing holding

When the duty ratio of the signal output from the ECM shows that of holding, the spool valve of the oil control valve is located at hold position. Because this condition generates no oil pressure changes in both chambers, the rotor is fixed at a target position.

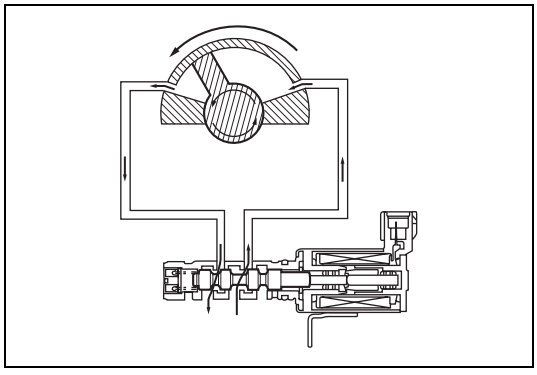

Timing retarding

When the duty ratio of the signal output from the ECM is light, the spool valve of the oil control valve moves to the right (head for the coil). By this spool valve movement, the pressurized oil is led into the chambers for timing retarding and the oil in the chambers for timing advancing is drained. This operations actuate the rotor and result in the retarded timing of the intake valve.

Targeted timing varying operation

DRIVING CONDITION	VALVE TIMING	TARGET OF CONTROL	EFFECT
Engine running at idle speed	Most retarded	To shorten the valve opening overlap in order to prevent the exhaust gas counterflow to intake manifold.	Stabilization of the engine rotation at idle speed.
Average engine load range	To the advanced side	To lengthen the valve opening overlap in order to enhance the internal exhaust gas recirculation and reduce the pumping loss.	Improvement of the fuel efficiency. Lowering of the exhaust emission.
Light engine load range	To the retarded side	To shorten the valve opening overlap in order to prevent the exhaust gas counterflow to intake manifold.	Keeping of the engine stability.
Low or average engine speed range with heavy engine load	To the advanced side	To advance the closing timing of the intake valve in order to improve the volumetric efficiency.	Improvement of generating the engine torque at low and average engine speed.
High engine speed range with heavy engine load	To the retarded side	To retard the closing timing of the intake valve in order to improve the volumetric efficiency.	Improvement of generating the engine power.
Low engine coolant temperature	Most retarded	To shorten the valve opening overlap in order to prevent the exhaust gas counterflow to intake manifold and reduce the fuel increasing. To slow the fast idle speed of the engine as a result of stabilizing the engine idling.	Stabilization of the fast idling of the engine. Improvement of the fuel efficiency.
At engine starting and stopping	Most retarded	To shorten the valve opening overlap in order to prevent the exhaust gas counterflow to intake manifold.	Improvement of start ability

On-Vehicle Service

Timing Chain Cover

CAUTION:

- **Keep working table, tools and hands clean while over hauling.**
- **Use special care to handle aluminium parts so as not to damage them.**
- **Do not expose removed parts to dust. Keep them always clean.**

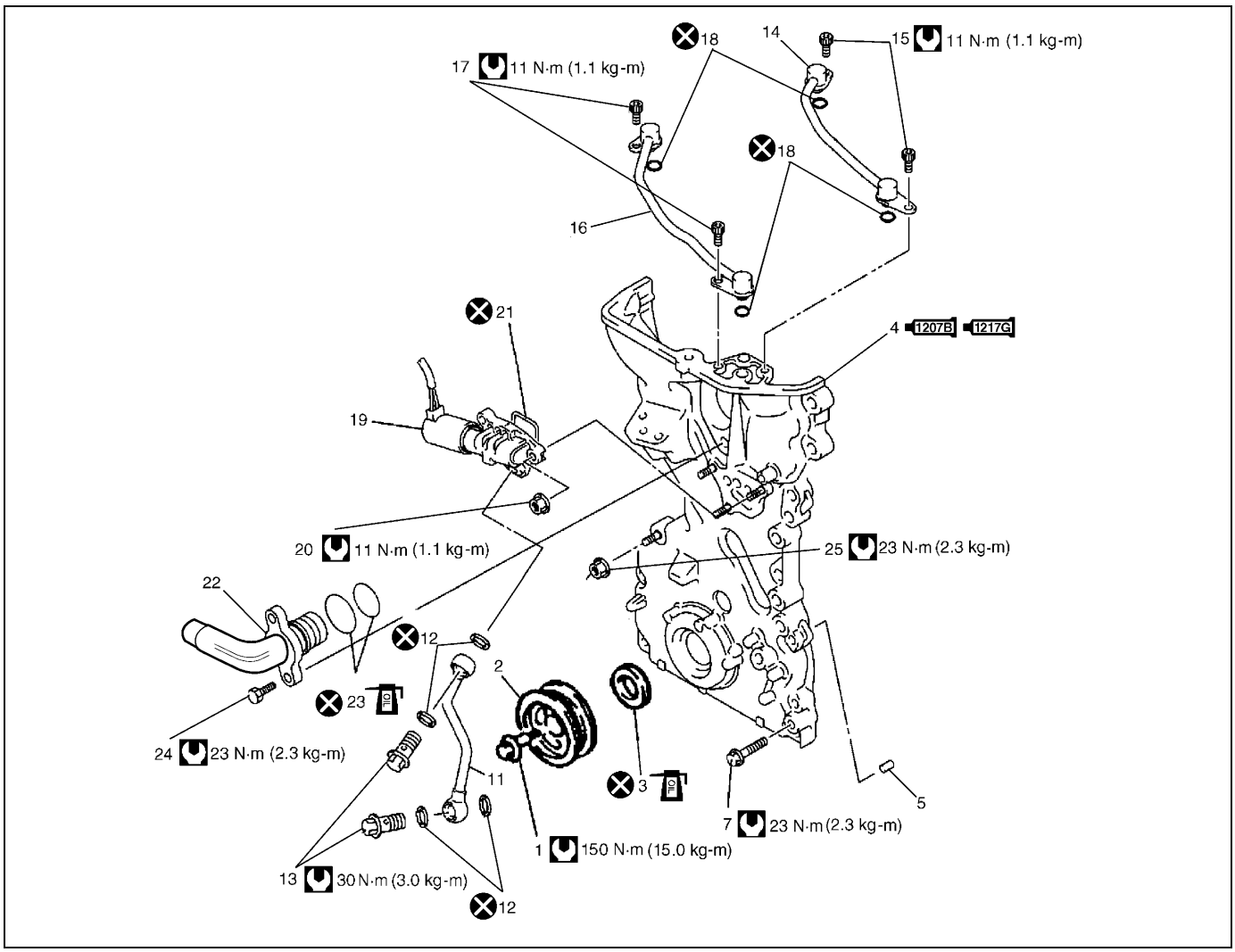

[A]: Sealant application amount	8. Blank	18. O ring
"a": 3 mm (0.12 in.)	9. Blank	19. Oil control valve
"b": 2 mm (0.08 in.)	10. Blank	20. Oil control valve mounting nut
1. Crankshaft pulley bolt	11. Oil gallery pipe No.1	21. O ring
2. Crankshaft pulley	12. Copper washer	22. Water pipe
3. Oil seal : Apply engine oil to oil seal lip.	13. Oil gallery pipe No.1 bolt	23. O ring
4. Timing chain cover : Apply sealant 99000-31140 to the mating surface of cylinder and cylinder head. : Apply sealant 99000-31260 to the mating surface of timing chain cover referring to the figure of Step 1) of "INSTALLATION" under "Timing Chain Cover" in this section.	14. Oil gallery pipe No.2	24. Water pipe bolt
5. Pin	15. Oil gallery pipe No.2 bolt	25. Timing chain cover mounting nut
6. Blank	16. Oil gallery pipe No.3	Tightening torque
7. Timing chain cover mounting bolts	17. Oil gallery pipe No.3 bolt	Do not reuse.

REMOVAL

1) Disconnect negative cable at battery.
2) Remove A/C compressor and/or P/S pump belt (if equipped).
3) Remove generator belt.
4) Drain engine oil.

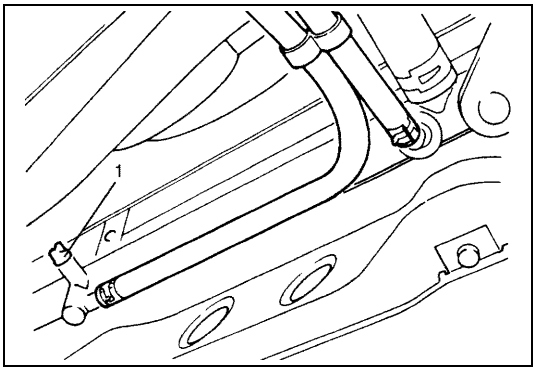

5) Drain coolant.

WARNING:
To help avoid danger of being burned, do not remove drain plug (1) and radiator cap while engine and radiator are still hot. Scalding fluid and steam can be blown out under pressure if plug and cap are taken off too soon.

6) Disconnect radiator inlet and outlet hoses from each pipe.

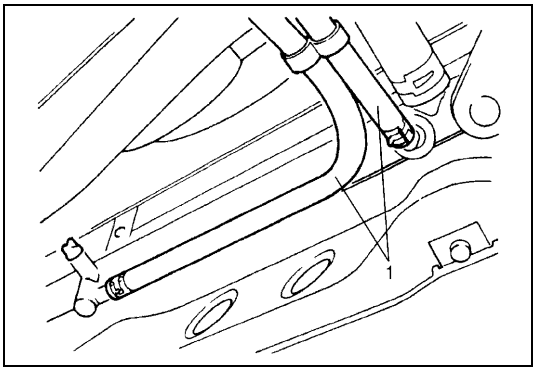

7) Disconnect A/T fluid hoses (1) (vehicle with A/T) and release its clamps. Place some container under radiator to receive A/T fluid which will flow out when hose is disconnected.

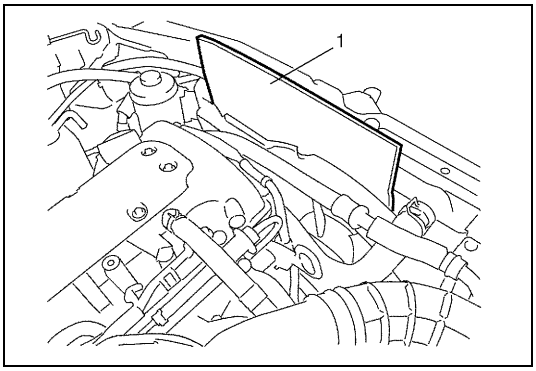

8) Remove fan shroud upper bolts and install board (1) or the like. This prevents damage to radiator fins when removing and installing radiator.
9) Remove radiator with cooling fan. Then remove water pump pulley. Refer to “Radiator” and “Water Pump Belt and Cooling Fan” in Section 6B.

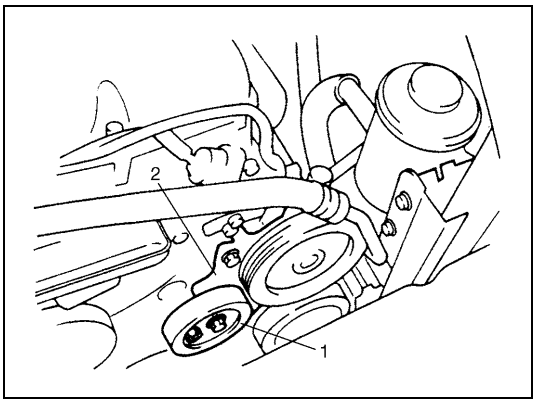

10) Remove A/C compressor and/or P/S pump belt tension pulley (1) (if equipped).
11) With hose connected, detach P/S pump from its bracket and then remove P/S pump bracket (2) (if equipped) referring to “Power Steering Pump” in Section 3B1.

NOTE:
Suspend removed P/S pump at a place where no damage will be caused during removal and installation of timing chain cover.

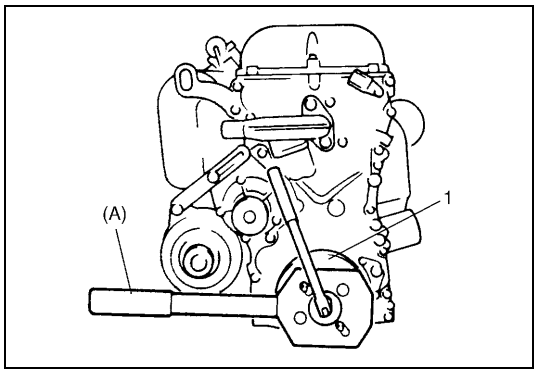

12) Remove crankshaft pulley bolt.
To lock crankshaft pulley (1), use special tool with it as shown in figure.

Special tool
(A) : 09917-68221

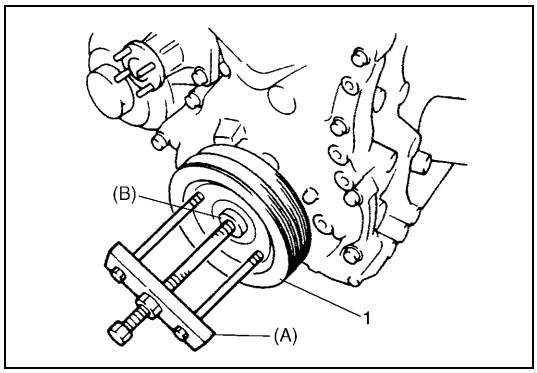

13) Remove crankshaft pulley (1).
If it is hard to remove, use special tools as shown in figure.
If bolts of special tool are too long, replace them with those of suitable length.

Special tool
(A) : 09944-36011
(B) : 09926-58010

14) Remove oil pan referring to “Oil Pan and Oil Pump Strainer” in this section.
15) Remove cylinder head cover referring to “Cylinder Head Cover” in this section.
16) Remove water pump pulley.

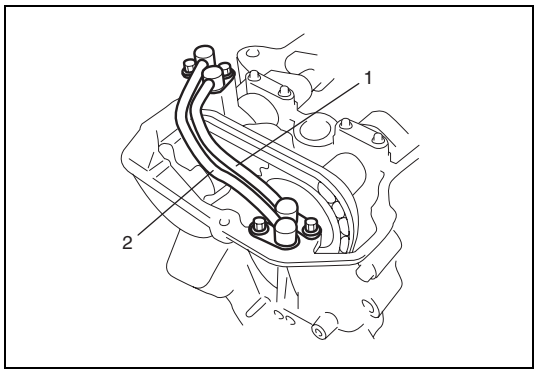

17) Remove oil gallery pipes No.2 (1) and No.3 (2).

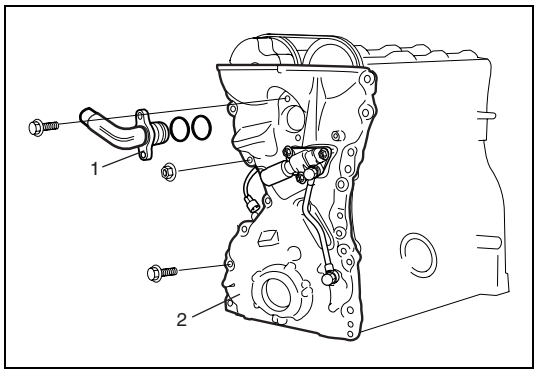

18) Remove water pipe (1) from timing chain cover (2).
19) Remove timing chain cover.

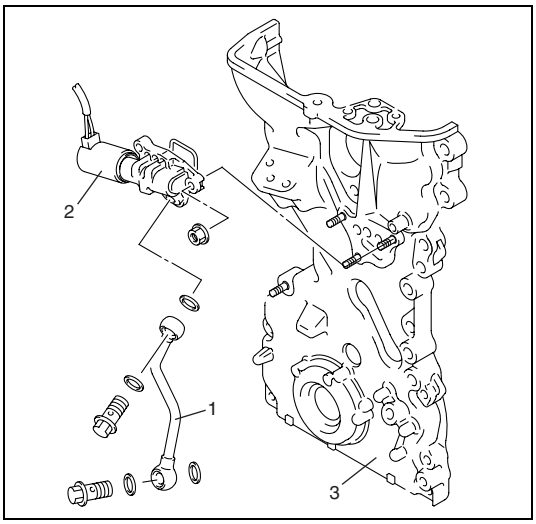

20) Remove oil gallery pipe No.1 (1) and oil control valve (2) from timing chain cover (3).
21) Remove oil seal from timing chain cover, if necessary.

CLEANING

- Clean sealing surface on timing chain cover, cylinder block and cylinder head.
  Remove oil, old sealant and dust from sealing surface.

INSPECTION

Oil seal

- Check oil seal (1) lip for fault or other damage.
  Replace as necessary.

Timing chain cover

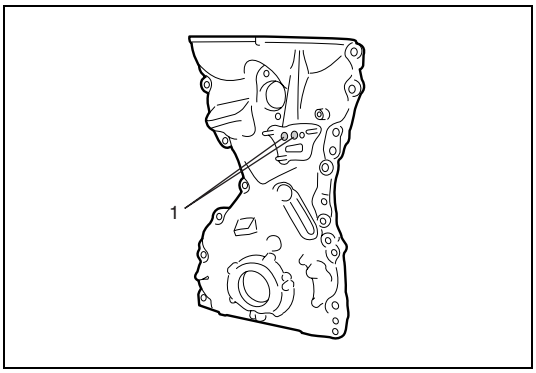

Inspect strainer (1) of oil passage for driving intake cam timing sprocket assembly (VVT actuator).
If clog or foreign matter exists, clean strainer.

Oil control valve

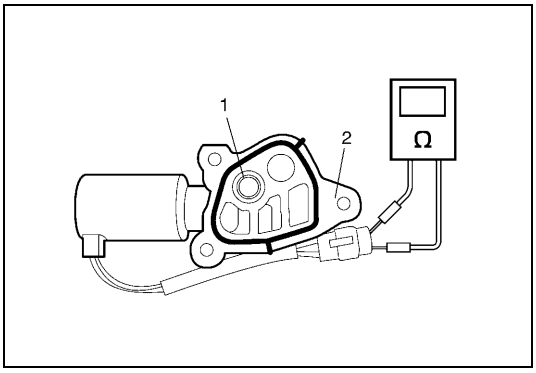

1) Inspect strainer (1) and mating surface (2) of oil control valve for clog or damage.
   Clean oil control valve if clog or foreign matter is present on strainer or mating surface of oil control valve.
   Replace oil control valve if its mating surface is damaged.
2) Check resistance between terminals of oil control valve.
   If resistance is out of specification, replace oil control valve.

Oil control valve resistance
6.7 – 7.7 Ω (at 20 °C (68 °F))

Oil gallery pipe

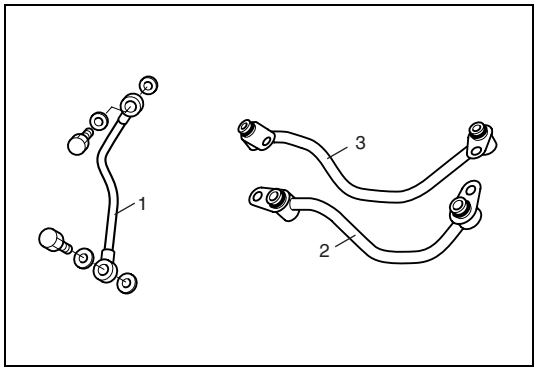

Inspect oil gallery pipes No.1 (1), No.2 (2) and No.3 (3).
Replace if crack, deformation or clog exists.

INSTALLATION

1) Clean sealing surface on timing chain cover, cylinder block and cylinder head.
   Remove oil, old sealant and dust from sealing surface.

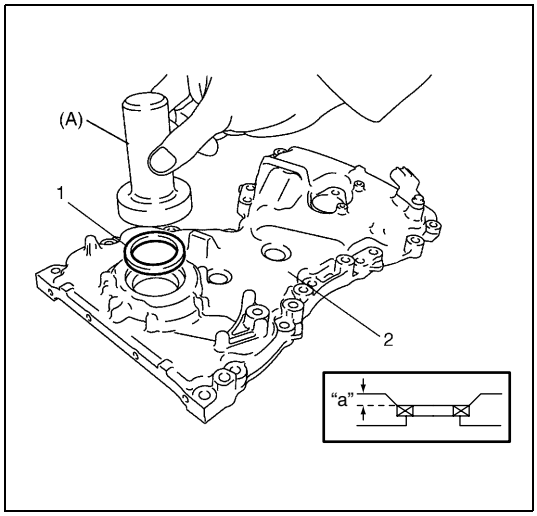

2) Install new oil seal (1) to timing chain cover (2), if removed.

NOTE:

When installing new oil seal, press fit to timing chain cover (2) by using special tool (Bearing installer) as shown in figure.

Special tool
(A) : 09913-75810

Drive in dimension
"a" : 1.5 mm (0.06 in.)

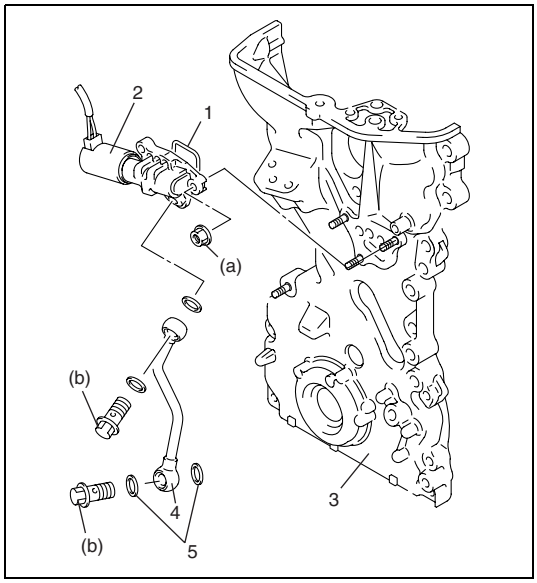

3) Install new O-ring (1) to oil control valve (2).
4) Install oil control valve to timing chain cover (3).
   Tighten nuts to specification.

Tightening torque
Oil control valve mounting nuts
(a) : 11 N·m (1.1 kg-m, 8.0 lb-ft)

5) Install oil gallery pipe No.1 (4) with new copper washers (5) to timing chain cover.
   Tighten bolts to specification.

Tightening torque
Oil gallery pipe No.1 bolts
(b) : 30 N·m (3.0 kg-m, 21.5 lb-ft)

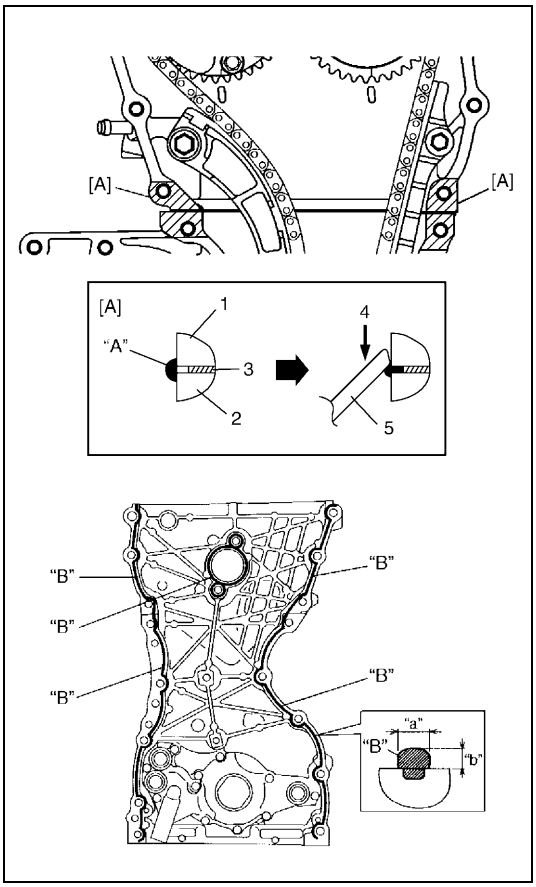

6) Apply sealant "A" to mating surface of cylinder and cylinder head and "B" to mating surface of timing chain cover as shown in figure.

"A" : Sealant 99000-31140
"B" : Sealant 99000-31260

Sealant amount for timing chain cover
Width "a" : 3 mm (0.12 in.)
Height "b" : 2 mm (0.08 in.)

[A]	View A
1.	Cylinder head
2.	Cylinder block
3.	Cylinder head gasket
4.	Rub into
5.	Jig

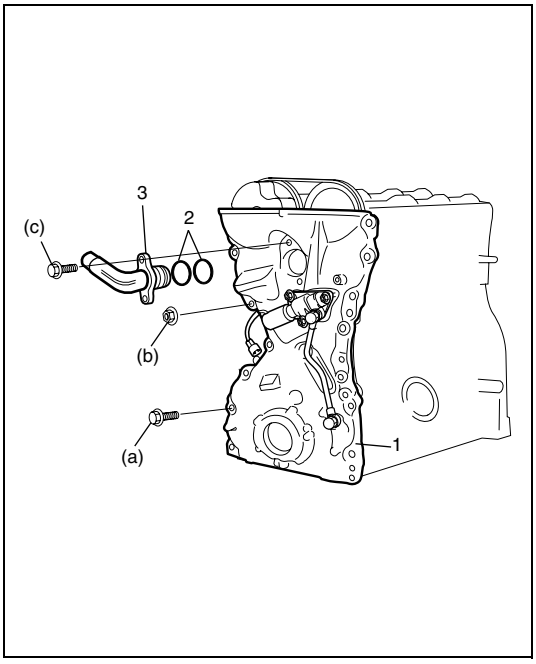

7) Apply engine oil to oil seal lip, then install timing chain cover (1).
Tighten bolts and nut to specified torque.

NOTE:

Before installing timing chain cover, check that pin is securely fitted.

Tightening torque
Timing chain cover bolts (a) : 25 N·m (2.5 kg-m, 18.0 lb-ft)
Timing chain cover nut (b) : 25 N·m (2.5 kg-m, 18.0 lb-ft)

8) Apply engine oil to new O-rings (2) and install them to water pipe (3).
9) Install water pipe (3) to timing chain cover (1).
Tighten bolts to specified torque.

Tightening torque
Water pipe bolts (c) : 25 N·m (2.5 kg-m, 18.0 lb-ft)

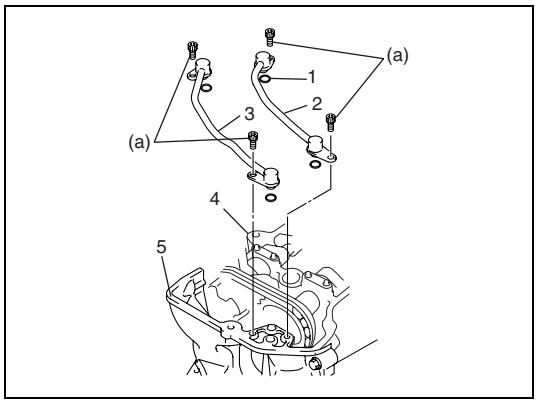

10) Install new O-ring (1) to oil gallery pipes No.2 (2) and No.3 (3).
11) Install oil gallery pipes No.2 and No.3 to cylinder head (4) and timing chain cover (5).
    Tighten bolts to specified torque.

Tightening torque
Oil gallery pipes No.2 and No.3 bolts
(a) : 11 N·m (1.1 kg-m, 8.0 lb-ft)

12) Install water pump pulley.

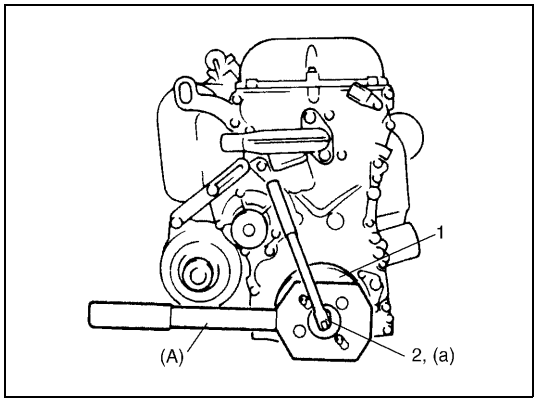

13) Install crankshaft pulley (1). Tighten bolt (2) to specified torque.
    To lock crankshaft pulley, use special tool with it as shown in figure.

Special tool
(A) : 09917-68221

Tightening torque
Crankshaft pulley bolt
(a) : 150 N·m (15.0 kg-m, 108.5 lb-ft)

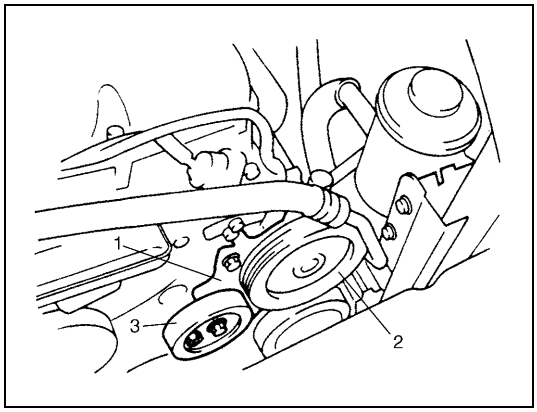

14) Install P/S pump bracket (1), P/S pump (2) and A/C compressor and/or P/S pump belt tension pulley (3) (if equipped) referring to “Power Steering Pump” in Section 3B1.
15) Install cylinder head cover referring to “Cylinder Head Cover” in this section.
16) Install oil pan referring to “Oil Pan and Oil Pump Strainer” in this section.
17) Install radiator with cooling fan and connect A/T fluid hoses (vehicle with A/T), radiator inlet and outlet hoses referring to “Water Pump Belt and Cooling Fan” and “Radiator” in Section 6B.
18) Adjust generator belt tension referring to “Water Pump Belt Tension” in Section 6B for adjusting procedure.
19) Adjust A/C compressor and/or P/S pump belt tension (if equipped) referring to “Compressor Drive Belt” in Section 1B or “Power Steering Belt” in Section 3B1 for adjusting procedure.
20) Refill cooling system with coolant, engine with engine oil and A/T with specified A/T fluid (vehicle with A/T).
21) Verify that there is no coolant leakage, oil leakage and A/T fluid leakage (vehicle with A/T) at each connection.

Oil Pump

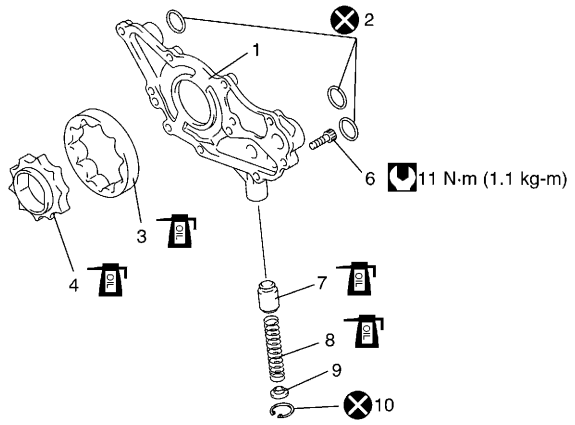

[A] : Sealant application amount	4. Inner rotor	10. Circlip
"a" : 3 mm (0.12 in.)	5. Timing chain cover : Apply sealant 99000-31140 to the mating surface of cylinder and cylinder head. : Apply sealant 99000-31260 to mating surface of timing chain cover referring to the figure of Step 5) of "INSTALLATION" under "Timing Chain Cover" in this section.	Tightening torque
"b" : 2 mm (0.08 in.)	6. Rotor plate bolt	Do not reuse.
1. Rotor plate	7. Relief valve	Apply thin coat of engine oil to sliding surface of each parts.
2. O ring	8. Spring	
3. Outer rotor	9. Retainer	

REMOVAL

1) Disconnect negative cable at battery.
2) Remove timing chain cover, referring to "Timing Chain Cover" in this section.

DISASSEMBLY

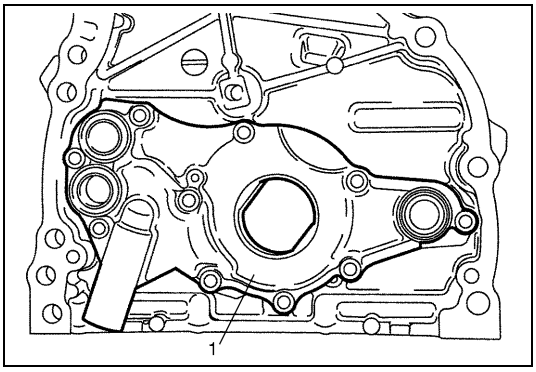

1) Remove rotor plate (1) by removing its mounting bolts.

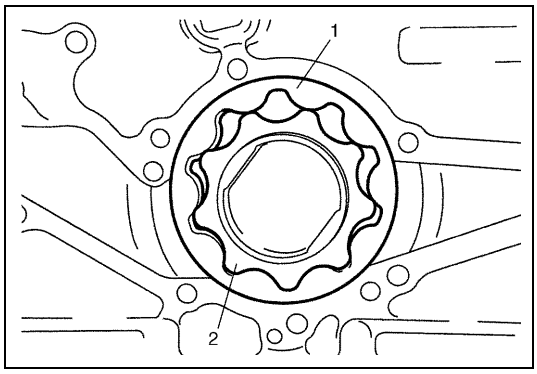

2) Remove outer rotor (1) and inner rotor (2).

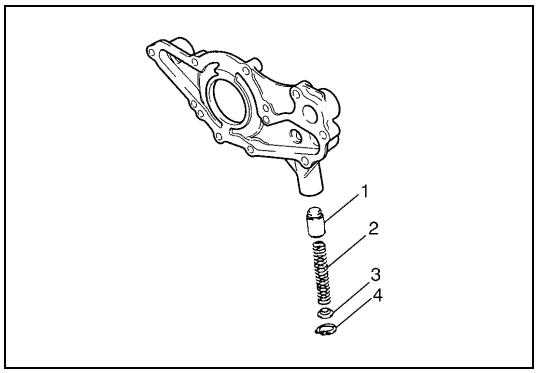

3) Remove relief valve (1), spring (2) and retainer (3) by removing circlip (4).

INSPECTION

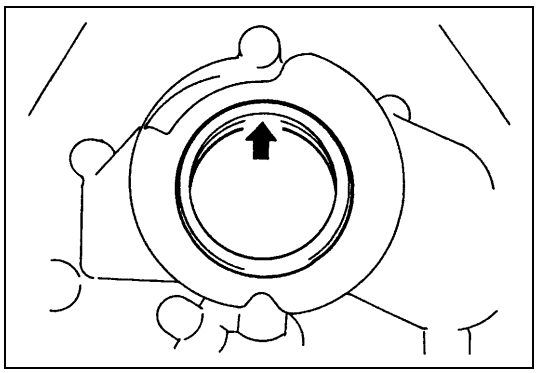

- Check oil seal lip for fault or other damage. Replace as necessary.

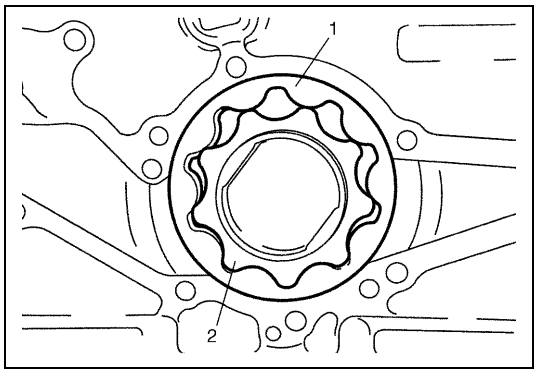

- Check outer (1) and inner rotors (2), rotor plate, and oil pump case for excessive wear or damage.

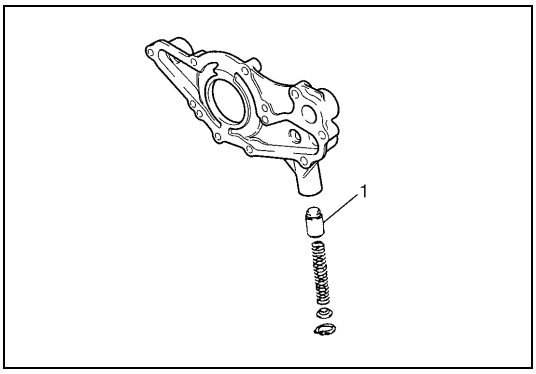

- Check relief valve (1) for excessive wear or damage and operates smoothly.

MEASUREMENT

Radial clearance

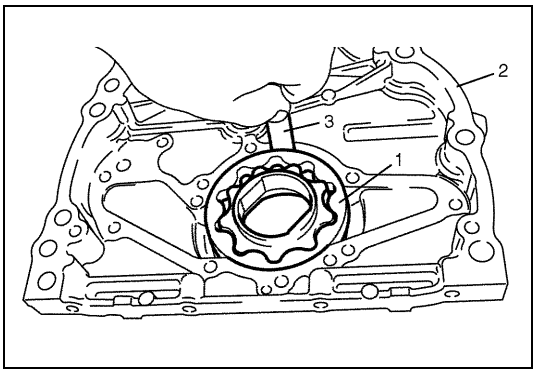

Check radial clearance between outer rotor (1) and case (2), using thickness gauge (3).
If clearance exceeds its limit, replace outer rotor or case.

Limit on radial clearance between outer rotor and case for oil pump
0.310 mm (0.0122 in.)

Side clearance

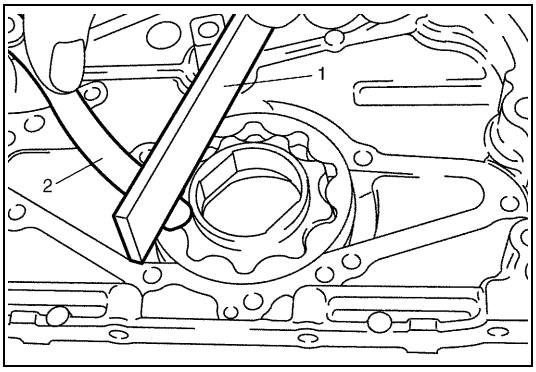

Using straight edge (1) and thickness gauge (2), measure side clearance.

Limit on side clearance for oil pump inner rotor
0.15 mm (0.0059 in.)

Relief valve spring free length and load

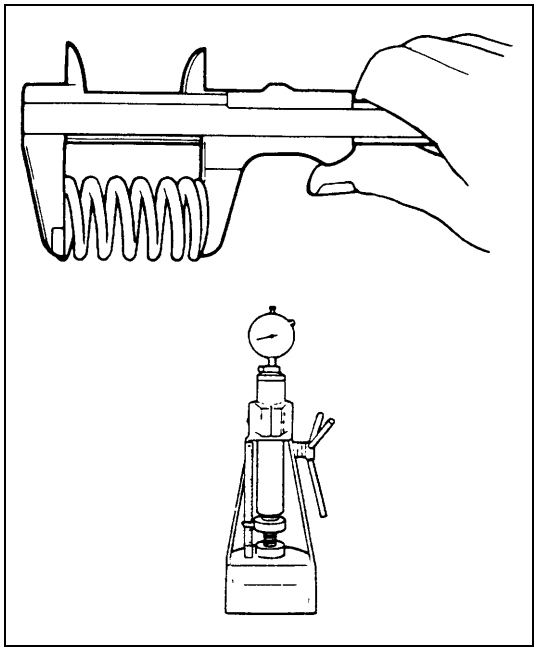

Check relief valve spring free length and load as shown in figure. If the measured valve spring length is lower than the specification, replace relief valve spring.

	Standard	Limit
Free length	**52.4 mm (2.06 in.)**	**–**
Load at spring length 38.5 mm (1.52 in.)	**77 N (7.7 kgf, 17.0 lb)**	**69 N (6.9 kgf, 15.0 lb)**

ASSEMBLY

1) Wash, clean and then dry all disassembled parts.
2) Apply thin coat of engine oil to inner and outer rotors, oil seal lip portion, and inside surfaces of oil pump case and plate.

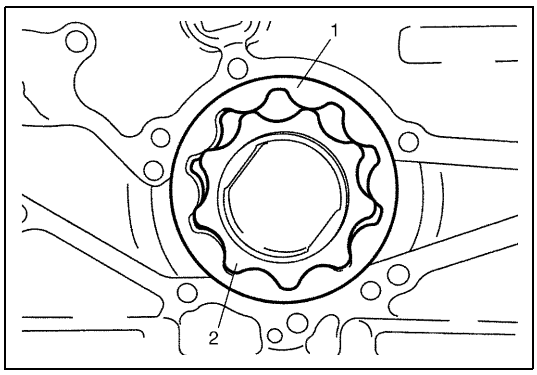

3) Install outer (1) and inner rotors (2) to oil pump case.

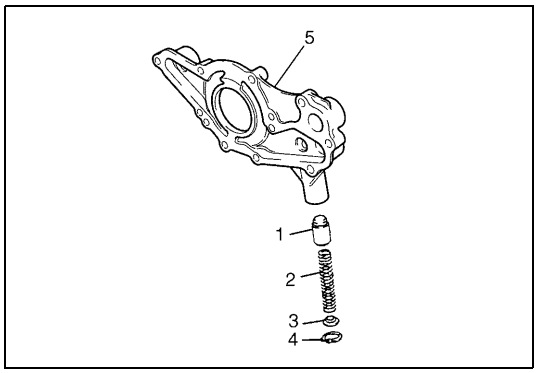

4) Apply engine oil to relief valve (1) and spring (2), and install them with retainer (3) and new circlip (4) to rotor plate (5).

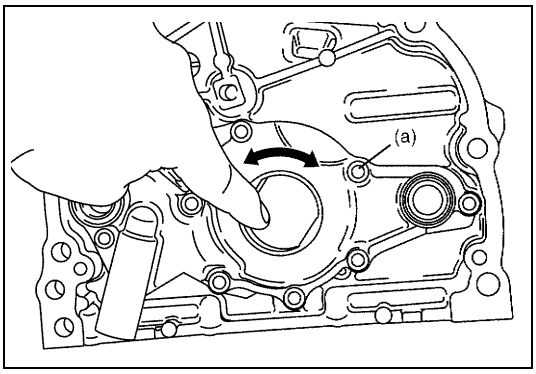

5) Install rotor plate and tighten all bolts to specified torque.
After installing plate, check to be sure that rotors turn smoothly by hand (0.3 N·m (0.03 kg-m, 0.25 lb-ft) torque or below).

Tightening torque
Oil pump rotor plate bolts (a) : 11 N·m (1.1 kg-m, 8.0 lb-ft)

INSTALLATION

Reverse removal order for installation.

Timing Chain and Chain Tensioner

CAUTION:
After timing chain is removed, never turn crankshaft and camshafts independently more than its allowable turning range described in "INSTALLATION" section.
If turned, interference may occur between piston and valves and valves themselves, and parts related to piston and valves may be damaged.

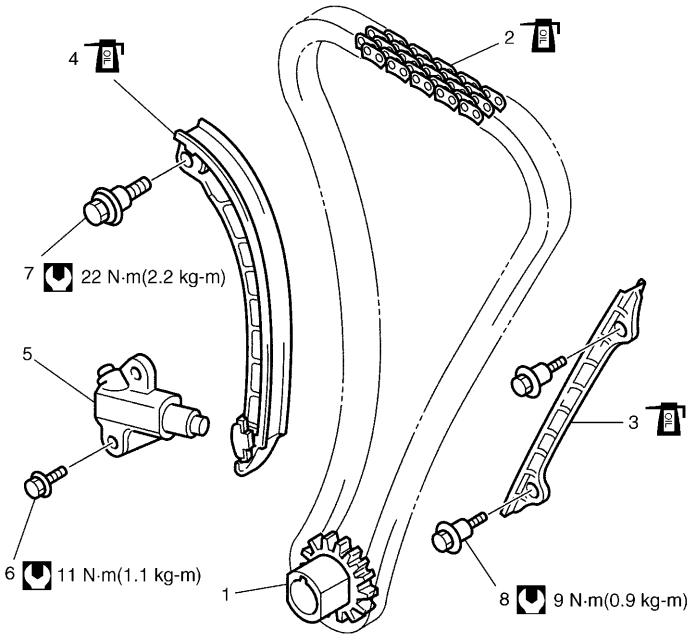

1. Crankshaft timing sprocket	5. Timing chain tensioner adjuster assembly	Tightening torque
2. Timing chain	6. Chain tensioner adjuster mounting bolt	Apply engine oil to sliding surface.
3. Timing chain No.1 guide	7. Chain tensioner mounting bolt	
4. Timing chain tensioner	8. Chain guide mounting bolt	

REMOVAL

1) Remove timing chain cover referring to “Timing Chain Cover”.

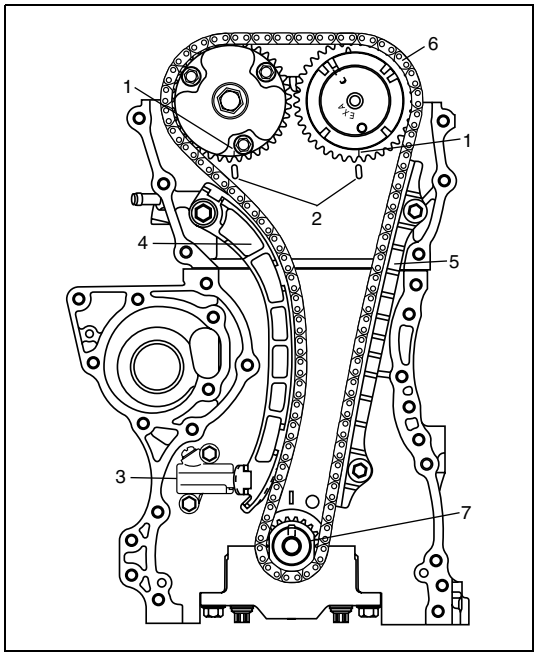

2) Align both intake and exhaust camshaft timing sprocket marks (1) with notches (2) of cylinder head respectively by turning crankshaft.
3) Remove timing chain tensioner adjuster assembly (3).
4) Remove timing chain tensioner (4).
5) Remove timing chain No.1 guide (5).
6) Remove timing chain (6) with crankshaft timing sprocket (7).

INSPECTION

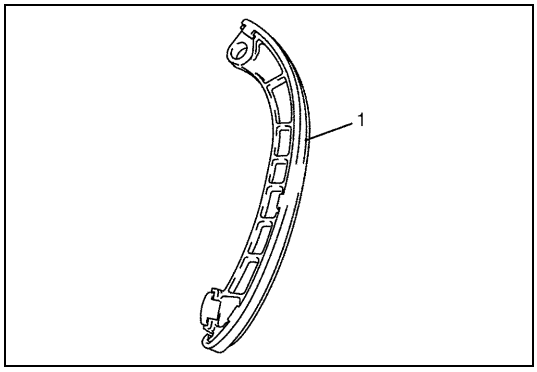

Timing chain tensioner

- Check shoe (1) for wear or damage.

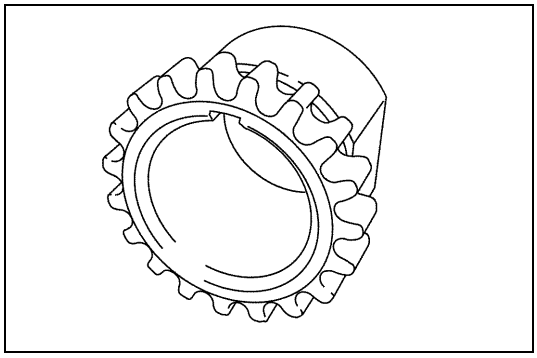

Crankshaft timing sprocket

- Check teeth of sprocket for wear or damage.

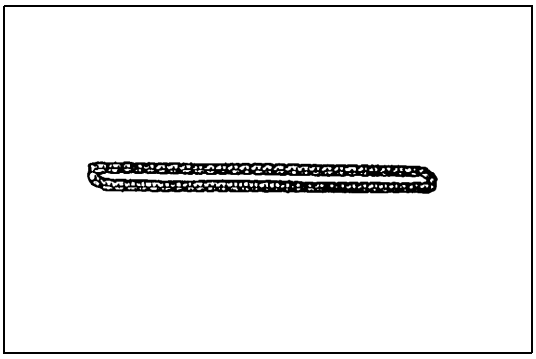

Timing chain

- Check timing chain for wear or damage.

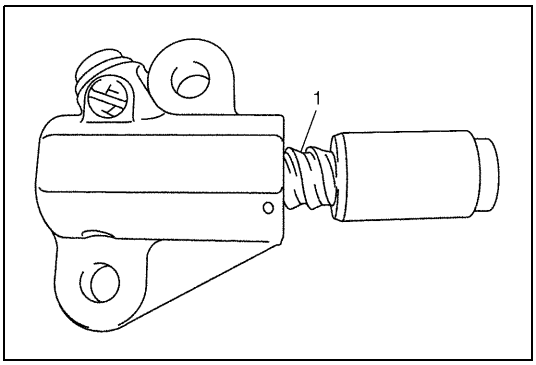

Timing chain tensioner adjuster

- Check that tooth surface (1) are free from damage.

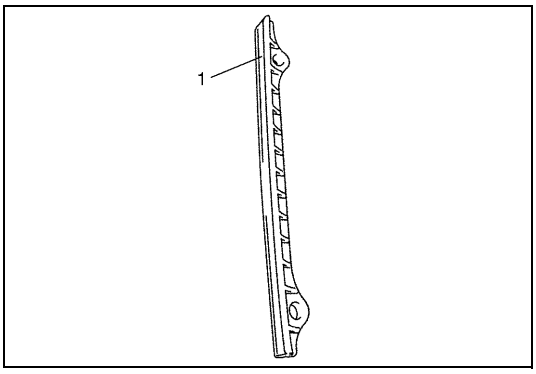

Timing chain No.1 guide

- Check shoe (1) for wear or damage.

INSTALLATION

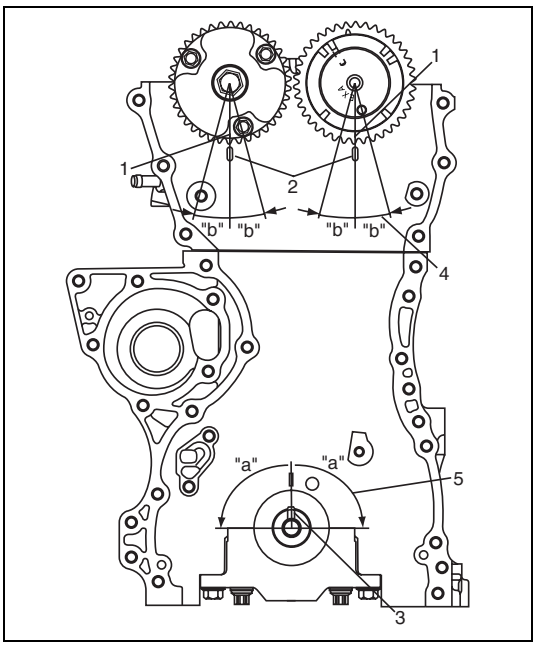

CAUTION:

After timing chain is removed, never turn crankshaft and camshafts independently more than such an extent (“a”, “b”) as shown in figure.

If turned, interference may occur between piston and valves and valves themselves, and parts related to piston and valves may be damaged.

1) Check that match marks (1) on intake and exhaust camshaft timing sprockets are in match with notches (2) on cylinder head as shown in figure.
2) Check that key on crankshaft timing sprocket is in match with notch on cylinder block as shown in figure.

“a” : 90°	5. Crankshaft allowable turning range. By key on crankshaft, within 90° from top on both right and left.
“b” : 15°	4. Camshaft (IN and EX) allowable turning range. By marks on camshaft timing sprocket within 15° from notches on cylinder head on both right and left.

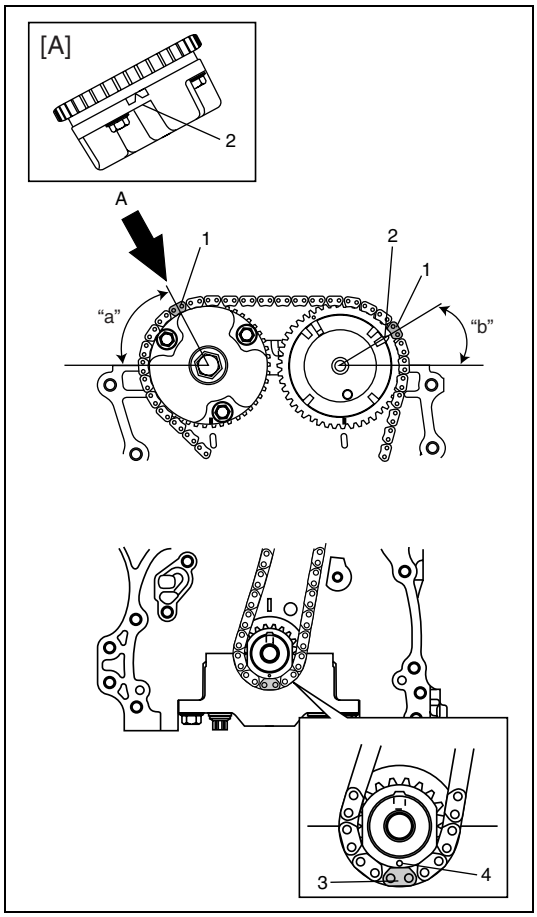

3) Install timing chain by aligning dark blue plate (1) of timing chain and triangle mark (2) on camshaft timing sprocket as shown in figure.
4) Fit crankshaft timing sprocket to timing chain by aligning gold plate (3) of timing chain and circle mark (4) on crankshaft timing sprocket. Then install crankshaft timing sprocket fitted with chain to crankshaft.

[A] :	View A
"a" :	Approx 60°
"b" :	Approx 30°

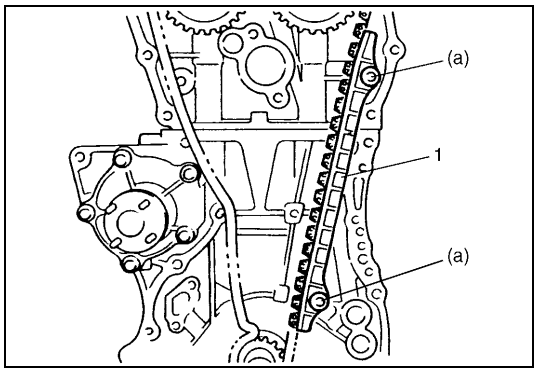

5) Apply engine oil to sliding surface of timing chain No.1 guide (1) and install it as shown in figure.
Tighten guide bolts to specified torque.

Tightening torque
Timing chain No.1 guide bolts
(a) : 9 N·m (0.9 kg-m, 6.5 lb-ft)

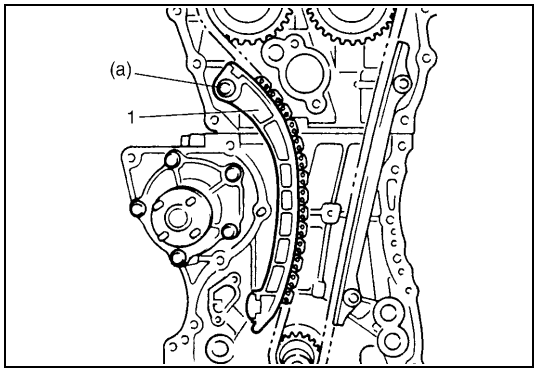

6) Apply engine oil to sliding surface of chain tensioner (1) and install chain tensioner and spacer.
Tighten tensioner bolt to specified torque

Tightening torque
Timing chain tensioner bolt
(a) : 22 N·m (2.2 kg-m, 16.0 lb-ft)

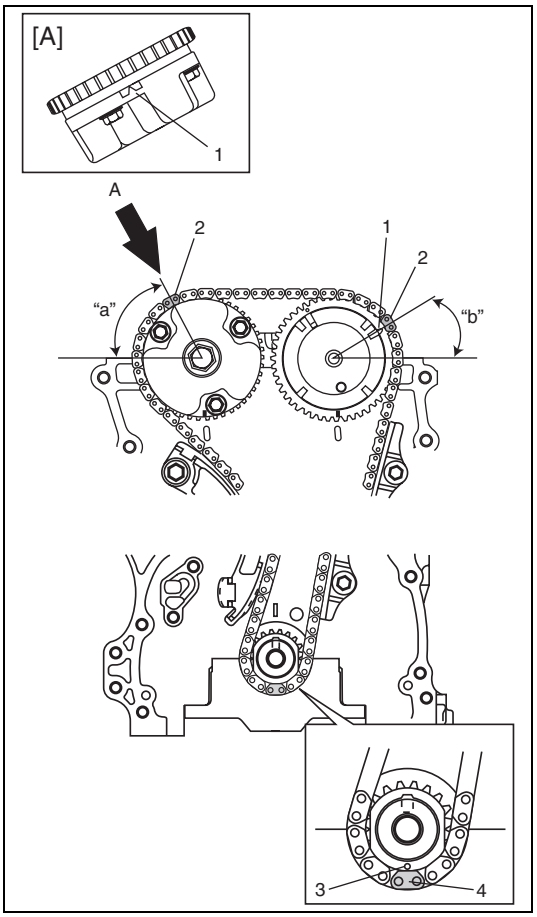

7) Check that match marks (1) on intake and exhaust camshaft timing sprockets are in match with marking of timing chain (2) and match mark on crankshaft timing sprocket (3) are in with marking of timing chain (4).

[A] :	View A
"a" :	Approx 60°
"b" :	Approx 30°

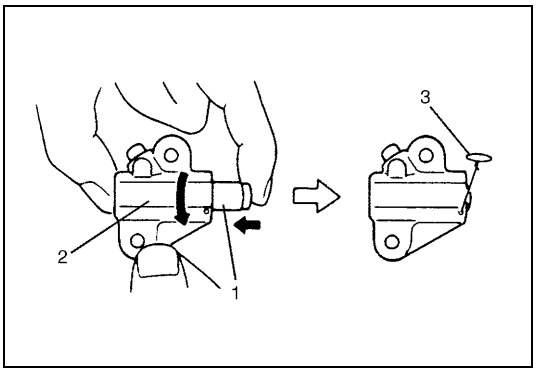

8) Screw in plunger (1) by turning timing chain tensioner adjuster (2) in arrow direction and install a retainer (3) (wire) to hold plunger in place.

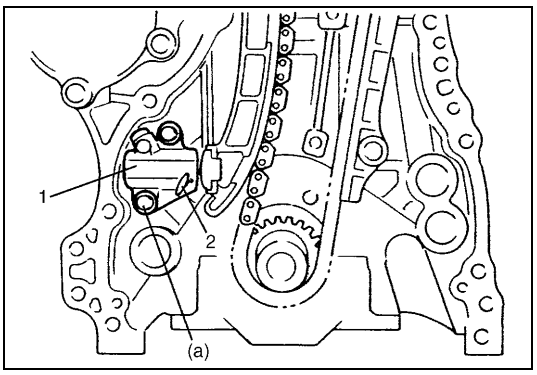

9) Install timing chain tensioner adjuster assembly (1) with a retainer (2).
Tighten adjuster bolts to specified torque and then remove a retainer from chain tensioner adjuster assembly.

Tightening torque
Timing chain tensioner adjuster bolts
(a) : 11 N·m (1.1 kg-m, 8.0 lb-ft)

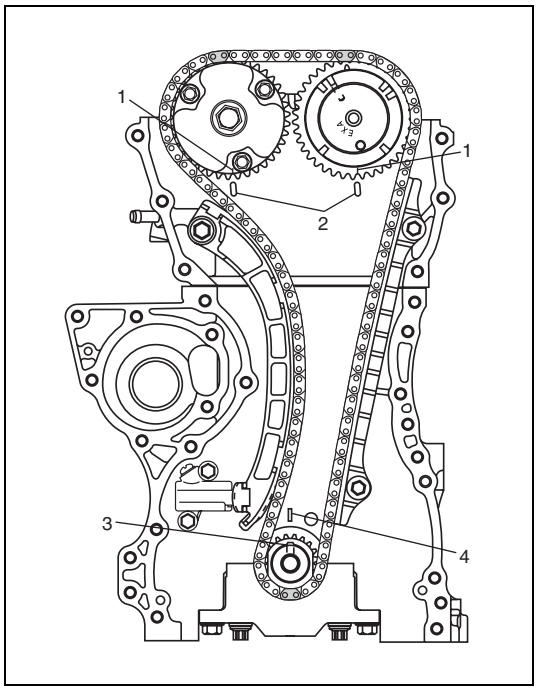

10) Apply engine oil to timing chain, and then turn crankshaft clockwise by 2 revolutions and check that match marks (1) on intake and exhaust camshaft timing sprockets are in match with notches (2) on cylinder head and key (3) is in match with notch (4) on cylinder block as shown in figure.
    If each marking chain and each match mark are no matches, adjust each sprockets and timing chain.
11) Install timing chain cover referring to “Timing Chain Cover” in this section.
12) Perform Steps 12) to 17) of “INSTALLATION” of “Timing Chain Cover” in this section.

Camshaft, Tappet and Shim

CAUTION:
- **Keep working table, tools and hands clean while over hauling.**
- **Use special care to handle aluminium parts so as not to damage them.**
- **Do not expose removed parts to dust. Keep them always clean.**

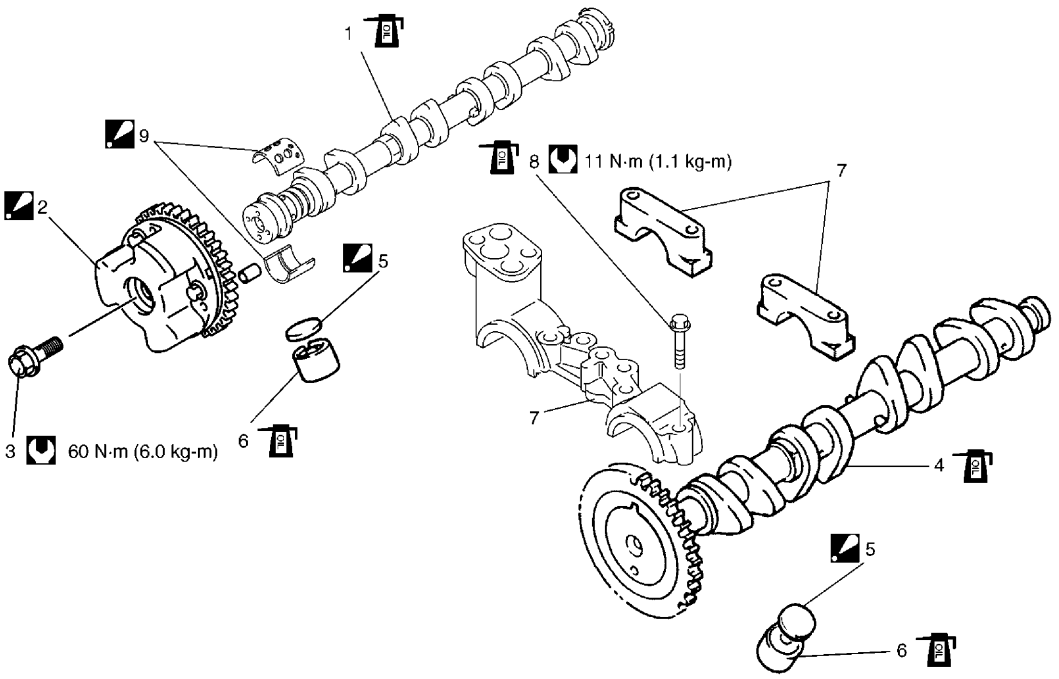

	1. Intake camshaft		5. Shim : Shim No. on it faces tappet side.		9. Camshaft bearing : Install a bearing half with some holes to upper side of intake camshaft No.1 bearing.
	2. Intake camshaft sprocket assembly : Never disassemble intake camshaft sprocket assembly.		6. Tappet		Tightening torque
	3. Intake camshaft sprocket bolt		7. Camshaft housing		Apply engine oil to sliding surface of each part.
	4. Exhaust camshaft		8. Camshaft housing bolt		

REMOVAL

1) Remove cylinder head cover and oil pan referring to “Cylinder Head Cover” and “Oil Pan and Oil Pump Strainer” in this section.
2) Remove timing chain cover referring to “Timing Chain Cover” in this section.
3) Remove timing chain referring to “Timing Chain and Chain Tensioner” in this section.

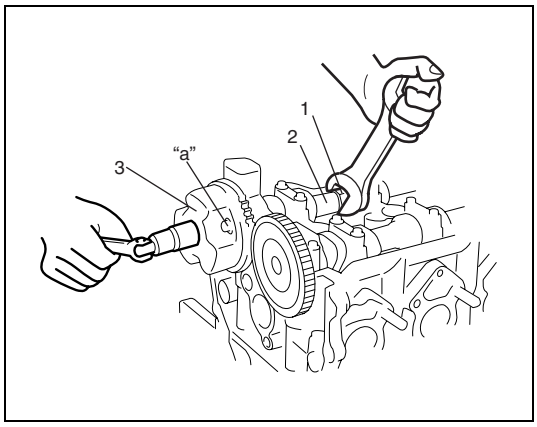

4) With hexagonal section (1) of intake camshaft (2) held stationary with spanner or the like, loosen mounting bolt of intake cam timing sprocket assembly (3) and remove it.

CAUTION:

- **Never attempt to loosen intake camshaft sprocket bolt with intake cam timing sprocket assembly held stationary. Failure to follow this could result in damage to lock pin.**
- **Do not loosen bolt "a" because intake cam timing sprocket assembly is not serviceable.**

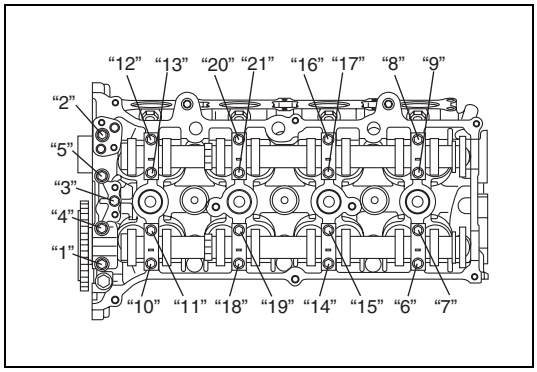

5) Loosen camshaft housing bolts in such order as indicated in figure and remove them.
6) Remove camshaft housings.
7) Remove intake and exhaust camshafts.

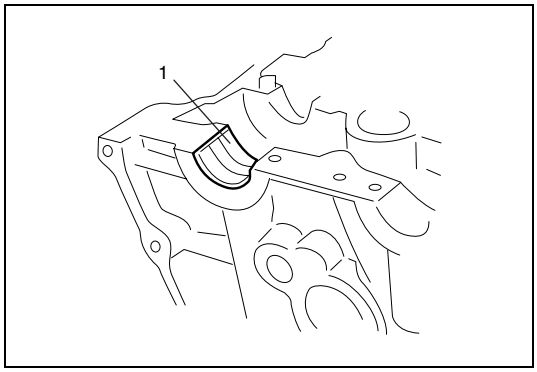

8) Remove camshaft bearings (1) from cylinder head and camshaft No.1 housing.

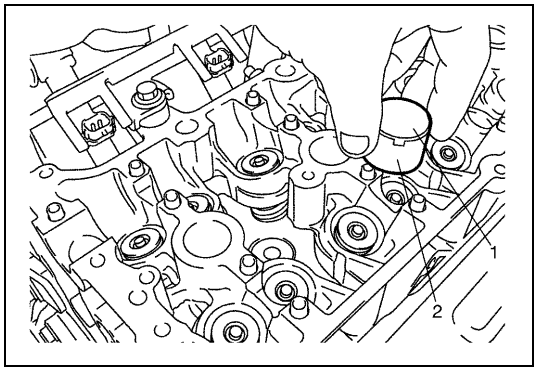

9) Remove tappets (2) with shims (1).

INSPECTION

Intake Cam Timing Sprocket Assembly

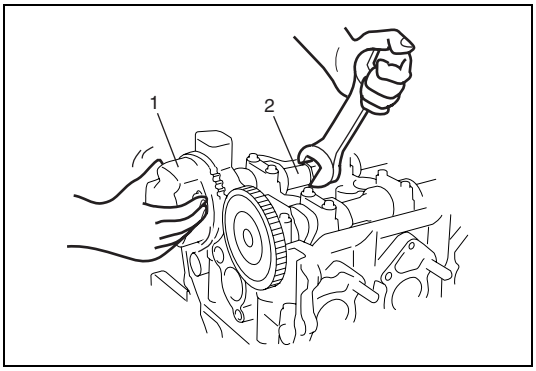

Fit intake cam timing sprocket assembly to camshaft (2) and hold hexagonal section of camshaft by using spanner or the like.
Check if sprocket (1) is not turned by hand.
If moved, replace intake cam timing sprocket assembly.

Cam Wear

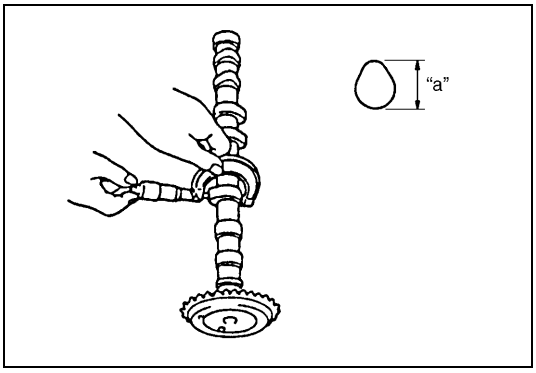

Using a micrometer, measure cam height "a". If measured height is below its limit, replace camshaft.

Cam height "a" of camshaft

	Standard	Limit
Intake cam	**44.929 – 45.089 mm (1.769 – 1.775 in.)**	**44.80 mm (1.764 in.)**
Exhaust cam	**44.399 – 44.559 mm (1.748 – 1.754 in.)**	**44.28 mm (1.743 in.)**

Camshaft Runout

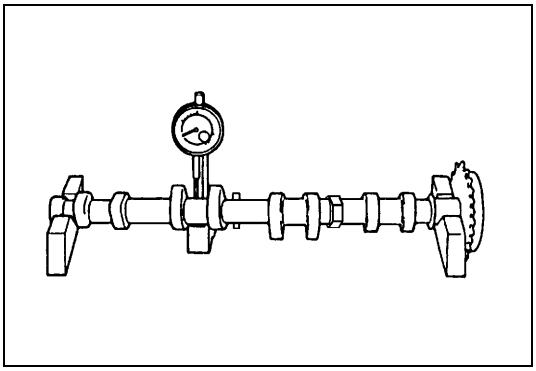

Set camshaft between two "V" blocks, and measure its runout by using a dial gauge.
If measured runout exceeds below limit, replace camshaft.

Camshaft runout limit
0.10 mm (0.0039 in.)

Camshaft Journal Wear

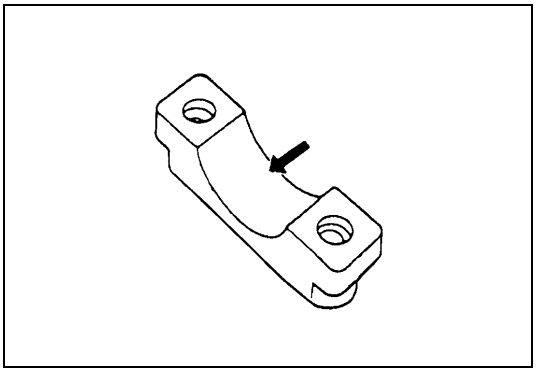

Check camshaft journals and camshaft housings for pitting, scratches, wear or damage.
If any malcondition is found, replace camshaft or cylinder head with housing. Never replace cylinder head without replacing housings.

Check clearance by using gauging plastic. Checking procedure is as follows.

1) Clean housings and camshaft journals.
2) Remove all tappets with shims.

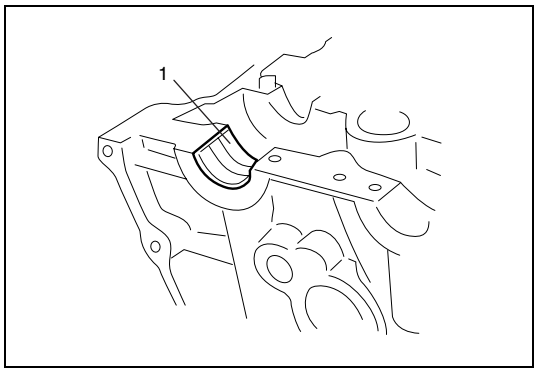

3) Install camshaft bearings (1) to cylinder head and camshaft No.1 housing.

CAUTION:
Do not apply engine oil to camshaft bearing back.
Only a upper half bearing of intake camshaft bearing No.1 has some holes. Other bearings.

4) Install camshafts to cylinder head.
5) Place a piece of gauging plastic to full width of journal of camshaft (parallel to camshaft).
6) Install camshaft housing.

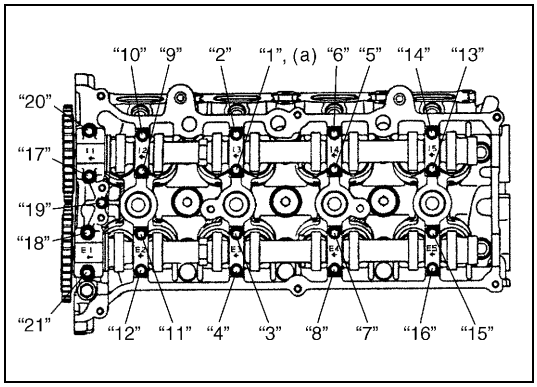

7) Tighten camshaft housing bolts in such order as indicated in figure a little at a time till they are tightened to specified torque.

NOTE:
Do not rotate camshaft while gauging plastic is installed.

Tightening torque
Camshaft housing bolts (a) : 11 N·m (1.1 kg-m, 8.0 lb-ft)

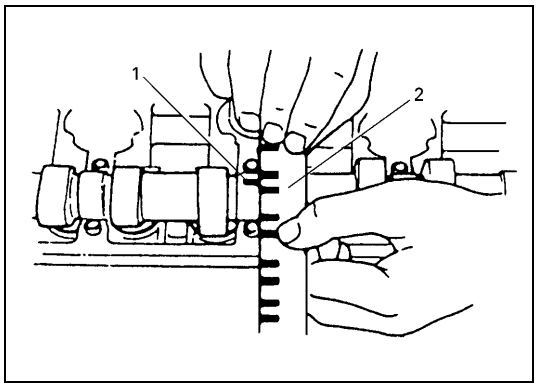

8) Remove housing, and using scale (2) on gauging plastic (1) envelop, measure gauging plastic width at its widest point.

Camshaft journal clearance

	Standard	Limit
Intake side No.1 housing	**0.020 – 0.072 mm (0.0008 – 0.0028 in.)**	**0.10 mm (0.0039 in.)**
Others	**0.045 – 0.087 mm (0.0018 – 0.0034 in.)**	**0.12 mm (0.0047 in.)**

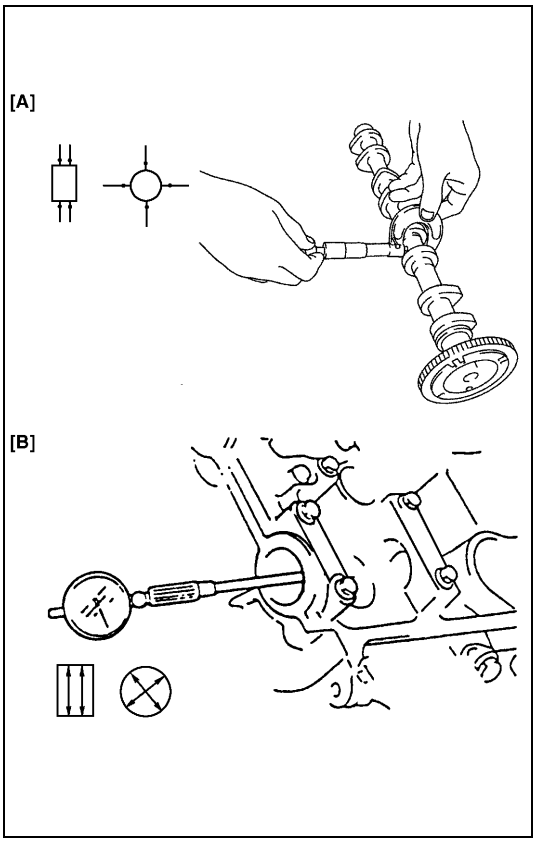

If measured camshaft journal clearance exceeds limit, measure journal (housing) bore and outside diameter of camshaft journal. Replace camshaft bearing, camshaft or cylinder head assembly whichever the difference from specification is greater.

Camshaft journal outside diameter [A]

Item	Standard
Intake side No.1 housing	26.940 – 26.955 mm (1.0606 – 1.0612 in.)
Exhaust side No.1 housing	26.934 – 26.955 mm (1.0604 – 1.0612 in.)
Others	22.934 – 22.955 mm (0.9029 – 0.9037 in.)

Camshaft journal bore diameter [B]

Item	Standard
Intake side No.1 housing	–
Exhaust side No.1 housing	27.000 – 27.021 mm (1.0630 – 1.0638 in.)
Others	23.000 – 23.021 mm (0.9055 – 0.9063 in.)

Wear of Tappet and Shim

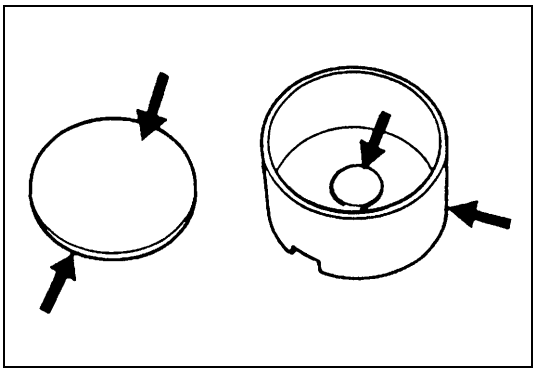

Check tappet and shim for pitting, scratches or damage.
If any malcondition is found, replace.

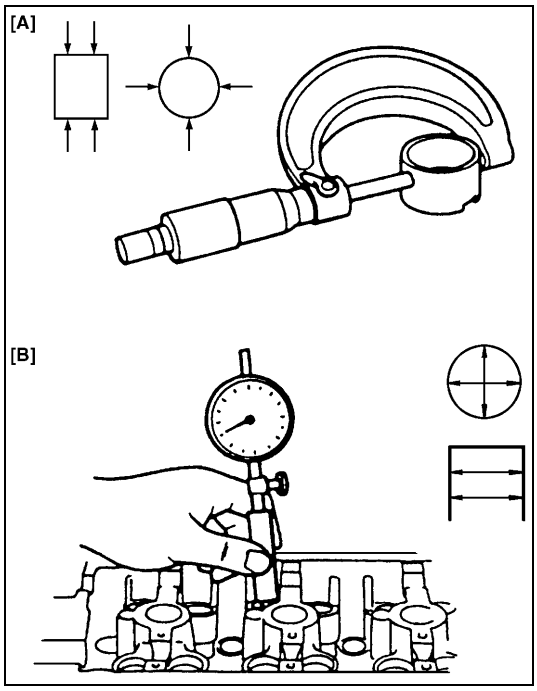

Measure cylinder head bore and tappet outside diameter to determine cylinder head-to-tappet clearance.
If clearance exceeds limit, replace tappet or cylinder head.

Cylinder head to tappet clearance
Standard : 0.025 – 0.066 mm (0.0010 – 0.0026 in.)
Limit : 0.15 mm (0.0059 in.)

Tappet outside diameter [A]
Standard : 30.959 – 30.975 mm (1.2189 – 1.2195 in.)

Cylinder head tappet bore [B]
Standard : 31.000 – 31.025 mm (1.2205 – 1.2215 in.)

INSTALLATION

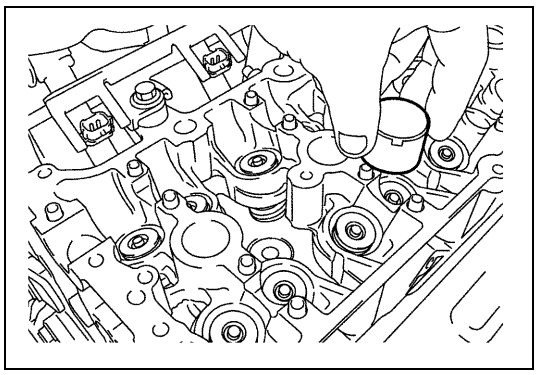

1) Install tappets and shims to cylinder head.
   Apply engine oil around tappet, and then install it to cylinder head.

NOTE:

When installing shim, make sure to direct shim No. side toward tappet.

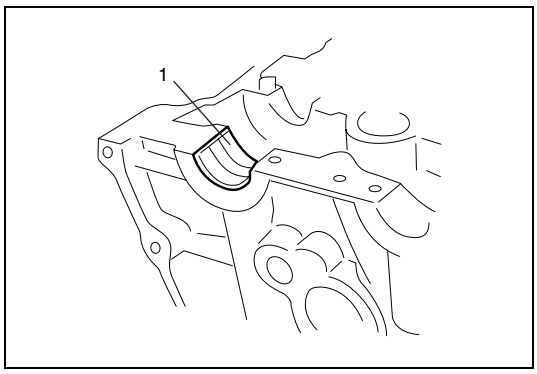

2) Install camshaft bearings (1) to cylinder head and camshaft No.1 housing.

CAUTION:

Do not apply engine oil to camshaft bearing back.
Only a upper half bearing of intake camshaft bearing No.1 has some holes.

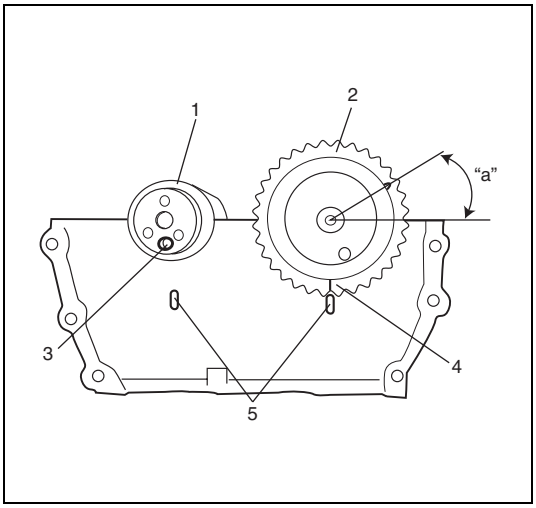

3) Install intake camshaft (1) and exhaust camshaft (2).
   Align knock pin (3) and match mark (4) with notches (5) as shown in the figure.

"a" : Approx 30°

NOTE:

Check that key on crankshaft timing sprocket is in match with notch on cylinder block referring to "INSTALLATION" of "Timing Chain and Chain Tensioner" in this section.

4) Apply engine oil to sliding surface of each camshaft and camshaft journal, then install them as shown in figure.

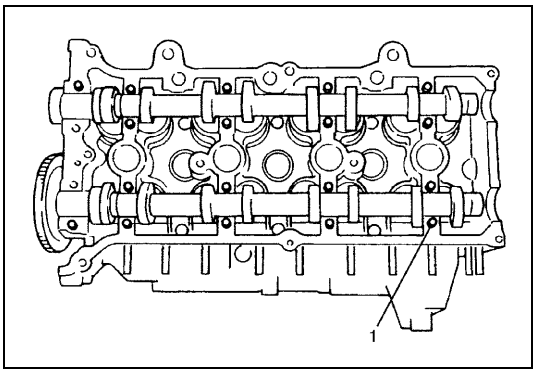

5) Install camshaft housing pins (1) as shown in figure.

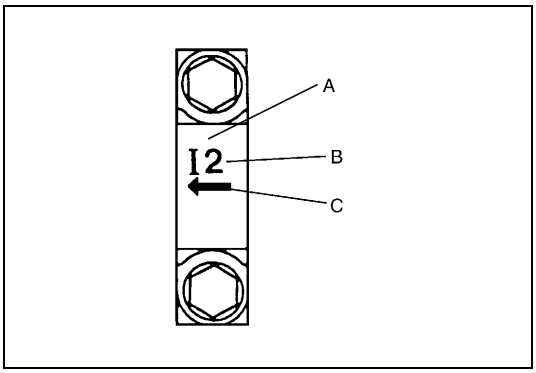

6) Check position of camshaft housings.
   Embossed marks are provided on each camshaft housing, indicating position and direction for installation. Install housings as indicated by these marks.

A. I : Intake side or E : Exhaust side
B. Position from timing chain side
C. Pointing to timing chain side

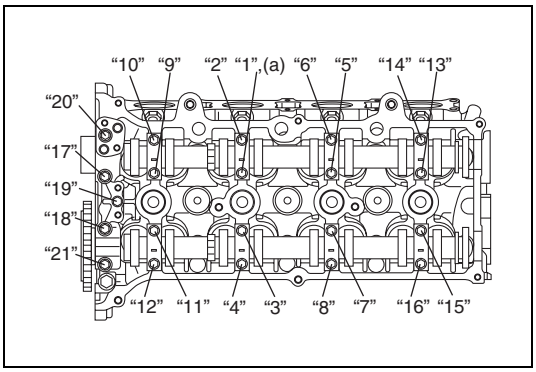

7) After applying engine oil to housing bolts, tighten them temporarily first. Then tighten them by the numerical order in figure. Tighten a little at a time and evenly among bolts and repeat tightening sequence two or three times before they are tightened to specified torque.

Tightening torque
Camshaft housing bolts (a) : 11 N·m (1.1 kg-m, 8.0 lb-ft)

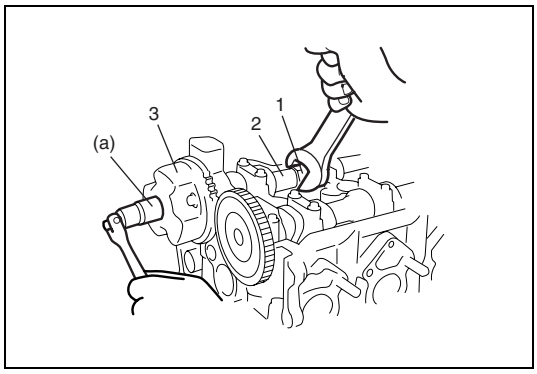

8) With hexagonal section (1) of intake camshaft (2) held stationary with spanner or the like, tighten bolt of intake cam timing sprocket assembly (3) to specification.

Tightening torque
Intake cam timing sprocket bolts
(a) : 60 N·m (6.0 kg-m, 43 lb-ft)

9) Install timing chain with crankshaft sprocket referring to “Timing Chain and Chain Tensioner” in this section.
10) Install timing chain cover referring to “Timing Chain Cover” in this section.
11) Check valve lashes referring to “Valve Lash” in this section.
12) Install cylinder head cover and oil pan referring to “Cylinder Head Cover” and “Oil Pan and Oil Pump Strainer” in this section.
13) Install radiator with cooling fan and connect A/T fluid hoses (vehicle with A/T), radiator inlet and outlet hoses referring to “Water Pump Belt and Cooling Fan” and “Radiator” in Section 6B.
14) Adjust generator belt tension referring to “Water Pump Belt Tension” in Section 6B.
15) Adjust A/C compressor and/or P/S pump belt tension (if equipped) referring to “Compressor Drive Belt” in Section 1B or “Power Steering Belt” in Section 3B1.
16) Refill cooling system with coolant, engine with engine oil and A/T with specified A/T fluid (vehicle with A/T).
17) Verify that there is no coolant leakage, oil leakage and A/T fluid leakage (vehicle with A/T) at each connection.

Required Service Material

Material	Recommended SUZUKI product (Part Number)	Use
Sealant	SUZUKI BOND NO. 1207F (99000-31250)	• To apply to mating surface of cylinder block and timing chain cover. • To apply to sealing surface of cylinder head cover. • To apply to mating surface to rear oil seal housing.
	SUZUKI BOND NO. 1207B (99000-31140)	• To apply to mating surface of cylinder block, cylinder head and timing chain cover.
	SUZUKI BOND NO. 1215 (99000-31110)	• To flywheel (M/T) or drive plate (A/T) bolts.
	SUZUKI BOND NO. 1217G (99000-31260)	• To apply to mating surface of cylinder block and oil pan. • To apply to mating surface of cylinder block, cylinder head and timing chain cover.

Tightening Torque Specification

Fastening part	Tightening torque		
	N•m	kg-m	lb-ft
Oil pressure switch	14.0	1.4	10.5
Camshaft housing bolts (for replacement of shim)	8.0	0.8	6.0
Camshaft housing bolts	11.0	1.1	8.0
Cylinder head cover bolts	8.0	0.8	6.0
Intake manifold bolts and nuts	25.0	2.5	18.0
Exhaust manifold bolts and nuts	55.0	5.5	40.0
Exhaust pipe bolts	50.0	5.0	36.5
Exhaust manifold stiffener bolts	50.0	5.0	36.5
Oil pump strainer bolt	11.0	1.1	8.0
Oil pump strainer bracket bolt	11.0	1.1	8.0
Oil pan bolts and nuts	11.0	1.1	8.0
Oil pan drain plug	50.0	5.0	36.5
Oil control valve mounting nut	11.0	1.1	8.0
Oil gallery pipe No.1 bolt	30.0	3.0	21.5
Timing chain cover bolts and nut	23.0	2.3	17.0
Water pipe bolt	25.0	2.5	18.0
Oil gallery pipe No.2 and No.3 bolt	11.0	1.1	8.0
Crankshaft pulley bolt	150.0	15.0	108.5
Oil pump rotor plate bolts	11.0	1.1	8.0
Timing chain No.1 guide bolts	9.0	0.9	6.5
Intake cam timing sprocket bolt	60.0	6.0	43.0
Timing chain tensioner adjuster bolts	11.0	1.1	8.0
Venturi plug	5.0	0.5	3.5
Cylinder head bolt for M8	22.0	2.2	16.0

Fastening part	Tightening torque		
	N•m	kg-m	lb-ft
Cylinder head bolts for M10	a) Tighten 40 N·m b) Turn 60° c) Turn 60°	a) Tighten 4.0 kg-m b) Turn 60° c) Turn 60°	a) Tighten 29.0 lb-ft b) Turn 60° c) Turn 60°
Connecting rod bearing cap nuts	a) Tighten 15 N·m b) Turn 45° c) Turn 45°	a) Tighten 1.5 kg-m b) Turn 45° c) Turn 45°	a) Tighten 11.0 lb-ft b) Turn 45° c) Turn 45°
Engine mounting bolts	50.0	5.0	36.5
Crankshaft bearing cap No.1 bolts (for inspection of crankshaft thrust play)	50.0	5.0	36.5
Crankshaft bearing cap No.2 bolts	22.0	2.2	16.0
Sensor plate bolts	11.0	1.1	8.0
Crankshaft bearing cap No.1 bolts	a) Tighten 50 N·m b) Turn 60°	a) Tighten 5.0 kg-m b) Turn 60°	a) Tighten 36.5 lb-ft b) Turn 60°
Rear oil seal housing bolts	11.0	1.1	8.0
Flywheel or drive plate bolts	70.0	7.0	51.0
Torque converter bolts	20.0	2.0	14.5
Timing chain tensioner bolt	22.0	2.2	16.0
Knock sensor	23.0	2.3	16.5
Cylinder block and transmission fastening bolts and nuts (vehicle with M/T)	94.0	9.4	68.0
Cylinder block and transmission fastening bolts and nuts (vehicle with A/T)	80.0	8.0	58.0

Special Tool

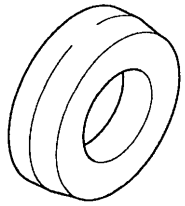 09911-97720 Oil seal guide	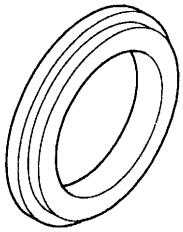 09911-97820 Oil seal installer	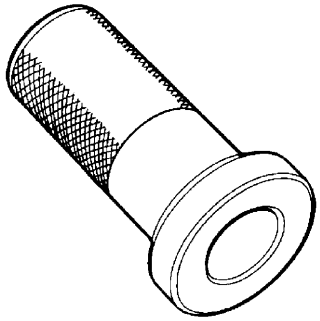 09913-75810 Bearing installer	 09915-64510-001 Compression gauge
 09915-64510-002 Connector	 09915-64530 Hose	 09915-67010 Attachment	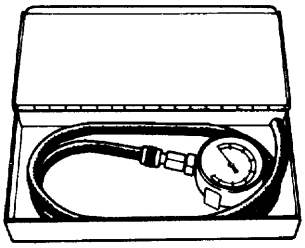 09915-67311 Vacuum gauge
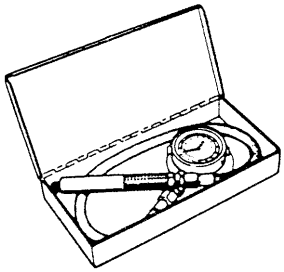 09915-77311 Oil pressure gauge	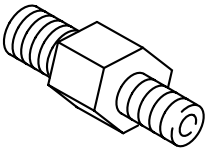 09915-78211 Oil pressure gauge attachment	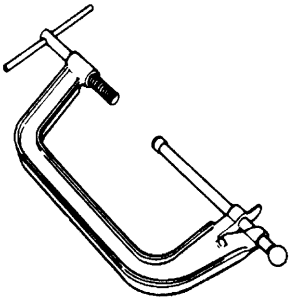 09916-14510 Valve lifter	 09916-14521 Valve lifter attachment
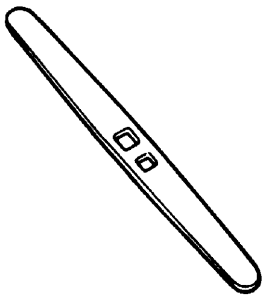 09916-34542 Reamer handle	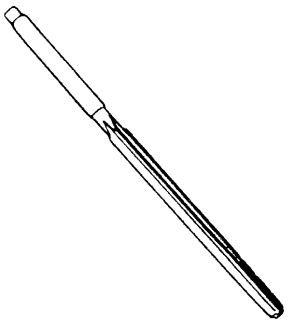 09916-34550 Reamer (5.5 mm)	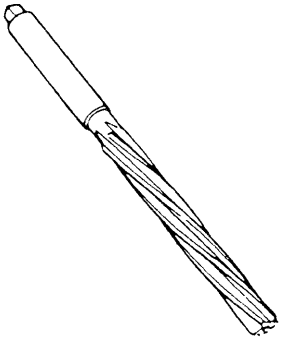 09916-37320 Reamer (10.5 mm)	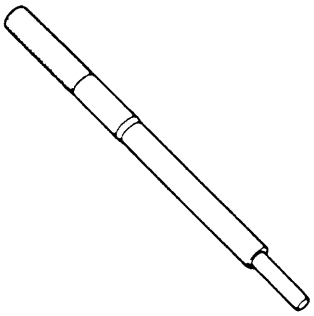 09916-44910 Valve guide remover

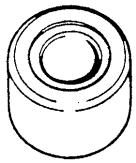 09916-56011 Valve guide installer attachment	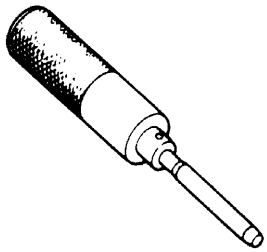 09916-58210 Valve guide installer handle	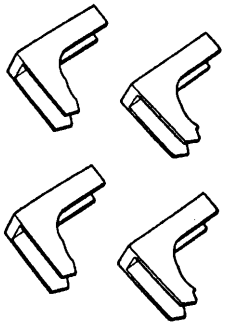 09916-67020 Tappet holder	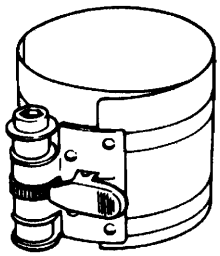 09916-77310 Piston ring compressor
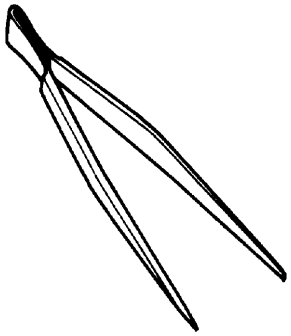 09916-84511 Forceps	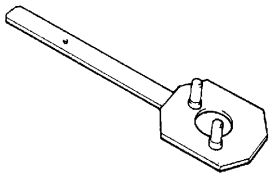 09917-68221 Camshaft lock holder	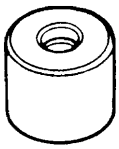 09917-98221 Valve stem seal installer	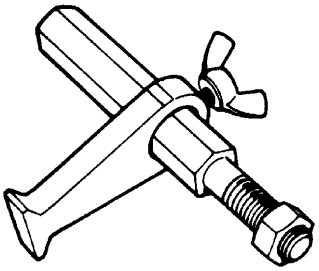 09924-17811 Flywheel holder
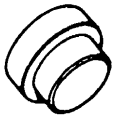 09926-58010 Bearing puller attachment	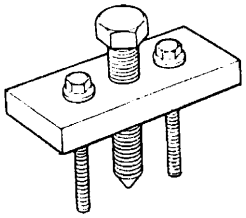 09944-36011 Steering wheel remover		

SECTION 6C

ENGINE FUEL (M13 ENGINE)

CAUTION:

For vehicles with a catalytic converter, be sure to use unleaded fuel only. Use of leaded and/or low lead fuel can result in engine damage and reduce the effectiveness of the emission control system.

NOTE:

For the items with asterisk (*) in the "CONTENTS" below, refer to the same section of the Service Manual mentioned in "FOREWORD" of this manual.

CONTENTS

General Description 6C-2
Fuel System 6C-2
Fuel Tank ..... 6C- *
Fuel Pump Assembly ..... 6C- *
Fuel Filler Cap ..... 6C- *
On-Vehicle Service 6C-3
Fuel Lines ..... 6C- *
Fuel Filler Cap ..... 6C- *
Fuel Tank 6C-3
Fuel Pump Assembly ..... 6C- *
Tightening Torque Specification 6C-5
Special Tool ..... 6C- *

General Description

Fuel System

The main components of the fuel system are fuel tank, fuel pump assembly with fuel filter and fuel level gauge and fuel cut valve, fuel feed line, fuel return line and fuel vapor line.
For the details of fuel flow and fuel vapor flow, refer to “Fuel Delivery System” and “Emission Control System” in Section 6E.

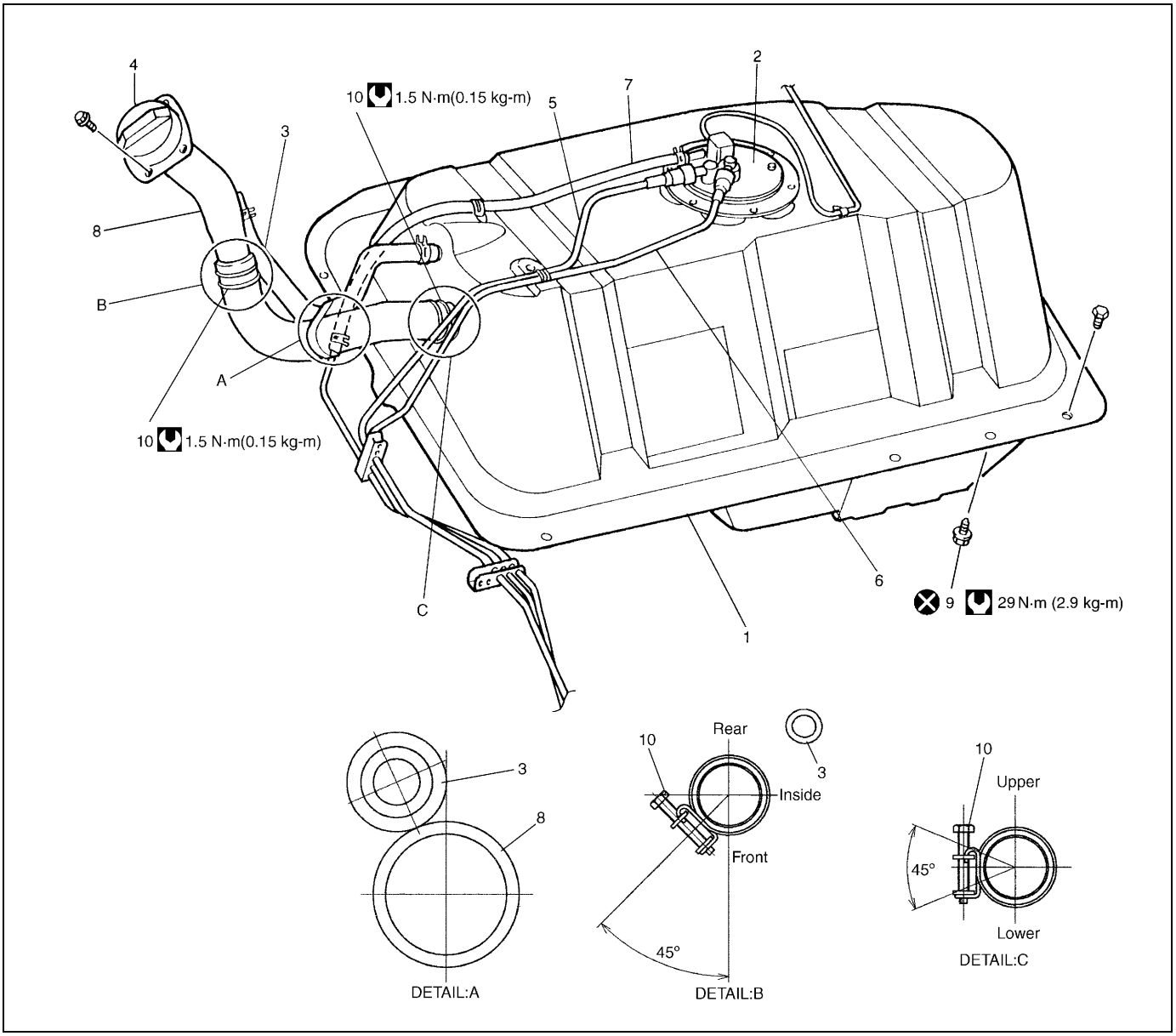

1. Fuel tank	4. Fuel filler cap	7. Fuel vapor line	10. Fuel filler hose clamp
2. Fuel pump assembly	5. Fuel feed line	8. Fuel filler neck	Tightening torque
3. Breather hose	6. Fuel return line	9. Fuel tank mounting bolt	Do not reuse.

On-Vehicle Service

Before work, refer to “Precaution on fuel system service” under “Precaution” in Section 6-1 or Section 6-3.

Fuel Tank

REMOVAL

WARNING:

- **Before starting the following procedure, be sure to observe “Precaution on fuel system service” under “Precaution” in Section 6-1 or Section 6-3.**
- **Keep fuel tank horizontally and stably when removing it. Fuel may come out if tank is tilted. Also, fuel tank may drop and cause personal injury.**

1) Relieve fuel pressure in fuel feed line referring to “Fuel pressure relief procedure” under “Precaution” in Section 6-1 or Section 6-3.
2) Disconnect negative cable at battery.
3) Remove fuel filler cap.

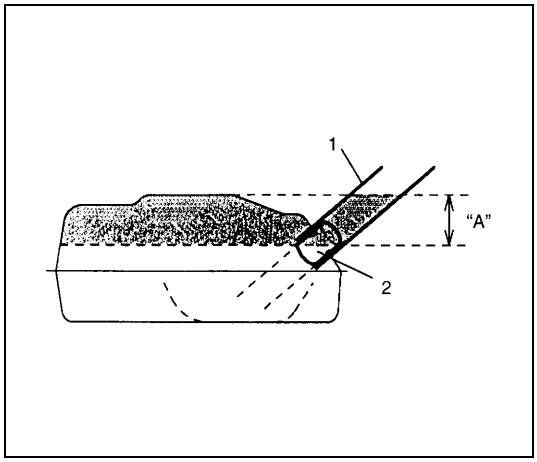

4) Insert hose of a hand operated pump into fuel filler hose (1) and drain fuel in space “A” in the figure (drain fuel through it till fuel stops).

CAUTION:

Do not force hose of a hand operated pump into fuel tank. Doing so can damage inlet valve (2).

5) Hoist vehicle.
6) Remove exhaust center pipe referring to “Components” in Section 6K and rear propeller shaft referring to “Propeller Shafts” in Section 4B.

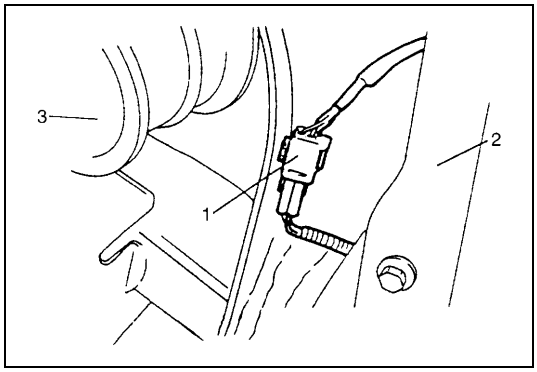

7) Disconnect coupler (1) for fuel pump assembly.
   The coupler is close by left rear suspension coil spring (3).

2. Fuel tank

8) Remove fuel tank filler hose protector.
   Disconnect filler hose and breather hose from fuel filler neck.
9) Disconnect fuel vapor hose from pipe.
10) With fuel tank supported on a jack, remove fuel tank bolts.

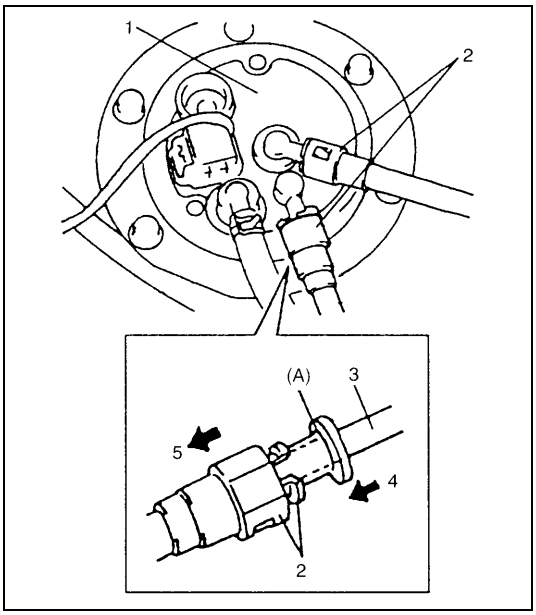

11) Lower fuel tank a little and hold it. Unclamp fuel hoses and disconnect them from fuel pump assembly (1).
When disconnecting joints of fuel feed line and return line from pipe, unlock joint by inserting special tool between pipe (3) and joint lock first.

Special tool
(A) : 09919-47020

2. Quick joint	5. Disconnect joint
4. Insert special tool	

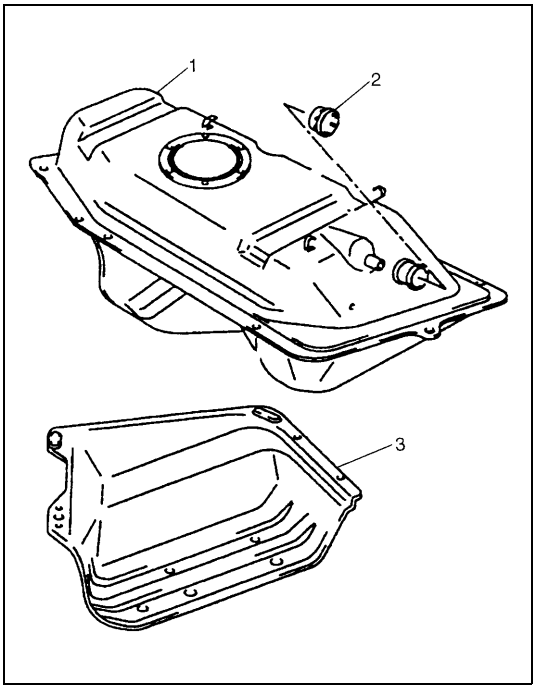

12) Remove fuel tank (1) from vehicle. Remove fuel tank protector (3) and inlet valve (2) as necessary.

FUEL TANK PURGING PROCEDURE

CAUTION:
This purging procedure will not remove all fuel vapor. Do not attempt any repair on tank where heat or flame is required, as an explosion resulting in personal injury could occur.

The following procedure is used for purging the fuel tank.

1) After removing fuel tank, remove all hoses and fuel pump assembly from fuel tank.
2) Drain all remaining fuel from tank.
3) Move tank to flushing area.

4) Fill tank with warm water or tap water, and agitate vigorously and drain. Repeat this washing until inside of tank is clean. Replace tank if its inside is rusty.
5) Completely flush out remaining water after washing.

INSTALLATION

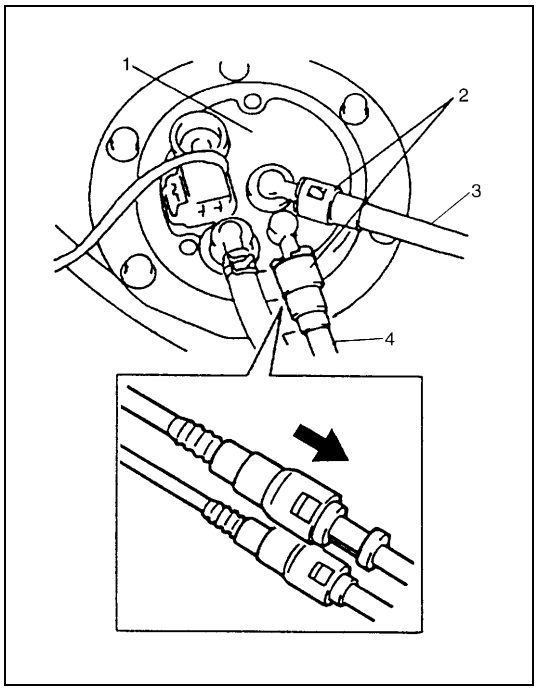

1) Install fuel pump (1) assembly to fuel tank. Refer to “Fuel Pump Assembly” in this section. Install protector to fuel tank.
2) Install inlet valve to fuel tank.
   If deformed or damaged in any other way, replace with a new one.
3) Connect fuel filler and breather hoses to fuel tank and vapor hose to fuel pump assembly. Clamp them securely.
4) Lift up fuel tank on jack.
   Connect fuel feed hose (4) and return hose (3) to pipes as shown in figure and clamp them securely.

CAUTION:
When connecting joint, clean outside surfaces of pipe where joint is to be inserted, push joint into pipe till joint lock clicks and check to ensure that pipes are connected securely, or fuel leak may occur.

2. Quick joint

5) Install fuel tank to vehicle and tighten new fuel tank mounting bolts to specified torque.

Tightening torque
Fuel tank mounting bolt: 29 N·m (2.9 kg-m, 21.0 lb-ft)

6) Connect wire harness coupler.
7) Connect fuel filler hose and breather hose to fuel filler neck. Connect fuel vapor hose to pipe. Clamp them securely.
8) Install fuel filler hose protector.

Tightening Torque Specification

Fastening part	Tightening torque		
	N•m	kg-m	lb-ft
Fuel tank mounting bolt	29	2.9	21.0
Fuel pump assembly bolt	10	1.0	7.5

SECTION 6C2

ENGINE FUEL (K9K ENGINE)

WARNING:

For vehicles equipped with a Supplemental Restraint (Air Bag) System:

- **Service on and around the air bag system components or wiring must be performed only by an authorized SUZUKI dealer. Refer to "Air Bag System Components and Wiring Location View" under "General Description" in air bag system section in order to confirm whether you are performing service on or near the air bag system components or wiring. Please observe all WARNINGS and "Service Precautions" under "On-Vehicle Service" in air bag system section before performing service on or around the air bag system components or wiring. Failure to follow WARNINGS could result in unintentional activation of the system or could render the system inoperative. Either of these two conditions may result in severe injury.**
- **Technical service work must be started at least 90 seconds after the ignition switch is turned to the "LOCK" position and the negative cable is disconnected from the battery. Otherwise, the system may be activated by reserve energy in the Sensing and Diagnostic Module (SDM).**

NOTE:

For the items with asterisk (*) in the "CONTENTS" below, refer to the same section of the Service Manual mentioned in "FOREWORD" of this Manual.

CONTENTS

General Description ..... 6C2- *
On-Vehicle Service 6C2-2
Fuel System Components 6C2-2
Precautions ..... 6C2- *
Water Draining of Fuel Filter ..... 6C2- *
Air Bleeding of Fuel System ..... 6C2- *
Fuel Line Inspection ..... 6C2- *
Fuel Filler Cap Inspection ..... 6C2- *
Fuel Tank Components 6C2-3
Fuel Tank Removal and Installation 6C2-4
Fuel Tank Inspection ..... 6C2- *
Fuel Tank Purging Procedure ..... 6C2- *
Fuel Level Gauge Assembly Removal and Installation ..... 6C2- *
Fuel Pipe Removal and Installation ..... 6C2- *
Fuel Level Gauge Inspection ..... 6C2- *
Fuel Filter Removal and Installation ..... 6C2- *
Special Tool ..... 6C2- *
Tightening Torque Specification 6C2-6

On-Vehicle Service

CAUTION:

- **Do not expose removed fuel parts to dust. Keep them always clean.**
- **Be sure to read "Precautions in Fuel Delivery System" in Section 6E2 before disconnecting fuel line or removing fuel system part(s).**
  Failure to follow its instruction could result unneeded fuel system repairs.

Fuel System Components

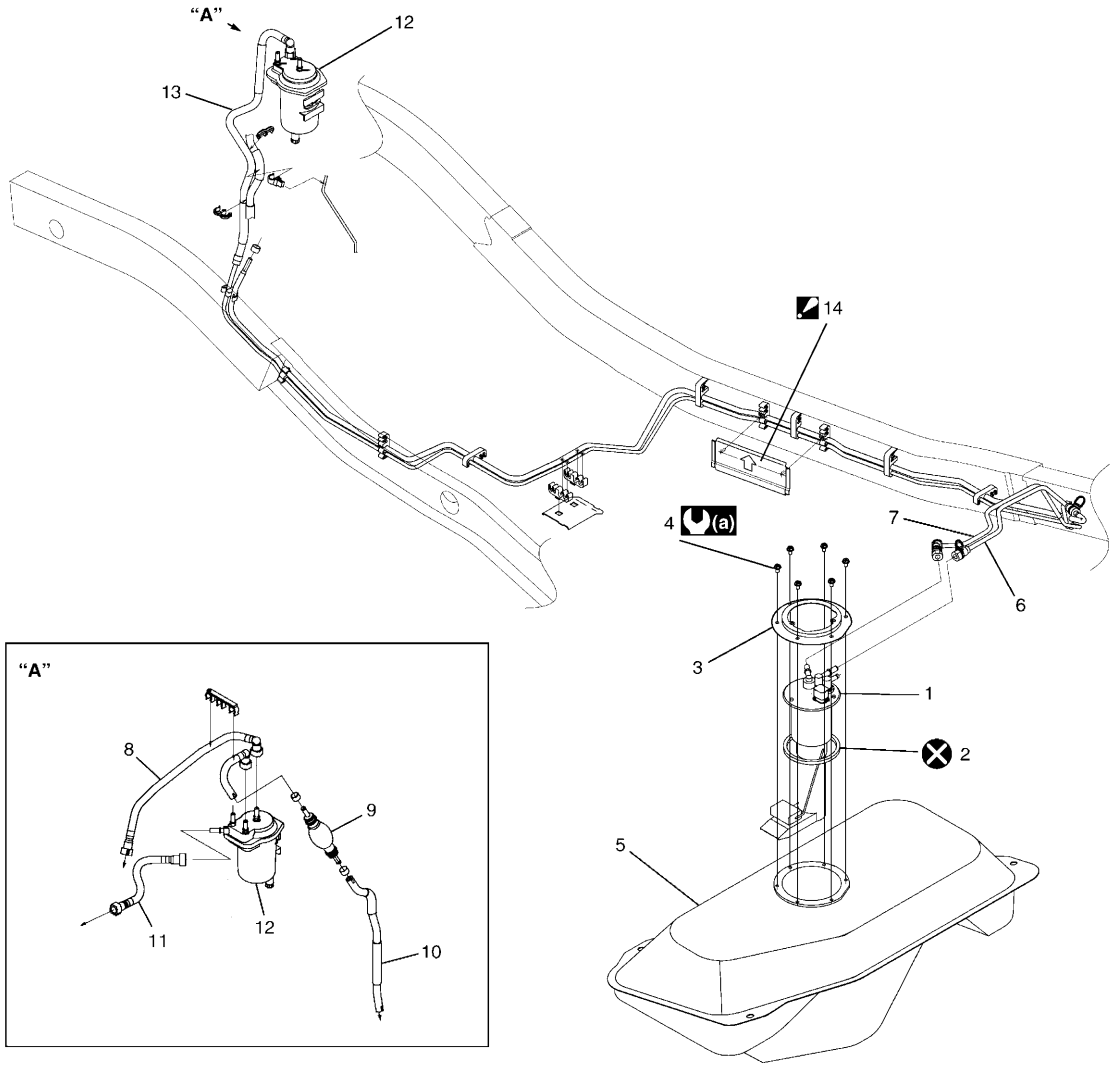

"A": View A	5. Fuel tank	10. Fuel feed hose No.1	(a) 10.5 N·m (1.05 kg-m, 7.5 lb-ft)
1. Fuel level gauge	6. Fuel feed line	11. Fuel return hose No.1	Do not reuse.
2. Fuel level gauge plate gasket	7. Fuel return line	12. Fuel filter	
3. Fuel level gauge plate	8. Fuel feed hose No.2	13. Fuel return hose No.2	
4. Fuel level gauge assembly bolt	9. Priming pump	14. Fuel pipe protector : Arrow must be pointing toward the upward of the vehicle.	

Fuel Tank Components

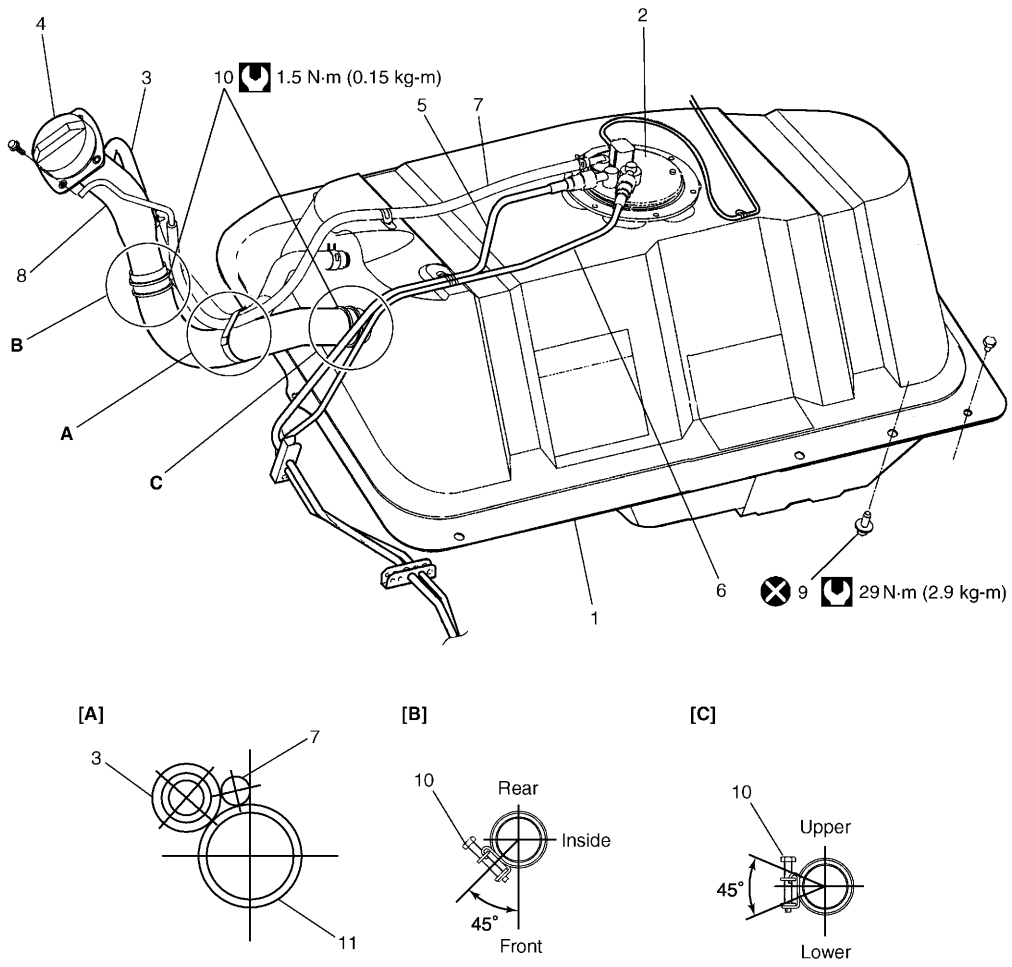

[A]: Detail: A	2. Fuel level gauge	6. Fuel return line	10. Fuel hose clamp
[B]: Detail: B	3. Breather hose	7. Fuel vapor line	11. Fuel filler hose
[C]: Detail: C	4. Fuel filler cap	8. Fuel filler neck	Tightening torque
1. Fuel tank	5. Fuel feed line	9. Fuel tank mounting bolt	Do not reuse.

Fuel Tank Removal and Installation

Removal

WARNING:

- **Before starting the following procedure, be sure to observe "Precautions in Fuel Delivery System" in Section 6E2.**
- **Keep fuel tank horizontally and stably when removing it. Fuel may come out if tank is tilted. Also, fuel tank may drop and cause personal injury.**

1) Disconnect negative (–) cable at battery.
2) Remove fuel filler cap.

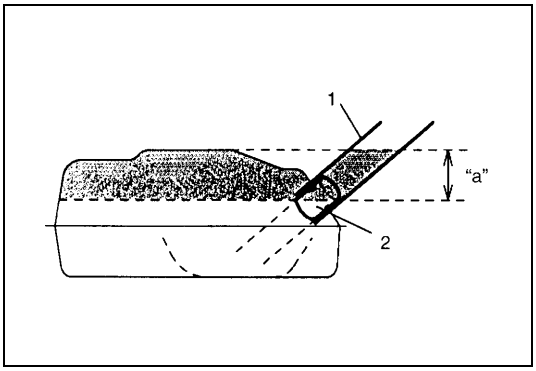

3) Insert hose of a hand operated pump into fuel filler hose (1) and drain fuel in space "a" in the figure (drain fuel through it till fuel stops).

CAUTION:

Do not force hose of a hand operated pump into fuel tank. Doing so can damage inlet valve (2).

4) Hoist vehicle.
5) Remove exhaust center pipe referring to "Components" in Section 6K2 and rear propeller shaft referring to "Propeller Shafts" in Section 4B.
6) Remove fuel tank filler hose protector.
   Disconnect filler hose, vapor hose and breather hose from fuel filler neck.
7) With fuel tank supported on a jack, remove fuel tank bolts.

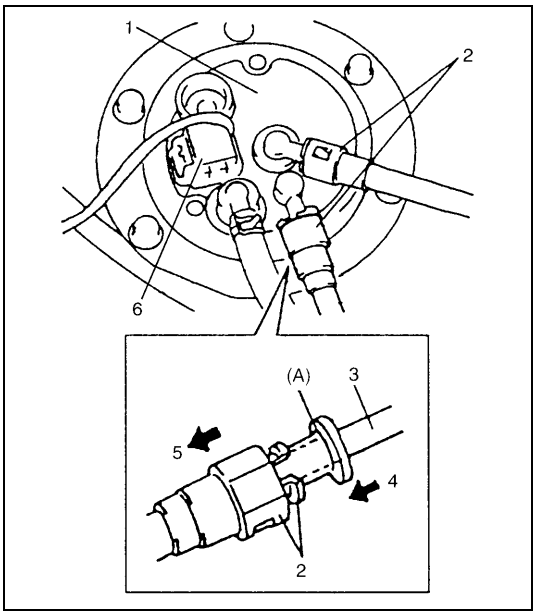

8) Lower fuel tank a little and hold it. Unclamp fuel hoses and disconnect them from fuel level gauge (1).
   When disconnecting joints of fuel feed line and return line from pipe, unlock joint by inserting special tool between pipe (3) and joint lock first.

Special tool
(A): 09919-47020

9) Disconnect fuel level gauge connector (6) from fuel level gauge.

2.	Quick joint
4.	Insert special tool
5.	Disconnect joint

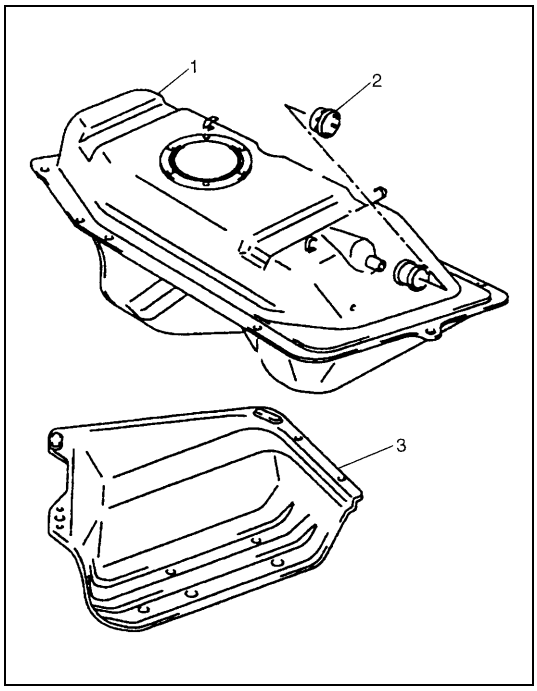

10) Remove fuel tank (1) from vehicle. Remove fuel tank protector (3) and inlet valve (2) as necessary.

Installation

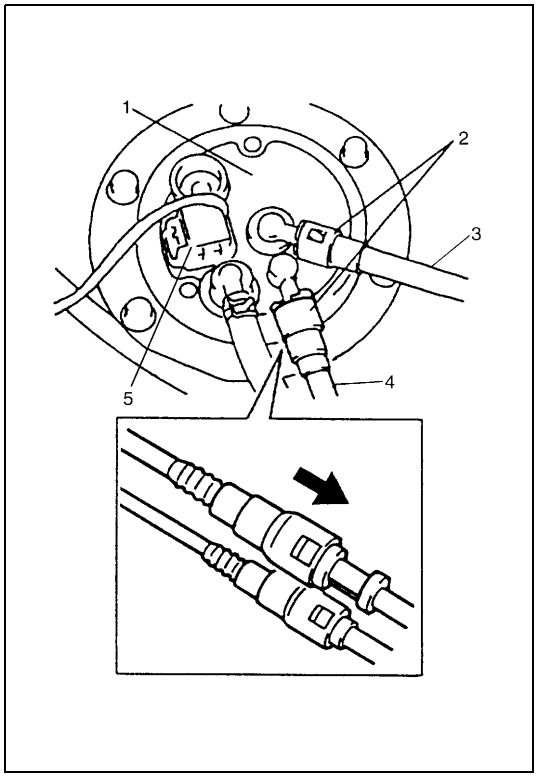

1) Install fuel level gauge (1) to fuel tank referring to “Fuel Level Gauge Assembly Removal and Installation” in Section. Install protector to fuel tank.
2) Install inlet valve to fuel tank.
   If deformed or damaged in any other way, replace with a new one.
3) Connect fuel filler and breather hoses to fuel tank and vapor hose to fuel level gauge. Clamp them securely.
4) Lift up fuel tank on jack.
   Connect fuel feed hose (4) and return hose (3) to pipes as shown in figure and clamp them securely.

CAUTION:

When connecting joint, clean outside surfaces of pipe where joint is to be inserted, push joint into pipe till joint lock clicks and check to ensure that pipes are connected securely, or fuel leak may occur.

5) Connect fuel level gauge connector (5).

2. Quick joint

6) Install fuel tank to vehicle and tighten new fuel tank mounting bolts to specified torque.

Tightening torque
Fuel tank mounting bolt: 29 N·m (2.9 kg-m, 21.0 lb-ft)

7) Connect fuel filler hose and breather hose to fuel filler neck. Connect fuel vapor hose to pipe. Clamp them securely.
8) Install fuel filler hose protector.

Tightening Torque Specification

Fastening part	Tightening torque		
	N•m	kg-m	lb-ft
Fuel level gauge bolt	10.5	1.05	7.5
Fuel tank bolt	29	2.9	21.0
Brake pipe joint bolt	11	1.1	8.0
LSPV bracket bolt	25	2.5	18.0

SECTION 6E

ENGINE AND EMISSION CONTROL SYSTEM (M13 ENGINE)

WARNING:

For vehicles equipped with a Supplemental Restraint (Air Bag) System:

- **Service on and around the air bag system components or wiring must be performed only by an authorized SUZUKI dealer. Refer to "Air Bag System Components and Wiring Location View" under "General Description" in air bag system section in order to confirm whether you are performing service on or near the air bag system components or wiring. Please observe all WARNINGS and "Service Precautions" under "On-Vehicle Service" in air bag system section before performing service on or around the air bag system components or wiring. Failure to follow WARNINGS could result in unintentional activation of the system or could render the system inoperative. Either of these two conditions may result in severe injury.**
- **Technical service work must be started at least 90 seconds after the ignition switch is turned to the "LOCK" position and the negative cable is disconnected from the battery. Otherwise, the system may be activated by reserve energy in the Sensing and Diagnostic Module (SDM).**

NOTE:

- **Whether following systems (parts) are used in the particular vehicle or not depends on specifications.**
  Be sure to bear this in mind when performing service work.
  - **– EGR valve**
  - **– Heated oxygen sensor (s) or CO adjusting resistor**
  - **– Three way catalytic converter (TWC) and warm up three-way catalytic converter (WU-TWC)**
  - **– Chamshaft position control (VVT) system.**
- **For the items with asterisk (*) in the "CONTENTS" below, refer to the same section of the Service Manual mentioned in FOREWORD of this manual.**

CONTENTS

General Description 6E-3
Air Intake System ..... 6E- *
Fuel Delivery System ..... 6E- *
Fuel pump ..... 6E- *
Electronic Control System 6E-5
Engine & emission control input / output table 6E-7
On-Vehicle Service 6E-15
Accelerator cable adjustment ..... 6E- *
Idle speed / idle air control (IAC) duty inspection 6E-15
Idle mixture inspection/adjustment (vehicle without heated oxygen sensor) ... 6E- *
Air Intake System 6E-17
Throttle body ..... 6E- *
Idle air control valve (IAC valve) ..... 6E- *
Oil control valve (engine equipped with VVT system) 6E-17
Fuel Delivery System 6E-17
Fuel pressure inspection 6E-17
Fuel pump 6E-19
Fuel pressure regulator 6E-20
Fuel injector 6E-21
Electronic Control System 6E-25
Engine control module (ECM) 6E-25
Manifold absolute pressure sensor (MAP sensor) 6E-26
Throttle position sensor (TP sensor) .....6E- *
Intake air temperature sensor (IAT sensor) (engine not equipped with VVT system) 6E-26

Mass air flow (MAF) and intake air temperature (IAT) sensor (engine equipped with VVT system) 6E-28
Engine coolant temperature sensor (ECT sensor)..... 6E-30
Heated oxygen sensor (Sensor-1 and sensor-2) ..... 6E- *
Camshaft position sensor..... 6E-31
Crankshaft position sensor..... 6E-33
Vehicle speed sensor (VSS) 6E-34
Fuel level sensor (GAUGE)..... 6E- *
Knock sensor ..... 6E- *
Main relay, fuel pump relay, A/C compressor relay and A/C condenser fan control relay..... 6E-35
Fuel cut operation ..... 6E- *
A/C condenser fan control system..... 6E-35
A/C condenser fan ..... 6E- *
Output signals of throttle valve opening and engine coolant temp. (Vehicle with A/T only) ..... 6E- *
Emission Control System..... 6E-36
EGR system (If equipped)..... 6E- *
Evaporative emission (EVAP) control system 6E-36
PCV system ..... 6E- *
Special Tools 6E-37
Tightening Torque Specifications..... 6E-37

General Description

The engine and emission control system is divided into 4 major sub-systems: air intake system, fuel delivery system, electronic control system and emission control system.

Air intake system includes air cleaner, throttle body, IAC valve and intake manifold.

Fuel delivery system includes fuel pump, delivery pipe, fuel pressure regulator, etc. Electronic control system includes ECM, various sensors and controlled devices.

Emission control system includes EGR, EVAP and PCV system.

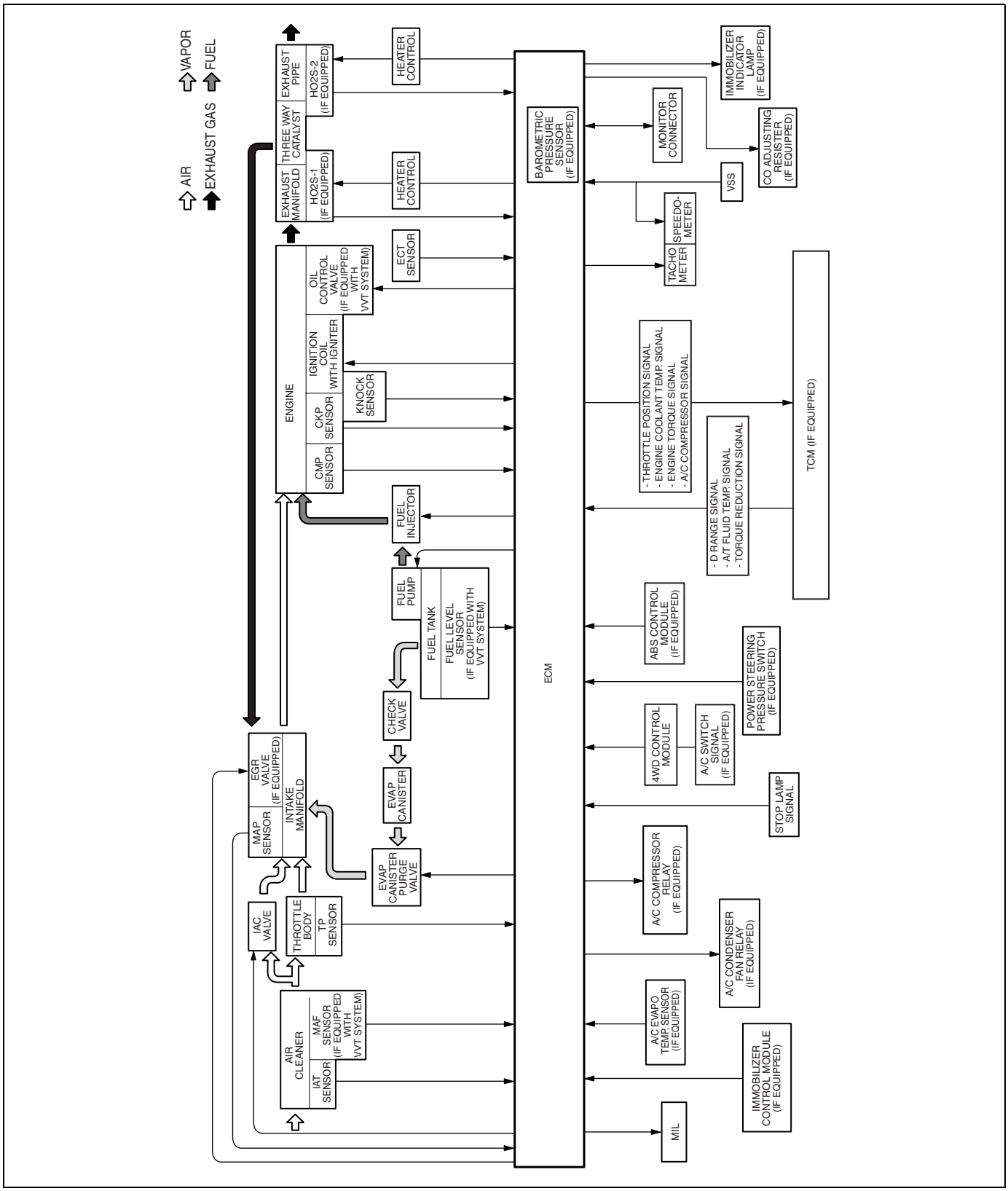

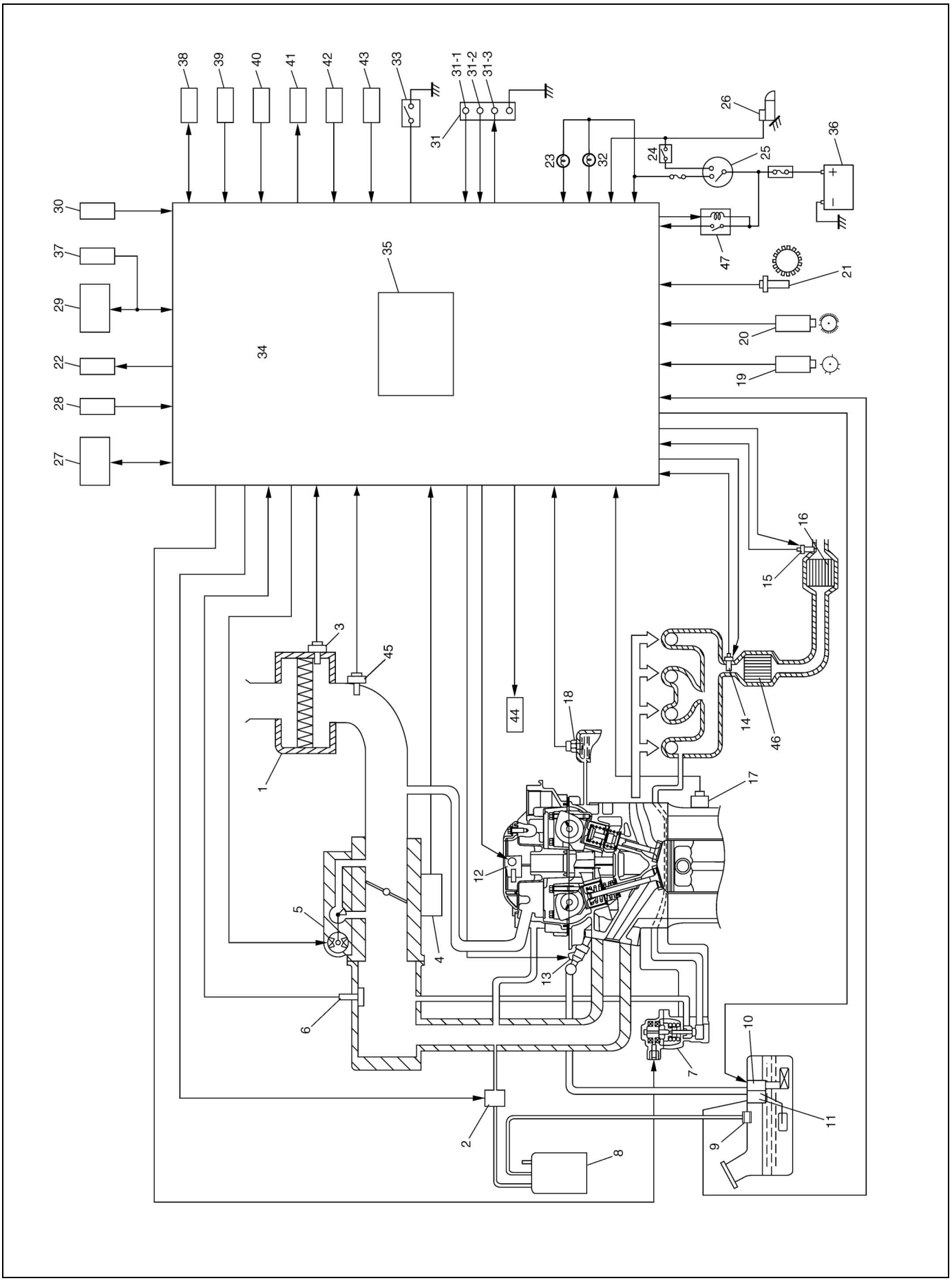
38
39
40
41
42
43
33
31-1
31-2
31-3
31
26
23
32
24
25
36
30
37
29
22
28
27
34
35
47
21
20
19
16
15
3
45
44
18
14
46
17
1
12
5
4
13
6
10
7
11
2
9
8

1. Air Cleaner	18. ECT sensor	32. Immobilizer indicator lamp (engine equipped with VVT system)
2. EVAP canister purge valve	19. CMP sensor	33. Stop lamp switch
3. IAT sensor (engine not equipped with VVT system)	20. CKP sensor	34. ECM
4. TP sensor	21. VSS	35. Barometric pressure sensor (engine equipped with VVT system)
5. IAC valve	22. A/C condenser fan (if equipped)	36. Battery
6. MAP sensor	23. Malfunction indicator lamp in combination meter	37. Immobilizer control module (if equipped)
7. EGR valve (if equipped)	24. Park/Neutral position switch in TR switch (A/T)	38. ABS control module (if equipped)
8. EVAP canister	25. Ignition switch	39. CO adjusting resistor (if equipped)
9. Tank pressure control valve (built-in fuel pump)	26. Starter magnetic switch	40. Power steering pressure switch (if equipped)
10. Fuel pump	27. TCM (A/T)	41. A/C compressor clutch (if equipped)
11. Fuel level sensor	28. Transmission range switch (A/T) (engine not equipped with VVT system)	42. A/C EVAP TEMP. sensor (if equipped)
12. Ignition coil assembly	29. DLC	43. A/C switch (if equipped)
13. Fuel injector	30. Electric load	44. Oil control valve (engine equipped with VVT system)
14. Heated Oxygen Sensor (HO2S)-1 (if equipped)	31. Monitor connector	45. MAF and IAT sensor (engine equipped with VVT system)
15. Heated Oxygen Sensor (HO2S)-2 (if equipped)	31-1. Diagnosis switch terminal (engine not equipped with VVT system)	46. Warm-up three way catalytic convertor
16. Three way catalytic convertor (if equipped)	31-2. Test switch terminal	47. Main relay
17. Knock sensor	31-3. Duty output terminal (engine not equipped with VVT system)	

Electronic Control System

The electronic control system consists of 1) various sensors which detect the state of engine and driving conditions, 2) ECM which controls various devices according to the signals from the sensors and 3) various controlled devices.

Functionally, it is divided into the following sub systems:

- Fuel injection control system
- Idle speed control system
- Fuel pump control system
- A/C control system (if equipped)
- A/C condenser fan control system (if equipped)
- EGR system (if equipped)
- Evaporative emission control system
- Oxygen sensor heater control system (if equipped)
- Ignition control system
- Camshaft position control (VVT) system (if equipped)
- Controller (computer) communication system (if equipped)

Also, with A/T model, ECM sends throttle valve opening signal, ECT signal, engine torque signal and A/C compressor signal to transmission control module to control A/T. Especially, A/T model with camshaft position control (VVT) system, ECM and TCM intercommunicate by CAN (Controller Area Network) communication system.

NOTE:

The figure shows left-hand steering vehicle. For right-hand steering vehicle, parts with (*) are installed at the other side.

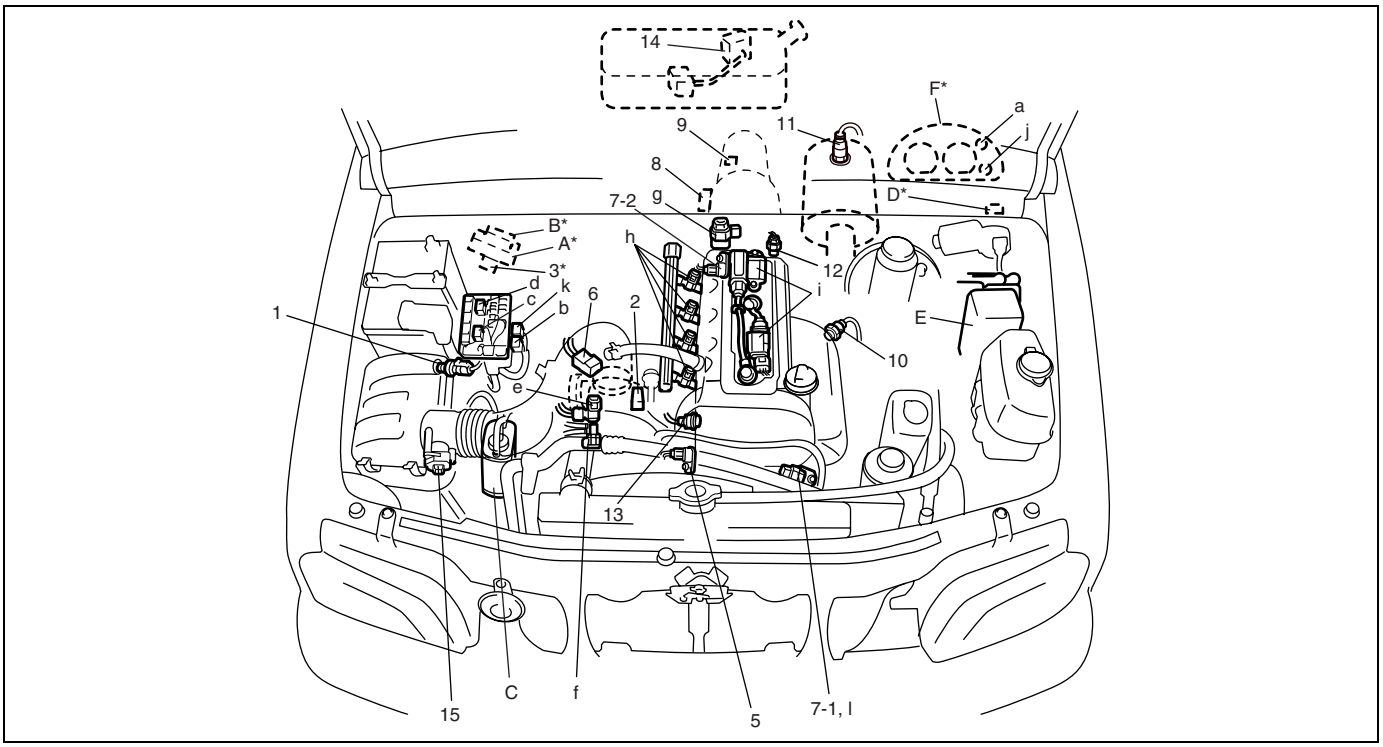

1. IAT sensor (engine not equipped with VVT system)	a: Immobilizer indicator lamp (engine equipped with VVT system)	A: ECM
2. TP sensor	b: A/C condenser fan motor relay (if equipped)	B: A/T control module (if equipped)
3. Monitor connector	c: Main relay	C: EVAP canister
4. CO adjusting resistor (if equipped)	d: Fuel pump relay	D: DLC
5. CKP sensor	e: IAC valve	E: ABS control module (if equipped)
6. MAP sensor	f: EVAP canister purge valve	F: Combination meter
7-1. CMP sensor (engine not equipped with VVT system	g: EGR valve (if equipped)	
7-2. CMP sensor (engine equipped with VVT system)	h: Fuel injector	
8. Transmission range switch	i: Ignition coil assemblies	
9. VSS	j: MIL	
10. HO2S-1 (if equipped)	k: A/C compressor relay (if equipped)	
11. HO2S-2 (if equipped)	l: Oil control valve (engine equipped with VVT system)	
12. ECT sensor		
13. Knock sensor		
14. Fuel level sensor (engine equipped with VVT system)		
15. MAF and IAT sensor (engine equipped with VVT system)		

Engine & emission control input / output table

INPUT \ OUTPUT		ELECTRIC CONTROL DEVICE											
		FUEL PUMP RELAY	FUEL INJECTOR	HO2S HEATER	IAC VALVE	IGNITION COIL WITH IGNITER	EGR VALVE (IF EQUIPPED)	EVAP CANISTER PURGE VALVE	A/C COMPRESSOR RELAY	A/C CONDENSER FAN RELAY	MIL	MAIN RELAY	OIL CONTROL VALVE (ENGINE EQUIPPED WITH VVT SYSTEM)
SIGNAL FROM SENSOR, SWITCH AND CONTROL MODULE	FUEL LEVEL SENSOR (ENGINE EQUIPPED WITH VVT SYSTEM)	For detecting fuel level											
	BAROMETRIC PRESSURE SENSOR (ENGINE EQUIPPED WITH VVT SYSTEM)		○		○	○		○			○		
	STOP LAMP SWITCH				○								
	START SWITCH	○	○		○								
	IGNITION SWITCH	○	○	○	○	○	○	○	○	○	○	○	○
	LIGHTING SWITCH				○								
	BLOWER SWITCH				○				○				
	A/C SWITCH (IF EQUIPPED)				○			○	○	○			
	A/C EVAPORATOR TEMP. SENSOR				○				○				
	VSS		○		○		○		○	○	○		○
	HEATED OXYGEN SENSOR-1 (IF EQUIPPED)		○					○			○		
	HEATED OXYGEN SENSOR-2 (IF EQUIPPED)		○								○		
	MAF SENSOR (ENGINE EQUIPPED WITH VVT SYSTEM)		○	○	○	○	○	○			○		○
	IAT SENSOR		○		○	○	○	○			○		
	ECT SENSOR		○	○	○	○	○	○	○	○	○		○
	TP SENSOR		○		○	○	○	○	○	○	○		○
	MAP SENSOR		○				○				○		
	CMP SENSOR		○			○					○		○
	CKP SENSOR	○	○	○	○	○	○	○	○		○		○
	KNOCK SENSOR					○					○		
	REAR DEFOGGER SWITCH				○								
	DIAGNOSIS SWITCH TERMINAL (ENGINE NOT EQUIPPED WITH VVT SYSTEM)										○		
	TEST SWITCH TERMINAL					○							
	ABS CONTROL MODULE (IF EQUIPPED)				○								
	IMMOBILIZER CONTROL MODULE (IF EQUIPPED)	○	○			○					○		
	TRANSMISSION CONTROL MODULE (IF EQUIPPED)				○				○		○		

ECM Input / Output Circuit Diagram

Engine not Equipped With VVT System

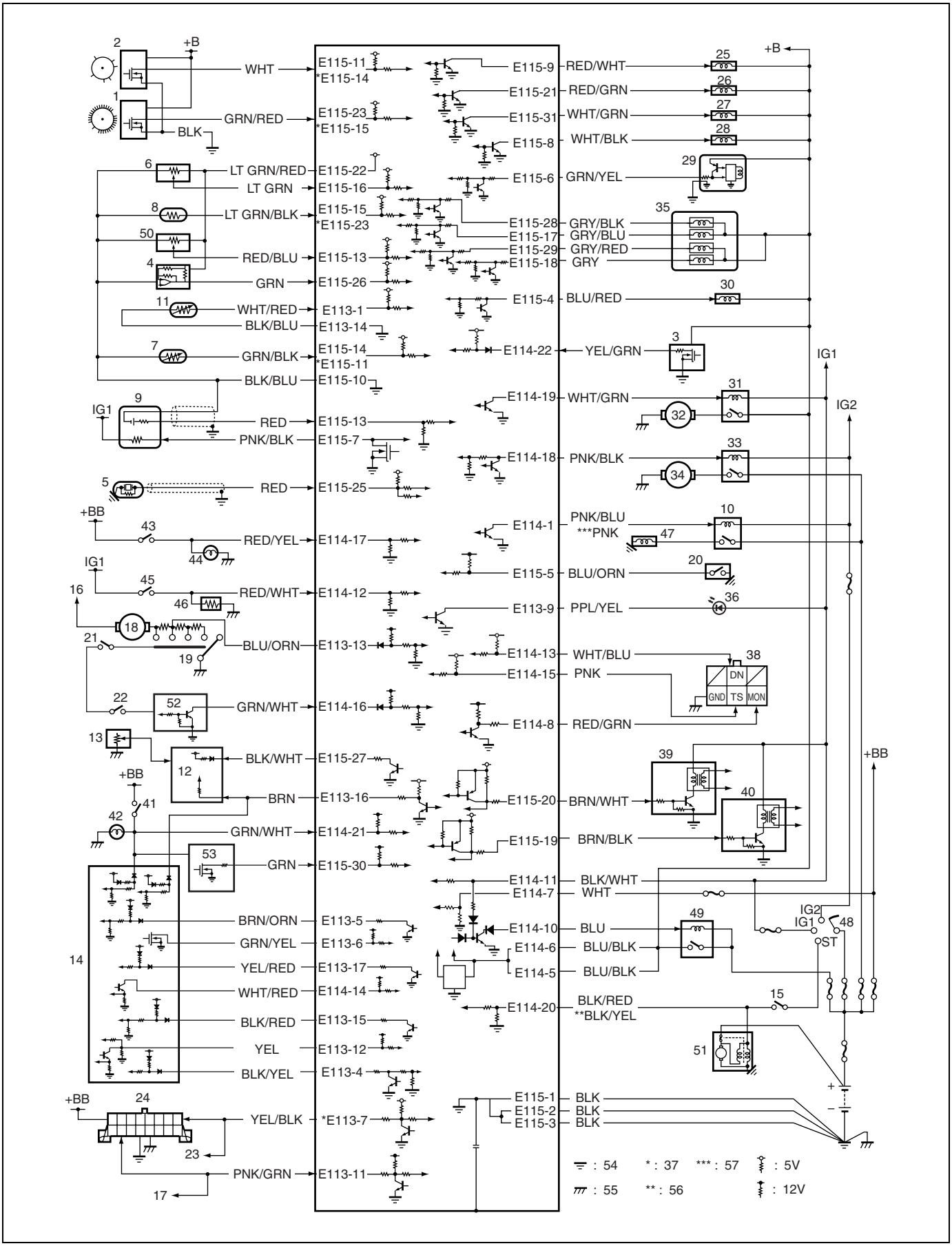

1. CKP sensor	20. Power steering pressure switch (if equipped)	39. Ignition coil assembly (for No.1 and No.4 spark plugs)
2. CMP sensor	21. A/C switch (if equipped)	40. Ignition coil assembly (for No.2 and No.3 spark plugs)
3. VSS	22. A/C refrigerant pressure switch (if equipped)	41. Stop lamp switch
4. MAP sensor	23. Immobilizer control module (if equipped)	42. Stop lamp
5. Knock sensor	24. Data link connector	43. Lighting switch
6. TP sensor	25. Injector No.1	44. Clearance, tail and license plate lights
7. ECT sensor	26. Injector No.2	45. Rear defogger switch
8. IAT sensor	27. Injector No.3	46. Rear defogger
9. Heated oxygen sensor (if equipped)	28. Injector No.4	47. A/C compressor clutch (if equipped)
10. A/C compressor relay (if equipped)	29. IAC valve	48. Ignition switch
11. A/C evaporator temp. sensor (if equipped)	30. EVAP canister purge valve	49. Main relay
12. Combination meter	31. Fuel pump relay	50. CO adjusting register (if equipped)
13. Fuel level sensor	32. Fuel pump	51. Starting motor
14. TCM (A/T)	33. A/C condenser fan relay (if equipped)	52. 4WD controller
15. Transmission range switch (A/T)	34. A/C condenser fan motor (if equipped)	53. ABS control module (if equipped)
16. Heater blower fan relay	35. EGR valve (if equipped)	54. Engine ground
17. ABS control module (if equipped) and SDM (air bag control module)	36. Malfunction indicator lamp	55. Body ground
18. Heater blower motor	37. Vehicle equipped with immobilizer control system	56. M/T vehicle
19. Heater blower fan switch	38. Monitor connector	57. Right-hand steering vehicle

Engine Equipped with VVT System

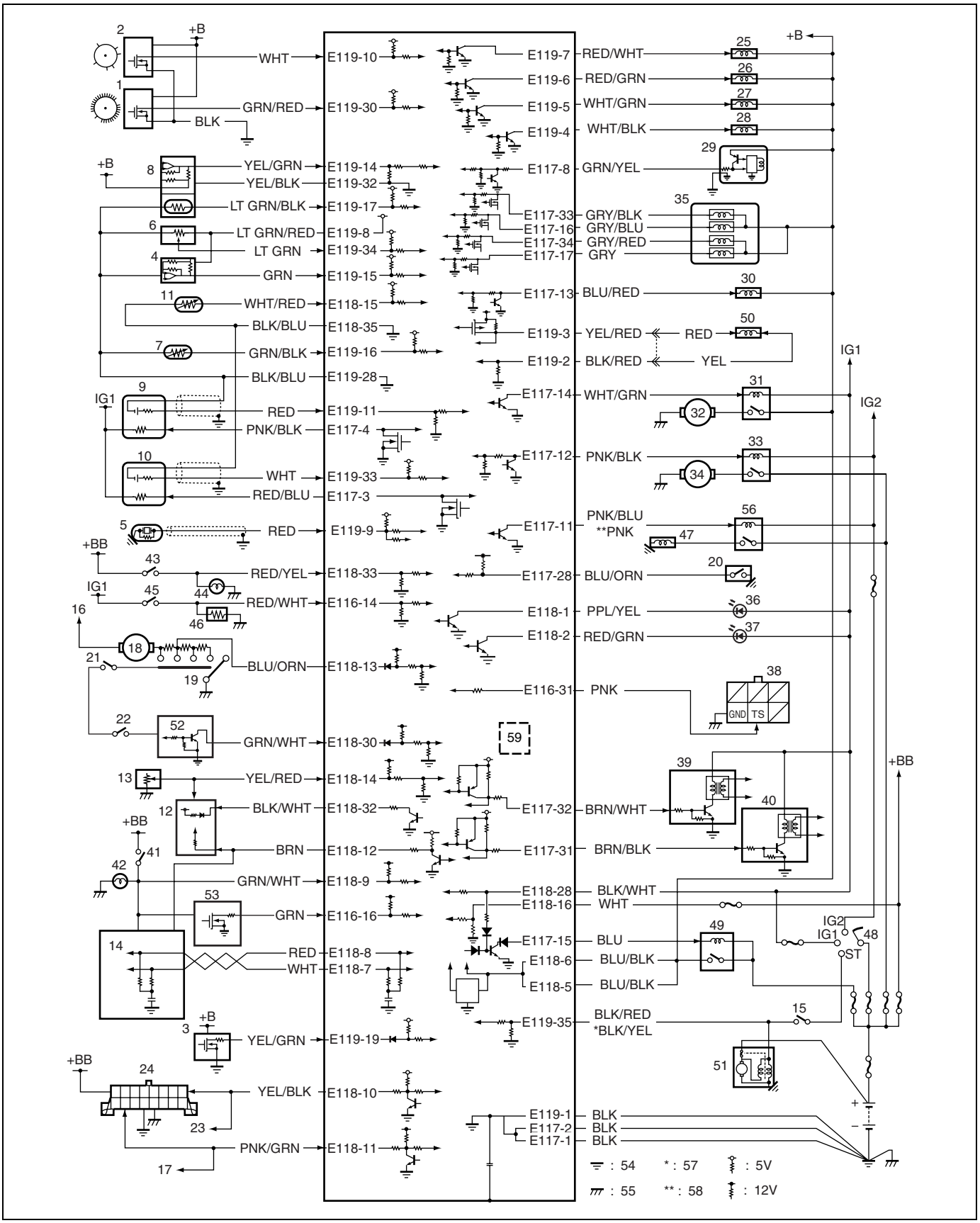

1. CKP sensor	21. A/C switch (if equipped)	41. Stop lamp switch
2. CMP sensor	22. A/C refrigerant pressure switch (if equipped)	42. Stop lamp
3. VSS	23. Immobilizer control module	43. Lighting switch
4. MAP sensor	24. Data link connector	44. Clearance, tail and license plate lights
5. Knock sensor	25. Injector No.1	45. Rear defogger switch
6. TP sensor	26. Injector No.2	46. Rear defogger
7. ECT sensor	27. Injector No.3	47. A/C compressor clutch (if equipped)
8. MAF and IAT sensor	28. Injector No.4	48. Ignition switch
9. Heated oxygen sensor-1	29. IAC valve	49. Main relay
10. Heated oxygen sensor-2	30. EVAP canister purge valve	50. Oil control valve
11. A/C evaporator temp. sensor (if equipped)	31. Fuel pump relay	51. Starting motor
12. Combination meter	32. Fuel pump	52. 4WD controller
13. Fuel level sensor	33. A/C condenser fan relay (if equipped)	53. ABS control module (if equipped)
14. TCM (A/T)	34. A/C condenser fan motor (if equipped)	54. Engine ground
15. Transmission range switch (A/T)	35. EGR valve	55. Body ground
16. Heater blower fan relay	36. Malfunction indicator lamp	56. A/C compressor relay (if equipped)
17. ABS control module (if equipped) and SDM (air bag control module)	37. Immobilizer indicator lamp	57. M/T vehicle
18. Heater blower motor	38. Monitor connector	58. Right-hand steering vehicle
19. Heater blower fan switch	39. Ignition coil assembly (for No.1 and No.4 spark plugs)	59. Barometric pressure sensor
20. Power steering pressure switch (if equipped)	40. Ignition coil assembly (for No.2 and No.3 spark plugs)	

ECM Terminal Arrangement Table

Engine not Equipped with VVT System

CONNECTOR	TERMINAL	WIRE COLOR	CIRCUIT
E115	1	BLK	Ground for ECM
	2	BLK	Ground for ECM
	3	BLK	Ground for ECM
	4	BLU/RED	EVAP canister purge valve output
	5	BLU/ORN	Power steering pressure switch signal (if equipped)
	6	GRN/YEL	IAC valve output
	7	PNK/BLK	Heater output of heated oxygen sensor (if equipped with EGR valve)
	8	WHT/BLK	Fuel injector No.4 output
	9	RED/WHT	Fuel injector No.1 output
	10	BLK/BLU	Ground for sensors
	11	WHT	CMP sensor signal (if not equipped with immobilizer control system)
		GRN/BLK	Engine coolant temp. (ECT) sensor signal (if equipped with immobilizer control system)
	12	–	–
	13	RED	Oxygen signal of heated oxygen sensor (if equipped with EGR valve)
		RED/BLU	CO adjusting resistor signal (if not equipped with EGR valve)
	14	GRN/BLK	Engine coolant temp. (ECT) sensor signal (if not equipped with immobilizer control system)
		WHT	CMP sensor signal (if equipped with immobilizer control system)
	15	LT GRN/BLK	Intake air temp. (IAT) sensor signal (if not equipped with immobilizer control system)
		GRN/RED	CKP sensor signal (if equipped with immobilizer control system)
	16	LT GRN	Throttle position (TP) sensor signal
	17	GRY/BLU	EGR valve (stepper motor coil 3) output (if equipped with HO2S)
	18	GRY	EGR valve (stepper motor coil 1) output (if equipped with HO2S)
	19	BRN/BLK	Ignition coil No.2 and No.3 output
	20	BRN/WHT	Ignition coil No.1 and No.4 output
	21	RED/GRN	Fuel injector No.2 output
	22	LT GRN/RED	Output of 5 V power source for TP sensor, MAP sensor and CO adjusting resistor (if not equipped with EGR valve)
	23	GRN/RED	CKP sensor signal (if not equipped with immobilizer control system)
		LT GRN/BLK	Intake air temp. (IAT) sensor signal (if equipped with immobilizer control system)
	24	–	–
	25	RED	Knock sensor signal
	26	GRN	Manifold absolute pressure (MAP) sensor signal
	27	BLK/WHT	ECT sensor signal for combination meter
	28	GRY/BLK	EGR valve (stepper motor coil 4) output (if equipped with HO2S)
	29	GRY/RED	EGR valve (stepper motor coil 2) output (if equipped with HO2S)
	30	GRN	ABS signal (if equipped)
	31	WHT/GRN	Fuel injector No.3 output

CONNECTOR	TERMINAL	WIRE COLOR	CIRCUIT
E114	1	PNK/BLU (left-hand steering vehicle)	A/C compressor relay output (if equipped)
		PNK (right-hand steering vehicle)	
	2	–	–
	3	–	–
	4	–	–
	5	BLU/BLK	Main power source
	6	BLU/BLK	Main power source
	7	WHT	Power source for ECM internal memory
	8	RED/GRN	Duty output terminal
	9	–	–
	10	BLU	Main power supply relay output
	11	BLK/WHT	Ignition switch signal
	12	RED/WHT	Rear defogger switch signal
	13	WHT/BLU	Diagnosis switch terminal
	14	WHT/RED	A/T fluid temp. sensor signal (A/T)
	15	PNK	Test switch terminal
	16	GRN/WHT	A/C switch signal (if equipped)
	17	RED/YEL	Lighting switch signal
	18	PNK/BLK	A/C condenser fan relay output (if equipped)
	19	WHT/GRN	Fuel pump relay output
	20	BLK/RED (A/T)	Starting motor signal
		BLK/YEL (M/T)	
	21	GRN/WHT	Stop lamp switch signal
	22	YEL/GRN	Vehicle speed sensor signal
	23	–	–
	24	–	–
E113	1	WHT/RED	A/C evaporator outlet air temp. sensor signal (if equipped)
	2	–	–
	3	–	–
	4	BLK/YEL	A/C compressor signal (A/T)
	5	BRN/ORN	Torque reduction signal (A/T)
	6	GRN/YEL	D-range idle-up signal (A/T)
	7	YEL/BLK	Serial communication line of data link connector 5 V (if equipped with immobilizer control system)
	8	–	–
	9	PPL/YEL	Malfunction indicator lamp
	10	–	–
	11	PNK/GRN	Serial communication line of data link connector 12 V
	12	YEL	Engine torque signal (A/T)
	13	BLU/ORN	Heater blower fan switch signal
	14	BLK/BLU	Ground for A/C evaporator outlet air temp. sensor (if equipped)
	15	BLK/RED	Throttle opening signal output for A/T (A/T)
	16	BRN	Engine revolution signal for tachometer
	17	YEL/RED	ECT sensor signal for A/T (A/T)

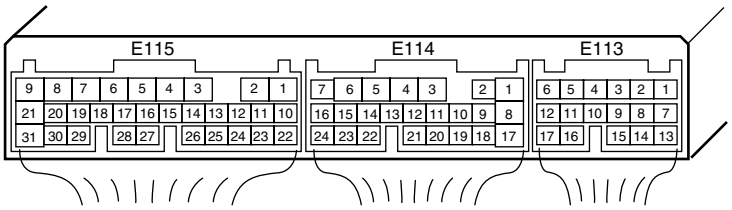

Engine Equipped with VVT System

CONNECTOR	TERMINAL	WIRE COLOR	CIRCUIT	CONNECTOR	TERMINAL	WIRE COLOR	CIRCUIT
E116	1	–	–	E118	11	PNK/GRN	Serial communication line of data link connector 12 V
	2	–	–				
	3	–	–		12	BRN	Engine revolution signal for tachometer
	4	–	–				
	5	–	–		13	BLU/ORN	Heater blower fan switch signal
	6	–	–		14	YEL/RED	Fuel level sensor signal
	7	–	–		15	WHT/RED	A/C evaporator outlet air temp. sensor signal (if equipped)
	8	–	–				
	9	–	–		16	WHT	Power source for ECM internal memory
	10	–	–				
	11	–	–		17	–	–
	12	–	–		18	–	–
	13	–	–		19	–	–
	14	RED/WHT	Rear defogger switch signal		20	–	–
	15	–	–		21	–	–
	16	GRN	ABS signal (if equipped)		22	–	–
	17	–	–		23	–	–
	18	–	–		24	–	–
	19	–	–		25	–	–
	20	–	–		26	–	–
	21	–	–		27	–	–
	22	–	–		28	BLK/WHT	Ignition switch signal
	23	–	–		29	–	–
	24	–	–		30	GRN/WHT	A/C switch signal (if equipped)
	25	–	–		31	–	–
	26	–	–		32	BLK/WHT	ECT sensor signal for combination meter
	27	–	–				
	28	–	–		33	RED/YEL	Lighting switch signal
	29	–	–		34	–	–
	30	–	–		35	BLK/BLU	Ground for A/C evaporator outlet air temp. sensor (if equipped)
	31	PNK	Test switch terminal				
E118	1	PPL/YEL	Malfunction indicator lamp	E119	1	BLK	Ground for ECM
	2	RED/GRN	Immobilizer indicator lamp		2	BLK/RED	Oil control valve ground
	3	–	–		3	YEL/RED	Oil control valve output
	4	–	–		4	WHT/BLK	Fuel injector No.4 output
	5	BLU/BLK	Main power source		5	WHT/GRN	Fuel injector No.3 output
	6	BLU/BLK	Main power source		6	RED/GRN	Fuel injector No.2 output
	7	WHT	CAN (low) communication line (active low signal)		7	RED/WHT	Fuel injector No.1 output
	8	RED	CAN (high) communication line (active high signal)		8	LT GRN/RED	Output of 5 V power source for TP sensor and MAP sensor
					9	RED	Knock sensor signal
	9	GRN/WHT	Stop lamp switch signal		10	WHT	CMP sensor signal
	10	YEL/BLK	Serial communication line of data link connector 5 V		11	RED	Oxygen signal of heated oxygen sensor-1

CONNECTOR	TERMINAL	WIRE COLOR	CIRCUIT
E119	12	–	–
	13	–	–
	14	YEL/GRN	Mass air flow (MAF) sensor signal
	15	GRN	Manifold absolute pressure (MAP) sensor signal
	16	GRN/BLK	Engine coolant temp. (ECT) sensor signal
	17	LT GRN/BLK	Intake air temp. (IAT) sensor signal
	18	–	–
	19	YEL/GRN	Vehicle speed sensor signal
	20	–	–
	21	–	–
	22	–	–
	23	–	–
	24	–	–
	25	–	–
	26	–	–
	27	–	–
	28	BLK/BLU	Ground for sensors
	29	–	–
	30	GRN/RED	CKP sensor signal
	31	–	–
	32	YEL/BLK	Ground for MAF sensor
	33	WHT	Oxygen signal of heated oxygen sensor-2
	34	LT GRN	Throttle position (TP) sensor signal
	35	BLK/RED (A/T) BLK/YEL (M/T)	Starting motor signal
E117	1	BLK	Ground for ECM
	2	BLK	Ground for ECM
	3	RED/BLU	Heater output of heated oxygen sensor-2
E117	4	PNK/BLK	Heater output of heated oxygen sensor-1
	5	–	–
	6	–	–
	7	–	–
	8	GRN/YEL	IAC valve output
	9	–	–
	10	–	–
	11	PNK/BLU (Left-hand steering vehicle) PNK (Right-hand steering vehicle)	A/C compressor relay output (if equipped)
	12	PNK/BLK	A/C condenser fan relay output (if equipped)
	13	BLU/RED	EVAP canister purge valve output
	14	WHT/GRN	Fuel pump relay output
	15	BLU	Main power supply relay output
	16	GRY/BLU	EGR valve (stepper motor coil 3) output
	17	GRY	EGR valve (stepper motor coil 1) output
	18	–	–
	19	–	–
	20	–	–
	21	–	–
	22	–	–
	23	–	–
	24	–	–
	25	–	–
	26	–	–
	27	–	–
	28	BLU/ORN	Power steering pressure switch signal (if equipped)
	29	–	–
	30	–	–
	31	BRN/BLK	Ignition coil No.2 and No.3 output
	32	BRN/WHT	Ignition coil No.1 and No.4 output
	33	GRY/BLK	EGR valve (stepper motor coil 4) output
	34	GRY/RED	EGR valve (stepper motor coil 2) output

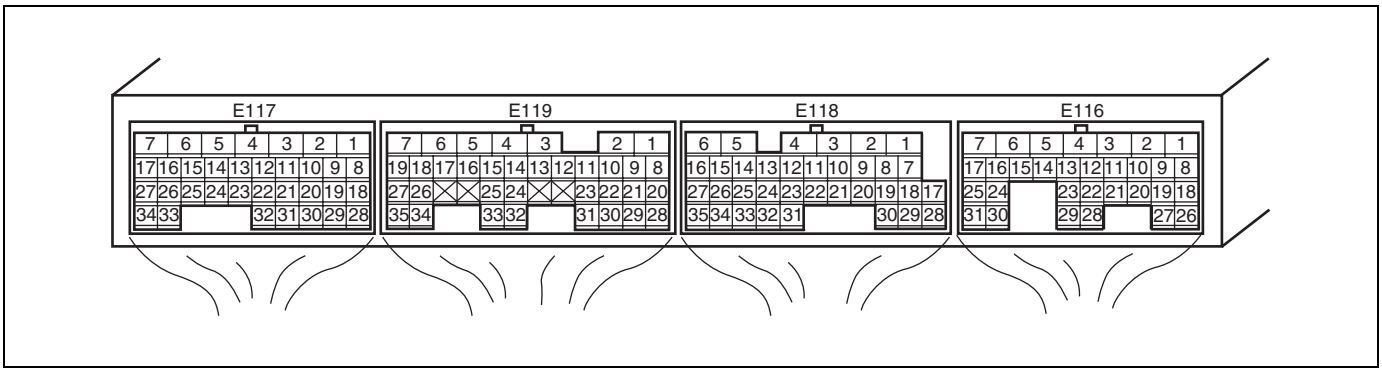

On-Vehicle Service

Idle speed / idle air control (IAC) duty inspection

Before idle speed / IAC duty check, make sure of the following.

- Lead wires and hoses of Electronic Fuel Injection and engine emission control systems are connected securely.
- Accelerator cable has some play, that is, it is not tight.
- Valve lash is checked and adjusted according to maintenance schedule.
- Ignition timing is within specification.
- All accessories (wipers, heater, lights, A/C, etc.) are out of service.
- Air cleaner has been properly installed and is in good condition.
- No abnormal air inhaling from air intake system.

After above items are all confirmed, check idle speed and IAC duty as follows.

NOTE:

Before starting engine, place transmission gear shift lever in "Neutral" (shift selector lever to "P" range for A/T vehicle), and set parking brake and block drive wheels.

1) Connect SUZUKI scan tool to DLC with ignition switch OFF, if it is available.
2) Warm up engine to normal operating temperature.

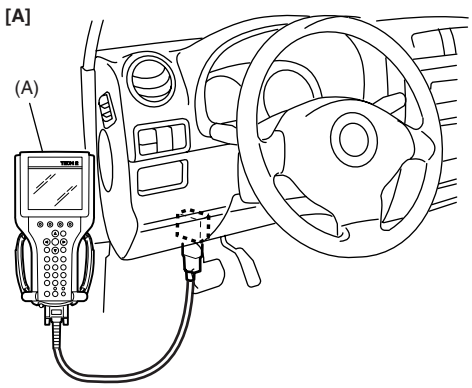

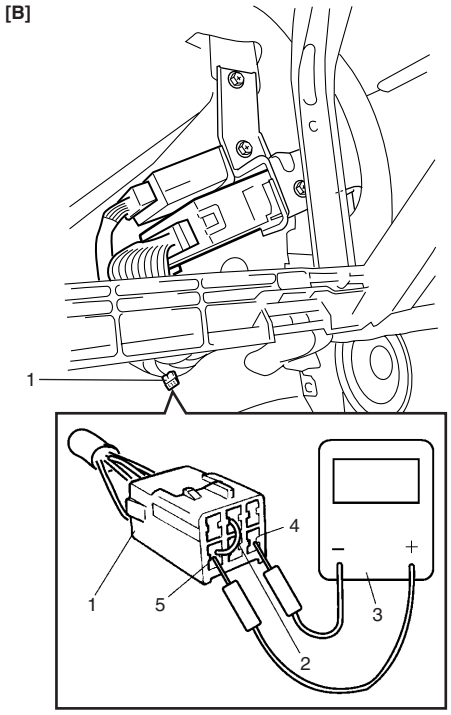

3) Check engine idle speed and “IAC duty” as follows:
   a) When using SUZUKI scan tool:
      i) Select “Data List” mode on scan tool to check “IAC duty”.

(A): SUZUKI scan tool

   b) When using duty meter (3) (Engine not equipped with VVT system):

NOTE:

IAC duty can be checked using monitor connector only for engine not equipped with VVT system.

      i) Set tachometer.
      ii) Using service wire (2), ground “Diag. switch terminal” in monitor connector (1) and connect duty meter between “Duty output terminal (4)” and “Ground terminal (5)” of monitor connector (1).

[A]: When using SUZUKI scan tool
[B]: When using duty meter (Engine not equipped with VVT system)

4) If duty and/or idle speed is out of specifications, inspect idle air control system referring to “Diagnostic Flow Table B-4 Idle Air Control System Check” in Section 6-1 (engine not equipped with VVT system) or Section 6-3 (engine equipped with VVT system).

Engine idle speed and IAC duty
Engine not equipped with VVT system:

	A/C OFF	A/C ON
M/T vehicle	700 ± 50 r/min (rpm) 5 – 25%	850 ± 50 r/min (rpm)
A/T vehicle at P/N range	750 ± 50 r/min (rpm) 5 – 25%	875 ± 50 r/min (rpm)

Engine equipped with VVT system:

	A/C OFF	A/C ON
M/T vehicle	675 ± 50 r/min (rpm) 5 – 25%	825 ± 50 r/min (rpm)
A/T vehicle at P/N range	700 ± 50 r/min (rpm) 5 – 25%	825 ± 50 r/min (rpm)

NOTE:

Above duty values are ON duty (low voltage rate) meter indications.

5) Remove service wire from monitor connector.

6) Check that specified engine idle speed is obtained with A/C ON if vehicle is equipped with A/C.
   If not, check A/C ON signal circuit and idle air control system.

Air Intake System

Oil control valve (engine equipped with VVT system)

Removal / Inspection / Installation

Refer to “Timing Chain Cover” in Section 6A3.

Fuel Delivery System

Fuel pressure inspection

WARNING:

Be sure to perform work in a well-ventilated area and away from any open flames, or there is a risk of a fire breaking out.

1) Relieve fuel pressure in fuel feed line referring to “Fuel Pressure Relief Procedure” in Section 6-1 (engine not equipped with VVT system) or Section 6-3 (engine equipped with VVT system).
2) Disconnect fuel feed hose from fuel delivery pipe.

CAUTION:

A small amount of fuel may be released when fuel hose is disconnected. Place container under the joint with a shop cloth so that released fuel is caught in container or absorbed in cloth. Place that cloth in an approved container.

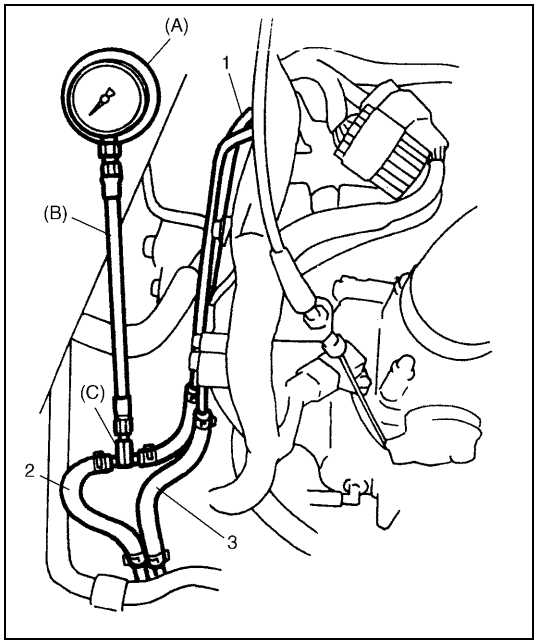

3) Connect special tools and hose between fuel delivery pipe (1) and fuel feed hose (2) as shown in figure, and clamp hoses securely to ensure no leaks occur during checking.

Special tool
(A): 09912-58442
(B): 09912-58432
(C): 09912-58490

3. Fuel return pipe

4) Check that battery voltage is above 11 V.

5) Turn ignition switch ON to operate fuel pump and after 2 seconds turn it OFF. Repeat this 3 or 4 times and then check fuel pressure.

Fuel pressure specification

CONDITION	FUEL PRESSURE
With fuel pump operating and engine stopped	**270 – 310 kPa** **2.7 – 3.1 kg/cm^2,** **38.4 – 44.0 psi**
At specified idle speed	**210 – 280 kPa** **2.1 – 2.8 kg/cm^2,** **29.9 – 39.8 psi**
With 1 min. after engine (fuel pump) stop (Pressure reduces as time passes)	**over 200 kPa** **2.0 kg/cm^2, 28.4 psi**

6) Start engine and warm it up to normal operating temperature.
7) Measure fuel pressure at idling.
   If measured pressure doesn't satisfy specification, refer to "Diagnostic Flow Table B-3" in Section 6-1 (engine not equipped with VVT system) or Section 6-3 (engine equipped with VVT system) and check each possibly defective part. Replace if found defective.

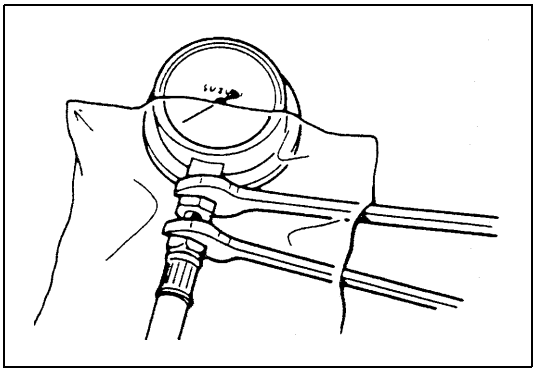

8) After checking fuel pressure, remove fuel pressure gauge.

CAUTION:

As fuel feed line is still under high fuel pressure, make sure to release fuel pressure according to following procedures.

- **Place fuel container under joint.**
- **Cover joint with rag and loosen joint nut slowly to release fuel pressure gradually.**

9) Remove special tools from fuel delivery pipe.
10) Connect fuel feed hose to fuel delivery pipe and clamp it securely.
11) With engine "OFF" and ignition switch "ON", check for fuel leaks.

Fuel pump

On-Vehicle Inspection

CAUTION:

When fuel filler cap is removed in any procedure, work must be done in a well-ventilated area, keep away from any open flames and without smoking.

NOTE:

The fuel pressure regulator is the one body with the fuel pump assembly so individual inspection of it is impossible.

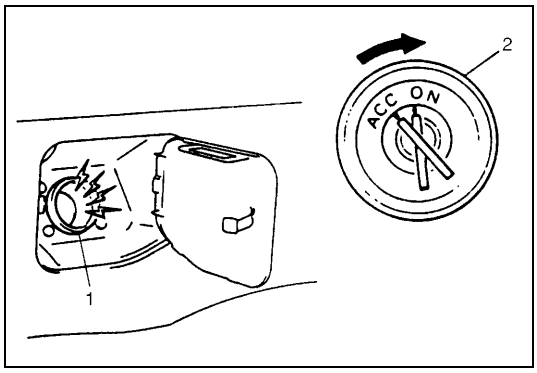

1) Remove filler cap and turn ON ignition switch (2). Then fuel pump operating sound should be heard from fuel filler (1) for about 2 seconds and stop. Be sure to reinstall fuel filler cap after checking.
   If above check result is not satisfactory, advance to “Diagnostic Flow Table B-2” in Section 6-1 (engine not equipped with VVT system) or Section 6-3 (engine equipped with VVT system).

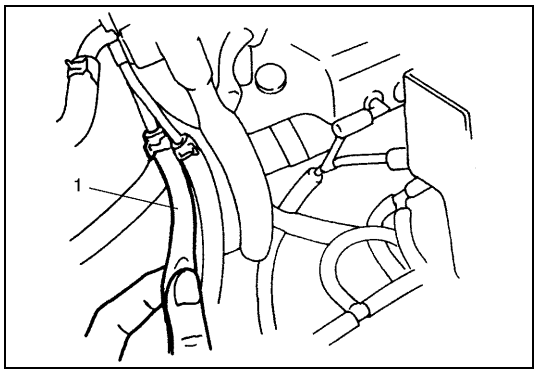

2) Turn OFF ignition switch and leave over 10 minutes as it is.
3) Fuel pressure should be felt at fuel feed hose (1) for 2 seconds after ignition switch ON.
   If fuel pressure is not felt, advance to “Diagnostic Flow Table B-3” in Section 6-1 (engine not equipped with VVT system) or Section 6-3 (engine equipped with VVT system).

Removal

Remove fuel tank from body according to procedure described in “Fuel Tank” of Section 6C and remove fuel pump from fuel tank.

Inspection

Check fuel pump filter for evidence of dirt and contamination. If present, clean and check for presence of dirt in fuel tank.

Installation

1) Install fuel pump to its bracket.
2) Install fuel pump to fuel tank and then install fuel tank to body according to procedure described in “Fuel Tank” of Section 6C.

Fuel pressure regulator

On-Vehicle Inspection

Perform fuel pressure inspection according to procedure described in “Fuel Pressure Inspection” of this section.

Removal

1) Relieve fuel pressure according to procedure described on “Fuel Pressure Relief Procedure” in Section 6-1 (engine not equipped with VVT system) or Section 6-3 (engine equipped with VVT system).
2) Disconnect battery negative cable from battery.

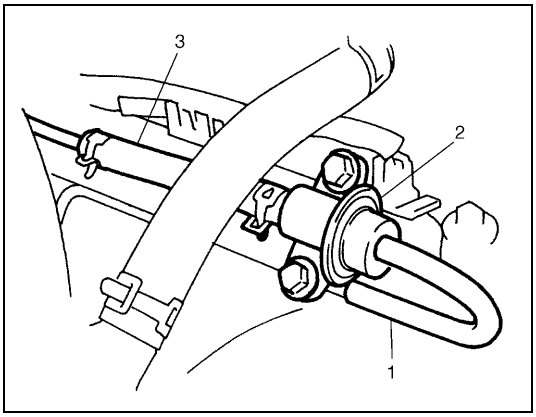

3) Disconnect vacuum hose (1) from fuel pressure regulator (2).
4) Remove fuel pressure regulator from fuel delivery pipe.

CAUTION:
A small amount of fuel may be released when it is from delivery pipe.
Place a shop cloth under delivery pipe so that released fuel is absorbed in it.

5) Disconnect fuel return hose (3) from fuel pressure regulator.

Installation

For installation, reverse removal procedure and note following precautions.

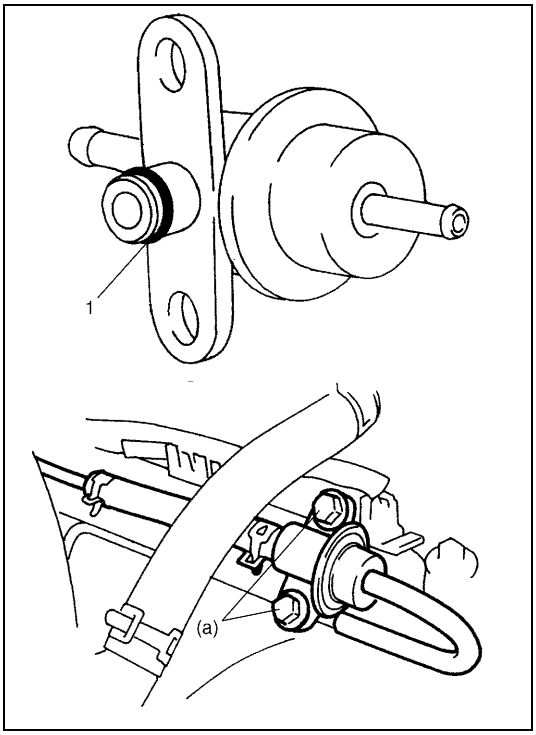

- Use new O-ring (1).
- Apply thin coat of gasoline to O-ring to facilitate installation.
- Tighten fuel pressure regulator bolts to specified torque.

Tightening torque
Fuel pressure regulator bolts
(a): 11 N·m (1.1 kg-m, 8.0 lb-ft)

- With engine “OFF” and the ignition switch ON position, check for fuel leaks around fuel line connection.

Fuel injector

On-Vehicle Inspection

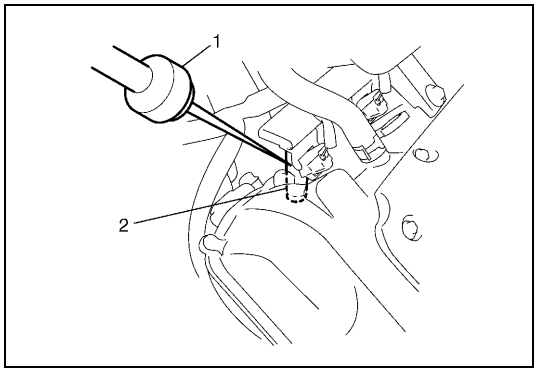

1) Using sound scope (1) or such, check operating sound of injector (2) when engine is running or cranking.
   Cycle of operating sound should vary according to engine speed.
   If no sound or an unusual sound is heard, check injector circuit (wire or connector) or injector (2).

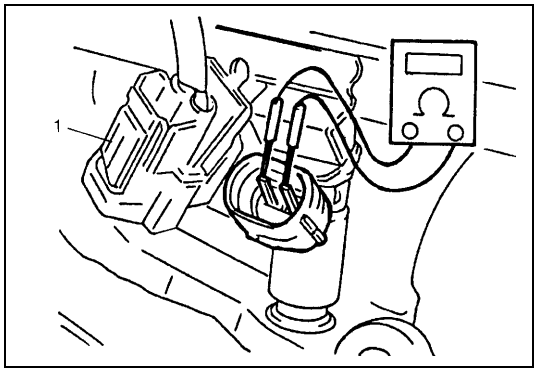

2) Disconnect connector (1) from injector, connect ohmmeter between terminals of injector and check resistance.
   If resistance is out of specification, replace.

   Reference resistance of injector
   10.5 – 14 Ω at 20 °C, 68 °F

3) Connect connector (1) to injector securely.

Removal

1) Relieve fuel pressure according to procedure described in "Fuel Pressure Relief Procedure" in Section 6-1 (engine not equipped with VVT system) or Section 6-3 (engine equipped with VVT system).
2) Disconnect battery negative cable at battery.
3) Disconnect fuel injector couplers and release wire harness from clamps.

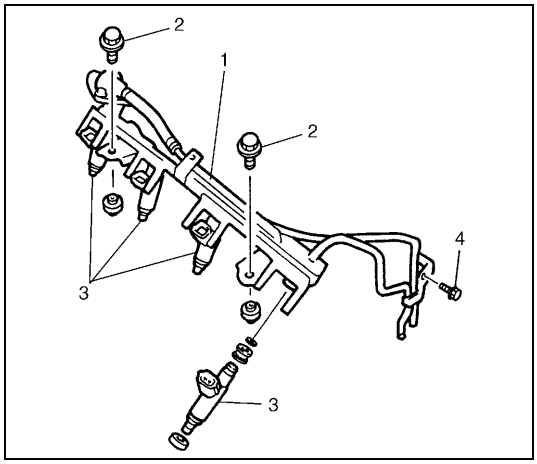

4) Remove clamp bolt (4) for fuel feed pipe and return pipe (1).
5) Remove fuel delivery pipe bolts (2).
6) Remove fuel injector(s) (3).

CAUTION:
A small amount of fuel may come out after removal of fuel injectors, cover them with shop cloth.

Inspection

WARNING:
As fuel is injected in this inspection, perform in a well ventilated area and away from open flames.
Use special care to prevent sparking when connecting and disconnecting test lead to and from battery.

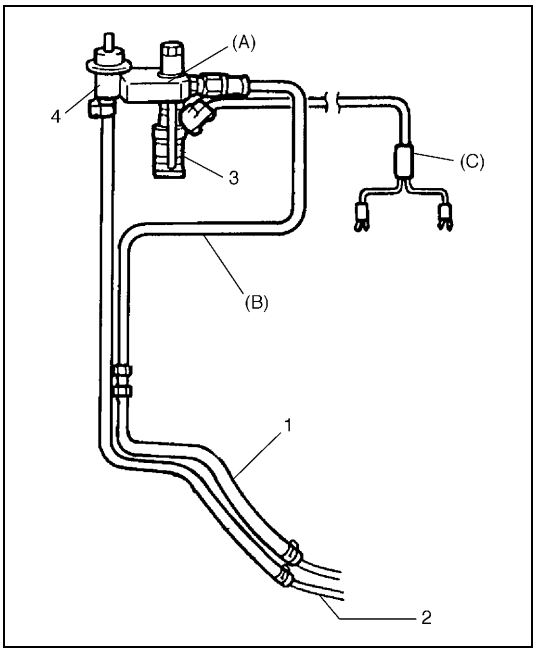

1) Install injector (3) and fuel pressure regulator (4) to special tool (injector checking tool).

   Special tool
   (A): 09912-58421

2) Connect special tools (hose and attachment) to fuel feed hose (1) of vehicle.

   Special tool
   (B): 09912-58432

3) Connect special tool (test lead) to injector.

   Special tool
   (C): 09930-88530

2. Fuel return line

4) Install suitable vinyl tube onto injector nozzle to prevent fuel from splashing out when injecting.
5) Put graduated cylinder under injector.

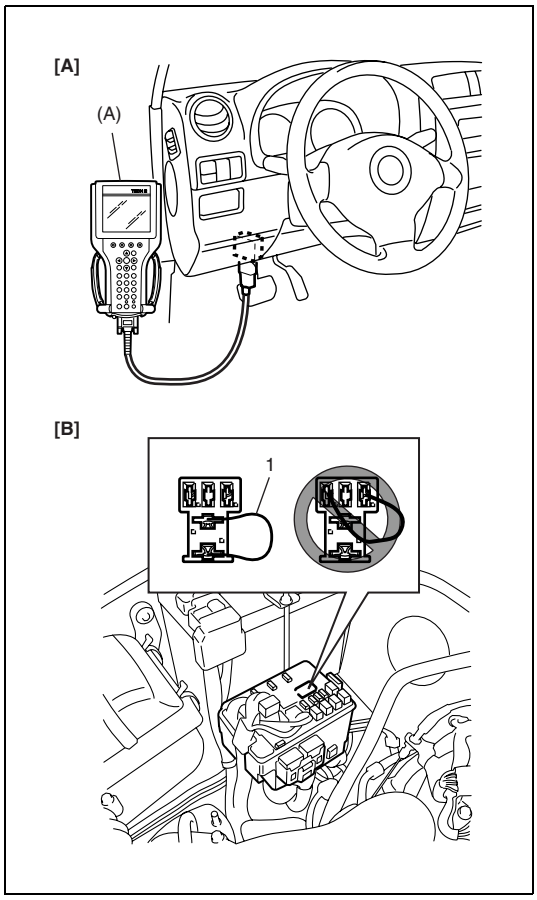

6) Operate fuel pump and apply fuel pressure to injector as follows:
   a) When using SUZUKI scan tool:
      i) Connect SUZUKI scan tool to DLC with ignition switch OFF.
      ii) Turn ignition switch ON, clear DTC and select “MISC TEST” mode on SUZUKI scan tool.
      iii) Turn fuel pump ON by using SUZUKI scan tool.

(A): SUZUKI scan tool

   b) Without using SUZUKI scan tool:
      i) Remove fuel pump relay from connector.
      ii) Connect two terminals of relay connector using service wire (1) as shown in figure.

CAUTION:

Check to make sure that connection is made between correct terminals. Wrong connection can cause damage to ECM, wire harness, etc.

      iii) Turn ignition switch ON.

[A]: When using SUZUKI scan tool
[B]: When not using SUZUKI scan tool

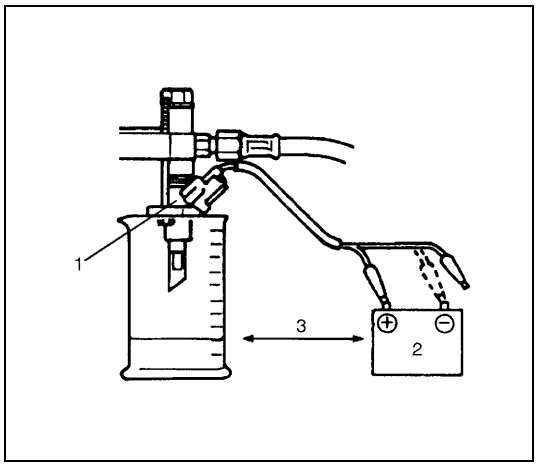

7) Apply battery voltage (2) to injector (1) for 15 seconds and measure injected fuel volume with graduated cylinder.
   Test each injector two or three times.
   If not within specification, replace injector.

Injected fuel volume
Engine not equipped with VVT system: 44 – 46 cc/15 sec. (1.49/1.55 – 1.55/1.62 US/Imp. oz/15 sec.)
Engine equipped with VVT system: 49 – 51 cc/15 sec. (1.66/1.73 – 1.72/1.80 US/Imp. oz/15 sec.)

3. Keep as far apart as possible

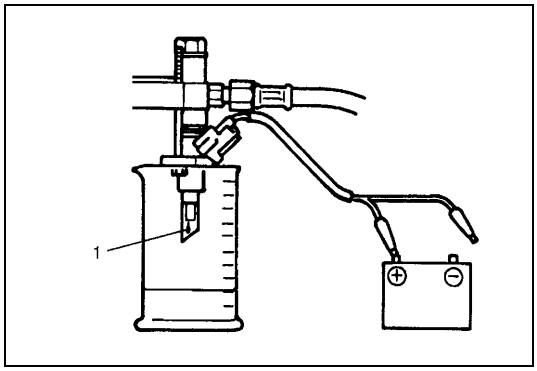

8) Check fuel leakage from injector nozzle. Do not operate injector for this check (but fuel pump should be at work).
   If fuel leaks (1) more than following specifications, replace.

Fuel leakage (1)
Less than 1 drop/min.

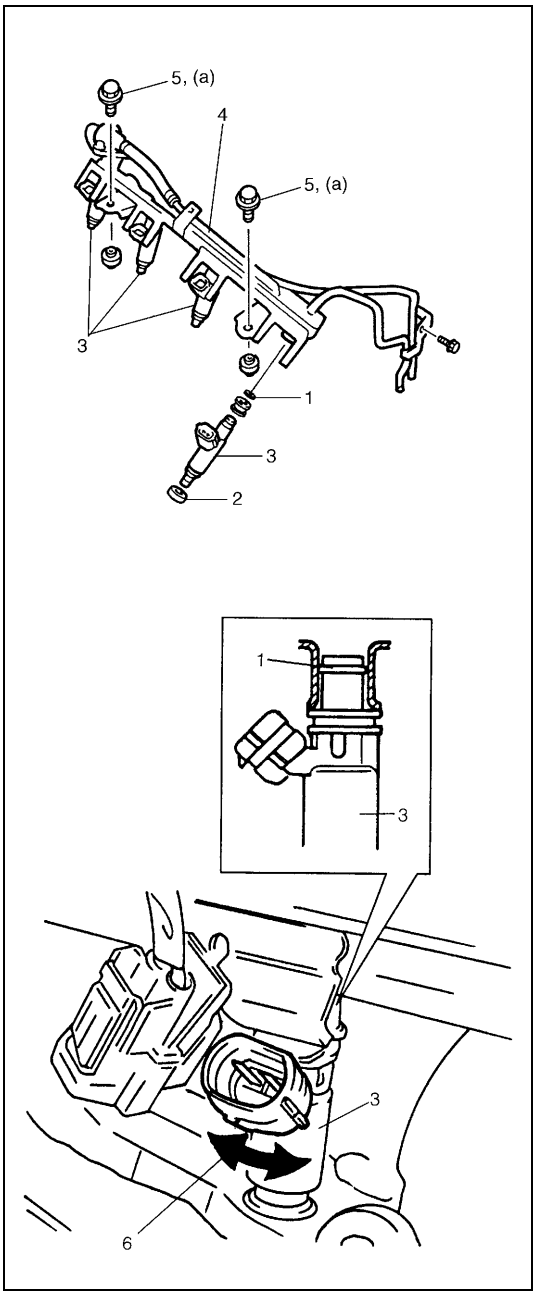

Installation

For installation, reverse removal procedure and note following precautions.

- Replace injector O-ring (1) with new one using care not to damage it.
- Check if cushion (2) is scored or damaged. If it is, replace with new one.
- Apply thin coat of fuel to O-rings (1) and then install injectors (3) into delivery pipe (4) and intake manifold.
  Make sure that injectors (3) rotate smoothly (6). If not, probable cause is incorrect installation of O-ring (1). Replace O-ring (1) with new one.
- Tighten delivery pipe bolts (5) and make sure that injectors (3) rotate smoothly (6).

Tightening torque
Delivery pipe bolt (a): 25 N·m (2.5 kg-m, 18.0 lb-ft)

- After installation, with engine “OFF” and ignition switch “ON”, check for fuel leaks around fuel line connection.

Electronic Control System

Engine control module (ECM)

CAUTION:
As ECM consists of precision parts, be careful not to expose it to excessive shock.

Removal

1) Disconnect battery negative cable at battery.
2) Disable air bag system, refer to “Disabling Air Bag System” in Section 10B if equipped.
3) Remove glove box.
4) Remove dash side trim.

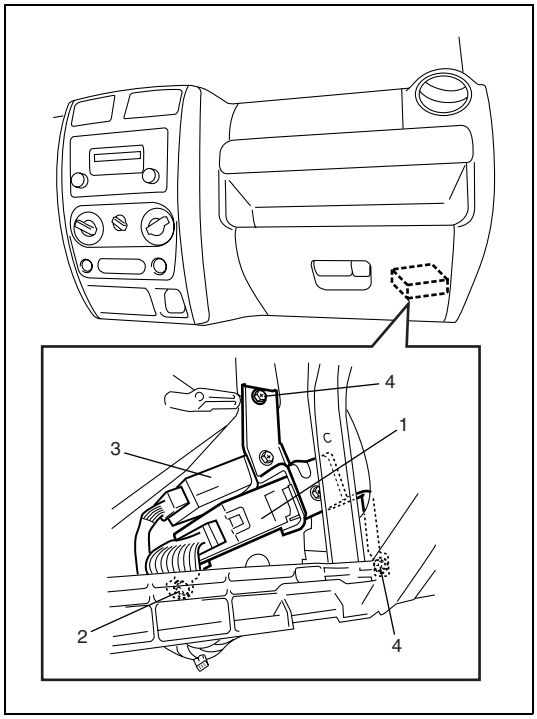

5) Disconnect ECM (1) and TCM (3) (if equipped) connectors.
6) Loosen nut (2) and bolts (4), then remove ECM and TCM (if equipped).

Installation

Reverse removal procedure noting the following.

- Connect connectors to ECM and TCM (if equipped) securely.

Manifold absolute pressure sensor (MAP sensor)

Inspection

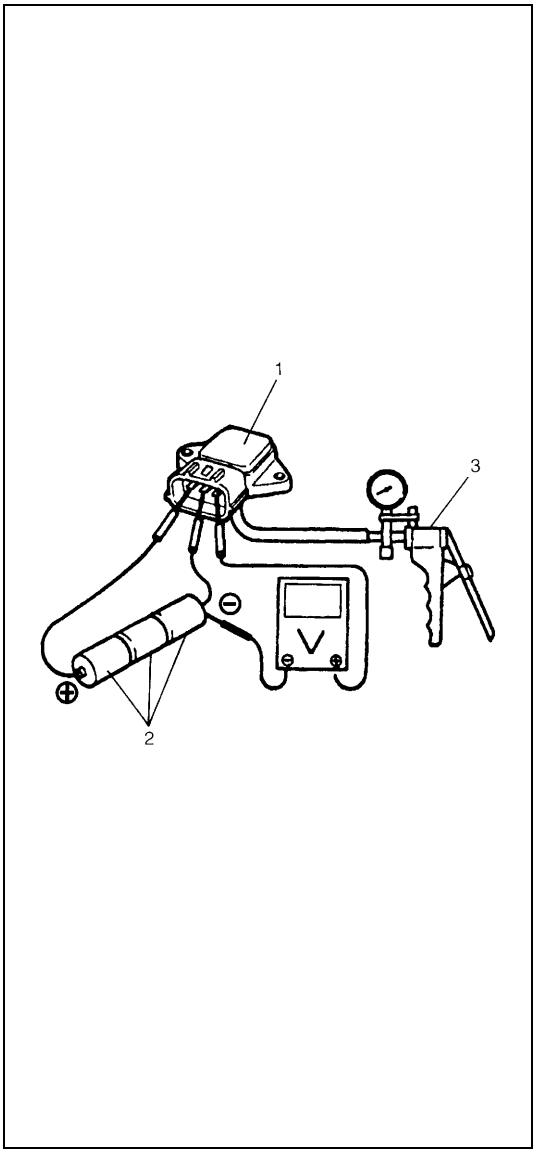

1) Disconnect connector from MAP sensor (1).
2) Remove MAP sensor (1).
3) Arrange 3 new 1.5 V batteries (2) in series (check that total voltage is 4.5 – 5.0 V) and connect its positive terminal to "Vin" terminal of sensor and negative terminal to "Ground" terminal. Then check voltage between "Vout" and "Ground". Also, check if voltage reduces when vacuum is applied up to 400 mmHg by using vacuum pump (3).
   If check result is not satisfactory, replace MAP sensor (1).

Output voltage (When input voltage is 4.5 – 5.5 V, ambient temp. 20 – 30 °C, 68 – 86 °F)

ALTITUDE (Reference)		BAROMETRIC PRESSURE		OUTPUT VOLTAGE
(ft)	(m)	(mmHg)	(kPa)	(V)
0 | 2 000	0 | 610	760 | 707	100 | 94	3.3 – 4.3
2 001 | 5 000	611 | 1 524	Under 707 over 634	94 | 85	3.0 – 4.1
5 001 | 8 000	1 525 | 2 438	Under 634 over 567	85 | 76	2.7 – 3.7
8 001 | 10 000	2 439 | 3 048	Under 567 over 526	76 | 70	2.5 – 3.3

4) Install MAP sensor (1) securely.
5) Connect MAP sensor (1) connector securely.

Intake air temperature sensor (IAT sensor) (engine not equipped with VVT system)

Removal

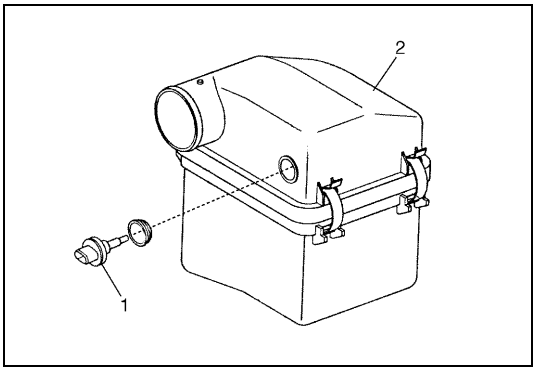

1) Disconnect battery negative cable at battery.
2) Disconnect connector from IAT sensor (1).
3) Remove IAT sensor (1) from air cleaner case (2).

Inspection

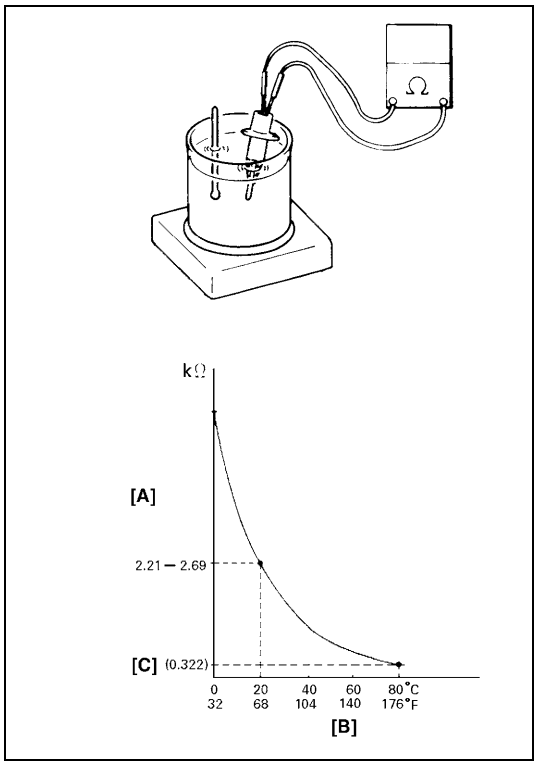

Immerse temperature sensing part of IAT sensor in water (or ice) and measure resistance between sensor terminals while heating water gradually.
If measured resistance doesn't show such characteristic as shown in the graph, replace IAT sensor.

[A]:	Resistance
[B]:	Temperature
[C]:	Reference value

Installation

Reverse removal procedure noting the following.

- Clean mating surfaces of IAT sensor and air cleaner case.
- Connect IAT sensor connector (1) securely.

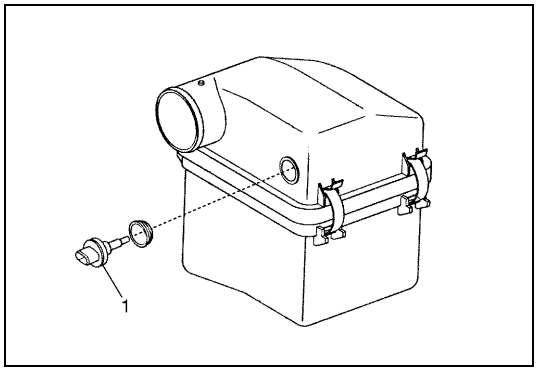

Mass air flow (MAF) and intake air temperature (IAT) sensor (engine equipped with VVT system)

On-Vehicle Inspection

1) Disconnect MAF and IAT sensor connector.

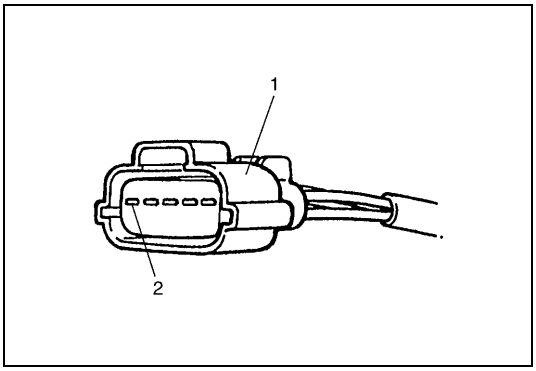

2) Connect voltmeter to “BLU/BLK” wire terminal (2) of MAF and IAT sensor coupler (1) disconnected and ground.
3) Turn ignition switch ON and check that voltage is battery voltage.
   If not, check if wire harness is open or connection is poor.
4) Turn ignition switch OFF and connect coupler to MAF and IAT sensor.

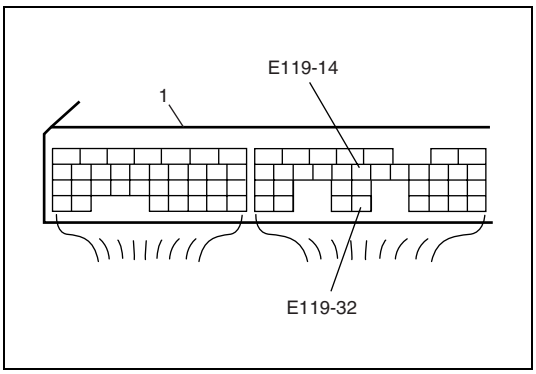

5) Turn ignition switch ON and check MAF signal voltage between “E119-14” terminal and “E119-32” terminal of ECM coupler.

MAF signal voltage of MAF and IAT sensor at ignition switch ON: 0.5 – 1.0 V

1. ECM

6) Start engine and check that voltage is lower than 5 V and it rises as engine speed increases.

MAF signal reference voltage of MAF and IAT sensor at specified idle speed: 1.3 – 1.8 V

7) If check result is not as specified above, cause may lie in wire harness, coupler connection, MAF and IAT sensor or ECM.

Removal

CAUTION:
- **Do not disassemble MAF and IAT sensor.**
- **Do not expose MAF and IAT sensor to any shock.**
- **Do not cleansing MAF and IAT sensor.**
- **If MAF and IAT sensor has been dropped, it should be replaced.**
- **Do not below compressed air by using air gun or the like.**
- **Do not put finger or any other object into MAF and IAT sensor. Malfunction may occur.**

1) Disconnect negative cable at battery.

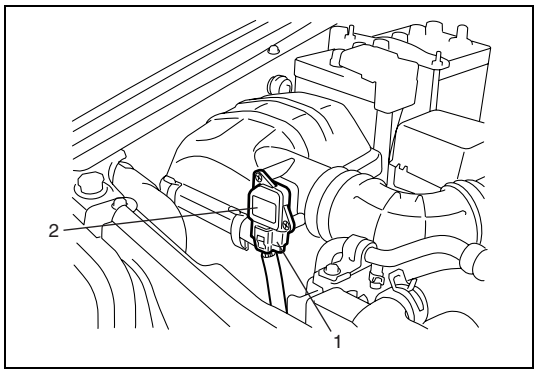

2) Disconnect MAF and IAT sensor coupler (1).
3) Remove MAF and IAT sensor (2) from air cleaner assembly.

Inspection

CAUTION:
Do not heat up the MAF and IAT sensor more than 100 °C (212 °F). Otherwise, the MAF and IAT sensor is damaged.

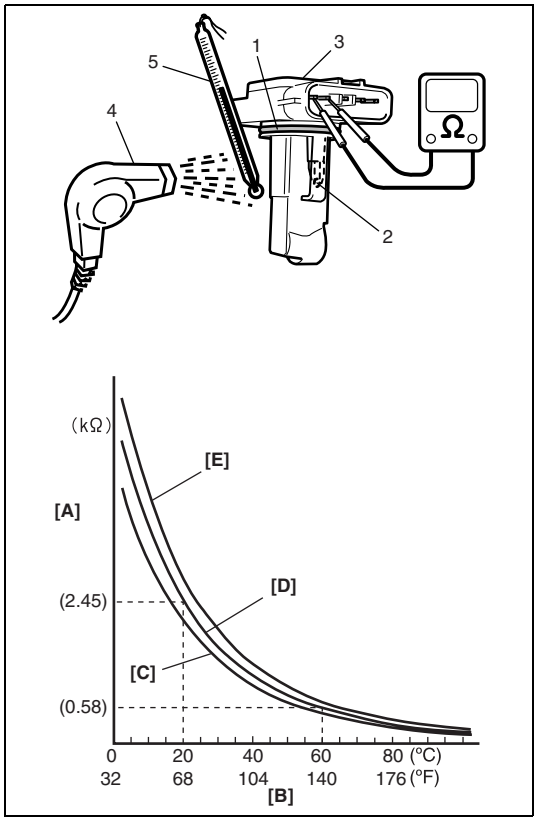

- Check sensor O-ring (1) for damage and deterioration. Replace as necessary.
- Blow hot air to temperature sensing part (2) of MAF and IAT sensor (3) using hot air drier (4) and measure resistance between sensor terminals while heating air gradually.
  If measured resistance does not show such characteristic as shown, replace MAF and IAT sensor.

Intake air temperature sensor resistance

Temperature	Resistance
–20 °C (–4 °F)	**13.6 – 18.4 kΩ**
20 °C (68 °F)	**2.21 – 2.69 kΩ**
60 °C (140 °F)	**0.493 – 0.667 kΩ**

[A]: Resistance
[B]: Temperature
[C]: Lower limit
[D]: Nominal
[E]: Upper limit
5. Temperature gauge

Installation

Reverse removal procedure noting the followings.

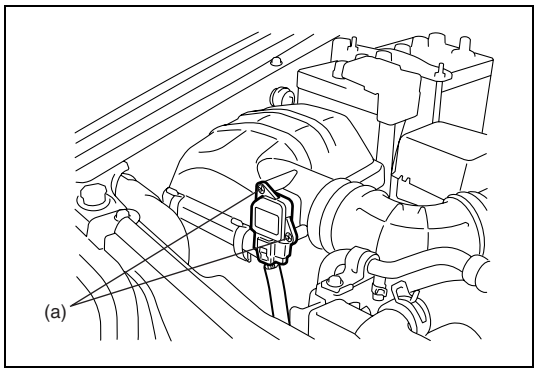

- Tighten MAF and IAT sensor screws to specified torque.

Tightening torque
MAF and IAT sensor screw
(a): 1.5 N·m (0.15 kg-m, 1.1 lb-ft)

- Connect MAF and IAT sensor coupler securely.

Engine coolant temperature sensor (ECT sensor)

Removal

1) Disconnect battery negative cable at battery.
2) Drain coolant referring to Step 6) of “Cooling System Flush and Refill” in Section 6B.

WARNING:
To avoid danger of being burned, do not remove radiator cap while engine and radiator are still hot.
Scalding fluid and steam can be blown out under pressure if cap is taken off too soon.

3) Disconnect connector from ECT sensor.
4) Remove ECT sensor (1) from water outlet cap.

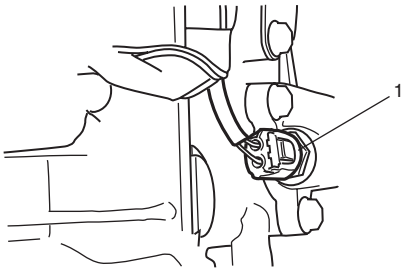

Inspection

Immerse temperature sensing part of ECT sensor (1) in water (or ice) and measure resistance between terminals while heating water gradually.
If measured resistance doesn’t show such characteristic as shown in the graph, replace ECT sensor (1).

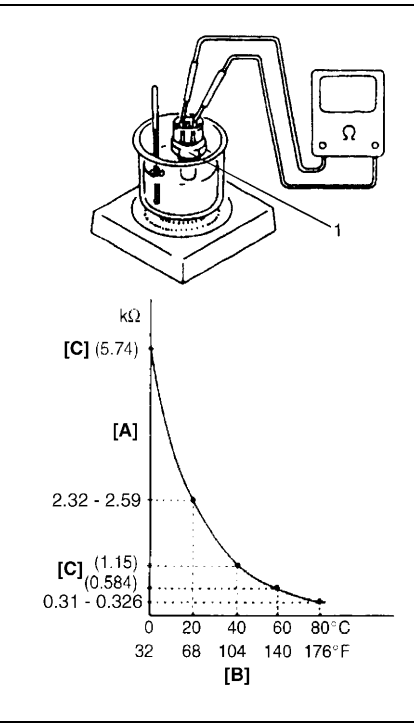

[A]:	Resistance
[B]:	Temperature
[C]:	Reference value

Installation

Reverse removal procedure noting the following:

- Clean mating surfaces of ECT sensor and water outlet cap.
- Check O-ring for damage and replace if necessary.

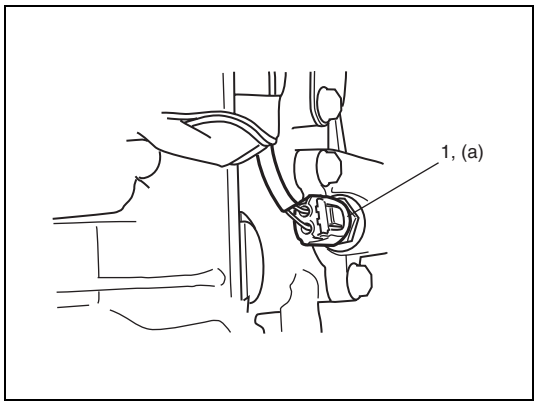

- Tighten ECT sensor (1) to specified torque.

Tightening torque
ECT sensor (a): 15 N·m (1.5 kg-m, 11.5 lb-ft)

- Connect connector to ECT sensor (1) securely.

- Refill coolant referring to “Cooling System Flush and Refill” in Section 6B.

Camshaft position sensor

Removal

1) Disconnect negative cable at battery.
2) Disconnect connector from camshaft position sensor.
3) Remove camshaft position sensor from timing chain cover (engine not equipped VVT system) or cylinder head (engine equipped with VVT system).

Inspection

Visual Check

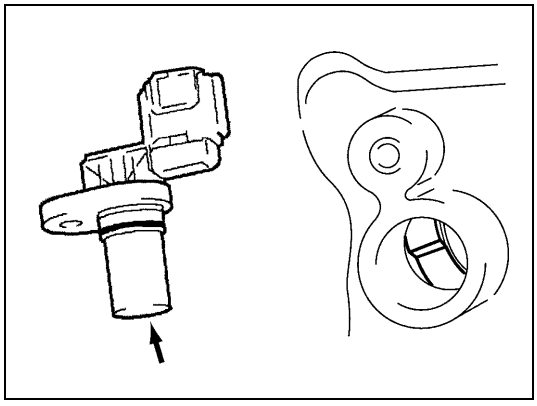

- Check that O-ring is free from damage.
- Check that end face of sensor and signal rotor tooth are free from any metal particles and damage.

Performance Check

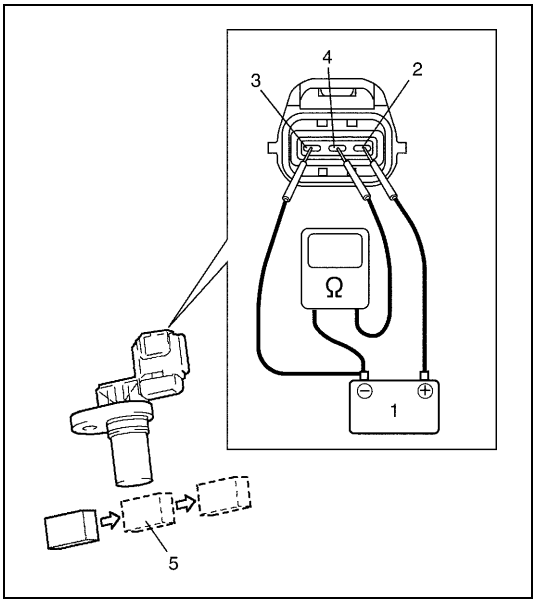

1) Remove metal particles on end face of CMP sensor, if any.
2) Arrange 12 V battery (1) and connect its positive terminal to "Vin" terminal (2) and negative terminal to "Ground" terminal (3) of sensor. Then using ohmmeter, measure resistance between "Vout" terminal (4) of sensor and negative terminal of battery by passing magnetic substance (iron) (5) while keeping approximately 1 mm (0.03 in.) gap with respect to end face of CMP sensor.
   If resistance is out of specification, replace CMP sensor.

CMP sensor resistance
Vary from less than 220 Ω (ON) to infinity (OFF) or from infinity (OFF) to less than 220 Ω (ON)

Installation

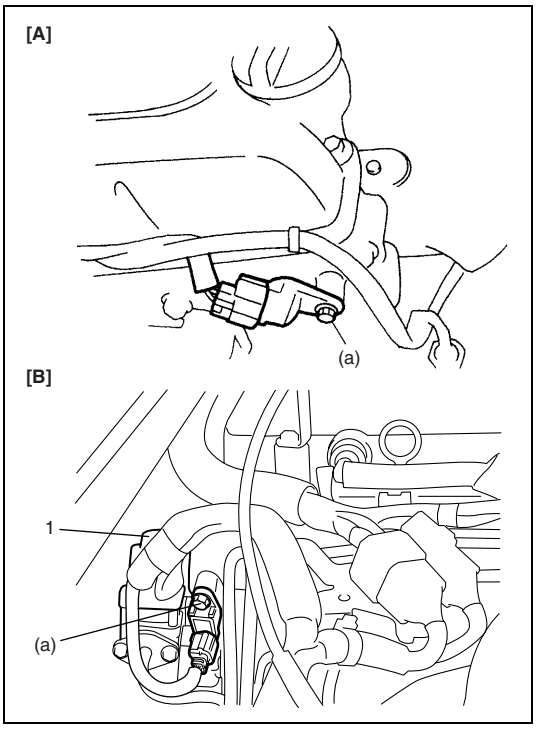

1) Install camshaft position sensor to timing chain cover (engine not equipped VVT system) or cylinder head (engine equipped with VVT system).

Tightening torque
Camshaft position sensor bolt
(a): 10 N·m (1.0 kg-m, 7.5 lb-ft)

[A]:	Engine not equipped with VVT system
[B]:	Engine equipped with VVT system
1.	EGR valve

2) Connect connector to it securely.
3) Connect negative cable to battery.

Crankshaft position sensor

Removal

1) Disconnect negative cable at battery.
2) Remove generator drive belt, loosen pivot bolt and move generator outward.
3) Disconnect connector from crankshaft position sensor.

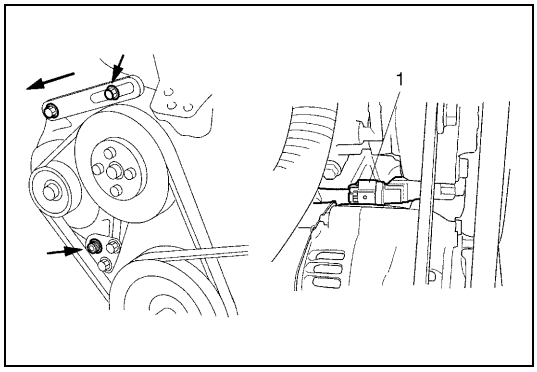

4) Remove crankshaft position sensor (1) from cylinder block.

Inspection

Visual Check

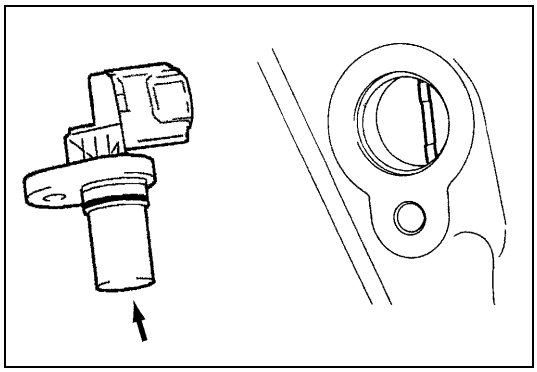

- Check that O-ring is free from damage.
- Check that end face of sensor and signal pulley tooth are free from any metal particles and damage.

Performance Check

1) Remove metal particles on end face of CKP sensor, if any.

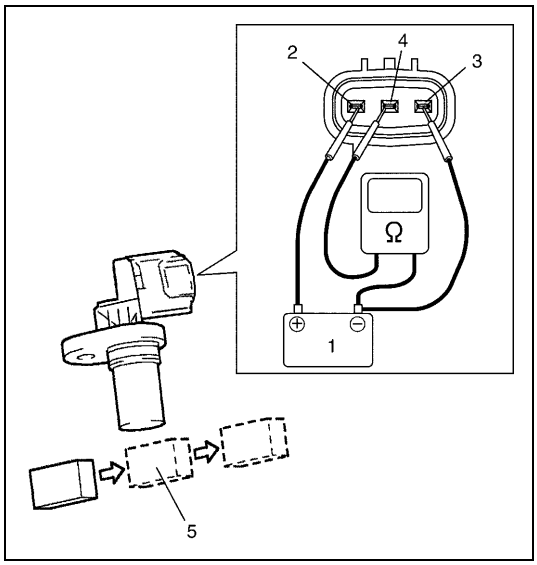

2) Arrange 12 V battery (1) and connect its positive terminal to “Vin” terminal (2) and negative terminal to “Ground” terminal (3) of sensor. Then using ohmmeter, measure resistance between “Vout” terminal (4) of sensor and negative terminal of battery by passing magnetic substance (iron) (5) while keeping approximately 1 mm (0.03 in.) gap with respect to end face of CKP sensor.
   If resistance is out of specification, replace CKP sensor.

CKP sensor resistance
Vary from less than 220 Ω (ON) to infinity (OFF) or from infinity (OFF) to less than 220 Ω (ON)

Installation

1) Install crankshaft position sensor to cylinder block.
2) Connect connector to it securely.
3) Adjust generator belt tension, refer to “Water Pump Belt Tension” in Section 6B.
4) Connect negative cable to battery.

Vehicle speed sensor (VSS)

Removal / Installation

Refer to “VSS Removal and Installation” in Section 7 D.

Inspection

Visual Check

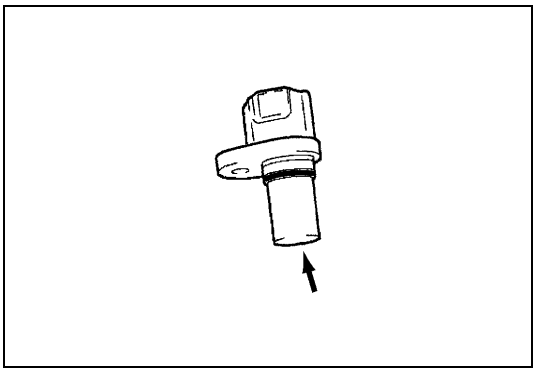

- Check that O-ring is free from damage.
- Check that end face of sensor and signal rotor tooth are free from any metal particles and damage.

Performance Check

1) Remove metal particles on end face of VSS, if any.

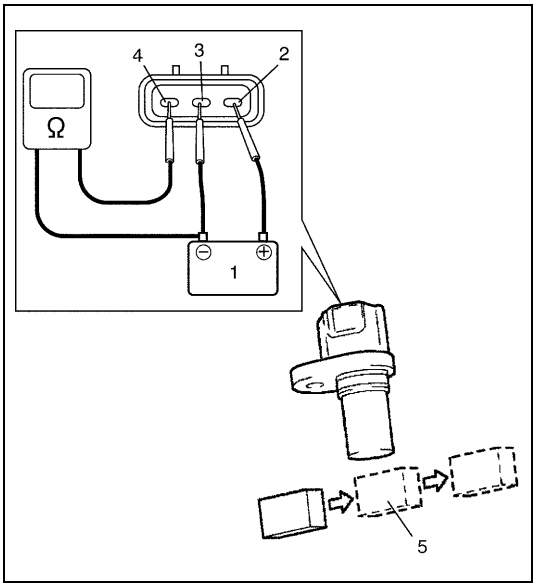

2) Arrange 12 V battery (1) and connect its positive terminal to “Vin” terminal (2) and negative terminal to “Ground” terminal (3) of sensor. Then using ohmmeter, measure resistance between “Vout” terminal (4) of sensor and negative terminal of battery by passing magnetic substance (iron) (5) while keeping approximately 1 mm (0.03 in.) gap with respect to end face of VSS.
   If resistance is out of specification, replace VSS.

VSS resistance
Vary from less than 20 Ω (ON) to infinity (OFF) or from infinity (OFF) to less than 20 Ω (ON)

Main relay, fuel pump relay, A/C compressor relay and A/C condenser fan control relay

Inspection

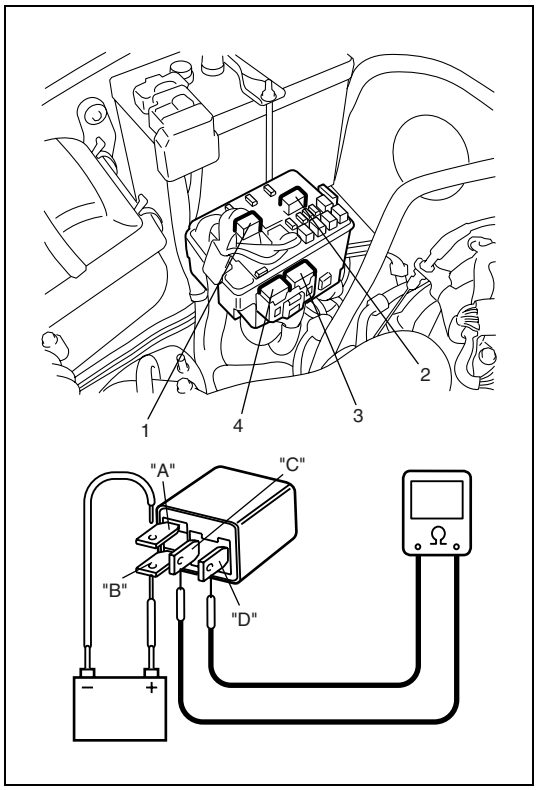

1) Disconnect negative cable at battery.
2) Remove main relay (1), fuel pump relay (2) A/C compressor relay (3) and/or A/C condenser fan control relay (4) from relay box.
3) Check that there is no continuity between terminal “A” and “B”. If there is continuity, replace relay.
4) Connect battery positive (+) terminal to terminal “C” of relay. Connect battery negative (–) terminal “D” of relay.
   Check continuity between terminal “A” and “B”.
   If there is no continuity when relay is connected to the battery, replace relay.

A/C condenser fan control system

System Inspection

WARNING:

Keep hands, tools, and clothing away from A/C condenser fan to help prevent personal injury. This fan is electric and can come on whether or not the engine is running. The fan can start automatically in response to the ECT sensor with the ignition switch in the “ON” position.

Check system for operation referring to “Flow Table B-7” in Section 6-1 (engine not equipped with VVT system) or Step 3 to 12 of “Flow Table B-5 A/C System Circuit Check” in Section 6-3 (engine equipped with VVT system).
If A/C condenser fan fails to operate properly, check relay, A/C condenser fan and electrical circuit.

Emission Control System

Evaporative emission (EVAP) control system

EVAP Canister Purge Valve Inspection

WARNING:

Do not apply vacuum by mouth; otherwise harmful fuel vapor can be breathed in.

CAUTION:

Do not apply vacuum more than –86 kPa (–12.47 Psi); otherwise EVAP canister purge valve could be damaged.

1) Remove EVAP canister purge valve.

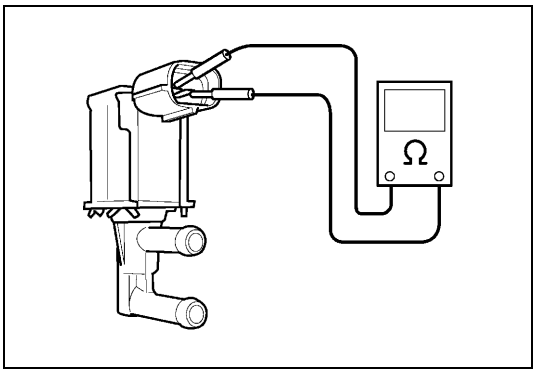

2) Measure resistance between terminals of EVAP canister purge valve. If resistance is out of specification, replace EVAP canister purge valve.

EVAP canister purge valve resistance
30 – 34 Ω at 20 °C, 68 °F

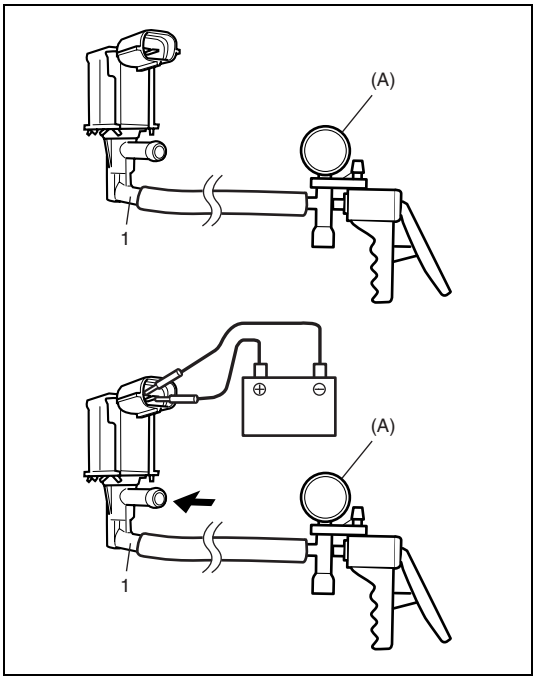

3) Apply vacuum (–60 kPa (–8.7 psi)) to pipe (1). If vacuum can be applied, go to next step. If vacuum can not be applied, replace EVAP canister purge valve.
4) In this state, connect 12 V-battery to EVAP canister purge valve terminals. If vacuum can not be applied, EVAP canister purge valve is in good condition.
   If applied, replace EVAP canister purge valve.

WARNING:

Do not suck the air through valve. Fuel vapor inside valve in harmful.

Special tool
(A): 09917-47011

5) Install EVAP canister purge valve.

Special Tools

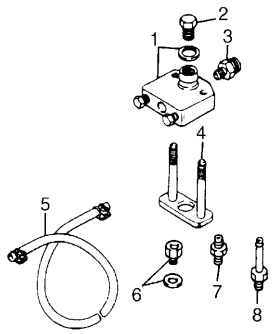 09912-58421 Checking tool set (See NOTE “A”.)	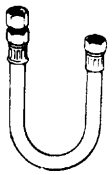 09912-58432 Pressure hose	 09912-58442 Pressure gauge	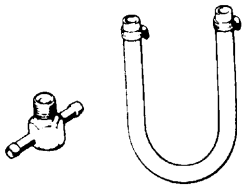 09912-58490 3-way joint & hose
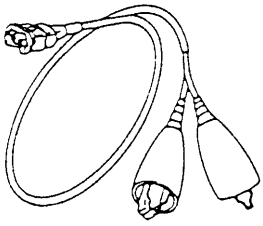 09930-88530 Injector test lead	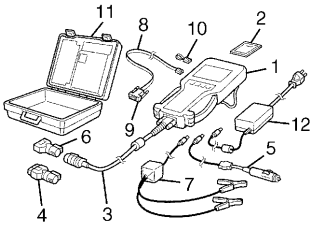 Tech 2 kit (SUZUKI scan tool) (See NOTE “B”.)	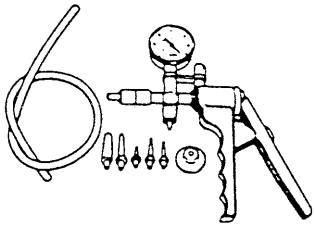 09917-47011 Vacuum pump gauge	

NOTE:

- **“A”: This kit includes the following items.**
  1. Tool body & washer, 2. Body plug, 3. Body attachment-1, 4. Holder, 5. Return hose & clamp, 6. Body attachment-2 & washer, 7. Hose attachment-1, 8. Hose attachment-2
- **“B”: This kit includes the following items.**
  1. Tech 2, 2. PCMCIA card, 3. DLC cable, 4. SAE 16/19 adapter, 5. Cigarette cable, 6. DLC loopback adapter, 7. Battery power cable, 8. RS232 cable, 9. RS232 adapter, 10. RS232 loopback connector, 11. Storage case, 12. Power supply

Tightening Torque Specifications

Fastening part	Tightening torque		
	N•m	kg-m	lb-ft
TP sensor mounting screw	2.5	0.25	1.8
IAC valve screw	3.5	0.35	2.5
ECT sensor	15	1.5	11.5
Heated oxygen sensor-1 and -2	45	4.5	32.5
Camshaft position sensor	10	1.0	7.5
Fuel pressure regulator bolt	11	1.1	8.0
MAF and IAT sensor screw	1.5	0.15	1.1

SECTION 6E2

ENGINE AND EMISSION CONTROL SYSTEM (K9K ENGINE)

WARNING:

For vehicles equipped with a Supplemental Restraint (Air Bag) System:

- **Service on and around the air bag system components or wiring must be performed only by an authorized SUZUKI dealer. Refer to "System Components and Wiring Location View and Connectors" under "General Description" in Section 10B in order to confirm whether you are performing service on or near the air bag system components or wiring. Please observe all WARNINGS and "Service Precautions" under "On-Vehicle Service" in Section 10B before performing service on or around the air bag system components or wiring. Failure to follow WARNINGS could result in unintentional activation of the system or could render the system inoperative. Either of these two conditions may result in severe injury.**
- **Technical service work must be started at least 90 seconds after the ignition switch is turned to the "LOCK" position and the negative cable is disconnected from the battery. Otherwise, the system may be activated by reserve energy in the Sensing and Diagnostic Module (SDM).**

NOTE:

For the items with asterisk (*) in the "CONTENTS" below, refer to the same section of the Service Manual mentioned in "FOREWORD" of this manual.

CONTENTS

General Description ..... 6E2- *
- System Diagram ..... 6E2- *
- Electronic Control System 6E2-3
  - System wiring diagram 6E2-3
  - System location diagram ..... 6E2- *
- Air Intake System ..... 6E2- *
- Fuel Delivery System ..... 6E2- *

On-Vehicle Service ..... 6E2- *
- Idle Speed Inspection ..... 6E2- *
- Fuel Delivery System ..... 6E2- *
  - Precautions in fuel delivery system ..... 6E2- *
  - Fuel delivery system components ..... 6E2- *
  - Fuel pressure relief confirmation procedure ..... 6E2- *
  - Fuel leakage check ..... 6E2- *
  - High pressure pipes removal and installation ..... 6E2- *
  - Fuel injector on-vehicle inspection ..... 6E2- *
  - Fuel injector removal and installation ..... 6E2- *
  - Common rail (High pressure fuel injection rail) removal and installation ..... 6E2- *
  - Injection pump removal and installation ..... 6E2- *
  - Venturi removal and installation ..... 6E2- *
- Electronic Control System ..... 6E2- *
  - Engine control module (ECM) removal and installation ..... 6E2- *
  - ECM registration ..... 6E2- *
  - Glow plug removal and installation ..... 6E2- *
  - Glow plug inspection ..... 6E2- *
  - PPS (accelerator pedal position sensor) removal and installation ..... 6E2- *
  - PPS (accelerator pedal position sensor) inspection ..... 6E2- *
  - Fuel temperature sensor removal and installation ..... 6E2- *
  - Fuel temperature sensor inspection ..... 6E2- *
  - Fuel flow actuator removal and installation ..... 6E2- *
  - Fuel flow actuator inspection ..... 6E2- *
  - Engine coolant temperature sensor (ECT sensor) removal and installation ..... 6E2- *
  - Engine coolant temperature sensor (ECT sensor) inspection ..... 6E2- *

Camshaft position sensor (CMP sensor) removal and installation ..... 6E2- *
Crankshaft position (CKP) sensor (engine speed sensor) removal and installation ..... 6E2- *
Crankshaft position (CKP) sensor (engine speed sensor) inspection ..... 6E2- *
External air temperature sensor removal and installation ..... 6E2- *
External air temperature sensor inspection ..... 6E2- *
Intake air temperature (IAT) sensor removal and installation ..... 6E2- *
Intake air temperature (IAT) sensor inspection ..... 6E2- *
Boost pressure sensor removal and installation ..... 6E2- *
Boost pressure sensor inspection ..... 6E2- *
Radiator fan control system inspection ..... 6E2- *
Main relay and radiator fan relay inspection ..... 6E2- *
Pre-heating unit removal and installation ..... 6E2- *
Knock sensor removal and installation ..... 6E2- *
EGR valve removal and installation ..... 6E2- *
EGR valve inspection ..... 6E2- *
Tightening Torque Specification ..... 6E2- *
Special Tool ..... 6E2- *

Electronic Control System

System wiring diagram

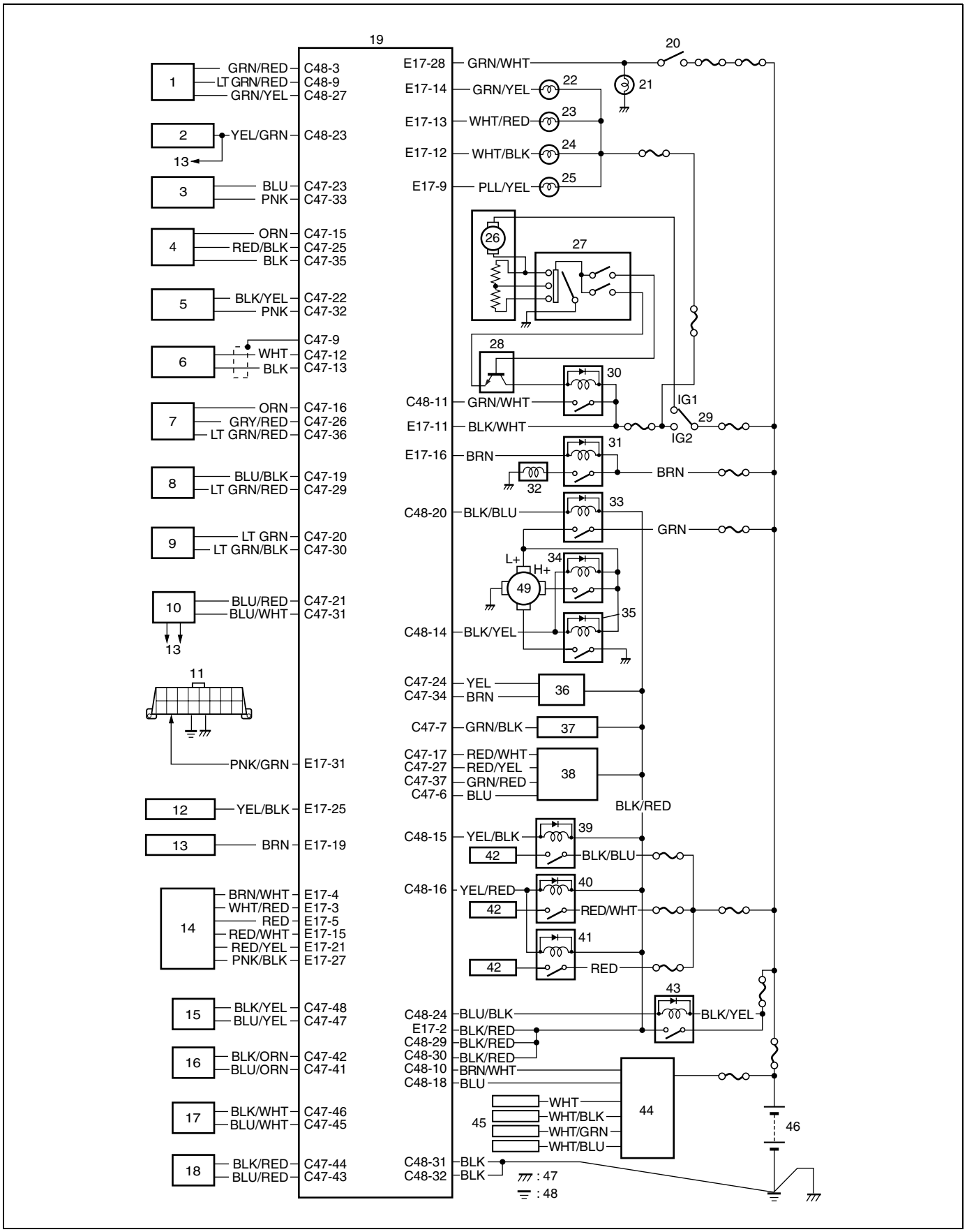

1. A/C pressure sensor (if equipped)	18. Fuel injector No.4	35. Radiator fan relay No.3
2. VSS	19. ECM	36. CMP sensor
3. CKP sensor	20. Brake (stop) lamp switch	37. Fuel flow actuator
4. Fuel pressure sensor	21. Brake lamp	38. EGR valve
5. Fuel temperature sensor	22. Glow lamp	39. Additional heater relay No.1
6. Knock sensor	23. Injection warning light (gravity 1 warning light)	40. Additional heater relay No.2
7. Boost pressure sensor	24. Red stop warning light (gravity 2 warning light)	41. Additional heater relay No.3
8. External air temperature sensor	25. Malfunction indicator lamp (MIL)	42. Additional heater plug
9. IAT sensor	26. Heater fan motor	43. Main relay
10. ECT sensor	27. Heater fan and rear defogger switch	44. Pre-heating unit
11. Data link connector	28. A/C evaporator thermistor (if equipped)	45. Glow plug
12. Immobilizer control module	29. Ignition switch	46. Battery
13. Combination meter	30. A/C relay (if equipped)	47. Body ground
14. PPS (Accelerator pedal position sensor)	31. Compressor relay	48. Engine ground
15. Fuel injector No.1	32. A/C compressor (if equipped)	49. Radiator fan motor
16. Fuel injector No.2	33. Radiator fan relay No.1	
17. Fuel injector No.3	34. Radiator fan relay No.2	

SECTION 6F

IGNITION SYSTEM (ELECTRONIC IGNITION SYSTEM)

WARNING:

For vehicles equipped with a Supplemental Restraint (Air Bag) System:

- **Service on and around the air bag system components or wiring must be performed only by an authorized SUZUKI dealer. Refer to "Air Bag System Components and Wiring Location View" under "General Description" in air bag system section in order to confirm whether you are performing service on or near the air bag system components or wiring. Please observe all WARNINGS and "Service Precautions" under "On-Vehicle Service" in air bag system section before performing service on or around the air bag system components or wiring. Failure to follow WARNINGS could result in unintentional activation of the system or could render the system inoperative. Either of these two conditions may result in severe injury.**
- **Technical service work must be started at least 90 seconds after the ignition switch is turned to the "LOCK" position and the negative cable is disconnected from the battery. Otherwise, the system may be activated by reserve energy in the Sensing and Diagnostic Module (SDM).**

NOTE:

For the items with asterisk (*) in the "CONTENTS" below, refer to the same section of the Service Manual mentioned in FOREWORD of this manual.

CONTENTS

General Description 6F-2
Diagnosis ..... 6F- *
On-Vehicle Service 6F-4
Ignition Spark Test ..... 6F- *
High-tension Cords ..... 6F- *
Spark Plugs 6F-4
Ignition Coil Assembly (Including Ignitor) 6F-5
Crankshaft Position Sensor (CKP Sensor) ... 6F- *
Ignition Timing 6F-6
Special Tools 6F-8
Tightening Torque Specification 6F-8

General Description

System Components

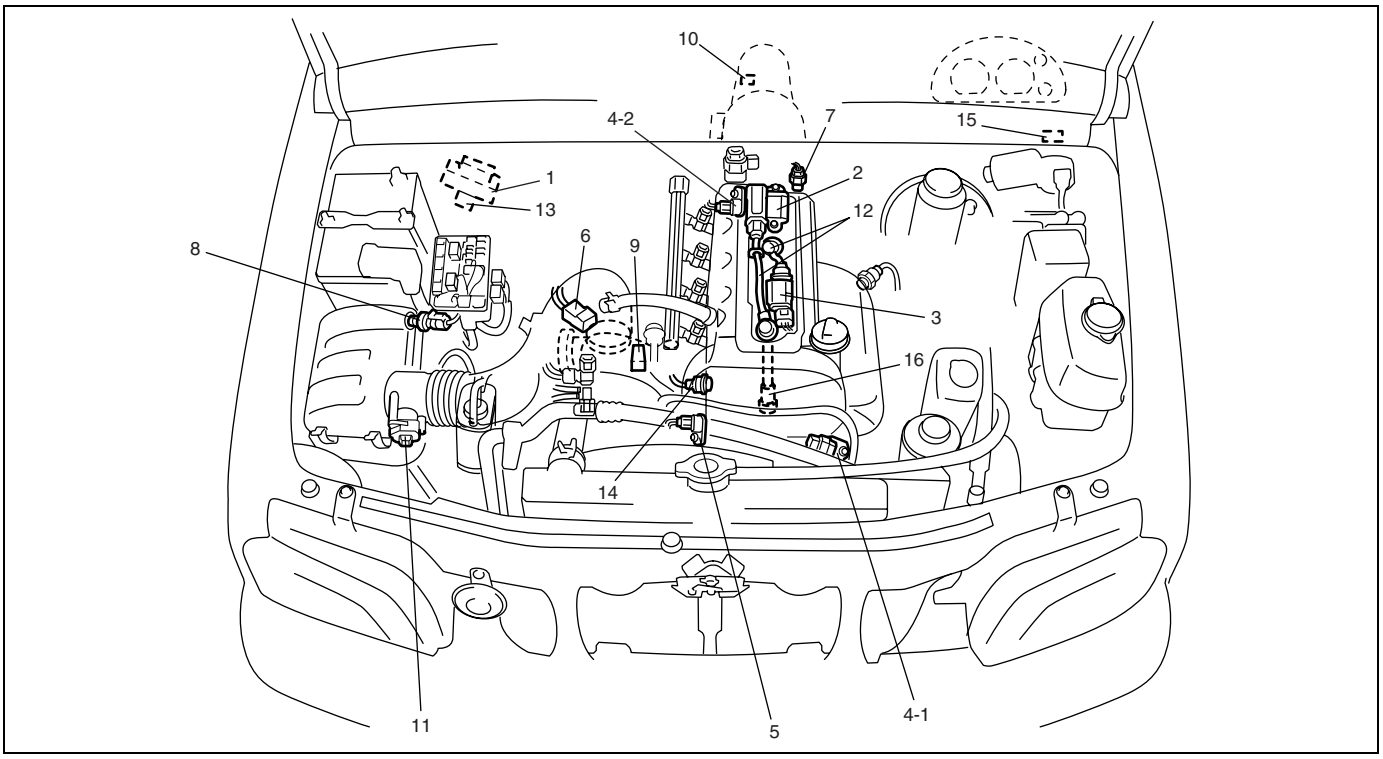

1. ECM	6. MAP sensor	12. High-tension cords
2. Ignition coil assembly for No.1 and No.4 spark plugs	7. ECT sensor	13. Monitor connector
3. Ignition coil assembly for No.2 and No.3 spark plugs	8. IAT sensor (engine not equipped with VVT system)	14. Knock sensor
4-1. CMP sensor (engine not equipped with VVT system)	9. TP sensor	15. DLC
4-2. CMP sensor (engine equipped with VVT system)	10. VSS	16. Spark plugs
5. CKP sensor	11. MAF and IAT sensor (engine equipped with VVT system)	

System Wiring Diagram

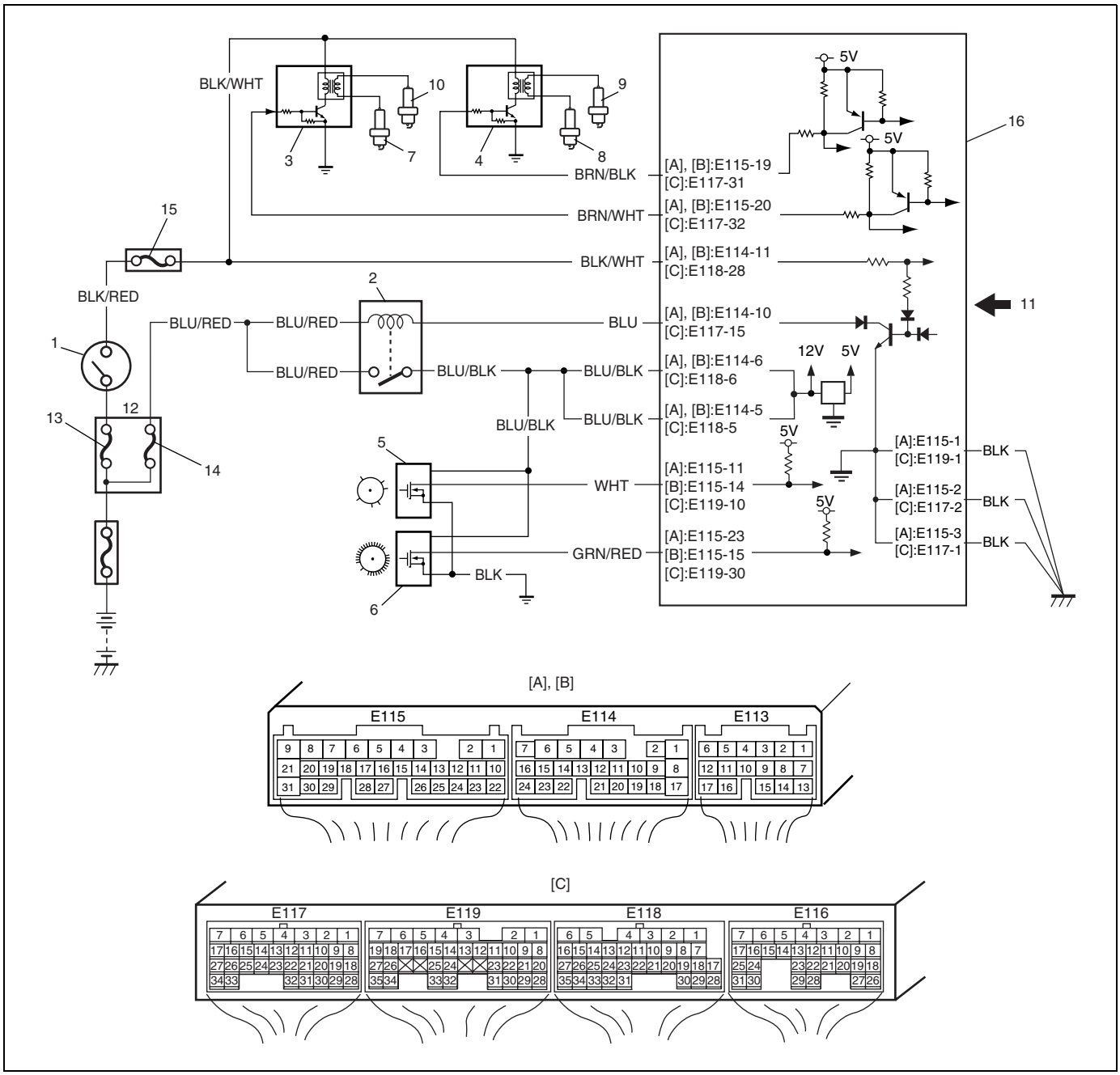

[A]: Engine equipped with neither VVT system nor immobilizer control system	8. No.2 spark plug
[B]: Engine not equipped with VVT system but equipped with immobilizer control system	9. No.3 spark plug
[C]: Engine equipped with VVT system	10. No.4 spark plug
1. Ignition switch	11. Sensed information (MAP sensor, ECT sensor, IAT sensor, MAF sensor (if equipped with VVT system), TP sensor, Knock sensor, VSS, Park/Neutral position signal, Electric load signal, Engine start signal, Test switch terminal)
2. Main relay	12. Relay box
3. Ignition coil assembly for No.1 and No.4 spark plugs	13. “IGN1” fuse
4. Ignition coil assembly for No.2 and No.3 spark plugs	14. “FI” fuse
5. CMP sensor	15. “IG” fuse
6. CKP sensor	16. ECM
7. No.1 spark plug	

On-Vehicle Service

Spark Plugs

CAUTION:
When servicing the iridium/platinum spark plugs (slender center electrode type plugs), do not touch the center electrode to avoid damage to it. The electrode is not strong enough against mechanical force as it is slender and its material is not mechanically tough.

1) Remove cylinder head upper cover.
2) Pull out high-tension cords by gripping their caps and then remove ignition coil assemblies referring to “Ignition Coil Assembly” in this section.
3) Remove spark plugs.
4) Inspect them for:
   - Electrode wear
   - Carbon deposits
   - Insulator damage

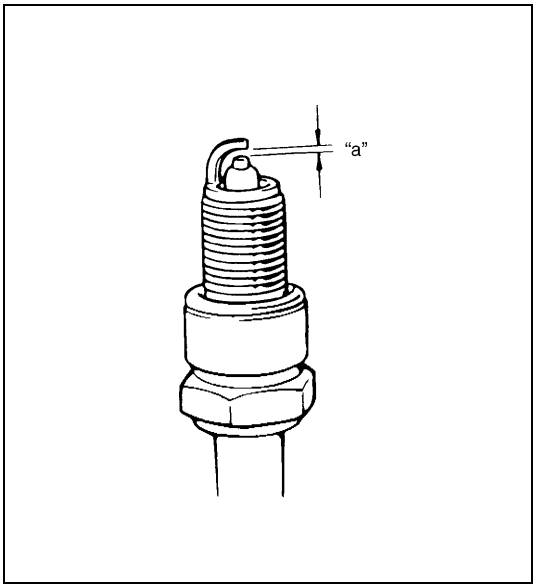

5) If any abnormality is found in nickel spark plug, adjust air gap, clean with spark plug cleaner or replace them with specified new plugs.
   For iridium/platinum spark plugs, replace them with new plugs.

Spark plug air gap “a”
1.0 – 1.1 mm (0.040 – 0.043 in.)

Spark plug type for engine not equipped with camshaft position control (VVT) system
NGK: BKR6E-11 (Nickel spark plug)
DENSO: K20PR-U11 (Nickel spark plug)
Spark plug type for engine equipped with camshaft position control (VVT) system
NGK: IFR6J11 (Iridium / Platinum spark plug)

6) Install spark plugs and torque them to specification.

Tightening torque
Spark plug: 25 N·m (2.5 kg-m, 18.0 lb-ft)

7) Install ignition coil assemblies referring to “Ignition Coil Assembly” in this section.
8) Install high-tension cords securely by gripping their caps.
9) Install cylinder head upper cover.

Ignition Coil Assembly (Including Ignitor)

1) Disconnect negative cable at battery.
2) Remove cylinder head upper cover.
3) Disconnect ignition coil connector.

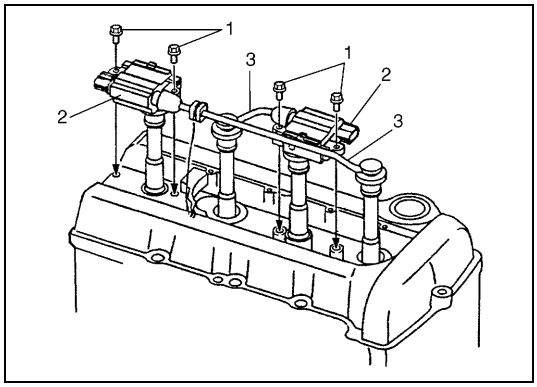

4) Disconnect high-tension cord (3) from ignition coil assembly (2).
5) Remove ignition coil bolts (1) and then pull out ignition coil assembly.

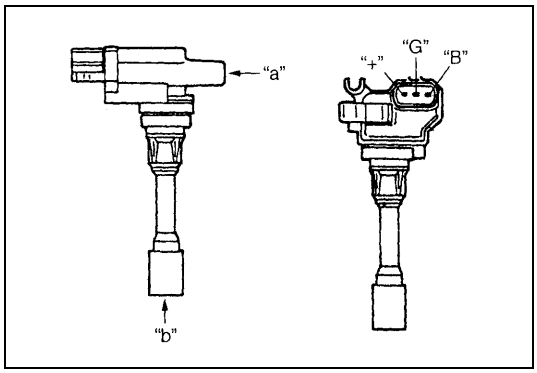

6) Measure secondary coil resistance of ignition coil assembly. If coil resistance is out of specification, replace ignition coil assembly.

Secondary coil resistance
"a" – "b": 7.6 – 10.2 kΩ (at 20 °C, 68 °F)

7) Install ignition coil assembly.
8) Tighten ignition coil bolts, and then connect ignition coil coupler.
9) Install high-tension cord to ignition coil assembly while gripping its cap.
10) Install cylinder head upper cover.

Ignition Timing

NOTE:

- **Ignition timing is not adjustable. If ignition timing is out of specification, check system related parts.**
- **Before starting engine, place transmission gear shift lever in "Neutral" (shift selector lever to "P" range for A/T model), and set parking brake.**

Inspection

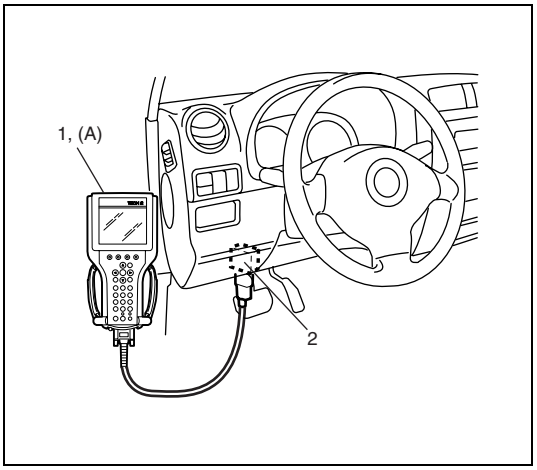

1) When using SUZUKI scan tool (1), connect SUZUKI scan tool to DLC (2) with ignition switch OFF.

   Special tool
   (A): SUZUKI scan tool

2) Start engine and warm it up to normal operating temperature.
3) Make sure that all of electrical loads except ignition are switched off.
4) Check to be sure that idle speed is within specification.
   (Refer to "Idle Speed/Idle Air Control (IAC) Duty Inspection" in Section 6E.)

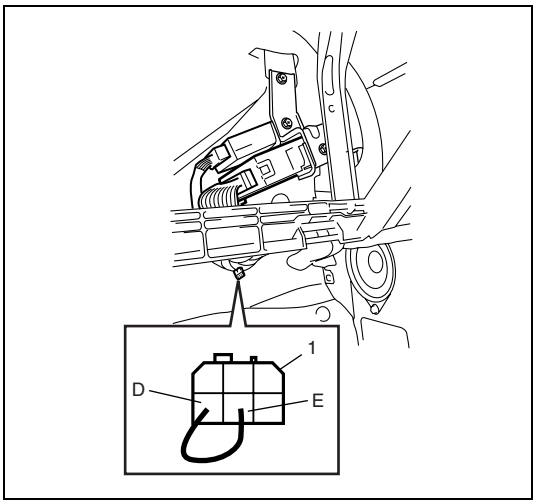

5) Fix ignition timing to initial one as follows.
   a) When using SUZUKI scan tool:
      Select "Misc Test" mode on SUZUKI scan tool and fix ignition timing to initial one.
   b) When not using SUZUKI scan tool: (engine not equipped with VVT system)
      Disconnect scan tool from DLC, and connect D and E terminals of monitor connector (1) or E to body ground by using service wire so that ignition timing is fixed on initial one.

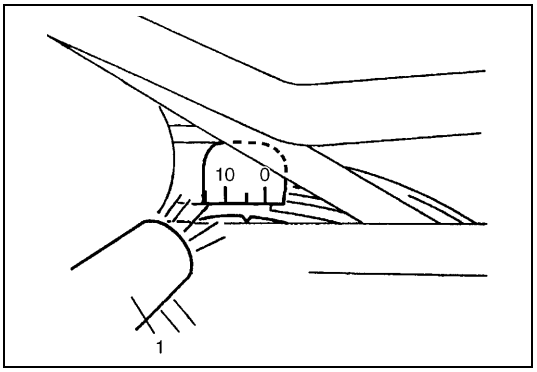

6) Using timing light (1), check that ignition timing is within specification.

   Initial ignition timing (test switch terminal grounded or fixed with SUZUKI scan tool)
   5 ± 3° BTDC at idle speed

   Ignition order
   1-3-4-2

7) If ignition timing is out of specification, check the followings:
   - CKP sensor
   - CKP sensor plate
   - CMP sensor
   - CMP sensor rotor tooth of camshaft
   - TP sensor
   - Test switch signal circuit
   - VSS
   - Timing chain cover installation
8) After checking Initial Ignition Timing, release ignition timing fixation by using SUZUKI scan tool or disconnecting service wire from monitor connector.
9) With engine idling (test switch terminal ungrounded, throttle opening at closed position and car stopped), check that ignition timing is about 4° – 20° BTDC (engine not equipped with VVT system) or 2° – 18° BTDC (engine equipped with VVT system). (Constant variation within a few degrees from 4° – 20° (engine not equipped with VVT system) or 2° – 18° (engine equipped with VVT system) indicates no abnormality but proves operation of electronic timing control system.) Also, check that increasing engine speed advances ignition timing.

   If above check results are not satisfactory, check CKP sensor, test switch terminal circuit and ECM.

Special Tools

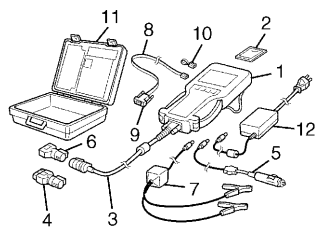

Tech 2 kit (SUZUKI scan tool) (See NOTE.)

NOTE:

This kit includes the following items and substitutes for the Tech 1A kit.
1. Tech 2, 2. PCMCIA card, 3. DLC cable, 4. SAE 16/19 adapter, 5. Cigarette cable, 6. DLC loopback adapter, 7. Battery power cable, 8. RS232 cable, 9. RS232 adapter, 10. RS232 loopback connector, 11. Storage case, 12. Power supply

Tightening Torque Specification

Fastening part	Tightening torque		
	N•m	kg-m	lb-ft
Spark plug	25	2.5	18.0

SECTION 6G2

CRANKING SYSTEM (K9K ENGINE)

WARNING:

For vehicles equipped with a Supplemental Restraint (Air Bag) System:

- **Service on and around the air bag system components or wiring must be performed only by an authorized SUZUKI dealer. Refer to "System Components and Wiring Location View and Connections" under "General Description" in Section 10B in order to confirm whether you are performing service on or near the air bag system components or wiring. Please observe all WARNINGS and "Service Precautions" under "On-Vehicle Service" in Section 10B before performing service on or around the air bag system components or wiring. Failure to follow WARNINGS could result in unintentional activation of the system or could render the system inoperative. Either of these two conditions may result in severe injury.**
- **Technical service work must be started at least 90 seconds after the ignition switch is turned to the "LOCK" position and the negative cable is disconnected from the battery. Otherwise, the system may be activated by reserve energy in the Sensing and Diagnostic Module (SDM).**

NOTE:

For the items with asterisk (*) in the "CONTENTS" below, refer to the same section of the Service Manual mentioned in "FOREWORD" of this manual.

CONTENTS

General Description 6G2-2
Cranking System Circuit Diagram 6G2-2
Diagnosis 6G2-2
Cranking System Symptom Diagnosis 6G2-2
Cranking System Test ..... 6G2- *
Pull-in test ..... 6G2- *
Hold-in test ..... 6G2- *
Plunger and pinion return test ..... 6G2- *
No-load performance test ..... 6G2- *
ON-Vehicle Service ..... 6G2- *
Starting Motor Dismounting and Remounting ..... 6G2- *
Dismounting ..... 6G2- *
Remounting ..... 6G2- *
Tightening Torque Specification ..... 6G2- *

General Description

Cranking System Circuit Diagram

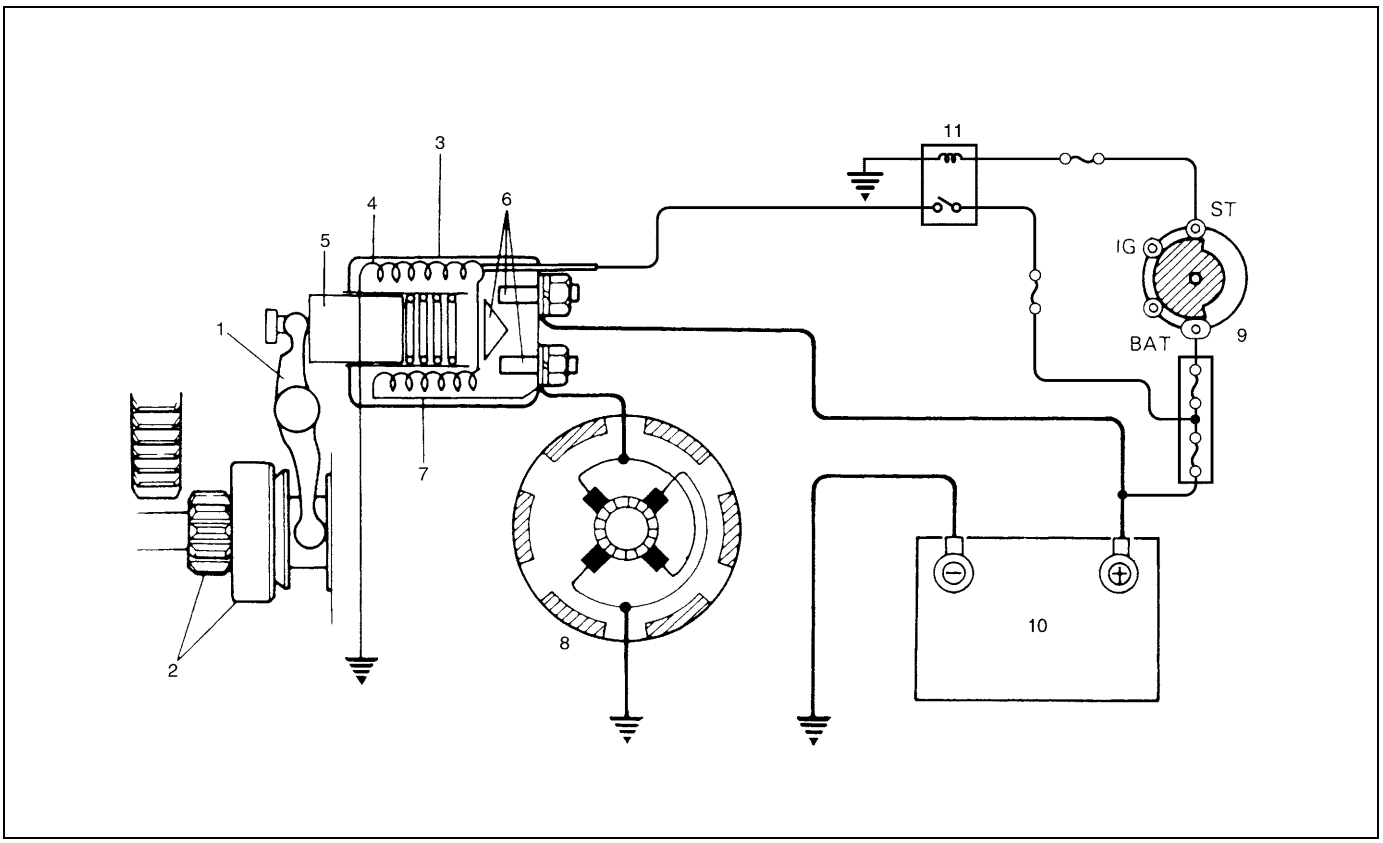

1. Pinion drive lever	5. Plunger	9. Ignition & Starter switch
2. Pinion & Over-running clutch	6. Magnetic switch contacts	10. Battery
3. Magnetic switch	7. Pull-in coil	11. Starting motor control relay
4. Hold-in coil	8. Starting motor	

Diagnosis

Cranking System Symptom Diagnosis

Possible symptoms due to starting system trouble would be as follows:

- Starting motor does not run (or runs slowly)
- Starting motor runs but fails to crank engine
- Abnormal noise is heard

Proper diagnosis must be made to determine exactly where the cause of each trouble lies in battery, wiring harness, (including starting motor switch), starting motor control relay, starting motor or engine.
Do not remove motor just because starting motor does not run. Check following items and narrow down scope of possible causes.

1) Condition of trouble
2) Tightness of battery terminals (including ground cable connection on engine side) and starting motor terminals
3) Discharge of battery
4) Mounting of starting motor

Condition	Possible Cause	Correction
Motor not running (No operating sound of magnetic switch)	Battery run down	Recharge battery.
	Battery voltage too low due to battery deterioration	Replace battery.
	Poor contact in battery terminal connection	Retighten or replace.
	Loose grounding cable connection	Retighten.
	Fuse set loose or blown off	Tighten or replace.
	Poor contacting action of ignition switch and magnetic switch	Replace.
	Lead wire coupler loose in place	Retighten.
	Open-circuit between ignition switch and magnetic switch	Repair.
	Open-circuit in pull-in coil	Replace starting motor.
	Brushes are seating poorly or worn down	Replace starting motor.
	Poor sliding of plunger and/or pinion	Replace starting motor.
	Faulty starting motor control relay	Replace.
Motor not running (Operating sound of magnetic switch heard)	Battery run down	Recharge battery.
	Battery voltage too low due to battery deterioration	Replace battery.
	Loose battery cable connections	Retighten.
	Burnt main contact point, or poor contacting action of magnetic switch	Replace starting motor.
	Brushes are seating poorly or worn down	Replace starting motor.
	Weakened brush spring	Replace starting motor.
	Burnt commutator	Replace starting motor.
	Layer short-circuit of armature	Replace starting motor.
	Crankshaft rotation obstructed	Repair.
Starting motor running but too slow (small torque) (If battery and wiring are satisfactory, inspect starting motor)	Insufficient contact of magnetic switch main contacts	Replace starting motor.
	Layer short-circuit of armature	Replace starting motor.
	Disconnected, burnt or worn commutator	Replace starting motor.
	Worn brushes	Replace starting motor.
	Weakened brush springs	Replace starting motor.
	Burnt or abnormally worn end bush	Replace starting motor.
Starting motor running, but not cranking engine	Worn pinion tip	Replace starting motor.
	Poor sliding of over-running clutch	Replace starting motor.
	Over-running clutch slipping	Replace starting motor.
	Worn teeth of ring gear	Replace flywheel.
Noise	Abnormally worn bush	Replace starting motor.
	Worn pinion or worn teeth of ring gear	Replace starting motor or flywheel.
	Poor sliding of pinion (failure in return movement)	Replace starting motor.
	Worn internal or planetary gear teeth	Replace starting motor.
	Lack of oil in each part	Replace starting motor.
Starting motor does not stop running	Fused contact points of magnetic switch	Replace starting motor.
	Short-circuit between turns of magnetic switch coil (layer short-circuit)	Replace starting motor.
	Failure of returning action in ignition switch	Replace.

SECTION 6H

CHARGING SYSTEM (M13 ENGINE)

WARNING:

For vehicles equipped with a Supplemental Restraint (Air Bag) System

- **Service on and around the air bag system components or wiring must be performed only by an authorized SUZUKI dealer. Refer to "Air Bag System Components and Wiring Location View" under "General Description" in air bag system section in order to confirm whether you are performing service on or near the air bag system components or wiring. Please observe all WARNINGS and "Service Precautions" under "On-Vehicle Service" in air bag system section before performing service on or around the air bag system components or wiring. Failure to follow WARNINGS could result in unintentional activation of the system or could render the system inoperative. Either of these two conditions may result in severe injury.**
- **Technical service work must be started at least 90 seconds after the ignition switch is turned to the "LOCK" position and the negative cable is disconnected from the battery. Otherwise, the system may be activated by reserve energy in the Sensing and Diagnostic Module (SDM).**

NOTE:

For the items with asterisk (*) in the "CONTENTS" below, refer to the same section of the Service Manual mentioned in "FOREWORD" of this manual.

CONTENTS

General Description 6H-2
Battery ..... 6H- *
Generator 6H-2
Diagnosis 6H-3
Battery ..... 6H- *
Generator 6H-3
On-Vehicle Service ..... 6H- *
Battery ..... 6H- *
Jump starting in case of emergency ..... 6H- *
Dismounting ..... 6H- *
Handling ..... 6H- *
Remounting ..... 6H- *
Generator ..... 6H- *
Generator belt ..... 6H- *
Unit Repair Overhaul 6H-6
Generator 6H-6
Dismounting ..... 6H- *
Remounting ..... 6H- *
Disassembly and reassembly 6H-6
Inspection 6H-7
Specifications 6H-10
Battery ..... 6H- *
Generator 6H-10
Tightening Torque Specification 6H-10

General Description

Generator

The generator is a small and high performance type with an IC regulator incorporated.
The internal components are connected electrically as shown below figure.

The generator features are as follows:

- Solid state regulator is mounted inside the generator.
- All regulator components are enclosed into a solid mold.
- This unit along with the brush holder assembly is attached to the rear housing.
- The IC regulator uses integrated circuits and controls the voltage produced by the generator, and the voltage setting cannot be adjusted.
- The generator rotor bearings contain enough grease to eliminate the need for periodic lubrication. Two brushes carry current through the two slip rings to the field coil mounted on the rotor, and under normal conditions will provide long period of attention-free service.
- The stator windings are assembled on the inside of a laminated core that forms part of the generator frame.

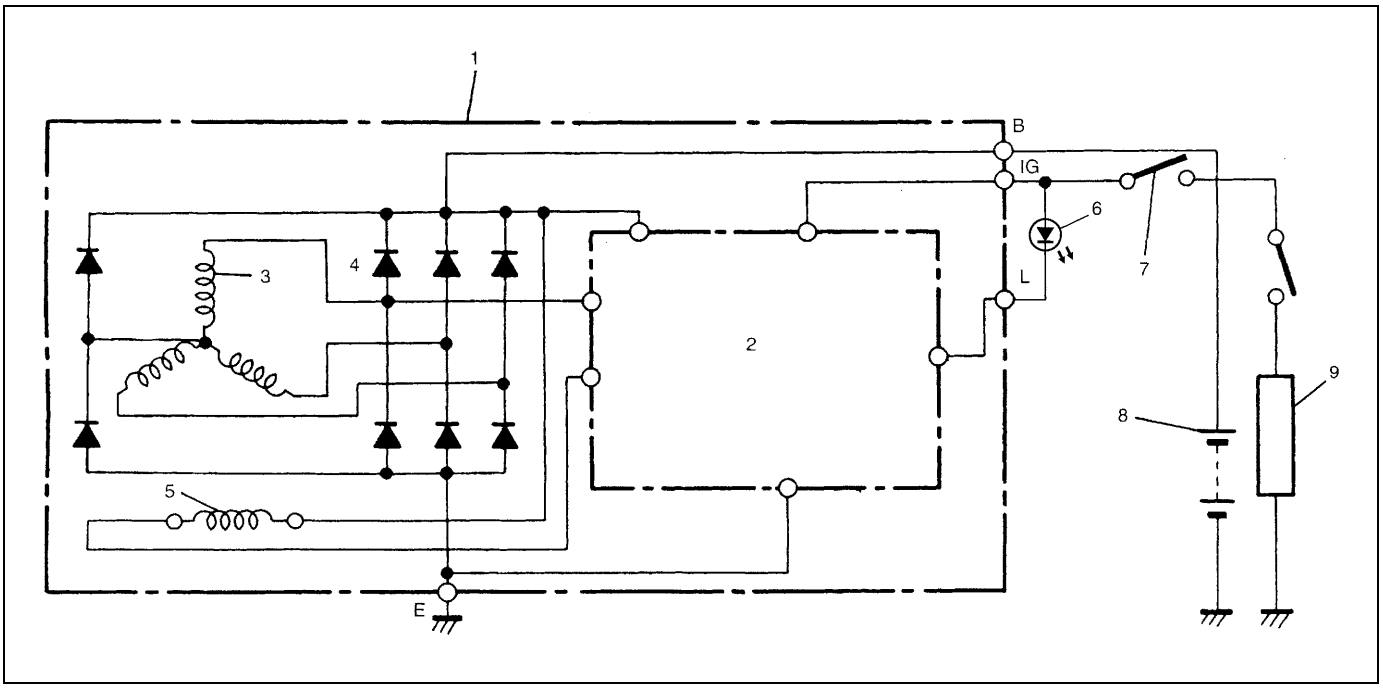

1. Generator with regulator assembly	4. Diode	7. Main switch
2. I.C. regulator	5. Field coil (rotor coil)	8. Battery
3. Stator coil	6. Charge indicator light	9. Load

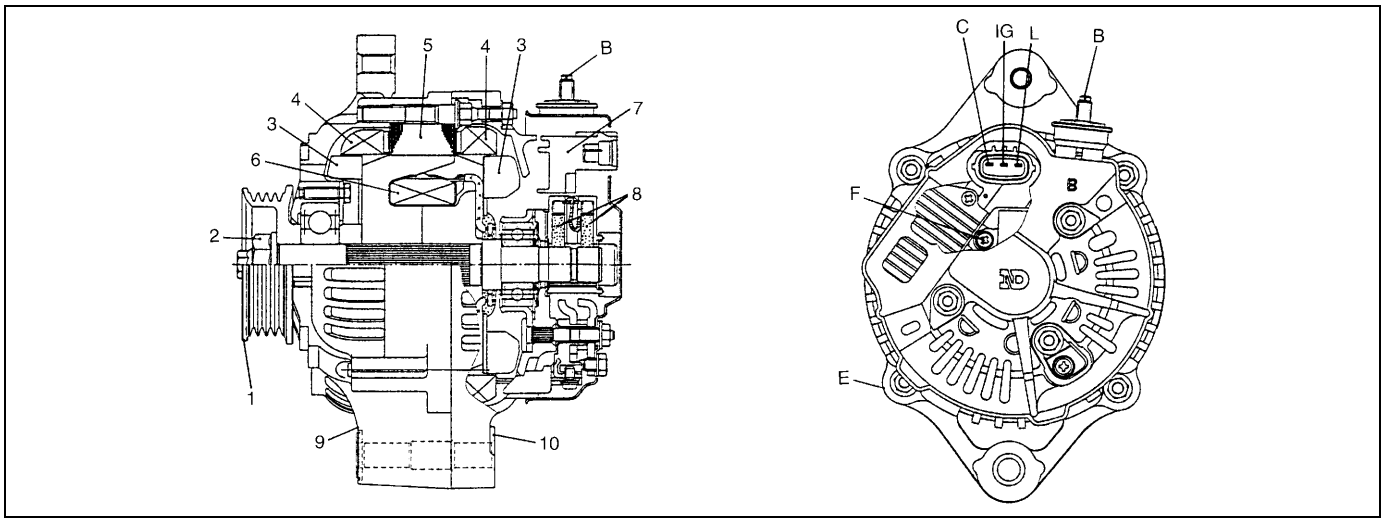

1. Pulley	5. Stator core	9. Front housing	E: Ground
2. Pulley nut	6. Field coil	10. Rear housing	F: Field coil terminal
3. Rotor fan	7. Regulator	B: Generator output (Battery terminal)	IG: Ignition terminal
4. Stator coil	8. Brush	C: C terminal	L: Lamp terminal

Diagnosis

Generator

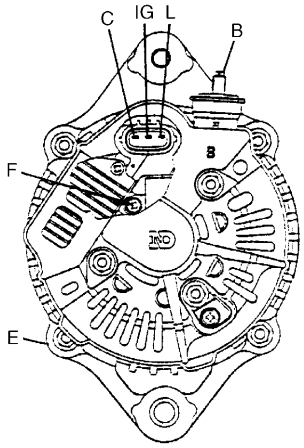

CAUTION:
- **Do not mistake polarities of IG terminal and L terminal.**
- **Do not make a short circuit between IG and L terminals. Always connect these terminals through a lamp.**
- **Do not connect any load between L and E.**
- **When connecting a charger or a booster battery to vehicle battery, refer to this section describing battery charging.**

B: Generator output (Battery terminal)
E: Ground
C: C terminal
IG: Ignition terminal
F: Field coil terminal
L: Lamp terminal

Trouble in charging system will show up as one or more of following conditions:

1) Faulty indicator lamp operation.
2) An undercharged battery as evidenced by slow cranking or indicator dark.
3) An overcharged battery as evidenced by excessive spewing of electrolyte from vents.

Noise from generator may be caused by a loose drive pulley, loose mounting bolts, worn or dirty bearings, defective diode, or defective stator.

Faulty Indicator Lamp Operation

Condition	Possible Cause	Correction
Charge light does not light with ignition ON and engine off	Fuse blown	Check fuse.
	Indicator lamp (LED) faulty	Replace combination meter.
	Wiring connection loose	Tighten loose connection.
	IC regulator or field coil faulty	Check generator.
Charge light does not go out with engine running (battery requires frequent recharging)	Drive belt loose or worn	Adjust or replace drive belt.
	IC regulator or generator faulty	Check charging system.
	Wiring faulty	Repair wiring.

Undercharged Battery

This condition, as evidenced by slow cranking or indicator clear with red dot can be caused by one or more of the following conditions even though indicator lamp may be operating normal.
Following procedure also applies to cars with voltmeter and ammeter.

- Make sure that undercharged condition has not been caused by accessories left on for extended period of time.
- Check drive belt for proper tension.
- If battery defect is suspected, refer to “Battery” under “Diagnosis” in this section.
- Inspect wiring for defects. Check all connections for tightness and cleanliness, battery cable connections at battery, starting motor and ignition ground cable.

No-load Check

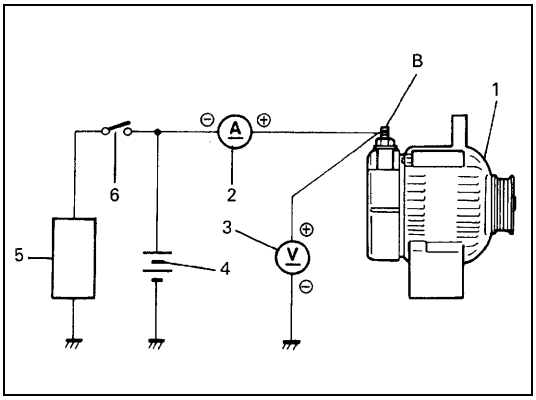

1) Connect voltmeter and ammeter as shown in the figure.

NOTE:

Use fully charged battery.

1. Generator
2. Ammeter (between generator (B) terminal and battery (+) terminal)
3. Voltmeter (between generator (B) terminal and ground)
4. Battery
5. Load
6. Switch

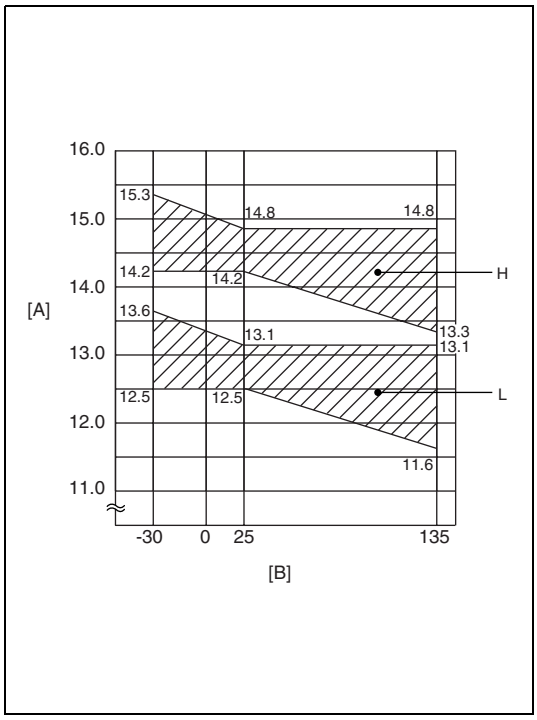

2) Run engine from idling up to 2,000 rpm and with all accessories turned off read meters.
   If voltage is higher than standard value, check ground of brushes.
   If brushes are not grounded, replace IC regulator.
   If voltage is below or in standard value, proceed to the following check.

Specification for undercharged battery (No-load check)
Current: 10 A
Voltage: 14.2 – 14.8 V at Hi (H) (at 25 °C, 77 °F)
Voltage: 12.5 – 13.1 V at Lo (L) (at 25 °C, 77 °F)

NOTE:

Consideration should be taken that voltage will differ somewhat with regulator case temperature as shown in the graph.

[A]: Regulated voltage (V)
[B]: Heatsink temperature (°C)

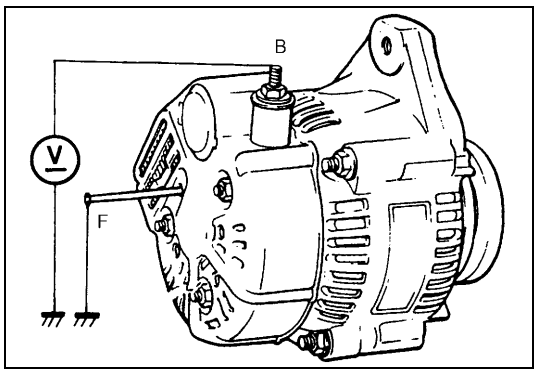

3) Ground F terminal and start engine, then measure voltage at B terminal as shown in the figure.
- Voltage is higher than standard value
  It is considered that generator itself is good but IC regulator has been damaged, replace IC regulator.
- Voltage is lower than standard value
  Generator itself has problem, check the generator.

Load Check

1) Run engine at 2,000 rpm and turn on head light and heater motor.
2) Measure current and if it is less than 20 A repair or replace generator.

Overcharged Battery

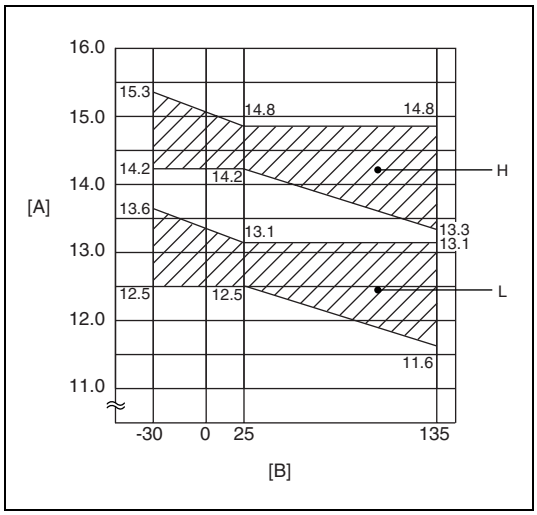

1) To determine battery condition, refer to “Battery” under “Diagnosis” in this section.
2) If obvious overcharged condition exists as evidenced by excessive spewing of electrolyte, measure generator B terminal voltage at engine 2,000 rpm.
3) If measured voltage is higher than upper limit value, proceed to disassembly section of generator service.
4) Check ground of brushes. If brushes are not grounded, replace IC regulator. Then check field coil for grounds and shorts, referring to “Inspection” under “Generator” in this section.

[A]: Regulated voltage (V)
[B]: Heatsink temperature (°C)

Unit Repair Overhaul

Generator

Disassembly and reassembly

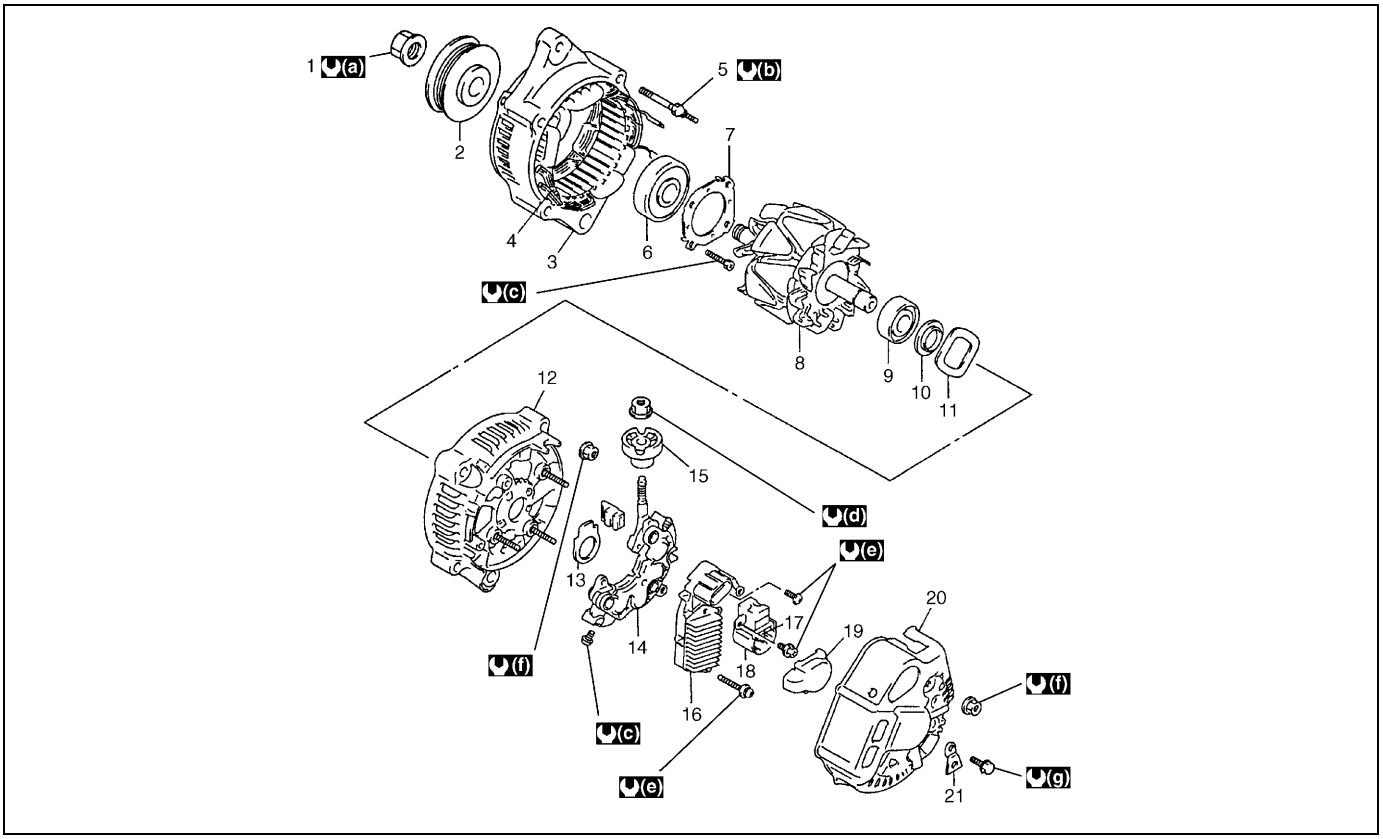

1. Pulley nut	8. Rotor	15. Insulator	(a) 111 N·m (11.1 kg-m, 80.5 lb-ft)
2. Pulley	9. End housing bearing	16. Regulator	(b) 9.8 N·m (0.98 kg-m, 7.0 lb-ft)
3. Drive end frame	10. Bearing cover	17. Brush	(c) 3.0 N·m (0.3 kg-m, 2.5 lb-ft)
4. Stator	11. Wave washer	18. Brush holder	(d) 3.6 N·m (0.36 kg-m, 3.0 lb-ft)
5. Stud bolt	12. Rear end frame	19. Brush holder cover	(e) 2.0 N·m (0.2 kg-m, 1.5 lb-ft)
6. Drive end bearing	13. Seal plate	20. Rear end cover	(f) 4.5 N·m (0.45 kg-m, 3.5 lb-ft)
7. Bearing retainer	14. Rectifier	21. Terminal plate	(g) 3.8 N·m (0.38 kg-m, 3.0 lb-ft)

Inspection

Rotor

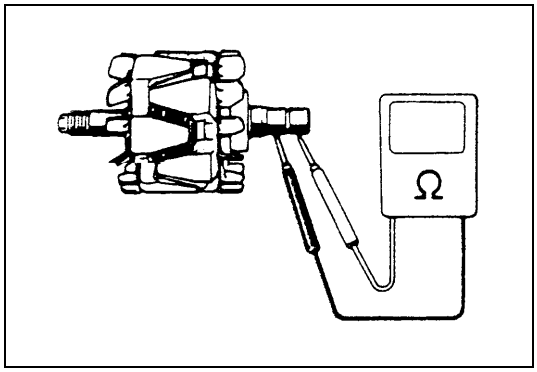

1) Using ohmmeter, check for continuity between slip rings of rotor. If there is no continuity, replace rotor.

Standard resistance between slip rings of rotor
2.7 – 3.1 Ω at 20 °C (68 °F)

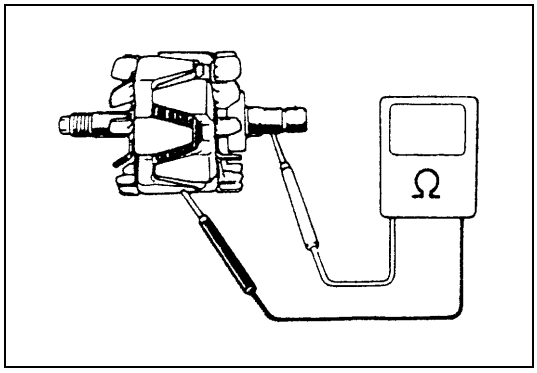

2) Using ohmmeter, check that there is no continuity between slip ring and rotor core. If there is continuity, replace rotor.
3) Check slip rings for roughness or scoring. If rough or scored, replace rotor.

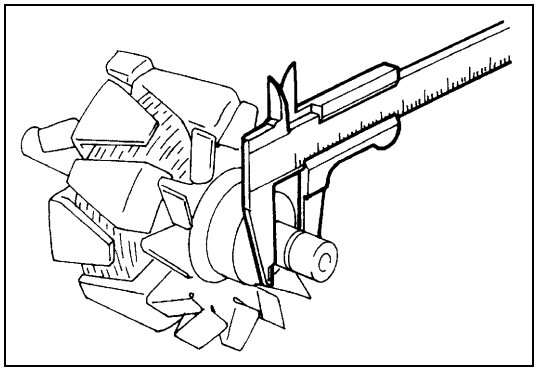

4) Check slip rings for roughness or scoring. If rough or scored, replace rotor.
Using a vernier caliper, measure the slip ring diameter.
If the diameter is less than minimum, replace the rotor.

Slip ring diameter
Standard: 14.2 – 14.4 mm (0.560 – 0.566 in.)
Limit: 12.8 mm (0.503 in.)

Stator

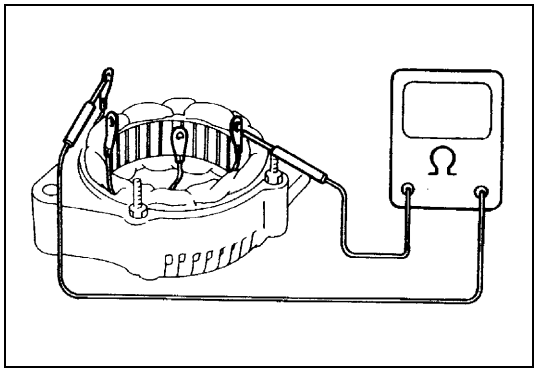

1) Using ohmmeter, check all leads for continuity.
If there is no continuity, replace stator.

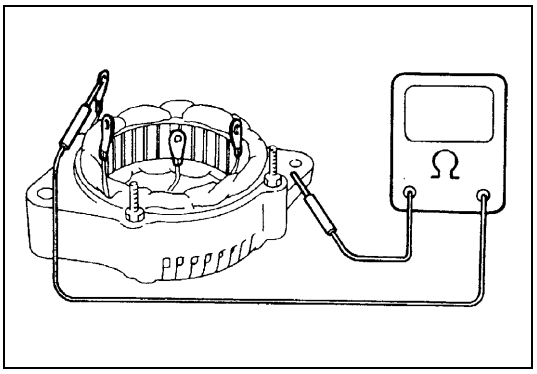

2) Using ohmmeter, check that there is no continuity between coil leads and stator core. If there is continuity, replace stator.

Brush and Brush Holder

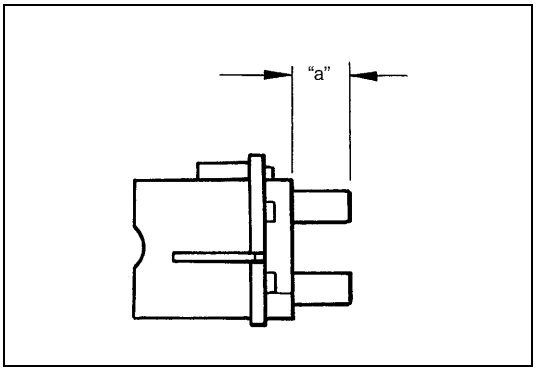

Check each brush for wear by measuring its length.
If brush is found worn down to limit, replace brush.

Exposed brush length "a"
Standard: 10.5 mm (0.41 in.)
Limit: 1.5 mm (0.05 in.)

Rectifier

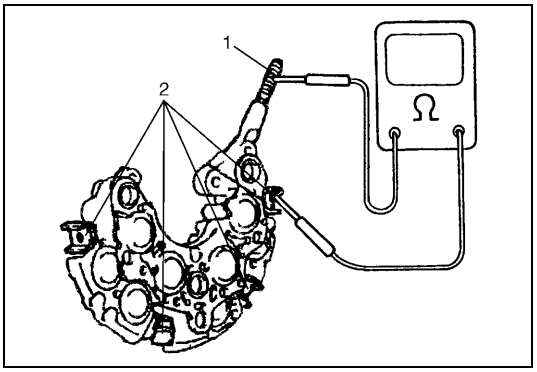

1) Using an ohmmeter, connect one tester probe to the "B" terminal (1) and the other to each rectifier terminal (2).
2) Reverse the polarity of the tester probes and repeat step 1).
3) Check that one shows continuity and the other shows no continuity.
   If there is continuity, replace the rectifier.

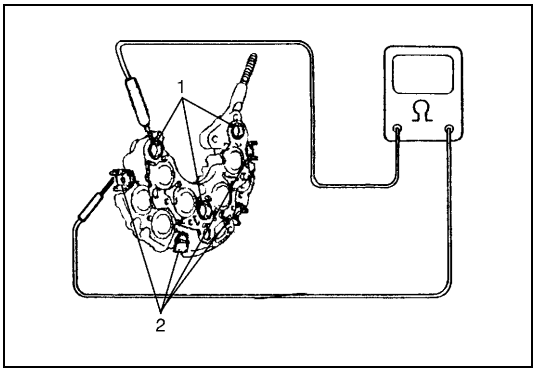

4) Using an ohmmeter, connect one tester probe to each negative terminal (1) and the other to each rectifier terminal (2).
5) Reverse the polarity of the tester probes and repeat step 4).
6) Check that one shows continuity and the other shows no continuity.
   If there is continuity, replace the rectifier.

Drive End Bearing

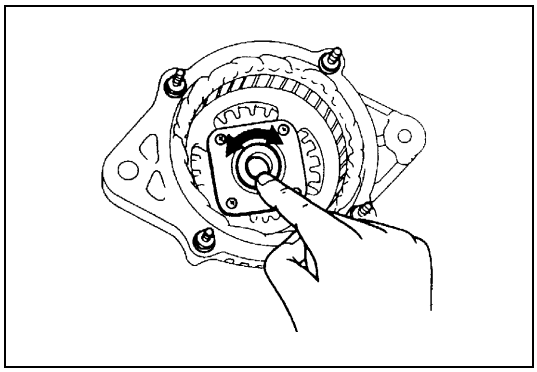

Check that the bearing is not rough or worn.

End Housing Bearing

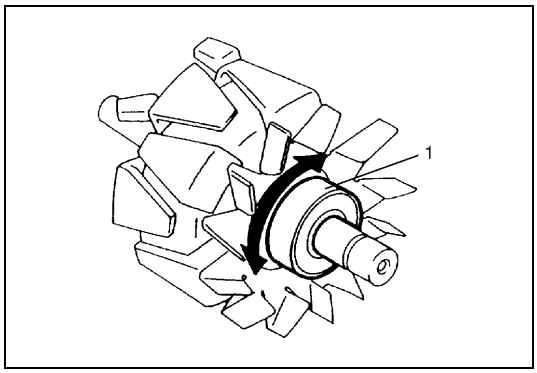

Check that the bearing is not rough or worn.
When removal is necessary, use bearing puller to remove end housing bearing (1).

CAUTION:
Be careful not to distort cooling fan blade while applying puller.

Specifications

Generator

Type	75 A type
Rated voltage	12 V
Nominal output	75 A
Permissible max. speed	18,000 r/min.
No-load speed	1,020 r/min.
Setting voltage	14.2 – 14.8 V (Hi), 12.5 – 13.1 V (Lo)
Permissible ambient temperature	–30 to 90 °C (–22 to 194 °F)
Polarity	Negative ground
Rotation	Clockwise viewed from pulley side

Tightening Torque Specification

Fastening part	Tightening torque		
	N•m	kg-m	lb-ft
Body ground bolt	8	0.8	6.0
Generator mounting bolt (upper side)	23	2.3	16.5
Generator mounting bolt (lower side)	50	5.0	36.0
“B” terminal inner nut	3.6	0.36	2.5
“B” terminal outer nut	8	0.8	6.0
Pulley nut	111	11.1	80.5
Rear end frame nuts	4.5	0.45	3.5
Rear end cover nuts			
Stator stud bolts	9.8	0.98	7.0
Drive end bearing plate screws	3.0	0.3	2.5
Rectifier screws	3.0	0.3	2.5
Regulator and brush holder screws	2.0	0.20	1.5
Terminal plate bolt	3.8	0.38	3.0

SECTION 6H2

CHARGING SYSTEM (K9K ENGINE)

WARNING:

For vehicles equipped with a Supplemental Restraint (Air Bag) System:

- **Service on and around the air bag system components or wiring must be performed only by an authorized SUZUKI dealer. Refer to "System Components and Wiring Location View and Connectors" under "General Description" in Section 10B in order to confirm whether you are performing service on or near the air bag system components or wiring. Please observe all WARNINGS and "Service Precautions" under "On-Vehicle Service" in Section 10B before performing service on or around the air bag system components or wiring. Failure to follow WARNINGS could result in unintentional activation of the system or could render the system inoperative. Either of these two conditions may result in severe injury.**
- **Technical service work must be started at least 90 seconds after the ignition switch is turned to the "LOCK" position and the negative cable is disconnected from the battery. Otherwise, the system may be activated by reserve energy in the Sensing and Diagnostic Module (SDM).**

NOTE:

For the items with asterisk (*) in the "CONTENTS" below, refer to the same section of the Service Manual mentioned in FOREWORD of this manual.

CONTENTS

General Description 6H2-2
- Battery Description ..... 6H2- *
  - Carrier and hold-down ..... 6H2- *
  - Electrolyte freezing ..... 6H2- *
  - Sulfation ..... 6H2- *
  - Built-in indicator (if equipped) ..... 6H2- *
  - Care of battery ..... 6H2- *
- Generator Description 6H2-2

Diagnosis 6H2-3
- Battery Inspection ..... 6H2- *
  - Visual inspection ..... 6H2- *
- Generator Symptom Diagnosis 6H2-3
  - Charging indicator lamp operation 6H2-3
  - Undercharged battery ..... 6H2- *

On-Vehicle Service ..... 6H2- *
- Jump Starting in Case of Emergency ..... 6H2- *
  - With auxiliary (booster) battery ..... 6H2- *
  - With charging equipment ..... 6H2- *
- Battery Dismounting and Remounting ..... 6H2- *
  - Dismounting ..... 6H2- *
  - Handling ..... 6H2- *
  - Remounting ..... 6H2- *
- Generator Drive Belt Tensioner Components ..... 6H2- *
- Generator Drive Belt Removal and Installation ..... 6H2- *
- Generator Drive Belt Inspection ..... 6H2- *
- Vacuum Pump Inspection ..... 6H2- *
- Generator Dismounting and Remounting ..... 6H2- *

Specification ..... 6H2- *
- Battery ..... 6H2- *
- Generator ..... 6H2- *

Tightening Torque Specification ..... 6H2- *

Special Tools ..... 6H2- *

General Description

Generator Description

The generator is a small and high performance type with an IC regulator incorporated.
The internal components are connected electrically as shown below figure.

The generator features are as follows:

- Solid state regulator is mounted inside the generator.
- All regulator components are enclosed into a solid mold.
- This unit along with the brush holder assembly is attached to the rear housing.
- The IC regulator uses integrated circuits and controls the voltage produced by the generator, and the voltage setting cannot be adjusted.
- The generator rotor bearings contain enough grease to eliminate the need for periodic lubrication. Two brushes carry current through the two slip rings to the field coil mounted on the rotor, and under normal conditions will provide long period of attention-free service.
- The stator windings are assembled on the inside of a laminated core that forms part of the generator frame.

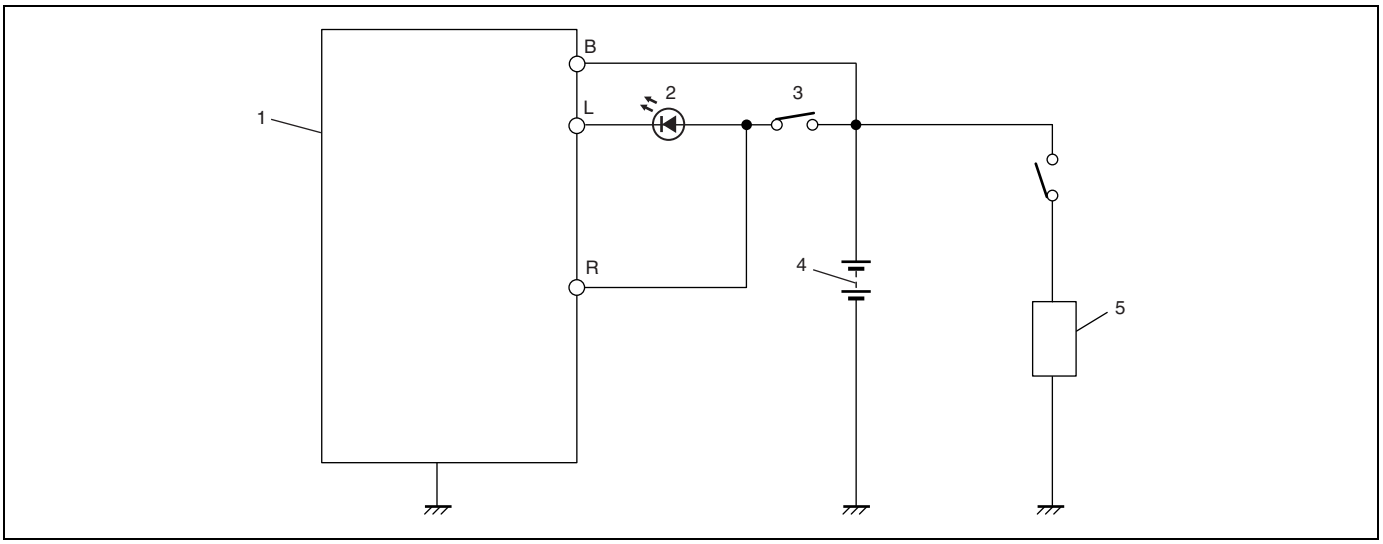

1. Generator with regulator assembly	3. Ignition switch	5. Load
2. Charge indicator light (LED)	4. Battery	

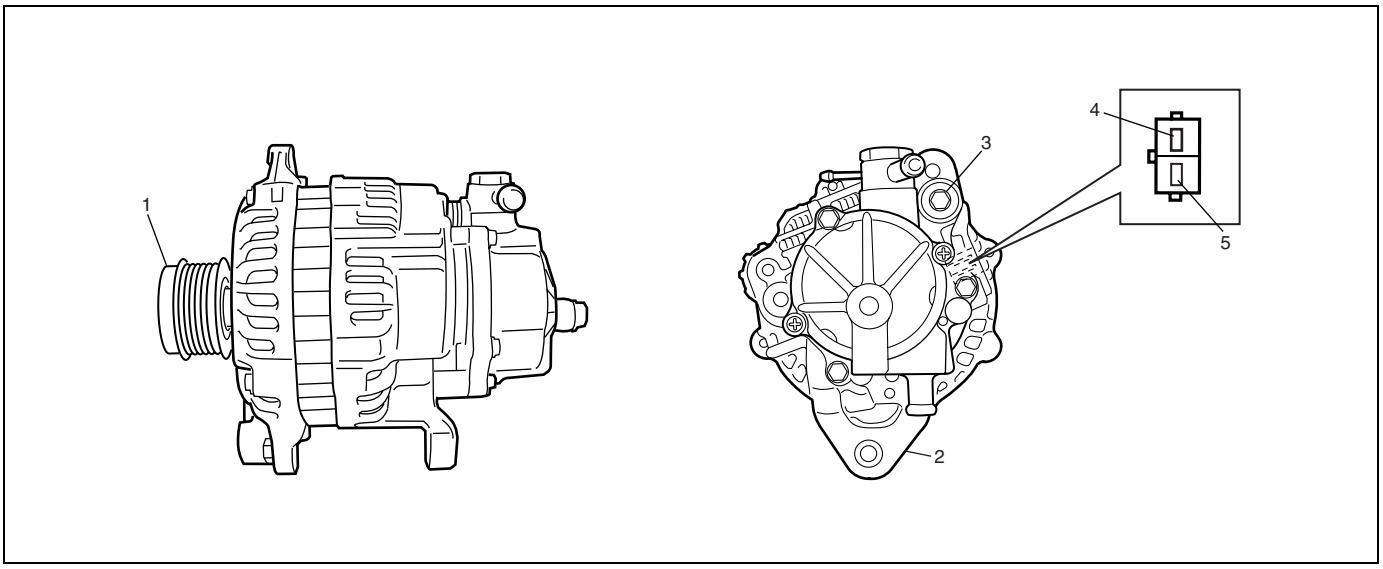

1. Pulley	3. “B” terminal	5. “R” terminal
2. Ground	4. “L” terminal	

Diagnosis

Generator Symptom Diagnosis

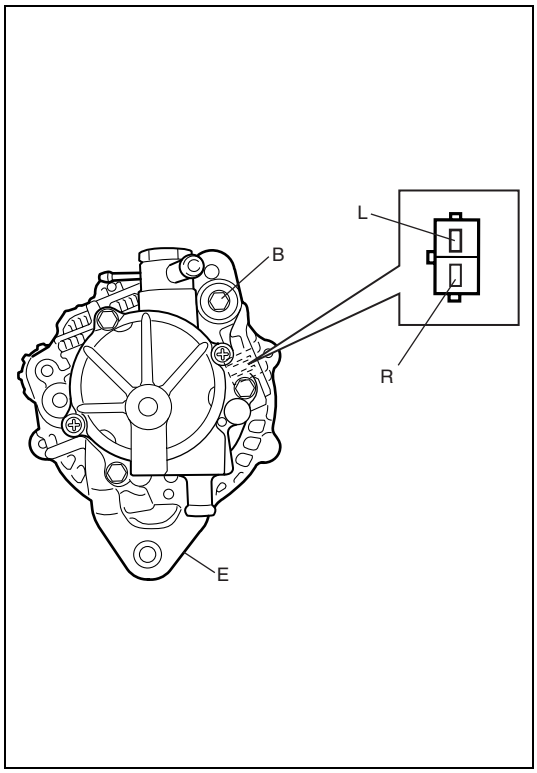

CAUTION:
- **Do not connect any load between L and E.**
- **When connecting charger or booster battery to vehicle battery, refer to "Jump starting in case of emergency" in this section.**

Trouble in charging system will show up as one or more of the following conditions:

1) Faulty indicator lamp operation.
2) An undercharged battery as evidenced by slow cranking or indicator dark.
3) An overcharged battery as evidenced by excessive spewing of electrolyte from vents.

Noise from generator may be caused by loose drive pulley, loose mounting bolts, worn or dirty bearings, defective diode, or defective stator.

B: Generator output (Battery terminal)
E: Ground
L: Lamp terminal

Charging indicator lamp operation

Condition	Possible Cause	Correction
Charge light does not light with ignition ON and engine off	Fuse blown	Check fuse.
	Indicator lamp (LED) faulty	Replace combination meter.
	Wiring connection loose	Tighten loose connection.
	IC regulator or field coil faulty	Replace generator.
Charge light does not go out with engine running (battery requires frequent recharging)	Drive belt loose or worn	Replace drive belt.
	IC regulator or generator faulty	Check charging system.
	Wiring faulty	Repair wiring.
Noise from radio	Condenser faulty	Replace generator.

SECTION 6K

EXHAUST SYSTEM (M13 ENGINE)

NOTE:

- **Whether following parts are used in the particular vehicle or not depends on specification. Be sure to bear this in mind when performing service work.**
  - **– Three-Way Catalytic Converter (TWC)**
- **For the items with asterisk (*) in the "CONTENTS" below, refer to the same section of the Service Manual mentioned in "FOREWORD" of this Manual.**

CONTENTS

General Description ..... 6K- *
Maintenance ..... 6K- *
On-Vehicle Service 6K-2
Exhaust Manifold .....6K- *
Exhaust Pipe.....6K- *

On-Vehicle Service

COMPONENTS

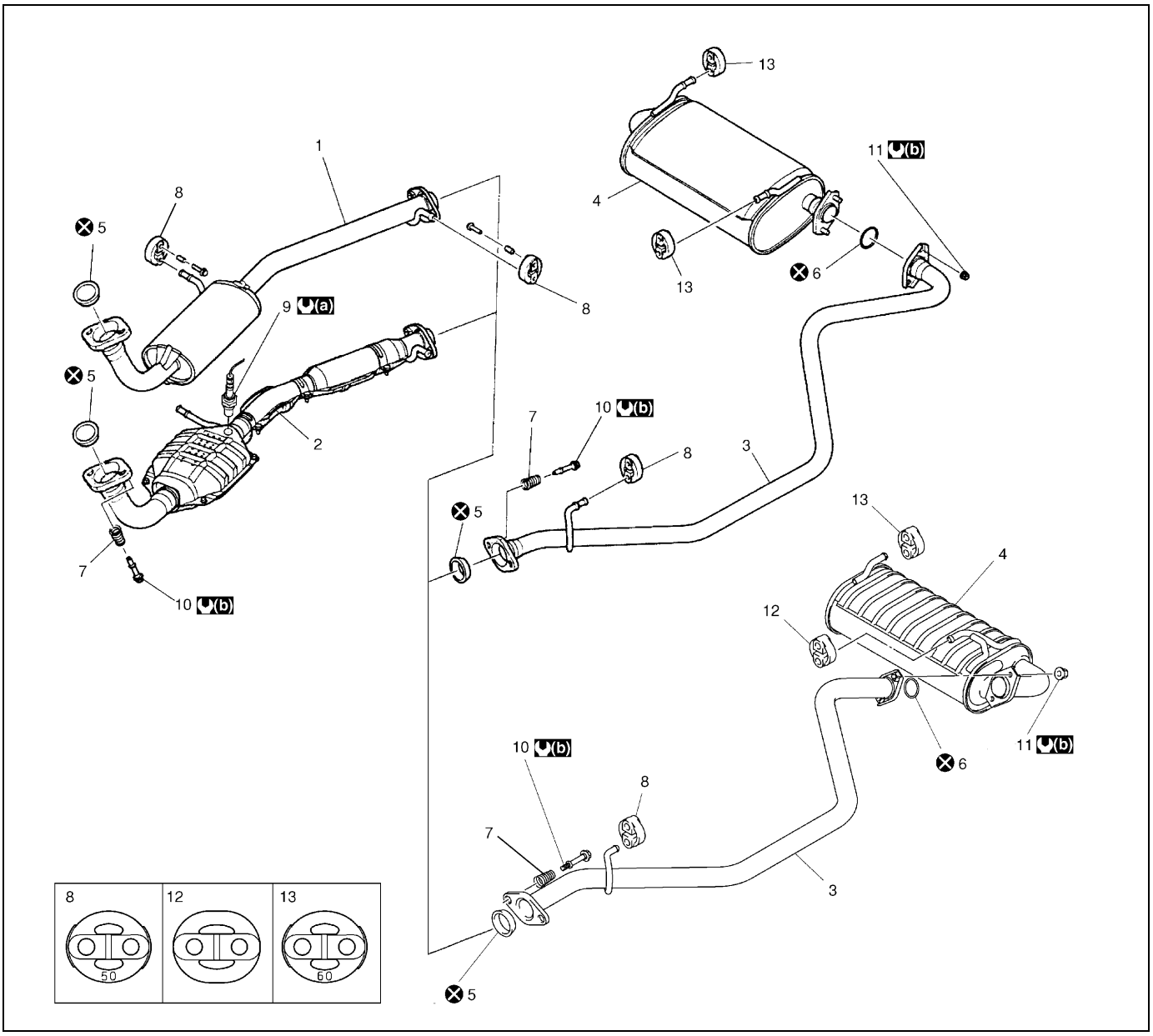

1. Exhaust pipe without TWC	7. Spring	13. Mounting No.3
2. Exhaust pipe with TWC	8. Mounting No.1	(a) 45 N·m (4.5 kg-m, 32.5 lb-ft)
3. Exhaust center pipe	9. Oxygen sensor	(b) 50 N·m (5.0 kg-m, 36.5 lb-ft)
4. Muffler	10. Mounting bolts	⊗ Do not reuse.
5. Seal ring	11. Mounting nuts	
6. Gasket	12. Mounting No.2	

SECTION 7A

MANUAL TRANSMISSION (M13 ENGINE MODEL)

WARNING:

For vehicles equipped with a Supplemental Restraint (Air Bag) System:

- **Service on and around the air bag system components or wiring must be performed only by an authorized SUZUKI dealer. Refer to "Air Bag System Components and Wiring Location View" under "General Description" in air bag system section in order to confirm whether you are performing service on or near the air bag system components or wiring. Please observe all WARNINGS and "Service Precautions" under "On-Vehicle Service" in air bag system section before performing service on or around the air bag system components or wiring. Failure to follow WARNINGS could result in unintentional activation of the system or could render the system inoperative. Either of these two conditions may result in severe injury.**
- **Technical service work must be started at least 90 seconds after the ignition switch is turned to the "LOCK" position and the negative cable is disconnected from the battery. Otherwise, the system may be activated by reserve energy in the Sensing and Diagnostic Module (SDM).**

CONTENTS

General Description 7A-2
- Transmission Components 7A-2

On-Vehicle Service 7A-3
- Manual Transmission Oil Change 7A-3
- Extension Case Oil Seal Replacement 7A-4
- Gear Shift Control Lever Assembly Components 7A-5
- Gear Shift Control Lever Assembly Removal and Installation 7A-6
- Gear Shift Control Lever Assembly Disassembly and Reassembly 7A-7
- Gear Shift Control Lever Assembly Inspection 7A-7

Unit Repair Overhaul 7A-8
- Manual Transmission Unit Components 7A-8
- Transmission Unit Dismounting and Remounting 7A-9
- Gear Shift Lever Case Assembly Components 7A-10
- Gear Shift Lever Case Assembly Removal and Installation 7A-11
- Gear Shift Lever Case Assembly Disassembly and Reassembly 7A-12
- Back Up Lamp Switch Removal and Installation 7A-13
- Back Up Lamp Switch Inspection 7A-13
- Manual Transmission Assembly Components 7A-14
- Manual Transmission Assembly Disassembly and Reassembly 7A-15
- Locating Spring Inspection 7A-19
- Front Case Disassembly and Assembly 7A-19
- Gear Shift Shaft and Fork Components 7A-20
- Gear Shift Fork Inspection 7A-20
- Input Shaft, Countershaft and Output Shaft Components 7A-21
- Input Shaft Assembly Disassembly and Reassembly 7A-22
- Input Shaft Assembly Inspection 7A-25
- Countershaft Assembly Disassembly and Reassembly 7A-26
- Countershaft Assembly Inspection 7A-28
- Output Shaft Assembly Disassembly and Reassembly 7A-29

Tightening Torque Specification 7A-30

Required Service Material 7A-30

Special Tool 7A-31

General Description

Transmission Components

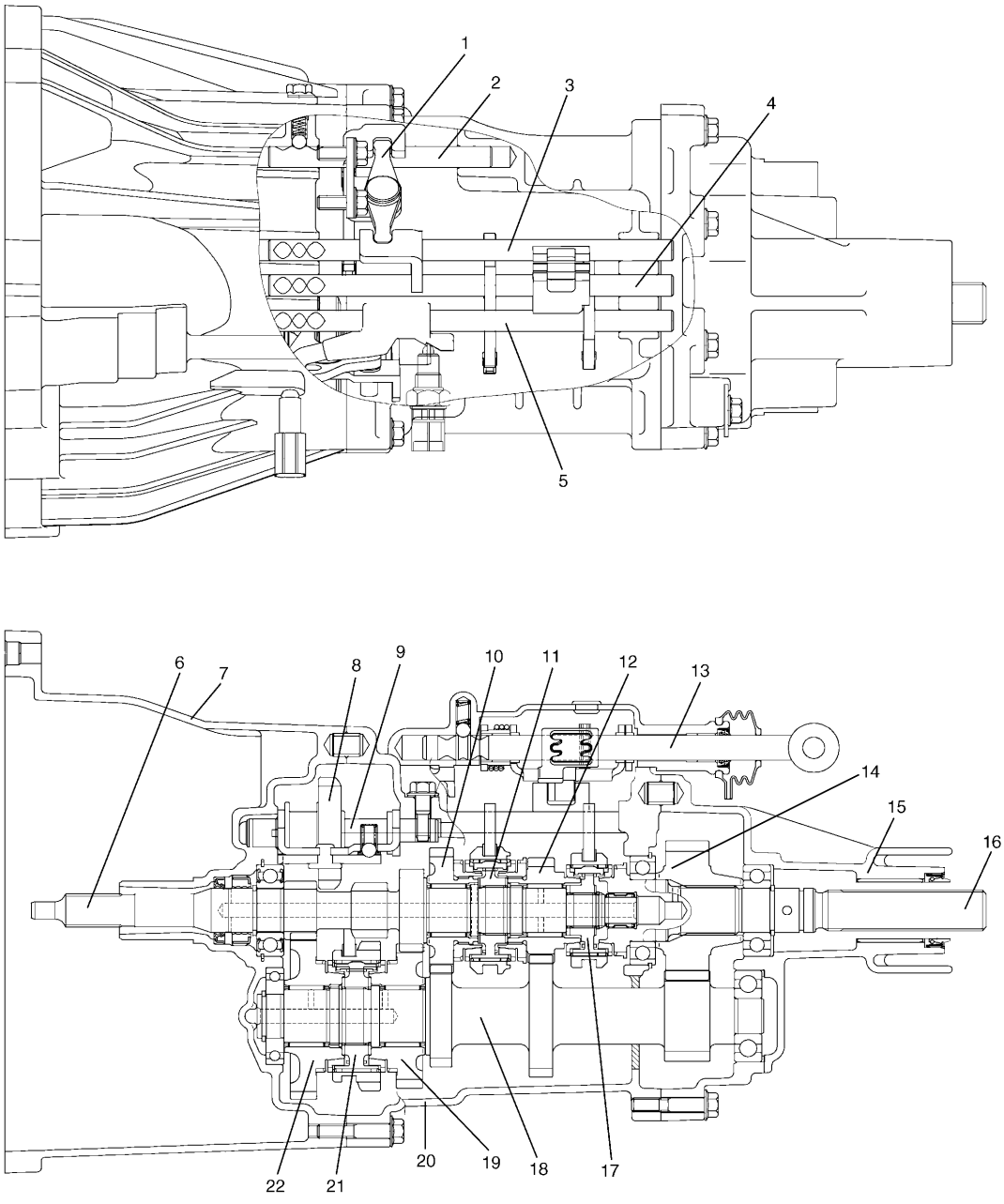

1. Low gear shift inverse lever	9. Reverse shaft	17. 5th speed synchronizer hub
2. Low speed gear shift shaft & fork	10. 4th gear	18. Countershaft
3. Low speed gear shift shaft	11. High speed synchronizer hub	19. 2nd gear
4. 5th & reverse gear shift shaft & fork	12. 3rd gear	20. Transmission rear case
5. High speed gear shift shaft & fork	13. Gear shift shaft	21. Low speed synchronizer hub
6. Input shaft	14. Output shaft gear	22. 1st gear
7. Transmission front case	15. Extension case	
8. Reverse idler gear	16. Output shaft	

On-Vehicle Service

CAUTION:
Do not reuse O-ring, circlip, spring pin, E-ring, oil seal, gasket, self locking nut and specified parts. Reuse of it can result in trouble.

NOTE:
Whenever vehicle is hoisted for any service work other than oil change, also be sure to check for oil leakage.

Manual Transmission Oil Change

1) Before changing or inspecting oil, be sure to stop engine and lift up vehicle horizontally.
2) With vehicle lifted up, check oil leakage. If leakage exists, correct or repair it.

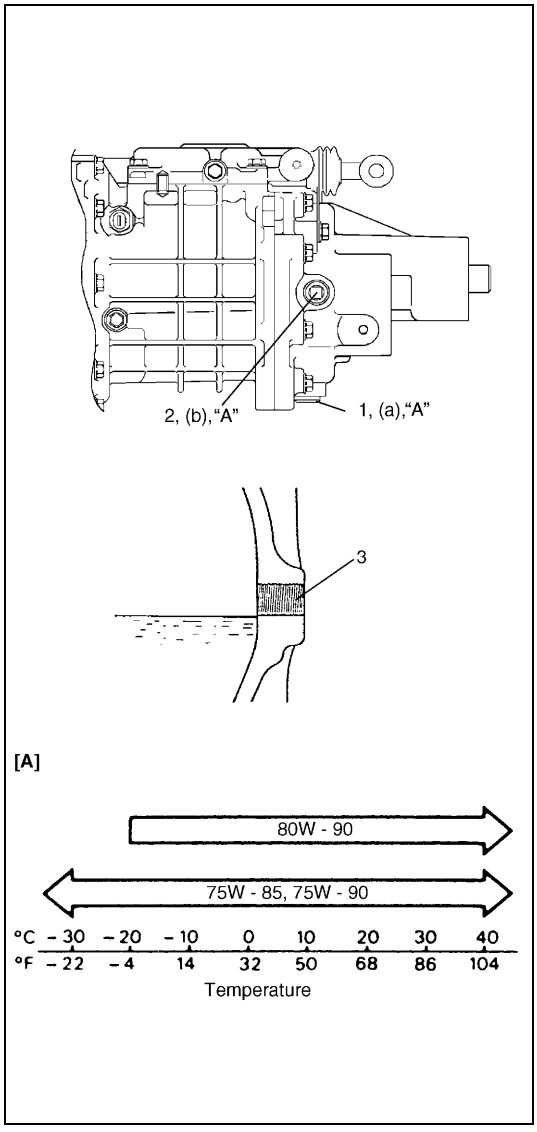

3) Remove oil filler plug (2).
4) Remove drain plug (1), and drain old oil.
5) Apply sealant to thread of drain plug, and then tighten it to specified torque.

"A": Sealant 99000-31260

Tightening torque
Transmission oil drain plug
(a): 23 N·m (2.3 kg-m, 17.0 lb-ft)

6) Pour new specified oil until oil level reaches bottom of oil filler plug hole (3) as shown in figure.

NOTE:
- **For SAE classification, refer to viscosity chart [A].**
- **It is highly recommended to use API GL-4 75W-90 gear oil.**

Transmission oil specification
: API GL-4

Reference:
Transmission oil capacity
: 1.3 liters (2.8/2.3 US/Imp. pt)

7) Apply sealant to thread of level / filler plug, and then tighten it to specified torque.

"A": Sealant 99000-31260

Tightening torque
Transmission oil level / filler plug
(a): 23 N·m (2.3 kg-m, 17.0 lb-ft)

Extension Case Oil Seal Replacement

Replacement

1) Drain transmission oil referring to “Manual Transmission Oil Change” in this section.
2) Remove gear shift control lever referring to “Gear Shift Control Lever Assembly Removal and Installation” in this section.
3) Remove propeller shaft No.1 referring to “Propeller Shafts” in Section 4B.
4) Support transmission with transmission jack.

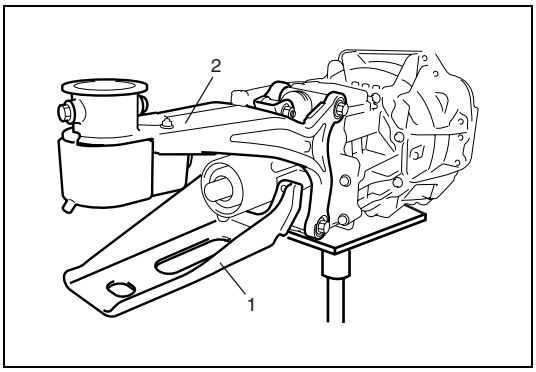

5) Remove rear mounting bracket (1).
6) Remove gear shift control arm (2).

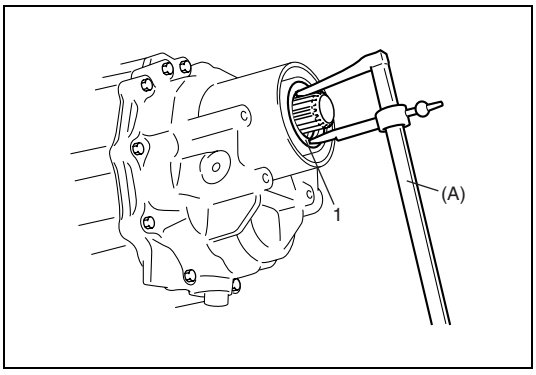

7) Remove extension case oil seal (1) using special tool.

Special tool
(A): 09913-50121

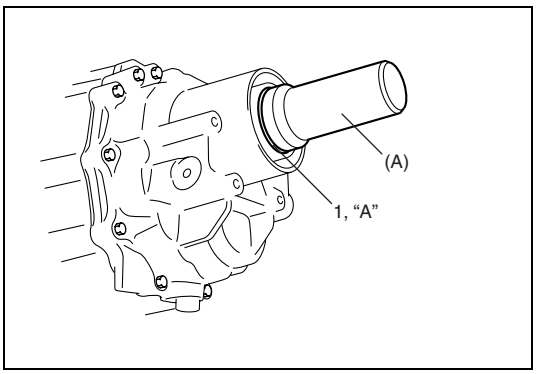

8) Install extension case oil seal (1) to extension case with its spring side inward.
   Use special tool and hammer for installation and apply grease to oil seal lip.

“A”: Grease 99000-25010

Special tool
(A): 09913-85210

9) Install gear shift control arm.
10) Install rear mounting bracket.
11) Install propeller shaft No.1 referring to “Propeller Shafts” in Section 4B.
12) Install gear shift control lever referring to “Gear Shift Control Lever Assembly Removal and Installation” in this section.
13) Fill transmission with oil referring to “Manual Transmission Oil Change” in this section.

Gear Shift Control Lever Assembly Components

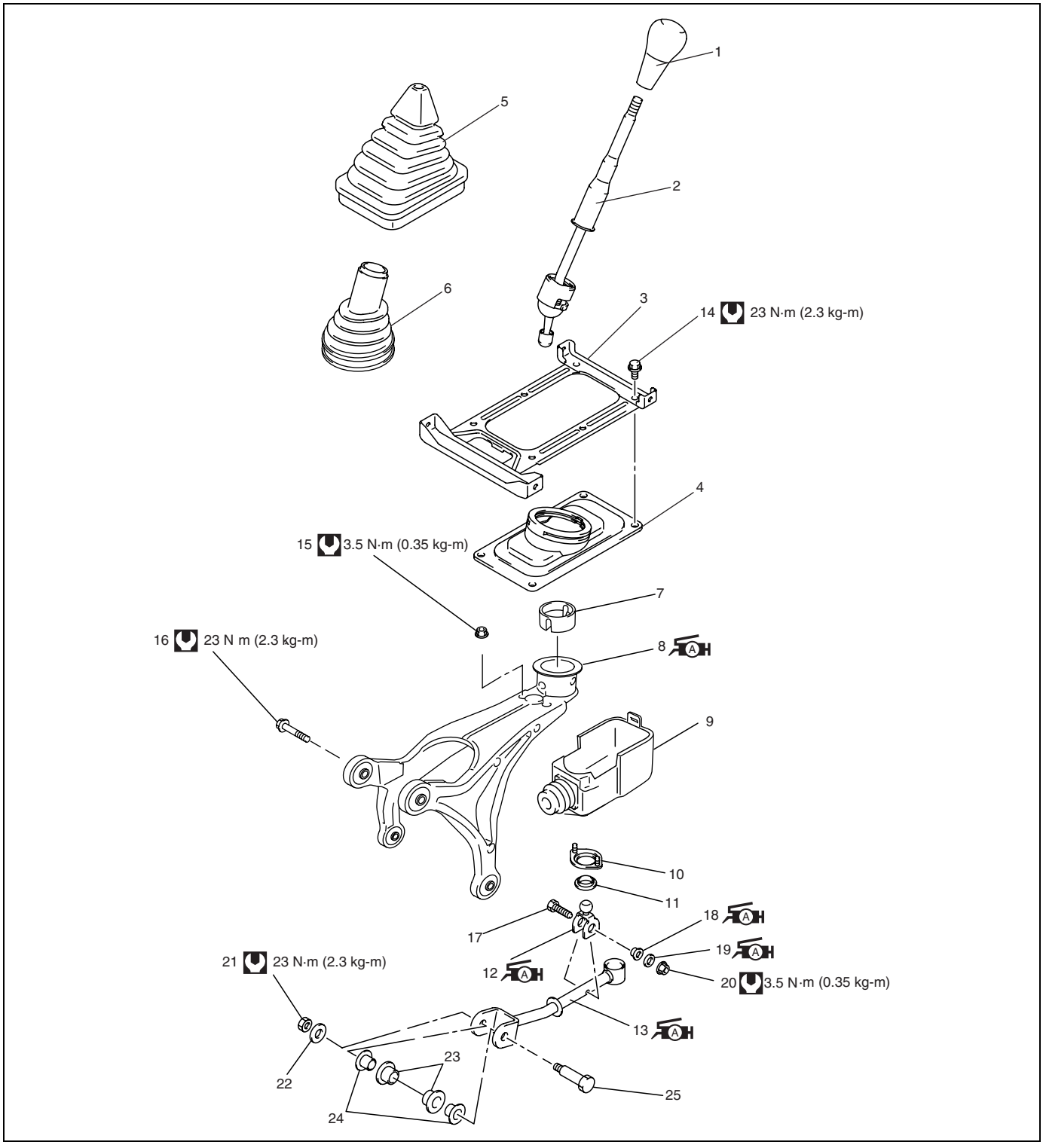

1. Gear shift knob	10. Gear shift stopper plate	19. Gear shift control joint washer : Apply grease 99000-25010 to washer.
2. Gear shift control lever	11. Gear shift control joint bush	20. Gear shift control joint nut
3. Gear shift control boot cover	12. Gear shift control joint : Apply grease 99000-25010 to connected part.	21. Shift lever No.1 nut
4. Gear shift lever No. 1 boot	13. Gear shift control shaft : Apply grease 99000-25010 to connected part.	22. Shift lever No.1 washer
5. Gear shift lever No. 3 boot	14. Gear shift control boot cover bolt	23. Joint inner bush
6. Gear shift lever No. 2 boot	15. Gear shift control boot plate nut	24. Joint outer bush
7. Gear shift lever case cover	16. Shift lever No.2 bolt	25. Shift lever No.1 bolt
8. Gear shift control arm : Apply grease 99000-25010 to arm inside.	17. Gear shift control joint bolt	Tightening torque
9. Gear shift lever No.4 boot	18. Gear shift control shaft bush : Apply grease 99000-25010 to bush.	

Gear Shift Control Lever Assembly Removal and Installation

Removal

1) Remove console box.

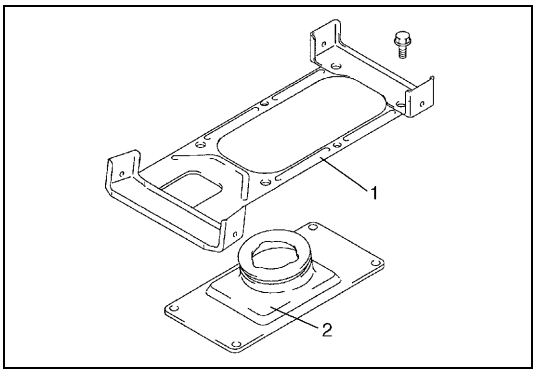

2) Remove gear shift control boot cover (1) from floor panel and gear shift lever No.1 boot (2).

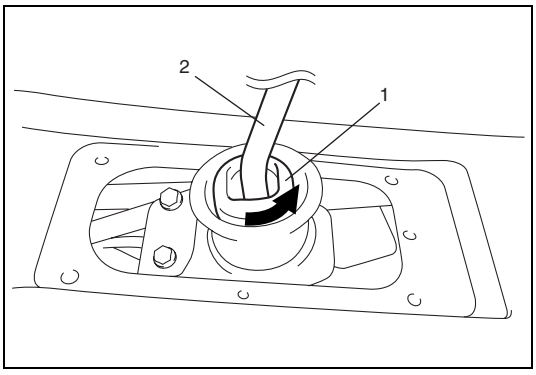

3) Remove gear shift control lever (2) while pushing and turning gear shift lever case cover (1) counterclockwise.
4) Drain transmission oil referring to “Manual Transmission Oil Change” in this section.
5) Remove exhaust pipe referring to “Exhaust Pipe” in Section 6K.
6) Remove propeller shaft No.1 and No.2 referring to “Propeller Shafts” in Section 4B.

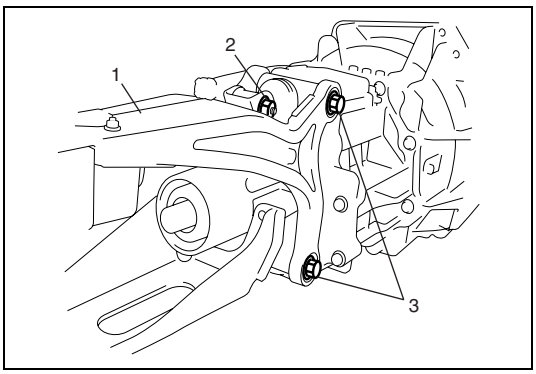

7) Remove gear shift control arm assembly (1).

2. Shift lever No.1 nut
3. Shift lever No.2 bolts

Installation

Reverse removal procedure for installation noting the following.

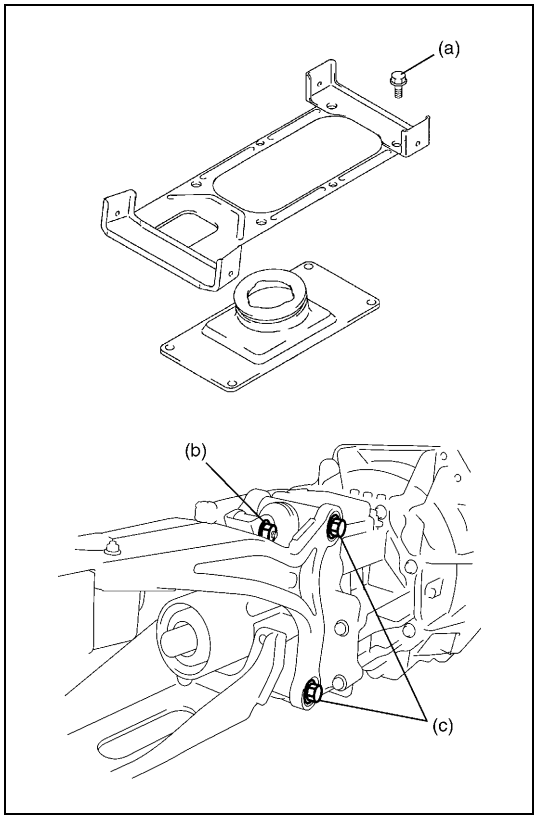

- Tighten bolts and nut to specified torque as follows.

Tightening torque
Gear shift control boot cover bolt
(a): 23 N·m (2.3 kg-m, 17.0 lb-ft)
Shift lever No.1 nut
(b): 23 N·m (2.3 kg-m, 17.0 lb-ft)
Shift lever No.2 bolt
(c): 23 N·m (2.3 kg-m, 17.0 lb-ft)

Gear Shift Control Lever Assembly Disassembly and Reassembly

Disassembly and reassembly component parts referring to “Gear Shift Control Lever Assembly Components” in this section.

Gear Shift Control Lever Assembly Inspection

- Check that gear shift control lever moves smoothly without abnormal noise.
- Check bushes and boot for damage and deterioration.
- If abnormality is found, replace or repair it.

Unit Repair Overhaul

Manual Transmission Unit Components

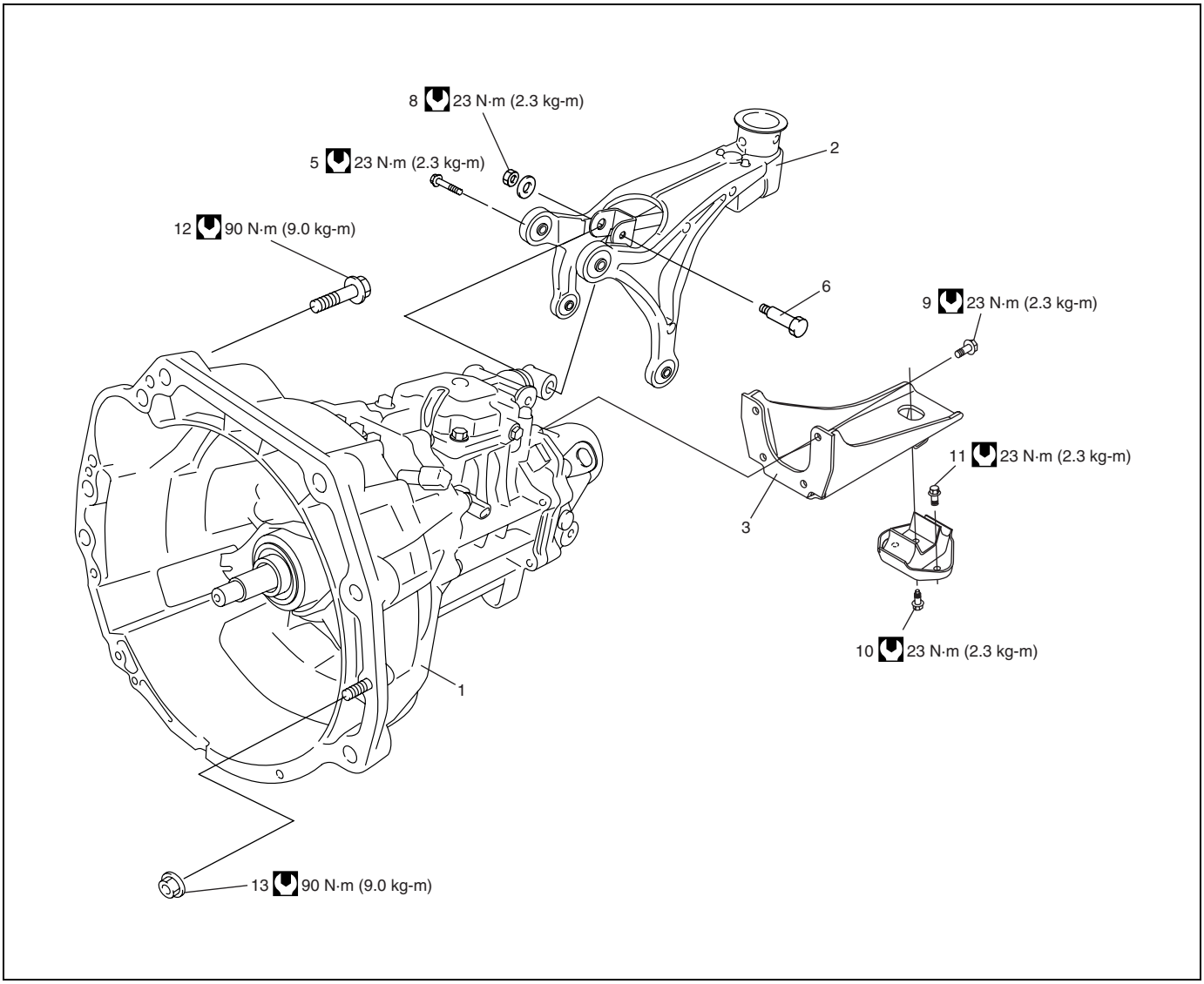

1. Transmission	6. Shift lever No.1 bolt	11. Rear mounting bolt
2. Gear shift control lever assembly	7. Shift lever No.1 washer	12. Transmission case to engine bolt
3. Rear mounting bracket	8. Shift lever No.1 nut	13. Transmission case to engine nut
4. Rear mounting	9. Rear mounting bracket No.1 bolt	Tightening torque
5. Shift lever No.2 bolt	10. Rear mounting bracket No.2 bolt	

Transmission Unit Dismounting and Remounting

Dismounting

1) Disconnect negative cable at battery.
2) Remove gear shift control lever referring to “Gear Shift Control Lever Assembly Removal and Installation” in this section.
3) Remove propeller shaft No.1 and No.2 referring to “Propeller Shafts” in Section 4B.
4) Remove exhaust pipe referring to “Exhaust Pipe” in Section 6K.
5) Remove starting motor from transmission case referring to “Starting Motor” in Section 6G.
6) Disconnect clutch cable from clutch release fork referring to “Clutch Cable” in Section 7C.
7) Remove cable bracket and clutch housing lower plate from transmission case.

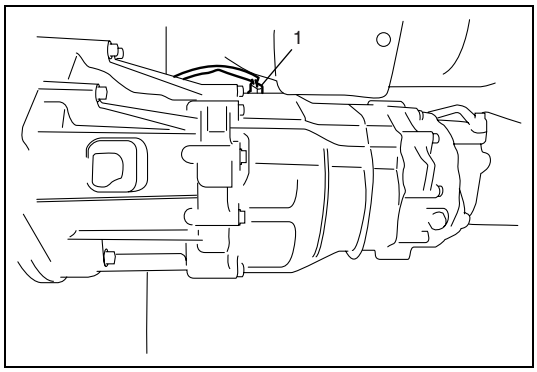

8) Disconnect back up lamp switch coupler (1).
9) Undo wiring harness clamp.

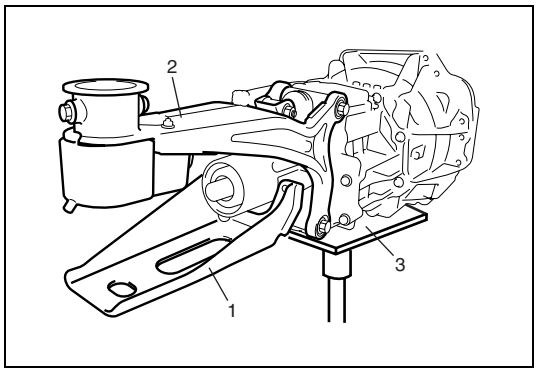

10) Support transmission with transmission jack (3).
11) Remove rear mounting bracket (1).
12) Remove gear shift control arm (2).
13) Remove transmission to engine bolts and nut.
14) Pull transmission out so as to disconnect input shaft from clutch disc, and then lower it.

Remounting

Reverse dismounting procedure for remounting noting the following.

- Connect and adjust clutch cable to clutch release fork referring to “Clutch Cable” in Section 7C.
- Tightening bolts and nuts to specified torque referring to “Manual Transmission Unit Components” in this section.
- Set wiring harness clamps securely.
- Fill transmission with specified oil referring to “Manual Transmission Oil Change” in this section.
- Connect battery and check function of engine, clutch and transmission.

Gear Shift Lever Case Assembly Components

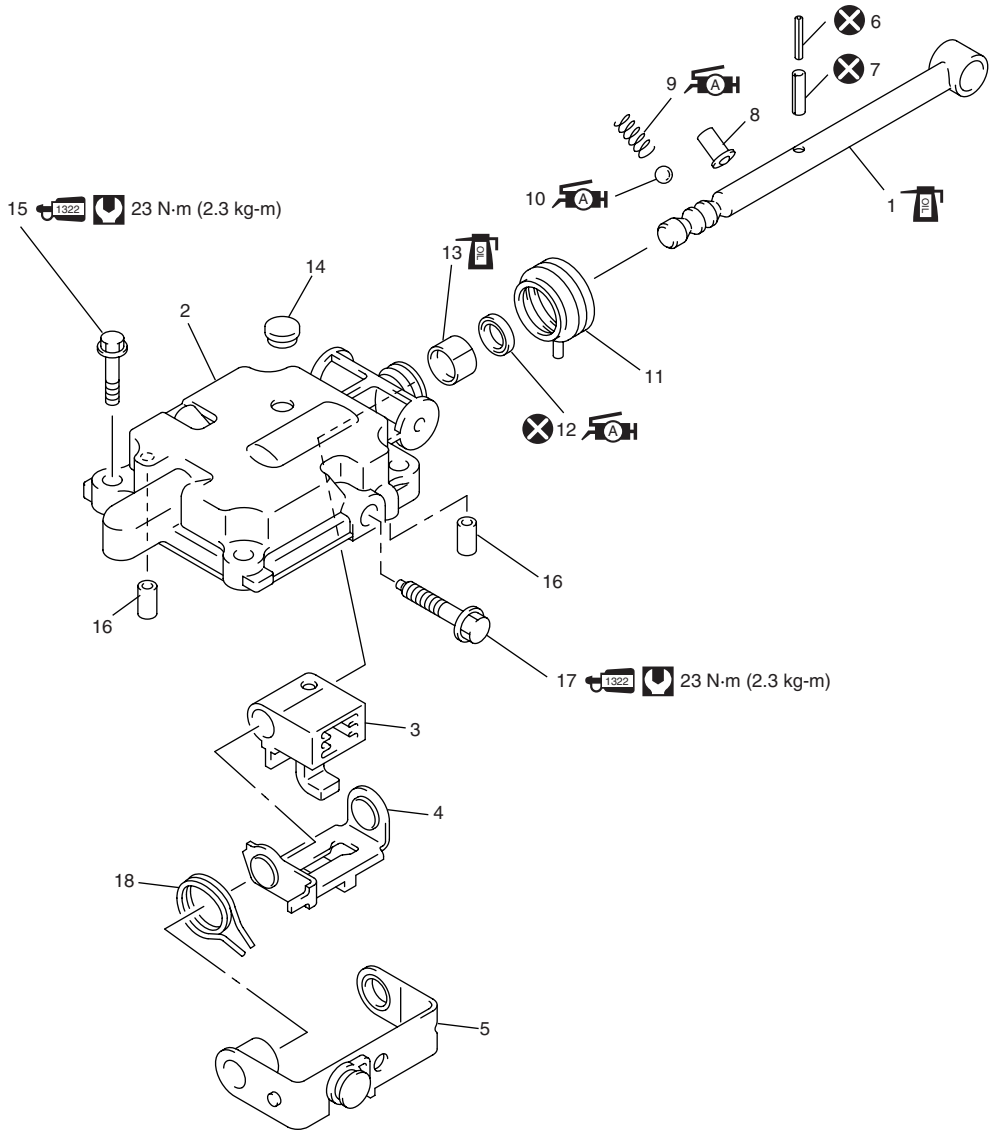

1. Gear shift shaft	8. Gear shift locating retainer	15. Gear shift lever case bolt : Apply thread lock 99000-32110 to bolt thread.
2. Gear shift case	9. Gear shift locating spring : Apply grease 99000-25010 to spring.	16. Knock pin
3. Gear shift & select arm	10. Gear shift locating ball : Apply grease 99000-25010 to ball.	17. Gear shift stop bolt : Apply thread lock 99000-32110 to bolt thread.
4. Gear shift interlock plate	11. Gear shift shaft boot	18. Gear select return spring
5. Reverse gear shift limit plate	12. Gear shift shaft oil seal : Apply grease 99000-25010 to seal lip.	Tightening torque
6. Gear shift arm inner pin	13. Gear shift case bush	Do not reuse.
7. Gear shift arm outer pin	14. Gear shift case plug	Apply transmission oil.

Gear Shift Lever Case Assembly Removal and Installation

Removal

1) Dismount transmission referring to “Transmission Unit Dismounting and Remounting” in this section.

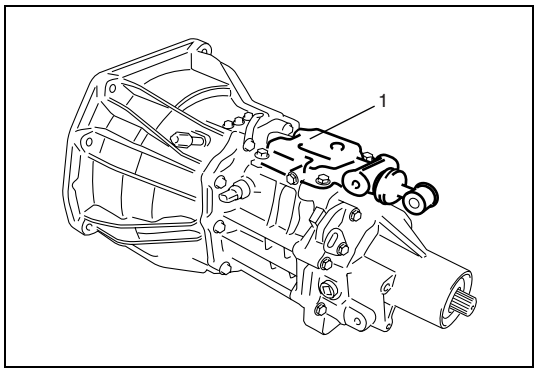

2) Remove gear shift lever case assembly (1) from transmission rear case.

Installation

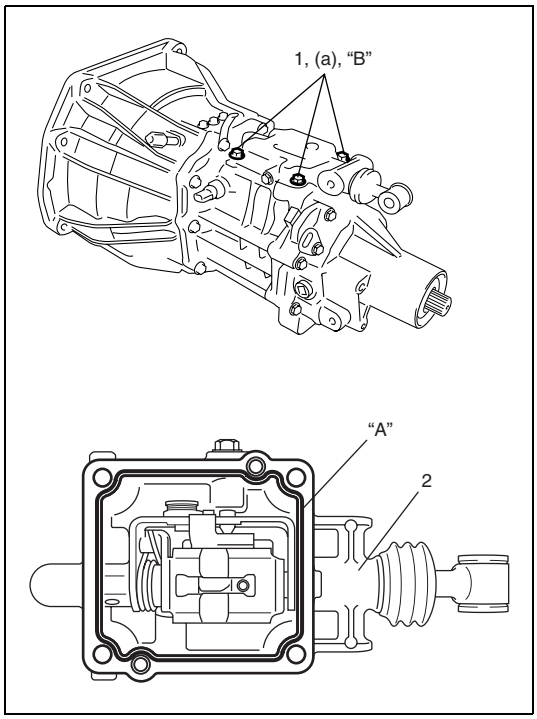

1) Clean mating surface of both rear case and gear shift lever case (2), and uniformly apply sealant to lever case as shown in figure.

“A”: Sealant 99000-31260

2) Install lever case with sealant to rear case and apply thread lock cement to lever case bolts (1), then tighten them to specified torque.

“B”: Thread lock cement 99000-32110

Tightening torque
Gear shift lever case bolt (a): 23 N·m (2.3 kg-m, 17.0 lb-ft)

3) Remount transmission referring to “Transmission Unit Dismounting and Remounting” in this section.

Gear Shift Lever Case Assembly Disassembly and Reassembly

Disassembly

1) Remove gear shift case plug.

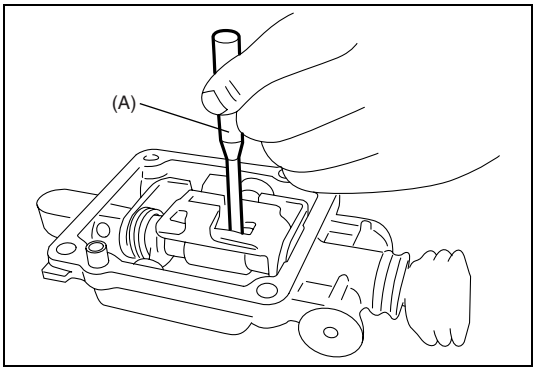

2) Drive out gear shift arm pin using special tool, and then disassemble components parts.

CAUTION:
Be careful to disconnect gear shift shaft from gear shift lever case so that gear shift locating ball and gear shift locating spring may be jumped out.

Special tool
(A): 09925-78210

Reassembly

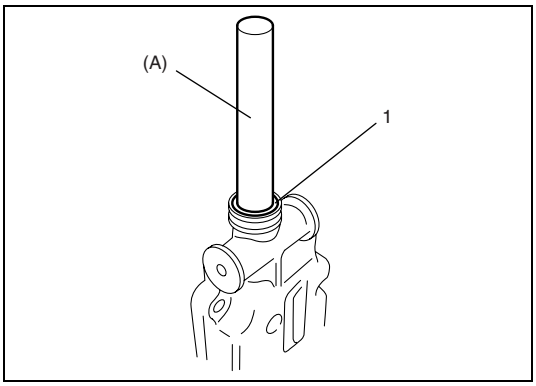

1) Install new gear shift shaft oil seal (1) to gear shift lever case using special tool.

Special tool
(A): 09923-46020

2) Assemble components parts referring to “Gear Shift Lever Case Assembly Components” in this section.

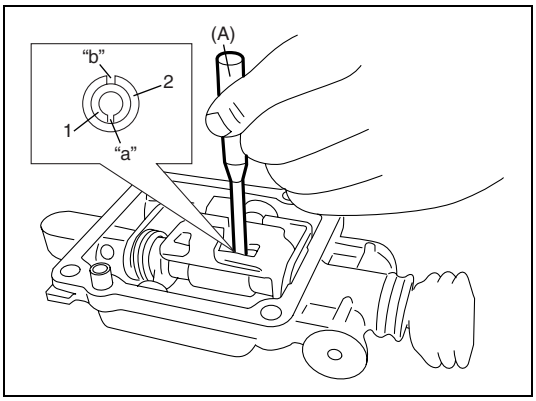

3) Set new gear shift arm inner pin (1) and outer pin (2) facing each gap (“a”, “b”) as shown in figure.
Drive them in using special tool.

Special tool
(A): 09925-78210

Back Up Lamp Switch Removal and Installation

Removal

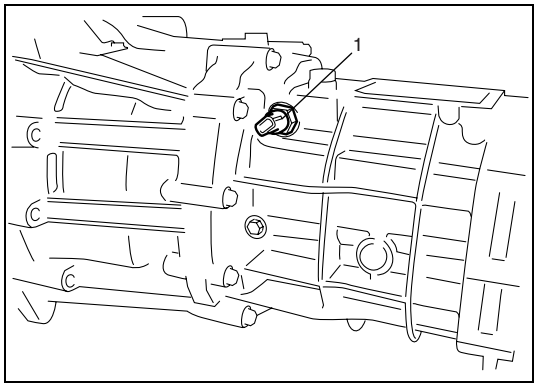

1) Remove back up lamp switch (1).

Installation

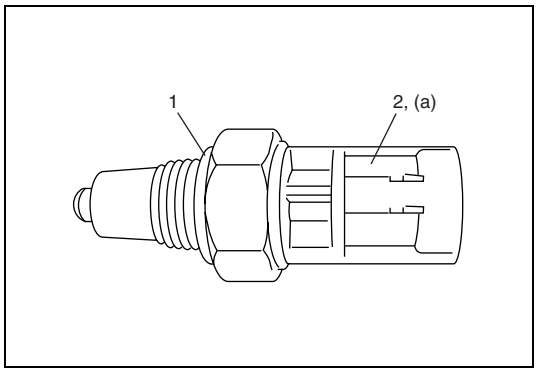

1) Apply oil to new O-ring (1) and tighten back up lamp switch (2) to specified torque.

Tightening torque
Back up lamp switch (a): 23 N·m (2.3 kg-m, 17.0 lb-ft)

Back Up Lamp Switch Inspection

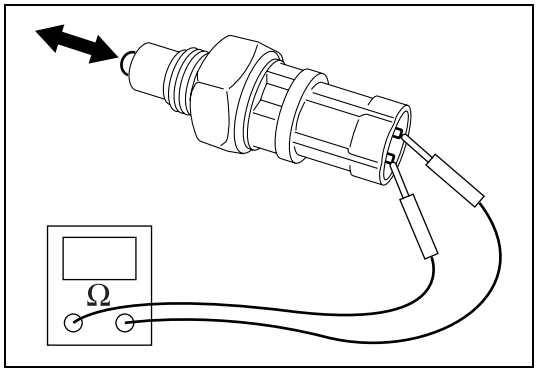

Check back up lamp switch for function using ohmmeter.

Switch ON (Push): Continuity
Switch OFF (Release): No continuity

Manual Transmission Assembly Components

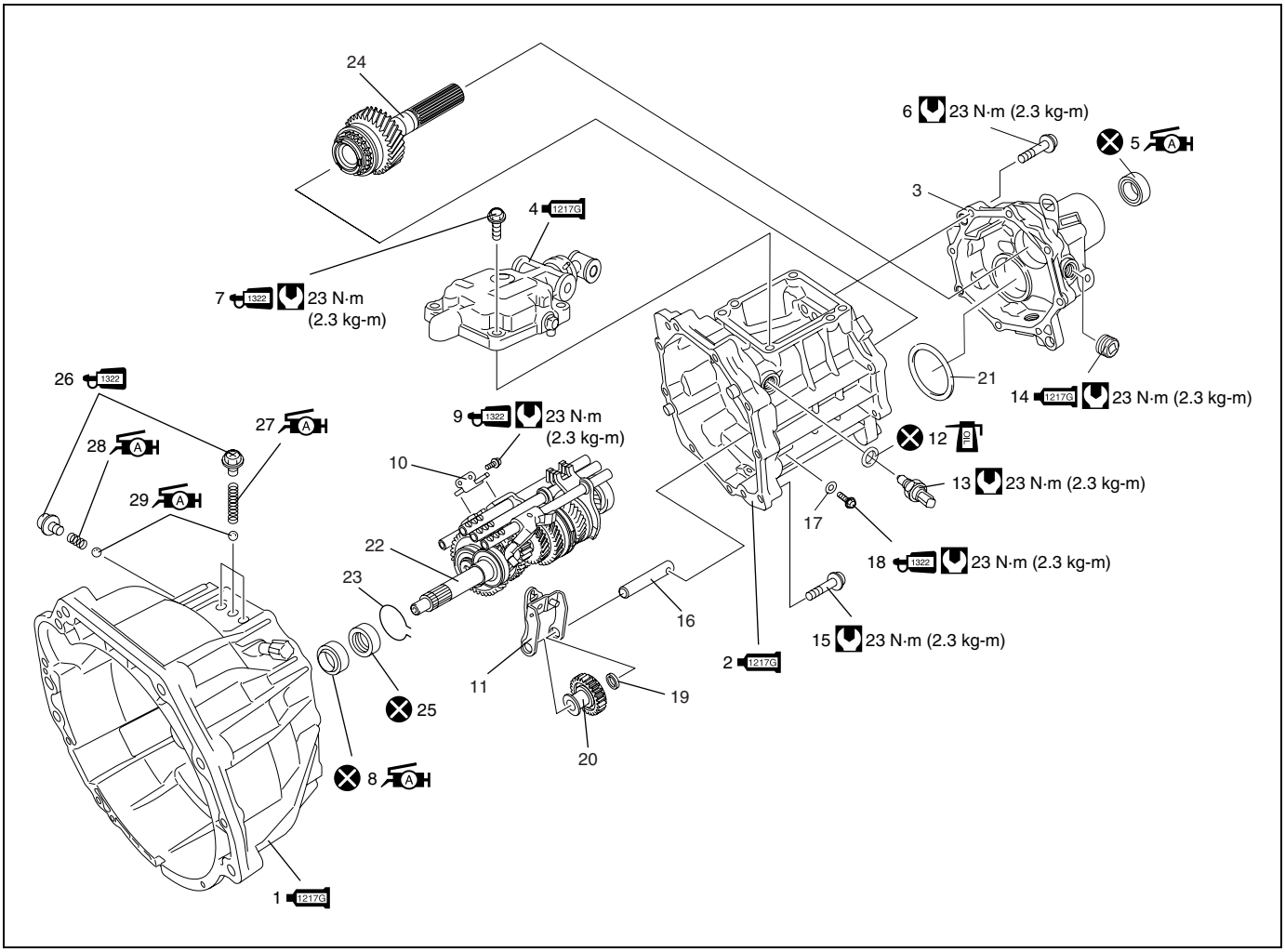

1. Transmission front case : Apply sealant 99000-31260 to mating surface of front case and rear case.	12. O-ring	23. Snap ring
2. Transmission rear case : Apply sealant 99000-31260 to mating surface of rear case and extension case.	13. Back up lamp switch	24. Output shaft assembly
3. Extension case	14. Oil filler plug : Apply sealant 99000-31260 to all around thread part of bolt.	25. Pump seal
4. Gear shift lever case assembly : Apply sealant 99000-31260 to mating surface of rear case and gear shift lever case assembly.	15. Transmission case bolt	26. Gear shift locating bolt
5. Extension oil seal : Apply grease 99000-25010 to oil seal lip.	16. Reverse gear shaft	27. Gear shift locating spring (long)
6. Extension case bolt	17. Reverse shaft bolt washer	28. Gear shift locating spring (short)
7. Gear shift lever case bolt : Apply thread lock 99000-32110 to all around thread part of bolt.	18. Reverse shaft bolt : Apply thread lock 99000-32110 to all around thread part of bolt.	29. Gear shift shaft ball
8. Input shaft oil seal : Apply grease 99000-25010 to oil seal lip.	19. Reverse gear shaft washer	Tightening torque
9. 5th gear shift inverse lever bolt : Apply thread lock 99000-32110 to all around thread part of bolt.	20. Reverse idler gear	Do not reuse.
10. Low gear shift inverse lever	21. Countershaft shim	Apply transmission oil.
11. Reverse gear shift lever	22. Input shaft & countershaft assembly	

Manual Transmission Assembly Disassembly and Reassembly

Disassembly

1) Remove clutch release bearing and release fork referring to "Clutch Cover, Clutch Disc, Flywheel and Release Bearing" in Section 7C.
2) Remove gear shift lever case assembly referring to "Gear Shift Lever Case Assembly Removal and Installation" in this section.
3) Remove extension case.
4) Remove output shaft assembly.

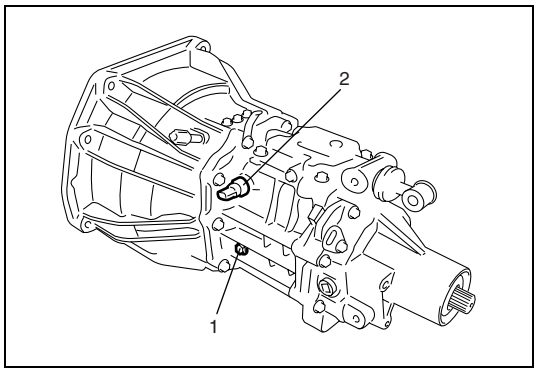

5) Remove reverse shaft bolt (1) and back up lamp switch (2).

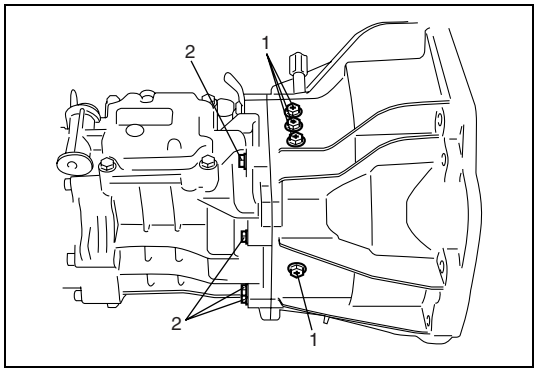

6) Remove gear shift locating bolts (1), then take out locating springs and gear shift shaft balls.
7) Remove rear to front case bolts (2), then separate rear case from front case tapping front case flange with plastic hammer.

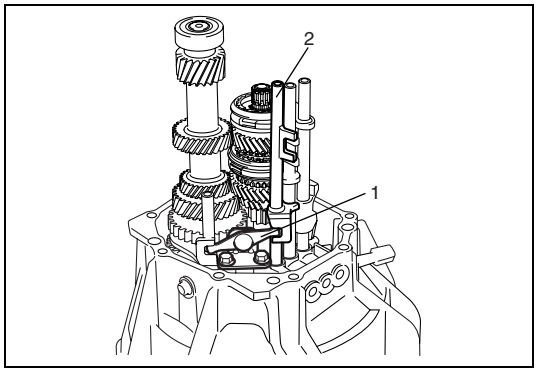

8) Remove reverse shaft assembly.
9) Remove 5th gear shift inverse lever (1).
10) Remove low speed gear shift shaft (2) and input shaft needle bearing.

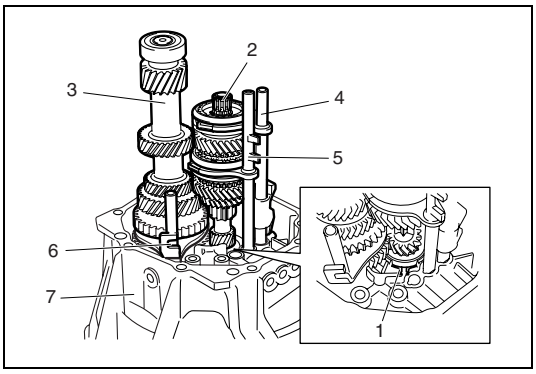

11) Open input shaft front bearing snap ring (1) using snap ring pliers and remove input shaft assembly (2), countershaft assembly (3), high speed gear shift fork (4), 5th & reverse gear shift fork (5) and low speed gear shift fork (6) as assembly from front case (7) tapping input shaft end by plastic hammer lightly.

Reassembly

CAUTION:
Take care not to damage oil seal lip by input shaft, or oil leakage may take place.

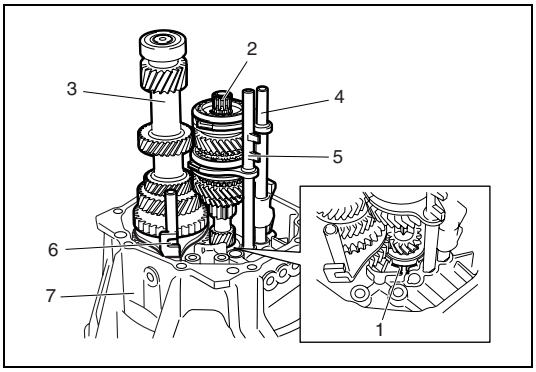

1) Open input shaft front bearing snap ring (1) using snap ring pliers and assemble input shaft assembly (2), countershaft assembly (3), high speed gear shift fork (4), 5th & reverse gear shift fork (5) and low speed gear shift fork (6), then install them all together into front case (7) while installing input shaft front bearing snap ring (1) using special tool.

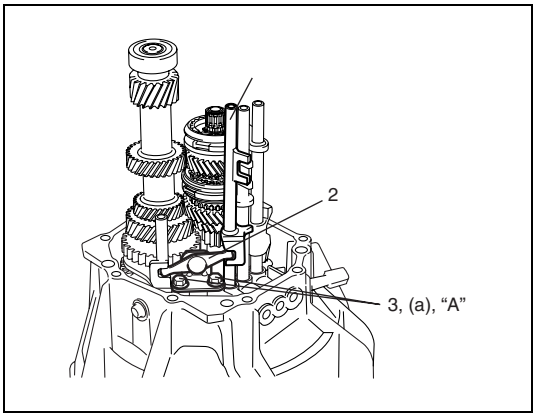

2) Install low speed gear shift shaft (1) and 5th gear shift inverse lever (2) and tighten with bolt (3) to which thread lock cement has been applied.

"A": Thread lock cement 99000-32110

Tightening torque
5th gear shift inverse lever bolt
(a): 23 N·m (2.3 kg-m, 17.0 lb-ft)

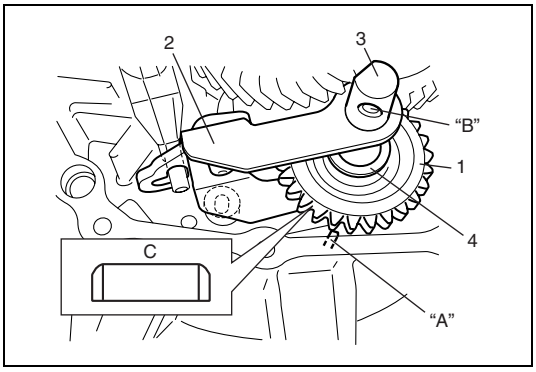

3) Set reverse idler gear (1), reverse gear shift lever (2) and reverse gear shaft washer (4), insert reverse gear shaft (3) into case through idler gear and then align hole "B" in shaft with protrusion "A" in case.

C: Chamfered side

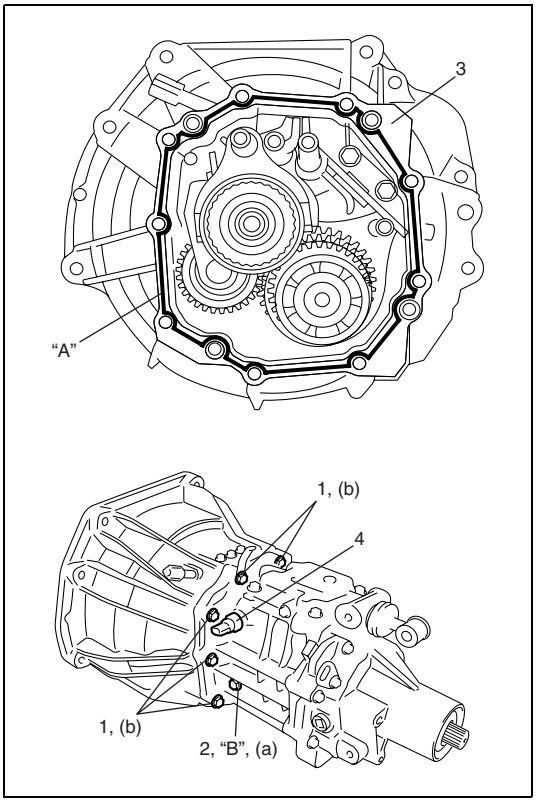

4) Clean mating surfaces of both front and rear cases, and uniformly apply sealant to front case (3) as shown in figure.

"A": Sealant 99000-31260

5) Tighten case bolts (1) to specified torque.

Tightening torque
Transmission case bolt (b): 23 N·m (2.3 kg-m, 17.0 lb-ft)

6) Apply thread lock cement to reverse shaft bolt (2), and tighten it.

"B": Thread lock cement 99000-32110

Tightening torque
Reverse shaft bolt (a): 23 N·m (2.3 kg-m, 17.0 lb-ft)

7) Install back up lamp switch (4) referring to "Back Up Lamp Switch Removal and Installation" in this section.

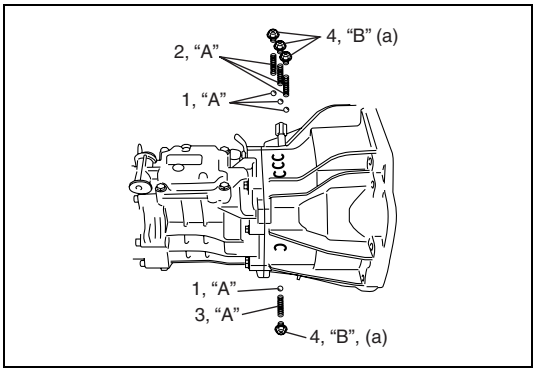

8) Apply grease to gear shift shaft balls (1) and locating springs (long) (2), locating spring (short) (3) then install them.
Apply thread lock cement to gear shift locating bolts (4), and then tighten them.

"A": Grease 99000-25010

"B": Thread lock cement 99000-32110

Tightening torque
Gear shift locating bolt (a): 13 N·m (1.3 kg-m, 9.0 lb-ft)

9) Install output shaft into rear case.

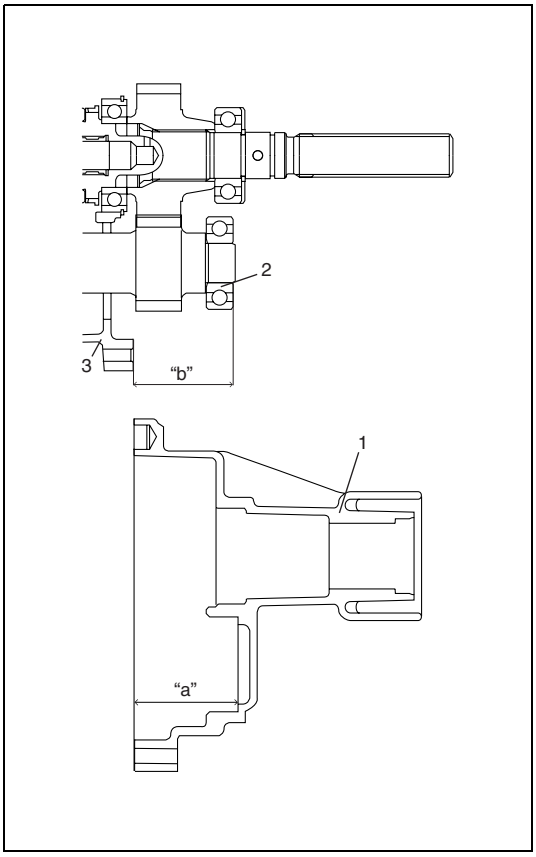

10) Select a countershaft shim as follows.
   a) Measure depth "a" from mating surface of extension case (1) to face processed for installation of countershaft rear bearing (2) using vernier caliper
   b) Measure height "b" from mating surface of rear case (3) to countershaft rear bearing (2) using vernier caliper.
   c) Calculate "a" – "b", and select a shim according to the following table.

Countershaft shim selection table

Clearance "a" – "b"	Thickness of countershaft shim
1.25 – 1.34 mm (0.049 – 0.052 in.)	1.00 mm (0.039 in.)
1.35 – 1.44 mm (0.053 – 0.056 in.)	1.10 mm (0.043 in.)
1.45 – 1.54 mm (0.057 – 0.060 in.)	1.20 mm (0.047 in.)
1.55 – 1.64 mm (0.061 – 0.064 in.)	1.30 mm (0.051 in.)
1.65 – 1.74 mm (0.065 – 0.068 in.)	1.40 mm (0.055 in.)
1.75 – 1.84 mm (0.069 – 0.072 in.)	1.50 mm (0.059 in.)
1.85 – 1.94 mm (0.073 – 0.076 in.)	1.60 mm (0.063 in.)
1.95 – 2.04 mm (0.077 – 0.080 in.)	1.70 mm (0.067 in.)
2.05 – 2.14 mm (0.081 – 0.084 in.)	1.80 mm (0.071 in.)

11) Install selected countershaft shim to extension case.

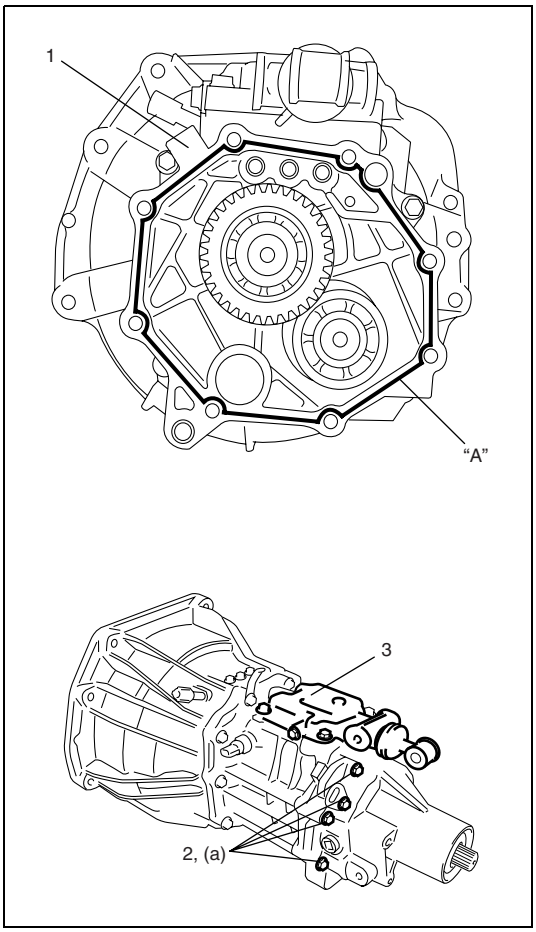

12) Clean mating surface of both rear case (1) and extension case, and uniformly apply sealant to rear case as shown in figure.

"A": Sealant 99000-31260

13) Tighten case bolts (2) to specified torque.

Tightening torque
Extension case bolt (a): 23 N·m (2.3 kg-m, 17.0 lb-ft)

14) Install gear shift lever case assembly (3) referring to "Gear Shift Lever Case Assembly Removal and Installation" in this section.
15) Install clutch release bearing and release fork referring to "Clutch Cover, Clutch Disc, Flywheel and Release Bearing" in Section 7C.

Locating Spring Inspection

Check locating springs for deterioration and replace with new ones if necessary.

Locating spring (long) free length
Standard: 30.9 mm (1.22 in.)
Service limit: 29.1 mm (1.15 in.)

Locating spring (short) free length
Standard: 11.0 mm (0.43 in.)
Service limit: 9.0 mm (0.35 in.)

Front Case Disassembly and Assembly

Disassembly

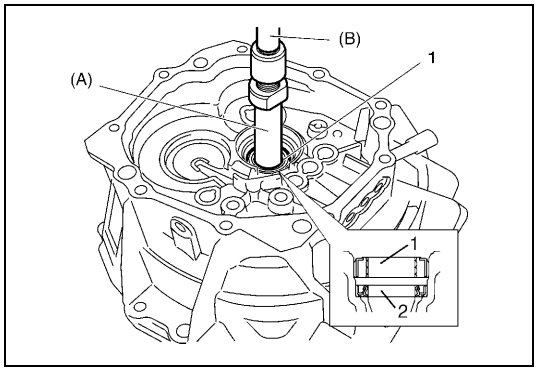

1) Pull out pump seal (1) and then input shaft oil seal (2) using special tools, if necessary.

Special tool
(A): 09941-64511
(B): 09930-30104

Assembly

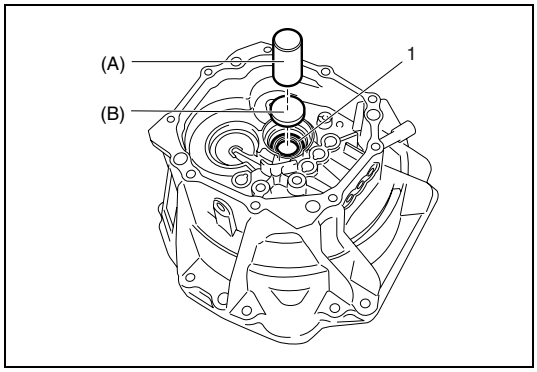

1) Install input shaft oil seal (1) to front case with its spring side facing upward.
use special tool and hammer for installation and apply grease to oil seal lip.

: Grease 99000-25010

Special tool
(A): 09913-84510
(B): 09925-86010

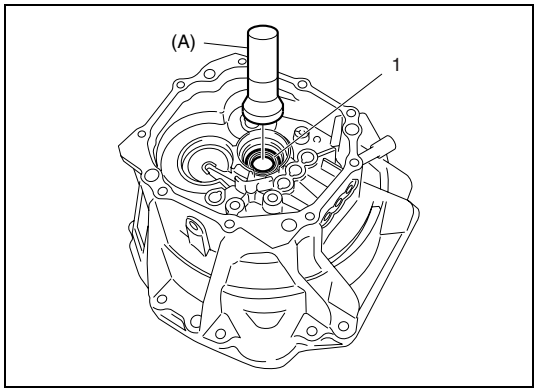

2) Install pump seal (1) to front case using special tool and hammer.

Special tool
(A): 09913-75830

Gear Shift Shaft and Fork Components

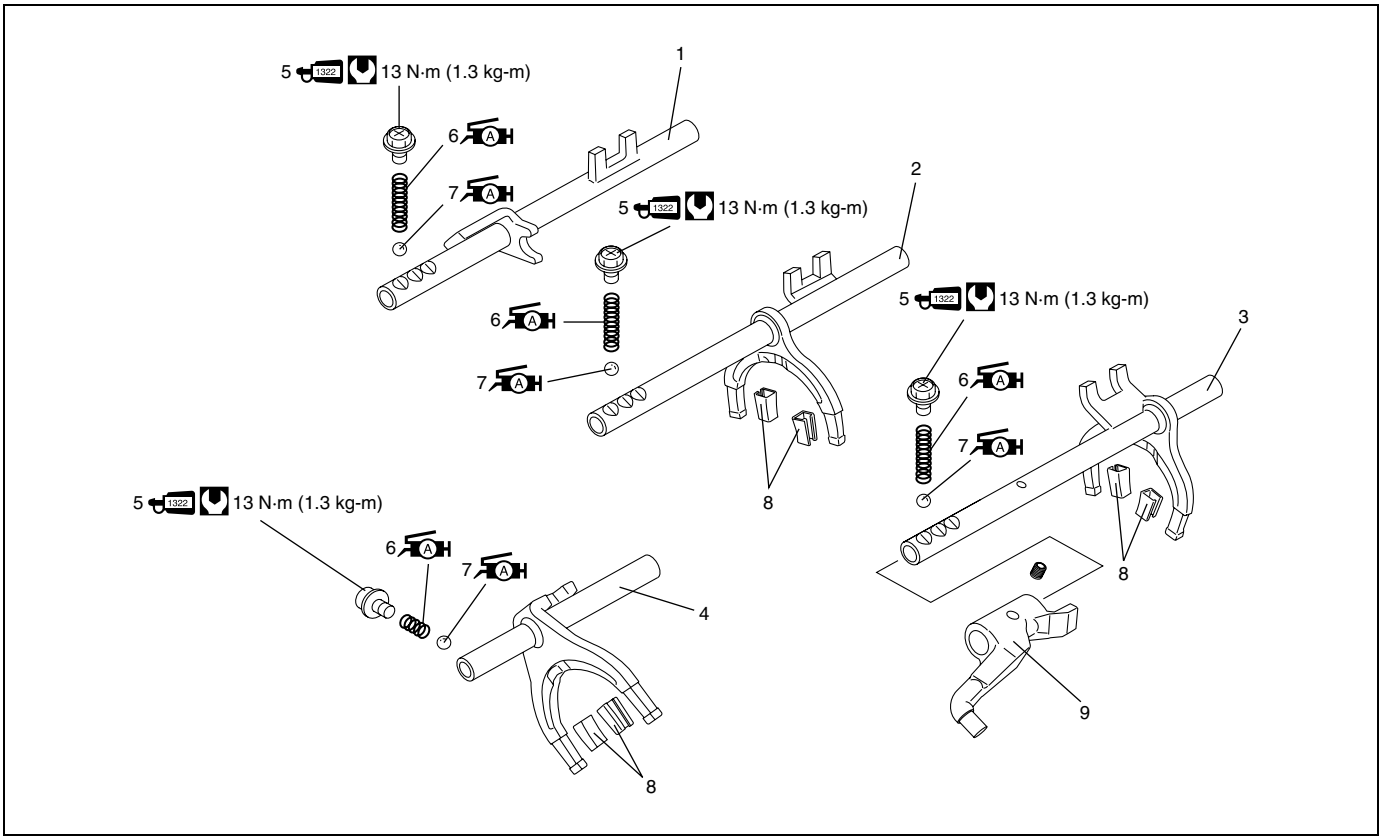

1. Low speed gear shift shaft	1322	5. Gear shift locating bolt : Apply thread lock 99000-32110 to bolt thread.	9. Reverse gear shift arm
2. High speed gear shift shaft & fork	A H	6. Gear shift locating spring (long and short) : Apply grease 99000-25010 to spring.	Tightening torque
3. 5th & reverse gear shift shaft & fork	A H	7. Gear shift shaft ball : Apply grease 99000-25010 to ball.	
4. Low speed gear shift shaft & fork		8. Gear shift shaft bush	

Gear Shift Fork Inspection

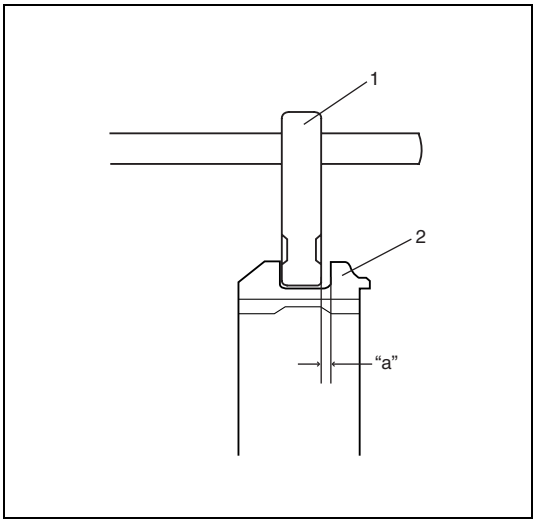

1) Using feeler gauge, check clearance between fork (1) and sleeve (2) and replace those parts if it exceeds limit below.

NOTE:

For correct judgement of parts replacement, carefully inspect contact portion of fork and sleeve.

Clearance between fork and sleeve
Service limit "a": 1.0 mm (0.039 in.)

2) Insert each gear shift shaft into case and check that it moves smoothly. If it doesn't, correct using oilstone, reamer or the like.

Input Shaft, Countershaft and Output Shaft Components

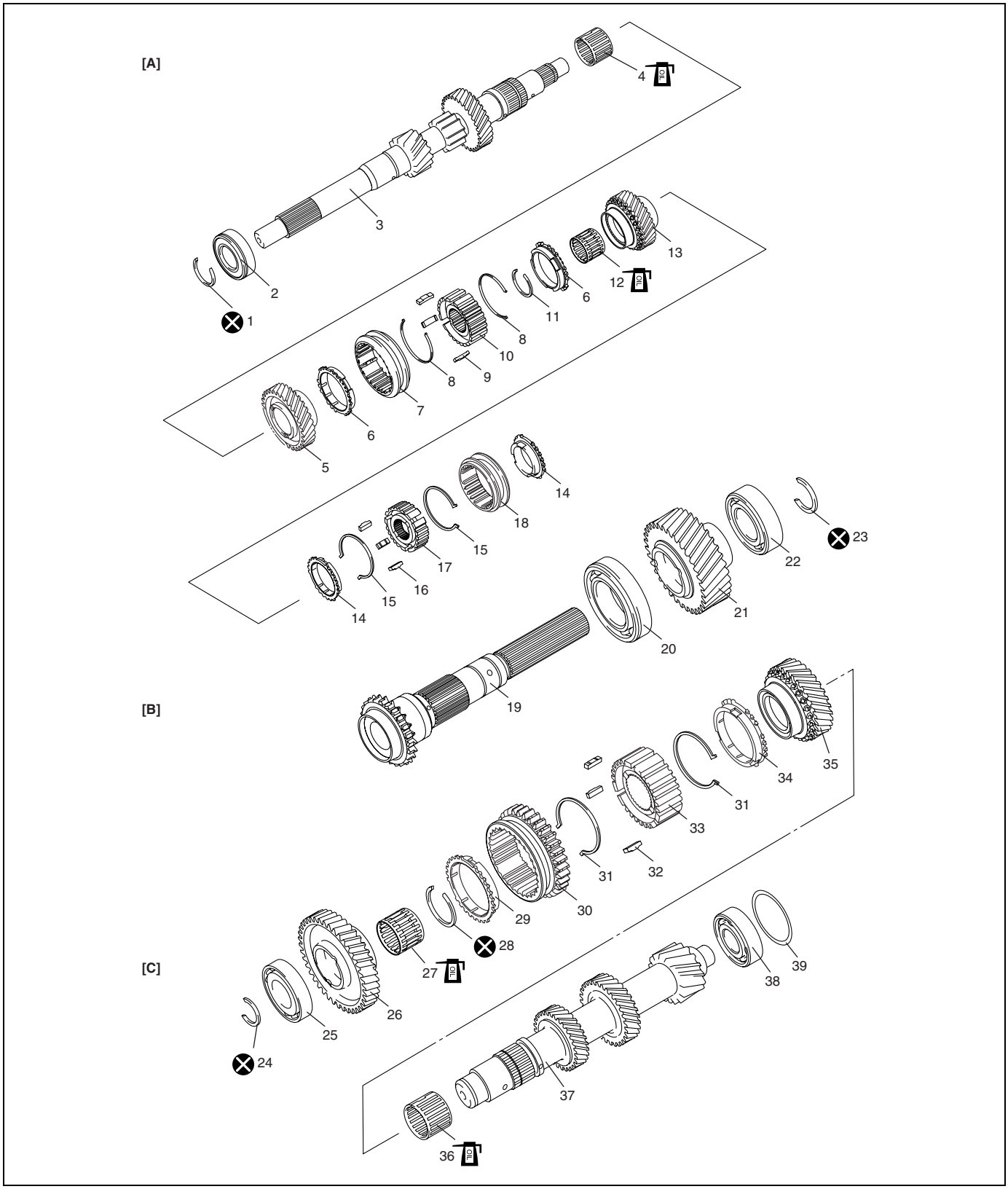

[A]: Input shaft assembly	13. 3rd gear	28. Circlip
[B]: Output shaft assembly	14. 5th speed synchronizer ring	29. 1st gear synchronizer ring
[C]: Countershaft assembly	15. 5th speed synchronizer spring	30. Low speed synchronizer sleeve
1. Snap ring	16. 5th speed synchronizer key	31. Low speed synchronizer spring
2. Input shaft front bearing	17. 5th speed synchronizer hub	32. Low speed synchronizer key
3. Input shaft	18. 5th speed synchronizer sleeve	33. Low speed synchronizer hub
4. 4th gear needle bearing	19. Output shaft	34. 2nd gear synchronizer ring
5. 4th gear	20. Output shaft front bearing	35. 2nd gear
6. High speed synchronizer ring	21. Output shaft gear	36. 2nd gear needle bearing
7. High speed synchronizer sleeve	22. Output shaft rear bearing	37. Countershaft
8. High speed synchronizer spring	23. Output shaft rear snap ring	38. Countershaft rear bearing
9. High speed synchronizer key	24. Countershaft snap ring	39. Countershaft shim
10. High speed synchronizer hub	25. Countershaft front bearing	Do not reuse.
11. Circlip	26. 1st gear	Apply transmission oil.
12. 3rd gear needle bearing	27. Low gear needle bearing	

Input Shaft Assembly Disassembly and Reassembly

Disassembly

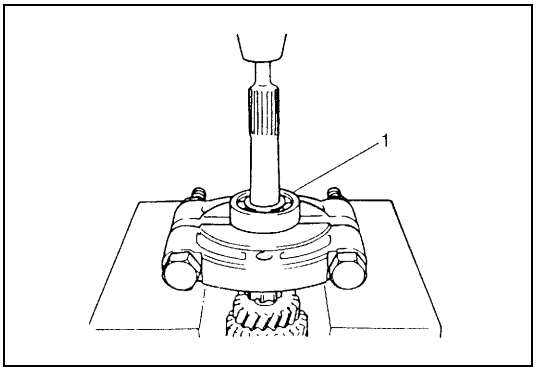

1) Remove snap ring.
2) Remove input shaft front bearing (1) using bearing puller and press.
3) Remove input shaft needle bearing.

CAUTION:
To avoid gear teeth from being damaged, support gear with flat side of bearing puller when removing gear using bearing puller.

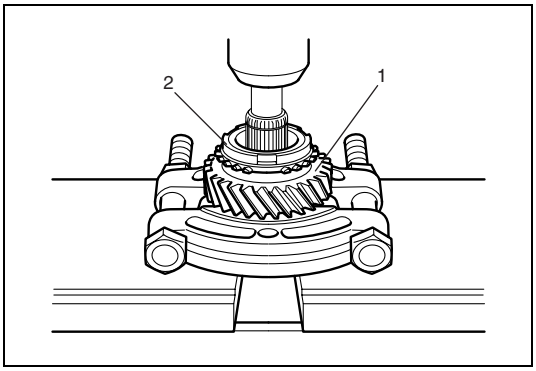

4) Remove circlip and then drive out 5th speed synchronizer assembly (2) with 3rd gear (1) from input shaft using bearing puller and press.
5) Remove 3rd gear needle bearing and high speed synchronizer ring.

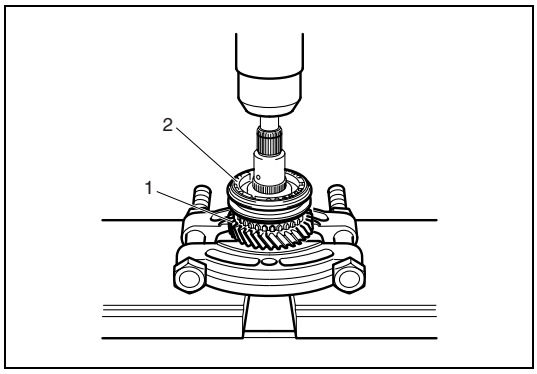

6) Remove circlip and then drive out high speed synchronizer assembly (2) and 4th gear (1) from input shaft using bearing puller and press.
7) Remove 4th gear needle bearing.

Reassembly

1) Clean all components thoroughly, inspect them for any abnormality and replace with new ones as necessary.

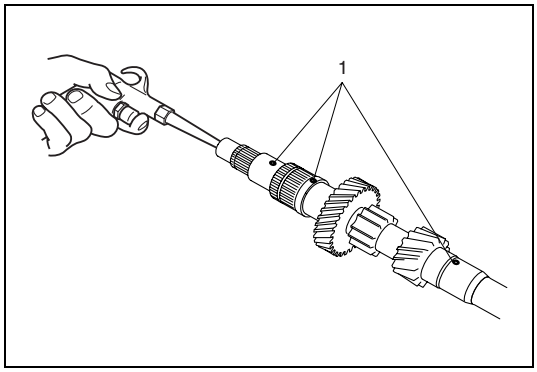

2) To ensure lubrication, air blow oil holes (1) and make sure that they are free from any obstruction.

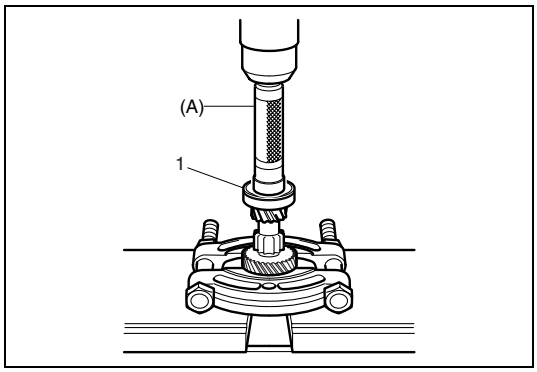

3) Drive in input shaft front bearing (1) to input shaft using special tool and press and then install snap ring.

Special tool
(A): 09941-74910

4) Apply oil to 4th gear needle bearing, and then install needle bearing and 4th gear to input shaft.

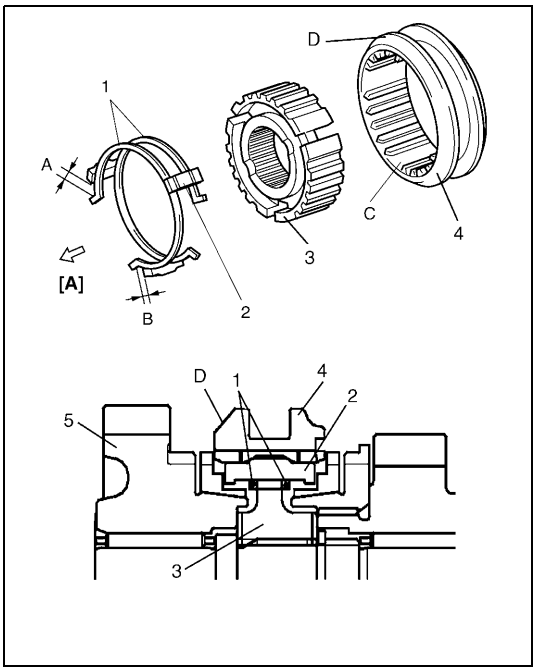

5) Assemble high speed synchronizer sleeve (4) and hub (3) as follows.
   a) Fit high speed synchronizer sleeve to hub in specified direction as shown in figure.
   b) Insert 3 keys (2) to hub.
   c) Set springs (1) at specified position as shown in figure.

Synchronizer key installation position
: A = B

[A]:	4th gear side
C:	Key way
D:	Chamfered side
5.	4th gear

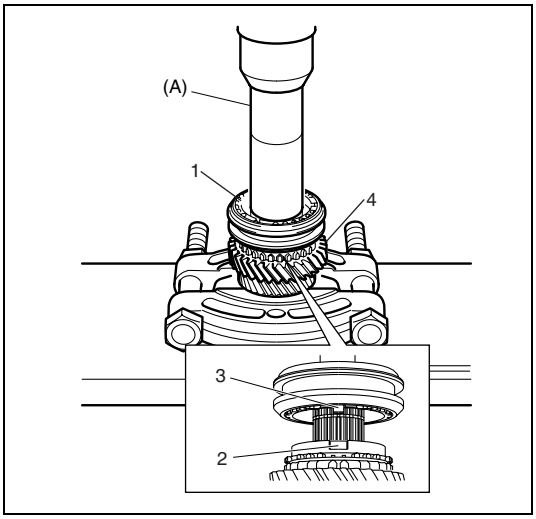

6) Drive in high speed synchronizer assembly (1) using special tool and press and then install circlip.

NOTE:

- **While press-fitting sleeve &hub, make sure that synchronizer ring key slots (2) are aligned with keys (3) in sleeve & hub assembly.**
- **Check free rotation of 4th gear (4) after press fitting sleeve & hub assembly.**

Special tool
(A): 09913-84510

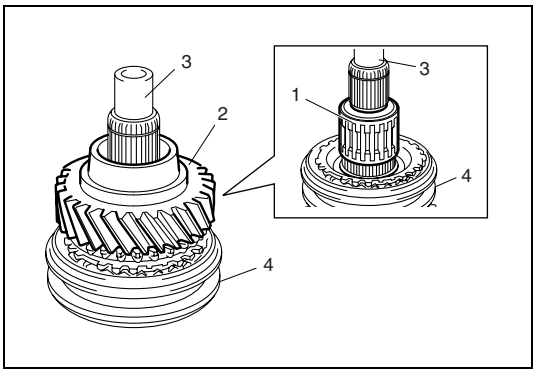

7) Apply oil to 3rd gear needle bearing, and then install 3rd gear needle bearing (1), high speed synchronizer ring and 3rd gear (2) to input shaft (3).

4.	High speed synchronizer assembly

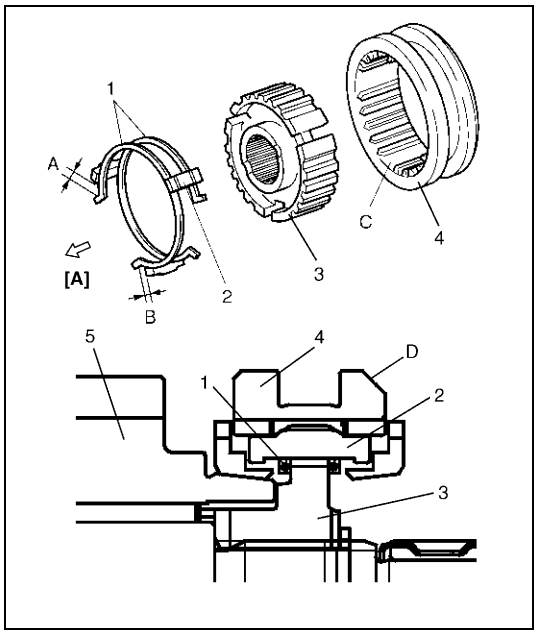

8) Assemble 5th speed synchronizer sleeve (4) and hub (3) as follows.
   a) Fit 5th speed synchronizer sleeve to hub in specified direction as shown in figure.
   b) Insert 3 keys (2) to hub.
   c) Set springs (1) at specified position as shown in figure.

Synchronizer key installation position
: A = B

[A]:	4th gear side
C:	Key way
D:	Chamfered side
5.	4th gear

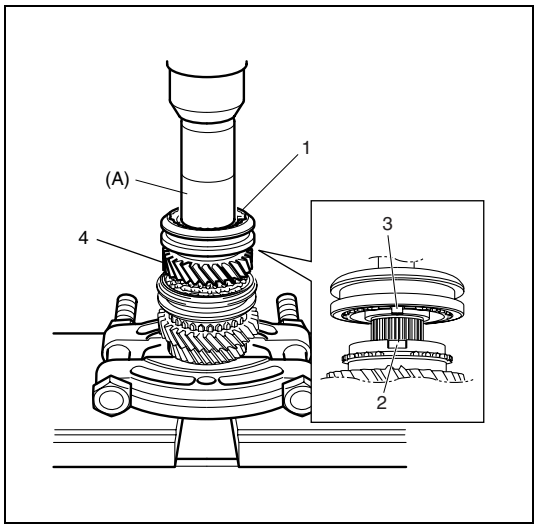

9) Press-fit 5th speed synchronizer assembly (1) using special tool and press.

NOTE:

- **While press-fitting sleeve & hub, make sure that synchronizer ring key slots (2) are aligned with keys (3) in sleeve & hub assembly.**
- **Check free rotation of 3rd gear (4) after press fitting sleeve & hub assembly.**

Special tool
(A): 09913-84510

10) Install input shaft needle bearing and circlip.

Input Shaft Assembly Inspection

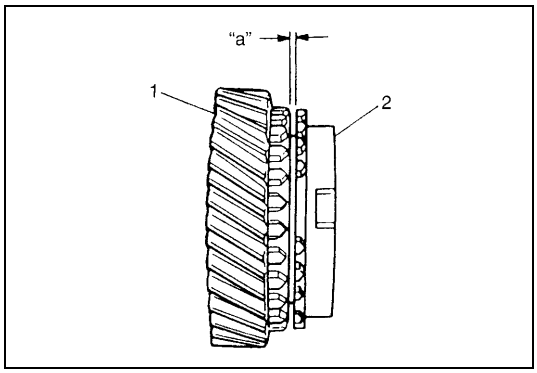

Check clearance "a" between ring (2) and gear (1), each chamfered teeth of gear, ring and sleeve, then determine parts replacement.

Clearance between synchronizer ring and gear
Standard "a": 1.0 – 1.4 mm (0.039 – 0.055 in.)
Service limit "a": 0.5 mm (0.019 in.)

Countershaft Assembly Disassembly and Reassembly

Disassembly

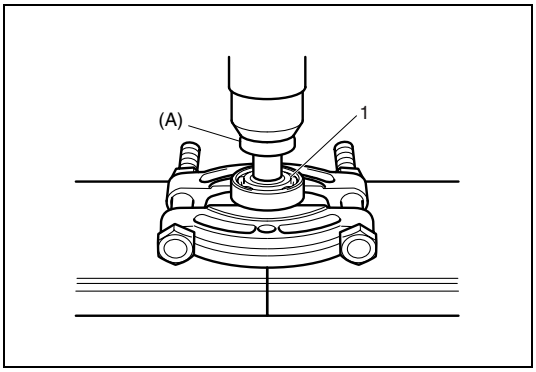

1) Remove countershaft rear bearing (1) using bearing puller, special tool and press.

Special tool
(A): 09913-85230

CAUTION:
To avoid gear teeth from being damaged, support gear with flat side of bearing puller when removing gear using bearing puller.

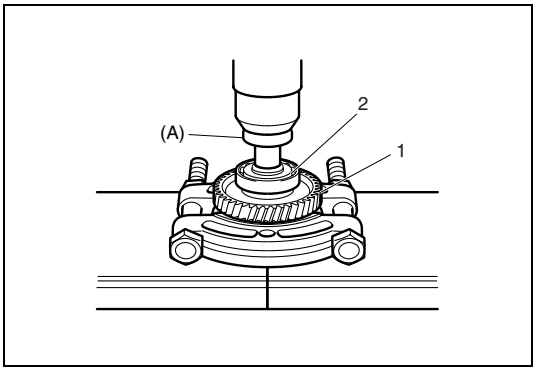

2) Remove countershaft snap ring and then drive out countershaft front bearing (2), low gear needle bearing, and 1st gear (1) from countershaft using bearing puller, special tool and press.

Special tool
(A): 09913-85230

3) Remove 1st gear synchronizer ring.

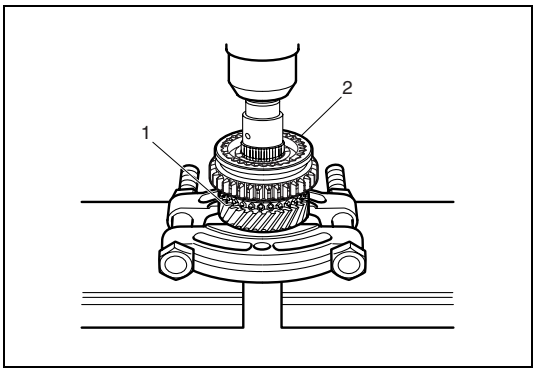

4) Remove circlip and then drive out low speed synchronizer assembly (2), 2nd gear needle bearing and 2nd gear (1) from countershaft using bearing puller and press.

Reassembly

1) Clean all components thoroughly, inspect them for any abnormality and replace with new ones as necessary.

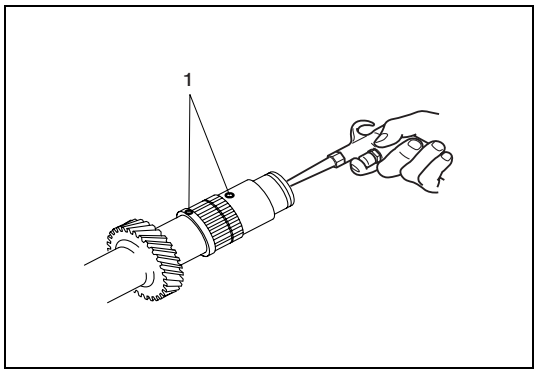

2) To ensure lubrication, air blow oil holes (1) and make sure that they are free from any obstruction.

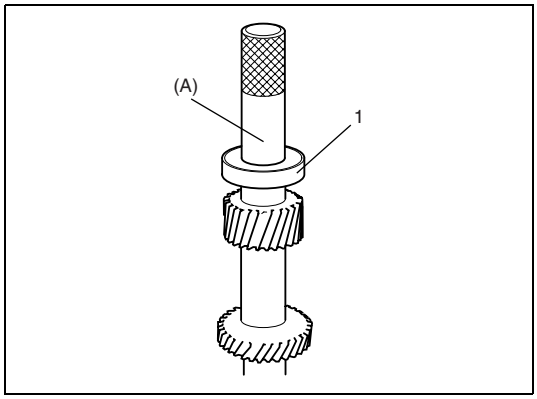

3) Drive in countershaft rear bearing (1) using special tool and press.

Special tool
(A): 09925-98221

4) Apply oil to 2nd gear needle bearing, and then install 2nd gear needle bearing and 2nd gear.

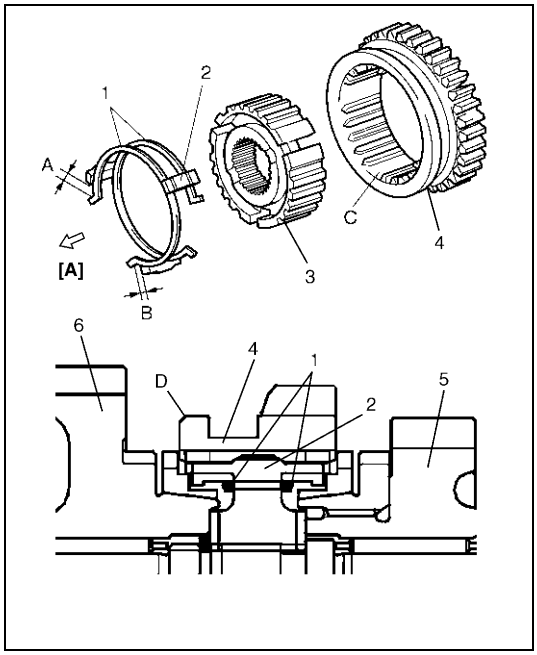

5) Assemble low speed synchronizer sleeve (4) and hub (3) as follows.
   a) Fit low speed synchronizer sleeve to hub in specified direction as shown in figure.
   b) Insert 3 keys (2) to hub.
   c) Set springs (1) at specified position as shown in figure.

Synchronizer key installation position
: A = B

[A]:	1st gear side
C:	Key way
D:	Chamfered side
5.	2nd gear
6.	1st gear

6) Install 2nd gear synchronizer ring.

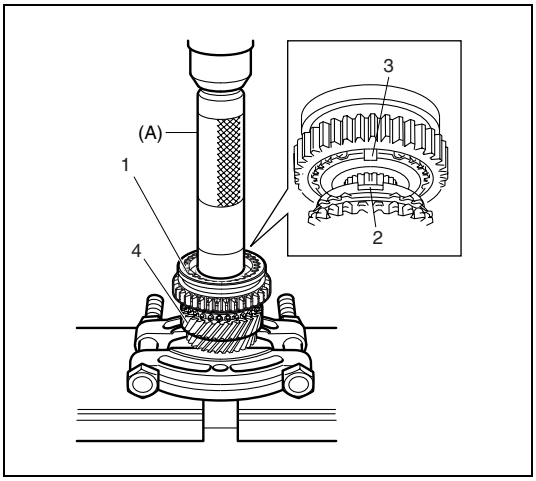

7) Drive in low speed synchronizer assembly (1) using special tool and press, and then Install circlip.

NOTE:

- **While press-fitting sleeve & hub, make sure that synchronizer ring key slots (2) are aligned with keys (3) in sleeve & hub assembly.**
- **Check free rotation of 2nd gear (4) after press-fitting sleeve & hub assembly.**

Special tool
(A): 09940-51710

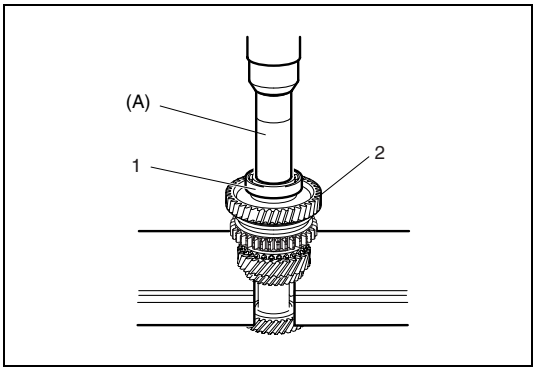

8) Install low gear needle bearing, 1st gear synchronizer ring and 1st gear (2) to countershaft.
9) Press-fit countershaft front bearing (1) using special tool and press and then install circlip.

Special tool
(A): 09913-84510

Countershaft Assembly Inspection

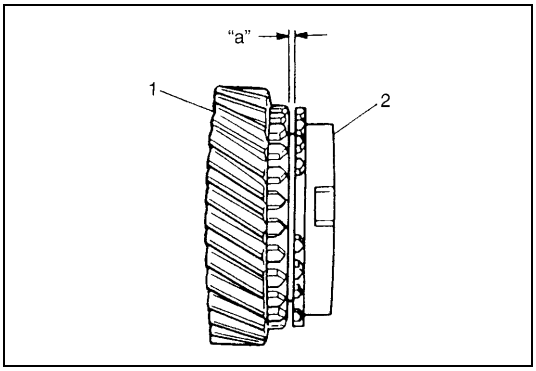

Check clearance "a" between ring (2) and gear (1), each chamfered teeth of gear, ring and sleeve, then determine parts replacement.

Clearance between synchronizer ring and gear
Standard "a": 1.0 – 1.4 mm (0.039 – 0.055 in.)
Service limit "a": 0.5 mm (0.019 in.)

Output Shaft Assembly Disassembly and Reassembly

Disassembly

1) Remove output shaft rear snap ring.

CAUTION:
To avoid gear teeth from being damaged, support gear with flat side of bearing puller when removing gear using bearing puller.

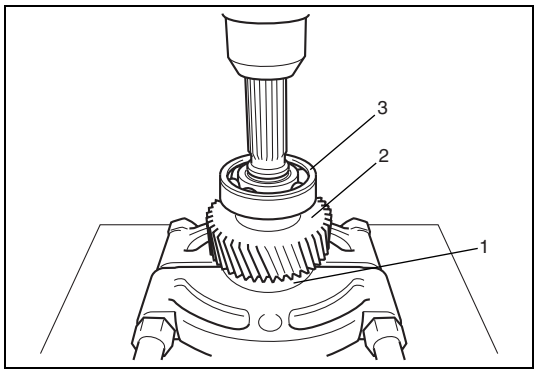

2) Apply bearing puller to output shaft front bearing (1), and drive out output shaft front bearing, output shaft gear (2) and output shaft rear bearing (3) all at once from output shaft using press.

Reassembly

1) Clean all components thoroughly, inspect them for any abnormality and replace with new ones as necessary.

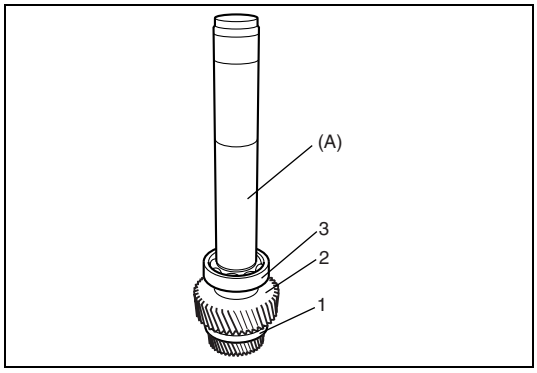

2) Drive in output shaft front bearing (1), output shaft gear (2) and output shaft rear bearing (3) using special tool and press.

Special tool
(A): 09941-74910

3) Install output shaft rear snap ring.

Tightening Torque Specification

Fastening part	Tightening torque		
	N•m	kg-m	lb-ft
Transmission oil level / filler	23	2.3	17.0
Transmission oil drain plug	23	2.3	17.0
Gear shift control boot cover bolt	23	2.3	17.0
Shift lever No.1 nut	23	2.3	17.0
Shift lever No.2 bolt	23	2.3	17.0
Back up lamp switch	23	2.3	17.0
Reverse shaft bolt	23	2.3	17.0
Gear shift locating bolt	13	1.3	9.0
Extension case bolt	23	2.3	17.0
Gear shift lever case bolt	23	2.3	17.0
5th gear shift inverse lever bolt	23	2.3	17.0
Transmission case to engine bolt	90	9.0	65.0
Transmission case to engine nut	90	9.0	65.0
Gear shift control joint nut	3.5	0.35	2.5
Gear shift control boot plate nut	3.5	0.35	2.5
Gear shift stop bolt	23	2.3	17.0
Rear mounting bracket No.1 bolt	23	2.3	17.0
Rear mounting bracket No.2 bolt	23	2.3	17.0
Rear mounting bolt	23	2.3	17.0
Transmission case bolt	23	2.3	17.0

Required Service Material

Material	Recommended SUZUKI product (Part Number)	Use
Lithium grease	SUZUKI SUPER GREASE A (99000-25010)	• Oil seal lips • Locating springs • Gear shift shaft balls • Gear shift control joint • Gear shift control arm • Gear shift control shaft bush • Gear shift control joint washer • Gear shift control shaft
Sealant	SUZUKI BOND NO.1217G (99000-31260)	• Oil drain plug and filler / level plug • Mating surface of transmission front case • Mating surface of transmission rear case • Mating surface of gear shift lever case
Thread lock cement	THREAD LOCK 1322 (99000-32110)	• Reverse shaft bolt • 5th gear shift inverse lever bolt • Locating bolt • Gear shift stop bolt • Gear shift lever case bolt

Special Tool

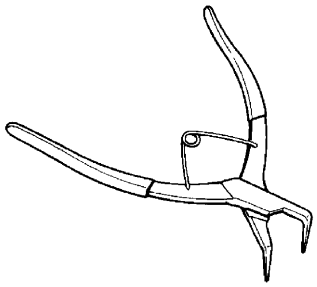 09900-06106 Snap ring remover	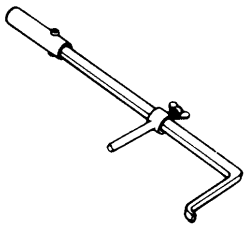 09913-50121-000 Oil seal remover	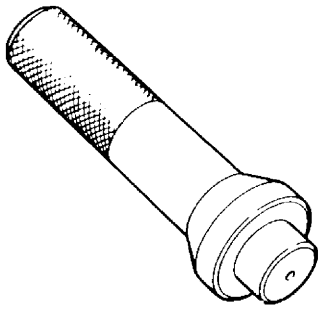 09913-75830-000 Steering piston bush installer	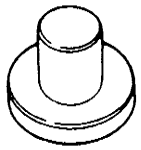 09913-85230-000 Bearing remover tool
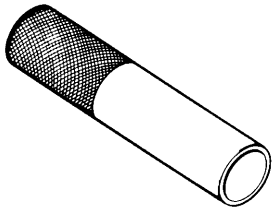 09913-84510 Bearing installer	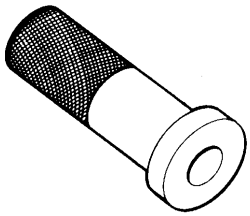 09913-85210-000 Bearing pulling holder	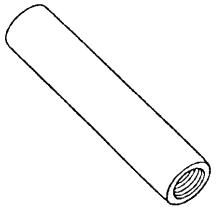 09923-46020 Joint pipe	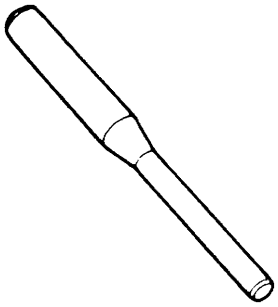 09925-78210 Spring pin remover 6 mm (0.24 in.)
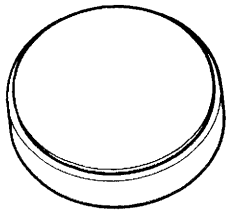 09925-86010-000 Attachment, bearing puller	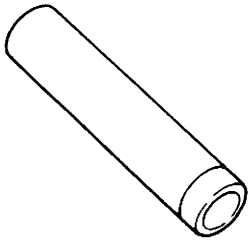 09925-98221-000 Installer, bearing	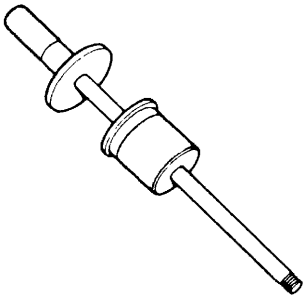 09930-30104 Sliding shaft	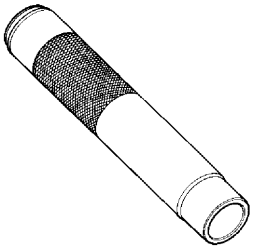 09940-51710-000 Bearing installer
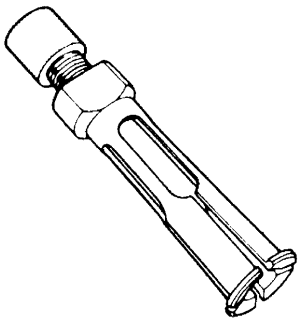 09941-64511 Bearing remover	 09941-74910-000 Steering stem bearing remover		

SECTION 7B

AUTOMATIC TRANSMISSION

WARNING:

For vehicles equipped with a Supplemental Restraint (Air Bag) System:

- **Service on and around the air bag system components or wiring must be performed only by an authorized SUZUKI dealer. Refer to "System Components and Wiring Location View" under "General Description" in Section 10B in order to confirm whether you are performing service on or near the air bag system components or wiring. Please observe all WARNINGS and "Service Precautions" under "On-Vehicle Service" in Section 10B before performing service on or around the air bag system components or wiring. Failure to follow WARNINGS could result in unintentional activation of the system or could render the system inoperative. Either of these two conditions may result in severe injury.**
- **Technical service work must be started at least 90 seconds after the ignition switch is turned to the "LOCK" position and the negative cable is disconnected from the battery. Otherwise, the system may be activated by reserve energy in the Sensing and Diagnostic Module (SDM).**

CONTENTS

General Description 7B-4
- Specifications 7B-6
- Clutch / Brake / Planetary Gear 7B-7
- Table of Component Operation 7B-8
- Electronic Shift Control System 7B-9
- CAN Communication System (M13 Engine Model with VVT) 7B-11
  - TCM transmission data to ECM 7B-11
  - TCM reception data from ECM 7B-11
- Transmission Control Module (TCM) 7B-12
  - M13 engine model with VVT 7B-12
  - M13 engine model without VVT 7B-13
  - Operation of shift solenoid valves, timing solenoid valve and TCC solenoid valve 7B-14
  - Automatic gear shift table 7B-15

Diagnosis 7B-16
- General Description 7B-16
- On-Board Diagnostic System 7B-17
  - 2 driving cycle detection logic 7B-17
  - Pending DTC 7B-17
  - Freeze frame data 7B-17
- Precaution in Diagnosing Trouble 7B-19
- Automatic Transmission Diagnostic Flow Table 7B-20
- DTC Table 7B-24
- DTC Check 7B-27
  - Reading DTC using SUZUKI scan tool 7B-27
  - Reading DTC using transmission warning light 7B-28
- DTC Clearance 7B-29
  - DTC clearance using SUZUKI scan tool 7B-29
  - DTC clearance using monitor connector 7B-30
- Fail Safe Table 7B-31
- Visual Inspection 7B-35
- Automatic Transmission Basic Check 7B-36
- Trouble Diagnosis Table 7B-37
  - Trouble diagnosis table-1 ..... 7B-37
  - Trouble diagnosis table-2 ..... 7B-41
  - Trouble diagnosis table-3 ..... 7B-43
- Road Test 7B-44
- Manual Road Test 7B-47
- Engine Brake Test 7B-48
- Stall Test 7B-49
- Time Lag Test 7B-50
- Line Pressure Test 7B-51
- "P" Range Test 7B-52
- Diagnostic Flow Table A-1: No Gear Shift to 4th Gear 7B-53
- Diagnostic Flow Table A-2: No Lock-Up Occurs 7B-54
- Diagnostic Flow Table A-3: Transmission Warning Light Circuit Check – Light Does Not Come "ON" at Ignition Switch ON (M13 Engine Model without VVT) 7B-55
- Diagnostic Flow Table A-4: Transmission Warning Light Circuit Check – Light Remains "ON" at Ignition Switch ON (M13 Engine Model without VVT) 7B-57
- Diagnostic Flow Table A-5: TCM Power and Ground Circuit Check 7B-58

DTC P0705 (No.34) Transmission Range Sensor Circuit Malfunction 7B-60
DTC P0707 (No.34) Transmission Range Sensor Circuit Low 7B-63
DTC P0712 (No.38) Transmission Fluid Temperature Sensor Circuit Low 7B-66
DTC P0713 (No.36) Transmission Fluid Temperature Sensor Circuit High 7B-68
DTC P0717 (No.14) Input / Turbine Speed Sensor Circuit Malfunction 7B-70
DTC P0722 (No.31) Output Speed Sensor Circuit No Signal 7B-72
DTC P0727 (No.35) Engine Speed Input Circuit No Signal (M13 Engine Model without VVT) 7B-74
DTC P0741 (No.78) / P0742 (No.77) TCC Circuit Performance or Stuck OFF / TCC Circuit Stuck ON (M13 Engine Model with VVT) 7B-76
DTC P0751 (No.62) / P0752 (No.61) / P0756 (No.65) / P0757 (No.63) Shift Solenoid-A (No.1) Performance or Stuck OFF / Shift Solenoid-A (No.1) Stuck ON / Shift Solenoid-B (No.2) Performance or Stuck OFF / Shift Solenoid-B (No.2) Stuck ON (M13 Engine Model with VVT) 7B-77
DTC P0787 (No.13) Shift / Timing Solenoid Control Circuit Low 7B-79
DTC P0788 (No.13) Shift / Timing Solenoid Control Circuit High 7B-81
DTC P0962 (No.41) Pressure Control Solenoid Control Circuit Low 7B-83
DTC P0963 (No.42) Pressure Control Solenoid Control Circuit High 7B-86
DTC P0973 (No.22) / P0976 (No.24) Shift Solenoid-A (No.1) Control Circuit High / Shift Solenoid-B (No.2) Control Circuit Low 7B-88
DTC P0974 (No.21) / P0977 (No.23) Shift Solenoid-A (No.1) Control Circuit High / Shift Solenoid-B (No.2) Control Circuit High 7B-90
DTC P1702 (No.52) Internal Control Module Memory Check Sum Error 7B-92
DTC P1703 (No.86) CAN Invalid Data from Other ECU (M13 Engine Model with VVT) 7B-92
DTC P1705 (No.51) Engine Coolant Temperature Signal Circuit Malfunction (M13 Engine Model without VVT) 7B-93
DTC P1724 (No.33) Throttle Position Signal Circuit Low (M13 Engine Model without VVT) 7B-95
DTC P1725 (No.32) Throttle Position Signal Circuit High (M13 Engine Model without VVT) 7B-97
DTC P1730 (No.64) Engine Torque Signal Circuit Malfunction (M13 Engine Model without VVT) 7B-99
DTC P1735 (No.56) Air Conditioner Signal Circuit Malfunction (M13 Engine Model without VVT) 7B-101
DTC P1774 (No.76) Control Module Communication Bus Off (M13 Engine Model with VVT) 7B-103
DTC P1775 (No.76) High Speed CAN Communication Bus (Transmit Error) (M13 Engine Model with VVT) 7B-105
DTC P1777 (No.76) TCM Lost Communication with ECM (Reception Error) (M13 Engine Model with VVT) 7B-108
DTC P1895 (No.27) Torque Reduction Signal Circuit Malfunction (M13 Engine Model without VVT) 7B-111
DTC P2769 (No.26) Torque Converter Clutch (TCC) Circuit Low 7B-113
DTC P2770 (No.25) Torque Converter Clutch (TCC) Circuit High 7B-115
Scan Tool Data 7B-117
Inspection of TCM and Its Circuits 7B-121

On-Vehicle Service 7B-131

Maintenance Service 7B-131
Fluid level check at normal operating (hot) temperature (Hot check) 7B-131
Fluid change 7B-132
A/T fluid cooler hoses 7B-132
Select Lever Assembly Components 7B-133
Select Lever Assembly Installation 7B-133
Select Lever Knob Installation 7B-133
Select Lever Inspection 7B-134
“3” Position Switch Inspection 7B-134
Select Control System Components 7B-135
Selector Rod Removal and Installation 7B-136
Transmission Range Sensor (Shift Switch) 7B-137
Output Shaft Speed Sensor Removal and Installation 7B-138
Output Shaft Speed Sensor Inspection 7B-138
Input Shaft Speed Sensor Removal and Installation 7B-139
Input Shaft Speed Sensor Inspection 7B-139
Throttle Position Sensor 7B-140
Engine Coolant Temperature Sensor 7B-140
Solenoid Valves (Shift Solenoid Valves, TCC Solenoid Valve and Timing Solenoid Valve) Removal and Installation 7B-140
Solenoid Valves (Shift Solenoid Valves, TCC Solenoid Valve and Timing Solenoid Valve) Inspection 7B-142
Pressure Control Solenoid Valve Removal and Installation 7B-144
Pressure Control Solenoid Valve Inspection 7B-146
Transmission Control Module (TCM) Removal and Installation 7B-147
Learning Control Initialization 7B-148
Transmission Fluid Temperature Sensor Removal and Installation 7B-149

Transmission Fluid Temperature Sensor Inspection 7B-151
Extension Case Oil Seal Replacement 7B-151
Interlock Cable Removal and Installation (if equipped) 7B-152
Automatic Transmission Assembly 7B-155
Automatic Transmission Assembly Dismounting and Remounting 7B-156
Unit Repair 7B-159
Automatic Transmission Unit Components 7B-159
Automatic Transmission Unit Disassembly 7B-163
Automatic Transmission Unit Reassembly 7B-172
Oil Pump Components 7B-185
Oil Pump Assembly Disassembly and Reassembly 7B-185
Oil Pump Assembly Inspection 7B-187
Forward Clutch & Input Shaft Assembly Components 7B-189
Forward Clutch & Input Shaft Assembly Disassembly and Reassembly 7B-190
Forward Clutch & Input Shaft Assembly Inspection 7B-192
Direct Clutch & Output Shaft Assembly Components 7B-194
Direct Clutch & Output Shaft Assembly Disassembly and Reassembly 7B-195
Direct Clutch & Output Shaft Assembly Inspection 7B-199
Reverse Clutch Assembly Components .. 7B-201
Reverse Clutch Assembly Disassembly and Reassembly 7B-201
Reverse Clutch Assembly Inspection 7B-204
O/D and 2nd Coast Brake Components .. 7B-206
O/D and 2nd Coast Brake Disassembly and Reassembly 7B-206
O/D and 2nd Coast Brake Inspection 7B-207
2nd Brake Components 7B-208
2nd Brake Disassembly and Reassembly 7B-209
2nd Brake Inspection 7B-210
1st & Reverse Brake Components..... 7B-211
1st & Reverse Brake Inspection..... 7B-211
One-way Clutch No.1 Inspection 7B-212
One-way Clutch No.2 Inspection 7B-212
Front Sun Gear Inspection..... 7B-213
Rear Sun Gear Inspection 7B-213
Planetary Gear Assembly Inspection..... 7B-213
Transmission Case Inspection..... 7B-214
Tightening Torque Specification 7B-214
Special Tool 7B-215
Required Service Material 7B-216

General Description

This automatic transmission is electronic control full automatic transmission with forward 4-speed and reverse 1-speed.

The torque converter is a 3-element, 1-step and 2-phase type and is equipped with an automatically controlled lock-up mechanism.

The gear change device consists of a ravigneau type planetary gear unit, 3 multiple disc type clutches, 3 multiple disc type brakes and 2 one-way clutches.

The hydraulic pressure control device consists of a valve body assembly, pressure control solenoid valve (linear solenoid), 2 shift solenoid valves, TCC (lock-up) solenoid valve and a timing solenoid valve. Optimum line pressure complying with engine torque is produced by the pressure control solenoid valve in dependence upon control signal from transmission control module (TCM). This makes it possible to control the line pressure with high accuracy in accordance with the engine power and running conditions to achieve smooth shifting characteristics and high efficiency.

A clutch-to-clutch control system is provided for shifting between 3rd gear and 4th gear. This clutch-to-clutch control system is made to function optimally, so that hydraulic pressure controls such as shown below are conducted.

- When upshifting from 3rd gear to 4th gear, to adjust the drain hydraulic pressure at releasing the forward clutch, a timing solenoid valve is used to switch a hydraulic passage with an orifice to another during shifting.
- When downshifting from 4th gear to 3rd gear, to adjust the line pressure applied to the forward clutch at engaging the forward clutch, a timing solenoid valve is used to switch a hydraulic passage with an orifice to another during shifting.
- When upshifting from 3rd gear to 4th gear with engine throttle opened, to optimize the line pressure applied to the forward clutch at releasing the forward clutch, the learning control is processed to compensate the switching timing of the timing solenoid at every shifting.
- When downshifting from 4th gear to 3rd gear with engine throttle opened, to optimize the line pressure applied to the forward clutch at engaging the forward clutch, the learning control is processed to compensate the line pressure every shifting.

Employing a ravigneau type planetary gear unit and this clutch-to-clutch control system greatly simplifies the construction to make possible a lightweight and compact transmission.

A line pressure learning control is conducted to provide optimum shifting time at every upshifting with engine throttle opened. If long upshifting time is detected, the subsequent line pressure applied during upshifting is intensified. On the contrary, if short upshifting time is detected, the subsequent line pressure applied during upshifting is weakened.

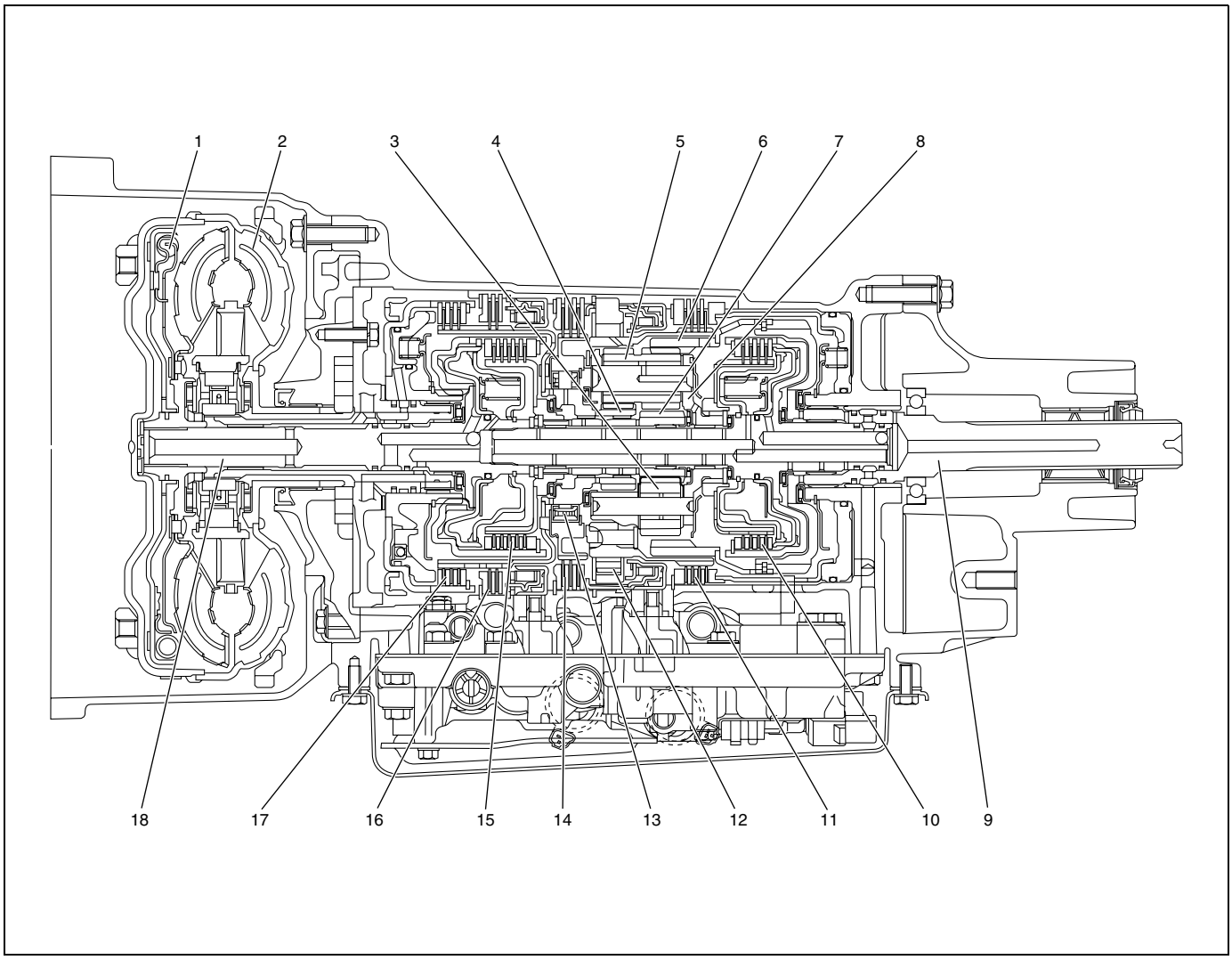

1. Torque converter clutch (TCC)	7. Rear sun gear	13. One-way No.1 clutch
2. Torque converter	8. Planet carrier	14. 2nd brake
3. Short planet pinion	9. Output shaft	15. Forward clutch
4. Front sun gear	10. Direct clutch	16. O/D and 2nd coast brake
5. Long planet pinion	11. 1st and reverse brake	17. Reverse brake
6. Ring gear	12. One-way No.2 clutch	18. Input shaft

Specifications

<table>
<tr><th colspan="3">Item</th><th colspan="3">Specifications</th></tr>
<tr><td>Torque converter</td><td colspan="2">Type
Stall torque ratio</td><td colspan="3">3-element, 1-step, 2-phase type (with TCC (lock-up) mechanism)
2.2</td></tr>
<tr><td>Oil pump</td><td colspan="2">Type
Drive system</td><td colspan="3">Internal involute gear type oil pump (non crescent type)
Engine driven</td></tr>
<tr><td rowspan="11">Gear change device</td><td colspan="2">Type</td><td colspan="3">Forward 4-step, reverse 1-step planetary gear type</td></tr>
<tr><td rowspan="6">Shift position</td><td colspan="2">“P” range</td><td colspan="2">Gear in neutral, output shaft fixed, engine start</td></tr>
<tr><td colspan="2">“R” range</td><td colspan="2">Reverse</td></tr>
<tr><td colspan="2">“N” range</td><td colspan="2">Gear in neutral, engine start</td></tr>
<tr><td colspan="2">“D” range
(O/D ON)</td><td colspan="2">Forward 1st ↔ 2nd ↔ 3rd ↔ 4th
automatic gear change</td></tr>
<tr><td colspan="2">“3” range</td><td colspan="2">Forward 1st ↔ 2nd ↔ 3rd ← 4th
automatic gear change</td></tr>
<tr><td colspan="2">“2” range</td><td colspan="2">Forward 1st ↔ 2nd ← 3rd
automatic gear change</td></tr>
<tr><td colspan="2">“L” range</td><td colspan="2">Forward 1st ← 2nd ← 3rd reduction, and fixed at 1st gear</td></tr>
<tr><td rowspan="4">Gear ratio</td><td>1st</td><td>2.875</td><td rowspan="4">Number of teeth</td><td rowspan="4">Front sun gear: 24
Rear sun gear: 30
Long planet pinion: 20
Short planet pinion: 19
Ring gear: 69</td></tr>
<tr><td>2nd</td><td>1.568</td></tr>
<tr><td>3rd</td><td>1.000</td></tr>
<tr><td>4th
(overdrive gear)</td><td>0.696</td></tr>
<tr><td colspan="2">Control elements</td><td colspan="3">Wet type multiple-disc clutch ... 3 sets
Wet type multiple-disc brake ... 3 sets
One-way clutch ... 2 sets</td></tr>
<tr><td colspan="2">Final gear reduction ratio</td><td colspan="3">4.091</td></tr>
<tr><td>Lubrication</td><td colspan="2">Lubrication system</td><td colspan="3">Force feed system by oil pump</td></tr>
<tr><td>Cooling</td><td colspan="2">Cooling system</td><td colspan="3">Radiator assisted cooling (water-cooled)</td></tr>
<tr><td colspan="3">Fluid used</td><td colspan="3">DEXRON®-III</td></tr>
</table>

Clutch / Brake / Planetary Gear

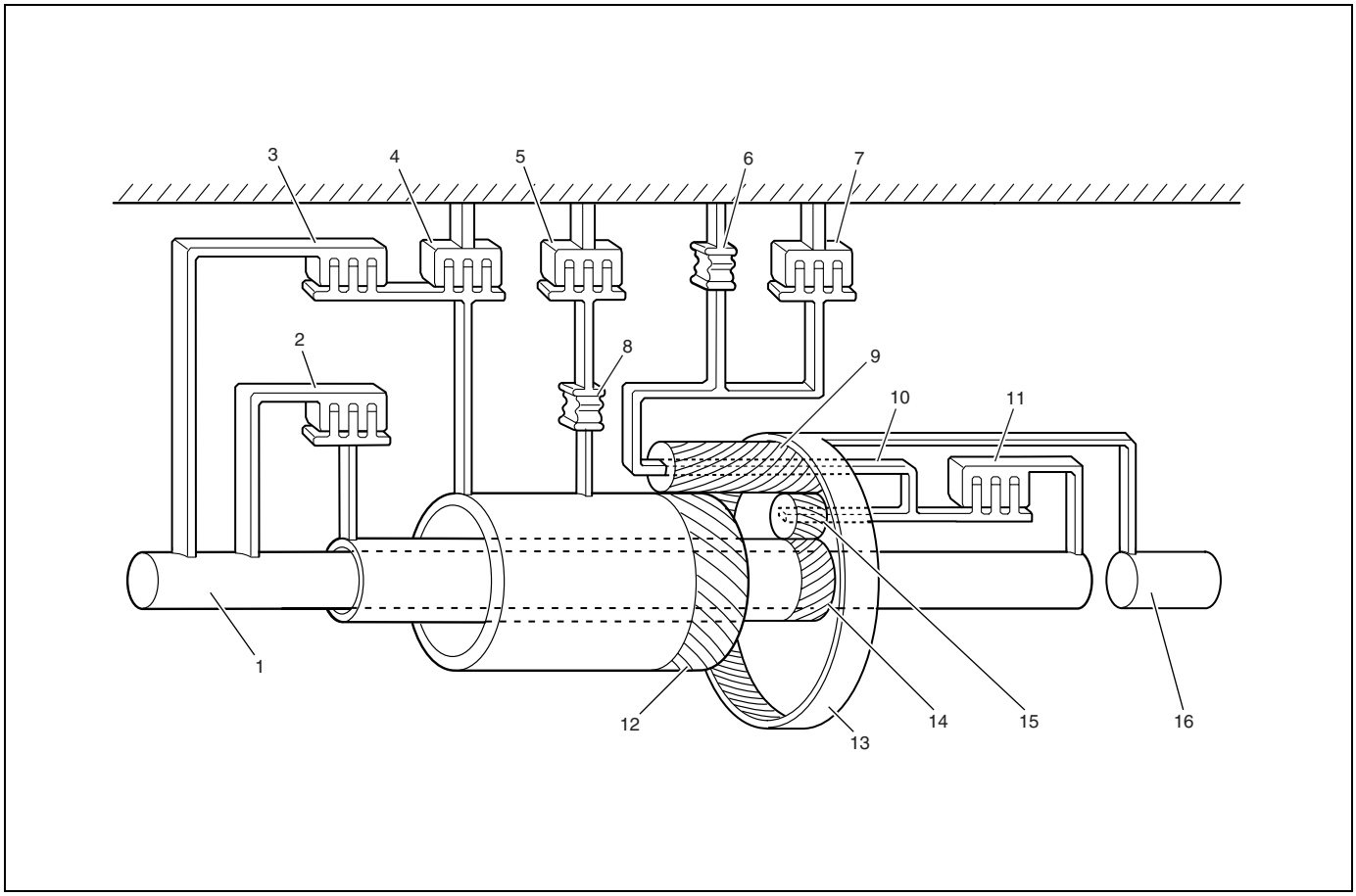

1. Input shaft	7. 1st and reverse brake	13. Ring gear
2. Forward clutch	8. One-way No.1 clutch	14. Rear sun gear
3. Reverse clutch	9. Long planet pinion	15. Short planet pinion
4. O/D and 2nd coast brake	10. Planet carrier	16. Output shaft
5. 2nd brake	11. Direct clutch	
6. One-way No.2 clutch	12. Front sun gear	

Functions

PART NAME	FUNCTION
Forward clutch	Meshes intermediate shaft and rear sun gear
Direct clutch	Meshes input shaft and planet carrier
Reverse clutch	Meshes intermediate shaft and front sun gear
O/D and 2nd coast brake	Fixes front sun gear
2nd brake	Fixes front sun gear
1st and reverse brake	Fixes planet carrier
One-way No.1 clutch	Prevents front sun gear from turning counterclockwise
One-way No.2 clutch	Prevents planet carrier from turning counterclockwise

Table of Component Operation

Selector position	Part / Gear position	Shift solenoid valve-A (No.1)	Shift solenoid valve-B (No.2)	TCC solenoid valve	Forward clutch	Direct clutch	Reverse clutch	O/D and 2nd coast brake	2nd brake	1st and reverse brake	One-way No.1 clutch	One-way No.2 clutch
P	Parking	○	○	×	×	×	×	×	×	×	×	×
R	Reverse	○	○	×	×	×	○	×	×	○	×	×
N	Neutral	○	○	×	×	×	×	×	×	×	×	×
D	1st	○	○	×	○	×	×	×	×	×	×	○
	2nd	○	×	×	○	×	×	×	○	×	○	×
	3rd	×	×	△	○	○	×	×	○	×	×	×
	4th	×	○	△	×	○	×	○	○	×	×	×
2	1st	○	○	×	○	×	×	×	×	×	×	○
	2nd	○	×	×	○	×	×	○	○	×	○	×
L	1st	○	○	×	○	×	×	×	×	○	×	○

○ : ON　　× : OFF　　△ : ON only when TCC is operating

Electronic Shift Control System

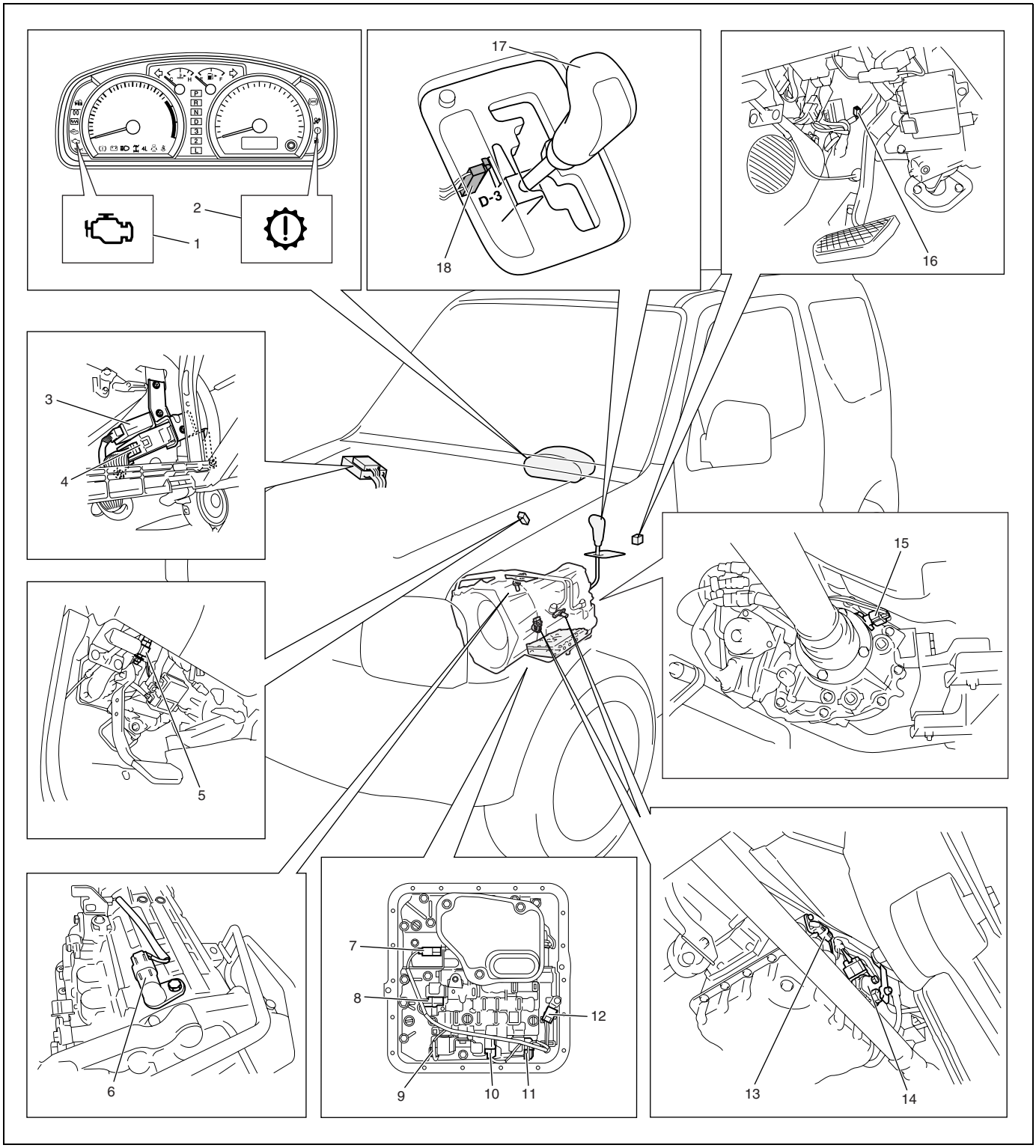

1. MIL	7. Pressure control solenoid valve	13. Output shaft speed sensor
2. Transmission warning light	8. Timing solenoid valve	14. Transmission range sensor
3. TCM	9. Shift solenoid valve-B/No.2	15. Vehicle speed sensor (VSS)
4. ECM	10. Shift solenoid valve-A/No.1	16. Monitor connector
5. Brake light switch	11. TCC lock-up solenoid valve	17. Select lever assembly
6. Input shaft speed sensor	12. Transmission fluid temperature sensor	18. “3” position switch

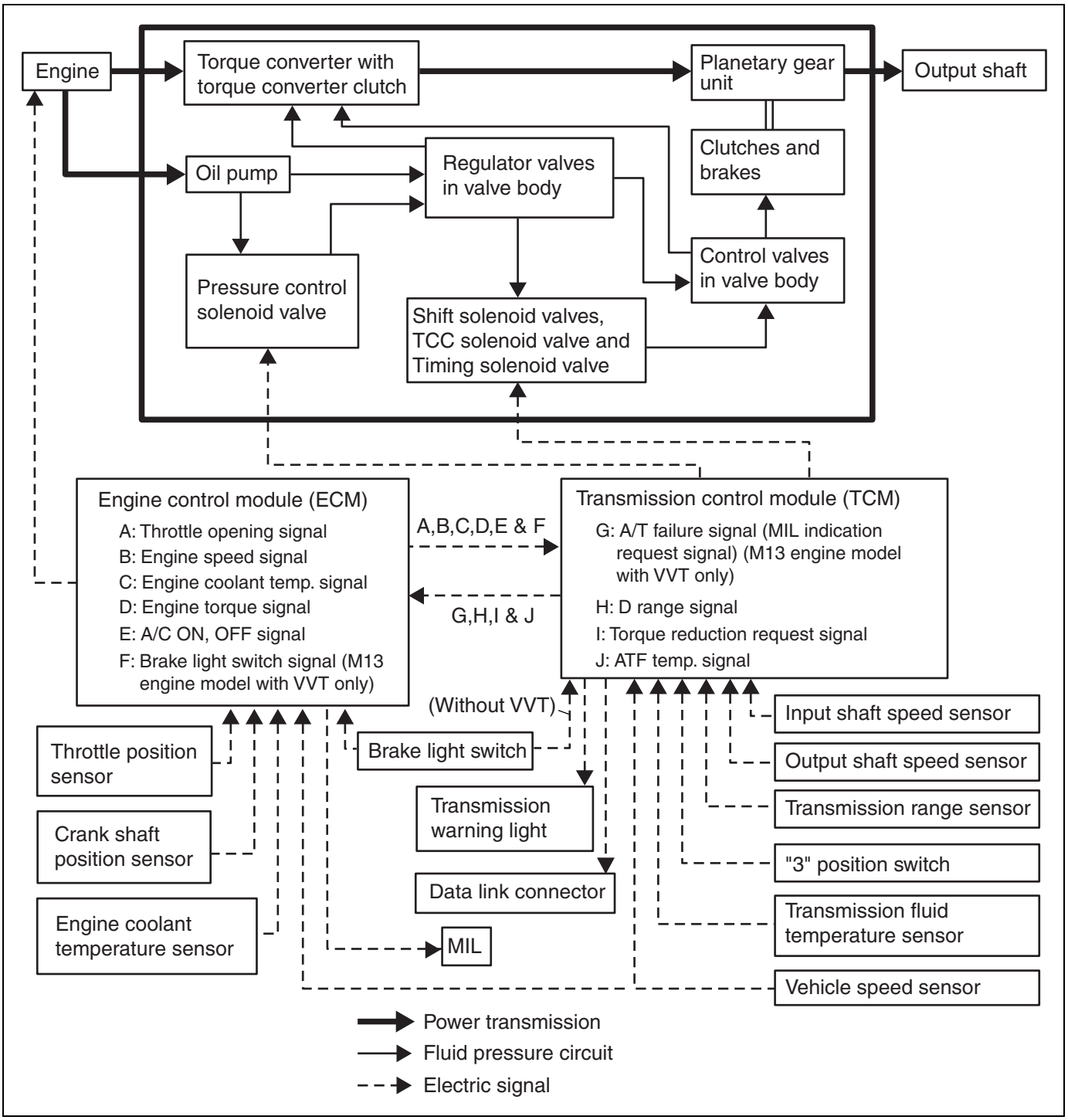
Engine
Torque converter with torque converter clutch
Planetary gear unit
Output shaft
Clutches and brakes
Oil pump
Regulator valves in valve body
Control valves in valve body
Pressure control solenoid valve
Shift solenoid valves, TCC solenoid valve and Timing solenoid valve
Engine control module (ECM)
A: Throttle opening signal
B: Engine speed signal
C: Engine coolant temp. signal
D: Engine torque signal
E: A/C ON, OFF signal
F: Brake light switch signal (M13 engine model with VVT only)
A,B,C,D,E & F
G,H,I & J
Transmission control module (TCM)
G: A/T failure signal (MIL indication request signal) (M13 engine model with VVT only)
H: D range signal
I: Torque reduction request signal
J: ATF temp. signal
(Without VVT)
Input shaft speed sensor
Output shaft speed sensor
Transmission range sensor
"3" position switch
Transmission fluid temperature sensor
Vehicle speed sensor
Throttle position sensor
Brake light switch
Transmission warning light
Crank shaft position sensor
Data link connector
Engine coolant temperature sensor
MIL
Power transmission
Fluid pressure circuit
Electric signal

CAN Communication System (M13 Engine Model with VVT)

CAN communication system uses the serial communication in which data is transmitted at a high speed. It uses a twisted pair of two communication lines for the high-speed data transmission. As one of its characteristics, multiple control modules can communicate simultaneously. In addition, it has a functionality to detect a communication error automatically. Each module reads necessary data from the received data and transmits data. Communication of ECM and TCM is established by CAN.

TCM transmission data to ECM

- Torque down ignition delay request
- Transmission torque converter clutch mode
- Transmission turbine angular velocity
- Transmission emissions related malfunction active
- Slope mode
- Transmission gear selector position
- Transmission actual gear
- Transmission oil temperature
- Drive signal

TCM reception data from ECM

- Engine torque driver requested
- Engine speed
- Top gear inhibit
- Torque converter clutch control inhibit
- Throttle position
- Ignition timing advance for #1 cylinder
- Vehicle speed
- Engine coolant temperature
- Brake pedal switch active
- Air conditioning compressor clutch engaged

Transmission Control Module (TCM)

M13 engine model with VVT

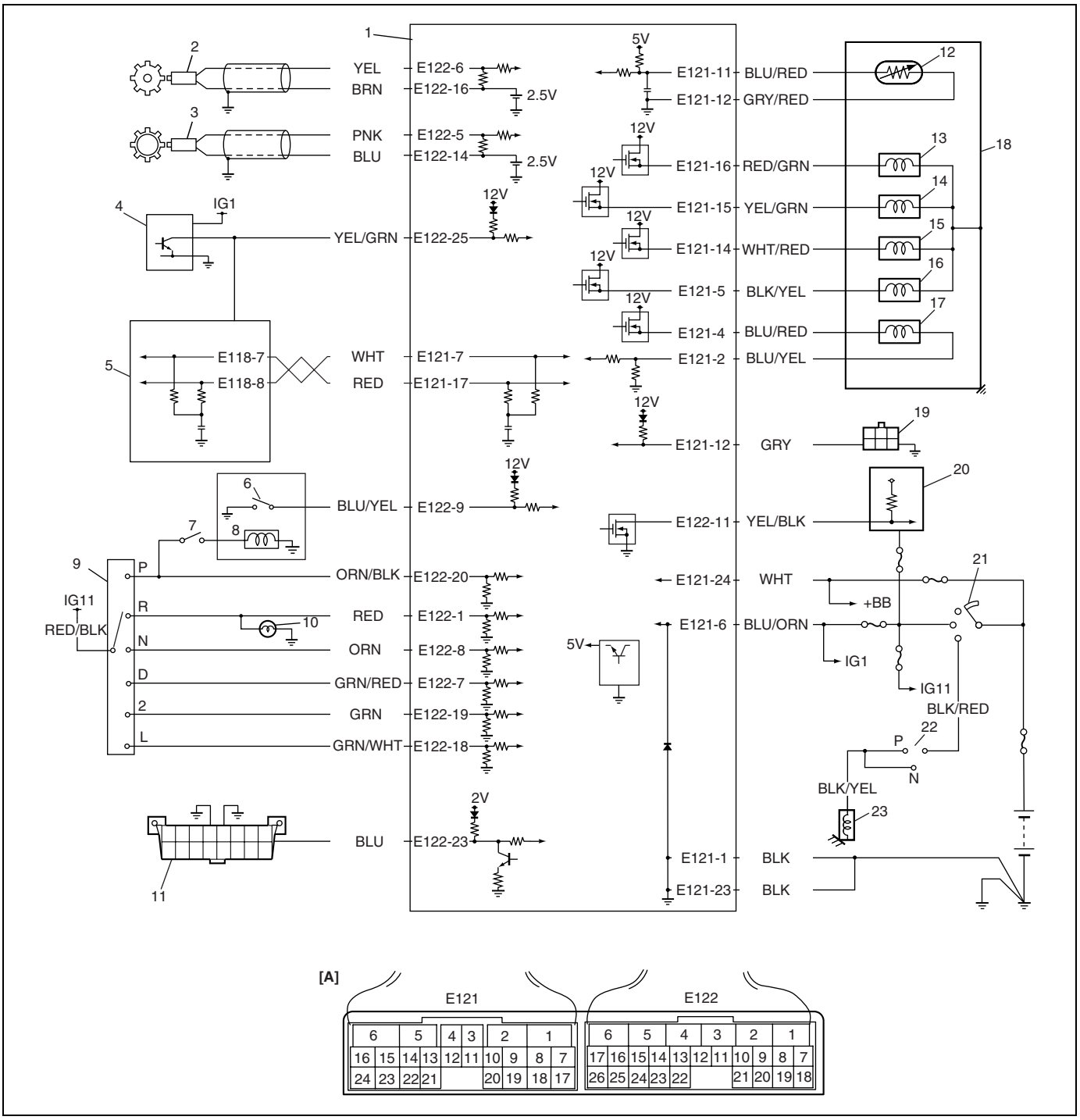

1. TCM	9. Transmission range sensor	17. Pressure control solenoid valve
2. Input shaft speed sensor	10. Back up lamp	18. A/T
3. Output shaft speed sensor	11. Data link connector (DLC)	19. Monitor connector
4. Vehicle speed sensor (VSS)	12. Transmission fluid temperature sensor	20. Combination meter
5. ECM	13. Shift solenoid valve-A/No.1	21. Ignition switch
6. “3” position switch	14. Shift solenoid valve-B/No.2	22. Inhibitor switch (including transmission range sensor)
7. Brake light switch	15. Timing solenoid valve	23. Starting motor
8. Shift lock solenoid (if equipped)	16. TCC lock-up solenoid valve	[A]: Terminal arrangement of TCM connector (viewed from harness side)

M13 engine model without VVT

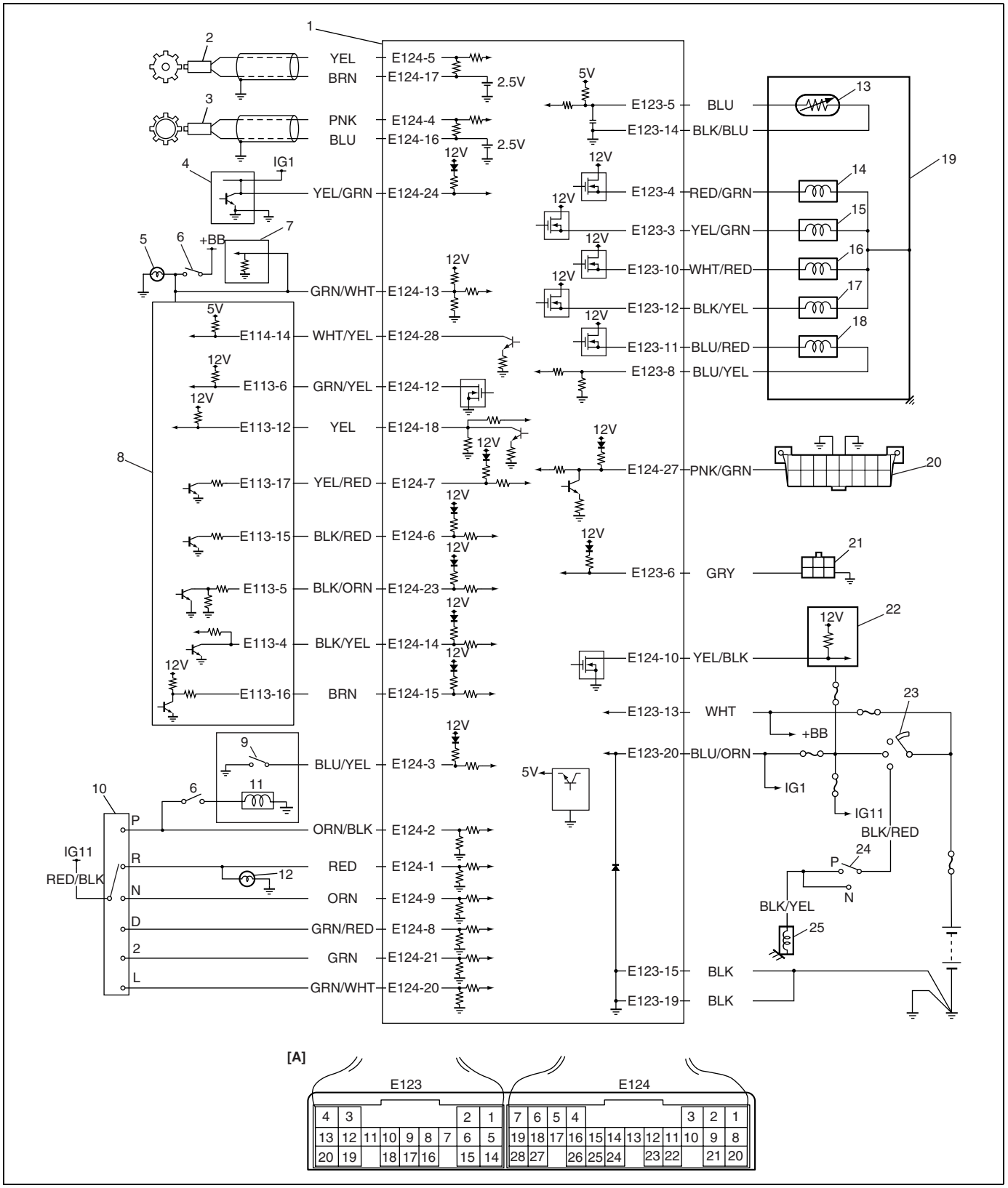

1. TCM	10. Transmission range sensor	19. A/T
2. Input shaft speed sensor	11. Shift lock solenoid (if equipped)	20. Data link connector (DLC)
3. Output shaft speed sensor	12. Back up lamp	21. Monitor connector
4. Vehicle speed sensor (VSS)	13. Transmission fluid temperature sensor	22. Combination meter
5. Brake light	14. Shift solenoid valve-A/No.1	23. Ignition switch
6. Brake light switch	15. Shift solenoid valve-B/No.2	24. Inhibitor switch (including transmission range sensor)
7. ABS	16. Timing solenoid valve	25. Starting motor
8. ECM	17. TCC lock-up solenoid valve	[A]: Terminal arrangement of TCM connector (viewed from harness side)
9. "3" position switch	18. Pressure control solenoid valve	

Operation of shift solenoid valves, timing solenoid valve and TCC solenoid valve

Selector position	Solenoid / Gear position	Shift solenoid valve-A (No.1)	Shift solenoid valve-B (No.2)	Timing solenoid valve	TCC solenoid valve	Condition
P	Parking	○	○	×	×	
R	Reverse	○	○	×	×	When vehicle is traveling forwards in less than 9 km/h, 6 mile/h vehicle speed.
		○	○	○	×	When vehicle is traveling forwards in 11km/h, 7mile/h or more vehicle speed.
	(Reverse)	×	×	×	×	When fail safe function is operating.
N	Neutral	○	○	×	×	
D	Neutral →1st			○		Timing solenoid is turned ON for about 0.5 sec. while on gear shifting
	1st	○	○	×	×	
	2nd	○	×	×	×	
	3rd	×	×	×	△	
	3rd ↔ 4th			○		Timing solenoid is turned ON for about 0.5 sec. while on gear shifting
	4th (O/D)	×	○	×	△	
	(3rd)	×	×	×	×	When fail safe function is operating.
2	1st	○	○	×	×	
	2nd	○	×	×	×	
	(3rd)	×	×	×	×	When fail safe function is operating.
L	1st	○	○	×	×	
	(3rd)	×	×	×	×	When fail safe function is operating.

○ : ON (Turn power ON)
× : OFF (Turn power OFF)
△ : ON only when TCC is operating

	Valve status	
	Turn power ON	Turn power OFF
Shift solenoid valve-A (No.1)	Close	Open
Shift solenoid valve-B (No.2)	Close	Open
Timing solenoid	Open	Close
TCC (lock-up) solenoid	Close	Open

Automatic gear shift table

Automatic gear shift schedule is shown in the following table. Test-drive the vehicle on a flat road in the D position.

Shift point in D, 3 and/or 2 position

	Throttle opening (%)	Shift	Vehicle speed km/h (mph)	Remark
UP shift	Over 80%	1st → 2nd	46 – 51 (29 – 20)	
		2nd → 3rd	80 – 85 (50 – 53)	
		3rd → 4th	133 – 138 (83 – 86)	
	50%	1st → 2nd	21 – 26 (13 – 16)	
		2nd → 3rd	40 – 45 (25 – 28)	
		3rd → 4th	70 – 75 (43 – 47)	
	10%	1st → 2nd	13 – 18 (8 – 11)	
		2nd → 3rd	27 – 32 (17 – 20)	
		3rd → 4th	41 – 46 (25 – 29)	
DOWN shift	Over 90%	4th → 3rd	123 – 128 (76 – 80)	
		3rd → 2nd	80 – 85 (50 – 53)	
		2nd → 1st	35 – 40 (22 – 25)	
	50%	4th → 3rd	55 – 60 (34 – 37)	
		3rd → 2nd	31 – 36 (19 – 22)	
		2nd → 1st	21 – 26 (13 – 16)	
	0%	4th → 3rd	31 – 36 (19 – 22)	
		3rd → 2nd	20 – 25 (12 – 16)	
		2nd → 1st	11 – 16 (7 – 10)	

Lock-up point in D and/or 3 position

	Lock-up clutch status	Throttle opening (%)	Vehicle speed km/h (mph)	Remark
3rd gear lock-up	ON	Over 85%	113 – 118 (70 – 73)	
		50%	74 – 79 (46 – 49)	
	OFF	Over 85%	103 – 108 (64 – 67)	
		50%	63 – 68 (39 – 42)	
4th gear lock-up	ON	Over 85%	133 – 138 (83 – 86)	
		55%	98 – 103 (61 – 64)	
	OFF	Over 85%	123 – 128 (76 – 80)	
		55%	82 – 87 (51 – 54)	

Diagnosis

General Description

TCM has an On-Board Diagnosis System which detects a malfunction in this system.
When diagnosing a trouble in transmission including this system, be sure to have full understanding of the outline of “On-Board Diagnostic System” and each item in “Precaution in Diagnosing Trouble” and execute diagnosis according to “Automatic Transmission Diagnostic Flow Table” given below to obtain correct result smoothly.

NOTE:

There are two type of On-Board Diagnostic System, M13 engine model with VVT and M13 engine model without VVT, depending on vehicle specifications. Identify the type of system for vehicle being serviced by whether the engine equipped with VVT or not.

On-Board Diagnostic System

[M13 engine model with VVT]

For automatic transmission control system, TCM has following functions.

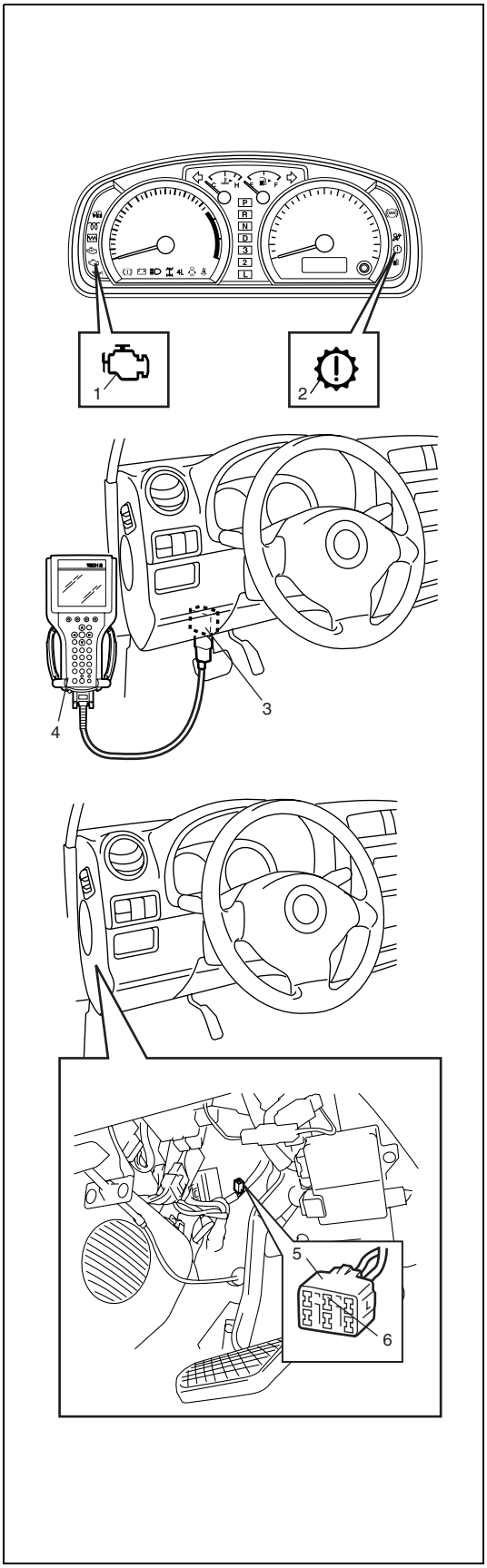

- When the ignition switch is turned ON with the engine at a stop, malfunction indicator lamp (MIL) (1) turns ON to check the bulb of the MIL.
- When TCM detects a malfunction in A/T control system (and/or a malfunction which gives an adverse effect to vehicle emission) while the engine is running, TCM requires ECM to make the malfunction indicator lamp in the meter cluster of the instrument panel turn ON. TCM stores DTC / freeze frame data in TCM memory.
  (If it detects that continuously 3 driving cycles are normal after detecting a malfunction, however, it makes MIL turn OFF although DTC stored in its memory will remain.)
- It is possible to communicate with TCM through DLC (3) by using scan tool (4). (Diagnostic information can be accessed by using a scan tool.)
- It is also possible to output DTC stored in TCM by flashing of transmission warning light (2) with diagnosis switch terminal (6) of monitor connector (5) grounded. If no DTC is stored in TCM memory, DTC No.12 is outputted repeatedly. If one or more DTCs are stored in TCM memory, they are outputted three times per one code starting from smallest code number in increasing order. After all DTCs are outputted, they are outputted again in the same manner.

2 driving cycle detection logic

The malfunction detected in the first driving cycle is stored in TCM memory (in the form of pending DTC and freeze frame data) but the malfunction indicator lamp does not light at this time. It lights up at the second detection of same malfunction also in the next driving cycle.

Pending DTC

Pending DTC means a DTC detected and stored temporarily at 1 driving cycle of the DTC which is detected in the 2 driving cycle detection logic.

Freeze frame data

TCM stores the engine and driving conditions at the moment of the detection of a malfunction in its memory. This data is called “Freeze frame data”.

Therefore, it is possible to know engine and driving conditions (e.g., whether the engine was warm or not, where the vehicle was running or stopped) when a malfunction was detected by checking the freeze frame data.

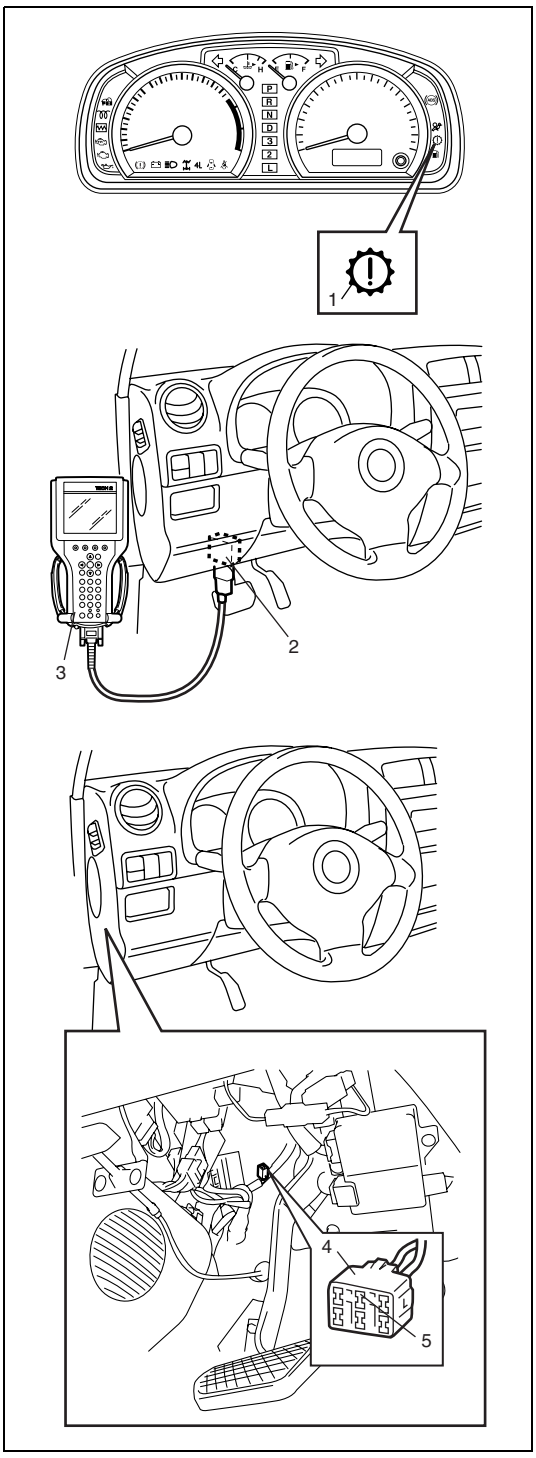

[M13 engine model without VVT]

For automatic transmission control system, TCM has following functions.

- When ignition switch is turned ON with no malfunction in A/T control system is detected, transmission warning light (1) lights for about 2 seconds after ignition switch is turned ON and then goes OFF for bulb check.
- When TCM detects a malfunction in A/T control system, it indicates transmission warning light (1) and stores malfunction DTC in its memory.
- It is possible to communicate with TCM through data link connector (DLC) (2) by using SUZUKI scan tool (3). Diagnostic information can be checked and erased by using scan tool.
- It is also possible to output DTC stored in TCM by flashing of transmission warning light (1) with diagnosis switch terminal (5) of monitor connector (4) grounded. If no DTC is stored in TCM memory, DTC No.12 is outputted repeatedly. If one or more DTCs are stored in TCM memory, they are outputted three times per one code starting from smallest code number in increasing order. After all DTCs are outputted, they are outputted again in the same manner.

Precaution in Diagnosing Trouble

- Do not disconnect couplers from TCM, battery cable from battery, TCM ground wire harness from engine or main fuse before checking the diagnostic information (DTC, freeze frame data, etc.) stored in TCM memory. Such disconnection will clear memorized information in TCM memory.
- For M13 engine model with VVT, diagnostic information stored in TCM memory can be cleared as well as checked by using SUZUKI scan tool or generic scan tool. Before using scan tool, read its Operator's (Instruction) Manual carefully to have good understanding as to what functions are available and how to use it.
  It is indistinguishable which module turns on MIL because not only ECM but also TCM turns on MIL. Therefore, check both ECM and TCM for DTC when MIL lights on.
  When checking TCM for DTC, keep in mind that DTC is displayed on the scan tool as follows depending on the scan tool used.
  – SUZUKI scan tool displays DTC detected by TCM.
  – Generic scan tool displays DTC detected by each of ECM and TCM simultaneously.
- For M13 engine model without VVT, using SUZUKI scan tool the diagnostic information stored in TCM memory can be checked and cleared as well. Before its use, be sure to read Operator's Manual supplied with it carefully to have good understanding of its functions and usage.
- Not using scan tool, the DTC stored in TCM memory also can be checked and cleared. DTC stored in the TCM memory is outputted by flashing of transmission warning light with diagnosis terminal of monitor connector grounded. If no DTC is stored in TCM memory, DTC No.12 is outputted repeatedly. If one or more DTCs are stored in TCM memory, they are outputted starting from smallest code number in increasing order. After all DTCs are outputted, all DTCs are outputted repeatedly.
- When replacing TCM with used one, all learned controls which are stored in TCM memory should be erased after the replacement referring to "Learning Control Initialization" in this section. Neglecting this initialization may cause excessive shift shock.
- Be sure to read "Precautions for Electrical Circuit Service" in Section 0A before inspection and observe what is written there.
- TCM and/or ECM replacement:
  When substituting a known-good TCM and/or ECM, check for the following conditions.
  Neglecting this check may result in damage to a good TCM and/or ECM.
  – All relays and actuators have resistance of specified value.
- For M13 engine model with VVT, communication of ECUs, ECM and TCM, is established by CAN (Controller Area Network). Therefore, handle CAN communication line with care referring to "Precaution for CAN Communication System" in Section 0A.

Automatic Transmission Diagnostic Flow Table

Refer to the following items for the details of each step.

Step	Action	Yes	No
1	Customer Complaint Analysis 1) Perform customer complaint analysis. Was customer complaint analysis performed according to instruction?	Go to Step 2.	Perform customer complaint analysis.
2	Diagnostic Trouble Code (DTC) / Freeze Frame Data Check, Record and Clearance 1) Check for DTC referring to the followings. Is there any DTC(s)?	1) Print DTC or write them down and clear them by referring to "DTC Clearance" in this section. 2) Go to Step 3.	Go to Step 4.
3	Visual Inspection 1) Perform visual inspection referring to the followings. Is there any faulty condition?	1) Repair or replace malfunction part. 2) Go to Step 11.	Go to Step 5.
4	Visual Inspection 1) Perform visual inspection referring to the followings. Is there any faulty condition?	1) Repair or replace malfunction part. 2) Go to Step 11.	Go to Step 8.
5	Trouble Symptom Confirmation 1) Confirm trouble symptom referring to the followings. Is trouble symptom identified?	Go to Step 6.	Go to Step 7.
6	Rechecking and Recording of DTC 1) Recheck for DTC referring to "DTC Check" in this section. Is there any DTC(s)?	Go to Step 9.	Go to Step 8.
7	Rechecking and Recording of DTC / Freeze Frame Data 1) Recheck for DTC referring to "DTC Check" in this section. Is there any DTC(s)?	Go to Step 9.	Go to Step 10.
8	Automatic Transmission Basic Inspection and Trouble Diagnosis Table 1) Check and repair according to "A/T Basic Check" and "Trouble Diagnosis Table" in this section. Are check and repair complete?	Go to Step 11.	1) Check and repair malfunction part(s). 2) Go to Step 11.
9	Troubleshooting for DTC 1) Check and repair according to applicable DTC Flow Table. Are check and repair complete?	Go to Step 11.	1) Check and repair malfunction part(s). 2) Go to Step 11.
10	Check for Intermittent Problems 1) Check for intermittent problems referring to the followings. Is there any faulty condition?	1) Repair or replace malfunction part(s). 2) Go to Step 11.	Go to Step 11.

Step	Action	Yes	No
11	Final Confirmation Test 1) Clear DTC if any. 2) Perform final confirmation test referring to the followings. Is there any problem symptom, DTC or abnormal condition?	Go to Step 6.	End.

1. Customer Complaint Analysis (See Customer Problem Inspection Form)
Record details of the problem (failure, complaint) and how it occurred as described by the customer.
For this purpose, use of such an inspection form will facilitate collecting information to the point required for proper analysis and diagnosis.

2. Diagnostic Trouble Code (DTC) / Freeze Frame Data Check, Record and Clearance
First, check DTC (including pending DTC) referring to “DTC Check” in this section. If DTC exists, print or write down DTC / Freeze frame data and then clear malfunction DTC(s) by referring to “DTC Clearance” in this section. Malfunction DTC indicates malfunction in the system but it is not possible to know from it whether the malfunction is occurring now or it occurred in the past and normal condition has been restored. In order to know that, check symptom in question according to Step 5 and then recheck DTC according to Step 6.
Diagnosing a trouble based on the DTC in this step only or failure to clear the DTC in this step may result in an faulty diagnosis, trouble diagnosis of a normal circuit or difficulty in troubleshooting which is otherwise unnecessary.

3 and 4. Visual Inspection
As a preliminary step, be sure to perform visual check of the items that support proper function of the engine and automatic transmission referring to “Visual Inspection” in this section.

5. Trouble Symptom Confirmation
Check trouble symptoms based on information obtained in Step 1 Customer Complaint Analysis and Step 2 DTC Check.
Also, reconfirm DTC according to “DTC Confirmation Procedure” described in each DTC Flow Table.

6 and 7. Rechecking and Record of DTC / Freeze Frame Data
Refer to “DTC Check” in this section for checking procedure.

8. Automatic Transmission Basic Check and Trouble Diagnosis Table
Perform basic check of A/T according to flow table of “Automatic Transmission Basic Check” first. When the end of the flow table has been reached, check the parts of the system suspected as a possible cause referring to “Trouble Diagnosis Table” and based on symptoms appearing on the vehicle (symptoms obtained through steps of customer complaint analysis, trouble symptom confirmation and/or A/T basic check) and repair or replace faulty parts, if any.

9. Diagnostic Trouble Code Flow Table (See each DTC Flow Table)
Based on the DTC indicated in Step 6/7 and referring to Diagnostic Trouble Code Flow Table in this section, locate the cause of the trouble, namely in a sensor, switch, wire harness, connector, actuator, TCM or other part and repair or replace faulty parts.

10. Check for Intermittent Problem
Check parts where an intermittent trouble is easy to occur (e.g. wire harness, connector, etc.), referring to “Intermittent and Poor Connection” in Section 0A and related circuit of DTC recorded in Step 2.

11. Final Confirmation Test

Confirm that the problem symptom has gone and the vehicle is free from any abnormal conditions. If what has been repaired is related to the malfunction DTC, clear the DTC once and check to ensure that no malfunction DTC is indicated.

Customer Problem Inspection Form (Example)

User name:	Model:	VIN:	
Date of issue:	Date of Reg.:	Date of problem:	Mileage:

PROBLEM SYMPTOMS
☐ Vehicle does not move (R, D, 2, L or any range)
☐ No upshift automatically (☐ 1st to 2nd ☐ 2nd to 3rd ☐ 3rd to 4th (O/D) ☐ 2 range ☐ D range)
☐ No downshift automatically (☐ 3rd to 2nd ☐ 2nd to 1st ☐ 4th (O/D) to 3rd ☐ 2 range ☐ D range)
☐ No gear change manually (☐ 1st ↔ 3rd ☐ 3rd ↔ 4th)
☐ TCC no lock-up ☐ TCC no lock-up off
☐ Automatic shift point too high or too low
☐ Excessive gear change shock (1st/2nd/3rd/4th (O/D)/Reverse)
☐ No kickdown
☐ Transmission slipping in (1st/2nd/3rd/4th (O/D)/Reverse)
☐ Others_____

VEHICLE/ENVIRONMENTAL CONDITION WHEN PROBLEM OCCURS	
Environmental Condition	
Weather Temperature Frequency Road	☐ Fair ☐ Cloudy ☐ Rain ☐ Always ☐ Other_____ (°F/ °C) ☐ Hot ☐ Warm ☐ Cool ☐ Cold ☐ always ☐ Always ☐ Sometimes (times/ day, month) ☐ Only once ☐ Under certain condition ☐ Urban ☐ Suburb ☐ Highway ☐ Mountainous ☐ Uphill ☐ Downhill ☐ Tarmacadam ☐ Gravel ☐ Other_____
Vehicle Condition	
Engine & transmission condition	☐ Cold/ ☐ Warming up phase/ ☐ Warmed up Engine speed (r/min.) Throttle opening (☐ Idle/ ☐ About % ☐ full) O/D cut switch (☐ ON/ ☐ OFF)
Vehicle condition	☐ At stop/ ☐ During driving (☐ Constant speed ☐ Accelerating ☐ Decelerating ☐ Braking) ☐ Right hand corner ☐ Left hand corner ☐ Vehicle speed (km/h mile/h) ☐ Other_____

"O/D OFF" lamp	☐ Blink ☐ Always ON ☐ Sometimes ON ☐ Always OFF ☐ Good condition
Malfunction indicator lamp	☐ Blink ☐ Always ON ☐ Sometimes ON ☐ Always OFF ☐ Good condition
Diagnostic trouble code	First check: ☐ No code ☐ Malfunction code ( )
	Second check: ☐ No code ☐ Malfunction code ( )

NOTE:

The above form is a standard sample. It should be modified according to conditions characteristic of each market.

DTC Table

NOTE:

Confirmation available table of automatic transmission related DTC is shown below.

	M13 engine model with VVT		M13 engine model without VVT	
	Code type I	Code type II	Code type I	Code type II
SUZUKI scan tool	○	×	○	×
Generic scan tool	○	×	×	×
Not using scan tool	×	○	×	○

○ : Available-DTC can be confirmed

× : Not available-DTC can not be confirmed

NOTE:

- **A: Driving cycles when MIL lighting and storing DTC in TCM memory for M13 engine model with VVT**
- **B: Driving cycles when transmission warning light flashing and storing DTC in TCM memory for M13 engine model without VVT**
- **Type 1 DTC: DTC code which can be checked by using scan tool.**
- **Type 2 DTC: DTC code which can be checked by using transmission warning light.**

DTC No.		Detecting item	Detecting condition (DTC will set when detecting)	A	B
Type 1	Type 2				
P0705	34	Transmission Range Sensor Circuit Malfunction (PRNDL Input)	Multiple signals are inputted simultaneously.	1 driving cycle	1 driving cycle
P0707		Transmission Range Sensor Circuit Low	No sensor signal is inputted.	2 driving cycles	2 driving cycles
P0712	38	Transmission Fluid Temperature Sensor “A” Circuit Low	Sensor output voltage is too low.	1 driving cycle	1 driving cycle
P0713	36	Transmission Fluid Temperature Sensor “A” Circuit High	Sensor output voltage is too high.	1 driving cycle	1 driving cycle
P0717	14	Input / Turbine Speed Sensor Circuit No Signal	No sensor signal is detected although output speed sensor signal is inputted.	1 driving cycle	1 driving cycle
P0722	31	Output Speed Sensor Circuit No Signal	No sensor signal is inputted although input speed sensor signal is inputted.	1 driving cycle	1 driving cycle
P0727	35	Engine Speed Input Circuit No Signal	No engine speed signal is inputted although input speed sensor signal is inputted.	–	1 driving cycle
P0741	78	Torque Converter Clutch Circuit Performance or Stuck Off	Difference in revolution between engine and input shaft is too large although TCM is commanding TCC solenoid to turn ON.	2 driving cycles	–

DTC No.		Detecting item	Detecting condition (DTC will set when detecting)	A	B
Type 1	Type 2				
P0742	77	Torque Converter Clutch Circuit Stuck On	Difference in revolution between engine and input shaft is too small although TCM is commanding TCC solenoid to turn OFF.	2 driving cycles	–
P0751	62	Shift Solenoid “A” Performance or Stuck Off	Actual gear position is 3rd gear although TCM command is for 2nd gear.	2 driving cycles	–
P0752	61	Shift Solenoid “A” Stuck On	Actual gear position is 2nd gear although TCM command is for 3rd gear.	2 driving cycles	–
P0756	65	Shift Solenoid “B” Performance or Stuck Off	Actual gear position is 3rd gear although TCM command is for 4th gear.	2 driving cycles	–
P0757	63	Shift Solenoid “B” Stuck On	Actual gear position is 4th gear although TCM command is for 3rd gear.	2 driving cycles	–
P0787	13	Shift / Timing Solenoid Control Circuit Low	Voltage of timing solenoid terminal is low although TCM is commanding timing solenoid to turn ON.	1 driving cycle	1 driving cycle
P0788		Shift / Timing Solenoid Control Circuit High	Voltage of timing solenoid terminal is high although TCM is commanding timing solenoid to turn OFF.	1 driving cycle	1 driving cycle
P0962	41	Pressure Control Solenoid “A” Control Circuit Low	No electric flow is detected on pressure control solenoid circuit.	1 driving cycle	1 driving cycle
P0963	42	Pressure Control Solenoid “A” Control Circuit High	Too much electric flow is detected on pressure control solenoid circuit.	1 driving cycle	1 driving cycle
P0973	22	Shift Solenoid “A” Control Circuit Low	Voltage of shift solenoid terminal is low although TCM is commanding shift solenoid to turn ON.	1 driving cycle	1 driving cycle
P0974	21	Shift Solenoid “A” Control Circuit High	Voltage of shift solenoid terminal is high although TCM is commanding shift solenoid to turn OFF.	1 driving cycle	1 driving cycle
P0976	24	Shift Solenoid “B” Control Circuit Low	Voltage of shift solenoid terminal is low although TCM is commanding shift solenoid to turn ON.	1 driving cycle	1 driving cycle
P0977	23	Shift Solenoid “B” Control Circuit High	Voltage of shift solenoid terminal is high although TCM is commanding shift solenoid to turn OFF.	1 driving cycle	1 driving cycle
P1702	52	Internal Control Module Memory Check Sum Error	Calculation of current data stored in TCM is not correct comparing with pre-stored checking data in TCM.	1 driving cycle	1 driving cycle
P1703	86	CAN Invalid Data from other ECU	TCM receives malfunction signal of throttle position, engine coolant temperature, engine revolution and engine torque from ECM.	*1	–

DTC No.		Detecting item	Detecting condition (DTC will set when detecting)	A	B
Type 1	Type 2				
P1705	51	Engine Coolant Temperature Signal Circuit Malfunction	• Too long high signal of pulse signal from ECM to TCM continues out of specification. • Too long low signal of pulse signal from ECM to TCM continues out of specification. Or • Too short low signal of pulse signal from ECM to TCM continues out of specification.	–	1 driving cycle
P1723	87	Range Select Switch Malfunction	Signal of select switch is ON during 1 drive cycle.	*1	*2
P1724	33	Throttle Position Signal Input Circuit Low	Too short low signal of pulse signal from ECM to TCM continues to be out of specification.	–	1 driving cycle
P1725	32	Throttle Position Signal Input Circuit High	Too long low signal of pulse signal from ECM to TCM continues to be out of specification.	–	1 driving cycle
P1730	64	Engine Torque Signal Circuit Malfunction	• Too long high signal of pulse signal from ECM to TCM continues to be out of specification. Or • Too long low signal of pulse signal from ECM to TCM continues to be out of specification.	–	1 driving cycle
P1735	56	Air Conditioner Signal Circuit Malfunction	Too long low signal of engine coolant temperature pulse signal from ECM to TCM continues to be out of specification.	–	1 driving cycle
P1774	76	Control Module Communication Bus Off	Transmission error that is inconsistent between transmission data and transmission monitor (CAN bus monitor) data is detected more than 7 times continuously.	1 driving cycle	–
P1775		High Speed CAN Communication Bus (Transmit Error)	Transmitting error detected to TCM for specified time.	1 driving cycle	–
P1777		TCM Lost Communication with ECM (Reception Error)	Receiving error from ECM detected to TCM for specified time continuously.	1 driving cycle	–
P1887	85	T/F Output Speed Circuit Malfunction	No sensor signal is detected although output speed sensor signal is inputted.	1 driving cycle	1 driving cycle
P1895	27	Torque Control Signal Malfunction	Voltage of torque reduction signal circuit terminal is low although TCM does not require ECM to reduce engine torque.	–	1 driving cycle
P2769	26	Torque Converter Clutch Circuit Low	Voltage of TCC solenoid terminal is low although TCM is commanding TCC solenoid to turn ON.	1 driving cycle	1 driving cycle
P2770	25	Torque Converter Clutch Circuit High	Voltage of TCC solenoid terminal is high although TCM is commanding TCC solenoid to turn OFF.	1 driving cycle	1 driving cycle

NOTE:

***1: TCM does not desire turning on malfunction indicator lamp to ECM but DTC is stored in TCM memory.**

***2: "Transmission Warning Light" does not light although DTC is detected and stored.**

DTC Check

NOTE:

For M13 engine model with VVT, the MIL is turned on when the ECM and/or TCM detect malfunction(s). Each control module stores diagnostic information as the diagnostic trouble code (DTC) in its memory and outputs the DTC to the scan tool. Therefore, check both of the control modules for any DTC with the scan tool because the DTC stored in ECM and TCM is not read and displayed at a time. However, each of the control modules needs not to be checked with the generic scan tool because the DTC stored in ECM and TCM is read and displayed at a time.

Automatic transmission DTC can be checked using any one of the following 2 methods.

Reading DTC using SUZUKI scan tool

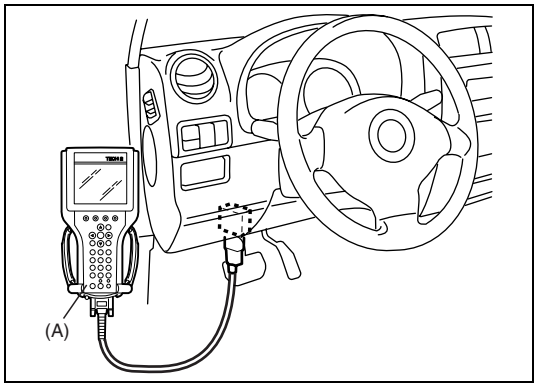

1) Turn ignition switch OFF.
2) Connect SUZUKI scan tool to data link connector (DLC).

Special tool
(A): SUZUKI scan tool

3) Read DTC according to instructions displayed on SUZUKI scan tool and write it down. Refer to SUZUKI scan tool operator's manual for further details.
4) After completing the check, turn ignition switch OFF and disconnect SUZUKI scan tool from data link connector (DLC).

Reading DTC using transmission warning light

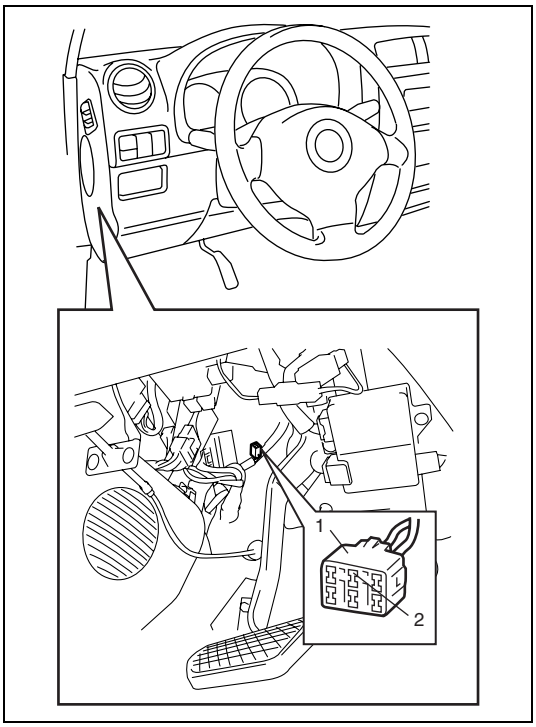

1) Turn ignition switch OFF.
2) Using service wire, connect diagnosis switch terminal (2) of monitor connector (1) to body ground.
3) Turn ignition switch ON.
4) Read flashing pattern of transmission warning light which represents DTC as shown in example below and write it down.

Example: Shift solenoid "A" control circuit high (DTC 21)

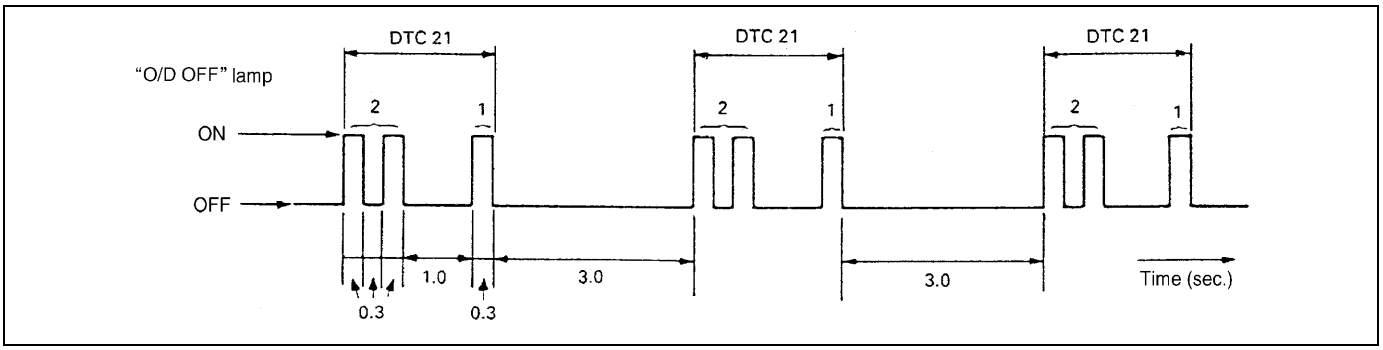

5) After completing the check, turn ignition switch OFF and disconnect service wire from monitor connector.

DTC Clearance

Automatic transmission DTC can be cleared using any one of the following 2 methods.

NOTE:

DTC and freeze frame data stored in TCM memory are also cleared in following cases. Be careful not to clear them before keeping their record.

- **When power to TCM is cut off (by disconnecting battery cable, removing fuse or disconnecting TCM connector).**
- **When the same malfunction (DTC) is not detected again during 40 engine warm-up cycles.**

DTC clearance using SUZUKI scan tool

1) Turn ignition switch OFF.

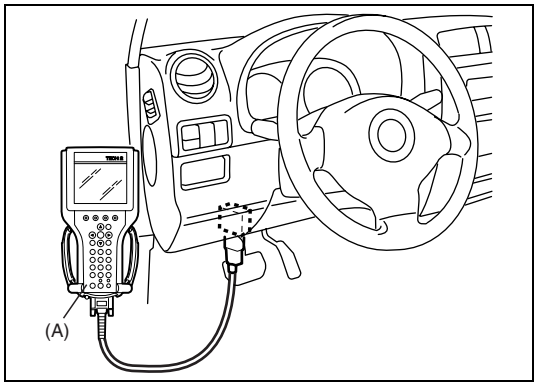

2) Connect SUZUKI scan tool to data link connector (DLC) (1).

Special tool
(A): SUZUKI scan tool

3) Clear DTC according to instructions displayed on SUZUKI scan tool. Refer to SUZUKI scan tool operator's manual for further details.
4) After completing the clearance, turn ignition switch OFF and disconnected SUZUKI scan tool from data link connector (DLC).

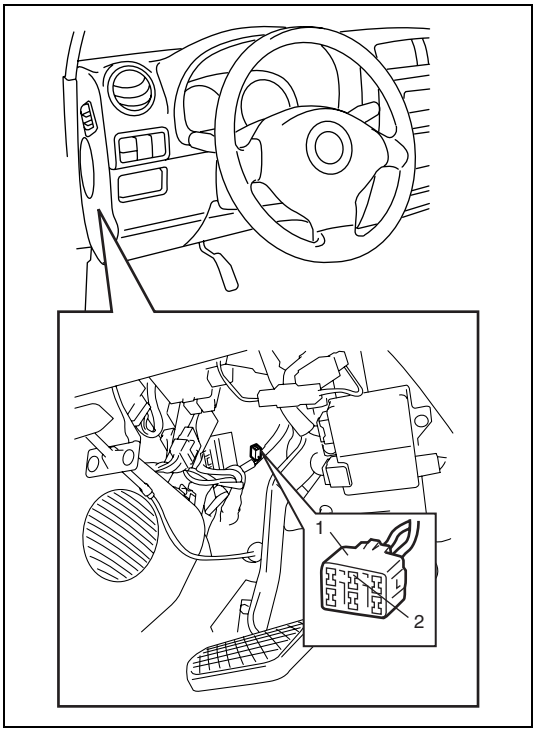

DTC clearance using monitor connector

1) Turn ignition switch ON.
2) After 6 seconds or more, repeat connecting and disconnecting diagnosis switch terminal (2) and body ground of monitor connector (1) 5 times at about 1 second interval within 10 seconds, using service wire.
3) Check TCM that no malfunction DTC remains in memory of it.

Fail Safe Table

This function is provided by the safe mechanism that assures safe driveability even when the solenoid valve, sensor or its circuit fails.
The table below shows the fail safe function for each fail condition of sensor, solenoid, TCM or its circuit.

DTC No.		Trouble Area	Fail Safe Operation
Type 1	Type 2		
P0705	34	Transmission Range Sensor Circuit Malfunction (PRNDL Input)	• Selected range is set in priority order shown below. D>2>L>R>N>P • Lock-up function is inhibited to operate. • Reverse control operation, which inhibit reverse driving at “R” range while vehicle runs forward more than 11 km/h (7 mile/h), is inhibited. • Learning control is inhibited.
P0707		Transmission Range Sensor Circuit Low	• Range is assumed to be “D” range. • Lock-up function is inhibited to operate. • Reverse control operation is inhibited. • Learning control is inhibited.
P0712	38	Transmission Fluid Temperature Sensor “A” Circuit Low	• A/T fluid temperature is assumed to be 200 °C (392 °F). • Upshifting to 4th gear is inhibited. • Lock-up function is inhibited to operate. • Garage shift control operation, which controls line pressure at shifting “N” to “R” or “D” range, is inhibited. • Learning control is inhibited.
P0713	36	Transmission Fluid Temperature Sensor “A” Circuit High	
P0717	14	Input / Turbine Speed Sensor Circuit No Signal	• Lock-up function is inhibited to operate. • Line pressure control at gear shifting is inhibited. • Upshifting to 4th gear is inhibited. • Torque reducing request to ECM (torque reduction control) is inhibited. • Garage shift control operation is inhibited. • Learning control is inhibited.
P0722	31	Output Speed Sensor Circuit No Signal	• Vehicle speed which is calculated by input shaft speed sensor signal is used for gear shifting control instead of vehicle speed calculated by output shaft speed sensor signal. • Upshifting to 4th gear is inhibited. • Lock-up function is inhibited to operate. • Line pressure control at gear shifting is inhibited. • Torque reducing request to ECM (torque reduction control) is inhibited. • Garage shift control operation is inhibited. • Learning control is inhibited.

DTC No.		Trouble Area	Fail Safe Operation
Type 1	Type 2		
P0727	35	Engine Speed Input Circuit No Signal	• Lock-up function is inhibited to operate. • Line pressure control at gear shifting is inhibited. • Upshifting to 4th gear is inhibited. • Torque reducing request to ECM (torque reduction control) is inhibited. • Garage shift control operation is inhibited. • Learning control is inhibited. • Engine revolution is assumed to be 0 RPM.
P0787	13	Shift / Timing Solenoid Control Circuit Low	• Power supply for all solenoid valves is cut. • Gear position is fixed according to select lever position as shown in the following R: Reverse D: 3rd 3: 3rd L: 3rd • Lock-up function is inhibited to operate. • Line pressure control is inhibited to operate.
P0788		Shift / Timing Solenoid Control Circuit High	
P0962	41	Pressure Control Solenoid “A” Control Circuit Low	• Power supply for all solenoid valves is cut. • Gear position is fixed according to select lever position as shown in the following R: Reverse D: 3rd 3: 3rd L: 3rd • Lock-up function is inhibited to operate. • Line pressure control is inhibited to operate.
P0963	42	Pressure Control Solenoid “A” Control Circuit High	
P0973	22	Shift Solenoid “A” Control Circuit Low	• Power supply for all solenoid valves is cut. • Gear position is fixed according to select lever position as shown in the following R: Reverse D: 3rd 3: 3rd L: 3rd • Lock-up function is inhibited to operate. • Line pressure control at gear shifting is inhibited to operate.
P0974	21	Shift Solenoid “A” Control Circuit High	
P0976	24	Shift Solenoid “B” Control Circuit Low	
P0977	23	Shift Solenoid “B” Control Circuit High	
P1702	52	Internal Control Module Memory Check Sum Error	• Power supply for all solenoid valves is cut. • Gear position is fixed according to select lever position as shown in the following R: Reverse D: 3rd 3: 3rd L: 3rd • Lock-up function is inhibited to operate. • Line pressure control is inhibited to operate.

DTC No.		Trouble Area	Fail Safe Operation
Type 1	Type 2		
P1703	86	CAN Invalid Data from other ECU	In case of throttle position signal malfunction: • Throttle opening used for line pressure control is assumed to be 100%. • Throttle opening used for gear shifting control is assumed to be 0%. • Upshifting to 4th gear is inhibited. • Lock-up function is inhibited to operate. • Learning control is inhibited. In case of engine coolant temperature signal malfunction: • After 15 minutes passing from malfunction detection, engine coolant temperature is assumed to be 90 °C (194 °F). In case of engine revolution signal malfunction: • Engine revolution is assumed to be 0 RPM. • Upshifting to 4th gear is inhibited. • Garage shift control operation is inhibited. • Line pressure control at gear shifting is inhibited. • Torque reducing request to ECM (torque reduction control) is inhibited. • Learning control is inhibited. In case of engine torque signal malfunction: • Line pressure control at gear shifting is inhibited. • Torque reducing request to ECM (torque reduction control) is inhibited. • Upshifting to 4th gear is inhibited. • Learning control is inhibited.
P1705	51	Engine Coolant Temperature Signal Circuit Malfunction	After 15 minutes passing from malfunction detection, engine coolant temperature is assumed to be 90 °C (194 °F).
P1723	87	Range Select Switch Malfunction	“3” position switch is assumed to be OFF.
P1724	33	Throttle Position Signal Input Circuit Low	• Throttle opening used for line pressure control is assumed to be 100%. • Throttle opening used for gear shifting control is assumed to be 0%. • Upshifting to 4th gear is inhibited. • Lock-up function is inhibited to operate. • Garage shift control operation is inhibited. • Learning control is inhibited.
P1725	32	Throttle Position Signal Input Circuit High	
P1730	64	Engine Torque Signal Circuit Malfunction	• Engine torque is assumed to be that of last value before detecting malfunction. • Line pressure control at gear shifting is inhibited. • Torque reducing request to ECM (torque reduction control) is inhibited. • Upshifting to 4th gear is inhibited. • Learning control is inhibited.
P1735	56	Air Conditioner Signal Circuit Malfunction	Air conditional signal is assumed to be OFF.

DTC No.		Trouble Area	Fail Safe Operation
Type 1	Type 2		
P1774	76	Control Module Communication Bus Off	• Throttle opening used for line pressure control is assumed to be 100%. • Throttle opening used for gear shifting control is assumed to be 0%. • Engine revolution is assumed to be 0 RPM. • After 15 minutes passing from ignition switch turned ON, engine coolant temperature is assumed to be 90 °C (194 °F). • Upshifting to 4th gear is inhibited. • Lock-up function is inhibited to operate. • Line pressure control at gear shifting is inhibited. • Torque reducing request to ECM (torque reduction control) is inhibited. • Garage shift control operation is inhibited. • Learning control is inhibited.
P1777		TCM Lost Communication with ECM (Reception Error)	
P1895	27	Torque Control Signal Malfunction	• Torque reducing request to ECM (torque reduction control) is inhibited.
P2769	26	Torque Converter Clutch Circuit Low	• Lock-up function is inhibited to operate. • Upshifting to 4th gear is inhibited when A/T fluid temperature is more than 150 °C (302 °F).
P2770	25	Torque Converter Clutch Circuit High	• Lock-up function is inhibited to operate. • Upshifting to 4th gear is inhibited when A/T fluid temperature is more than 150 °C (302 °F). • Vehicle speed is slower than 15 km/h (9 mile/h), gear position is fixed in 1st gear for prevention of engine stall.

Visual Inspection

Visually check the following parts and systems.

INSPECTION ITEM	REFERRING SECTION
• A/T fluid ----- level, leakage, color	Section 0B
• A/T fluid hoses ----- disconnection, looseness, deterioration	Section 7B
• Throttle cable ----- play (under warm engine), installation	Section 6E1
• A/T select cable ----- installation	Section 7B
• Engine oil ----- level, leakage	Section 0B
• Engine coolant ----- level, leakage	Section 0B
• Engine mountings ----- play, looseness, damage	Section 6A1
• Suspension ----- play, looseness	Section 3
• Drive shafts ----- damage	Section 4A
• Battery ----- indicator condition, corrosion of terminal	
• Connectors of electric wire harness ----- disconnection, friction	Section 6E1
• Fuses ----- burning	Section 8
• Parts ----- installation, damage	
• Bolts ----- looseness	
• Other parts that can be checked visually	
Also check the following items at engine start, if possible.	
• Transmission warning light ----- Operation	
• Malfunction indicator lamp ----- Operation	Section 6E1
• Charge warning lamp ----- Operation	Section 6H
• Engine oil pressure warning lamp ----- Operation	Section 8 (Section 6A1 for pressure check)
• Engine coolant temp. meter ----- Operation	
• Other parts that can be checked visually	

Automatic Transmission Basic Check

This check is important for troubleshooting when TCM has detected no DTC and no abnormality has been noted in visual inspection. Follow the flow table carefully.

Step	Action	Yes	No
1	Was “Automatic Transmission Diagnostic Flow Table” preformed?	Go to Step 2.	Go to “Automatic Transmission Diagnostic Flow Table”.
2	Perform “Road Test” in this section. Is it OK?	Go to Step 3.	Proceed to “Troubleshooting” in “Road Test”.
3	Perform “Manual Road Test” in this section. Is it OK?	Go to Step 4.	Proceed to “Troubleshooting” in “Manual Road Test”.
4	Perform “Engine Brake Test” in this section. Is it OK?	Go to Step 5.	Proceed to “Troubleshooting” in “Engine Brake Test”.
5	Perform “Stall Test” in this section. Is it OK?	Go to Step 6.	Proceed to “Troubleshooting” in “Stall Test”.
6	Perform “Time Lag Test” in this section. Is it OK?	Go to Step 7.	Proceed to “Troubleshooting” in “Time Lag Test”.
7	Perform “Line Pressure Test” in this section. Is it OK?	Go to Step 8.	Proceed to “Troubleshooting” in “Line Pressure Test”.
8	Proceed to “Trouble Diagnosis Table-1” in this section. Is trouble identified?	Repair or replace faulty parts.	Go to Step 9.
9	Proceed to “Trouble Diagnosis Table-2” in this section. Is trouble identified?	Repair or replace faulty parts.	Proceed to “Trouble Diagnosis Table-3” in this section.

Trouble Diagnosis Table

Trouble diagnosis table-1

Electrical Repair

Condition	Possible Cause	Correction
Excessive shift shock	Shift solenoid valve-A and/or -B circuit faulty	Inspect circuit for open, short and intermittent. If NG, repair.
	Pressure control solenoid valve circuit faulty	
	(Only when N → D or 3 ↔ 4 shifting) Timing solenoid valve circuit faulty	
	Output shaft speed sensor circuit faulty	
	Input shaft speed sensor circuit faulty	
	Transmission fluid temperature sensor circuit faulty	
	CAN communication circuit faulty (M13 engine model with VVT)	
	Throttle position signal circuit faulty (M13 engine model without VVT)	Inspect circuit for open, short and intermittent referring to Section 6. If NG, repair.
	Engine speed signal circuit faulty (M13 engine model without VVT)	
	Engine torque signal circuit faulty (M13 engine model without VVT)	
	Torque reduction request signal circuit faulty (M13 engine model without VVT)	
	Throttle position sensor circuit faulty	
	Crank position sensor circuit faulty	
	TCM	Substitute a known-good TCM and recheck.
	ECM	Substitute a known-good ECM and recheck.
No gear shift as 3rd gear	Shift solenoid valve-A and/or -B circuit faulty	Inspect circuit for open, short and intermittent. If NG, repair.
	Pressure control solenoid valve circuit faulty	
	Timing solenoid valve circuit faulty	
	TCM	Substitute a known-good TCM and recheck.
Poor 1 → 2 shift	Shift solenoid valve-B circuit faulty	Inspect circuit for open, short and intermittent. If NG, repair.
	Output shaft speed sensor circuit faulty	
	Transmission range sensor circuit faulty	
	CAN communication circuit faulty (M13 engine model with VVT)	
	Throttle position signal circuit faulty (M13 engine model without VVT)	
	Throttle position sensor circuit faulty	Inspect circuit for open, short and intermittent referring to Section 6. If NG, repair.
	TCM	Substitute a known-good TCM and recheck.
	ECM	Substitute a known-good ECM and recheck.

Condition	Possible Cause	Correction
Poor 2 → 3 shift	Shift solenoid valve-A circuit faulty	Inspect circuit for open, short and intermittent. If NG, repair.
	Output shaft speed sensor circuit faulty	
	Transmission range sensor circuit faulty	
	CAN communication circuit faulty (M13 engine model with VVT)	
	Throttle position signal circuit faulty (M13 engine model without VVT)	
	Throttle position sensor circuit faulty	Inspect circuit for open, short and intermittent referring to Section 6. If NG, repair.
	TCM	Substitute a known-good TCM and recheck.
	ECM	Substitute a known-good ECM and recheck.
Poor 3 → 4 shift	Shift solenoid valve-B circuit faulty	Inspect circuit for open, short and intermittent. If NG, repair.
	Pressure control solenoid valve circuit faulty	
	Timing solenoid valve circuit faulty	
	Output shaft speed sensor circuit faulty	
	Input shaft speed sensor circuit faulty	
	Transmission range sensor circuit faulty	
	Transmission fluid temperature sensor circuit faulty	
	CAN communication circuit faulty (M13 engine model with VVT)	
	Throttle position signal circuit faulty (M13 engine model without VVT)	
	Engine coolant temperature signal circuit faulty (M13 engine model without VVT)	
	Engine speed signal circuit faulty (M13 engine model without VVT)	
	Throttle position sensor circuit faulty	Inspect circuit for open, short and intermittent referring to Section 6. If NG, repair.
	Engine coolant temperature sensor circuit faulty	
	Crank position sensor circuit faulty	
	“3” position switch circuit faulty	Refer to “Diagnostic Flow Table A-1” in this section.
	TCM	Substitute a known-good TCM and recheck.
	ECM	Substitute a known-good ECM and recheck.

Condition	Possible Cause	Correction
Poor 4 → 3 shift	Shift solenoid valve-B circuit faulty	Inspect circuit for open, short and intermittent. If NG, repair.
	Pressure control solenoid valve circuit faulty	
	Timing solenoid valve circuit faulty	
	Output shaft speed sensor circuit faulty	
	Input shaft speed sensor circuit faulty	
	CAN communication circuit faulty (M13 engine model with VVT)	
	Throttle position signal circuit faulty (M13 engine model without VVT)	
	Throttle position sensor circuit faulty	Inspect circuit for open, short and intermittent referring to Section 6. If NG, repair.
	O/D off switch circuit faulty	Refer to “Diagnostic Flow Table A-1” in this section.
	TCM	Substitute a known-good TCM and recheck.
	ECM	Substitute a known-good ECM and recheck.
Poor 3 → 2 shift	Shift solenoid valve-A circuit faulty	Inspect circuit for open, short and intermittent. If NG, repair.
	Output shaft speed sensor circuit faulty	
	CAN communication circuit faulty (M13 engine model with VVT)	
	Throttle position signal circuit faulty (M13 engine model without VVT)	
	Throttle position sensor circuit faulty	Inspect circuit for open, short and intermittent referring to Section 6. If NG, repair.
	TCM	Substitute a known-good TCM and recheck.
	ECM	Substitute a known-good ECM and recheck.
Poor 2 → 1 shift	Shift solenoid valve-B circuit faulty	Inspect circuit for open, short and intermittent. If NG, repair.
	Output shaft speed sensor circuit faulty	
	CAN communication circuit faulty (M13 engine model with VVT)	
	Throttle position signal circuit faulty (M13 engine model without VVT)	
	Throttle position sensor circuit faulty	Inspect circuit for open, short and intermittent referring to Section 6. If NG, repair.
	TCM	Substitute a known-good TCM and recheck.
	ECM	Substitute a known-good ECM and recheck.
Incorrect gear shift point	Output shaft speed sensor circuit faulty	Inspect circuit for open, short and intermittent. If NG, repair.
	Pressure control solenoid valve circuit faulty	
	CAN communication circuit faulty (M13 engine model with VVT)	
	Throttle position signal circuit faulty (M13 engine model without VVT)	
	Throttle position sensor circuit faulty	Inspect circuit for open, short and intermittent referring to Section 6. If NG, repair.
	TCM	Substitute a known-good TCM and recheck.
	ECM	Substitute a known-good ECM and recheck.

Condition	Possible Cause	Correction
Non operate TCC (lock-up) system	TCC solenoid valve-B circuit faulty	Inspect circuit for open, short and intermittent. If NG, repair.
	Shift solenoid valve-A and/or -B circuit faulty	
	Pressure control solenoid valve circuit faulty	
	Output shaft speed sensor circuit faulty	
	Input shaft speed sensor circuit faulty	
	Transmission range sensor circuit faulty	
	Transmission fluid temperature sensor circuit faulty	
	CAN communication circuit faulty (M13 engine model with VVT)	
	Engine coolant temperature signal circuit faulty (M13 engine model without VVT)	
	Throttle position signal circuit faulty (M13 engine model without VVT)	
	Brake light switch circuit faulty	Refer to “Diagnostic Flow Table A-2” in this section.
	Throttle position sensor circuit faulty	Inspect circuit for open, short and intermittent referring to Section 6. If NG, repair.
	Engine coolant temperature sensor circuit faulty	
	TCM	Substitute a known-good TCM and recheck.
	ECM	Substitute a known-good ECM and recheck.
Higher or lower stall speed	Pressure control solenoid valve circuit faulty	Inspect circuit for open, short and intermittent. If NG, repair.
	TCM	Substitute a known-good TCM and recheck.
Excessive “N”→“D” or “N”→“R” time lag	Pressure control solenoid valve circuit faulty	Inspect circuit for open, short and intermittent. if NG, repair
	Transmission fluid temperature sensor circuit faulty	
	TCM	Substitute a known-good TCM and recheck.
Higher or lower line pressure	Pressure control solenoid valve circuit faulty	Inspect circuit for open, short and intermittent. If NG, repair.
	TCM	Substitute a known-good TCM and recheck.

Trouble diagnosis table-2

On-vehicle Repair

Condition	Possible Cause	Correction
Unable to run in all range	Faulty valve body component	Replace valve body assembly
Excessive shift shock	Engine abnormal condition	Inspect and repair engine
	Malfunction of shift solenoid valve-A and/or -B	Inspect. If NG, replace
	Malfunction of output shaft speed sensor	
	Malfunction of input shaft speed sensor	
	Malfunction of transmission range sensor	
	Malfunction of Transmission fluid temperature sensor	
	(Only when N → D or 3 ↔ 4 shifting) Malfunction of timing solenoid valve	
	Malfunction of pressure control solenoid valve	Inspect. If NG, replace valve body assembly.
	(Except N → D or N → R shifting) Malfunction of brake light switch	Inspect referring to Section 5. If NG, replace.
	Malfunction of crank position sensor	Inspect referring to Section 6E1. If NG, replace.
	Malfunction of throttle position sensor	
	Faulty valve body component	Replace valve body assembly.
Poor 1 → 2 shift	Malfunction of shift solenoid valve-B	Inspect. If NG, replace.
	Malfunction of output shaft speed sensor	
	Malfunction of transmission range sensor	
	Malfunction of throttle position sensor	Inspect referring to Section 6E1. If NG, replace.
	Faulty valve body component	Replace valve body assembly.
Poor 2 → 3 shift	Malfunction of shift solenoid valve-A	Inspect. If NG, replace.
	Malfunction of output shaft speed sensor	
	Malfunction of transmission range sensor	
	Malfunction of throttle position sensor	Inspect referring to Section 6E1. If NG, replace.
	Faulty valve body component	Replace valve body assembly.
Poor 3 → 4 shift	Malfunction of shift solenoid valve-B	Inspect. If NG, replace.
	Malfunction of timing solenoid valve	
	Malfunction of output shaft speed sensor	
	Malfunction of input shaft speed sensor	
	Malfunction of transmission range sensor	
	Malfunction of Transmission fluid temperature sensor	
	Malfunction of “3” position switch	
	Malfunction of engine coolant temperature sensor	Inspect referring to Section 6E1. If NG, replace.
	Malfunction of throttle position sensor	
	Malfunction of pressure control solenoid valve	Inspect. If NG, replace valve body assembly.
	Faulty valve body component	Replace valve body assembly.

Condition	Possible Cause	Correction
Poor 4 → 3 shift	Malfunction of shift solenoid valve-B	Inspect. If NG, replace.
	Malfunction of timing solenoid valve	
	Malfunction of output shaft speed sensor	
	Malfunction of input shaft speed sensor	
	Malfunction of "3" position switch	
	Malfunction of throttle position sensor	Inspect referring to Section 6E1. If NG, replace.
	Malfunction of pressure control solenoid valve	Inspect. If NG, replace valve body assembly.
	Faulty valve body component	Replace valve body assembly.
Poor 3 → 2 shift	Malfunction of shift solenoid valve-A	Inspect. If NG, replace.
	Malfunction of output shaft speed sensor	
	Malfunction of throttle position sensor	Inspect referring to Section 6E1. If NG, replace.
	Faulty valve body component	Replace valve body assembly.
Poor 2 → 1 shift	Malfunction of shift solenoid valve-B	Inspect. If NG, replace.
	Malfunction of output shaft speed sensor	
	Malfunction of throttle position sensor	Inspect referring to Section 6E1. If NG, replace.
	Faulty valve body component	Replace valve body assembly.
Incorrect shift point	Engine abnormal condition	Inspect and repair engine
	Malfunction of output shaft speed sensor	Inspect. If NG, replace.
	Malfunction of throttle position sensor	Inspect referring to Section 6E1. If NG, replace.
Non operate TCC (lock-up) system	Malfunction of TCC solenoid valve	Inspect. If NG, replace.
	Malfunction of shaft solenoid valve-A and/or- B	
	Malfunction of output shaft speed sensor	
	Malfunction of input shaft speed sensor	
	Malfunction of transmission range sensor	
	Malfunction of transmission fluid temperature sensor	
	Malfunction of pressure control solenoid valve	Inspect. If NG, replace valve body assembly.
	Malfunction of brake light switch	Inspect referring to Section 5. If NG, replace.
	Malfunction of throttle position sensor	Inspect referring to Section 6E1. If NG, replace.
	Malfunction of engine coolant temperature sensor	
	Faulty valve body component	Replace valve body assembly.
Excessive "N" → "D" or "N" → "R" time lag	Malfunction of transmission fluid temperature sensor	Inspect. If NG, replace.
	Pressure control solenoid valve circuit faulty	Inspect. If NG, replace valve body assembly.
	Clogged oil strainer	Replace.
	Faulty valve body component	Replace valve body assembly.

Trouble diagnosis table-3

Off-vehicle Repair

Condition	Possible Cause	Correction
Unable to run in all range	Faulty oil pump	Inspect. If NG, replace.
	Seized or broken planetary gear	
	Faulty one-way No.2 clutch	
	Damaged drive plate	
	Faulty forward clutch	
	Faulty reverse clutch	
	Faulty 1st and reverse brake	
	Faulty torque converter	Replace
Excessive “N” → “D” shift shock	Faulty forward clutch	Inspect. If NG, replace.
Excessive “N” → “R” shift shock	Faulty reverse clutch	Inspect. If NG, replace.
	Faulty 1st and reverse brake	
Poor 1 → 2 shift, excessive shock or slippage	Faulty 2nd brake	Inspect. If NG, replace.
	Faulty one-way No.1 clutch	
Poor 2 → 3 shift, excessive shock or slippage	Faulty direct clutch	Inspect. If NG, replace.
Poor 3 ↔ 4 shift, excessive shock or slippage	Faulty forward clutch	Inspect. If NG, replace.
	Faulty O/D and 2nd coast brake	
Poor 3 → 2 shift, excessive shock or slippage	Faulty direct clutch	Inspect. If NG, replace.
	Faulty one-way No.1 clutch	
Poor 2 → 1 shift, excessive shock or slippage	Faulty 2nd brake	Inspect. If NG, replace.
	Faulty one-way No.2 clutch	
Non operate TCC (lock-up) system	Faulty torque converter	Replace.
Excessive “N” → “D” time lag	Faulty oil pump	Inspect. If NG, replace.
	Faulty forward clutch	
	Faulty one-way No.2 clutch	
	Leakage from “D” range fluid pressure circuit	Overhaul or replace valve body assembly.
Excessive “N” → “R” time lag	Faulty oil pump	Inspect. If NG, replace.
	Faulty reverse clutch	
	Faulty 1st and reverse brake	
	Leakage from “R” range fluid pressure circuit	Overhaul or replace valve body assembly.
Poor engine brake in downshift to “2” range	Faulty O/D and 2nd coast brake	Inspect. If NG, replace.
Poor engine brake in downshift to “L” range	Faulty 1st and reverse brake.	Inspect. If NG, replace.

Road Test

This test is to check if upshift, downshift and lock-up take place at specified speeds while actually driving vehicle on a level road.

WARNING:
- **Carry out test in very little traffic area to prevent an accident.**
- **Test requires 2 persons, a driver and a tester.**

1) Warm up engine.
2) With engine running at idle, shift selector lever to “D” range.
3) Accelerate vehicle speed by depressing accelerator pedal gradually.
4) While driving in “D” range, check if gear shift and lock-up occur properly as specified in “Automatic Gear Shift Table” in this section.

Troubleshooting

Condition	Possible Cause	Correction
Unable to run in all range	Faulty valve body component	Replace valve body assembly
	Faulty oil pump	Inspect. If NG, replace.
	Seized or broken planetary gear	
	Faulty one-way No.2 clutch	
	Faulty forward clutch	
	Faulty reverse clutch	
	Faulty 1st and reverse brake	
	Damaged drive plate	
	Faulty torque converter	Replace.
No gear shift as 3rd gear	Malfunction of shift solenoid valve-A and/or- B	Inspect. If NG, replace.
	Malfunction of timing solenoid valve	
	Malfunction of pressure control solenoid valve	Inspect. If NG, replace valve body assembly.
1 → 2 upshift fails to occur	Malfunction of shift solenoid valve-B	Inspect. If NG, replace.
	Malfunction of output shaft speed sensor	
	Malfunction of throttle position sensor	
	Malfunction of transmission range sensor	
	Faulty valve body component	Replace valve body assembly
	Faulty 2nd brake	Inspect. If NG, replace.
	Faulty one-way No.1 clutch	
2 → 3 upshift fails to occur	Malfunction of shift solenoid valve-A	Inspect. If NG, replace.
	Malfunction of output shaft speed sensor	
	Malfunction of throttle position sensor	
	Malfunction of transmission range sensor	
	Faulty valve body component	Replace valve body assembly.
	Faulty direct clutch	Inspect. If NG, replace.

Condition	Possible Cause	Correction
3 → 4 upshift fails to occur	Malfunction of shift solenoid valve-B	Inspect. If NG, replace.
	Malfunction of “3” position switch	
	Malfunction of engine coolant temperature sensor	
	Malfunction of output shaft speed sensor	
	Malfunction of input shaft speed sensor	
	Malfunction of throttle position sensor	
	Malfunction of transmission range sensor	
	Malfunction of crankshaft position sensor	
	Malfunction of timing solenoid valve	
	Malfunction of transmission fluid temperature sensor	
	Malfunction of pressure control solenoid valve	Inspect. If NG, replace valve body assembly.
	Faulty valve body component	Replace valve body assembly.
	Faulty O/D and 2nd coast brake	Inspect. If NG, replace.
4 → 3 downshift fails to occur	Malfunction of shift solenoid valve-A	Inspect. If NG, replace.
	Malfunction of “3” position switch	
	Malfunction of output shaft speed sensor	
	Malfunction of input shaft speed sensor	
	Malfunction of throttle position sensor	
	Malfunction of timing solenoid valve	
	Malfunction of pressure control solenoid valve	Inspect. If NG, replace valve body assembly.
	Faulty valve body component	Replace valve body assembly.
	Faulty forward clutch	Inspect. If NG, replace.
3 → 2 downshift fails to occur	Malfunction of shift solenoid valve-A	Inspect. If NG, replace.
	Malfunction of output shaft speed sensor	
	Malfunction of throttle position sensor	
	Faulty valve body component	Replace valve body assembly.
	Faulty one-way No.1 clutch	Inspect. If NG, replace.
2 → 1 downshift fails to occur	Malfunction of shift solenoid valve-B	Inspect. If NG, replace.
	Malfunction of output shaft speed sensor	
	Malfunction of throttle position sensor	
	Faulty valve body component	Replace valve body assembly.
	Faulty one-way No.2 clutch	Inspect. If NG, replace.
Gear shift point is incorrect	Abnormal engine condition	Inspect and repair engine.
	Malfunction of output shaft speed sensor	Inspect. If NG, replace.
	Malfunction of throttle position sensor	
	Malfunction of pressure control solenoid valve	Inspect. If NG, replace valve body assembly.

Condition	Possible Cause	Correction
TCC (lock-up) function does not operate	Malfunction of TCC solenoid valve	Inspect. If NG, replace.
	Malfunction of shift solenoid valve-A and/or- B	
	Malfunction of brake light switch	
	Malfunction of engine coolant temperature sensor	
	Malfunction of output shaft speed sensor	
	Malfunction of input shaft speed sensor	
	Malfunction of throttle position sensor	
	Malfunction of transmission range sensor	
	Malfunction of transmission fluid temperature sensor	
	Malfunction of pressure control solenoid valve	Inspect. If NG, replace valve body assembly.
	Faulty valve body component	Replace valve body assembly.
	Faulty torque converter	Replace.

Manual Road Test

This test checks the gears being used in “L”, “2” or “D” range when driven with unoperated gear shift control system. Test drive vehicle on a level road.

NOTE:

Before this test, check diagnostic trouble code (DTC).

1) With select lever in “P”, start engine and warm it up.

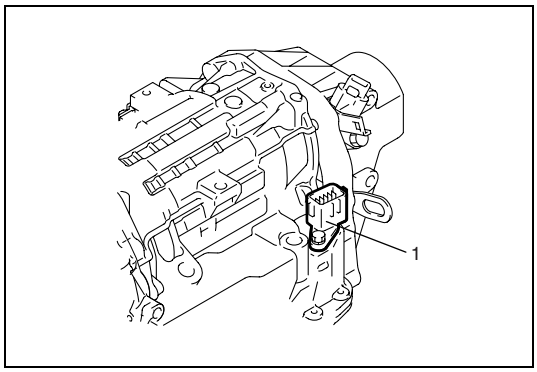

2) After warming up engine, turn ignition switch OFF and disconnect valve body harness connector (1).

3) With select lever in “L” range, drive vehicle, keep engine speed at 1000 r/min. and check that 3rd gear is being used through vehicle speed referring to table shown below.

Vehicle speed per 1000 rpm in engine speed (V1000 table, reference)

Gear position	Vehicle speed
1st	8.1 km/h (5.0 mile/h)
2nd	14.9 km/h (9.3 mile/h)
3rd	23.4 km/h (14.5 mile/h)
4th	33.5 km/h (20.8 mile/h)
Reverse	10.2 km/h (6.3 mile/h)

4) While vehicle is running, shift select lever to “2” range and check that 3rd gear is being used through vehicle speed.
5) While vehicle is running, shift select lever to “D” range and check that 3rd gear is being used through vehicle speed.
6) After above checks, stop vehicle then turn ignition switch OFF, and connect valve body harness connector.
7) Clear DTC.

Troubleshooting

Condition	Possible Cause	Correction
Operated gear is incorrect	Faulty valve body component	Replace valve body assembly.
	Faulty clutch or brake	Inspect clutch and brake. If any parts are faulty, replace them.

Engine Brake Test

WARNING:
Before test, make sure that there is no vehicle behind so as to prevent rear-end collision.

1) While driving vehicle in 3rd gear of “D” range, shift select lever down to “2” range and check if engine brake operates.
2) In the same way as in Step 1), check engine brake for operation when select lever is shifted down to “L” range.
3) Engine brake should operate in above test.

Troubleshooting

Condition	Possible Cause	Correction
Failure to operate when shifted down to “2” range	Faulty valve body component	Replace valve body assembly.
	Faulty O/D and 2nd coast brake	Inspect. If NG, replace.
Failure to operate when shifted down to “L” range	Faulty valve body component	Replace valve body assembly.
	Faulty 1st and reverse brake	Inspect. If NG, replace.

Stall Test

This test is to check overall performance of automatic transmission and engine by measuring stall speed at “D” and “R” ranges. Be sure to perform this test only when transmission fluid is at normal operating temperature and its level is between FULL and LOW marks.

CAUTION:
- **Do not run engine at stall more than 5 seconds continuously, or fluid temperature may rise excessively high.**
- **After performing stall test, be sure to leave engine running at idle for longer than 1 minute before another stall test.**

1) Apply parking brake and block wheels.
2) Install tachometer.
3) Start engine with select lever shifted to “P” range.
4) Depress brake pedal fully.
5) Shift select lever to “D” range and depress accelerator pedal fully while watching tachometer. Read engine rpm quickly when it has become constant (stall speed).
6) Release accelerator pedal immediately after stall speed is checked.
7) In the same way, check stall speed in “R” range.
8) Stall speed should be within following specification.

Engine stall speed
Standard: 2250 – 2550 rpm

Troubleshooting

Condition	Possible Cause	Correction
Lower than standard level in both “D” and “R” range	Engine output torque failure	Inspect and repair engine.
	Faulty one-way clutch of torque converter	Replace torque converter.
Higher than standard level in “D” range	Malfunction of pressure control solenoid valve (Low line pressure)	Inspect. If NG, replace valve body assembly.
	Faulty valve body component	Replace valve body assembly.
	Slippery forward clutch	Inspect. If NG, replace.
	Faulty one-way No.2 clutch	
	Leakage from “D” range fluid pressure circuit	Overhaul or replace valve body assembly.
Higher than standard level in “R” range	Malfunction of pressure control solenoid valve (Low line pressure)	Inspect. If NG, replace valve body assembly.
	Faulty valve body component	Replace valve body assembly.
	Slippery reverse clutch	Inspect. If NG, replace.
	Slippery 1st and reverse brake	
	Leakage from “R” range fluid pressure circuit	Overhaul or replace valve body assembly.
Higher than standard level in both “D” and “R” range	Malfunction of pressure control solenoid valve (Low line pressure)	Inspect. If NG, replace valve body assembly.
	Faulty valve body component	Replace valve body assembly.
	Clogged oil strainer	Replace.
	Faulty oil pump	Inspect. If NG, replace.
	Leakage from both “D” and “R” range fluid pressure circuit	Overhaul or replace valve body assembly.

Time Lag Test

This test is to check conditions of clutch, brake and fluid pressure. “Time lag” means time elapsed since selector lever is shifted with engine idling till shock is felt.

1) With chocks placed before and behind front and rear wheels respectively, depress brake pedal.
2) Start engine.
3) With stop watch ready, shift select lever from “N” to “D” range and measure time from that moment till shock is felt.
4) Similarly measure time lag by shifting select lever from “N” to “R” range.

Gear shifting time lag
“N” → “D”: Less than 0.7 sec.
“N” → “R”: Less than 1.2 sec.

NOTE:

- **When repeating this test, be sure to wait at least one minute after select lever is shifted back to “N” range.**
- **Engine should be warmed up fully for this test.**
- **Repeat test 3 times and take average of those data for final time lag data.**

Troubleshooting

Condition	Possible Cause	Correction
“N” → “D” time lag exceeds specification	Malfunction of transmission fluid temperature sensor	Inspect. If NG, replace.
	Malfunction of pressure control solenoid valve (Low line pressure)	Inspect. If NG, replace valve body assembly.
	Faulty valve body component	Replace valve body assembly.
	Clogged oil strainer	Replace.
	Faulty oil pump	Inspect. If NG, replace.
	Faulty forward clutch	
	Faulty one-way No.2 clutch	
	Leakage from “D” range fluid pressure circuit	Overhaul or replace valve body assembly.
“N” → “R” time lag exceeds specification	Malfunction of transmission fluid temperature sensor	Inspect. If NG, replace.
	Malfunction of pressure control solenoid valve (Low line pressure)	Inspect. If NG, replace valve body assembly.
	Faulty valve body component	Replace valve body assembly.
	Clogged oil strainer	Replace.
	Faulty oil pump	Inspect. If NG, replace.
	Faulty reverse clutch	
	Faulty 1st and reverse brake	
	Leakage from “R” range fluid pressure circuit	Overhaul or replace valve body assembly.

Line Pressure Test

Purpose of this test is to check operating conditions of each part by measuring fluid pressure in fluid pressure line.
Line pressure test requires following conditions.

- Automatic fluid is at normal operating temperature (70 – 80 °C / 158 – 176 °F).
- Fluid is replenished to proper level (between FULL and LOW on dipstick).
- Air conditioner switch is turned OFF.

1) Apply parking brake securely and place chocks against wheels.
2) Remove fluid pressure check hole plug bolt.

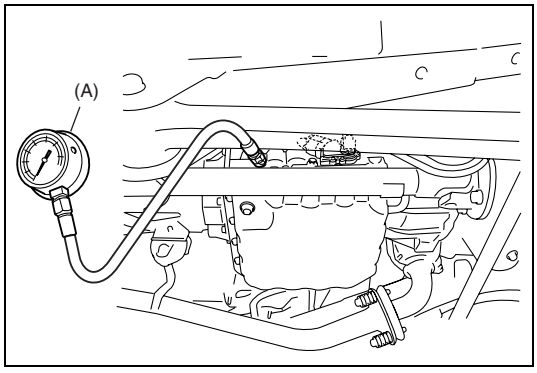

3) Attach oil pressure gauge to fluid pressure check hole in transmission case.

Special tool
(A): 09925-37811-001

CAUTION:
After attaching oil pressure gauge, check that no fluid leakage exists.

4) Depress foot brake fully, run engine at idle and stall then check fluid pressure in “D” or “R” range.

CAUTION:

- **Do not continue running engine at stall speed longer than 5 seconds.**
- **After performing line pressure test, be sure to leave engine running at idle for longer than one minute before performing another line pressure test.**

Automatic transmission line pressure

	“D” range	“R” range
At idle speed	**377 – 407 kPa 55 – 59 psi**	**613 – 683 kPa 89 – 99 psi**
At stall speed	**1213 – 1326 kPa 176 – 192 psi**	**1620 – 1779 kPa 235 – 258 psi**

Troubleshooting

Condition	Possible Cause	Correction
Higher than standard level in each range	Malfunction of pressure control solenoid valve (Low line pressure)	Inspect. If NG, replace valve body assembly.
	Faulty valve body component	Replace valve body assembly.
Lower than standard level in each range	Malfunction of pressure control solenoid valve (Low line pressure)	Inspect. If NG, replace valve body assembly.
	Faulty valve body component	Replace valve body assembly.
	Clogged oil strainer	Replace.
	Faulty oil pump	Inspect. If NG, replace.
	Leakage from both “D” and “R” range fluid pressure circuit	Overhaul or replace valve body assembly.
Lower than standard level only in “D” range	Leakage from “D” range fluid pressure circuit	Overhaul or replace valve body assembly.
Lower than standard level only in “R” range	Leakage from “R” range fluid pressure circuit	Overhaul or replace valve body assembly.

“P” Range Test

1) Stop vehicle on a slope of 5 degrees or more, shift select lever to “P” range and at the same time apply parking brake.
2) After stopping engine, depress brake pedal and release parking brake.
3) Then, release brake pedal gradually and check that vehicle remains stationary.
4) Depress brake pedal and shift select lever to “N” range.
5) Then, release brake pedal gradually and check that vehicle moves.

WARNING:
Before test, make sure no one is around vehicle or down on a slope and keep watchful for safety during test.

Troubleshooting

Condition	Possible Cause	Correction
Vehicle moves at “P” range or remains stationary at “N” range	Defective parking lock pawl or spring	Inspect. If NG, repair.

Diagnostic Flow Table A-1: No Gear Shift to 4th Gear

System Description

TCM does not shift to 4th gear under any of the following conditions.

- Engine coolant temperature is less than 50 °C (122 °F).
- A/T fluid temperature is less than 20 °C (68 °F).
- TCM detects the following DTCs. (4th gear prohibition DTCs)
  P0712 / P0713 / P0717 / P0722 / P0727 / P0787 / P0788 / P0962 / P0963 / P0973 / P0974 / P0976 / P0977 / P1702 / P1703 / P1724 / P1725 / P1730 / P1774 / P1777 / P1895

Troubleshooting

WARNING:

- **When performing a road test, select a place where there is no traffic or possibility of a traffic accident and be very careful during testing to avoid occurrence of an accident.**
- **Road test should be carried out with 2 persons, a driver and tester, on a level road.**

NOTE:

- **The terminal number outside ( ) shows M13 engine model with VVT.**
- **The terminal number in ( ) shows M13 engine model without VVT.**

Step	Action	Yes	No
1	Was “A/T System Check” performed?	Go to Step 2.	Go to “A/T System Check”.
2	Check DTC. Is DTC P0712, P0713, P0717, P0722, P0727, P0787, P0788, P0962, P0963, P0973, P0974, P0976, P0977, P1702, P1703, P1724, P1725, P1730, P1774, P1777 and/or P1895 detected?	Perform DTC flow table to repair and retry.	Go to Step 3.
3	Perform running test under the following conditions and measure voltage between terminal “E121-16” (or “E123-4”) of TCM connector and ground, terminal “E121-15” (or “E123-3”) of TCM connector and ground. • Engine coolant temperature is in normal operating temperature. • Select lever is in “D” range. • Drive vehicle with 4th gear condition referring to “Automatic Gear Shift Table” in this section. Do results satisfy the value as follows? Voltage between terminal “E121-16” (or “E123-4”) of TCM connector and ground: 0 – 1 V Voltage between terminal “E121-15” (or “E123-3”) of TCM connector and ground: 9 – 14 V	Faulty shift solenoid valve, circuit or transmission.	“BRN” circuit shorted to power circuit or open, or “BLK/YEL” circuit shorted to ground. If wire is OK, substitute a known-good TCM and recheck.

Diagnostic Flow Table A-2: No Lock-Up Occurs

System Description

TCM turns TCC solenoid OFF under any of the following conditions.

- Brake light switch is turned ON. (Brake pedal is depressed)
- Engine coolant temperature is less than 60 °C (140 °F).
- Throttle opening is as much as 0%.
- TCM detects the following DTCs.
  P0705 / P0707 / P0712 / P0713 / P0717 / P0722 / P0727 / P0787 / P0788 / P0962 / P0963 / P0973 / P0974 / P0976 / P0977 / P1702 / P1703 / P1724 / P1725 / P1774 / P1777 / P2769 / P2770

Troubleshooting

WARNING:

- **When performing a road test, select a place where there is no traffic or possibility of a traffic accident and be very careful during testing to avoid occurrence of an accident.**
- **Road test should be carried out with 2 persons, a driver and tester, on a level road.**

NOTE:

- **The terminal number outside ( ) shows M13 engine model with VVT.**
- **The terminal number in ( ) shows M13 engine model without VVT.**

Step	Action	Yes	No
1	Was “A/T System Check” performed?	Go to Step 2.	Go to “A/T System Check”.
2	Check DTC. Is DTC P0705, P0707, P0712, P0713, P0717, P0722, P0727, P0787, P0788, P0962, P0963, P0973, P0974, P0976, P0977, P1702, P1703, P1724, P1725, P1774, P1777, P2769 and/or P2770 detected?	Perform DTC flow table to repair and retry.	Go to Step 3.
3	Perform running test under the following conditions and measure voltage between terminal “E121-5” (or “E121-12”) of TCM connector and ground. • Engine coolant temperature is in normal operating temperature. • Select lever is in “D” range. • Brake pedal is released. • Drive vehicle with 4th gear and TCC ON condition referring to “Automatic Gear Shift Table” in this section. Is terminal voltage about 9 – 14 V?	Faulty TCC solenoid valve, circuit or transmission.	“BLK/YEL” circuit shorted to ground. If wire is OK, go to step 4.
4	Brake light switch signal inspection. With ignition switch ON, check voltage between terminal “E118-9” of ECM connector (or “E124-13” of TCM connector) and ground. Brake pedal is released: 0 – 1 V Brake pedal is depressed: 8 – 14 V Is result as specified?	Substitute a known-good TCM and recheck.	Mis-adjusted brake light switch, faulty brake light switch or its circuit. If OK, substitute a known-good TCM and recheck.

Diagnostic Flow Table A-3: Transmission Warning Light Circuit Check – Light Does Not Come "ON" at Ignition Switch ON (M13 Engine Model without VVT)

Wiring Diagram

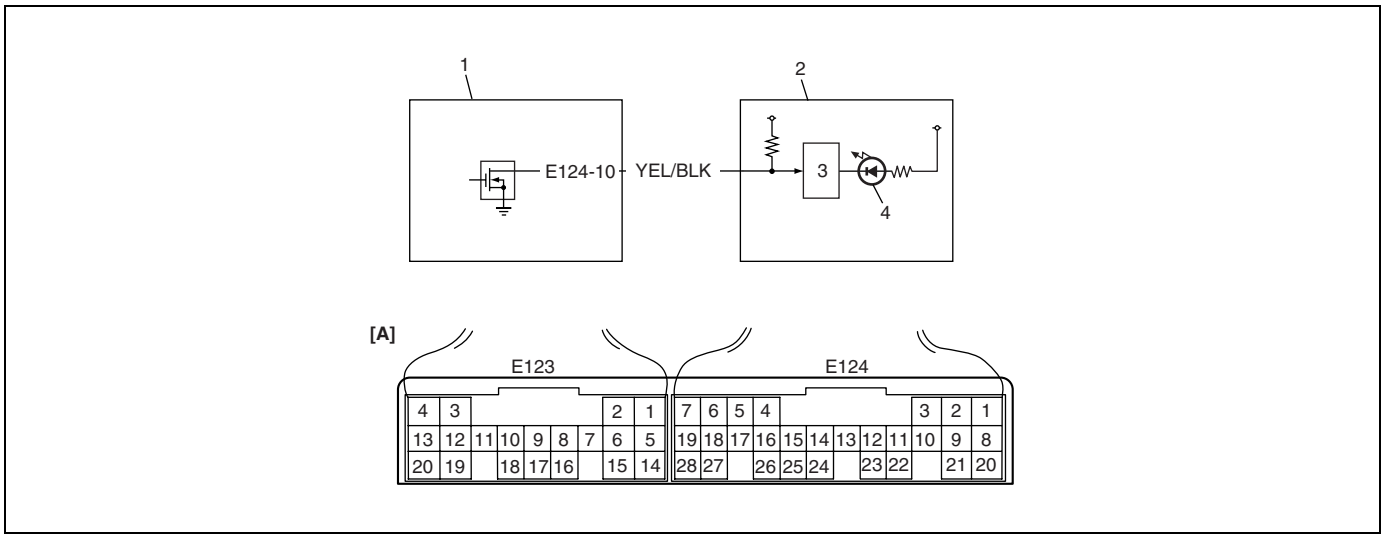

1. TCM	4. Transmission warning light
2. Combination meter	[A]: Terminal arrangement of TCM connector (M13 engine model without VVT) (viewed from harness side)
3. Light driver	

Circuit Description

When ignition switch is turned ON and malfunction is not detected, TCM turns transmission warning light ON only for 2 seconds to check bulb and turns it OFF.
When ignition switch is turned ON and malfunction is detected, regardless of whether engine is running or not, transmission warning light is turned ON by TCM and combination meter while malfunction is detected to warn driver of such occurrence of trouble. TCM-Combination meter signal which is outputted from TCM to combination meter is a voltage signal (0 – 12 volts) which is outputted from TCM to combination meter through the signal circuit, based on transmission warning light signal and A/T select lever position indicator signal.

Troubleshooting

Step	Action	Yes	No
1	Combination Meter Power Supply Check 1) Turn ignition switch ON. Does other indicator / warning lights in combination meter comes ON?	Go to Step 2.	Repair combination meter power supply circuit referring to "Combination Meter" in Section 8.
2	TCM power and ground circuit check referring to Table A-5 Is it in good condition?	Go to Step 3.	Repair or replace.
3	Combination Meter Function Check 1) Turn ignition switch ON. Does A/T selector position indicator show correct select lever position?	Substitute a known-good combination meter and recheck.	Go to Step 4.

Step	Action	Yes	No
4	TCM-Combination Meter Serial Communication Circuit Check 1) Disconnect TCM connector. 2) Turn ignition switch ON. 3) Measure voltage between “E124-10” terminal of TCM connector and vehicle body ground. Is voltage 12 – 15 V?	Go to Step 5.	Open or short to ground circuit in “YEL/BLK” circuit.
5	TCM-Combination Meter Serial Communication Circuit Check 1) Disconnect combination meter connector. 2) Turn ignition switch ON. 3) Measure voltage between “E124-10” terminal of TCM connector and vehicle body ground. Is voltage 12 – 15 V?	Short to power circuit in “YEL/BLK” circuit.	Substitute a known-good TCM and recheck. If OK, substitute a known-good combination meter and recheck.

Diagnostic Flow Table A-4: Transmission Warning Light Circuit Check – Light Remains "ON" at Ignition Switch ON (M13 Engine Model without VVT)

Wiring Diagram

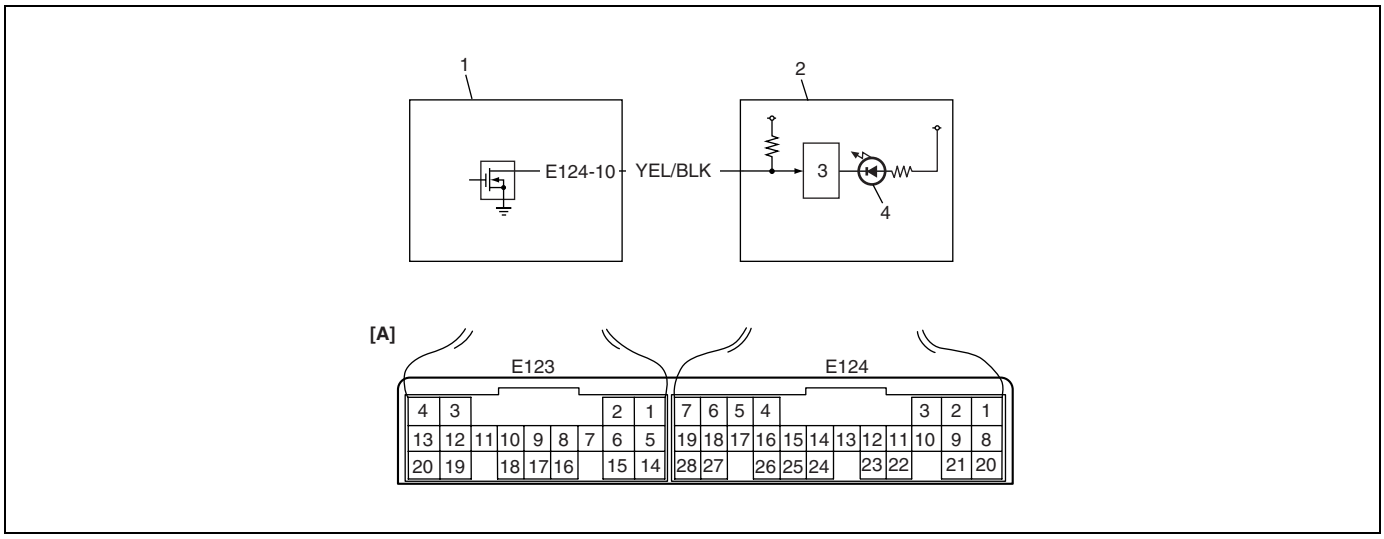

1. TCM	4. Transmission warning light
2. Combination meter	[A]: Terminal arrangement of TCM connector (M13 engine model without VVT) (viewed from harness side)
3. Light driver	

Circuit Description

When ignition switch is turned ON and malfunction is not detected, TCM turns transmission warning light ON only for 2 seconds to check bulb and turns it OFF.
When ignition switch is turned ON and malfunction is detected, regardless of whether engine is running or not, transmission warning light is turned ON by TCM and combination meter while malfunction is detected to warn driver of such occurrence of trouble. TCM-Combination meter signal which is outputted from TCM to combination meter is a voltage signal (0 – 12 volts) which is outputted from TCM to combination meter through the signal circuit, based on transmission warning light signal and A/T select lever position indicator signal.

Troubleshooting

Step	Action	Yes	No
1	Diagnostic Trouble Code (DTC) Check 1) Check DTC referring to "DTC Check" in this section. Is there any DTC(s)?	Perform DTC Flow to repair and retry.	Substitute a known-good TCM and recheck. If OK, substitute a known-good combination meter and recheck.

Diagnostic Flow Table A-5: TCM Power and Ground Circuit Check

Wiring Diagram

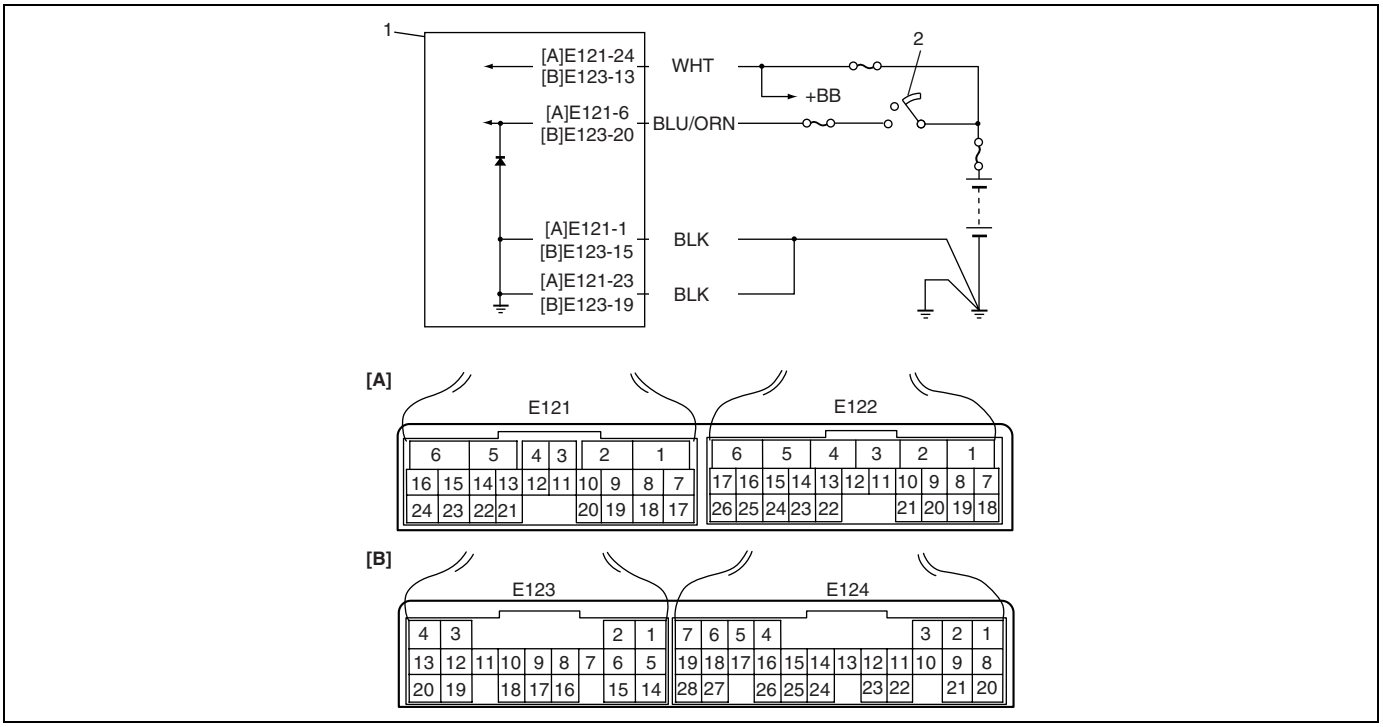

1. TCM	[A]: Terminal arrangement of TCM connector (M13 engine model with VVT) (viewed from harness side)
2. Ignition switch	[B]: Terminal arrangement of TCM connector (M13 engine model without VVT) (viewed from harness side)

Troubleshooting

Step	Action	Yes	No
1	Check TCM Back-up Power Circuit 1) Disconnect TCM connector with ignition switch OFF. 2) Check for proper connection to TCM at “E121-24” [A] or “E123-13” [B] terminal. 3) If OK, check voltage at terminal “E121-24” [A] or “E123-13” [B] of disconnected TCM connector. Is it 10 – 14 V?	Go to Step 2.	“WHT” circuit open or shorted to ground.
2	Check TCM Power Circuit. 1) Disconnect TCM connector with ignition switch OFF. 2) Check for proper connection to TCM at “E121-6” [A] or “E123-20” [B] terminal. 3) If OK, turn ignition switch ON and check voltage at terminal “E121-6” [A] or “E123-20” [B] of disconnected TCM connector. Is it 10 – 14 V?	Go to Step 3.	“BLU/ORN” circuit open or shorted to ground.

Step	Action	Yes	No
3	Check TCM Ground Circuit. 1) Turn ignition switch OFF. 2) With TCM connectors disconnected, check for proper connection to TCM at “E121-1” / “E121-23” [A] or “E123-15 / E123-19” [B] terminal. 3) If OK, check for resistance between “E121-1” / “E121-23” [A] or “E123-15 / E123-19” [B] terminal of disconnected TCM connector and body ground. Is continuity indicated?	TCM power and ground circuits are in good condition.	“BLK” circuit for TCM ground open.

DTC P0705 (No.34) Transmission Range Sensor Circuit Malfunction

Wiring Diagram

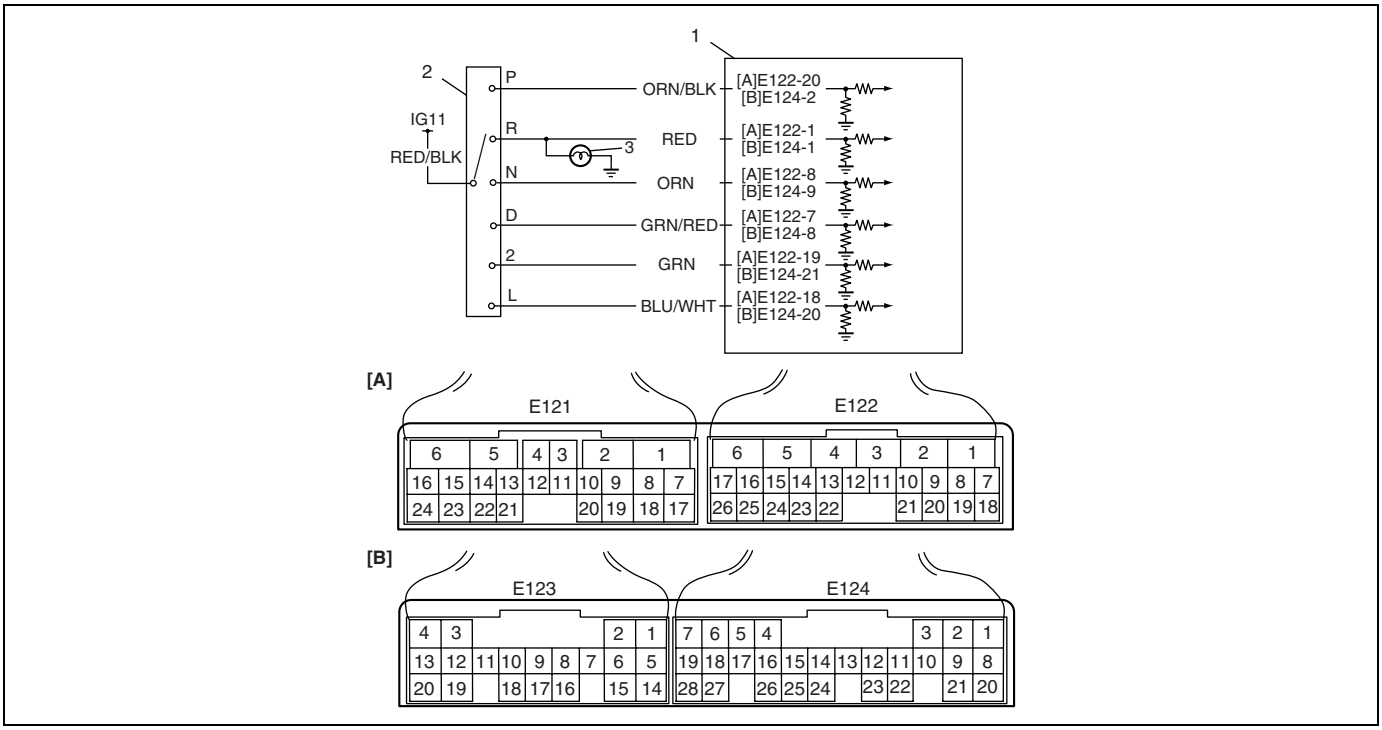

1. TCM	[A]: Terminal arrangement of TCM connector (M13 engine model with VVT) (viewed from harness side)
2. Transmission range sensor	[B]: Terminal arrangement of TCM connector (M13 engine model without VVT) (viewed from harness side)
3. Back up lamp	

DTC Detecting Condition and Trouble Area

DTC DETECTING CONDITION	TROUBLE AREA
Multiple signals are inputted simultaneously for 12 seconds.	• Select cable maladjusted. • Transmission range sensor (switch) maladjusted. • Transmission range sensor (switch) or its circuit malfunction. • TCM

DTC Confirmation Procedure

1) Connect scan tool to DLC with ignition switch OFF.
2) Clear DTCs in TCM memory by using scan tool.
3) Start engine and shift select lever to “D” range.
4) Keep engine running at idle speed for 25 seconds or more.
5) Stop vehicle and check DTC.

Troubleshooting

Step	Action	Yes	No
1	Was “Automatic Transmission Diagnostic Flow Table” performed?	Go to Step 2.	Go to “Automatic Transmission Diagnostic Flow Table” in this section.
2	Do you have SUZUKI scan tool?	Go to Step 3.	Go to Step 4.
3	Check Transmission range sensor(switch) circuit for operation. Check by using SUZUKI scan tool: 1) Connect SUZUKI scan tool to DLC with ignition switch OFF. 2) Turn ignition switch ON and check transmission range signal (P, R, N, D, 2 or L) on display when shifting select lever to each range. Is applicable range indicated? Are check results satisfactory?	Intermittent trouble. Check for intermittent referring to “Intermittent and Poor Connection” in Section 0A.	Go to Step 5.
4	Check Transmission range sensor (switch) circuit for operation. Check by not using SUZUKI scan tool: 1) Turn ignition switch ON. 2) Check voltage at terminals (“E122-1”, “E122-7”, “E122-8”, “E122-18”, “E122-19” and “E122-20” [A]) or (“E124-1”, “E124-2”, “E124-8”, “E124-9”, “E124-20” and “E124-21” [B]) respectively with select lever shifted to each range. Taking terminal “E122-19” [A] or “E124-21” [B] as an example, is battery voltage indicated only when select lever is shifted to “2” range and 0 V for other ranges as shown in table below? Check voltage at other terminals likewise, referring to figure. Are check results satisfactory?	Intermittent trouble. Check for intermittent referring to “Intermittent and Poor Connection” in Section 0A.	Go to Step 5.
5	Check transmission range sensor for installation position. 1) Shift select lever to “N” range. 2) Check that “N” reference line on sensor and needle direction shaped on lock washer are aligned. Are they aligned?	Go to Step 6.	Adjust.
6	Check select cable for adjustment referring to “Select Cable Adjustment” in this section. Is it adjusted correctly?	Go to Step 7.	Adjust.

Step	Action	Yes	No
7	Check Transmission range sensor (switch) referring to “Transmission Range Sensor” in this section. Are check results satisfactory?	“RED/BLK”, “ORN/BLK”, “RED”, “ORN”, “GRN/RED”, “GRN” or “BLU/WHT” circuit shorted to power circuit or shorted each other. If wires and connections are OK, substitute a known-good TCM and recheck.	Replace Transmission range sensor.

Table for Step 4

		Terminal					
M13 engine model with VVT		E122-20	E122-1	E122-8	E122-7	E122-19	E122-18
M13 engine model without VVT		E124-2	E124-1	E124-9	E124-8	E124-21	E124-20
Select lever position	P	8 – 14 V	0 V	0 V	0 V	0 V	0 V
	R	0 V	8 – 14 V	0 V	0 V	0 V	0 V
	N	0 V	0 V	8 – 14 V	0 V	0 V	0 V
	D or 3	0 V	0 V	0 V	8 – 14 V	0 V	0 V
	2	0 V	0 V	0 V	0 V	8 – 14 V	0 V
	L	0 V	0 V	0 V	0 V	0 V	8 – 14 V

DTC P0707 (No.34) Transmission Range Sensor Circuit Low

Wiring Diagram

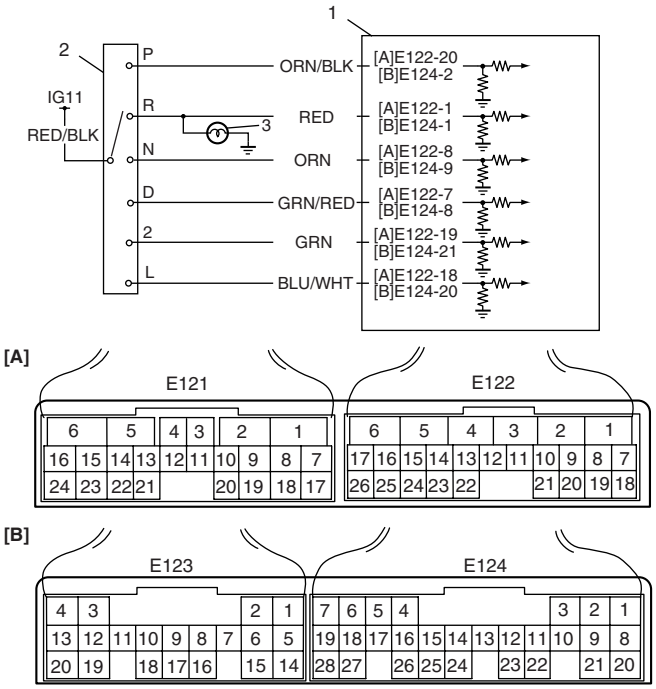

1. TCM	[A]: Terminal arrangement of TCM connector (M13 engine model with VVT) (viewed from harness side)
2. Transmission range sensor	[B]: Terminal arrangement of TCM connector (M13 engine model without VVT) (viewed from harness side)
3. Back up lamp	

DTC Detecting Condition and Trouble Area

DTC DETECTING CONDITION	TROUBLE AREA
Transmission range switch signal (P, R, N, D, 2, or L) is not inputted for more than 32 seconds when vehicle speed is faster than 30 km/h (19 mile/h) and engine speed is faster than 1500 rpm.	• Select cable maladjusted. • Transmission range sensor (switch) maladjusted. • Transmission range sensor (switch) or its circuit malfunction. • TCM

DTC Confirmation Procedure

WARNING:

- **When performing a road test, select a place where there is no traffic or possibility of a traffic accident and be very careful during testing to avoid occurrence of an accident.**
- **Road test should be carried out with 2 persons, a driver and tester, on a level road.**

1) Connect scan tool to DLC with ignition switch OFF.
2) Clear DTCs in TCM memory by using scan tool.
3) Start engine and shift select lever.
4) Shift select lever to “D” range.
5) Start vehicle and increase vehicle speed to 40 km/h (25 mile/h) or more for 1 minutes.
6) Stop vehicle and turn ignition switch OFF.
7) Repeat Step 3) to 5) one time.
8) Stop vehicle and check DTC.

Troubleshooting

Step	Action	Yes	No
1	Was “Automatic Transmission Diagnostic Flow Table” performed?	Go to Step 2.	Go to “Automatic Transmission Diagnostic Flow Table” in this section.
2	Do you have SUZUKI scan tool?	Go to Step 3.	Go to Step 4.
3	Check Transmission range sensor (switch) circuit for operation. Check by using SUZUKI scan tool: 1) Connect SUZUKI scan tool to DLC with ignition switch OFF. 2) Turn ignition switch ON and check transmission range signal (P, R, N, D, 2 or L) on display when shifting select lever to each range. Is applicable range indicated? Are check results satisfactory?	Intermittent trouble. Check for intermittent referring to “Intermittent and Poor Connection” in Section 0A.	Go to Step 5.
4	Check Transmission range sensor (switch) circuit for operation. Check by not using SUZUKI scan tool: 1) Turn ignition switch ON. 2) Check voltage at terminals (“E122-1”, “E122-7”, “E122-8”, “E122-18”, “E122-19” and “E122-20” [A]) or (“E124-1”, “E124-2”, “E124-8”, “E124-9”, “E124-20” and “E124-21” [B]) respectively with select lever shifted to each range. Taking terminal “E122-19” [A] or “E124-21” [B] as an example, is battery voltage indicated only when select lever is shifted to “2” range and 0 V for other ranges as shown in table below? Check voltage at other terminals likewise, referring to figure. Are check results satisfactory?	Intermittent trouble. Check for intermittent referring to “Intermittent and Poor Connection” in Section 0A.	Go to Step 5.
5	Check transmission range sensor for installation position. 1) Shift select lever to “N” range. 2) Check that “N” reference line on sensor and needle direction shaped on lock washer are aligned. Are they aligned?	Go to Step 7.	Adjust.
6	Check select cable for adjustment referring to “Select Cable Adjustment” in this section. Is it adjusted correctly?	Go to Step 6.	Adjust.

Step	Action	Yes	No
7	Check Transmission range sensor (switch) referring to “Transmission Range Sensor” in this section. Are check results satisfactory?	“RED/BLK”, “ORN/BLK”, “RED”, “ORN”, “GRN/RED”, “GRN” or “BLU/WHT” circuit open or short to ground. If wires and connections are OK, substitute a know-good TCM and recheck.	Replace Transmission range sensor.

Table for Step 4

		Terminal					
M13 engine model with VVT		E122-20	E122-1	E122-8	E122-7	E122-19	E122-18
M13 engine model without VVT		E124-2	E124-1	E124-9	E124-8	E124-21	E124-20
Select lever position	P	8 – 14 V	0 V	0 V	0 V	0 V	0 V
	R	0 V	8 – 14 V	0 V	0 V	0 V	0 V
	N	0 V	0 V	8 – 14 V	0 V	0 V	0 V
	D or 3	0 V	0 V	0 V	8 – 14 V	0 V	0 V
	2	0 V	0 V	0 V	0 V	8 – 14 V	0 V
	L	0 V	0 V	0 V	0 V	0 V	8 – 14 V

DTC P0712 (No.38) Transmission Fluid Temperature Sensor Circuit Low

Wiring Diagram

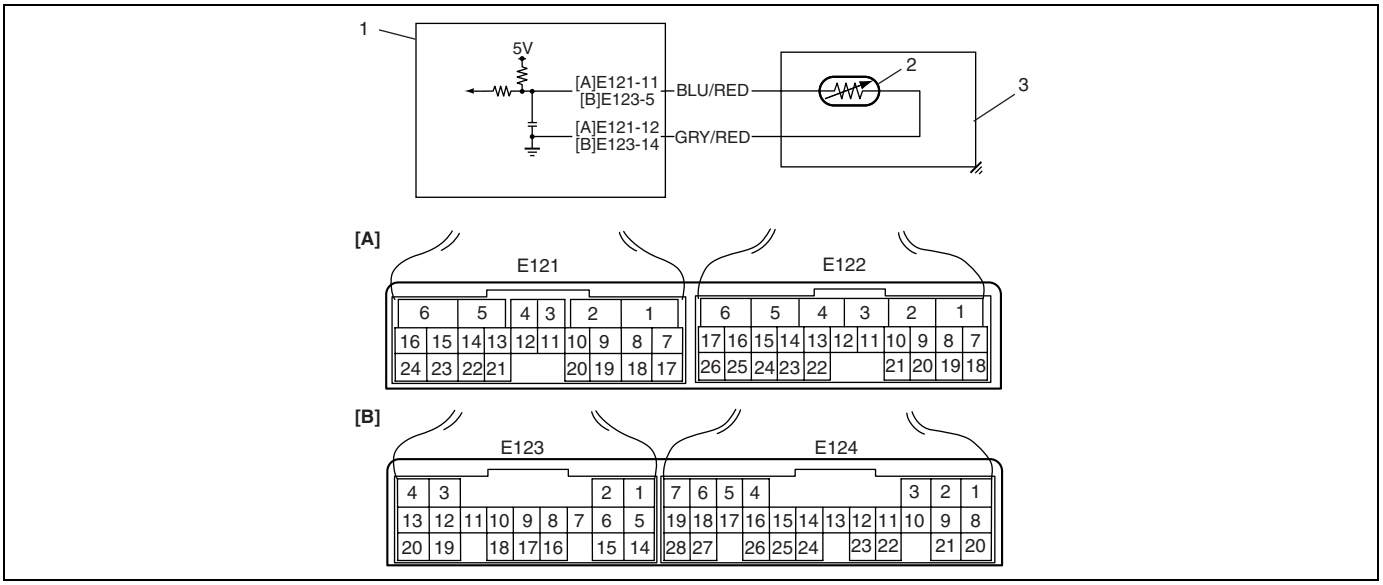

1. TCM	[A]: Terminal arrangement of TCM connector (M13 engine model with VVT) (viewed from harness side)
2. Transmission fluid temperature sensor	[B]: Terminal arrangement of TCM connector (M13 engine model without VVT) (viewed from harness side)
3. A/T	

DTC Detecting Condition and Trouble Area

DTC DETECTING CONDITION	TROUBLE AREA
Transmission temperature sensor terminal voltage is less than 0.05 V for 5 minutes or more after turning ignition switch ON.	• Transmission fluid temperature sensor or its circuit malfunction. • TCM

DTC Confirmation Procedure

WARNING:

- **When performing a road test, select a place where there is no traffic or possibility of a traffic accident and be very careful during testing to avoid occurrence of an accident.**
- **Road test should be carried out with 2 persons, a driver and tester, on a level road.**

1) Connect scan tool to DLC with ignition switch OFF.
2) Clear DTC in TCM memory and start engine.
3) Keep engine running at idle speed for 10 minutes or more.
4) Stop vehicle and check DTC.

Troubleshooting

Step	Action	Yes	No
1	Was “Automatic Transmission Diagnostic Flow Table” performed?	Go to Step 2.	Go to “Automatic Transmission Diagnostic Flow Table” in this section.
2	Check Transmission Fluid Temperature Circuit for Ground Short. Check continuity between terminal “E121-11” [A] or “E123-5” [B] of disconnected harness side TCM connector and ground. Is continuity indicated?	“BLU/RED” circuit shorted to ground.	Go to Step 3.
3	Check Transmission Fluid Temperature Circuit for IG Short. 1) Cool down A/T fluid temperature under ambient temperature. 2) Connect TCM connectors to TCM with ignition switch OFF. 3) Turn ignition switch ON. 4) Measure voltage between terminal “E121-11” [A] or “E123-5” [B] of TCM connector and ground. Is it 4.6 V or more?	“BLU/RED” circuit shorted to power circuit. If circuit is OK, go to Step 4.	Intermittent trouble or faulty TCM. Check for intermittent referring to “Intermittent and Poor Connection” in Section 0A. If OK, substitute a known-good TCM and recheck.
4	Inspect Transmission Fluid Temperature Sensor. Inspect transmission temperature sensor referring to “Transmission Fluid Temperature Sensor” in this section. Is result satisfactory?	Intermittent trouble or faulty TCM. Check for intermittent referring to “Intermittent and Poor Connection” in Section 0A. If OK, substitute a known-good TCM and recheck.	Replace transmission fluid temperature sensor.

DTC P0713 (No.36) Transmission Fluid Temperature Sensor Circuit High

Wiring Diagram

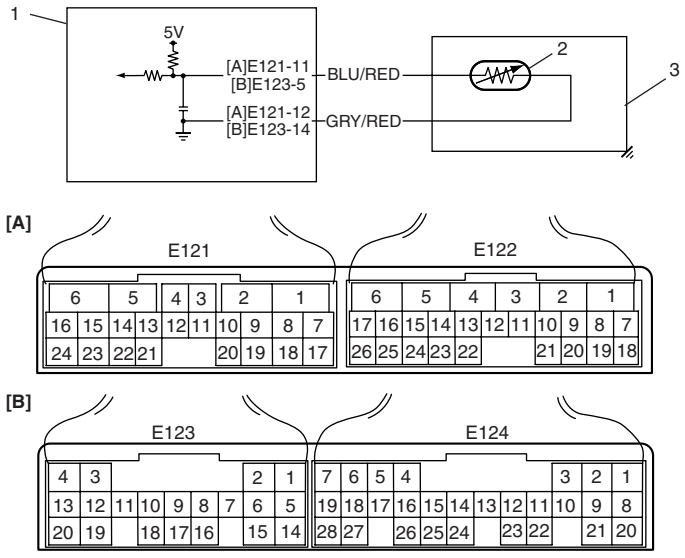

1. TCM	[A]: Terminal arrangement of TCM connector (M13 engine model with VVT) (viewed from harness side)
2. Transmission fluid temperature sensor	[B]: Terminal arrangement of TCM connector (M13 engine model without VVT) (viewed from harness side)
3. A/T	

DTC Detecting Condition and Trouble Area

DTC DETECTING CONDITION	TROUBLE AREA
Transmission temperature sensor terminal voltage is more than 4.6 V and shift range is in “R”, “D”, “2” or “L” for 15 minutes after starting engine.	• Transmission fluid temperature sensor or its circuit malfunction. • TCM

DTC Confirmation Procedure

WARNING:

- **When performing a road test, select a place where there is no traffic or possibility of a traffic accident and be very careful during testing to avoid occurrence of an accident.**
- **Road test should be carried out with 2 persons, a driver and tester, on a level road.**

1) Connect scan tool to DLC with ignition switch OFF.
2) Clear DTC in TCM memory and start engine.
3) Start vehicle and increase vehicle speed to about 40 km/h (25 mile/h) for 20 minutes or more.
4) Stop vehicle and check DTC.

Troubleshooting

Step	Action	Yes	No
1	Was “Automatic Transmission Diagnostic Flow Table” performed?	Go to Step 2.	Go to “Automatic Transmission Diagnostic Flow Table” in this section.
2	Check Transmission Fluid Temperature Circuit for Open. 1) Turn ignition switch OFF. 2) Disconnect TCM connectors from TCM. 3) Check for proper connection to transmission fluid temperature sensor at terminals “E121-11” and “E121-12” [A] or “E123-5” and “E123-14” [B]. 4) If OK, check continuity between terminals “E121-11” and “E121-12” [A] or “E123-5” and “E123-14” [B] of disconnected harness side TCM connector. Is continuity indicated?	Go to Step 3.	“BLU/RED” or “GRN/RED” circuit open.
3	Check Transmission Fluid Temperature Circuit for IG Short. 1) Cool down A/T fluid temperature under ambient temperature. 2) Connect TCM connectors to TCM with ignition switch OFF. 3) Turn ignition switch ON. 4) Measure voltage between terminal “E121-11” [A] or “E123-5” [B] of TCM connector and ground. Is it 4.6 V or more?	“BLU/RED” circuit shorted to power circuit. If circuit is OK, go to Step 4.	Intermittent trouble or faulty TCM. Check for intermittent referring to “Intermittent and Poor Connection” in Section 0A. If OK, substitute a known-good TCM and recheck.
4	Inspect Transmission Fluid Temperature Sensor. Inspect transmission temperature sensor referring to “Transmission Fluid Temperature Sensor” in this section. Is result satisfactory?	Intermittent trouble or faulty TCM. Check for intermittent referring to “Intermittent and Poor Connection” in Section 0A. If OK, substitute a known-good TCM and recheck.	Replace transmission fluid temperature sensor.

DTC P0717 (No.14) Input / Turbine Speed Sensor Circuit Malfunction

Wiring Diagram

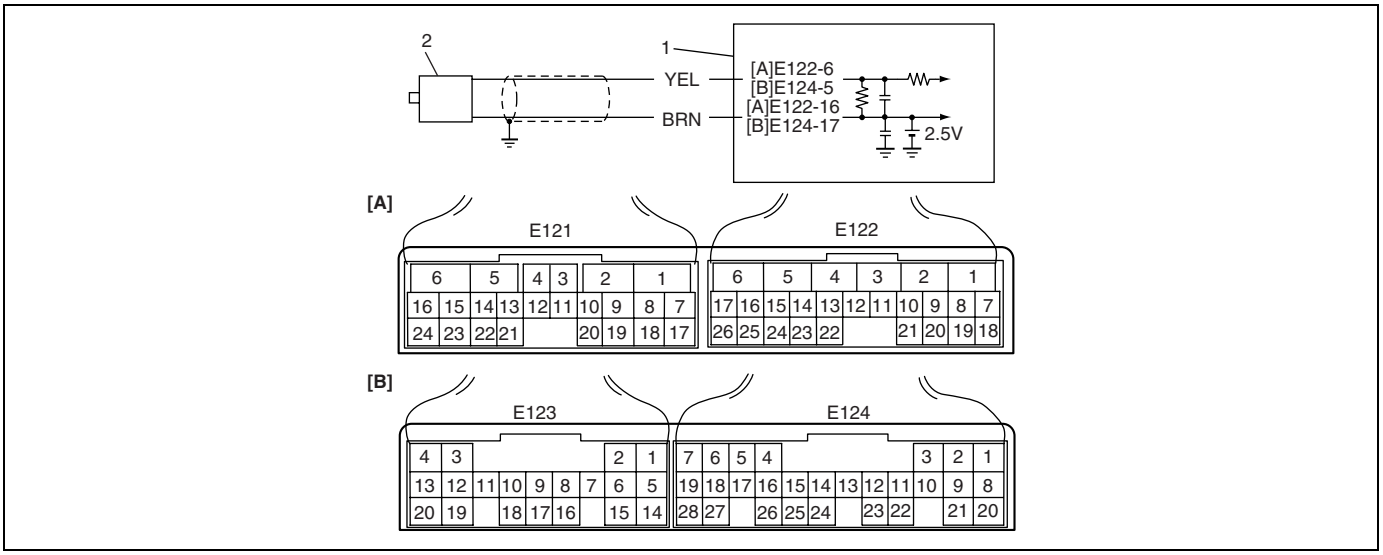

1. TCM	[A]: Terminal arrangement of TCM connector (M13 engine model with VVT) (viewed from harness side)
2. Input shaft speed sensor	[B]: Terminal arrangement of TCM connector (M13 engine model without VVT) (viewed from harness side)

DTC Detecting Condition and Trouble Area

DTC DETECTING CONDITION	TROUBLE AREA
No input shaft speed sensor signal is detected although output shaft speed sensor signals are detected.	• Input shaft speed sensor or its circuit malfunction. • Improper input shaft speed sensor installation. • Damaged direct clutch drum. • Foreign material attachment to sensor or drum. • TCM

DTC Confirmation Procedure

WARNING:
- **When performing a road test, select a place where there is no traffic or possibility of a traffic accident and be very careful during testing to avoid occurrence of an accident.**
- **Road test should be carried out with 2 persons, a driver and tester, on a level road.**

1) Connect scan tool to DLC with ignition switch OFF.
2) Clear DTC in TCM memory and start engine.
3) Shift selector lever to “D” range and drive vehicle at 50 km/h (31 mile/h) or more with 3rd gear at least for 5 minutes.
4) Stop vehicle and check DTC.

Troubleshooting

Step	Action	Yes	No
1	Was “Automatic Transmission Diagnostic Flow Table” performed?	Go to Step 2.	Go to “Automatic Transmission Diagnostic Flow Table” in this section.
2	Check Input Shaft Speed Sensor Circuit. 1) Disconnect TCM connectors with ignition switch OFF. 2) Check for proper connection to input shaft speed sensor at “E122-6” and “E122-16” [A] or “E124-5” and “E124-17” [B] terminals. 3) If OK, check resistance of sensor circuit. Resistance between terminals “E122-6” and “E122-16” [A] or “E124-5” and “E124-17” [B] of disconnected harness side TCM connector: 560 – 680 Ω at 20 °C (68 °F) Continuity between terminal “E122-6” / “E122-16” [A] or “E124-5” / “E124-17” [B] of disconnected harness side TCM connector and ground: No continuity Are check result satisfactory?	Go to Step 4.	Go to Step 3.
3	Inspect Input Shaft Speed Sensor. Inspect input shaft speed sensor referring to “Input Shaft Speed Sensor Inspection”. Is result satisfactory?	“YEL” or “BRN” circuit open or short.	Replace input shaft speed sensor.
4	Check visually input shaft speed sensor and direct clutch drum for the followings. See Fig. • No damage • No foreign material attached • Correct installation Are they in good condition?	Intermittent trouble or faulty TCM. Check for intermittent referring to “Intermittent and Poor Connection” in Section 0A. If OK, substitute a known-good TCM and recheck.	Clean, repair or replace.

Fig. for Step 4

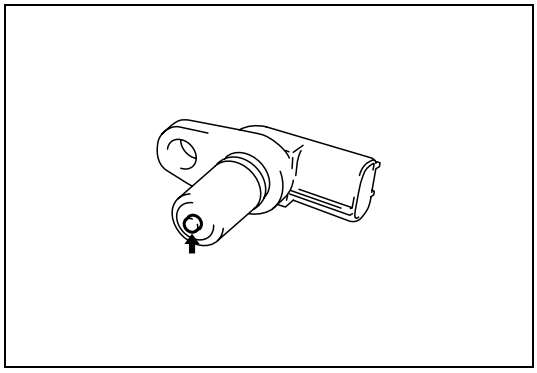

DTC P0722 (No.31) Output Speed Sensor Circuit No Signal

Wiring Diagram

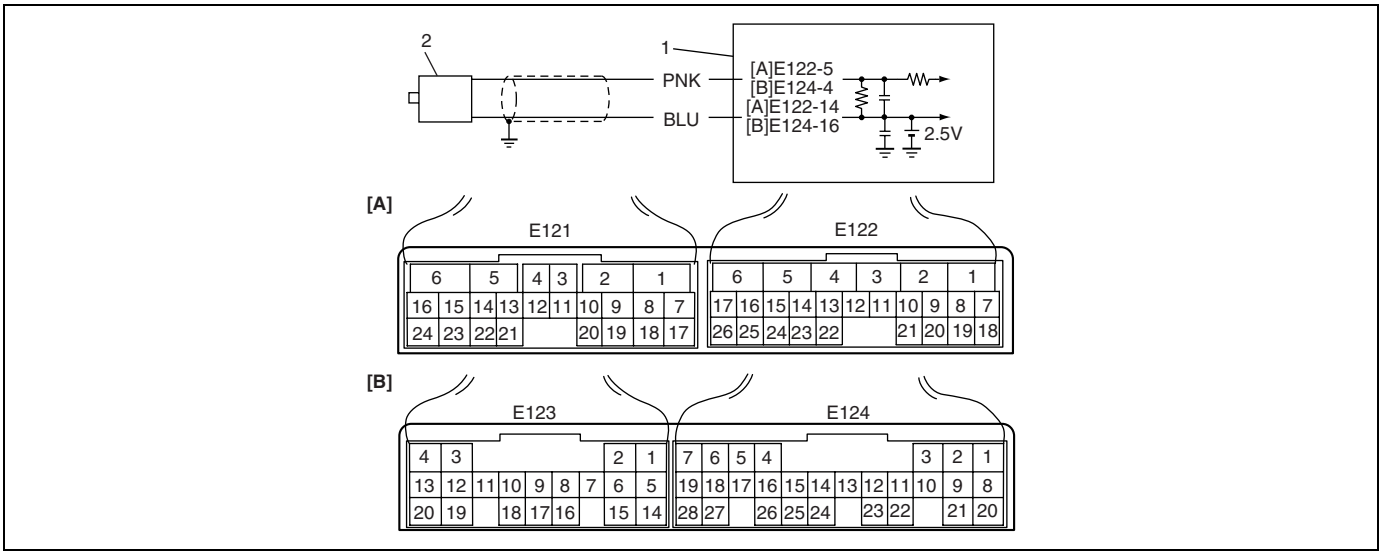

1. TCM	[A]: Terminal arrangement of TCM connector (M13 engine model with VVT) (viewed from harness side)
2. Output shaft speed sensor	[B]: Terminal arrangement of TCM connector (M13 engine model without VVT) (viewed from harness side)

DTC Detecting Condition and Trouble Area

DTC DETECTING CONDITION	TROUBLE AREA
No output shaft speed sensor signal is detected although input shaft speed sensor signals are detected while vehicle is running at 5 km/h (3 mile/h) or more vehicle speed with “D”, “2” or “L” range.	• Output shaft speed sensor or its circuit malfunction. • Improper output shaft speed sensor installation. • Damaged sensor rotor. • Foreign material attachment to sensor or rotor. • TCM

DTC Confirmation Procedure

WARNING:
- **When performing a road test, select a place where there is no traffic or possibility of a traffic accident and be very careful during testing to avoid occurrence of an accident.**
- **Road test should be carried out with 2 persons, a driver and tester, on a level road.**

1) Connect scan tool to DLC with ignition switch OFF.
2) Clear DTC in TCM memory and start engine.
3) Shift selector lever to “D” range and drive vehicle at 50 km/h (31 mile/h) or more with 3rd gear at least for 5 minutes.
4) Stop vehicle and check DTC.

Troubleshooting

Step	Action	Yes	No
1	Was “Automatic Transmission Diagnostic Flow Table” performed?	Go to Step 2.	Go to “Automatic Transmission Diagnostic Flow Table” in this section.
2	Check Output Shaft Speed Sensor Circuit. 1) Disconnect TCM connectors with ignition switch OFF. 2) Check for proper connection to output shaft speed sensor at “E122-5” and “E122-14” [A] or “E124-4” and “E124-16” [B] terminals. 3) If OK, check resistance of sensor circuit. Resistance between terminals “E122-5” and “E122-14” [A] or “E124-4” and “E124-16” [B] of disconnected harness side TCM connector: 560 – 680 Ω at 20 °C (68 °F) Continuity between terminal “E122-5” / “E122-14” [A] or “E124-4” / “E124-16” [B] of disconnected harness side TCM connector and ground: No continuity Are check result satisfactory?	Go to Step 4.	Go to Step 3.
3	Inspect Output Shaft Speed Sensor. Inspect output shaft speed sensor referring to “Output Shaft Speed Sensor Inspection”. Is result satisfactory?	“PNK” or “BLU” circuit open or short.	Replace output shaft speed sensor.
4	Check visually output shaft speed sensor and sensor rotor for the followings. See Fig. • No damage • No foreign material attached • Correct installation Are they in good condition?	Intermittent trouble or faulty TCM. Check for intermittent referring to “Intermittent and Poor Connection” in Section 0A. If OK, substitute a known-good TCM and recheck.	Clean, repair or replace.

Fig. for Step 4

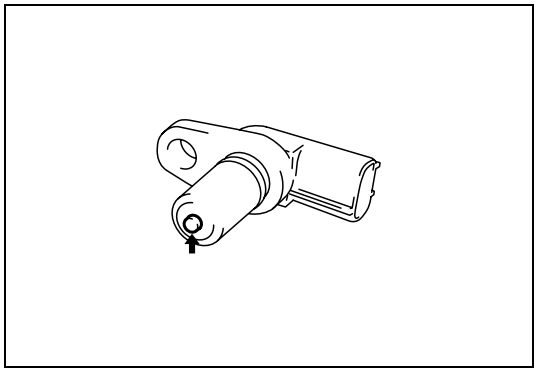

DTC P0727 (No.35) Engine Speed Input Circuit No Signal (M13 Engine Model without VVT)

Wiring Diagram

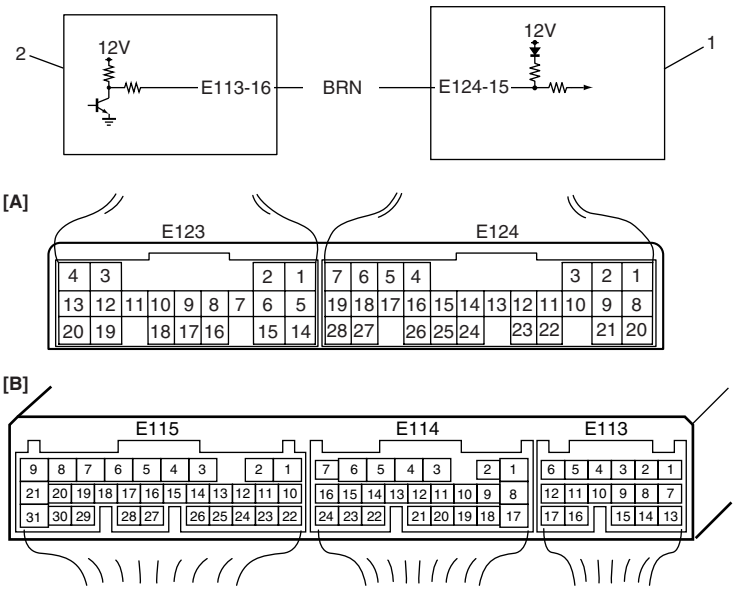

1. TCM	[A]: Terminal arrangement of TCM connector (viewed from harness side)
2. ECM	[B]: Terminal arrangement of ECM connector (viewed from harness side)

DTC Detecting Condition and Trouble Area

DTC DETECTING CONDITION	TROUBLE AREA
No engine speed signal is inputted for 5 seconds although input shaft speed sensor signals are detected.	• Engine speed input signal circuit malfunction. • TCM • ECM

DTC Confirmation Procedure

1) Connect scan tool to DLC with ignition switch OFF.
2) Clear DTCs in TCM and ECM memories.
3) Start engine and raise engine speed to 2500 rpm.
4) Keep engine speed of 2500 rpm for 10 seconds.
5) Release accelerator pedal and check DTC.

Troubleshooting

Step	Action	Yes	No
1	Was “Automatic Transmission Diagnostic Flow Table” performed?	Go to Step 2.	Go to “Automatic Transmission Diagnostic Flow Table” in this section.
2	Check Engine Speed Input Signal Circuit for Open. 1) Turn ignition switch OFF. 2) Disconnect TCM and ECM connectors from TCM and ECM. 3) Check for proper connection to TCM at terminal “E124-15” and to ECM at terminal “E113-16”. 4) If OK, check continuity between terminals “E124-15” and “E113-16” of disconnected harness side TCM and ECM connectors. Is continuity indicated?	Go to Step 3.	“BRN” circuit open.
3	Check Engine Speed Input Signal Circuit for Short. 1) Check continuity between terminal “E124-15” of disconnected harness side TCM connector and ground. Is continuity indicated?	“BRN” circuit shorted to ground.	Go to Step 4.
4	Check TCM Terminal Voltage. 1) Connect TCM connectors to TCM with ignition switch OFF. 2) Turn ignition switch ON. 3) Measure voltage between terminal “E124-15” of connected harness side ECM connector and ground. Is it 8 – 14 V?	Go to Step 5.	Substitute a known-good TCM and recheck.
5	Check ECM Terminal Voltage. 1) Turn ignition switch OFF. 2) Connect ECM connectors to ECM. 3) Turn ignition switch ON. 4) Measure voltage between terminal “E113-16” of connected harness side ECM connector and ground. Is it 0 – 1 V?	Intermittent trouble or faulty TCM or ECM. Check for intermittent referring to “Intermittent and Poor Connection” in Section 0A. If OK, substitute a known-good TCM and/or ECM recheck.	Substitute a known-good ECM and recheck.

DTC P0741 (No.78) / P0742 (No.77) TCC Circuit Performance or Stuck OFF / TCC Circuit Stuck ON (M13 Engine Model with VVT)

DTC Detecting Condition and Trouble Area

[DTC P0741]

DTC DETECTING CONDITION	TROUBLE AREA
When driving vehicle with 3rd or 4th gear in "D" or "3" range, difference in revolution between engine and A/T input (input shaft speed) is lager than specification although TCM commanded TCC solenoid to turn ON.	• Mechanical malfunction of TCC solenoid valve. • Malfunction of valve body assembly. • Fluid passage clogged or leaking. • Torque converter clutch malfunction.

[DTC P0742]

DTC DETECTING CONDITION	TROUBLE AREA
When driving vehicle with 3rd gear in "D" or "3" range, difference in revolution between engine and A/T input (input shaft speed) is smaller than specification although TCM commanded TCC solenoid to turn OFF.	• Mechanical malfunction of TCC solenoid valve. • Malfunction of valve body assembly. • Fluid passage clogged or leaking. • Torque converter clutch malfunction.

DTC Confirmation Procedure

WARNING:
- **When performing a road test, select a place where there is no traffic or possibility of a traffic accident and be very careful during testing to avoid occurrence of an accident.**
- **Road test should be carried out with 2 persons, a driver and tester, on a level road.**

1) Connect scan tool to DLC with ignition switch OFF.
2) Clear DTC in TCM memory.
3) Start engine and warm it up to normal operating temperature.
4) Shift select lever to "N" and "D" range for each 10 seconds.
5) Drive vehicle with 4th in "D" range and lock-up ON for 20 seconds or longer referring to "Automatic Gear Shift Diagram" in this section.
6) Shift select lever to "3" range.
7) Drive vehicle with 2nd or 3rd gear in "D" range, 15 – 20% throttle opening and at vehicle speed of 25 – 40 km/h (16 – 25 mile/h).
8) Stop vehicle and turn ignition switch OFF.
9) Repeat Step 3) to 7) one time.
10) Stop vehicle and check DTC.

DTC Troubleshooting

Step	Action	Yes	No
1	Was "Automatic Transmission Diagnostic Flow Table" performed?	Go to Step 2.	Go to "Automatic Transmission Diagnostic Flow Table" in this section.
2	Check TCC solenoid valve for operation referring to "Shift Solenoid Valves, TCC solenoid valve and Timing solenoid valve Inspection" in this section. Are they in good condition?	Clean fluid passage or replace valve body assembly.	Replace TCC solenoid valve.

DTC P0751 (No.62) / P0752 (No.61) / P0756 (No.65) / P0757 (No.63) Shift Solenoid-A (No.1) Performance or Stuck OFF / Shift Solenoid-A (No.1) Stuck ON / Shift Solenoid-B (No.2) Performance or Stuck OFF / Shift Solenoid-B (No.2) Stuck ON (M13 Engine Model with VVT)

DTC Detecting Condition and Trouble Area

[DTC P0751]

DTC DETECTING CONDITION	TROUBLE AREA
3rd gear ratio is detected although TCM command is for 2nd gear while vehicle running at 20 km/h (12.5 mile/h) or more in “D” or “3” range after engine being warmed up.	• Mechanical malfunction of shift solenoid valve-A (No.1). • Malfunction of valve body assembly. • Fluid passage clogged or leaking. • Mechanical malfunction of automatic transmission (clutch, brake or gear etc.).

[DTC P0752]

DTC DETECTING CONDITION	TROUBLE AREA
2nd gear ratio is detected although TCM command is for 3rd gear while vehicle running at 20 km/h (12.5 mile/h) or more in “D” or “3” range after engine being warmed up.	• Mechanical malfunction of shift solenoid valve-A (No.1). • Malfunction of valve body assembly. • Fluid passage clogged or leaking. • Mechanical malfunction of automatic transmission (clutch, brake or gear etc.).

[DTC P0756]

DTC DETECTING CONDITION	TROUBLE AREA
3rd gear ratio is detected although TCM command is for 4th gear while vehicle running at 20 km/h (12.5 mile/h) or more in “D” or “3” range after engine being warmed up.	• Mechanical malfunction of shift solenoid valve-B (No.2). • Malfunction of valve body assembly. • Fluid passage clogged or leaking. • Mechanical malfunction of automatic transmission (clutch, brake or gear etc.).

[DTC P0757]

DTC DETECTING CONDITION	TROUBLE AREA
4th gear ratio is detected although TCM command is for 3rd gear while vehicle running at 20 km/h (12.5 mile/h) or more in “D” or “3” range after engine being warmed up.	• Mechanical malfunction of shift solenoid valve-B (No.2). • Malfunction of valve body assembly. • Fluid passage clogged or leaking. • Mechanical malfunction of automatic transmission (clutch, brake or gear etc.).

DTC Confirmation Procedure

WARNING:

- **When performing a road test, select a place where there is no traffic or possibility of a traffic accident and be very careful during testing to avoid occurrence of an accident.**
- **Road test should be carried out with 2 persons, a driver and tester, on a level road.**

1) Connect scan tool to DLC with ignition switch OFF.
2) Clear DTC in TCM memory.
3) Start engine and warm it up to normal operating temperature.
4) Shift select lever to “N” and “D” range for each 10 seconds.
5) Start vehicle and increase vehicle speed to 65 km/h (40 mile/h) with throttle position 10% or more.
6) Stop vehicle and turn ignition switch OFF.
7) Repeat Step 3) to 5) one time.
8) Stop vehicle and check DTC.

DTC Troubleshooting

Step	Action	Yes	No
1	Was “Automatic Transmission Diagnostic Flow Table” performed?	Go to Step 2.	Go to “Automatic Transmission Diagnostic Flow Table” in this section.
2	Check shift solenoid valve-A (No.1) or -B (No.2) for operation referring to “Shift Solenoid Valves, TCC Solenoid Valve and Timing Solenoid Valve Inspection” in this section. Are they in good condition?	Clean fluid passage or replace valve body assembly.	Replace shift solenoid valve-A or -B.

DTC P0787 (No.13) Shift / Timing Solenoid Control Circuit Low

Wiring Diagram

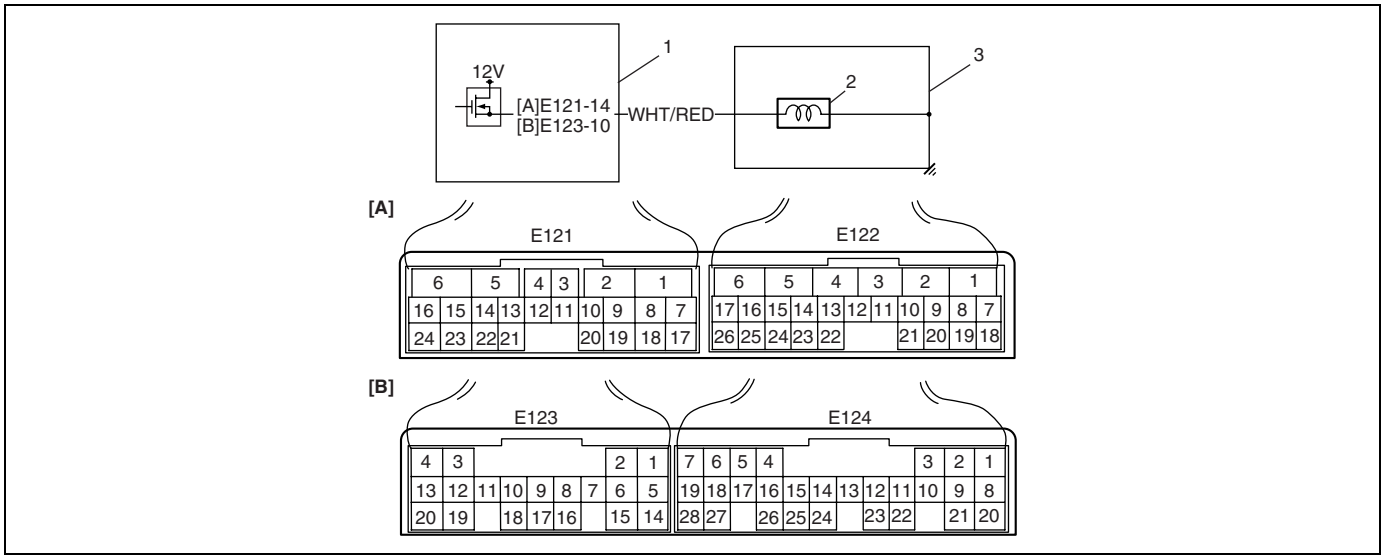

1. TCM	[A]: Terminal arrangement of TCM connector (M13 engine model with VVT) (viewed from harness side)
2. Timing solenoid valve	[B]: Terminal arrangement of TCM connector (M13 engine model without VVT) (viewed from harness side)
3. A/T	

DTC Detecting Condition and Trouble Area

DTC DETECTING CONDITION	TROUBLE AREA
Voltage of timing solenoid valve TCM terminal is low although TCM is commanding timing solenoid valve to turn ON.	• Timing solenoid valve circuit shorted to ground. • Timing solenoid valve malfunction. • TCM

DTC Confirmation Procedure

1) Connect scan tool to DLC with ignition switch OFF.
2) Clear DTC in TCM memory.
3) Start engine and shift selector lever to “N” range.
4) Repeat shifting selector lever from “N” range to “D” range and vice versa for 3 times.
5) Check DTC.

Troubleshooting

Step	Action	Yes	No
1	Was “Automatic Transmission Diagnostic Flow” performed?	Go to Step 2.	Go to “Automatic Transmission Diagnostic Flow” in this section.
2	Check Timing Solenoid Valve Circuit for Ground Short. 1) Turn ignition switch OFF. 2) Disconnect TCM connectors. 3) Measure resistance between terminal “E121-14” [A] or “E123-10” [B] of disconnected harness side TCM connector and ground. Is it 11 – 15 Ω (at 20 °C (68 °F))?	Intermittent trouble or faulty TCM. Check for intermittent referring to “Intermittent and Poor Connection” in Section 0A. If OK, substitute a known-good TCM and recheck.	Go to Step 3.
3	Check Timing Solenoid Valve Resistance 1) Turn ignition switch OFF. 2) Disconnect valve body harness connector on transmission. 3) Check for proper connection to solenoid valve at “WHT/RED” circuit. 4) Check resistance of solenoid valve. See Fig. Resistance between terminal of transmission side valve body harness connector and transmission: 11 – 15 Ω (at 20 °C (68 °F)) Is check result satisfactory?	“WHT/RED” circuit shorted to ground.	Replace timing solenoid valve or lead wire.

Fig. for Step 3

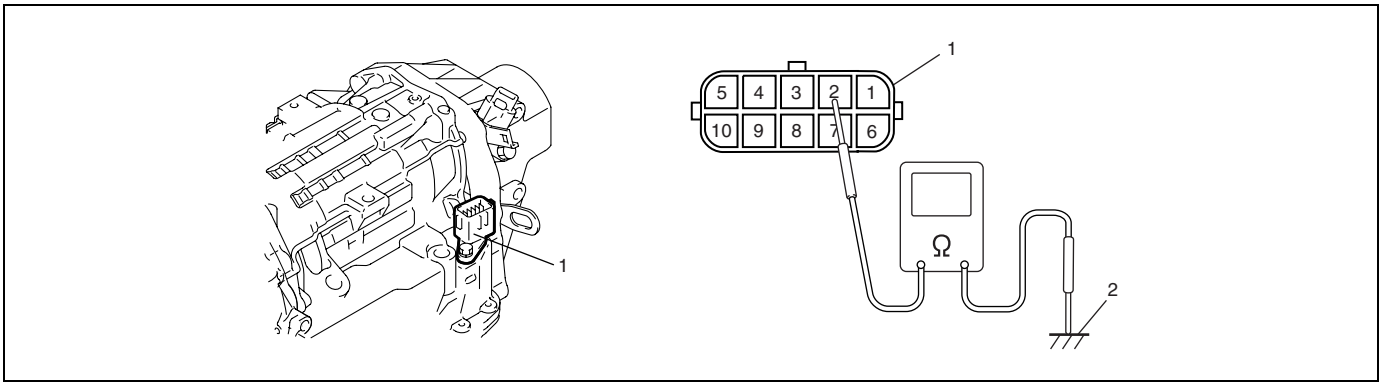

1. Valve body harness connector on transmission
2. Ground (Transmission)

DTC P0788 (No.13) Shift / Timing Solenoid Control Circuit High

Wiring Diagram

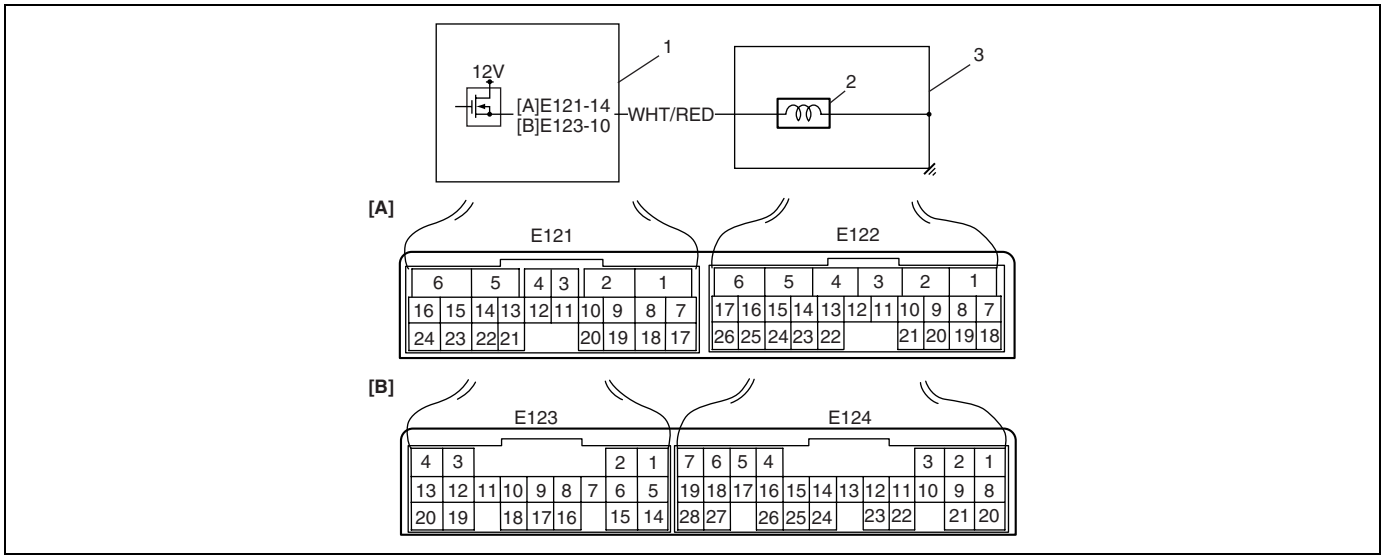

1. TCM	[A]: Terminal arrangement of TCM connector (M13 engine model with VVT) (viewed from harness side)
2. Timing solenoid valve	[B]: Terminal arrangement of TCM connector (M13 engine model without VVT) (viewed from harness side)
3. A/T	

DTC Detecting Condition and Trouble Area

DTC DETECTING CONDITION	TROUBLE AREA
Voltage of timing solenoid valve TCM terminal is high although TCM is commanding timing solenoid valve to turn OFF.	• Timing solenoid valve circuit open or shorted to power circuit. • Timing solenoid valve malfunction. • TCM

DTC Confirmation Procedure

1) Connect scan tool to DLC with ignition switch OFF.
2) Clear DTC in TCM memory.
3) Start engine and shift selector lever to “N” range.
4) Repeat shifting selector lever from “N” range to “D” range and vice versa for 3 times.
5) Check DTC.

Troubleshooting

Step	Action	Yes	No
1	Was “Automatic Transmission Diagnostic Flow” performed?	Go to Step 2.	Go to “Automatic Transmission Diagnostic Flow” in this section.
2	Check Timing Solenoid Valve Circuit for IG Short 1) Turn ignition switch ON and measure voltage between terminal “E121-14” [A] or “E123-10” [B] of harness side TCM connector and ground. Is it 0 – 1 V?	Go to Step 3.	“WHT/GRN” circuit shorted to power circuit.
3	Check Timing Solenoid Valve Circuit for Open 1) Measure resistance between terminal “E121-14” [A] or “E123-10” [B] of disconnected harness side TCM connector and ground. Is it 11 – 15 V at 20 °C (68 °F)?	Intermittent trouble or faulty TCM. Check for intermittent referring to “Intermittent and Poor Connection Inspection” in Section 0A. If OK, substitute a known-good TCM and recheck.	Go to Step 4.
4	Check Timing Solenoid Valve Resistance 1) Turn ignition switch OFF. 2) Disconnect valve body harness connector on transmission. 3) Check for proper connection to solenoid valve at “WHT/RED” circuit. 4) Check resistance of solenoid valve. See Fig. Resistance between terminal of transmission side valve body harness connector and transmission: 11 – 15 Ω (at 20 °C (68 °F)) Is check result satisfactory?	“WHT/RED” circuit open.	Replace timing solenoid valve or lead wire.

Fig. for Step 4

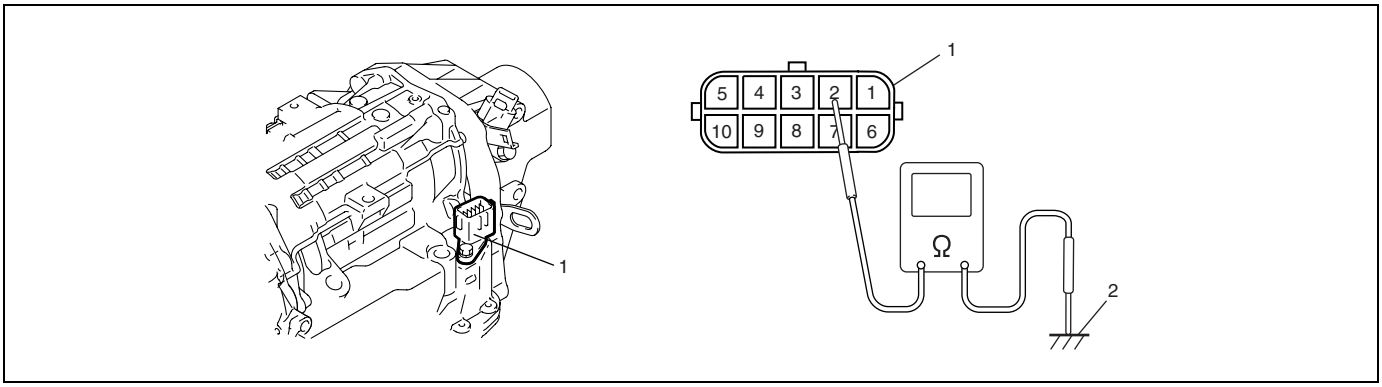

1. Valve body harness connector on transmission
2. Ground (Transmission)

DTC P0962 (No.41) Pressure Control Solenoid Control Circuit Low

Wiring Diagram

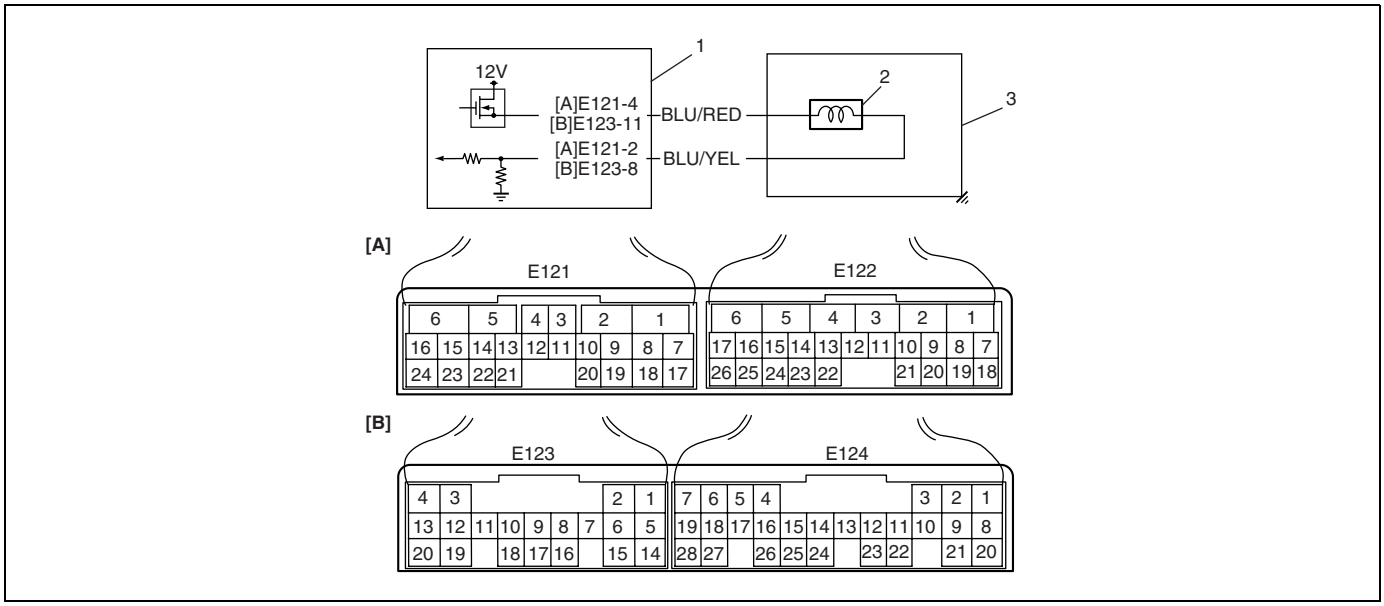

1. TCM	[A]: Terminal arrangement of TCM connector (M13 engine model with VVT) (viewed from harness side)
2. Pressure control solenoid valve	[B]: Terminal arrangement of TCM connector (M13 engine model without VVT) (viewed from harness side)
3. A/T	

DTC Detecting Condition and Trouble Area

DTC DETECTING CONDITION	TROUBLE AREA
Pressure control solenoid valve output voltage is too low comparing with TCM command value.	• Pressure control solenoid valve circuit open or shorted to ground. • Malfunction of pressure control solenoid valve • TCM

DTC Confirmation Procedure

1) Connect scan tool to DLC with ignition switch OFF.
2) Clear DTC in TCM memory.
3) Start engine.
4) Keep engine running at idle speed for 30 seconds or more.
5) Stop vehicle and check DTC.

DTC Troubleshooting

Step	Action	Yes	No
1	Was “Automatic Transmission Diagnostic Flow Table” performed?	Go to Step 2.	Go to “Automatic Transmission Diagnostic Flow Table” in this section.

Step	Action	Yes	No
2	Check Pressure Control Solenoid Valve Resistance 1) Turn ignition switch OFF 2) Disconnect valve body harness connector on automatic transmission. 3) Check for proper connection to solenoid at "BLU/RED" and "BLU/YEL" circuit. 4) Check resistance of pressure control solenoid. See Fig. Resistance between pressure control solenoid valve terminals of transmission side valve body harness connector: 5.0 – 5.6 Ω (at 20 °C (68 °F)) Resistance between pressure control solenoid valve terminals of transmission side valve body harness connector and transmission body: Infinity Is check results satisfactory?	Go to Step 3.	Replace pressure control solenoid valve or valve body harness.
3	Check Pressure Control Solenoid Valve Circuit for Ground Short 1) Connect valve body harness connector. 2) Disconnect TCM connectors. 3) Check for proper connection to TCM at terminals "E121-2" and "E121-4" [A] or "E123-8" and "E123-11" [B]. If connection is OK, check continuity between terminal "E121-4" [A] or "E123-8" [B] of disconnected harness side TCM connector and ground. Is continuity indicated?	"BLU/RED" or "BLU/YEL" circuit shorted to ground.	Go to Step 4.
4	Check Pressure Control Solenoid Valve Circuit for Open 1) Check resistance between terminals "E121-2" and "E121-4" [A] or "E123-8" and "E123-11" [B] of disconnected harness side TCM connector. Is it infinity?	"BLU/RED" or "BLU/YEL" circuit open.	Intermittent trouble or faulty TCM. Check for intermittent referring to "Intermittent and Poor Connection" in Section 0A. If OK, substitute a known-good TCM and recheck

Fig. for Step 2.

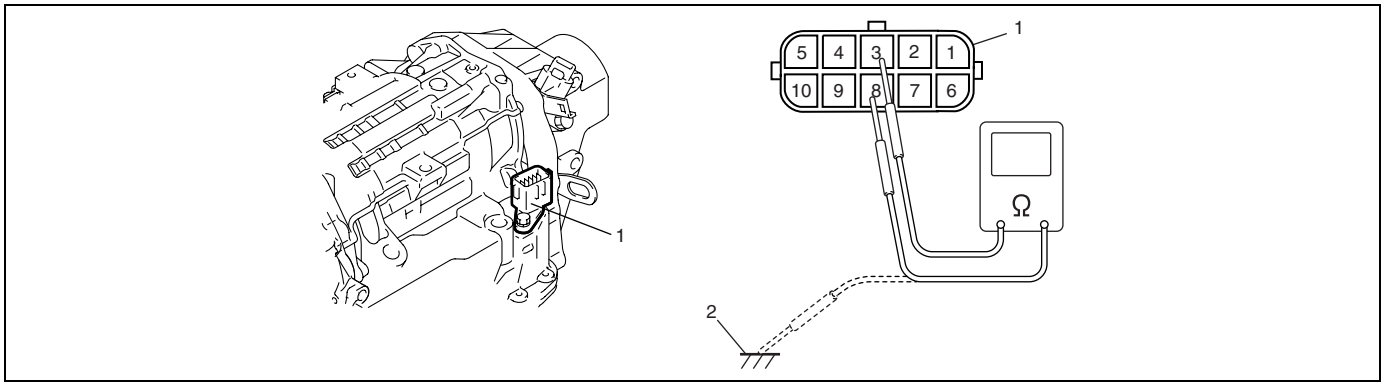

1. Valve body harness connector on transmission
2. Ground (transmission)

DTC P0963 (No.42) Pressure Control Solenoid Control Circuit High

Wiring Diagram

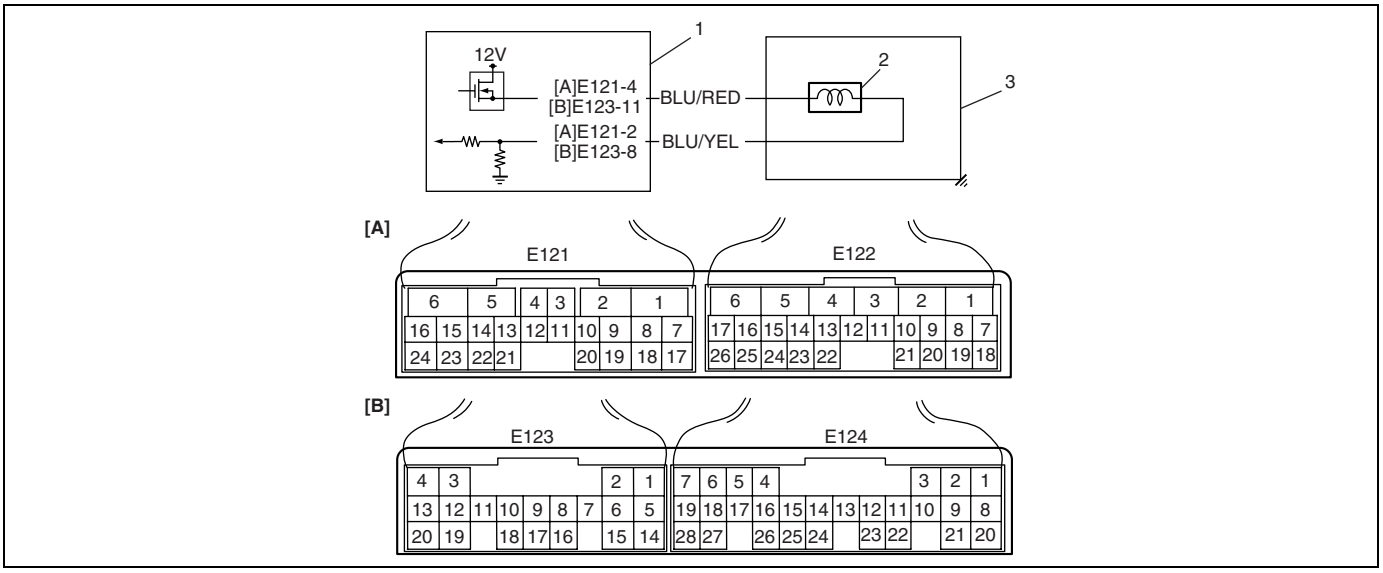

1. TCM	[A]: Terminal arrangement of TCM connector (M13 engine model with VVT) (viewed from harness side)
2. Pressure control solenoid valve	[B]: Terminal arrangement of TCM connector (M13 engine model without VVT) (viewed from harness side)
3. A/T	

DTC Detecting Condition and Trouble Area

DTC DETECTING CONDITION	TROUBLE AREA
Pressure control solenoid valve output voltage is too high comparing with TCM command value.	• Pressure control solenoid valve circuit shorted to power circuit. • Pressure control solenoid valve malfunction • TCM

DTC Confirmation Procedure

1) Connect scan tool to DLC with ignition switch OFF.
2) Clear DTC in TCM memory.
3) Start engine.
4) Keep engine running at idle speed for 10 seconds or more.
5) Check DTC.

DTC Troubleshooting

Step	Action	Yes	No
1	Was “Automatic Transmission Diagnostic Flow Table” performed?	Go to Step 2.	Go to “Automatic Transmission Diagnostic Flow Table” in this section.

Step	Action	Yes	No
2	Check Pressure Control Solenoid Circuit for IG Short 1) Connect valve body harness connector. 2) Disconnect TCM connectors. 3) Check for proper connection to TCM at terminal “E121-2” and “E121-4” [A] or “E123-8” and “E123-11” [B]. 4) If connection is OK, turn ignition switch ON and measure voltage between terminal “E121-4” [A] or “E123-11” [B] of disconnected harness side TCM connector and ground. Is it 0 – 2 V?	Go to Step 3.	“BLU/RED” or “BLU/YEL” circuit shorted to power circuit.
3	Check Pressure Control Solenoid Valve Resistance 1) Turn ignition switch OFF. 2) Disconnect valve body harness connector on automatic transmission. 3) Check for proper connection to solenoid at “BLU/RED” and “BLU/YEL” circuit. 4) Check resistance of pressure control solenoid. See Fig. Resistance between pressure control solenoid valve terminals of transmission side valve body harness connector: 5.0 – 5.6 Ω (at 20 °C (68 °F)) Resistance between pressure control solenoid valve terminals of transmission side valve body harness connector and transmission body: Infinity Is check results satisfactory?	Intermittent trouble or faulty TCM. Check for intermittent referring to “Intermittent and Poor Connection” in Section 0A. If OK, substitute a known-good TCM and recheck.	Replace pressure control solenoid valve or valve body harness.

Fig. for Step 3.

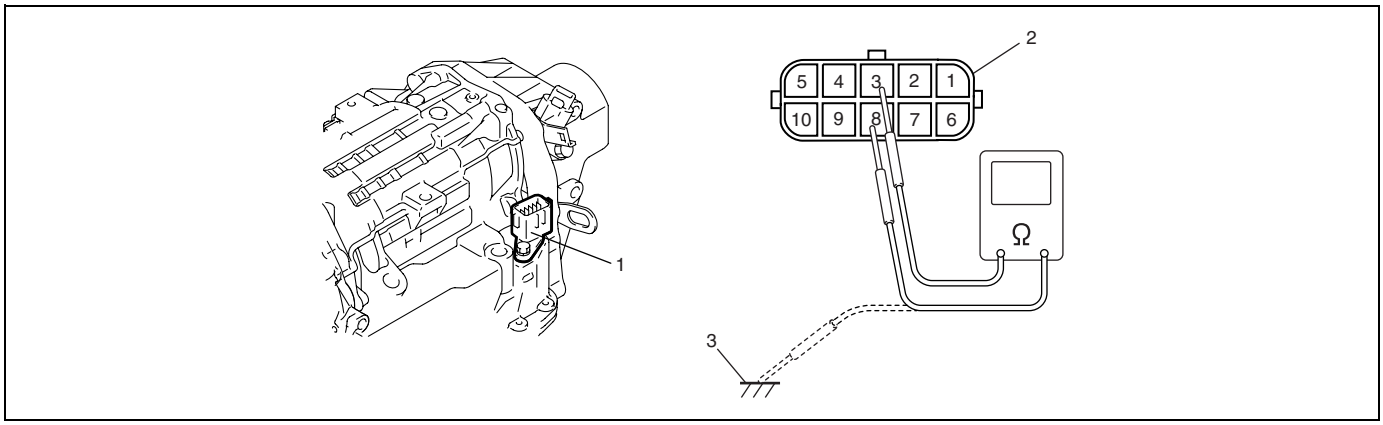

1. Valve body harness connector on transmission
2. Valve body harness connector on harness
3. Ground (transmission)

DTC P0973 (No.22) / P0976 (No.24) Shift Solenoid-A (No.1) Control Circuit High / Shift Solenoid-B (No.2) Control Circuit Low

Wiring Diagram

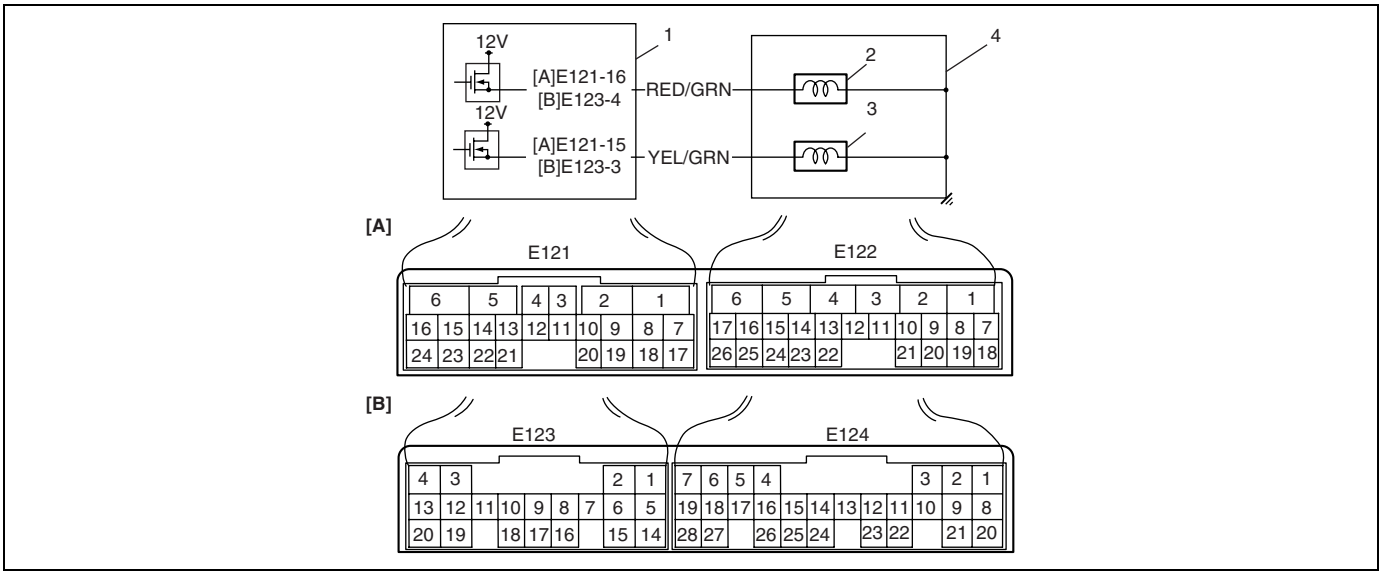

1. TCM	4. A/T
2. Shift solenoid valve-A (No.1)	[A]: Terminal arrangement of TCM connector (M13 engine model with VVT) (Viewed from harness side)
3. Shift solenoid valve-B (No.2)	[B]: Terminal arrangement of TCM connector (M13 engine model without VVT) (Viewed from harness side)

DTC Detecting Condition and Trouble Area

DTC DETECTING CONDITION	TROUBLE AREA
Voltage of shift solenoid valve TCM terminal is high although TCM is commanding shift solenoid to turn ON.	• Shift solenoid valve circuit open or shorted to power circuit. • Malfunction of shift solenoid valve • TCM

DTC Confirmation Procedure

WARNING:
- **When performing a road test, select a place where there is no traffic or possibility of a traffic accident and be very careful during testing to avoid occurrence of an accident.**
- **Road test should be carried out with 2 persons, a driver and tester, on a level road.**

1) Connect scan tool to DLC with ignition switch OFF.
2) Clear DTC in TCM memory.
3) Start engine shift select lever to “D” range.
4) Start vehicle and increase vehicle speed until gear position reaches 3rd or 4th gear.
5) Decrease vehicle speed and stop vehicle.
6) Check DTC.

DTC Troubleshooting

Step	Action	Yes	No
1	Was “Automatic Transmission Diagnostic Flow Table” performed?	Go to Step 2.	Go to “Automatic Transmission Diagnostic Flow Table” in this section.

Step	Action	Yes	No
2	Check Shift Solenoid Valve Resistance 1) Turn ignition switch OFF. 2) Disconnect valve body harness connector on automatic transmission. 3) Check for proper connection to solenoid at "RED/GRN" (for shift solenoid valve-A (No.1)) or "YEL/GRN" (for shift solenoid valve-B (No.2)) circuit. Check resistance of solenoid valve. See Fig. Resistance between shift solenoid valve-A (No.1) terminal and transmission: 11 – 15 Ω at 20 °C? (68 °F) Resistance between shift solenoid valve-B (No.2) terminal and transmission: 11 – 15 Ω at 20 °C? (68 °F) Is check results satisfactory?	Go to step 3.	Replace applicable shift solenoid valve or valve body harness.
3	Check Shift Solenoid Valve Circuit for Ground Short 1) Disconnect TCM connectors. 2) Check for proper connection to TCM at terminal "E121-16" [A] or "E123-4" [B] (for shift solenoid valve-A (No.1)) or "E121-15" [A] or "E123-3" [B] (for shift solenoid valve-B (No.2)). 3) If connection is OK, check continuity between terminal "E121-16" [A] or "E123-4" [B] (for shift solenoid valve-A (No.1)) or "E121-15" [A] or "E123-3" [B] (for shift solenoid valve-B (No.2)) of disconnected harness side TCM connector and ground. Is continuity indicated?	DTC P0973: "RED/GRN" circuit shorted to ground. DTC P0976: "YEL/GRN" circuit shorted to ground.	Intermittent trouble or faulty TCM. Check for intermittent referring to "Intermittent and Poor Connection" in Section 0A. If OK, substitute a known-good TCM and recheck.

Fig. for Step 3.

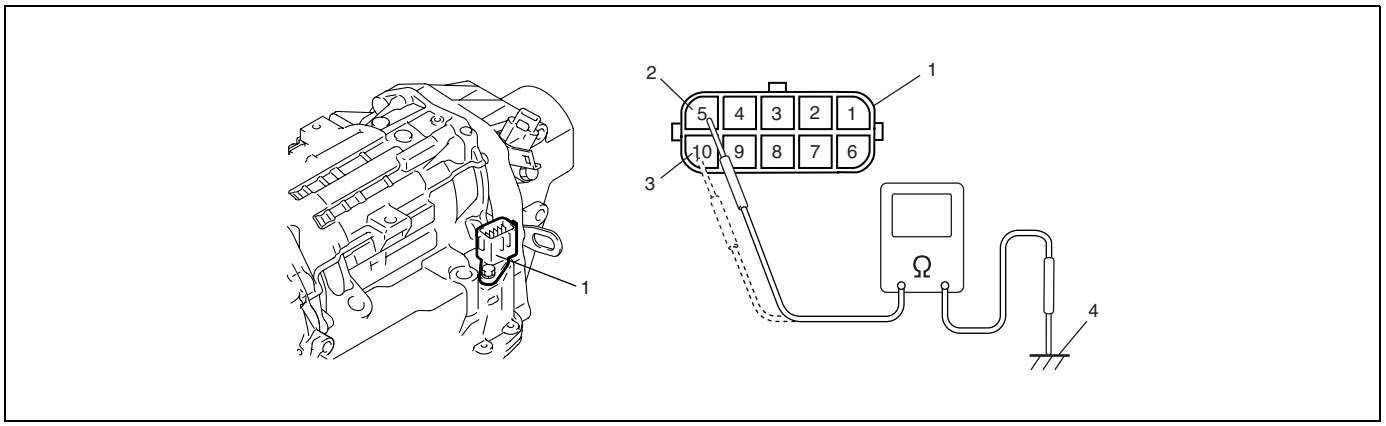

1. Valve body harness connector on transmission
2. Shift solenoid valve-A (No.1) terminal
3. Shift solenoid valve-B (No.2) terminal
4. Ground (transmission)

DTC P0974 (No.21) / P0977 (No.23) Shift Solenoid-A (No.1) Control Circuit High / Shift Solenoid-B (No.2) Control Circuit High

Wiring Diagram

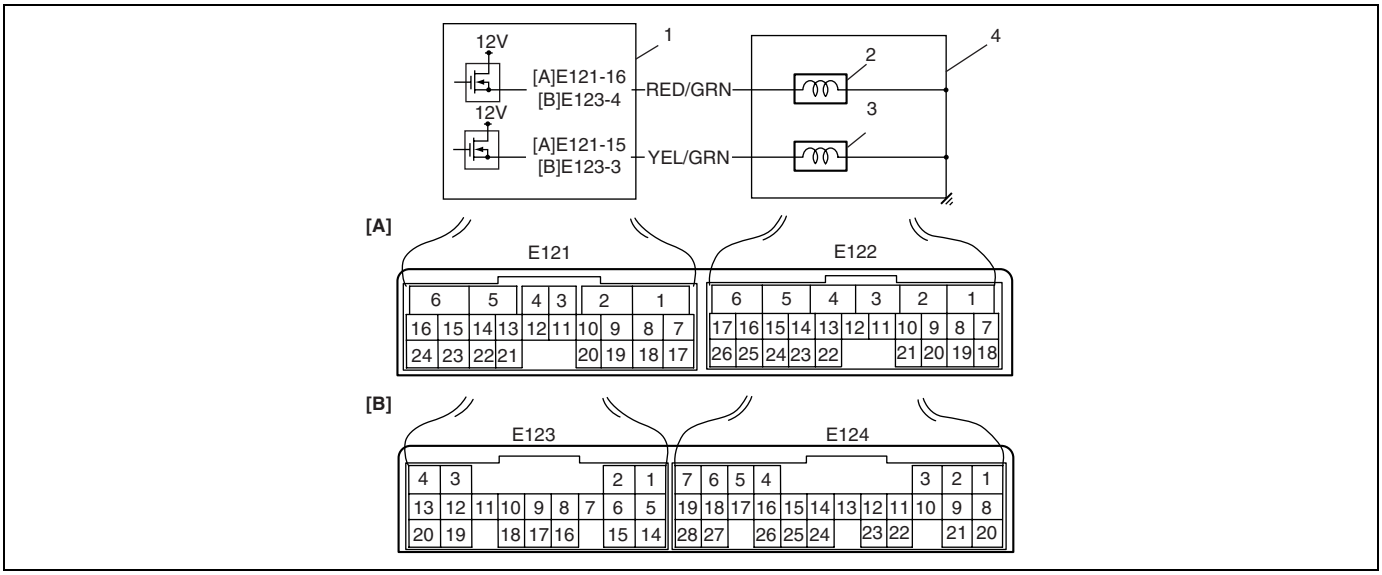

1. TCM	4. A/T
2. Shift solenoid valve-A (No.1)	[A]: Terminal arrangement of TCM connector (M13 engine model with VVT) (Viewed from harness side)
3. Shift solenoid valve-B (No.2)	[B]: Terminal arrangement of TCM connector (M13 engine model without VVT) (Viewed from harness side)

DTC Detecting Condition and Trouble Area

DTC DETECTING CONDITION	TROUBLE AREA
Voltage of shift solenoid valve TCM terminal is high although TCM is commanding shift solenoid to turn OFF.	• Shift solenoid valve circuit open or shorted to power circuit. • Malfunction of shift solenoid valve • TCM

DTC Confirmation Procedure

WARNING:
- **When performing a road test, select a place where there is no traffic or possibility of a traffic accident and be very careful during testing to avoid occurrence of an accident.**
- **Road test should be carried out with 2 persons, a driver and tester, on a level road.**

1) Connect scan tool to DLC with ignition switch OFF.
2) Clear DTC in TCM memory.
3) Start engine shift select lever to “D” range.
4) Start vehicle and increase vehicle speed until gear position reaches 3rd or 4th gear.
5) Decrease vehicle speed and stop vehicle.
6) Check DTC.

DTC Troubleshooting

Step	Action	Yes	No
1	Was “Automatic Transmission Diagnostic Flow Table” performed?	Go to Step 2.	Go to “Automatic Transmission Diagnostic Flow Table” in this section.

Step	Action	Yes	No
2	Check Shift Solenoid Valve Circuit for IG Short 1) Connect valve body harness connector. 2) Disconnect TCM connectors. 3) Check for proper connection to TCM at terminal “E121-16” [A] or “E123-4” [B] (for shift solenoid valve-A (No.1)) or “E121-15” [A] or “E123-3” [B] (for shift solenoid valve-B (No.2)). 4) If connection is OK, turn ignition switch ON and measure voltage between terminal “E121-16” [A] or “E123-4” [B] (for shift solenoid valve-A (No.1)) or “E121-15” [A] or “E123-3” [B] (for shift solenoid valve-B (No.2)) of disconnected harness side TCM connector and ground. Is it 0 – 2 V?	Go to Step 3.	DTC P0974: “RED/GRN” circuit shorted to power circuit. DTC P0977: “YEL/GRN” circuit shorted to power circuit.
3	Check Shift Solenoid Valve Resistance 1) Turn ignition switch OFF. 2) Disconnect valve body harness connector on automatic transmission. 3) Check for proper connection to solenoid at “RED/GRN” (for shift solenoid valve-A (No.1)) or “YEL/GRN” (for shift solenoid valve-B (No.2)) circuit. Check resistance of solenoid valve. See Fig. Resistance between shift solenoid valve-A (No.1) terminal and transmission: 11 – 15 Ω at 20 °C (68 °F)? Resistance between shift solenoid valve-B (No.2) terminal and transmission: 11 – 15 Ω at 20 °C (68 °F)? Is check results satisfactory?	Intermittent trouble or faulty TCM. Check for intermittent referring to “Intermittent and Poor Connection” in Section 0A. If OK, substitute a known-good TCM and recheck.	Replace applicable shift solenoid valve or valve body harness.

Fig. for Step 3.

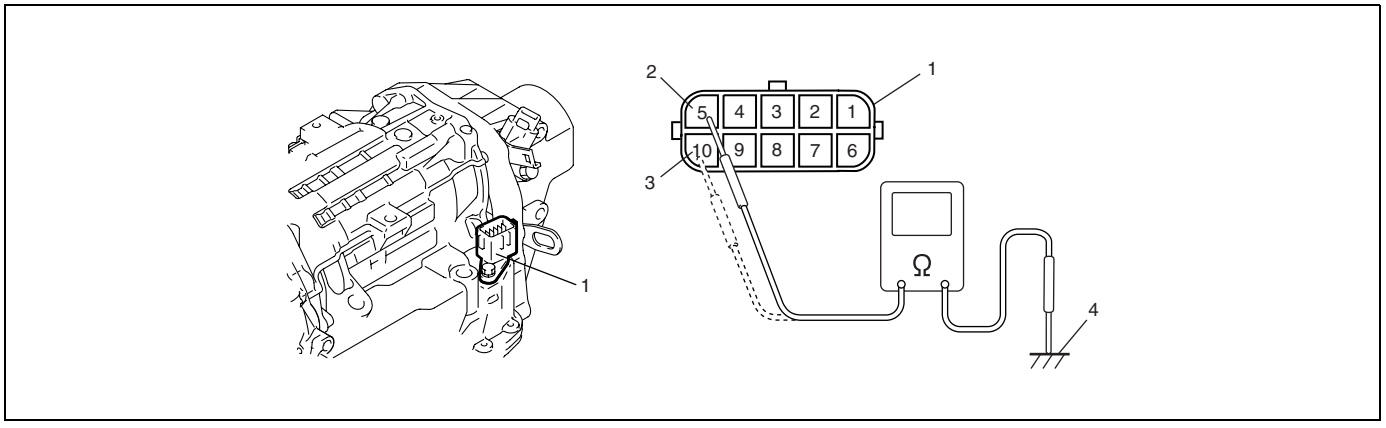

1. Valve body harness connector on transmission
2. Shift solenoid valve-A (No.1) terminal
3. Shift solenoid valve-B (No.2) terminal
4. Ground (transmission)

DTC P1702 (No.52) Internal Control Module Memory Check Sum Error

DTC Detecting Condition and Trouble Area

DTC DETECTING CONDITION	TROUBLE AREA
Calculation of current data stored in TCM is not correct comparing with pre-stored checking data in TCM.	TCM

DTC Confirmation Procedure

1) Connect scan tool to DLC with ignition switch OFF.
2) Clear DTC in TCM memory.
3) After 10 seconds passed from turning ignition switch ON, check DTC.

Troubleshooting

Step	Action	Yes	No
1	Is DTC P1702 detected after performing “DTC Confirmation Procedure”?	Faulty TCM. Replace TCM.	Could be a temporary malfunction of TCM.

DTC P1703 (No.86) CAN Invalid Data from Other ECU (M13 Engine Model with VVT)

DTC Detecting Condition and Trouble Area

When abnormality either on the gear shift control signal from ECM is detected by TCM, TCM sets DTC P1703.

DTC Troubleshooting

Step	Action	Yes	No
1	Was “Automatic Transmission Diagnostic Flow Table” performed?	Go to Step 2.	Go to “Automatic Transmission Diagnostic Flow Table” in this section.
2	DTC check. Check DTC of ECM referring to “DTC check” in Section 6. Is there any DTC(s)?	Go to applicable DTC diag. flow.	Substitute a known-good TCM and recheck. If OK, substitute a known-good ECM and recheck.

DTC P1705 (No.51) Engine Coolant Temperature Signal Circuit Malfunction (M13 Engine Model without VVT)

Wiring Diagram

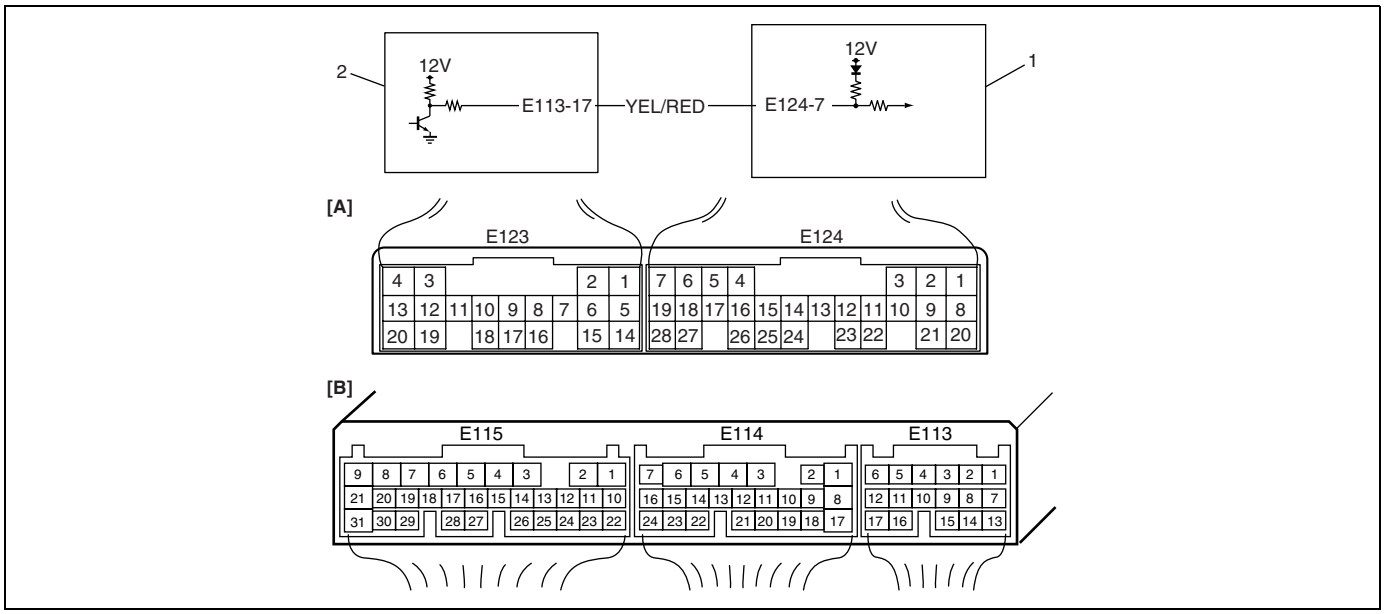

1. TCM	[A]: Terminal arrangement of TCM connector (viewed from harness side)
2. ECM	[B]: Terminal arrangement of ECM connector (viewed from harness side)

DTC Detecting Condition and Trouble Area

DTC DETECTING CONDITION	TROUBLE AREA
• Too long high signal of pulse signal from ECM to TCM continues out of specification. or • Too long low signal of pulse signal from ECM to TCM continues out of specification. or • Too short low signal of pulse signal from ECM to TCM is detected in continues 8 pulses.	• Engine coolant temperature sensor or its circuit malfunction. • Engine coolant temperature signal circuit from ECM to TCM open or short. • TCM • ECM

DTC Confirmation Procedure

1) Connect scan tool to DLC with ignition switch OFF.
2) Clear DTCs in TCM and ECM memories.
3) After 2 minutes passed from turning ignition switch ON, check DTC.

Troubleshooting

Step	Action	Yes	No
1	Was “Automatic Transmission Diagnostic Flow Table” performed?	Go to Step 2.	Go to “Automatic Transmission Diagnostic Flow Table” in this section.
2	Is there DTC related to engine coolant temperature sensor (P0115)?	Go to corresponding DTC Flow Table in Section 6.	Go to Step 3.

Step	Action	Yes	No
3	Check Engine Coolant Temperature Signal Circuit for IG Short. 1) Turn ignition switch OFF. 2) Disconnect TCM and ECM connectors from TCM and ECM. 3) Check proper connection to TCM at terminal "E124-7" and to ECM at terminal "E113-17". 4) If OK, turn ignition switch ON and measure voltage between terminal "E124-7" of disconnected harness side TCM connector and ground. Is it 10 – 14 V?	"YEL/RED" circuit shorted to power circuit.	Go to Step 4.
4	Check Engine Coolant Temperature Signal Circuit for Open. 1) Turn ignition switch OFF. 2) Check continuity between terminal "E124-7" of disconnected harness side TCM connector and terminal "E113-17" of disconnected harness side ECM connector. Is continuity indicated?	Go to Step 5.	"GRY/BLK" circuit open.
5	Check Engine Coolant Temperature Signal Circuit for Ground Short. Check continuity between terminal "E124-7" of disconnected harness side TCM connector and ground. Is continuity indicated?	"YEL/RED" circuit shorted to ground.	Go to Step 6.
6	Inspect Engine Coolant Temperature Sensor. Inspect engine coolant temperature sensor referring to "Engine Coolant Temperature Sensor Inspection" in Section 6E. Is inspection result OK?	Intermittent trouble or faulty TCM or ECM. Check for intermittent referring to "Intermittent and Poor Connection" in Section 0A. If OK, substitute a known-good TCM or ECM and recheck.	Replace engine coolant temperature sensor.

DTC P1724 (No.33) Throttle Position Signal Circuit Low (M13 Engine Model without VVT)

Wiring Diagram

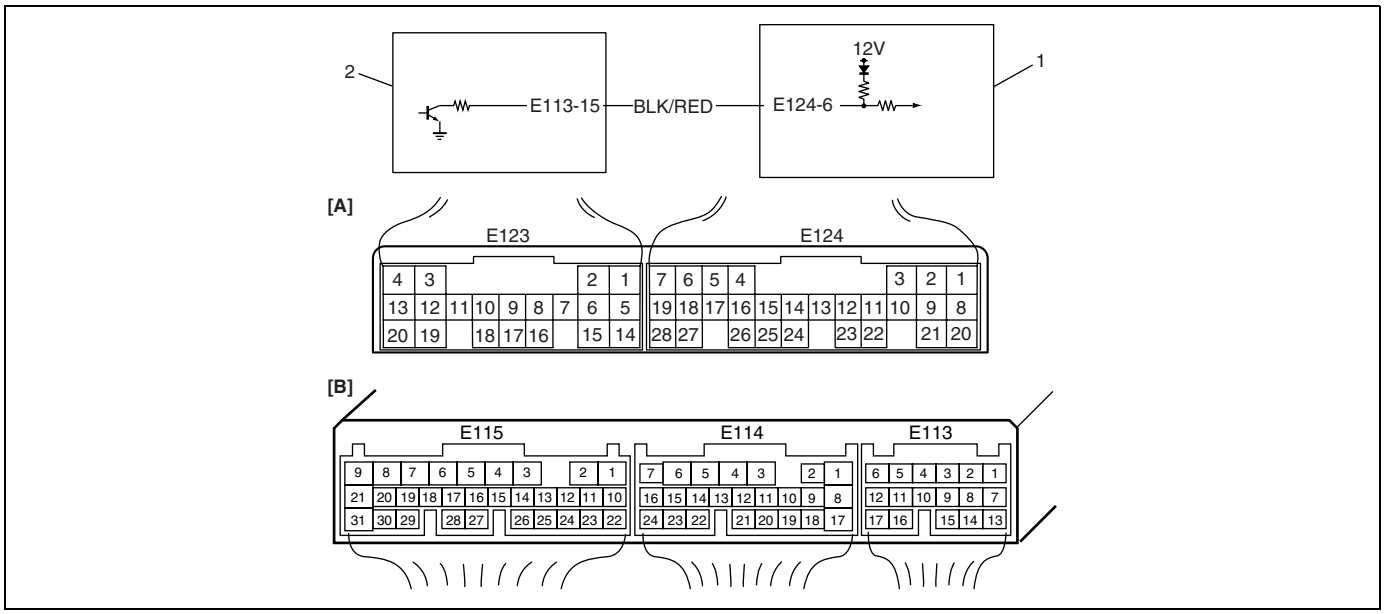

1. TCM	[A]: Terminal arrangement of TCM connector (viewed from harness side)
2. ECM	[B]: Terminal arrangement of ECM connector (viewed from harness side)

DTC Detecting Condition and Trouble Area

DTC DETECTING CONDITION	TROUBLE AREA
Too short low signal of pulse signal from ECM to TCM continues out of specification.	• Throttle position sensor or its circuit malfunction. • Throttle position signal circuit from ECM to TCM short to ground. • TCM • ECM

DTC Confirmation Procedure

1) Connect scan tool to DLC with ignition switch OFF.
2) Clear DTCs in TCM and ECM memories.
3) Turn ignition switch ON.
4) Depress accelerator pedal fully and keep it for 10 seconds.
5) Release accelerator pedal and keep it for 10 seconds.
6) Check DTC.

Troubleshooting

Step	Action	Yes	No
1	Was “Automatic Transmission Diagnostic Flow Table” performed?	Go to Step 2.	Go to “Automatic Transmission Diagnostic Flow Table” in this section.
2	Is there DTC related to throttle position sensor (P0120)?	Go to corresponding DTC Flow Table in Section 6.	Go to Step 3.

Step	Action	Yes	No
3	Check Throttle Position Signal Circuit for Ground Short. Check continuity between terminal “E124-6” of disconnected harness side TCM connector and ground. Is continuity indicated?	“BLK/RED” circuit shorted to ground.	Intermittent trouble or faulty TCM or ECM. Check for intermittent referring to “Intermittent and Poor Connection” in Section 0A. If OK, substitute a known-good TCM or ECM and recheck.

DTC P1725 (No.32) Throttle Position Signal Circuit High (M13 Engine Model without VVT)

Wiring Diagram

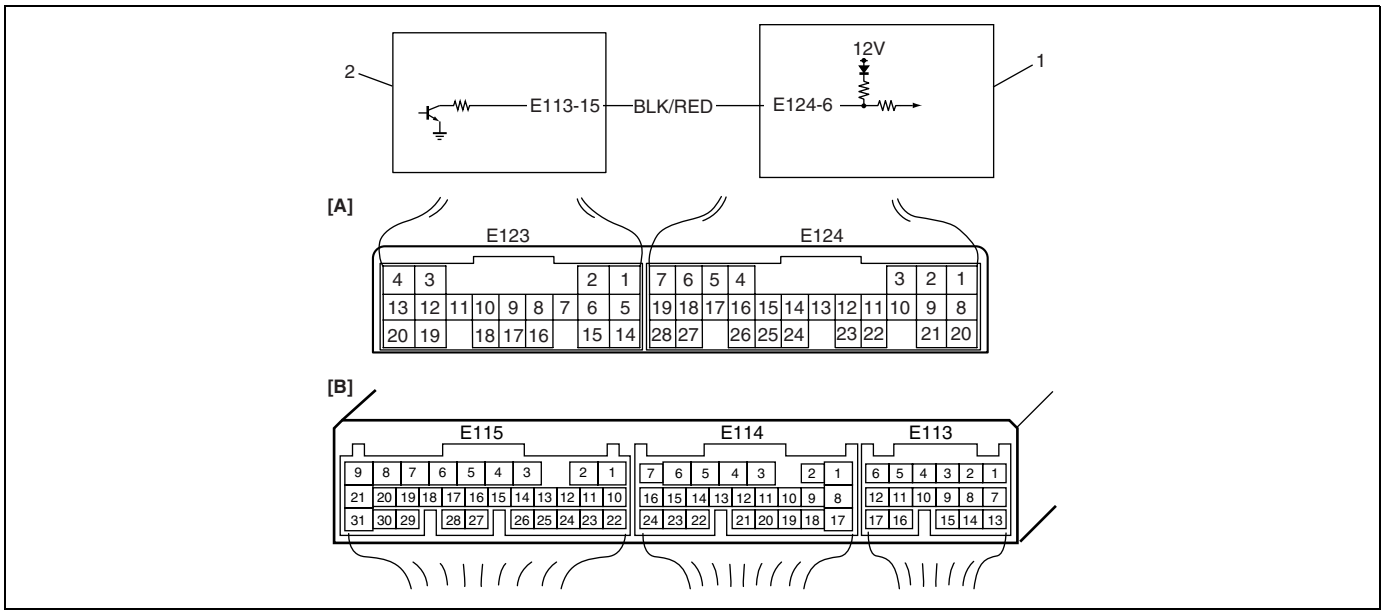

1. TCM	[A]: Terminal arrangement of TCM connector (viewed from harness side)
2. ECM	[B]: Terminal arrangement of ECM connector (viewed from harness side)

DTC Detecting Condition and Trouble Area

DTC DETECTING CONDITION	TROUBLE AREA
Too long low signal of pulse signal from ECM to TCM continues out of specification.	• Throttle position sensor or its circuit malfunction. • Throttle position signal circuit from ECM to TCM open or shorted to power circuit. • TCM • ECM

DTC confirmation procedure

1) Connect scan tool to DLC with ignition switch OFF.
2) Clear DTCs in TCM and ECM memories.
3) Turn ignition switch ON.
4) Depress accelerator pedal fully and keep it for 10 seconds.
5) Release accelerator pedal and keep it for 10 seconds.
6) Check DTC.

Troubleshooting

Step	Action	Yes	No
1	Was “Automatic Transmission Diagnostic Flow Table” performed?	Go to Step 2.	Go to “Automatic Transmission Diagnostic Flow Table” in this section.
2	Is there DTC related to throttle position sensor (P0120)?	Go to corresponding DTC Flow Table in Section 6.	Go to Step 3.

Step	Action	Yes	No
3	Check Throttle Position Signal Circuit for IG Short. 1) Turn ignition switch OFF. 2) Disconnect TCM and ECM connectors from TCM and ECM. 3) Check proper connection to TCM at terminal "E124-6" and to ECM at terminal "E113-15". 4) If OK, turn ignition switch ON and measure voltage between terminal "E124-6" of disconnected harness side TCM connector and ground. Is it 10 – 14 V?	"BLK/RED" circuit shorted to power circuit.	Go to Step 4.
4	Check Throttle Position Signal Circuit for Open. 1) Turn ignition switch OFF. 2) Check continuity between terminal "E124-6" of disconnected harness side TCM connector and terminal "E113-15" of disconnected harness side ECM connector. Is continuity indicated?	Intermittent trouble or faulty TCM or ECM. Check for intermittent referring to "Intermittent and Poor Connection" in Section 0A. If OK, substitute a known-good TCM or ECM and recheck.	"BLK/RED" circuit open.

DTC P1730 (No.64) Engine Torque Signal Circuit Malfunction (M13 Engine Model without VVT)

Wiring Diagram

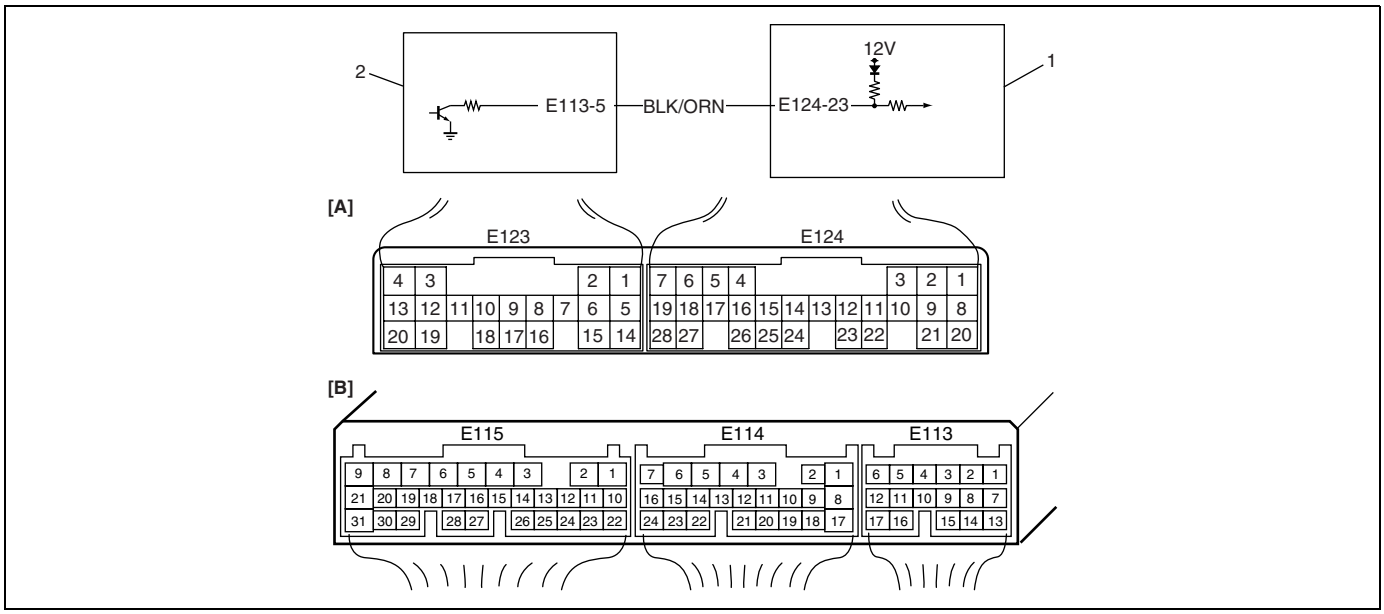

1. TCM	[A]: Terminal arrangement of TCM connector (viewed from harness side)
2. ECM	[B]: Terminal arrangement of ECM connector (viewed from harness side)

DTC Detecting Condition and Trouble Area

DTC DETECTING CONDITION	TROUBLE AREA
• Too short low signal of pulse signal from ECM to TCM continues out of specification. or • Too long low signal of pulse signal from ECM to TCM continues out of specification.	• Engine torque signal circuit malfunction. • TCM • ECM

DTC Confirmation Procedure

1) Connect scan tool to DLC with ignition switch OFF.
2) Clear DTCs in TCM and ECM memories.
3) After 1 minute passed from turning ignition switch ON, check DTC.

Troubleshooting

Step	Action	Yes	No
1	Was “Automatic Transmission Diagnostic Flow Table” performed?	Go to Step 2.	Go to “Automatic Transmission Diagnostic Flow Table” in this section.

Step	Action	Yes	No
2	Check Engine Torque Signal Circuit for IG Short. 1) Turn ignition switch OFF. 2) Disconnect TCM and ECM connectors from TCM and ECM. 3) Check proper connections to TCM at terminal "E124-23" and to ECM at terminal "E113-5". 4) If OK, turn ignition switch ON and measure voltage between terminal "E124-23" of disconnected harness side TCM connector and ground. Is it 10 – 14 V?	"BLK/ORN" circuit shorted to power circuit.	Go to Step 3.
3	Check Engine Torque Signal Circuit for Open. 1) Turn ignition switch OFF. 2) Check continuity between terminal "E124-23" of disconnected harness side TCM connector and terminal "E113-5" of disconnected harness side ECM connector. Is continuity indicated?	Go to Step 4.	"BLK/ORN" circuit open.
4	Check Engine Torque Signal Circuit for Ground Short. Check continuity between terminal "E124-23" of disconnected harness side TCM connector and ground. Is continuity indicated?	"BLK/ORN" circuit shorted to ground.	Intermittent trouble or faulty TCM or ECM. Check for intermittent referring to "Intermittent and Poor Connection" in Section 0A. If OK, substitute a known-good TCM or ECM and recheck.

DTC P1735 (No.56) Air Conditioner Signal Circuit Malfunction (M13 Engine Model without VVT)

Wiring Diagram

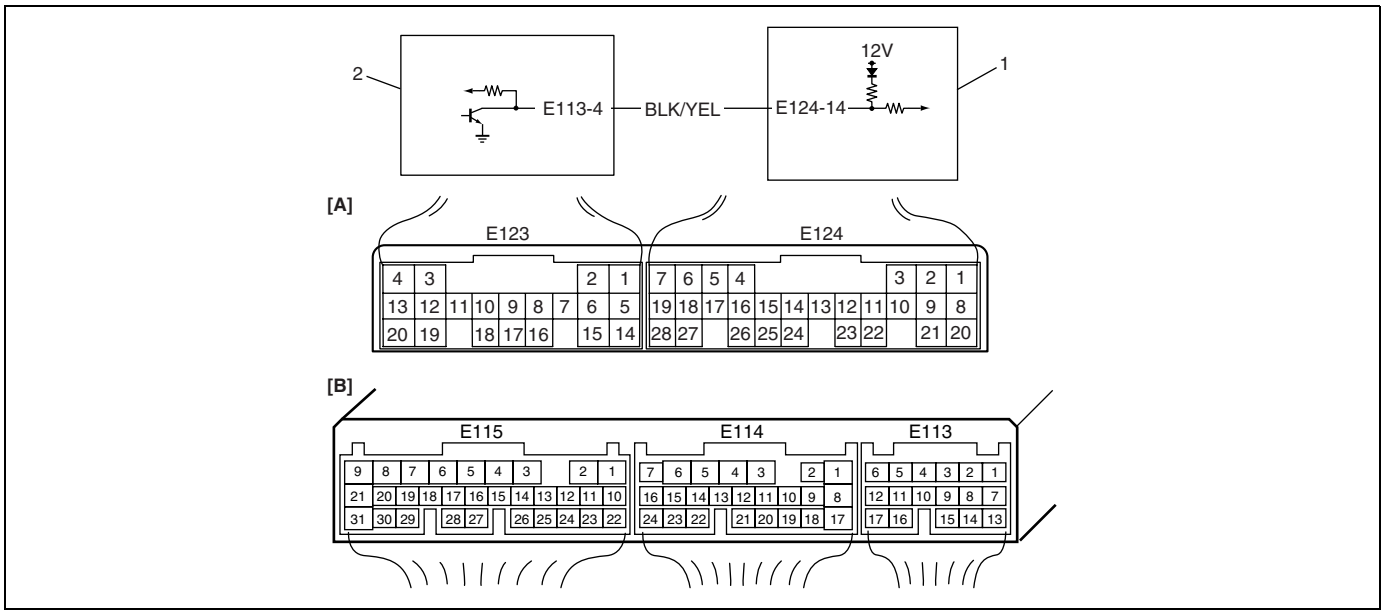

1. TCM	[A]: Terminal arrangement of TCM connector (viewed from harness side)
2. ECM	[B]: Terminal arrangement of ECM connector (viewed from harness side)

DTC Detecting Condition and Trouble Area

DTC DETECTING CONDITION	TROUBLE AREA
• Voltage of air conditioner signal ECM terminal is low although ECM command air conditioner compressor to turn OFF. • Voltage of air conditioner signal ECM terminal is high although ECM command air conditioner compressor to turn ON.	• Air conditioner signal circuit malfunction. • TCM • ECM

DTC Confirmation Procedure

1) Connect scan tool to DLC with ignition switch OFF.
2) Clear DTCs in TCM and ECM memories.
3) Start engine and turn A/C switch ON to operate A/C compressor.
4) After 10 minute passed from starting engine, check DTC.

Troubleshooting

Step	Action	Yes	No
1	Was “Automatic Transmission Diagnostic Flow Table” performed?	Go to Step 2.	Go to “Automatic Transmission Diagnostic Flow Table” in this section.

Step	Action	Yes	No
2	Check Air Conditioner Signal Circuit for IG Short. 1) Turn ignition switch OFF. 2) Disconnect TCM and ECM connectors from TCM and ECM. 3) Check proper connections to TCM at terminal "E124-14" and to ECM at terminal "E113-4". 4) If OK, turn ignition switch ON and measure voltage between terminal "E124-14" of disconnected harness side TCM connector and ground. Is it 10 – 14 V?	"BLK/YEL" circuit shorted to power circuit.	Go to Step 3.
3	Check Air Conditioner Signal Circuit for Open. 1) Turn ignition switch OFF. 2) Check continuity between terminal "E124-14" of disconnected harness side TCM connector and terminal "E113-4" of disconnected harness side ECM connector. Is continuity indicated?	Go to Step 4.	"BLK/YEL" circuit open.
4	Check Air Conditioner Signal Circuit for Ground Short. Check continuity between terminal "E124-14" of disconnected harness side TCM connector and ground. Is continuity indicated?	"BLK/YEL" circuit shorted to ground.	Intermittent trouble or faulty TCM or ECM. Check for intermittent referring to "Intermittent and Poor Connection" in Section 0A. If OK, substitute a known-good TCM or ECM and recheck.

DTC P1774 (No.76) Control Module Communication Bus Off (M13 Engine Model with VVT)

Wiring Diagram

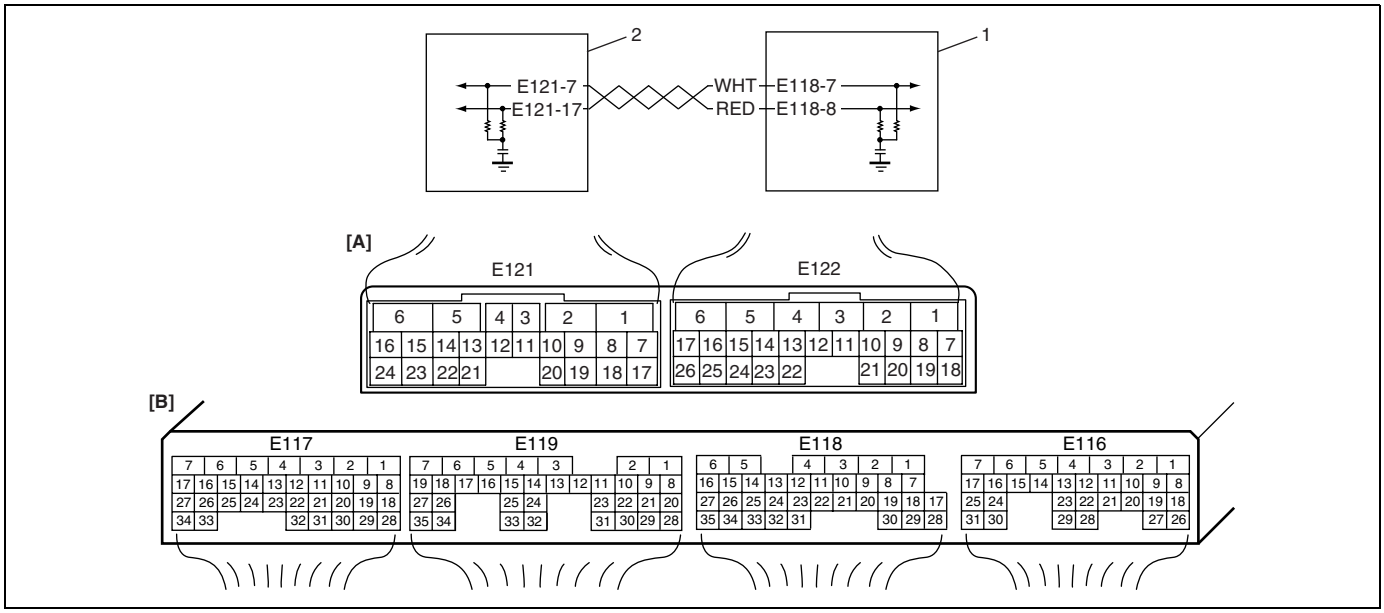

1. ECM	[A]: Terminal arrangement of TCM connector (viewed from harness side)
2. TCM	[B]: Terminal arrangement of ECM connector (viewed from harness side)

DTC Detecting Condition and Trouble Area

DTC DETECTING CONDITION	TROUBLE AREA
Transmission error that is inconsistent between transmission data and transmission monitor (CAN bus monitor) data is detected more than 7 times continuously.	• ECM • TCM • CAN circuit

DTC Confirmation Procedure

1) Connect scan tool to DLC with ignition switch OFF.
2) Clear DTCs in TCM and ECM memories.
3) Start engine and run it for 1 min. or more.
4) Check DTC.

Troubleshooting

Step	Action	Yes	No
1	Was “Automatic Transmission Diagnostic Flow Table” performed?	Go to Step 2.	Go to “Automatic Transmission Diagnostic Flow” in this section.
2	Check DTC 1) Connect scan tool to DLC with ignition switch turned OFF. 2) Check DTC for ECM and TCM. Is there any DTC(s) (other than DTC P1674, P1675, P1676 for ECM and DTC P1774, P1775, P1777 for TCM)?	Go to applicable DTC diag. flow.	Go to Step 3.

Step	Action	Yes	No
3	Check ECM and TCM connectors 1) Check for proper connection at each ECM and TCM connector terminals with ignition switch turned OFF. 2) If connections are OK, recheck DTC for ECM with engine running. Is there DTC P1774?	Go to Step 4.	Intermittent trouble. Check for intermittent referring to “Intermittent and Poor Connection Inspection” in Section 0A.
4	Check TCM Power and Ground Circuit 1) Check for TCM power and ground circuit referring to “TCM Power and Ground Circuit Check”. Is it in good condition?	Go to Step 5.	Repair TCM power and/or ground circuits.
5	Check DTC for TCM (bus off) 1) Disconnect connectors from ECM with ignition switch turned OFF. 2) Check DTC(s) for TCM. Is there DTC P1774?	Go to Step 6.	Substitute a known-good ECM and recheck.
6	Check CAN Communication Line Circuit Insulation 1) Disconnect connectors from ECM and TCM with ignition switch OFF. 2) Measure resistance between “E121-7” and “E121-17” terminals of TCM connector. Is resistance infinity?	Go to Step 7.	Repair insulation of CAN communication line circuit referring to “Precaution for CAN Communication System” in Section 0A.
7	Check CAN Communication Line Circuit Continuity 1) Measure resistance at the following connector terminals. • Between “E121-7” terminal of TCM connector and “E118-7” terminal of ECM connector • Between “E121-17” terminal of TCM connector and “E118-8” terminal of ECM connector Is each resistance below 1 Ω?	Go to Step 8.	Repair open or high resistance of CAN communication line circuit referring to “Precaution for CAN Communication System” in Section 0A.
8	Check CAN Communication Line Circuit Ground Short 1) Measure resistance at the following connector terminals. • Between “E121-7” terminal of TCM connector and vehicle body ground • Between “E121-17” terminal of TCM connector and vehicle body ground Is each resistance infinity?	Go to Step 9.	Repair shorted to ground of CAN communication line circuit referring to “Precaution for CAN Communication System” in Section 0A.
9	Check CAN Communication Line Circuit Power Supply Short 1) Measure voltage at the following connector terminals with ignition switch turned ON. • Between “E121-7” terminal of TCM connector and vehicle body ground • Between “E121-17” terminal of TCM connector and vehicle body ground Is each voltage 0 – 1 V?	Substitute a known-good TCM and recheck.	Repair shorted to power supply of CAN communication line circuit referring to “Precaution for CAN Communication System” in Section 0A.

DTC P1775 (No.76) High Speed CAN Communication Bus (Transmit Error) (M13 Engine Model with VVT)

Wiring Diagram

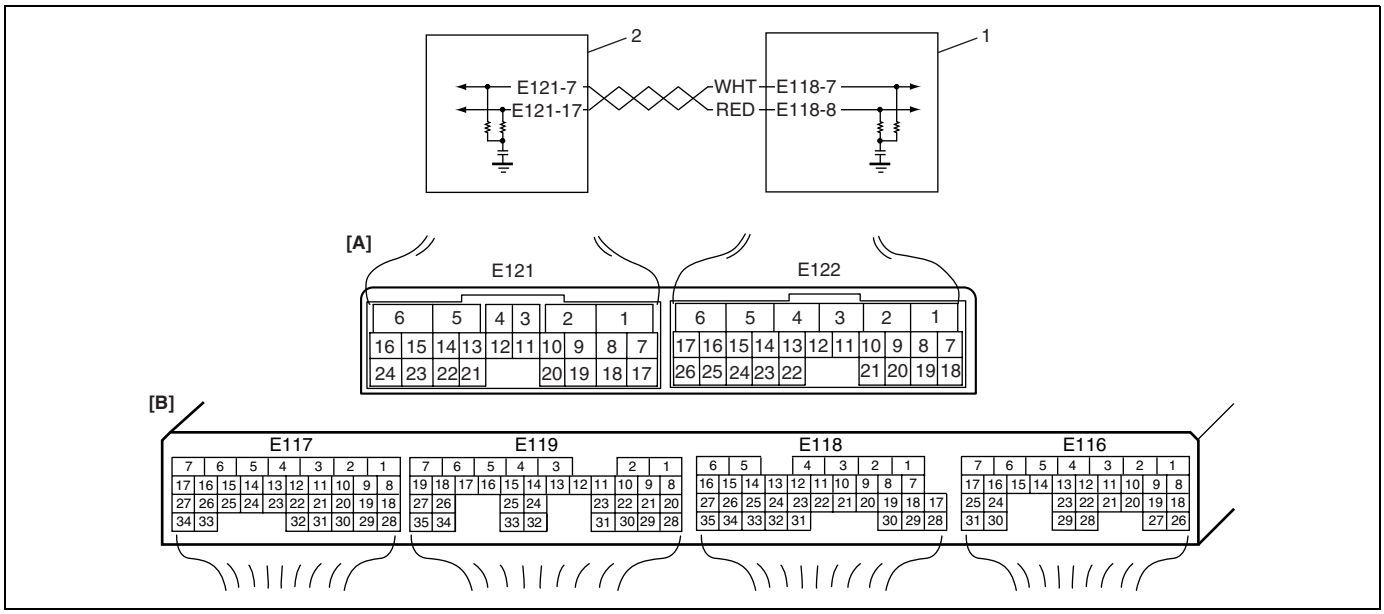

1. ECM	[A]: Terminal arrangement of TCM connector (viewed from harness side)
2. TCM	[B]: Terminal arrangement of ECM connector (viewed from harness side)

DTC Detecting Condition and Trouble Area

DTC DETECTING CONDITION	TROUBLE AREA
Transmission error of communication data for TCM is detected more than specified time continuously.	• ECM • TCM • CAN circuit

DTC Confirmation Procedure

1) Connect scan tool to DLC with ignition switch OFF.
2) Clear DTCs in TCM and ECM memories.
3) Start engine and run it for 1 min. or more.
4) Check DTC.

Troubleshooting

Step	Action	Yes	No
1	Was “Automatic Transmission Diagnostic Flow” performed?	Go to Step 2.	Go to “Automatic Transmission Diagnostic Flow” in this section.
2	Check DTC 1) Connect scan tool to DLC with ignition switch turned OFF. 2) Check DTC for ECM, TCM and BCM. Is there any DTC(s) (other than DTC P1674, P1675, P1676 for ECM and DTC P1774, P1775, P1777 for TCM)?	Go to applicable DTC diag. flow.	Go to Step 3.

Step	Action	Yes	No
3	Check CAN Communication Error for TCM 1) Check DTC for TCM. Is there DTC P1774?	Go to "DTC P1774: Control Module Communication Bus Off".	Go to Step 4.
4	Check ECM and TCM Connectors 1) Check for proper connection at each ECM and TCM connector terminals with ignition switch turned OFF. 2) If connections are OK, recheck DTC for TCM with engine running. Is there DTC P1775?	Go to Step 5.	Intermittent trouble. Check for intermittent referring to "Intermittent and Poor Connection Inspection" in Section 0A.
5	Check TCM Power and Ground Circuit 1) Check for TCM power and ground circuit referring to "TCM Power and Ground Circuit Check". Is it in good condition?	Go to Step 6.	Repair TCM power and/or ground circuits.
6	Check DTC for ECM and BCM 1) Check DTC P1674 for ECM. Is it indicated?	Go to "DTC P1674: Control Module Communication Bus Off".	Go to Step 7.
7	Check CAN Communication Line Circuit Continuity 1) Disconnect connectors from ECM and TCM with ignition switch turned OFF. 2) Measure resistance at the following connector terminals. • Between "E121-7" terminal of TCM connector and "E118-7" terminal of ECM connector • Between "E121-17" terminal of TCM connector and "E118-8" terminal of ECM connector Is each resistance below 1 Ω?	Go to Step 8.	Repair open or high resistance CAN communication line circuit referring to "Precaution for CAN Communication System" in Section 0A.
8	Check CAN Communication Line Circuit Insulation 1) Measure resistance between "E121-7" and "E121-17" terminals of TCM connector. Is resistance infinity?	Go to Step 9.	Repair insulation of CAN communication line circuit referring to "Precaution for CAN Communication System" in Section 0A.
9	Check CAN Communication Line Circuit Ground Short 1) Measure resistance at the following connector terminals. • Between "E121-7" terminal of TCM connector and vehicle body ground • Between "E121-17" terminal of TCM connector and vehicle body ground Is each resistance infinity?	Go to Step 10.	Repair shorted to ground of CAN communication line circuit referring to "Precaution for CAN Communication System" in Section 0A.

Step	Action	Yes	No
10	Check CAN Communication Line Circuit Power Supply Short 1) Measure voltage at the following connector terminals with ignition switch turned ON. • Between “E121-7” terminal of TCM connector and vehicle body ground • Between “E121-17” terminal of TCM connector and vehicle body ground Is each voltage 0 – 1 V?	Substitute a known-good TCM and recheck. If DTC is still detected, substitute a known-good ECM and recheck.	Repair shorted to power supply of CAN communication line circuit referring to “Precaution for CAN Communication System” in Section 0A.

DTC P1777 (No.76) TCM Lost Communication with ECM (Reception Error) (M13 Engine Model with VVT)

Wiring Diagram

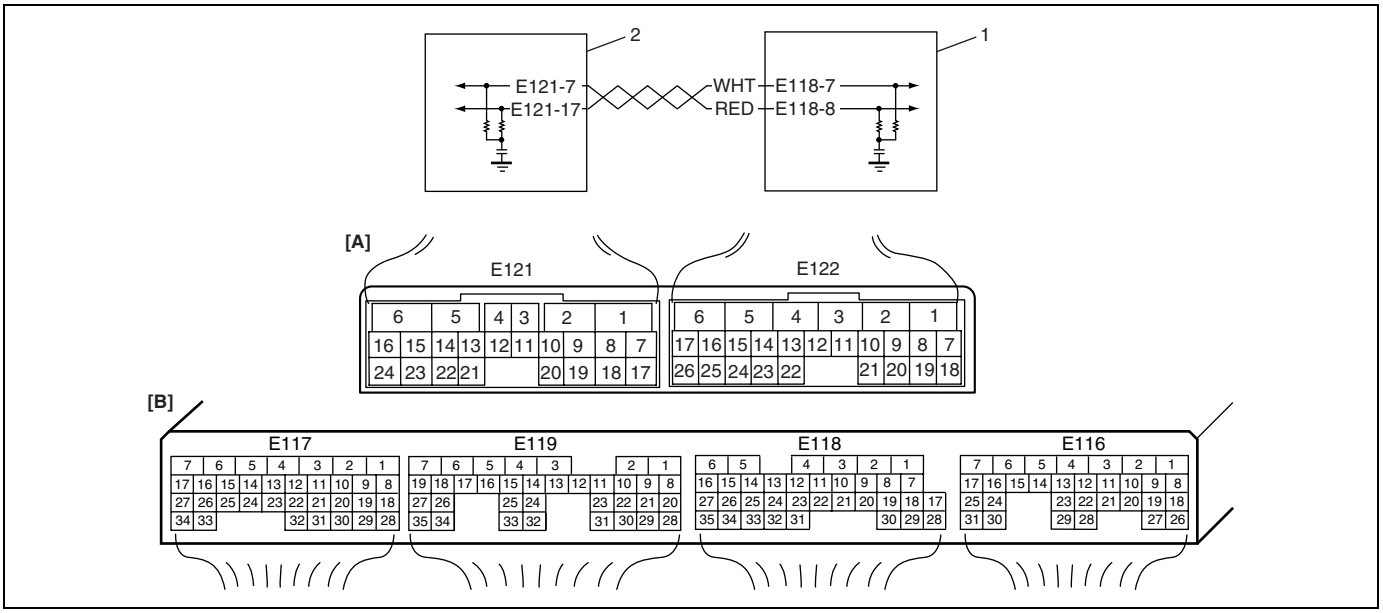

1. ECM	[A]: Terminal arrangement of TCM connector (viewed from harness side)
2. TCM	[B]: Terminal arrangement of ECM connector (viewed from harness side)

DTC Detecting Condition and Trouble Area

DTC DETECTING CONDITION	TROUBLE AREA
Reception error of communication data for ECM is detected more than specified time continuously.	• ECM • TCM • CAN circuit

DTC Confirmation Procedure

1) Connect scan tool to DLC with ignition switch OFF.
2) Clear DTCs in TCM and ECM memories.
3) Start engine and run it for 1 min. or more.
4) Check DTC.

Troubleshooting

Step	Action	Yes	No
1	Was “Automatic Transmission Diagnostic Flow” performed?	Go to Step 2.	Go to “Automatic Transmission Diagnostic Flow” in this section.
2	Check DTC 1) Connect scan tool to DLC with ignition switch turned OFF. 2) Check DTC for ECM and TCM. Is there any DTC(s) (other than DTC P1674, P1675, P1676 for ECM and DTC P1774, P1775, P1777 for TCM)?	Go to applicable DTC diag. flow.	Go to Step 3.

Step	Action	Yes	No
3	Check CAN Communication Error for TCM 1) Check DTC for TCM. Is there DTC P1774?	Go to "DTC P1774: Control Module Communication Bus Off".	Go to Step 4.
4	Check ECM and TCM Connectors 1) Check for proper connection at each ECM and TCM connector terminals with ignition switch turned OFF. 2) If connections are OK, recheck DTC for TCM with engine running. Is there DTC P1777?	Go to Step 5.	Intermittent trouble. Check for intermittent referring to "Intermittent and Poor Connection Inspection" in Section 0A.
5	Check TCM Power and Ground Circuit 1) Check for TCM power and ground circuit referring to "TCM Power and Ground Circuit Check". Is it in good condition?	Go to Step 6.	Repair TCM power and/or ground circuits.
6	Check DTC for ECM 1) Check DTC P1674 for ECM. Is it indicated?	Go to "DTC P1674: CAN Communication (Bus Off Error)" in Section 6-3.	Go to Step 7.
7	Check CAN Communication Line Circuit Continuity 1) Disconnect connectors from ECM and TCM with ignition switch turned OFF. 2) Measure resistance at the following connector terminals. • Between "E121-7" terminal of TCM connector and "E118-7" terminal of ECM connector • Between "E121-17" terminal of TCM connector and "E118-8" terminal of ECM connector Is each resistance below 1 Ω?	Go to Step 8.	Repair open or high resistance CAN communication line circuit referring to "Precaution for CAN Communication System" in Section 0A.
8	Check CAN Communication Line Circuit Insulation 1) Measure resistance between "E121-7" and "E121-17" terminals of TCM connector. Is resistance infinity?	Go to Step 9.	Repair insulation of CAN communication line circuit referring to "Precaution for CAN Communication System" in Section 0A.
9	Check CAN Communication Line Circuit Ground Short 1) Measure resistance at the following connector terminals. • Between "E121-7" terminal of TCM connector and vehicle body ground • Between "E121-17" terminal of TCM connector and vehicle body ground Is each resistance infinity?	Go to Step 10.	Repair shorted to ground of CAN communication line circuit referring to "Precaution for CAN Communication System" in Section 0A.

Step	Action	Yes	No
10	Check CAN Communication Line Circuit Power Supply Short 1) Measure voltage at the following connector terminals with ignition switch turned ON. • Between “E121-7” terminal of TCM connector and vehicle body ground • Between “E121-17” terminal of TCM connector and vehicle body ground Is each voltage 0 – 1 V?	Substitute a known-good TCM and recheck. If DTC is still detected, substitute a known-good ECM and recheck.	Repair shorted to power supply of CAN communication line circuit referring to “Precaution for CAN Communication System” in Section 0A.

DTC P1895 (No.27) Torque Reduction Signal Circuit Malfunction (M13 Engine Model without VVT)

Wiring Diagram

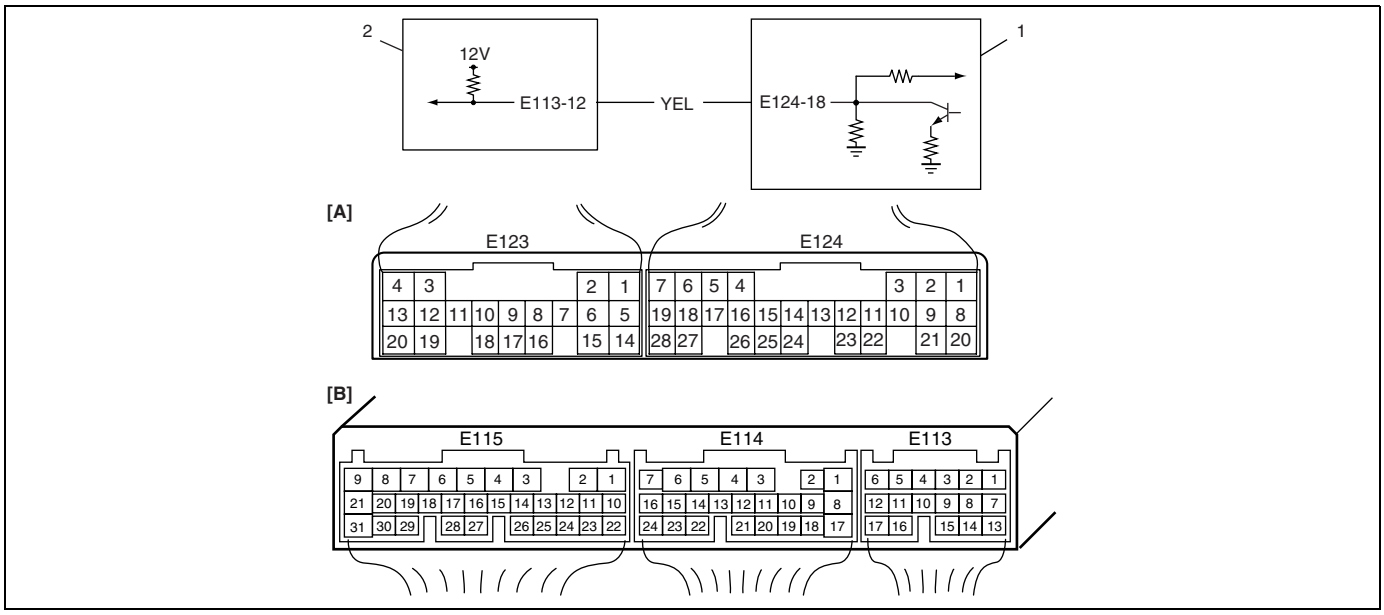

1. TCM	[A]: Terminal arrangement of TCM connector (viewed from harness side)
2. ECM	[B]: Terminal arrangement of ECM connector (viewed from harness side)

DTC Detecting Condition and Trouble Area

DTC DETECTING CONDITION	TROUBLE AREA
Voltage of torque reduction signal circuit TCM terminal is low although TCM does not require ECM to reduce engine torque.	• Torque reduction signal circuit malfunction. • TCM • ECM

DTC Confirmation Procedure

1) Connect scan tool to DLC with ignition switch OFF.
2) Clear DTCs in TCM and ECM memories.
3) After 1 minute passed from turning ignition switch ON, check DTC.

Troubleshooting

Step	Action	Yes	No
1	Was “Automatic Transmission Diagnostic Flow Table” performed?	Go to Step 2.	Go to “Automatic Transmission Diagnostic Flow Table” in this section.
2	Check Torque Reduction Signal Circuit for Open. 1) Turn ignition switch OFF. 2) Disconnect TCM and ECM connectors from TCM and ECM. 3) Check continuity between terminal “E124-18” of disconnected harness side TCM connector and terminal “E113-12” of disconnected harness side ECM connector. Is continuity indicated?	Go to Step 3.	“YEL” circuit open.

Step	Action	Yes	No
3	Check Torque Reduction Signal Circuit for Ground Short. Check continuity between terminal “E124-18” of disconnected harness side TCM connector and ground. Is continuity indicated?	“YEL” circuit shorted to ground.	Go to Step 4.
4	Check Power Supply from ECM. 1) Connect ECM connectors to ECM. 2) Turn ignition switch ON. 3) Measure voltage between terminal “E113-12” of connected harness side ECM connector and ground. Is it 9 – 14 V?	Intermittent trouble or faulty TCM or ECM. Check for intermittent referring to “Intermittent and Poor Connection” in Section 0A. If OK, substitute a known-good TCM or ECM and recheck.	Faulty ECM.

DTC P2769 (No.26) Torque Converter Clutch (TCC) Circuit Low

Wiring Diagram

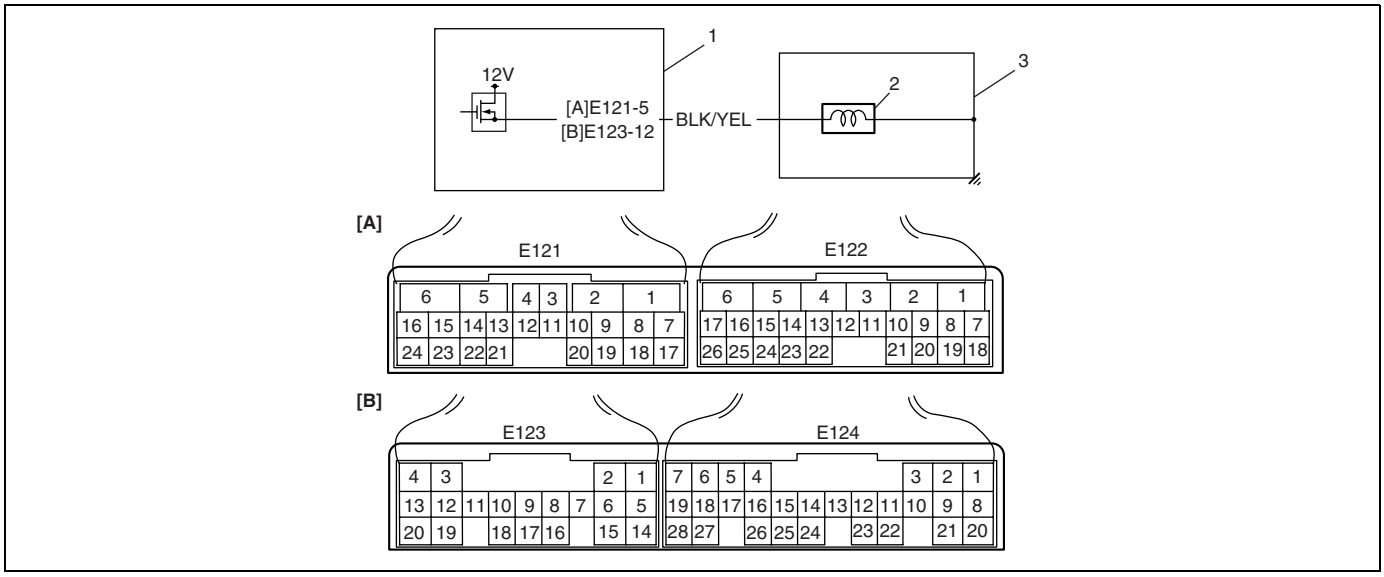

1. TCC solenoid valve	[A]: Terminal arrangement of TCM connector (M13 engine model with VVT) (viewed from harness side)
2. TCM	[B]: Terminal arrangement of TCM connector (M13 engine model without VVT) (viewed from harness side)
3. A/T	

DTC Detecting Condition and Trouble Area

DTC DETECTING CONDITION	TROUBLE AREA
Voltage of TCC solenoid valve TCM terminal is low although TCM is commanding TCC solenoid to turn ON.	• TCC solenoid valve circuit shorted to ground. • Malfunction of TCC solenoid valve • TCM

DTC Confirmation Procedure

WARNING:
- **When performing a road test, select a place where there is no traffic or possibility of a traffic accident and be very careful during testing to avoid occurrence of an accident.**
- **Road test should be carried out with 2 persons, a driver and tester, on a level road.**

1) Connect scan tool to DLC with ignition switch OFF.
2) Clear DTCs in TCM memory.
3) Start engine and warm it up to normal operating temperature.
4) Drive vehicle in “D” range and repeat lock-up ON and OFF operations 2 times each referring to “Automatic Gear Shift Diagram” in this section. In brief, 75 km/h (47 mile/h) with 4th gear, repeat accelerator pedal depressing so as throttle opening to be 15% or less and releasing for 2 times each.
5) Decrease vehicle speed gradually and stop vehicle.
6) Check DTC.

DTC Troubleshooting

Step	Action	Yes	No
1	Was “Automatic Transmission Diagnostic Flow Table” performed?	Go to Step 2.	Go to “Automatic Transmission Diagnostic Flow Table” in this section.

Step	Action	Yes	No
2	Check TCC Solenoid Valve Resistance 1) Turn ignition switch OFF. 2) Disconnect valve body harness connector on automatic transmission. 3) Check for proper connection to solenoid at "BLK/YEL" circuit. 4) Check resistance of solenoid valve. See Fig. Resistance between TCC solenoid valve terminals of transmission side valve body harness connector: 11 – 15 Ω at 20 °C (68 °F) Resistance between TCC solenoid valve terminals of transmission side valve body harness connector and transmission body: Infinity Is check results satisfactory?	Go to Step 3.	Replace TCC solenoid valve or lead wire.
3	Check TCC Solenoid Valve Circuit for Ground Short 1) Disconnect TCM connectors. 2) Check for proper connection to TCM at terminals "E121-5" [A] or "E123-12" [B]. 3) If connection is OK, check continuity between terminal "E121-5" [A] or "E123-12" [B] of disconnected harness side TCM connector and ground. Is continuity indicated?	"BLK/YEL" circuit shorted to ground.	Intermittent trouble or faulty TCM. Check for intermittent referring to "Intermittent and Poor Connection" in Section 0A. If OK, substitute a known-good TCM and recheck.

Fig. for Step 3.

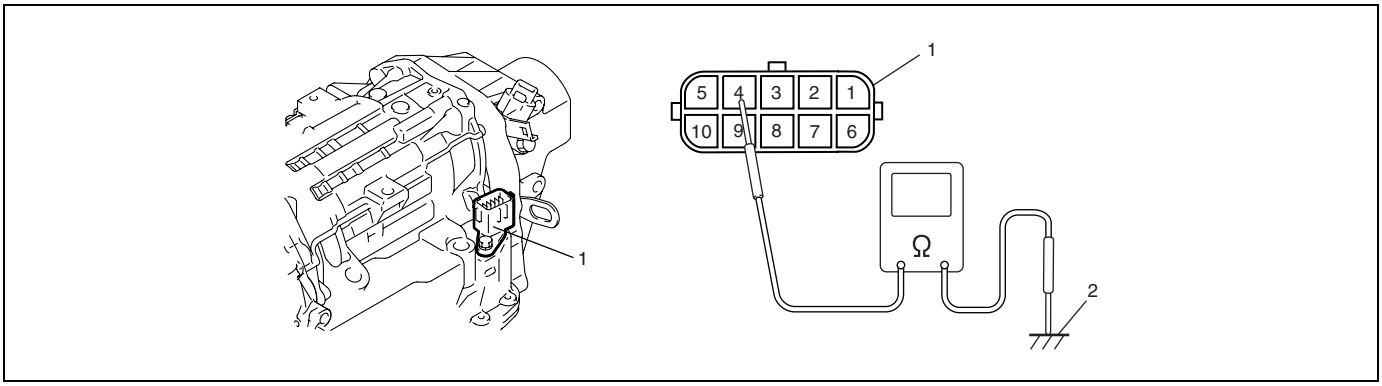

1. Valve body harness connector on transmission
2. Ground (transmission)

DTC P2770 (No.25) Torque Converter Clutch (TCC) Circuit High

Wiring Diagram

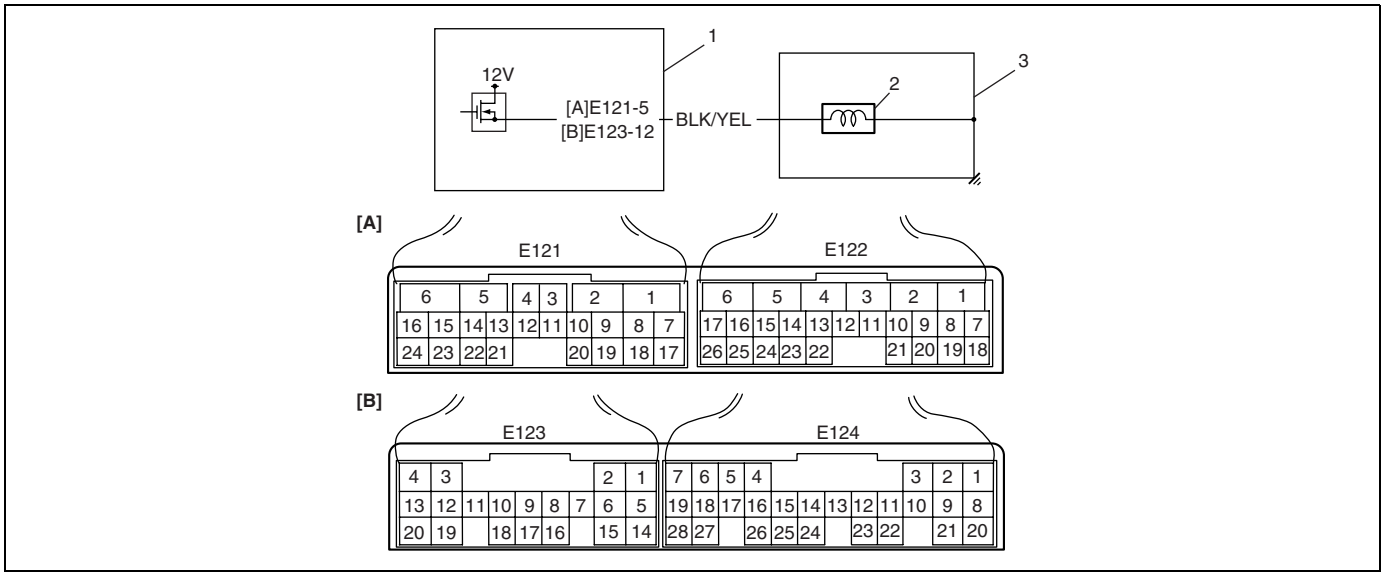

1. TCC solenoid valve	[A]: Terminal arrangement of TCM connector (M13 engine model with VVT) (viewed from harness side)
2. TCM	[B]: Terminal arrangement of TCM connector (M13 engine model without VVT) (viewed from harness side)
3. A/T	

DTC Detecting Condition and Trouble Area

DTC DETECTING CONDITION	TROUBLE AREA
Voltage of TCC solenoid valve TCM terminal is high although TCM is commanding TCC solenoid to turn OFF.	• TCC solenoid valve circuit shorted to ground. • Malfunction of TCC solenoid valve • TCM

DTC Confirmation Procedure

WARNING:

- **When performing a road test, select a place where there is no traffic or possibility of a traffic accident and be very careful during testing to avoid occurrence of an accident.**
- **Road test should be carried out with 2 persons, a driver and tester, on a level road.**

1) Connect scan tool to DLC with ignition switch OFF.
2) Clear DTCs in TCM memory.
3) Start engine.
4) Keep engine running at idle speed in “P” range for 10 seconds or more.
5) Check DTC.

DTC Troubleshooting

Step	Action	Yes	No
1	Was “Automatic Transmission Diagnostic Flow Table” performed?	Go to Step 2.	Go to “Automatic Transmission Diagnostic Flow Table” in this section.

Step	Action	Yes	No
2	Check TCC Solenoid Valve Circuit for IG Short 1) Connect valve body harness connector. 2) Disconnect TCM connectors. 3) Check for proper connection to TCM at terminal “E121-5” [A] or “E123-12” [B]. 4) If connection is OK, turn ignition switch ON and measure voltage between terminal “E121-5” [A] or “E123-12” [B] of disconnected harness side TCM connector and ground. Is it 0 – 2 V?	Go to Step3.	“BLK/YEL” circuit shorted to power circuit.
3	Check TCC Solenoid Valve Resistance 1) Turn ignition switch OFF. 2) Disconnect valve body harness connector on automatic transmission. 3) Check for proper connection to solenoid at “BLK/ YEL” circuit. 4) Check resistance of solenoid valve. See Fig. Resistance between TCC solenoid valve terminals of transmission side valve body harness connector: 11 – 15 Ω at 20 °C (68 °F) Resistance between TCC solenoid valve terminals of transmission side valve body harness connector and transmission body: Infinity Is check results satisfactory?	Intermittent trouble or faulty TCM. Check for intermittent referring to “Intermittent and Poor Connection” in Section 0A. If OK, substitute a known-good TCM and recheck.	Replace TCC solenoid valve or lead wire.

Fig. for Step 3.

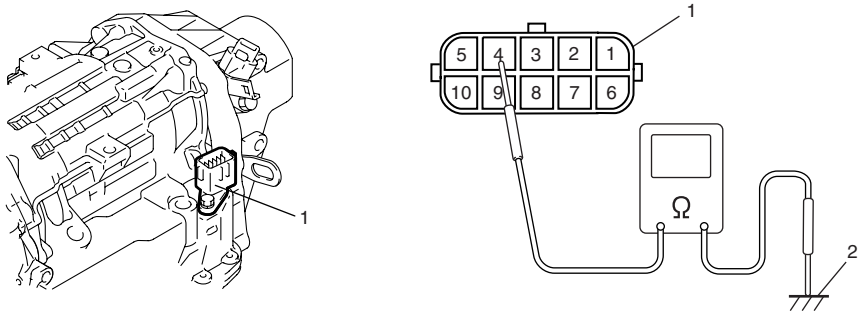

1. Valve body harness connector on transmission
2. Ground (transmission)

Scan Tool Data

As the data values given below are standard values estimated on the basis of values obtained from the normally operating vehicles by using a scan tool, use them as reference values. Even when the vehicle is in good condition, there may be cases where the checked value does not fall within each specified data range. Therefore, judgment as abnormal should not be made by checking with these data alone.
Also, condition in the below table that can be checked by the scan tool are those detected by TCM and output from TCM as commands and there may be cases where the automatic transmission or actuator is not operating (in the condition) as indicated by the scan tool.

NOTE:

The following scan tool data related to automatic transmission can be checked only by communicating with TCM.

SCAN TOOL DATA	VEHICLE CONDITION		NORMAL CONDITION / REFERENCE VALUES
GEAR POSITION	Ignition switch ON	Selector lever is in “P” position	P or N
		Selector lever is in “R” position	R
		Selector lever is in “N” position	P or N
		Selector lever is in “D” position	1
		Selector lever is in “3” position	1
		Selector lever is in “2” position	1
		Selector lever is in “L” position	1
INPUT SHAFT REVOLUTION	Ignition switch ON and engine stop		0 RPM
	At 60 km/h (37.5 mile/h) constant speed, 20% or less throttle opening and 3rd gear (“3” range)		2700 RPM (displayed in increments of 50 rpm)
OUTPUT SHAFT REVOLUTION	At vehicle stop		0 RPM
	At 60 km/h (37.5 mile/h) constant speed, 20% or less throttle opening and 3rd gear (“3” range)		2700 RPM (displayed in increments of 50 rpm)
BATTERY VOLTAGE	Ignition switch ON and engine stop		Battery voltage is displayed (8 – 16 V)
ATF TEMPERATURE	After driving at 60 km/h (37.5 mile/h) for 15 minutes or more, and A/T fluid temperature around sensor reaches 70 – 80 °C (158 – 176 °F)		70 – 80 °C, 158 – 176 °F
ENGINE SPEED	At engine idle speed		Engine idle speed is displayed
VEHICLE SPEED	At vehicle stop		0 KPH, 0 MPH
THROTTLE POSITOIN	Ignition switch ON	Accelerator pedal is released	0%
		Accelerator pedal is depressed	0 – 100% (Varies depending on depressed value)
PRESSURE CONTROL SOLENOID	At vehicle stop, closed throttle, engine idle speed and 1st gear		7%
ENGINE COOLANT TEMPERATURE	Ignition switch ON		Engine coolant temperature is displayed
ENGINE TORQUE SIGNAL	Ignition switch ON and engine stop		0 N·m

SCAN TOOL DATA	VEHICLE CONDITION		NORMAL CONDITION / REFERENCE VALUES
O/D OFF SWITCH	Ignition switch ON	Selector lever is in “P”, “N” or “D” position	OFF
		Selector lever is in other above position	ON
TRANS RANGE	Ignition switch ON	Selector lever is in “P” position	P
		Selector lever is in “R” position	R
		Selector lever is in “N” position	N
		Selector lever is in “D” position	D
		Selector lever is in “3” position	D
		Selector lever is in “2” position	2
		Selector lever is in “L” position	L
SHIFT SOLENOID-A COMMAND	At vehicle stop		ON
	At 60 km/h (37.5 mile/h) constant speed, O/D off switch ON, 20% or less throttle opening and 3rd gear		OFF
SHIFT SOLENOID-A MONITOR	At vehicle stop		ON
	At 60 km/h (37.5 mile/h) constant speed, O/D off switch ON, 20% or less throttle opening and 3rd gear		OFF
SHIFT SOLENOID-B COMMAND	At vehicle stop		ON
	At 60 km/h (37.5 mile/h) constant speed, O/D off switch ON, 20% or less throttle opening and 3rd gear		OFF
SHIFT SOLENOID-B MONITOR	At vehicle stop		ON
	At 60 km/h (37.5 mile/h) constant speed, O/D off switch ON, 20% or less throttle opening and 3rd gear		OFF
TCC SOLENOID COMMAND	At vehicle stop		OFF
	At 100 km/h (62.5 mile/h) constant speed, O/D off switch OFF, 20% or less throttle opening and 4th gear after warning up		ON
TCC SOLENOID MONITOR	At vehicle stop		OFF
	At 100 km/h (62.5 mile/h) constant speed, O/D off switch OFF, 20% or less throttle opening and 4th gear after warning up		ON
TIMING SOLENOID COMMAND	Ignition switch ON and selector lever is in “N” range		OFF
	For about 0.5 sec. while on gear shifting between 3rd and 4th or gear shifting N to D		ON
TIMING SOLENOID MONITOR	Ignition switch ON and selector lever is in “N” range		OFF
	For about 0.5 sec. while on gear shifting between 3rd and 4th or gear shifting N to D		ON
A/C SWITCH	Ignition switch ON with engine running and air conditioner switch OFF		OFF
D RANGE SIGNAL	Ignition switch ON	Selector lever is in “P” position	P/N range
		Selector lever is in “R” position	D range
		Selector lever is in “N” position	P/N range
		Selector lever is in “D” position	D range
		Selector lever is in “2” position	D range
		Selector lever is in “L” position	D range
BRAKE SWITCH	Ignition switch ON	Brake pedal is depressed	ON
		Brake pedal is released	OFF

SCAN TOOL DATA	VEHICLE CONDITION	NORMAL CONDITION / REFERENCE VALUES
TORQUE REDUCTION SIGNAL	While on gear upshifting with 25% or more throttle opening	ON
	Under condition of not shifting gear	OFF

SCAN TOOL DATA DEFINITIONS:

GEAR POSITION
Current gear position computed by throttle position coming from ECM and vehicle speed.

INPUT SHAFT REVOLUTION (RPM)
Input shaft revolution computed by reference pulses coming from input shaft speed sensor on transmission case.

OUTPUT SHAFT REVOLUTION (RPM)
Output shaft revolution computed by reference pulses coming from output shaft speed sensor (VSS) on transmission case.

BATTERY VOLTAGE (V)
Battery voltage read by TCM as analog input signal by TCM.

ATF TEMPERATURE (°C, °F)
ATF temperature decided by signal from transmission fluid temperature sensor installed on valve body.

ENGINE SPEED (RPM)
Engine speed computed by reference pulses from crankshaft position sensor.

VEHICLE SPEED (KPH/MPH)
Vehicle speed computed by reference pulse signals coming from vehicle speed sensor on transmission case.

THROTTLE POSITION (%)
Throttle opening ratio computed by duty pulse signal from ECM.

PRESSURE CONTROL SOLENOID (%)
Electric current value ratio between electric current value being outputted from TCM to solenoid and maximum value can be outputted by TCM.

ENGINE COOLANT TEMPERATURE (°C, °F)
Engine coolant temperature computed by duty pulse signal from ECM.

ENGINE TORQUE SIGNAL (N·m)
Engine torque computed by duty pulse signal outputted from ECM.

O/D OFF SWITCH (“3” position switch)
Inputted signal from “3” position switch in selector lever assembly.
ON: Shift selector lever is in “R”, “3”, “2” or “L” range
OFF: Shift selector lever is in “P”, “N” or “D” range

D RANGE SIGNAL
ON: Signal which TCM require ECM to increase idle speed
OFF: Signal which TCM does not require ECM to increase idle speed

SHIFT SOLENOID-A COMMAND
ON: ON command being outputted to shift solenoid valve-A (No.1)
OFF: ON command not being outputted to shift solenoid valve-A (No.1)

SHIFT SOLENOID-A MONITOR
ON: Electricity being passed to shift solenoid valve-A (No.1)
OFF: Electricity not being passed to shift solenoid valve-A (No.1)

SHIFT SOLENOID-B COMMAND
ON: On command being outputted to shift solenoid valve-B (No.2)
OFF: ON command not being outputted to shift solenoid valve-B (No.2)

SHIFT SOLENOID-B MONITOR
ON: Electricity being passed to shift solenoid valve-B (No.2)
OFF: Electricity not being passed to shift solenoid valve-B (No.2)

TCC SOLENOID COMMAND
ON: ON command being outputted to TCC solenoid valve
OFF: ON command not being outputted to TCC shift solenoid valve

TCC SOLENOID MONITOR
ON: Electricity being passed to TCC solenoid valve
OFF: Electricity not being passed to TCC solenoid valve

TIMING SOLENOID COMMAND
ON: ON command being outputted to timing solenoid valve
OFF: ON command not being outputted to timing solenoid valve

TIMING SOLENOID MONITOR
ON: Electricity being passed to timing solenoid valve
OFF: Electricity not being passed to timing solenoid valve

AIR CONDITIONER SIGNAL
ON: Signal which inform that air conditioner compressor is turned ON.
OFF: Signal which inform that air conditioner compressor is not turned ON.

TRANS RANGE
Transmission range detected by signal fed from transmission range sensor.

BRAKE SWITCH
Inputted signal from brake light switch on pedal bracket.
ON: Brake pedal depressed
OFF: Brake pedal released

TORQUE REDUCTION SIGNAL
ON: Signal which TCM require ECM to reduce output torque at shifting gear
OFF: Signal which TCM does not require ECM to reduce output torque

Inspection of TCM and Its Circuits

TCM and its circuits can be checked at TCM wiring connectors by measuring voltage, pulse signal and resistance.

CAUTION:
TCM cannot be checked by itself, it is strictly prohibited to connect voltmeter or ohmmeter to TCM with connector disconnected from it.

Inspection

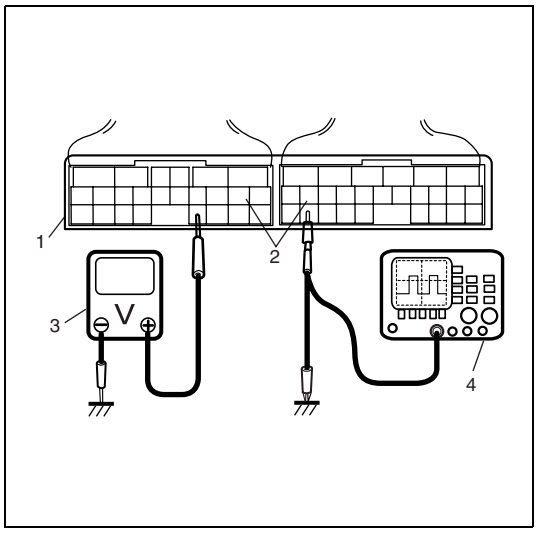

1) Remove TCM (1) from vehicle referring to “Transmission Control Module” in this section.
2) Connect TCM connectors (2) to TCM.
3) Check voltage and/or pulse signal at each terminal of connectors connected, using voltmeter (3) and oscilloscope (4).

NOTE:

- **As each terminal voltage is affected by battery voltage, confirm that it is 11 V or more when ignition switch is ON.**
- **Voltage with asterisk (*) cannot be measured by voltmeter because it is pulse signal.**
  Check it with oscilloscope if necessary.

Terminal Arrangement of TCM Coupler (Viewed From Harness Side)

M13 engine model with VVT

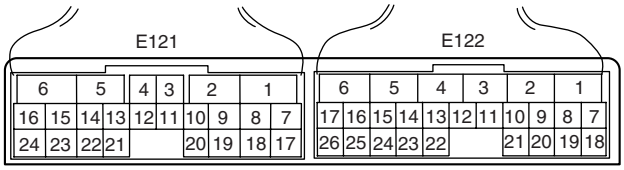

Connector	Terminal number	Wire color	Circuit	Normal voltage	Condition
E121	1	BLK	Ground	0 – 1 V	Ignition switch ON
	2	BLU/YEL	Pressure control solenoid valve (–)	0.6 – 1.0 V	Ignition switch ON
	3	–	–	–	–
	4	BLU/RED	Pressure control solenoid valve (+)	*0 – 0.6 V ↑↓ 10 – 14 V (Reference waveform No.1)	Engine running at idling (Output signal is duty pulse. Duty ratio varies depending on throttle valve opening.)
	5	BLK/YEL	TCC solenoid valve	0 – 1 V	Ignition switch ON
	6	BLU/ORN	Power source	10 – 14V	Ignition switch ON

Connector	Terminal number	Wire color	Circuit	Normal voltage	Condition
E121	7	WHT	CAN communication line (Low)	*0.5 – 2.5 V (Reference waveform No.2)	Ignition switch turned ON with engine stop (CAN communication line signal is pulse. Pulse signal is displayed with a regular frequency varies depending on engine condition.)
	8	–	–	–	–
	9	–	–	–	–
	10	–	–	–	–
	11	BLU	Transmission fluid temperature sensor (+)	2.9 – 3.1 V	Ignition switch ON, fluid temperature is 20 °C (68 °F)
				0.3 – 0.5 V	Ignition switch ON, fluid temperature is 100 °C (212 °F)
	12	BLK/BLU	Transmission fluid temperature sensor (–)	0 – 1 V	Ignition switch ON
	13	–	–	–	–
	14	WHT/RED	Timing solenoid valve	0 – 1 V	Ignition switch ON
	15	YEL/GRN	Shift solenoid valve-B (No.2)	9 – 14 V	Ignition switch ON, select lever in “P” range
	16	RED/GRN	Shift solenoid valve-A (No.1)	9 – 14 V	Ignition switch ON, select lever in “P” range
	17	RED	CAN communication line (High)	*2.5 – 4.7 V (Reference waveform No.2)	Ignition switch turned ON with engine stop (CAN communication line signal is pulse. Pulse signal is displayed with a regular frequency varies depending on engine condition.)
	18	–	–	–	–
	19	–	–	–	–
	20	–	–	–	–
	21	–	–	–	–
	22	–	–	–	–
	23	BLK	Ground	0 – 1 V	Ignition switch ON
	24	WHT	Power source for back-up	10 – 14 V	Constantly
E122	1	RED	Transmission range sensor (“R” range)	8 – 14 V	Ignition switch ON, selector lever at “R” range
				0 – 1 V	Ignition switch ON, selector lever at other than “R” range
	2	–	–	–	–
	3	–	–	–	–
	4	–	–	–	–
	5	PNK	Output shaft speed sensor (+)	2 – 3 V	Ignition switch turned ON, vehicle stop
				*(Reference waveform No.3)	While vehicle running (Output signal is waveform. Waveform frequency varies depending on output shaft speed. (18 pulses are generated par 1 input shaft revolution.))

Connector	Terminal number	Wire color	Circuit	Normal voltage	Condition
E122	6	WHT	Input shaft speed sensor (+)	2 – 3 V	Ignition switch turned ON, engine stops
				*(Reference waveform No.4)	While engine running at “P” or “N” range or vehicle running (Output signal is waveform. Waveform frequency varies depending on output shaft speed. (16 pulses are generated par 1 input shaft revolution.))
	7	GRN/RED	Transmission range sensor (“D” range)	8 – 14 V	Ignition switch ON, selector lever at “D” range
				0 – 1 V	Ignition switch ON, selector lever at other than “D” range
	8	ORN	Transmission range sensor (“N” range)	8 – 14 V	Ignition switch ON, selector lever at “N” range
				0 – 1 V	Ignition switch ON, selector lever at other than “N” range
	9	BLU/YEL	“3” position switch	0 – 1 V	Ignition switch ON, selector lever at “R”, “3”, “2” or “L” range
				8 – 14 V	Ignition switch ON, selector lever at “P”, “N” or “D” range
	10	–	–	–	–
	11	YEL/BLK	TCM - combination meter serial communication line	*0 – 0.6 V ↑↓ 10 – 14 V (Reference waveform No.5)	While engine running (Output signal is active low duty pulse. Duty ratio varies depending on meter indicator light condition.)
	12	GRY	Diagnosis switch	8 – 14 V	Ignition switch ON
	13	–	–	–	–
	14	BLU	Output shaft speed sensor (–)	2 – 3 V	Ignition switch ON, vehicle at stop
	15	–	–	–	–
	16	BRN	Input shaft speed sensor (–)	2 – 3 V	Ignition switch ON
	17	–	–	–	–
	18	GRN/WHT	Transmission range sensor (“L” range)	8 – 14 V	Ignition switch ON, select lever at “L” range
				0 – 1 V	Ignition switch ON, select lever at other than “L” range
	19	GRN	Transmission range sensor (“2” range)	8 – 14 V	Ignition switch ON, select lever at “2” range
				0 – 1 V	Ignition switch ON, select lever at other than “2” range
	20	ORN/BLK	Transmission range sensor (“P” range)	8 – 14 V	Ignition switch ON, select lever at “P” range
				0 – 1 V	Ignition switch ON, select lever at other than “P” range
	21	–	–	–	–
	22	–	–	–	–
	23	PNK/GRN	Data link connector	8 – 14 V	Ignition switch ON
	24	–	–	–	–

Connector	Terminal number	Wire color	Circuit	Normal voltage	Condition
E122	25	YEL	Vehicle speed sensor	8 – 14 V	Ignition switch ON
				*0 – 1 V ↑↓ 10 – 14 V (Reference waveform No.6)	Vehicle running (Signal from sensor is pulse. Pulse frequency varies depending on vehicle speed. 1.273 pulse are generated per 1 sensor shaft revolution)
	26	–	–	–	–

M13 engine model without VVT

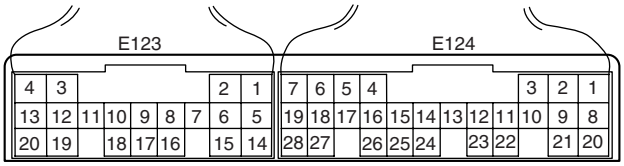

Connector	Terminal number	Wire color	Circuit	Normal voltage	Condition
E123	1	–	–	–	–
	2	–	–	–	–
	3	YEL/GRN	Shift solenoid valve-B (No.2)	8 – 14 V	Ignition switch ON, select lever in “P” range
	4	RED/GRN	Shift solenoid valve-A (No.1)	8 – 14 V	Ignition switch ON, select lever in “P” range
	5	BLU	Transmission fluid temperature sensor (+)	2.9 – 3.1 V	Ignition switch ON, fluid temperature is 20 °C (68 °F)
				0.3 – 0.5 V	Ignition switch ON, fluid temperature is 100 °C (212 °F)
	6	GRY	Diagnosis switch	8 – 14 V	Ignition switch ON
	7	–	–	–	–
	8	BLU/YEL	Pressure control solenoid valve (–)	0.6 – 1.0 V	Ignition switch ON
	9	–	–	–	–
	10	WHT/RED	Timing solenoid valve	0 – 1 V	Ignition switch ON
	11	BLU/RED	Pressure control solenoid valve (+)	*0 – 0.6 V ↑↓ 10 – 14 V (Reference waveform No.1)	Engine running at idling (Output signal is duty pulse. Duty ratio varies depending on throttle valve opening.)
	12	BLK/YEL	TCC solenoid valve	0 – 1 V	Ignition switch ON
	13	WHT	Power source for back-up	10 – 14 V	Constantly
	14	BLK/BLU	Transmission fluid temperature sensor (–)	0 – 1 V	Ignition switch ON
	15	BLK	Ground	0 – 1 V	Ignition switch ON
	16	–	–	–	–
	17	–	–	–	–
	18	–	–	–	–
	19	BLK	Ground	0 – 1 V	Ignition switch ON
	20	BLU/ORN	Power source	10 – 14 V	Ignition switch ON

Connector	Terminal number	Wire color	Circuit	Normal voltage	Condition
E124	1	RED	Transmission range sensor (“R” range)	8 – 14 V	Ignition switch ON, select lever at “R” range
				0 – 1 V	Ignition switch ON, select lever at other than “R” range
	2	ORN/BLK	Transmission range sensor (“P” range)	8 – 14 V	Ignition switch ON, select lever at “P” range
				0 – 1 V	Ignition switch ON, select lever at other than “P” range
	3	BLU/YEL	“3” position switch	8 – 14 V	Ignition switch ON, select lever at “P”, “N” or “D” range
				0 – 1 V	Ignition switch ON, select lever at “R”, “3”, “2” or “L” range
	4	PNK	Output shaft speed sensor (+)	2 – 3 V	Ignition switch ON, vehicle stop
				*(Reference waveform No.3)	While vehicle running (Output signal is waveform. Waveform frequency varies depending on output shaft speed. (18 pulses are generated per 1 input shaft revolution.))
	5	WHT	Input shaft speed sensor (+)	2 – 3 V	Ignition switch ON, engine stop
				*(Reference waveform No.4)	While engine running at “P” or “N” range or vehicle running (Output signal is waveform. Waveform frequency varies depending on output shaft speed. (16 pulses are generated per 1 input shaft revolution.))
	6	BRN/RED	Throttle opening signal (from ECM)	*0 – 0.6 V ↑↓ 10 – 14 V (Reference waveform No.7)	Ignition switch ON (Signal from ECM is active low duty pulse. Duty ratio varies as throttle valve is opened gradually.) Duty on time: 0.78 ms (throttle opening 0%) 6.24 ms (throttle opening 100%)
	7	YEL/RED	Engine coolant temperature signal (from ECM)	*0 – 0.6 V ↑↓ 10 – 14 V (Reference waveform No.8)	Ignition switch ON (Signal from ECM is active low duty pulse. Duty ratio varies depending on engine coolant temperature.) Duty on time: 850 ms at 20 °C, 68 °F 1450 ms at 80 °C, 176 °F
	8	GRN/RED	Transmission range sensor (“D” range)	8 – 14 V	Ignition switch ON, select lever at “D” range
				0 – 1 V	Ignition switch ON, select lever at other than “D” range
	9	ORN	Transmission range sensor (“N” range)	8 – 14 V	Ignition switch ON, select lever at “N” range
				0 – 1 V	Ignition switch ON, select lever at other than “N” range
	10	YEL/BLK	TCM - combination meter serial communication line	*0 – 0.6 V ↑↓ 10 – 14 V (Reference waveform No.5)	While engine running (Output signal is active low duty pulse. Duty ratio varies depending on meter indicator light condition.)
	11	–	–	–	–

Connector	Terminal number	Wire color	Circuit	Normal voltage	Condition
E124	12	GRN/YEL	D range signal	8 – 14 V	Ignition switch ON, select lever at “P” or “N”
				0 – 1 V	Ignition switch ON, select lever at “R”, “D”, “3”, “2” or “L”
	13	GRN/WHT	Brake light switch	8 – 14 V	Ignition switch ON, brake pedal depressed
				0 – 1 V	Ignition switch ON, brake pedal released
	14	BLK/YEL	Air conditioner compressor signal	0 – 1 V	Ignition switch ON, A/C compressor turned ON
				8 – 14 V	Ignition switch ON, A/C compressor turned OFF
	15	BRN	Engine speed signal	0 – 1 V	Ignition switch ON, engine at stop
				*0 – 0.6 V ↑↓ 10 – 14 V (Reference waveform No.9)	While engine running (signal from ECM is pulse. Pulse frequency varies depending on engine speed. (3000 rpm = 100 Hz))
	16	BLU	Output shaft speed sensor (–)	2 – 3 V	Ignition switch ON, vehicle stop
	17	BRN	Input shaft speed sensor (–)	2 – 3 V	Ignition switch ON, engine stop
	18	YEL	Torque control signal	9 – 14 V	Vehicle running (Signal is 100 Hz low duty pulse. Pulse generated time is shifting time when transmission gear is shifted.)
	19	–	–	–	–
	20	BLU/WHT	Transmission range sensor (“L” range)	8 – 14 V	Ignition switch ON, select lever at “L” range
				0 – 1 V	Ignition switch ON, select lever at other than “L” range
	21	GRN/YEL	Transmission range sensor (“2” range)	8 – 14 V	Ignition switch ON, select lever at “2” range
				0 – 1 V	Ignition switch ON, select lever at other than “2” range
	22	–	–	–	–
	23	BLK/ORN	Engine torque signal	*0 – 0.6 V ↑↓ 10 – 14 V (Reference waveform No.10)	Ignition switch ON (Signal from ECM is 128 Hz duty pulse. Duty ratio varies depending on engine torque.)
	24	YEL/GRN	Vehicle speed sensor	*0 – 0.6 V ↑↓ 10 – 14 V (Reference waveform No.5)	Ignition switch ON (Signal from sensor is pulse. Pulse frequency varies depending on vehicle speed. 1.273 pulse are generated per 1 sensor shaft revolution.)
	25	–	–	–	–
	26	–	–	–	–
	27	BLU	Data link connector	8 – 14 V	Ignition switch ON

Connector	Terminal number	Wire color	Circuit	Normal voltage	Condition
E124	28	WHT/YEL	ATF temperature signal	*0 – 0.6 V ↑↓ 4 – 5 V (Reference waveform No.11)	Ignition switch ON (Signal is 0.33 Hz duty pulse. Duty ratio varies depending on ATF temperature.)

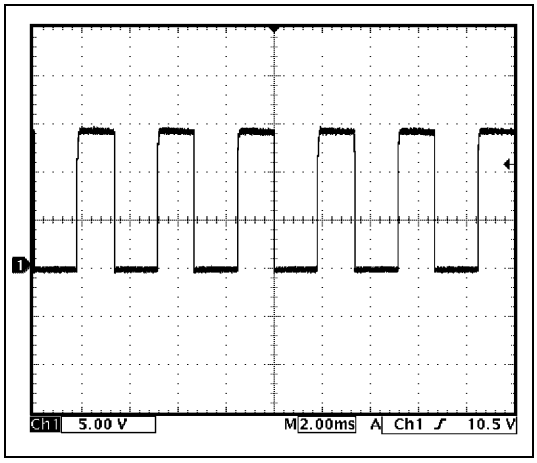

1. Reference waveform No.1

Pressure control solenoid valve signal at engine idling

Measurement terminal	CH1: E121-4 to E121-1 (M13 engine model with VVT), E123-11 to E123-15 (M13 engine model without VVT)
Oscilloscope setting	CH1: 5 V/DIV TIME: 2 ms/DIV
Measurement condition	• After warmed up to normal operating temperature • Engine at specified idle speed with “P” range

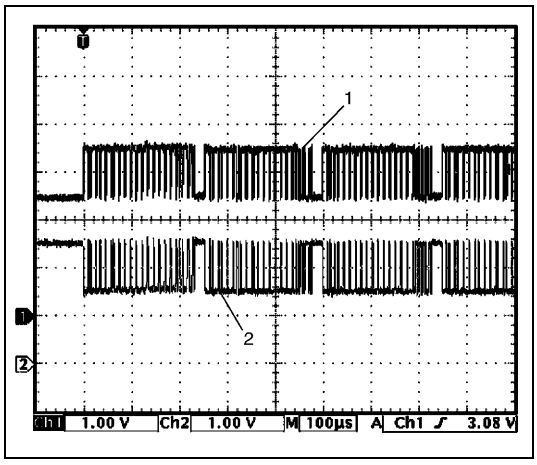

2. Reference waveform No.2

CAN communication line signal from ECM at ignition switch turned ON

Measurement terminal	CH1: E121-7 to E121-1 CH2: E121-17 to E121-1
Oscilloscope setting	CH1: 1 V/DIV, CH2: 1 V/DIV TIME: 100 µs/DIV
Measurement condition	Ignition switch turned ON (Depending on engine condition)

1. CAN communication line signal (High)
2. CAN communication line signal (Low)

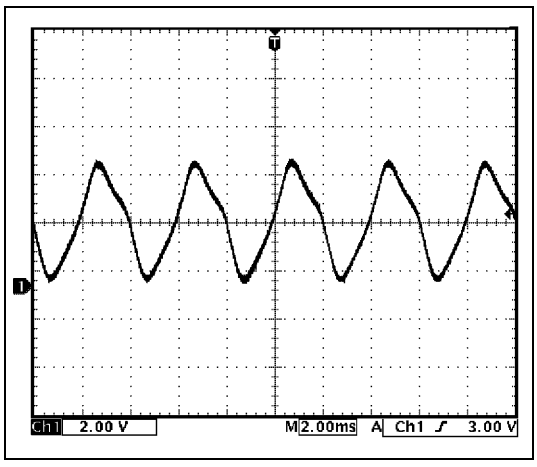

3. Reference waveform No.3

Output shaft speed sensor signal at vehicle speed 20 km/h (12.5 mile/h)

Measurement terminal	CH1: E122-5 to E121-1 (M13 engine model with VVT), E124-4 to E123-15 (M13 engine model without VVT)
Oscilloscope setting	CH1: 2 V/DIV TIME: 2 ms/DIV
Measurement condition	• After warmed up to normal operating temperature • Vehicle speed at 20 km/h, 12.5 mile/h

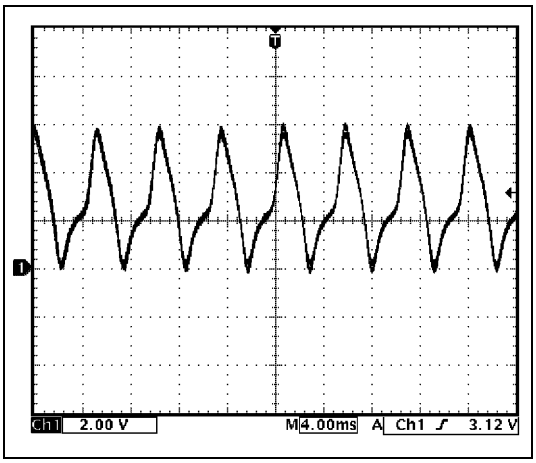

4. Reference waveform No.4

Input shaft speed sensor signal at engine idling

Measurement terminal	CH1: E122-6 to E121-1 (M13 engine model with VVT), E124-5 to E123-15 (M13 engine model without VVT)
Oscilloscope setting	CH1: 2 V/DIV TIME: 4 ms/DIV
Measurement condition	• After warmed up to normal operating temperature • Engine at specified idle speed with “P” range

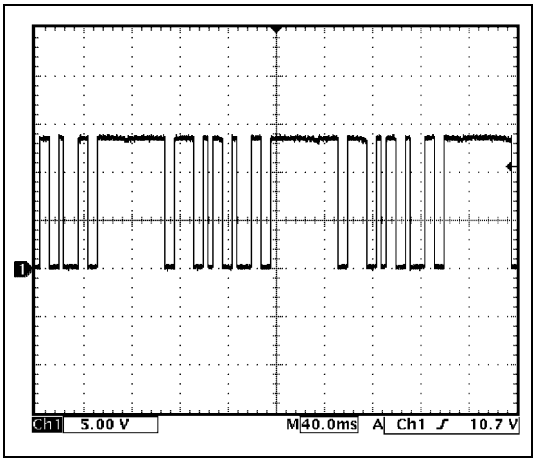

5. Reference waveform No.5

TCM-combination meter communication signal

Measurement terminal	CH1: E122-11 to E121-1 (M13 engine model with VVT), E124-10 to E123-15 (M13 engine model without VVT)
Oscilloscope setting	CH1: 5 V/DIV TIME: 40 ms/DIV
Measurement condition	• After warmed up to normal operating temperature • Engine at specified idle speed with “P” range

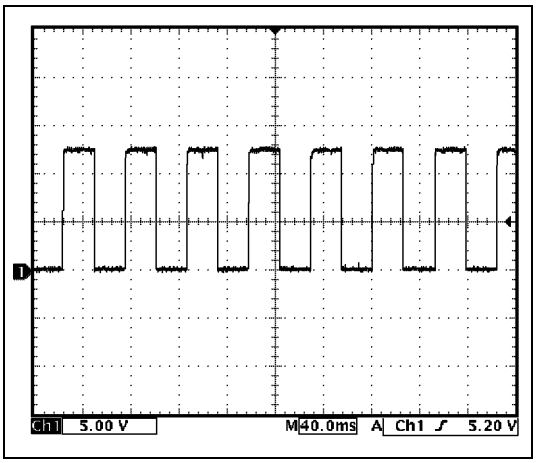

6. Reference waveform No.6

VSS signal at 30 km/h (19 mph)

Measurement terminal	CH1: E122-25 to E121-1 (M13 engine model with VVT), E124-24 to E123-15 (M13 engine model without VVT)
Oscilloscope setting	CH1: 5 V/DIV TIME: 40 ms/DIV
Measurement condition	• After warmed up to normal operating temperature • Drive vehicle at 30 km/h (19 mph)

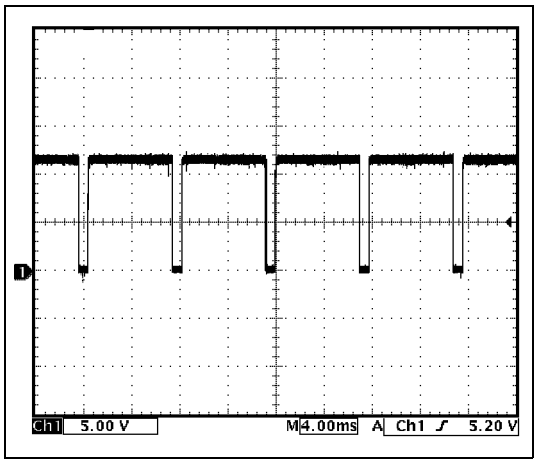

7. Reference waveform No.7

Throttle opening signal from ECM

Measurement terminal	CH1: E124-6 to E123-15
Oscilloscope setting	CH1: 5 V/DIV TIME: 4 ms/DIV
Measurement condition	• After warmed up to normal operating temperature • Engine at specified idle speed

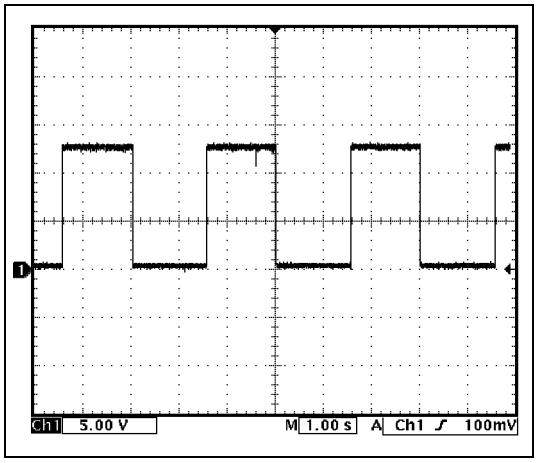

8. Reference waveform No.8

Engine coolant temperature signal from ECM

Measurement terminal	CH1: E124-7 to E123-15
Oscilloscope setting	CH1: 5 V/DIV TIME: 1 s/DIV
Measurement condition	• After warmed up to normal operating temperature (90 °C, 194 °F) • Engine at specified idle speed

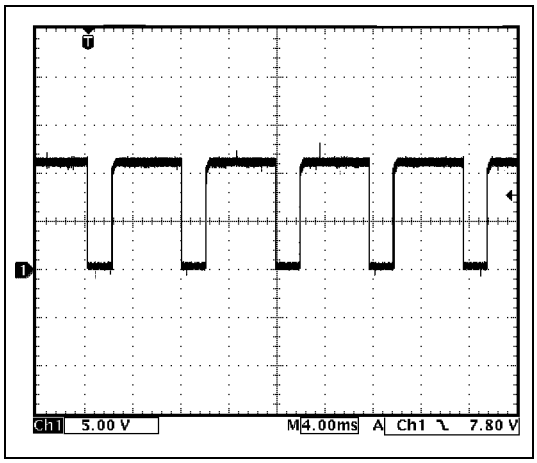

9. Reference waveform No.9

Engine speed signal from ECM

Measurement terminal	CH1: E124-15 to E123-15
Oscilloscope setting	CH1: 5 V/DIV TIME: 4 ms/DIV
Measurement condition	• After warmed up to normal operating temperature • Engine at specified idle speed

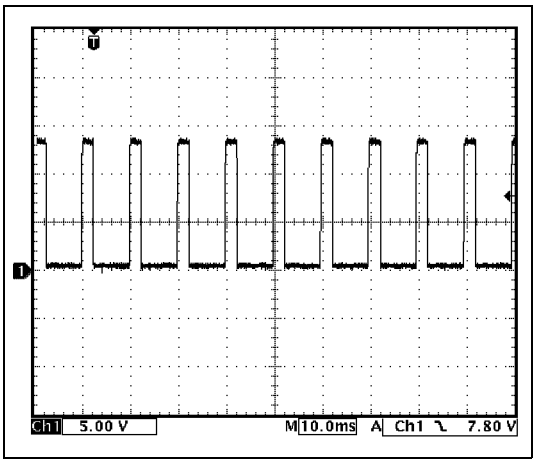

10. Reference waveform No.10

Engine torque signal from ECM

Measurement terminal	CH1: E124-23 to E123-15
Oscilloscope setting	CH1: 5 V/DIV TIME: 10 ms/DIV
Measurement condition	• After warmed up to normal operating temperature • Engine at specified idle speed

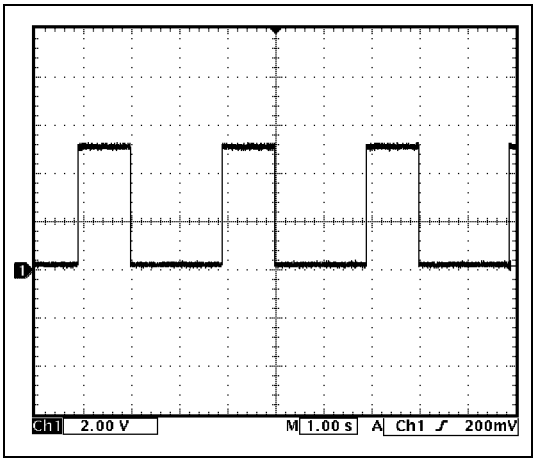

11. Reference waveform No.11

ATF temperature signal to ECM

Measurement terminal	CH1: E124-28 to E123-15
Oscilloscope setting	CH1: 2 V/DIV TIME: 1 s/DIV
Measurement condition	• After warmed up to normal operating temperature (ATF temperature 80 °C, 176 °F) • Engine at specified idle speed

On-Vehicle Service

Maintenance Service

Fluid level check at normal operating (hot) temperature (Hot check)

Inspection

1) Stop vehicle and place it level.
2) Apply parking brake and place chocks against wheels.
3) With select lever at P position, start engine.
4) Warm up engine till fluid temperature reaches normal operating temperature (70 – 80 °C / 158 – 176 °F). As a guide to check fluid temperature, warm up engine to normal operating.

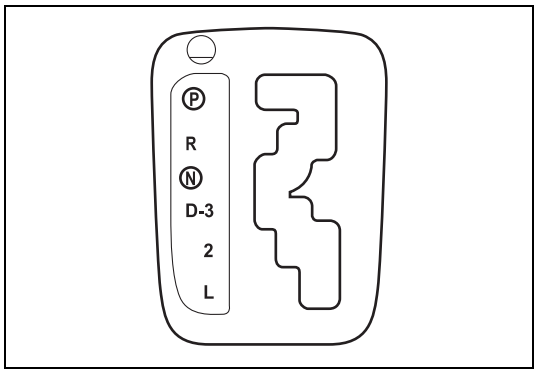

5) Keep engine idling and shift select lever slowly to “L” and back to “P” position.
6) With engine idling, pull out fluid level gauge, wipe it off with a clean cloth and put it back into place.

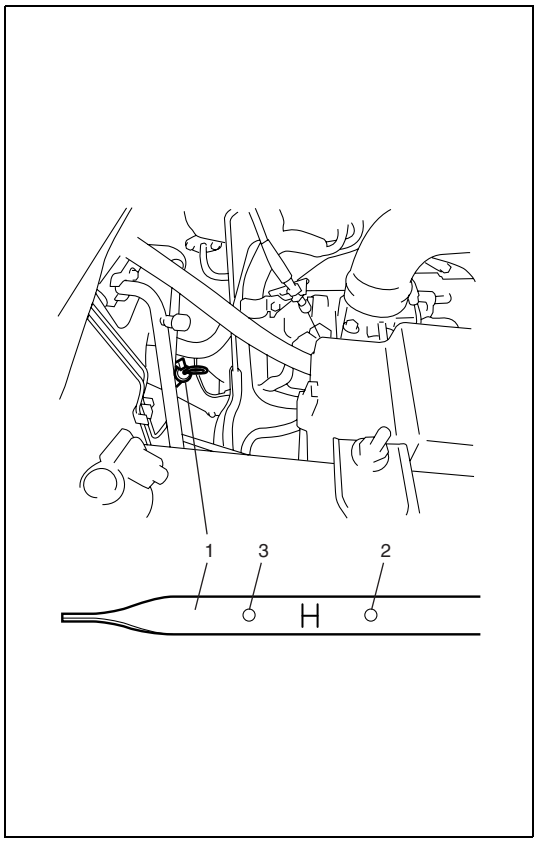

7) Pull out fluid level gauge (1) again and check fluid level indicated on it. The lowest fluid level should be between FULL HOT and LOW HOT. If it is below LOW HOT, add an equivalent of DEXRON®-III up to FULL HOT.

Automatic transmission fluid

An equivalent of DEXRON®-III

NOTE:

- **Do not race engine while checking fluid level, even after the engine start.**
- **Do not overfill. Overfilling can cause foaming and loss of fluid through breather. Then slippage and transmission failure can result.**
- **Bringing the level from LOW HOT to FULL HOT requires 0.4 liters (0.85/0.70 US/Imp. pt).**
- **If vehicle was driven under high load such as pulling a trailer, fluid level should be checked about half an hour after it is stopped.**

2. “FULL HOT” mark
3. “LOW HOT” mark

Fluid change

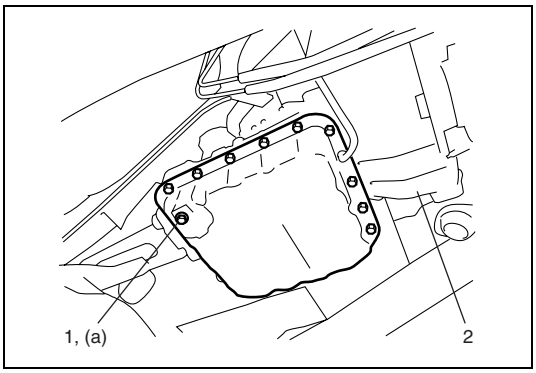

1) Lift up vehicle.
2) When engine is cool, remove drain plug (1) from transmission housing (2) and drain A/T fluid.
3) Install drain plug (1).

Tightening torque
A/T fluid drain plug (a): 17 N·m (1.7 kg-m, 12.5 lb-ft)

4) Lower vehicle and fill proper amount of an equivalent of DEXRON®-III.

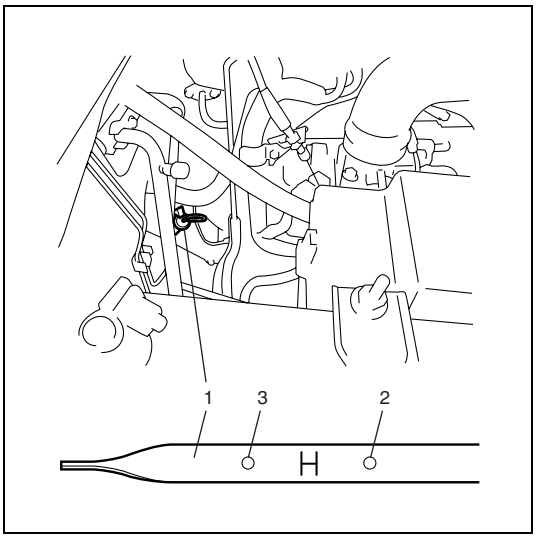

5) Check fluid level referring to "Fluid Level Check at Normal Operating (Hot) Temperature (Hot Check)" in this section.

Automatic transmission fluid
An equivalent of DEXRON®-III

Automatic transmission fluid capacity
When draining from drain plug hole:
3.3 liters (6.97/5.81 US/Imp. pt.)
When overhauling:
5.7 liters (12.16/10.03 US/Imp. pt.)

1. Fluid level gauge
2. "FULL HOT" mark
3. "LOW HOT" mark

A/T fluid cooler hoses

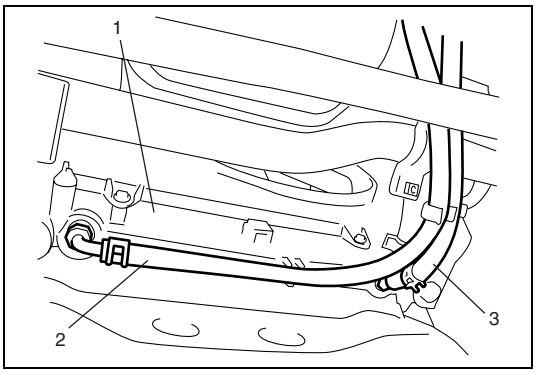

The rubber hoses for the A/T fluid cooler should be replaced at specified interval. When replacing them, be sure to note the following.

- To replace clamps at the same time
- To insert hose as far as its limit mark
- To clamp clamps securely

1. Radiator
2. Inlet hose (Outlet from A/T fluid cooler)
3. Outlet hose (Inlet to A/T fluid cooler)

Select Lever Assembly Components

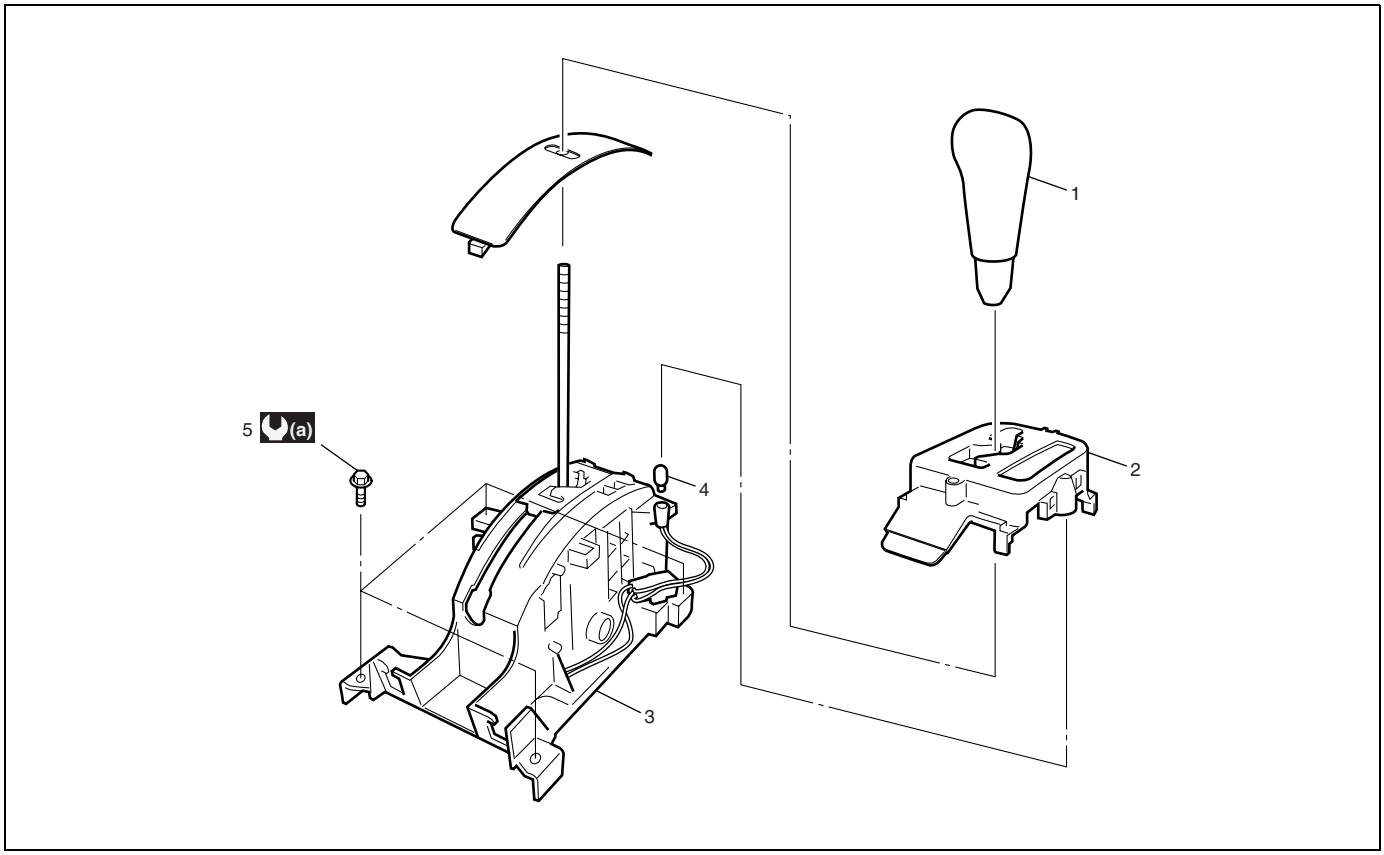

1. Select lever knob	4. Bulb
2. Select lever indicator	5. Select lever assembly mounting bolt
3. Select lever assembly	(a) 17.5 N·m (1.75 kg-m, 13.0 lb-ft)

Select Lever Assembly Installation

Note the following when installing select lever assembly:

- After installing select lever assembly, adjust selector rod referring to “Adjustment” under “Selector Rod Removal and Installation” in this section.

Select Lever Knob Installation

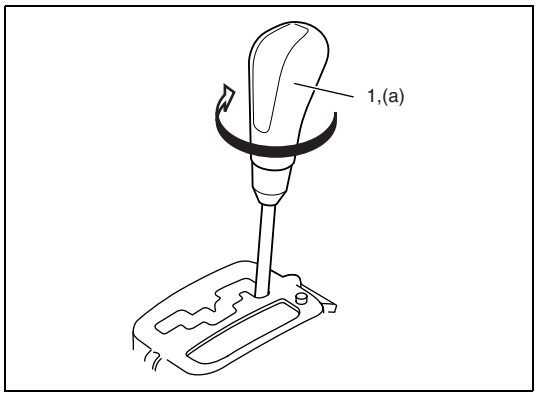

Screw select lever knob onto select lever by specified numbers of rotation below.

Rotation numbers for select lever knob installation
(a): 11 – 12 rotations

CAUTION:

When installing select lever knob, do not turn more than specified numbers of rotation. Otherwise select lever knob is damaged.

Select Lever Inspection

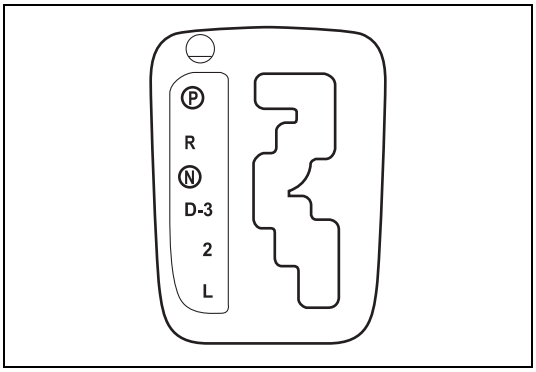

Check select lever for smooth and clear-cut movement individually.
If a malfunction is found, replace select lever assembly.

“3” Position Switch Inspection

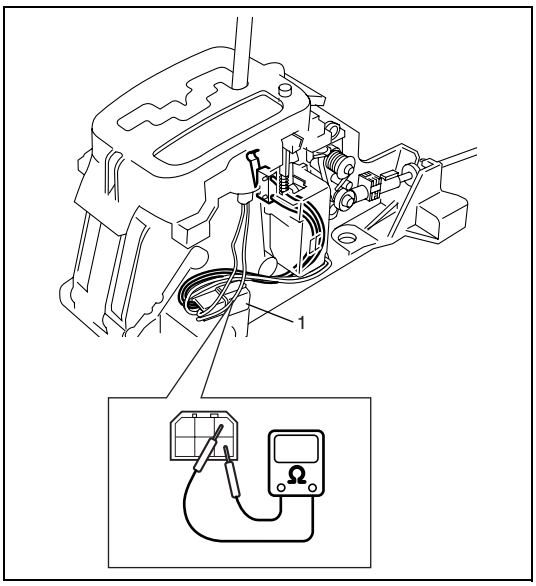

1) Remove center console box.
2) Disconnect “3” position switch connector (1).
3) Check continuity between “3” position switch terminals.

Select lever position	P, N and D	R, 3, 2 and L
Continuity	Continuity	No continuity

Select Control System Components

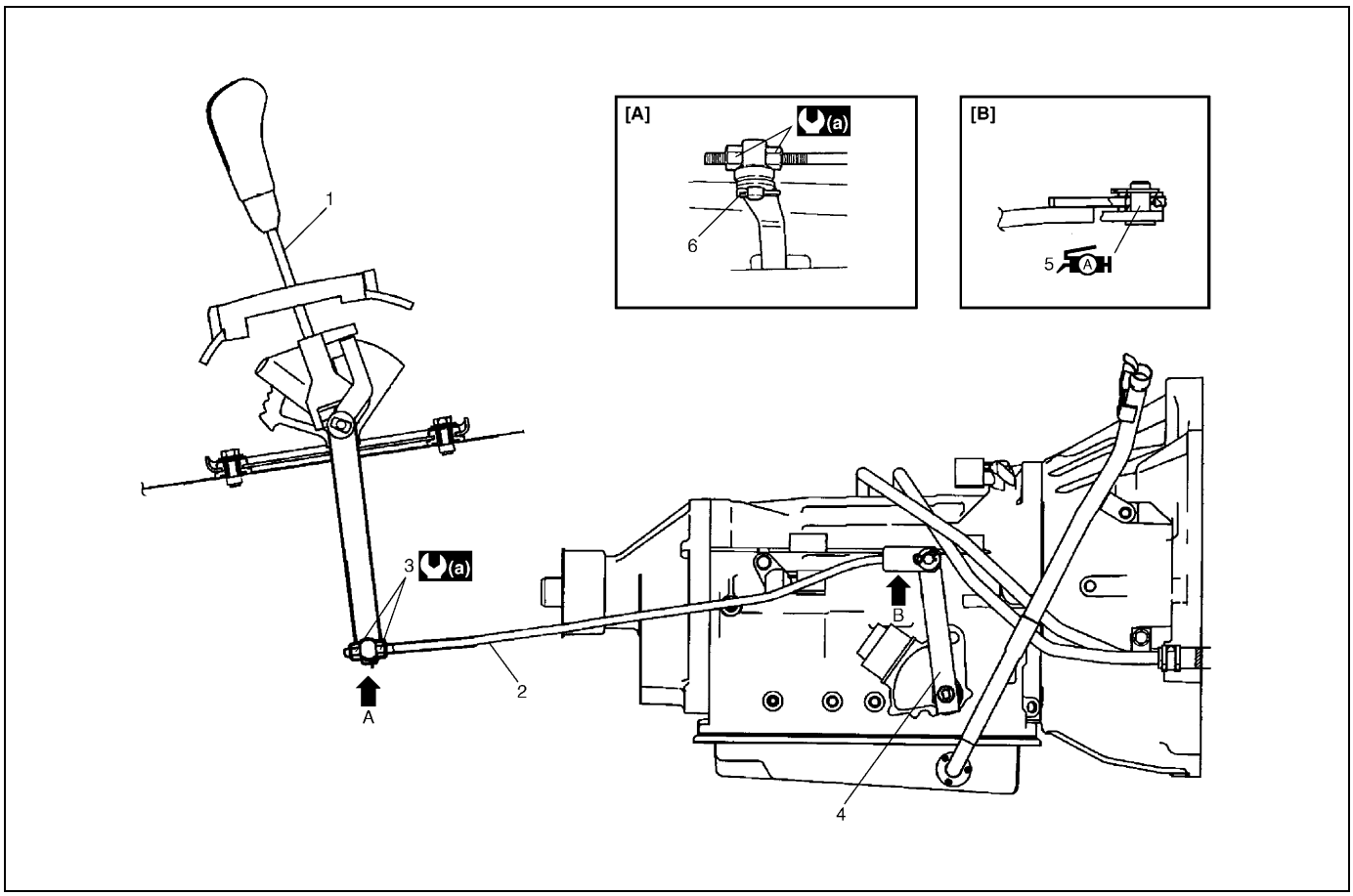

[A]: Viewed from A	4. Manual selector lever
[B]: Viewed from B	5. Manual selector lever pin : Apply lithium grease 99000-25010 to all around pin.
1. Select lever assembly	6. Clip
2. Selector rod	(a) 7 N·m (0.7 kg-m, 5.0 lb-ft)
3. Manual selector rod nut	

Selector Rod Removal and Installation

Removal

1) Hoist vehicle.
2) Remove clips on both ends of selector rod.
3) Remove selector rod from transmission and selector lever assembly.

Installation

Install select cable by reversing removal procedure.
The important steps in installation are as follows.

- Apply grease to manual selector lever pin.

: Grease 99000-25010

- Tighten nuts in figure to specified torque.

Tightening torque
Manual selector rod nut (a): 7 N·m (0.7 kg-m, 5.0 lb-ft)

- Adjusting procedure is as follows.

Adjustment

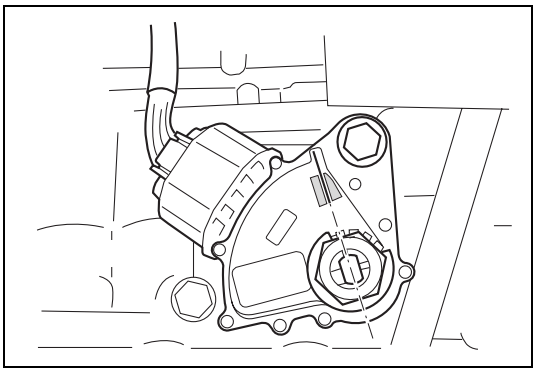

1) Shift manual shift lever to “N” range (transmission range sensor “N” range).

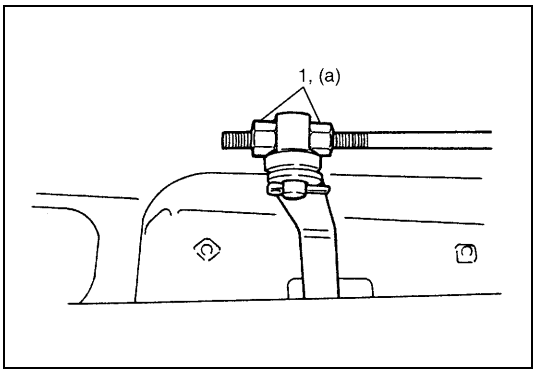

2) Turn nuts (1) by hand till it contacts control shift lever joint. Then tighten them with wrench.

Tightening torque
Manual selector rod nut (a): 7 N·m (0.7 kg-m, 5.0 lb-ft)

3) After select cable was installed, check for the following.
- Push vehicle with selector lever shifted to “P” range. Vehicle should not move.
- Vehicle can not be driven in “N” range.
- Vehicle can be driven in “D”, “3”, “2” and “L” ranges.
- Vehicle can be backed and back-up lamp lights in “R” range.
- Vehicle can be engine starts in “P” and “N” range.
- Vehicle can not be engine starts in “D”, “3”, “2”, “L” and “R” range.
- Thing that indicator lamp of meter panel moves similarly.

Transmission Range Sensor (Shift Switch)

Adjustment and Inspection

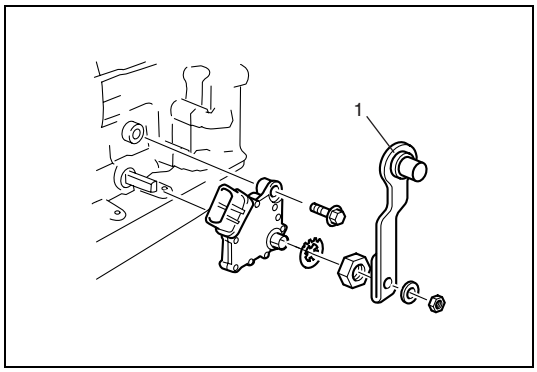

1) Shift manual select lever to “N” range.
2) Remove manual selector rod referring to “Selector Rod” in this section.
3) Remove manual selector rod (1).

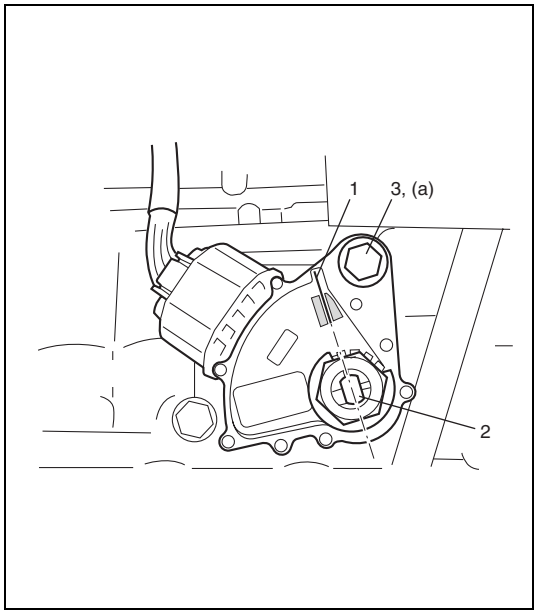

4) Check that head of shaft (2) and “N” range reference line (1) on transmission range sensor are aligned as shown in figure. If not, loosen sensor bolts (3) and align them.
5) Install manual selector lever.
6) Install manual selector rod referring to “Selector Rod” in this section.
7) Check that engine starts in “N” and “P” ranges but it does not start in “D”, “2”, “L” or “R” range. Also, check that back-up lamp lights in “R” range.

Tightening torque
Transmission range sensor bolts
(a): 13 N·m (1.3 kg-m, 9.5 lb-ft)

If faulty condition cannot be corrected by adjustment, disconnect transmission range sensor connector and check that continuity exists as shown by moving manual select lever.

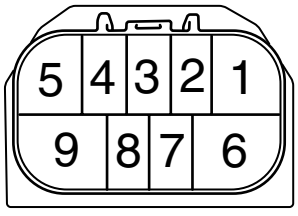

Sensor Position	Terminal No. 1	2	3	4	5	6	7	8	9
P	○		○			○			○
R		○	○						
N			○		○	○			○
D			○				○		
2			○	○					
L			○					○	

Output Shaft Speed Sensor Removal and Installation

Removal

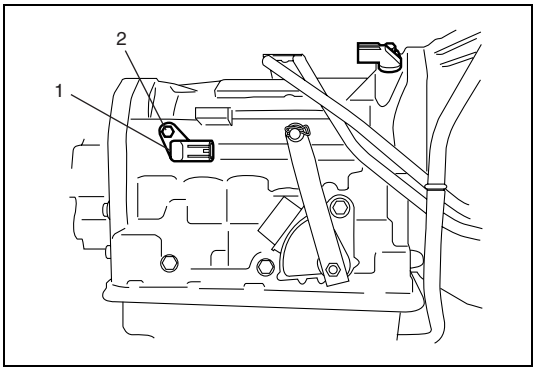

1) Disconnect negative cable at battery.
2) Disconnect output shaft speed sensor connector.
3) Remove output shaft speed sensor (1) by removing its bolt (2).

Installation

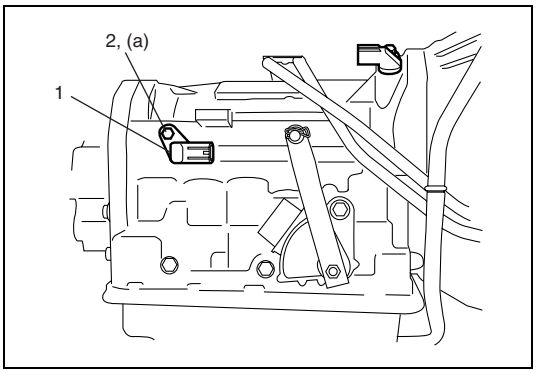

1) Apply A/T fluid to output shaft speed sensor O-ring.
2) Install output shaft speed sensor (1) to A/T case and tighten bolt (2) to specified torque.

Tightening torque
Output shaft speed sensor bolt
(a): 5.5 N·m (0.55 kg-m, 4.0 lb-ft)

3) Connect output shaft speed sensor connector (2) to output shaft speed sensor (1).
4) Connect negative cable to battery.

Output Shaft Speed Sensor Inspection

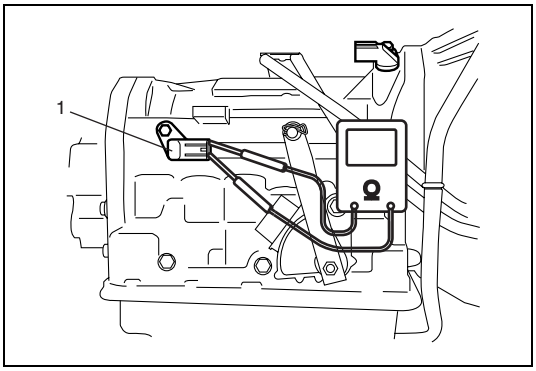

1) Disconnect negative cable at battery.
2) Disconnect output shaft speed sensor connector.
3) Check resistance between output speed sensor terminals.

Output shaft speed sensor resistance
Standard: 560 – 680 Ω at 20 °C (68 °F)

1. Output shaft speed sensor

Input Shaft Speed Sensor Removal and Installation

Removal

1) Disconnect negative cable at battery.

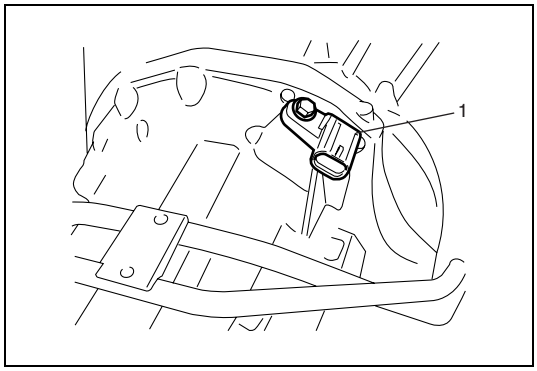

2) Disconnect input shaft speed sensor connector.
3) Remove input shaft speed sensor (1) by removing its bolt.

Installation

1) Apply A/T fluid to input shaft speed sensor O-ring.

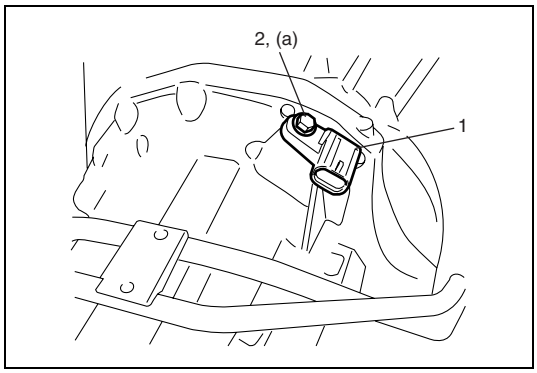

2) Install input shaft speed sensor (1) to A/T case and tighten bolt (2) to specified torque.

Tightening torque
Input shaft speed sensor bolt
(a): 5.5 N·m (0.55 kg-m, 4.0 lb-ft)

3) Connect input shaft speed sensor connector to input shaft speed sensor (1).
4) Connect negative cable to battery.

Input Shaft Speed Sensor Inspection

1) Disconnect negative cable at battery.

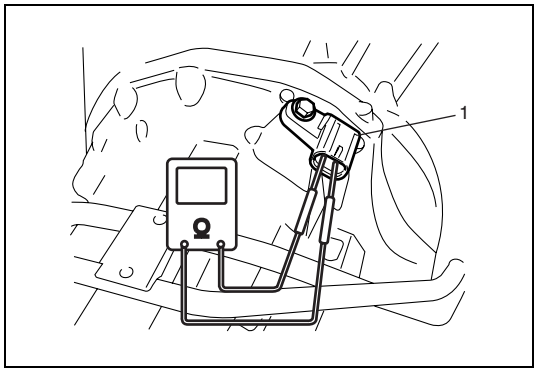

2) Disconnect input shaft speed sensor connector (2).
3) Check resistance between input shaft speed sensor terminals.

Input shaft speed sensor resistance
Standard: 560 – 680 Ω at 20 °C (68 °F)

1. Input shaft speed sensor

Throttle Position Sensor

Inspection

Check throttle position sensor referring to “Throttle Position Sensor” in Section 6E1.

Engine Coolant Temperature Sensor

Inspection

Check engine coolant temperature sensor referring to “Engine Coolant Temperature Sensor” in Section 6E1.

Solenoid Valves (Shift Solenoid Valves, TCC Solenoid Valve and Timing Solenoid Valve) Removal and Installation

Removal

1) Disconnect negative cable at battery.
2) Remove A/T fluid level gauge.
3) Lift up vehicle.
4) Remove drain plug and drain A/T fluid.
5) Install drain plug.

Tightening torque
A/T fluid drain plug: 17 N·m (1.7 kg-m, 12.5 lb-ft)

6) Remove exhaust pipe referring to “Exhaust System” in Section 6K.
7) Remove oil filler tube (1).

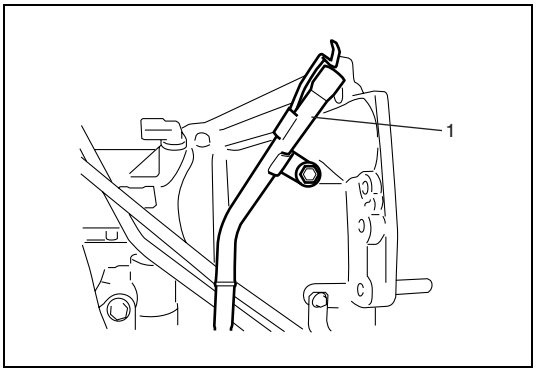

8) Remove A/T oil pan (1) and oil pan gasket.

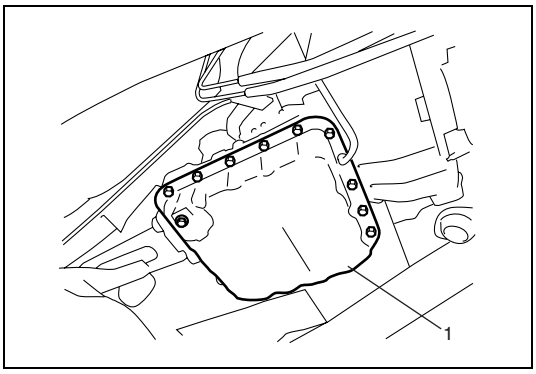

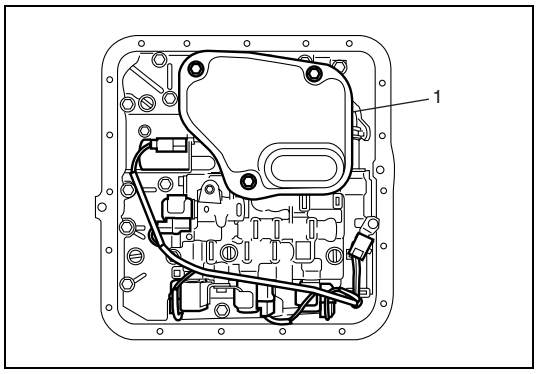

9) Remove oil strainer assembly (1).

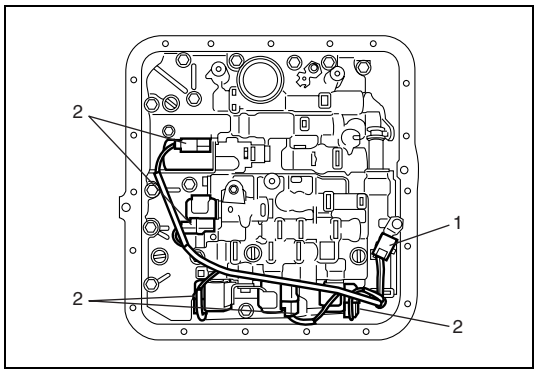

10) Remove transmission fluid temperature sensor (1) from sensor clamp.
11) Disconnect solenoid connectors (2).

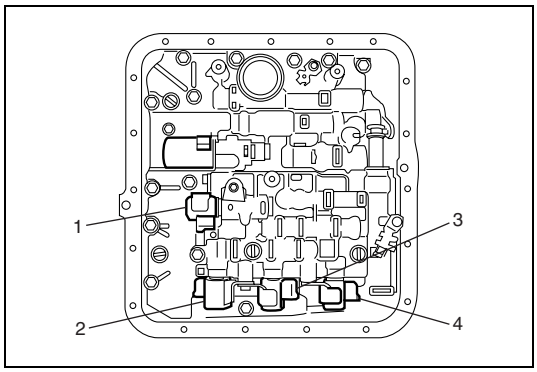

12) Remove TCC solenoid valve (1), shift solenoid valve-A (No.1) (2), shift solenoid valve-B (No.2) (3) and timing solenoid valve (4) by removing bolts.

Installation

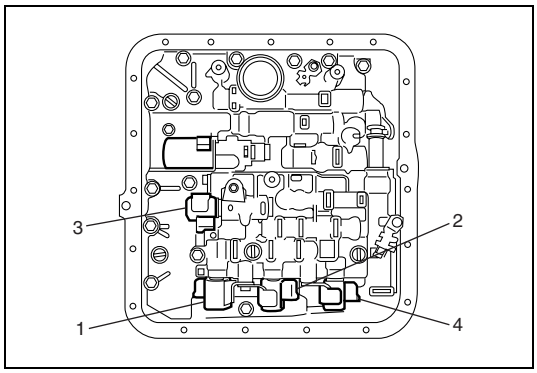

1) Install shift solenoid valve-A (No.1) (1), shift solenoid valve-B (No.2) (2), TCC solenoid valve (3) and timing solenoid valve (4).

Tightening torque
Solenoid valve bolts: 11 N·m (1.1 kg-m, 8.0 lb-ft)

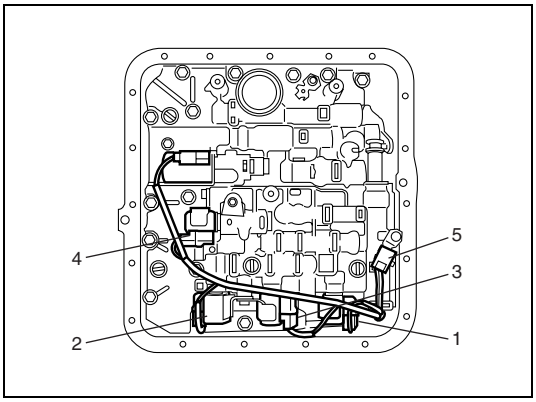

2) Connect solenoid connectors identifying their installing positions by wire color.

Solenoid coupler	Wire color
Shift solenoid valve-A (No.1) (2)	White
Shift solenoid valve-B (No.2) (3)	Black
Timing solenoid valve (1)	Yellow
TCC solenoid valve (4)	Light Green

3) Install transmission fluid temperature sensor (5) to sensor clamp.

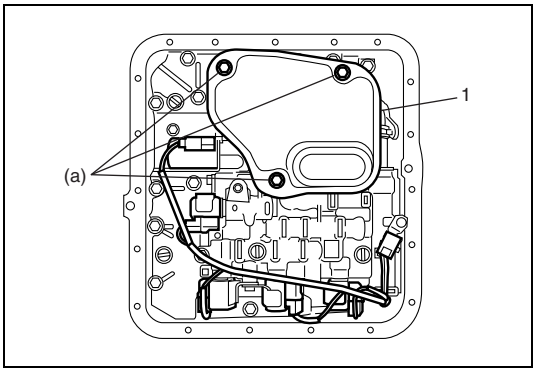

4) Install oil strainer assembly (1).

Tightening torque
Oil strainer bolts (a): 10 N·m (1.0 kg-m, 7.5 lb-ft)

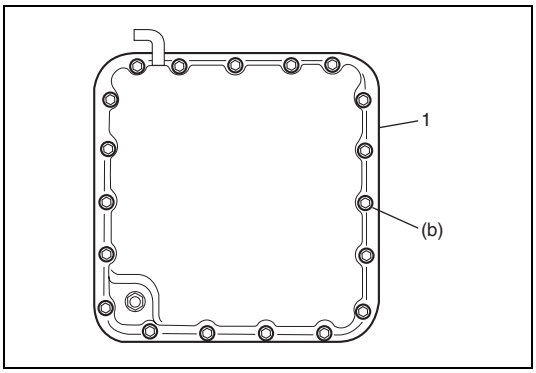

5) Install new oil pan gasket and oil pan (1).

Tightening torque
Oil pan fixing bolts (b): 11 N·m (1.1 kg-m, 8.0 lb-ft)

Solenoid Valves (Shift Solenoid Valves, TCC Solenoid Valve and Timing Solenoid Valve) Inspection

Resistance Check

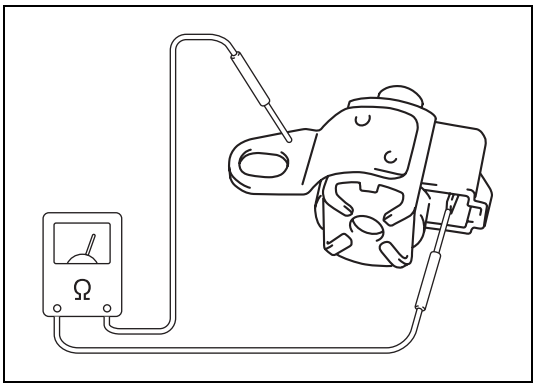

Shift solenoid valves, Timing solenoid valve and TCC solenoid valve resistance
Standard: 11 – 15 Ω at 20 °C (68 °F)

Operation Check

Shift solenoid valve-A (No.1), -B (No.2) and TCC solenoid valve

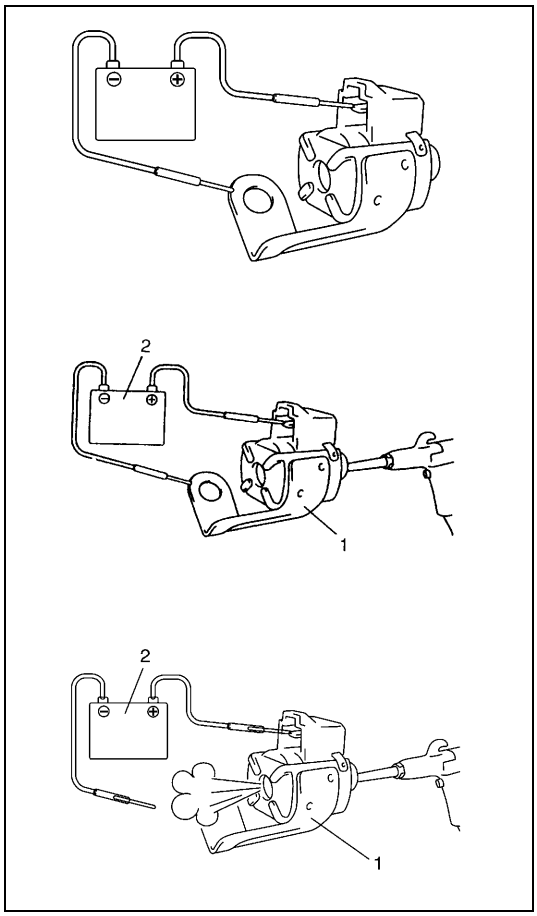

CAUTION:

- **Do not insert air gun against strainer installed on inlet of solenoid valve too deeply, when blowing air into solenoid valve. If not, the strainer will be damaged.**
- **Be very careful as dust etc. does not enter when solenoid valves are inspected.**

- Check that solenoid valve (1) actuate with click sound when battery voltage is conducted.
- When solenoid valve (1) is connected to battery (2), confirm that solenoid valve is close condition by blowing air (50 – 200 kPa, 0.5 – 2.0 kg/cm^2, 7 – 28.5 psi) into solenoid valve as shown in the figure.
- When solenoid valve (1) is not connected to battery (2), confirm that solenoid valve is open condition by blowing air (50 – 200 kPa, 0.5 – 2.0 kg/cm^2, 7 – 28.5 psi) into solenoid valve as shown in the figure.

NOTE:

Do not fail to inspect with air to prevent mistaken checking because return spring for valve is not installed into solenoid valve.

Timing solenoid valve

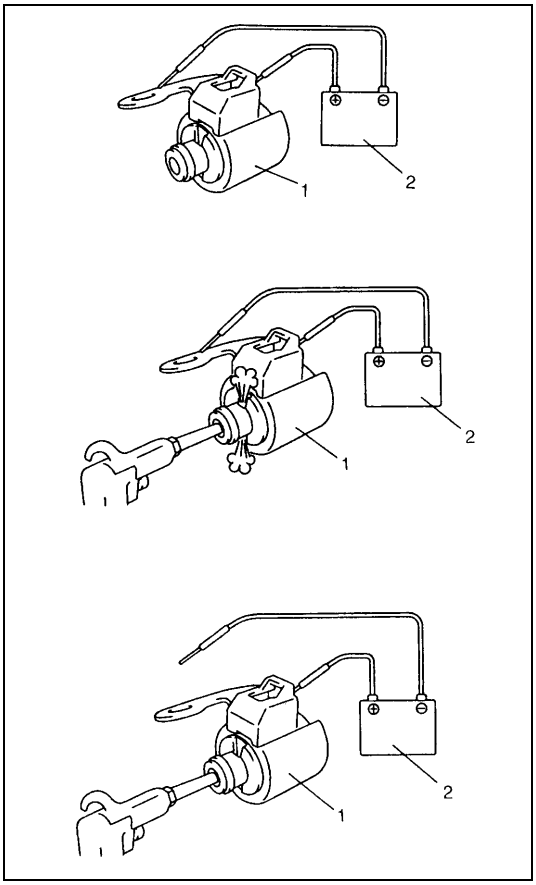

CAUTION:

- **Do not insert air gun against strainer installed on inlet of solenoid valve too deeply, when blowing air into solenoid valve. If not, the strainer will be damaged.**
- **Be very careful as dust etc. does enter when solenoid valves are inspected.**

- Check that solenoid valve (1) actuate with click sound when battery voltage is conducted.
- When timing solenoid valve (1) is connected to battery (2), confirm that timing solenoid valve is open condition by blowing air (50 – 200 kPa, 0.5 – 2.0 kg/cm^2, 7 – 28.5 psi) into solenoid valve as shown in the figure.
- When timing solenoid valve (1) is not connected to battery (2), confirm that timing solenoid valve is close condition by blowing air (50 – 200 kPa, 0.5 – 2.0 kg/cm^2, 7 – 28.5 psi) into solenoid valve as shown in the figure.

NOTE:

Do not fail to inspect with air to prevent mistaken checking because return spring for valve is not installed into solenoid valve.

Pressure Control Solenoid Valve Removal and Installation

Removal

1) Disconnect negative cable at battery.
2) Remove A/T fluid level gauge.
3) Lift up vehicle.
4) Remove drain plug and drain A/T fluid.
5) Install drain plug.

Tightening torque
A/T fluid drain plug: 17 N·m (1.7 kg-m, 12.5 lb-ft)

6) Remove exhaust pipe referring to “Exhaust System” in Section 6K.

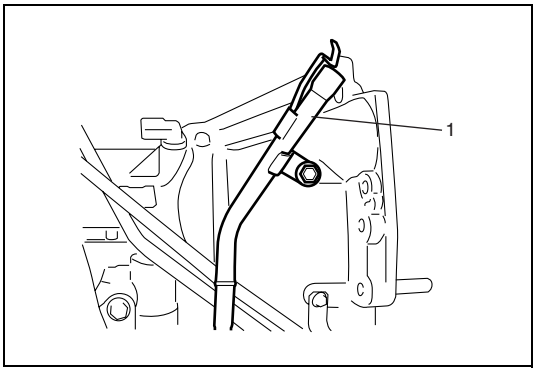

7) Remove oil filler tube (1).

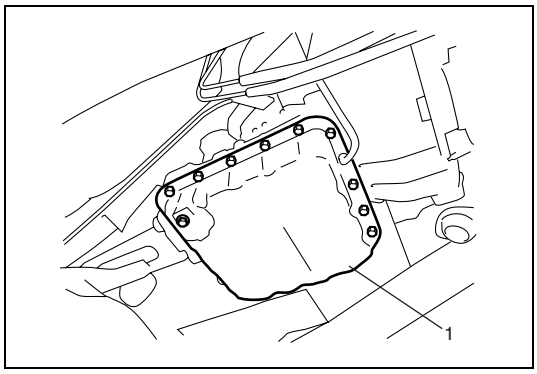

8) Remove A/T oil pan (1) and oil pan gasket.

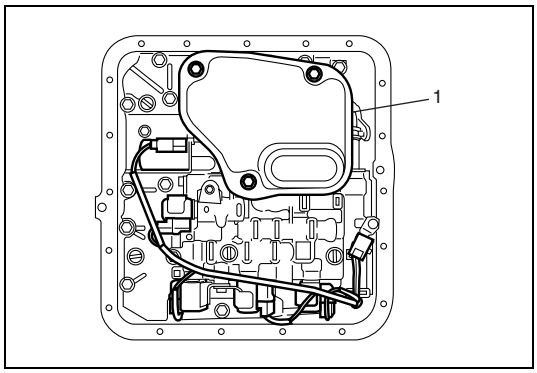

9) Remove oil strainer assembly (1).

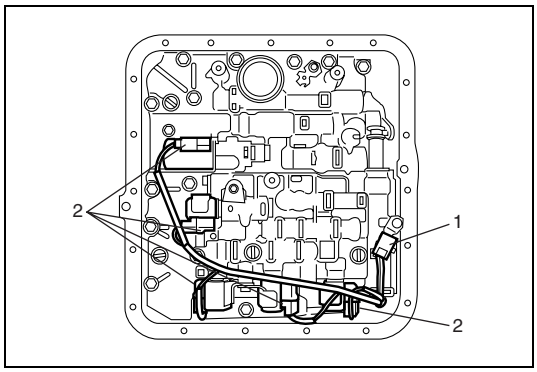

10) Remove transmission fluid temperature sensor (1) from sensor clamp.
11) Disconnect solenoid connectors (2).

12) Remove valve body assembly referring to “Unit Disassembly” in this section.
13) Remove pressure control solenoid valve referring to “Valve Body Assembly” in this section.

Installation

Reverse removal procedure to install pressure control solenoid valve and valve body assembly noting the following points.

- For detail of pressure control solenoid valve installation, refer to “Valve Body Assembly” in this section.
- For detail of valve body assembly installation, refer to “Unit Assembly” in this section.
- For detail of installing wire harness for solenoid valves and sensor, refer to “Unit Assembly” in this section. Use new O-rings.
- For detail of A/T oil pan and oil strainer assembly installation, refer to “Unit Assembly” in this section. Use new oil pan gasket.
- Pour A/T fluid and check fluid level according to procedure described in “Fluid Change” in this section.
- Check for fluid leakage after warning up A/T.

Pressure Control Solenoid Valve Inspection

Resistance Check

CAUTION:
Be very careful as dust etc. does enter when pressure control solenoid valve is inspected.

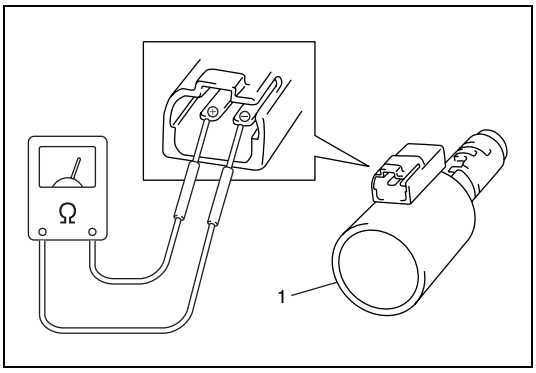

Measure resistance between pressure control solenoid valve (1) terminals.

Pressure control solenoid valve resistance
Standard: 5.0 – 5.6 Ω (at 20 °C (68 °F))

Operation Check

Check pressure control solenoid valve operation in the either manner of the followings.

[Using regulated DC power supply]

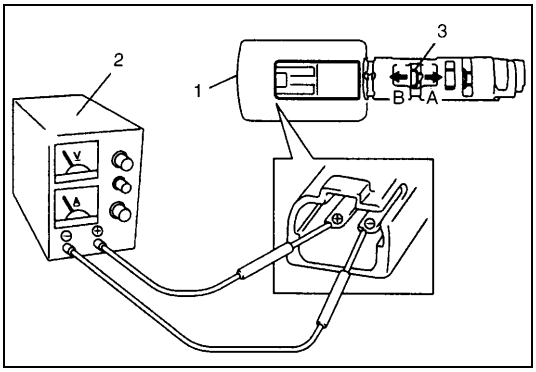

1) Connect pressure control solenoid valve (1) to regulated DC power supply (2) as shown in the figure.
2) Turn regulated DC power supply switch ON, increase voltage of power supply keeping current within 1.0 A.
3) Check for gradual movement of valve (3) in the direction of arrow “A” as voltage is increased.
4) Check for movement of valve (3) in the direction of arrow “B” as voltage is decreased.
5) Turn power supply switch OFF.

CAUTION:
Do not pass current 1.0 A or more, or pressure control solenoid is burned out.

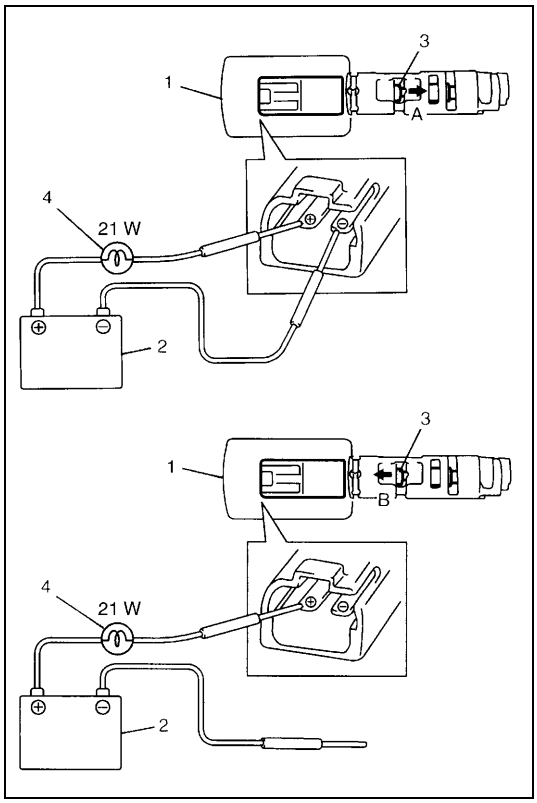

[Not using regulated DC power supply]

1) Connect pressure control solenoid valve (1) to battery (2) setting the 21 W bulb (4) on the way as shown in the figure.
2) Check for movement of valve (3) in the direction of arrow “A”.
3) Disconnect pressure control solenoid valve (1) from battery (2) and check for movement of valve (3) in the direction of arrow “B” as shown in the figure.

CAUTION:
Set 21 W bulb on the way, or pressure control solenoid valve is burned out.

Transmission Control Module (TCM) Removal and Installation

CAUTION:
- **TCM and ECM consists of highly precise parts, therefore when handling it, be careful not to expose to excessive shock.**
- **When replacing TCM with used one, all learned contents, which have been stored in TCM memory by executing learning control, should be initialized after replacement.**

Removal

1) Disconnect negative cable at battery.
2) If the vehicle is equipped with air bag system, disable air bag system. Refer to “Disabling Air Bag System” in Section 10B.

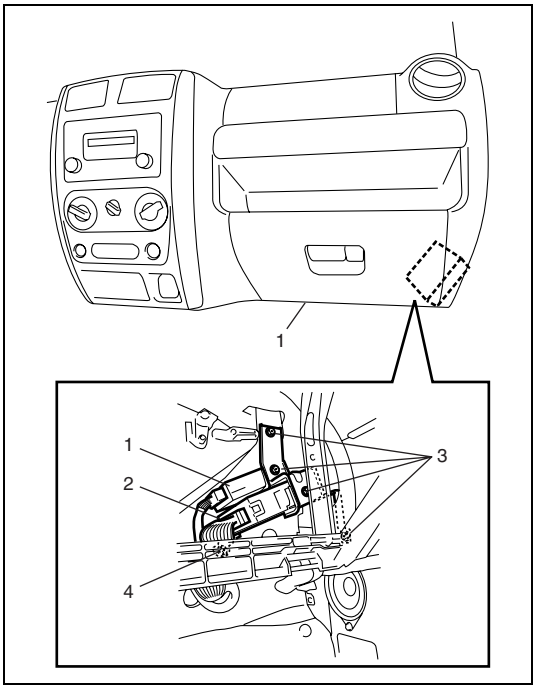

3) Remove glove box (1) and dash side trim.
4) Disconnect connectors (1) from TCM (2) and ECM.
5) Remove TCM (1), ECM (2) and each brackets removing its bolts (3) and nut (4).

Installation

Reverse removal procedure noting the following.

- Connect TCM and ECM connectors securely.
- If the vehicle is equipped with air bag system, be sure to enable air bag system after TCM is back in place. Refer to "Enabling Air Bag System" in Section 10B.

Learning Control Initialization

Learning Control Initialization Using SUZUKI Scan Tool

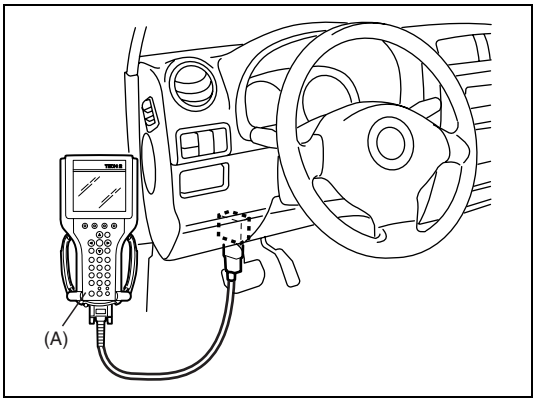

1) Connect scan tool to DLC with ignition switch OFF.
2) Start engine and shift selector lever to "P" range.
3) Select "Misc Test" mode on scan tool.
4) Perform "A/T learned initialize" on scan tool.

Special tool
(A): SUZUIKI scan tool

Learning Control Initialization Using Monitor Connector

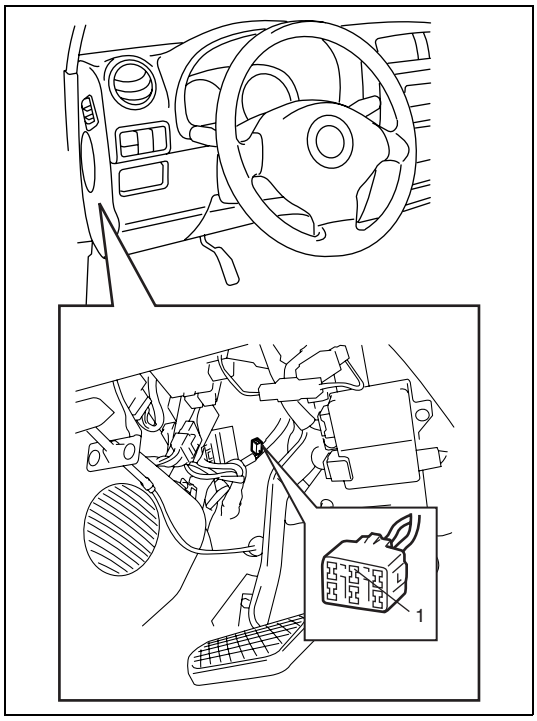

1) Clear DTC referring to “DTC Clearance” in this section.
2) Using service wire, connect diagnosis switch terminal (1) and body ground.
3) Turn ignition switch ON but engine stop.
4) With brake pedal and accelerator pedal depressed fully, repeat shifting “2” range to “L” range of select lever 5 times within 10 seconds.
5) Confirm that transmission warning light is turned OFF to complete memory initialization.

NOTE:

When initialization is achieved, transmission warning light neither light nor flash unless diagnosis switch terminal is once disconnected from body ground. If initialization is failed, re-try initializing procedure.

Transmission Fluid Temperature Sensor Removal and Installation

Removal

1) Disconnect negative cable at battery.
2) Remove A/T fluid level gauge.
3) Lift up vehicle.
4) With engine is cool, remove drain plug and drain A/T fluid.
5) Install drain plug. (Refer to “Fluid Change” in this section.)
6) Remove exhaust pipe referring to “Exhaust System” in Section 6K.

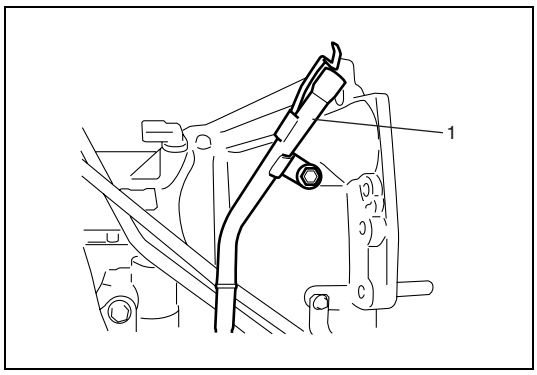

7) Remove oil filler tube (1).

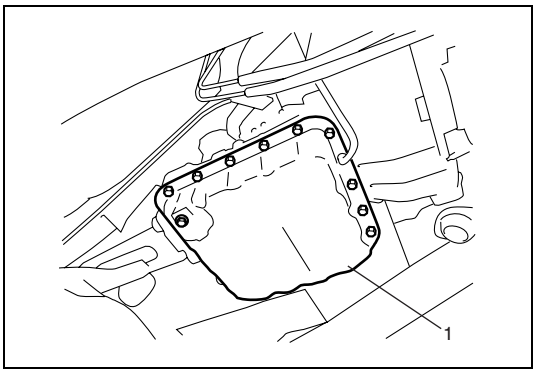

8) Remove A/T oil pan (1).

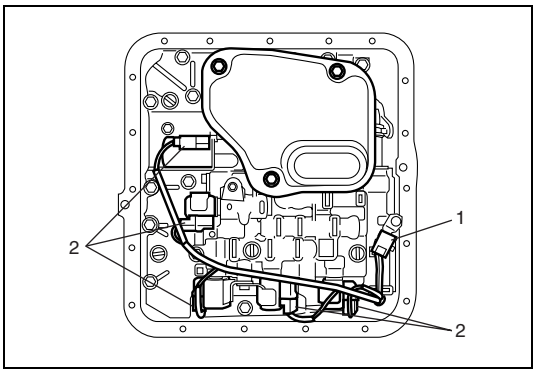

9) Remove transmission fluid temperature sensor (1) from sensor clamp.
10) Disconnect solenoid connectors (2).

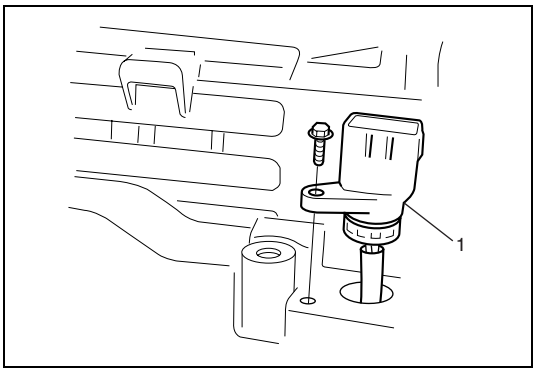

CAUTION:
When pulling solenoid wire harness out of transmission case, take care not to damage transmission fluid temperature sensor at narrow exit of case.
Careless sensor treatment might cause sensor malfunction.

11) Remove solenoid wire harness (1).

Installation

Reverse removal procedure to install solenoid wire harness and valve body assembly noting the following points.

- For details of valve body assembly and their connectors installation, refer to “Unit Assembly” in this section.
- For details of A/T oil pan installation, refer to “Unit Assembly” in this section. Use new oil pan gasket.

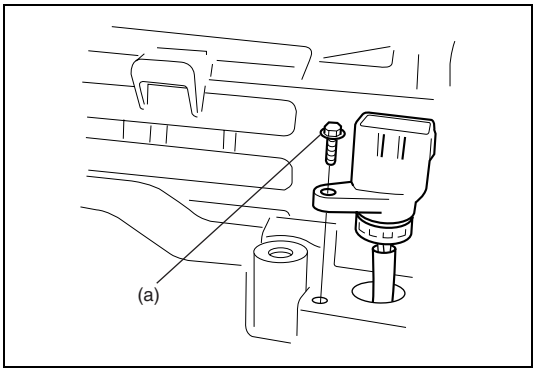

- Tighten valve body harness connector bolt to specified torque.

Tightening torque
Valve body harness connector fixing bolt
(a): 5.5 N·m (0.55 kg-m, 4.0 lb-ft)

- Pour A/T fluid and check fluid level according to procedure described in “Fluid Change” in this section.
- Check for fluid leakage after warning up A/T.

Transmission Fluid Temperature Sensor Inspection

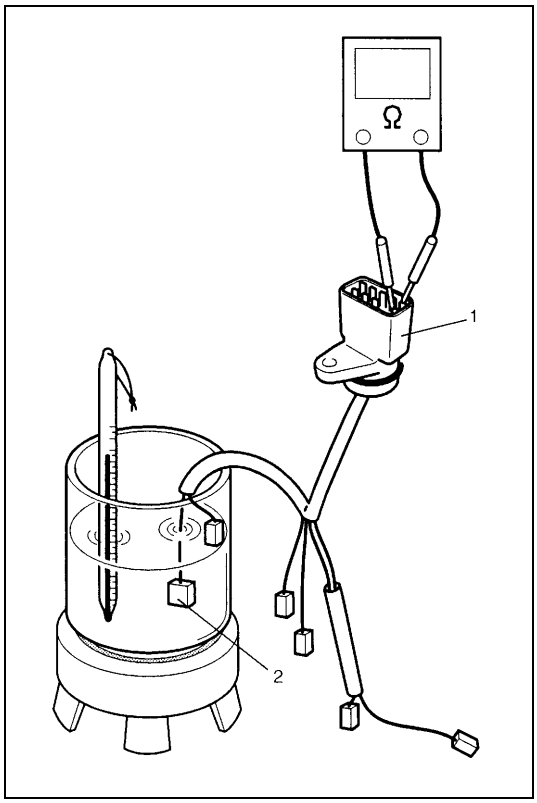

1) Warm up transmission fluid temperature sensor (2). Check resistance between terminals of valve body harness connector (1). Thus make sure its resistance decrease as its temperature increase.

Transmission fluid temperature sensor resistance

Temperature	Resistance
10 °C (50 °F)	6.4 kΩ
25 °C (77 °F)	3.5 kΩ
110 °C (230 °F)	0.2 kΩ

Extension Case Oil Seal Replacement

1) Lift up vehicle and drain automatic transmission fluid.
2) Remove following part.
   - Exhaust pipe (refer to “Exhaust System” in Section 6K.)
   - Propeller shaft No.1 (refer to “Propeller Shafts” in Section 4B.)

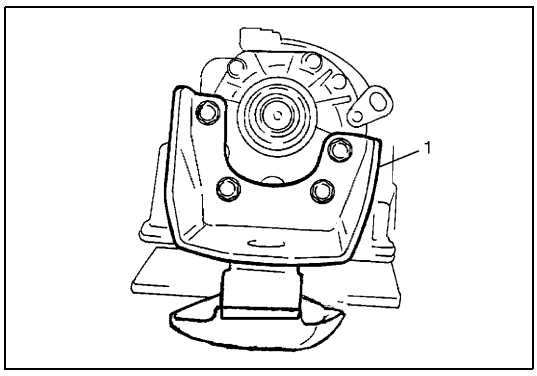

3) With transmission held up on jack, remove engine rear mounting bracket (1).
4) Remove extension case oil seal using flat end rod or like.

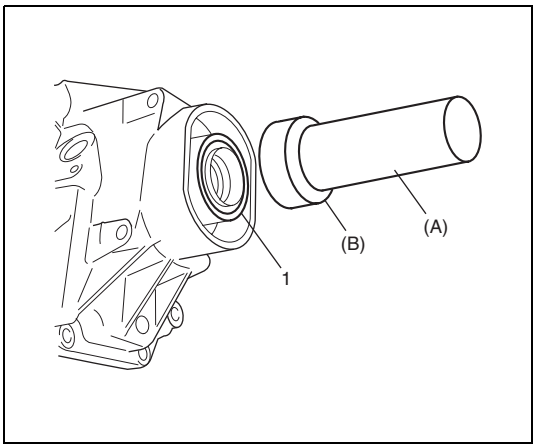

5) Apply grease to new extension case oil seal lip.

: Grease 99000-25030

6) Install new extension case oil seal (1) using special tools.

NOTE:

For oil seal installation, press-fit oil seal so that transmission case end face is flush with oil seal end face.

Special tool
(A): 09913-84510
(B): 09926-26020

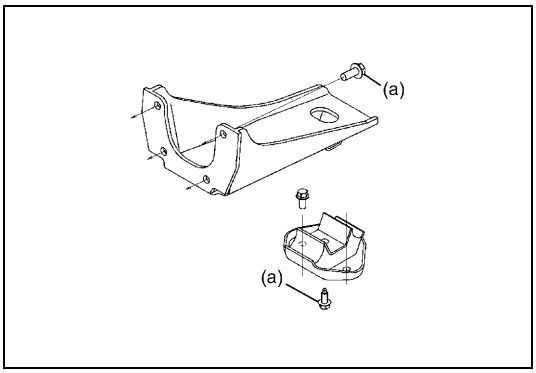

7) Install engine rear mounting bracket.

Tightening torque
Engine rear mounting bracket bolt
(a): 25 N·m (2.5 kg-m, 18.0 lb-ft)

8) Install following parts.
   - Propeller shaft No.1 (refer to “Propeller Shafts” in Section 4B.)
   - Exhaust pipe (refer to “Exhaust System” in Section 6K.)
9) Pour A/T fluid referring to “Fluid Change” in this section.

Interlock Cable Removal and Installation (if equipped)

NOTE:

Don’t bend interlock cable excessively when removing and installing it, or system will not operate correctly.

Removal

1) Disconnect negative cable at battery and disable air bag system, referring to “Disabling Air Bag System” in Section 10B.
2) Remove steering upper and lower cover.

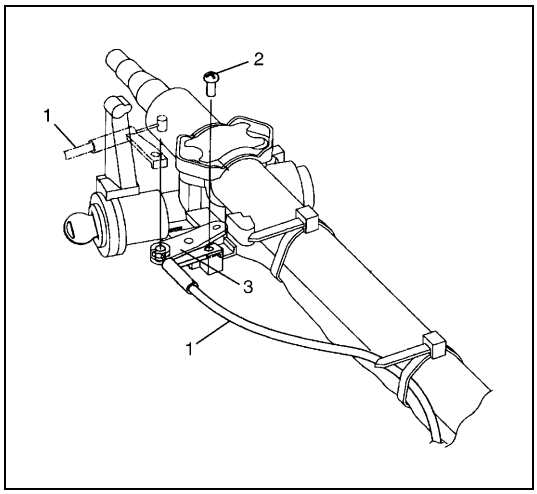

3) Remove interlock cable (1) clamp screw (2) located at ignition switch and disconnect interlock cable from key cylinder cam (3) with ignition switch turned at “ACC” position and set select lever “N” position.

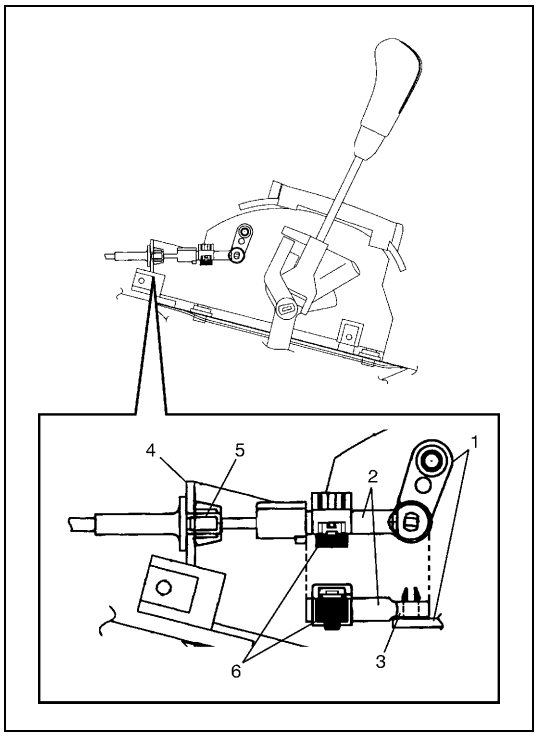

4) Remove console box.
   Unlock lock button (6).
5) Remove detach cable end (2) from key interlock cam (1) while pressing claws of release cam boss (3).
   At this time, be careful not to cause damage to its claws.
6) Remove interlock cable from selector bracket (4) while pressing claws of cable casing cap (5).
   At this time, be careful not to cause damage to its claws.
7) Remove interlock cable.

Installation

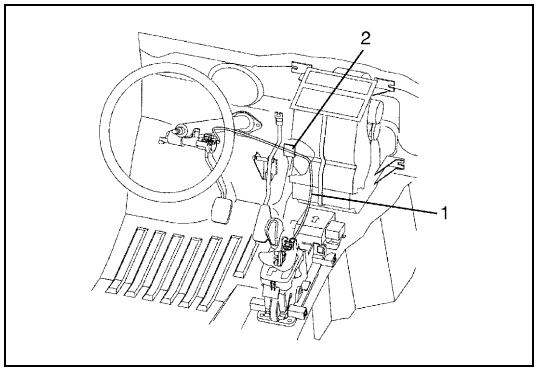

1) Install interlock cable (1) as shown in figure.
   Be sure that interlock cable cover does not touch accel pedal.

2. Tape

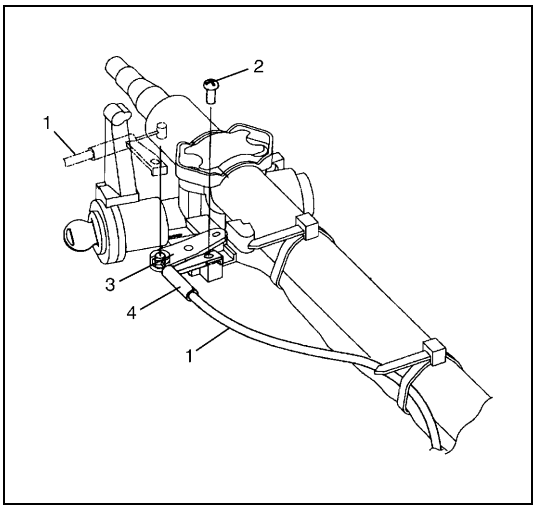

2) Connect cable (1) end to steering lock and tighten cable clamp screw (2) securely with holding cable bracket (4) so as not to turn.

Tightening torque
Interlock cable screw (a): 2.2 N·m (0.22 kg-m, 1.6 lb-ft)

3. Key cylinder cam

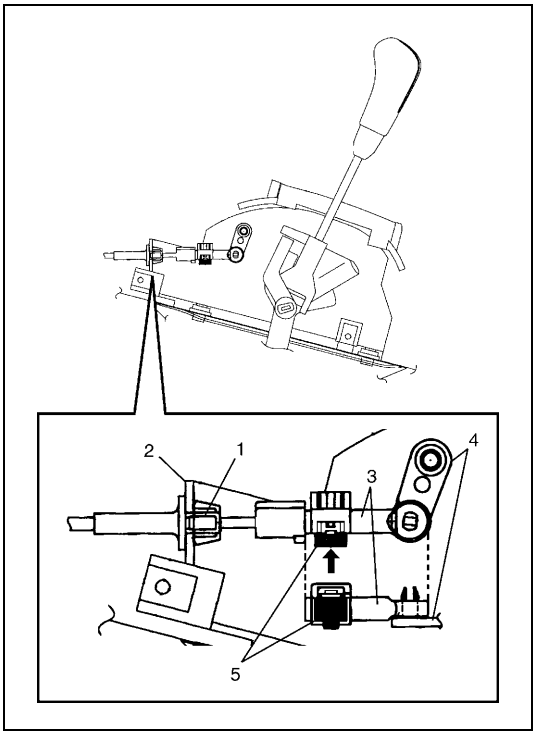

3) Install cable casing cap (1) to selector bracket (2).
4) Install eye end (3) to key interlock cam (4).
5) After confirm that select lever “N” position and key setting “ACC” position. Push lock button (5) completely in arrow direction.
6) With selector lever set at “P” position, turn ignition key to “ACC” position and then check for following conditions.
   - With knob button released, ignition key can be turned from “ACC” position to “LOCK” position.
   - With knob button released, ignition key cannot be turned from “ACC” position to “LOCK” position.
   - Shift selector lever from “P” to “R” position with ignition key turned “ON” position and brake pedal depressed.
7) Install steering upper and lower cover.
8) Connect negative cable at battery and enable air bag system, referring to “Enabling Air Bag System” in Section 10B.

Automatic Transmission Assembly

Components

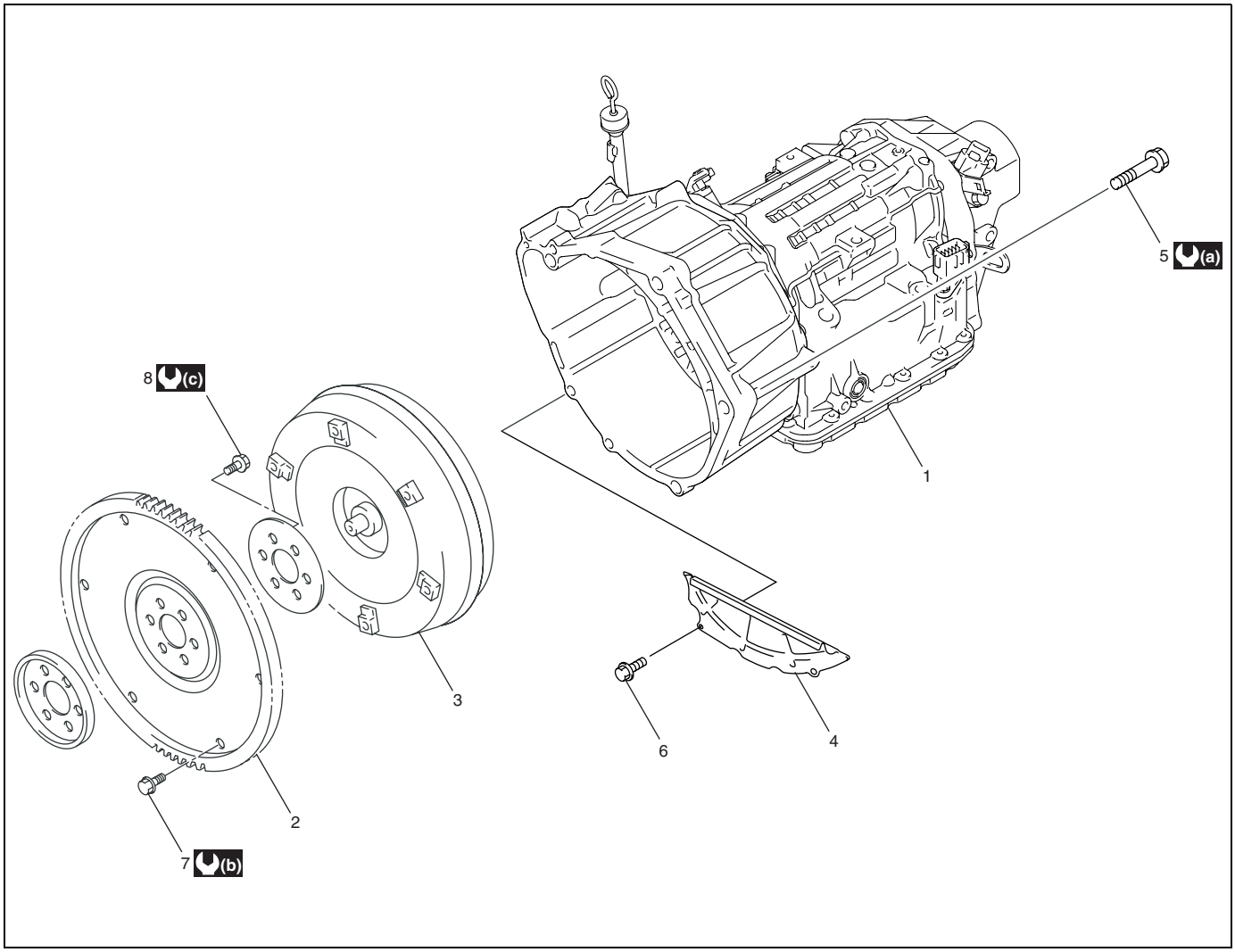

1. Automatic transmission assembly	5. Automatic transmission mounting bolt	(a) 80.0 N·m (8.0 kg-m, 58.0 lb-ft)
2. Drive plate	6. Torque converter housing lower plate bolt	(b) 19.0 N·m (1.9 kg-m, 14.0 lb-ft)
3. Torque converter	7. Drive plate to torque converter bolt	(c) 69.0 N·m (6.9 kg-m, 50.0 lb-ft)
4. Torque converter housing lower plate	8. Drive plate bolt	

Automatic Transmission Assembly Dismounting and Remounting

Dismounting

1) Remove following parts
   - Negative cable from battery
   - A/T fluid level gauge
   - Exhaust pipe (refer to “Exhaust System” in Section 6K.)
   - Selector rod (refer to “Selector rod” in this section.)
   - Propeller shafts No.1 and No.2 (refer to “Propeller Shafts” in Section 4B.)

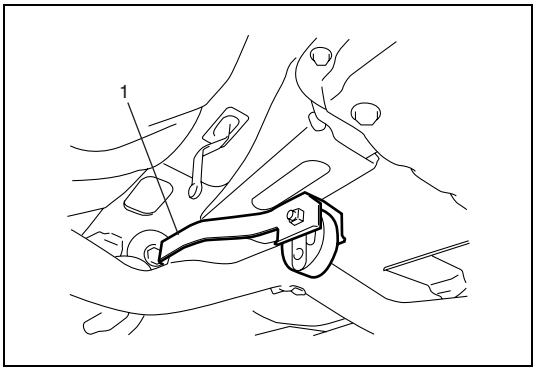

2) Remove exhaust pipe mounting bracket (1).

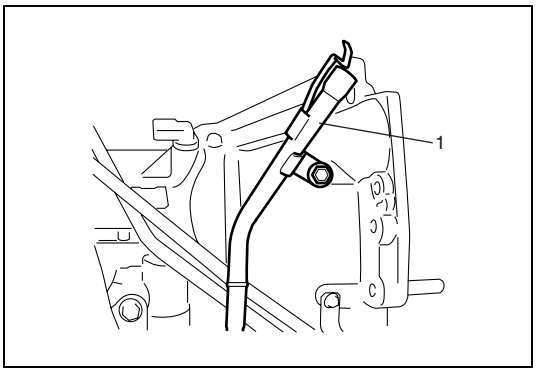

3) Remove oil filler tube (1).

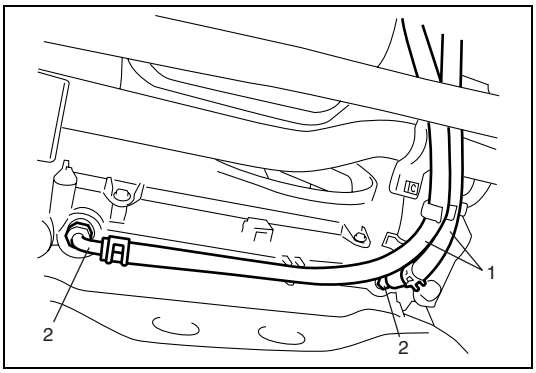

4) Remove oil cooler hoses (1) from radiator (2).

NOTE:

To avoid leakage of A/T fluid, plug open ends of oil cooler pipes and hoses right after they are disconnected.

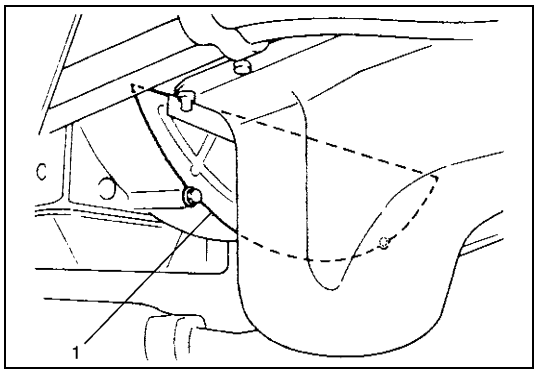

5) Remove torque converter housing lower plate (1).

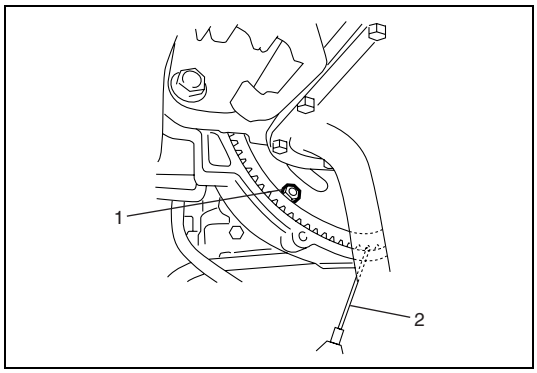

6) Remove drive plate bolts (1).
   To lock drive plate, engage a flat end rod (2) with drive plate gear.
7) Remove starting motor referring to “Cranking System” in Section 6G.

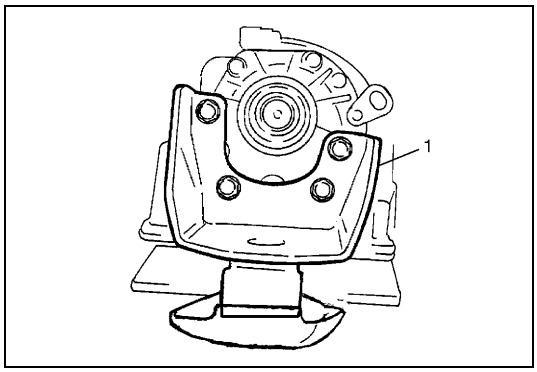

8) With transmission held up on jack, remove transmission rear mounting bracket (1).

9) Move transmission to the lower a little and disconnect couplers. (3 couplers from wire harness and 1 from shift switch.)
10) Remove bolts and nuts fastening engine and transmission.
11) Move transmission to the rear a little and lower it including torque converter.

WARNING:

Be sure to keep transmission with torque converter horizontal or facing up throughout the work. Should be tilted with torque converter down, converter may fall off and cause personal injury and A/T fluid may flow out.

NOTE:

When detaching transmission from engine, move it parallel with crankshaft and use care so as not to apply excessive force to drive plate and torque converter.

Remounting

1) Make sure that torque converter is installed correctly to transmission.
   Refer to “Unit Assembly” in this section.

WARNING:

Be sure to keep transmission with torque converter horizontal or facing up throughout the work. Should it be tilted with torque converter down, converter may fall off and cause personal injury.

2) Reverse dismounting procedure for remounting noting the following.
   - Clamp wiring harness and hoses securely.
   - Refer to “Automatic Transmission Assembly Components” in this section for fastener specified torque.
   - Follow fluid level check procedure in “Maintenance Service” in this section for refilling A/T fluid, its level adjusting and fluid specification.
   - Connect battery, and confirm that engine and transmission function acceptably.
   - When remounting drive plate use specified bolts.

Unit Repair

Automatic Transmission Unit Components

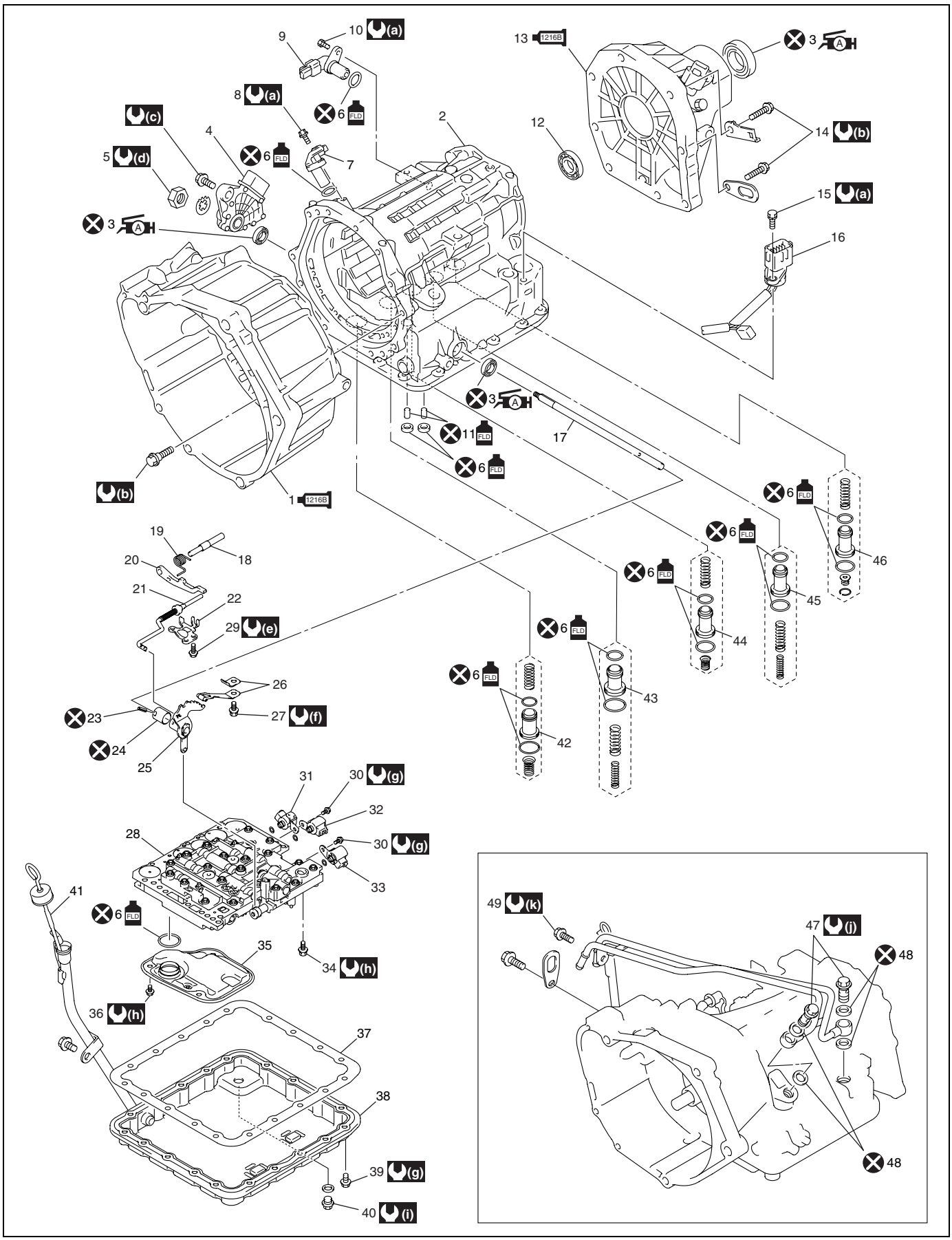

1216G	1. Torque converter housing : Apply sealant 99000-31230 to mating surface.	22. Parking lock pawl bracket	43. O/D and 2nd coast brake accumulator piston
	2. Transmission case	23. Spring pin	44. Reverse clutch accumulator piston
A H	3. Oil seal : Apply grease 99000-25010 to oil seal lip.	24. Spacer	45. 2nd brake accumulator piston
	4. Transmission range sensor	25. Manual shift lever	46. Direct clutch accumulator piston
	5. Transmission range sensor bolt	26. Manual shift lever spring	47. Union bolt
	6. O-ring	27. Manual shift lever spring bolt	48. Washer
	7. Input shaft speed sensor	28. Valve body assembly	49. Fluid cooler pipe bolt
	8. Input shaft speed sensor bolt	29. Parking lock pawl bracket bolt	(a) 5.5 N·m (0.55 kg-m, 4.0 lb-ft)
	9. Output shaft speed sensor	30. Solenoid valve bolt	(b) 25 N·m (2.5 kg-m, 18.0 lb-ft)
	10. Output shaft speed sensor bolt	31. Shift solenoid valve-A (No.1)	(c) 13 N·m (1.3 kg-m, 9.5 lb-ft)
	11. Brake drum gasket	32. Shift solenoid valve-B (No.2)	(d) 7 N·m (0.7 kg-m, 5.5 lb-ft)
	12. Output shaft bearing	33. Timing solenoid valve	(e) 8 N·m (0.8 kg-m, 6.0 lb-ft)
1216G	13. Extension case : Apply sealant 99000-31230 to mating surface.	34. Valve body bolt	(f) 15 N·m (1.5 kg-m, 11.0 lb-ft)
	14. Rear extension case bolt	35. Oil strainer	(g) 11 N·m (1.1 kg-m, 8.0 lb-ft)
	15. Valve body harness connector fixing bolt	36. Oil strainer bolt	(h) 10 N·m (1.0 kg-m, 7.5 lb-ft)
	16. Valve body harness connector	37. Oil pan gasket	(i) 17 N·m (1.7 kg-m, 12.5 lb-ft)
	17. Manual shift shaft lever shaft	38. Oil pan	(j) 28 N·m (2.8 kg-m, 20.5 lb-ft)
	18. Parking lock pawl shaft	39. Oil pan fixing bolt	(k) 6 N·m (0.6 kg-m, 4.5 lb-ft)
	19. Spring	40. A/T fluid drain plug	FLD Apply automatic transmission fluid.
	20. Parking lock pawl	41. A/T fluid level gauge	Do not reuse.
	21. Parking lock rod	42. Forward clutch accumulator piston	

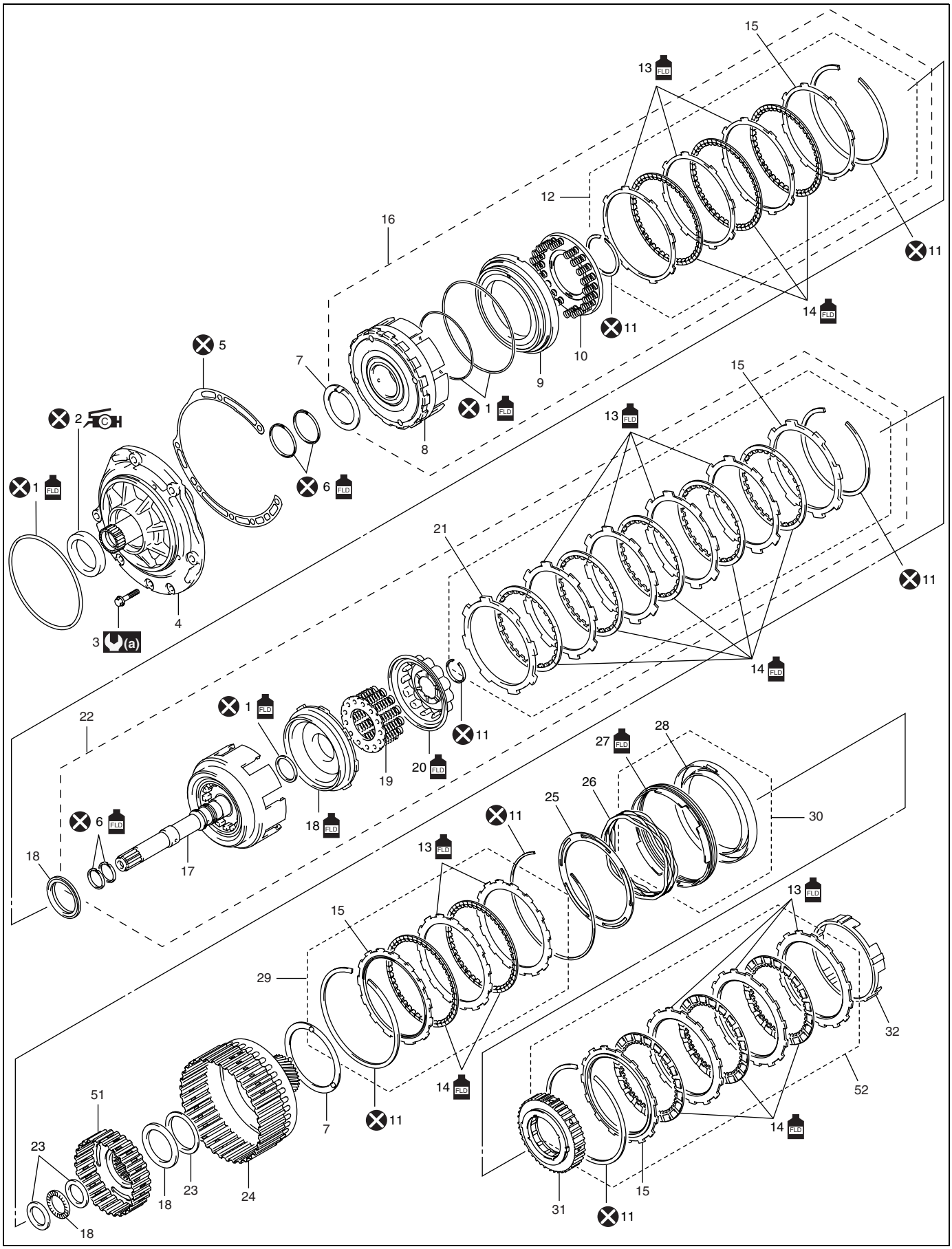
15
13 FLD
12
16
11
14 FLD
11
10
9
7
5
1 FLD
8
2
6 FLD
1 FLD
4
3 (a)
15
13 FLD
21
11
14 FLD
22
1 FLD
11
19
20 FLD
6 FLD
18 FLD
17
18
27 FLD
28
26
25
11
30
13 FLD
15
29
13 FLD
14 FLD
32
52
14 FLD
51
23
18
23
24
7
11
31
15
11
18

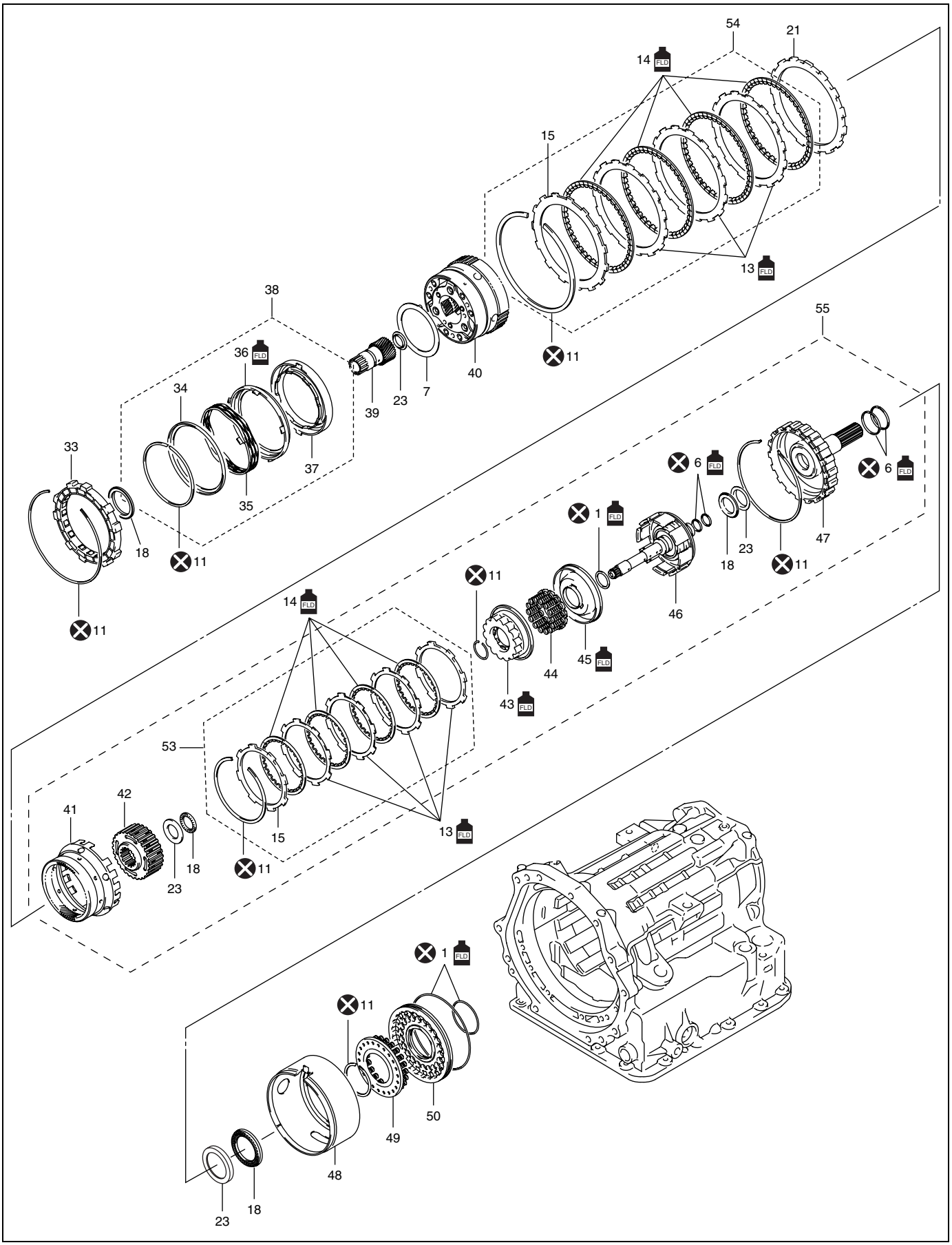
54
21
14 FLD
15
13 FLD
11
38
36 FLD
34
37
35
39
23
7
40
55
33
18
11
11
6 FLD
6 FLD
1 FLD
18
23
47
11
46
11
14 FLD
44
45 FLD
43 FLD
53
41
42
15
13 FLD
11
23
18
1 FLD
11
50
49
48
23
18

1. O-ring	21. Retaining plate	41. Ring gear
2. Oil seal : Apply grease 99000-25030 to oil seal lip.	22. Forward clutch & input shaft assembly	42. Direct clutch hub
3. Oil pump assembly bolt	23. Bearing race	43. Direct clutch balancer
4. Oil pump assembly	24. Front sun gear	44. Direct clutch piston return spring
5. Gasket	25. Brake piston return spring seat	45. Direct clutch piston
6. Seal ring	26. Brake piston return spring	46. Intermediate shaft
7. Thrust washer	27. Brake piston	47. Output shaft
8. Reverse clutch drum	28. Brake piston cylinder	48. 1st and reverse brake apply tube
9. Reverse clutch piston	29. O/D and 2nd coast brake disk set	49. 1st and reverse brake piston return spring
10. Reverse clutch piston return spring	30. O/D and 2nd coast brake piston assembly	50. 1st and reverse brake piston
11. Snap ring	31. One-way clutch No.1	51. Forward clutch hub
12. Reverse clutch disc set	32. 2nd brake apply tube	52. 2nd brake disc set
13. Friction plate	33. One-way clutch No.2	53. Direct clutch assembly
14. Friction disc	34. 2nd brake piston return spring seat	54. 1st and reverse brake disc set
15. Separator plate	35. 2nd brake piston return spring	55. Direct clutch & output shaft assembly
16. Reverse clutch assembly	36. 2nd brake piston	(a) 12 N·m (1.2 kg-m, 9.0 lb-ft)
17. Input shaft	37. 2nd brake cylinder	FLD Apply automatic transmission fluid.
18. Bearing	38. 2nd brake piston assembly	Do not reuse.
19. Forward clutch piston return spring	39. Rear sun gear	
20. Forward clutch balancer	40. Planetary gear assembly	

Automatic Transmission Unit Disassembly

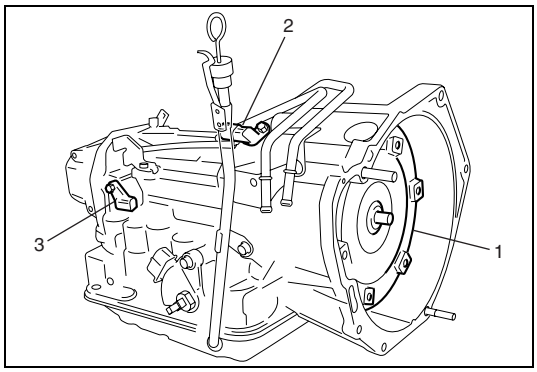

1) Remove torque converter (1).
2) Remove input shaft speed sensor (2).
3) Remove output shaft speed sensor (3).

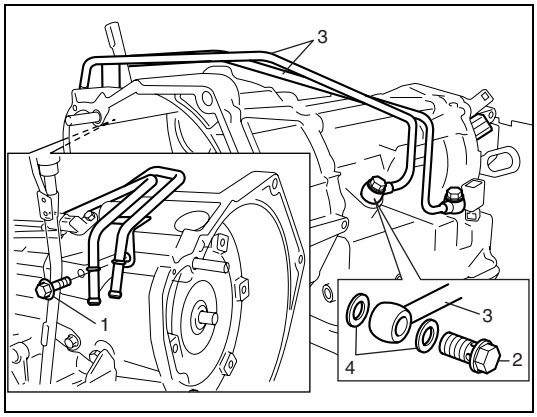

4) Remove fluid cooler pipe bolts (1) and union bolts (2), and then remove fluid cooler pipes (3) and washers (4).

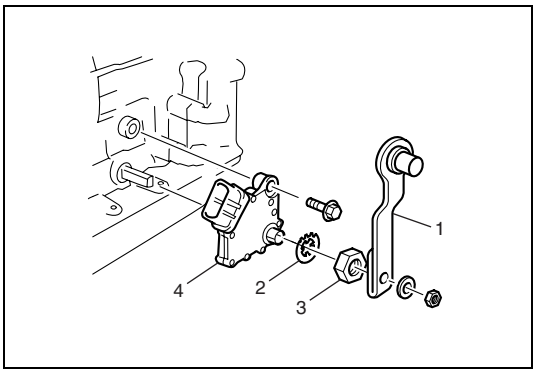

5) Remove manual select lever (1).
6) Uncaulk lock washer (2), and then remove lock nut (3) and lock washer (2).
7) Remove transmission range sensor (4).

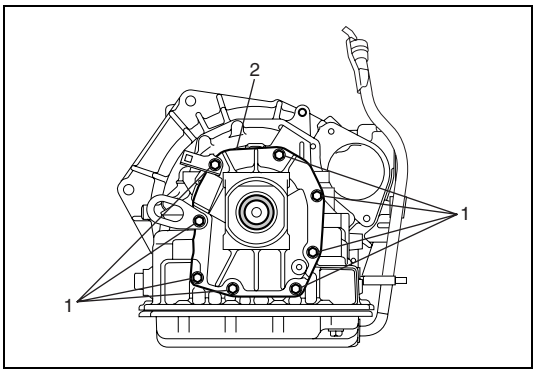

8) Remove 8 bolts (1), and then remove rear extension case (2).

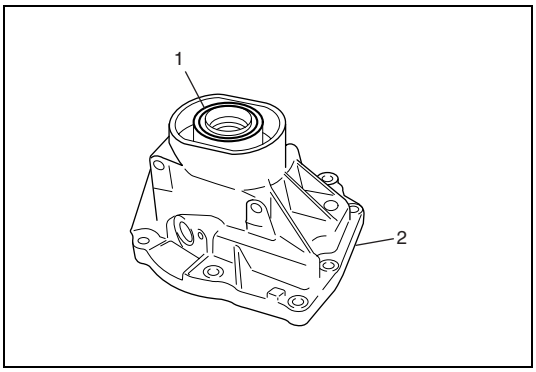

9) Remove oil seal (1) from extension case (2).

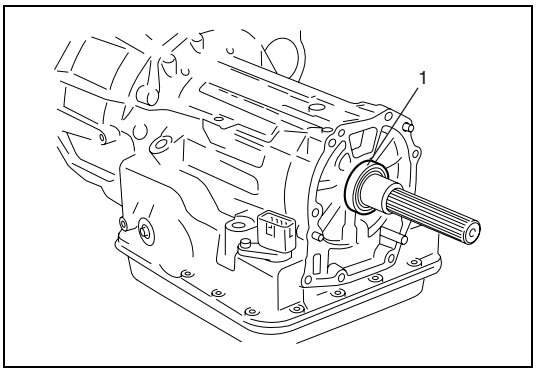

10) Remove output shaft bearing (1).

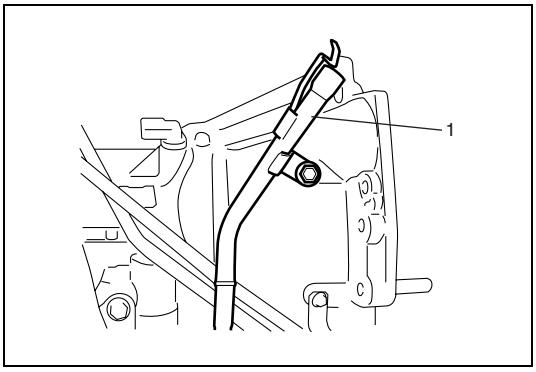

11) Remove oil filler tube (1).

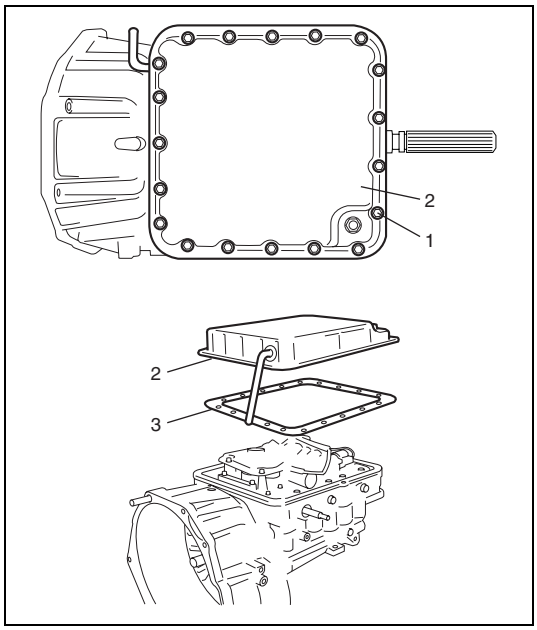

12) Remove 19 oil pan bolts (1), and then remove oil pan (2) and gasket (3).

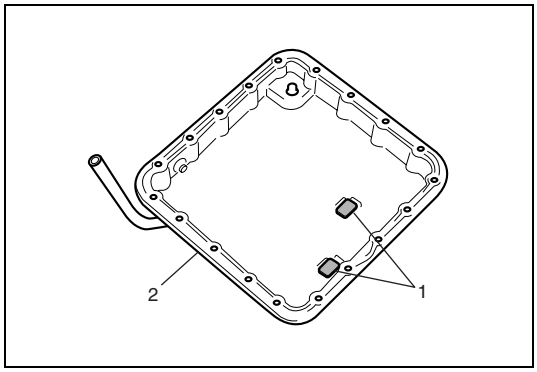

13) Remove magnets (1) from oil pan (2).

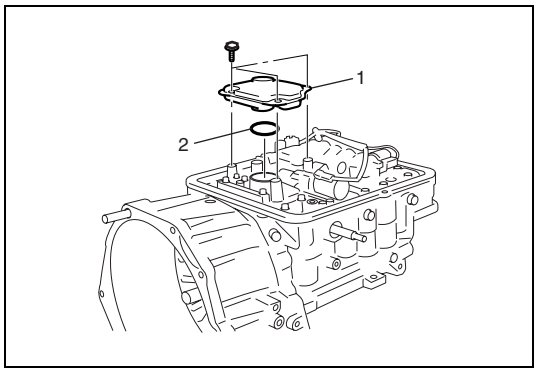

14) Remove oil strainer (1) and O-ring (2) from valve body.

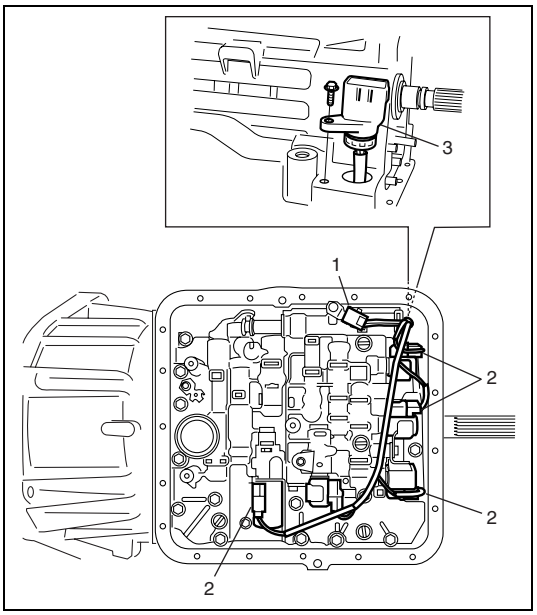

15) Remove transmission fluid temperature sensor (1) from clamp.
16) Disconnect solenoid connectors (2).
17) Remove valve body harness connector (3) from transmission case.

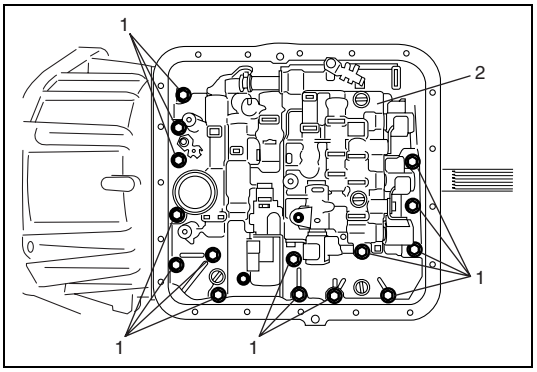

18) Remove 16 bolts (1), then remove valve body assembly (2).

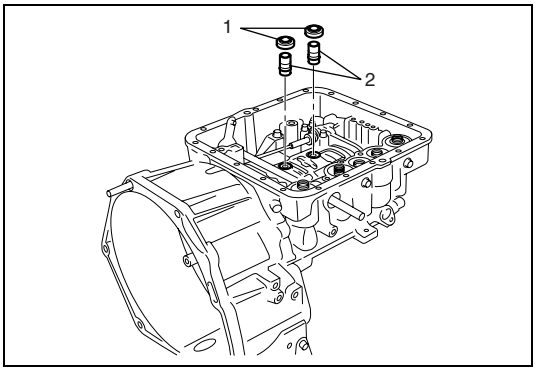

19) Remove O-ring (1) and brake drum gasket (2).

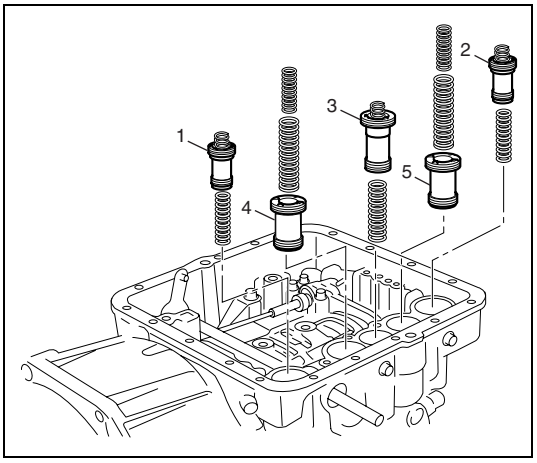

20) Remove accumulator pistons and accumulator springs of forward clutch (1), direct clutch (2), reverse clutch (3), O/D and 2nd coast brake (4) and 2nd brake (5).

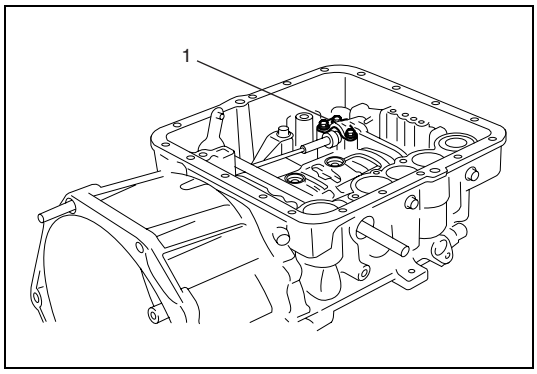

21) Remove parking lock pawl bracket (1).

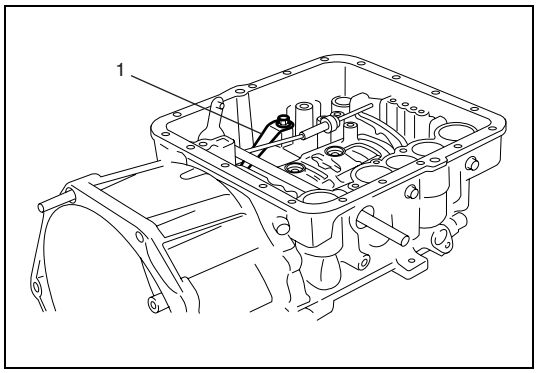

22) Remove manual shift lever spring (1).

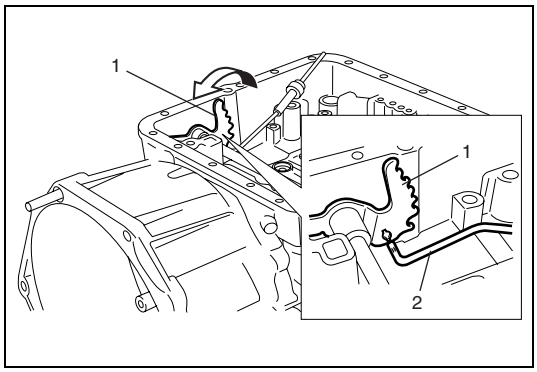

23) Turn manual shift lever (1) in arrow direction, and then remove parking lock rod (2).

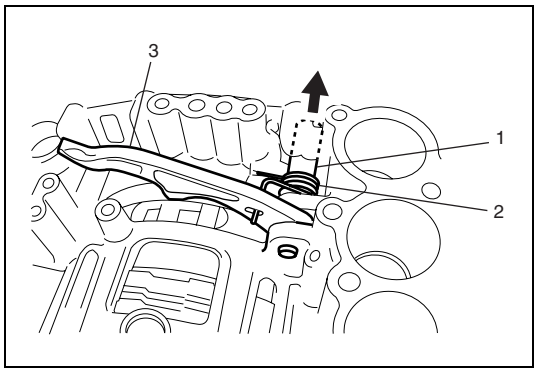

24) Pull out parking lock pawl shaft (1) in arrow direction, and then remove spring (2) and parking lock pawl (3).

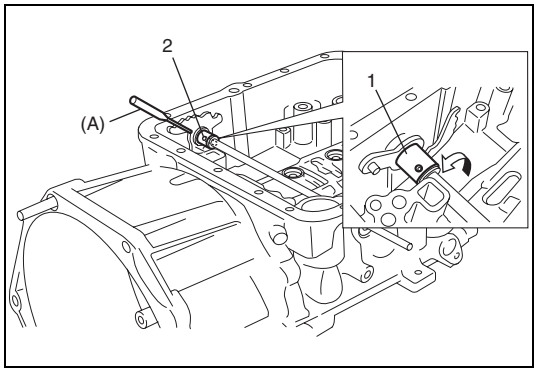

25) Uncaulk spacer (1), turn it in arrow direction, and then remove spring pin (2) using special tool.

Special tool
(A): 09922-89810

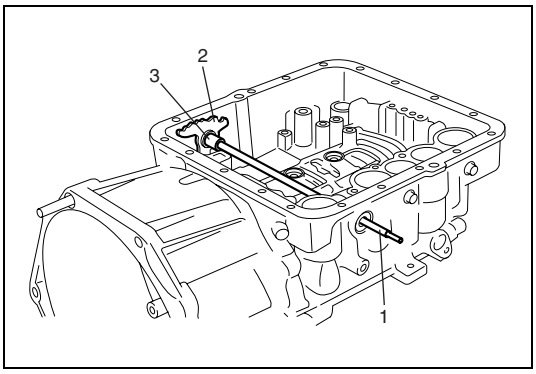

26) Pull out manual shift lever shaft (1), and then remove manual shift lever (2) and spacer (3).

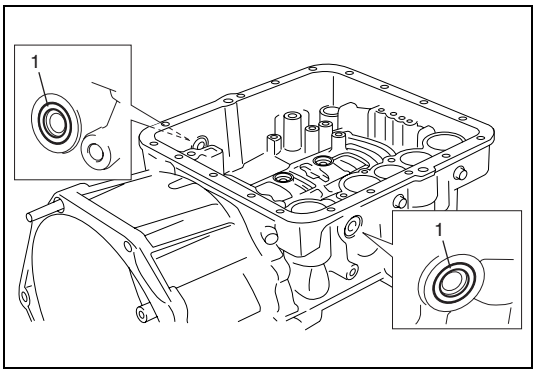

27) Remove 2 oil seals (1).

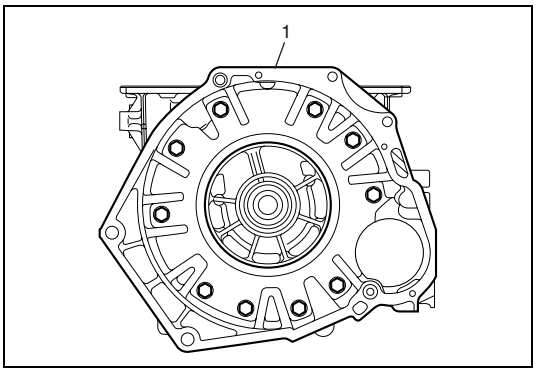

28) Remove torque converter housing (1).
29) Remove torque converter housing (1) while tapping around it lightly with plastic hammer.

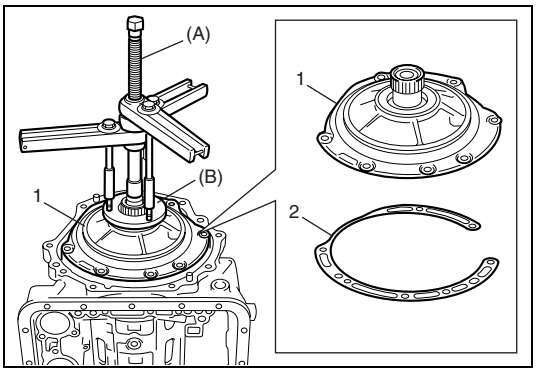

30) Using special tools, remove oil pump assembly (1) and gasket (2).

Special tool
(A): 09920-13120
(B): 09927-66520

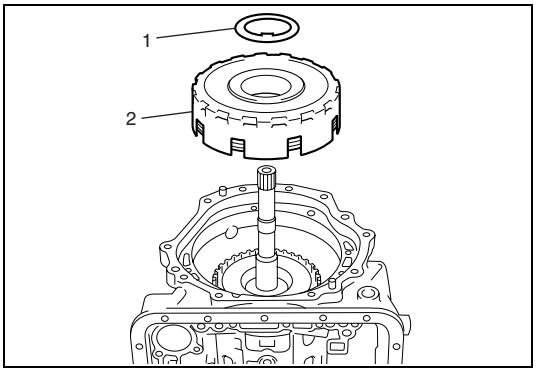

31) Remove thrust washer (1) and reverse clutch assembly (2).

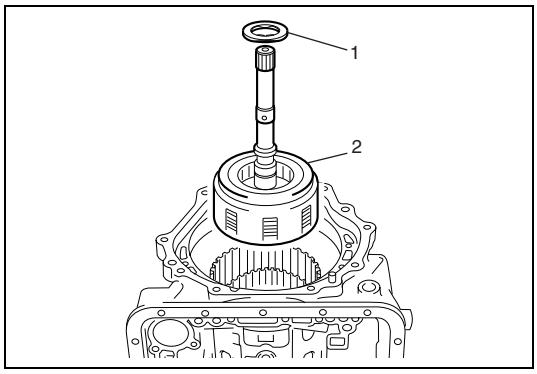

32) Remove bearing (1) and forward clutch & input shaft assembly (2).

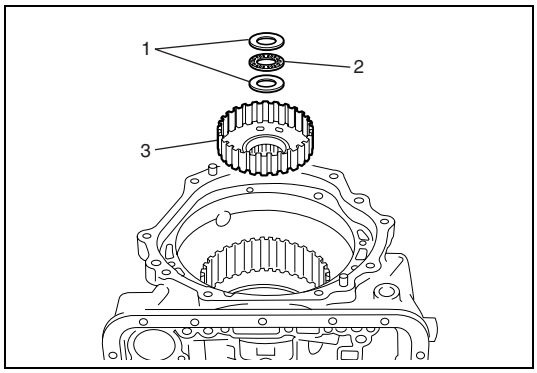

33) Remove 2 bearing races (1), bearing (2) and forward clutch hub (3).

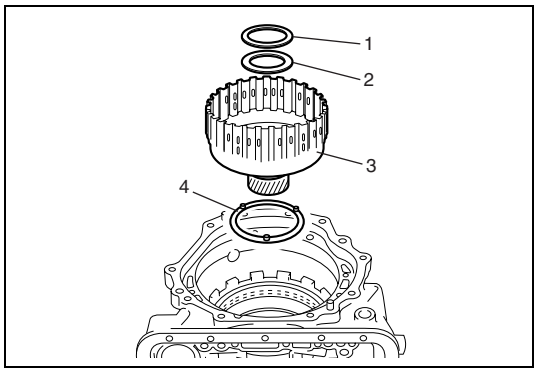

34) Remove bearing (1), bearing race (2), front sun gear (3) and thrust washer (4).

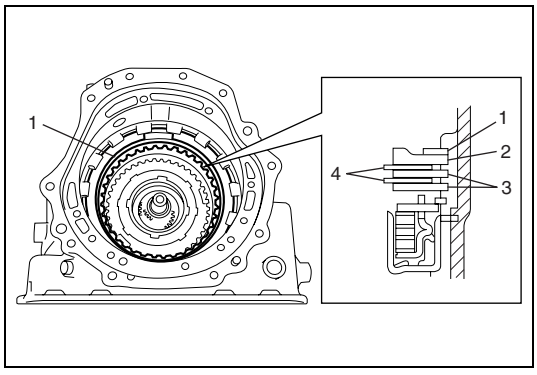

35) After removing snap ring (1), remove O/D and 2nd coast brake separator plate (2), friction plates (3) and friction discs (4).

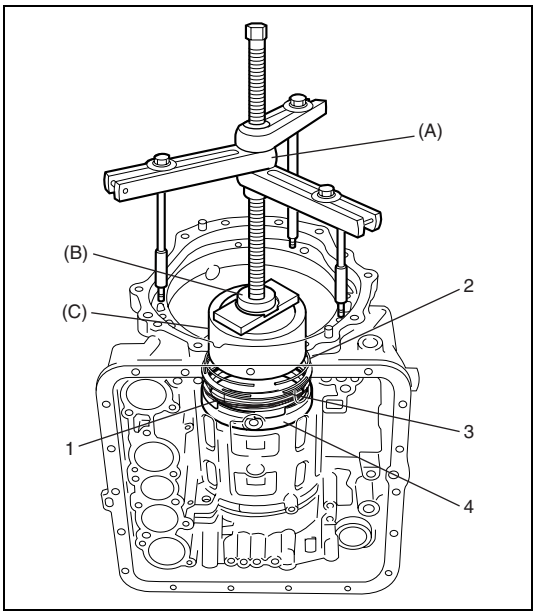

36) Using special tools, compress O/D and 2nd coast brake piston return spring (1) and remove snap ring (2).

Special tool
(A): 09920-13120
(B): 09925-86010
(C): 09927-66510

37) Remove O/D and 2nd coast brake piston return spring seat (3), O/D and 2nd coast brake piston return spring (4) and O/D and 2nd coast brake piston assembly (5).

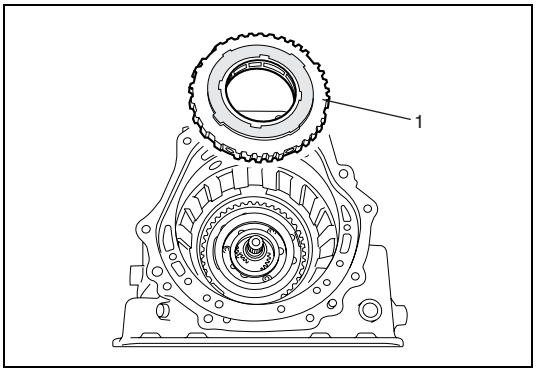

38) Remove one-way clutch No.1 (1).

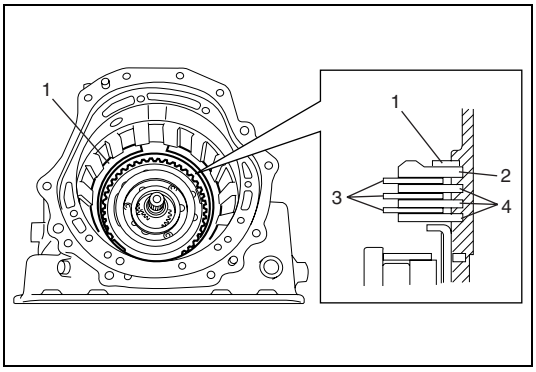

39) After removing snap ring (1), remove 2nd brake separator plate (2), friction discs (3) and friction plates (4).

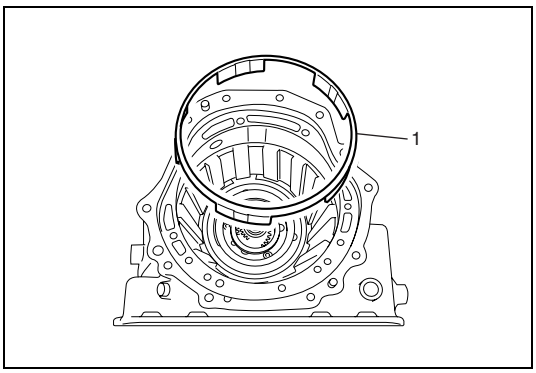

40) Remove 2nd brake apply tube (1).

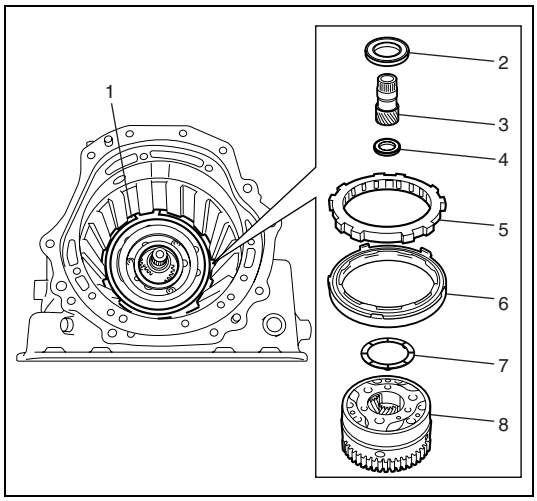

41) After removing snap ring (1), remove bearing, (2) rear sun gear (3), bearing race (4), one-way clutch No.2 (5), 2nd brake piston assembly (6), thrust washer (7) and planetary gear assembly (8).

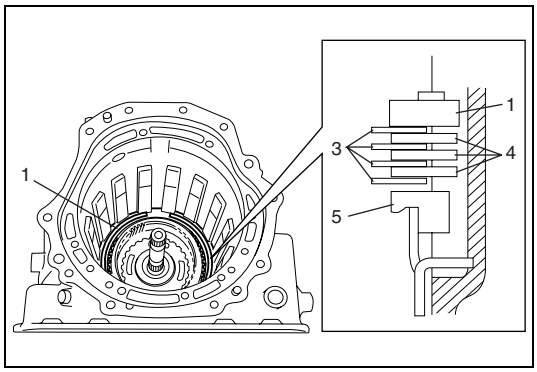

42) After removing snap ring (1), remove 1st & reverse brake separator plate (2), friction discs (3), friction plates (4) and retaining plate (5).

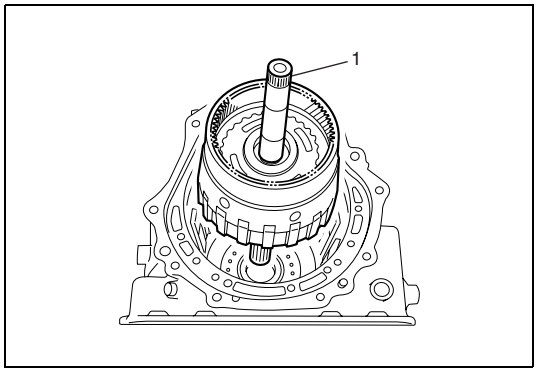

43) Remove direct clutch & output shaft assembly (1).

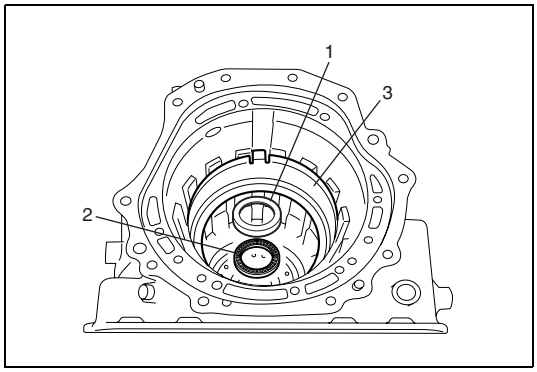

44) Remove bearing race (1), bearing (2) and 1st & reverse brake apply tube (3).

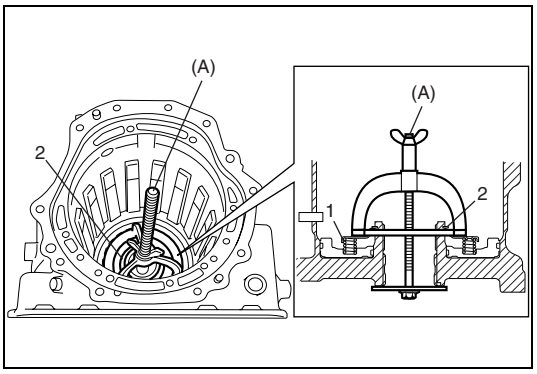

45) Using special tool, compress 1st & reverse brake piston return spring (1), and then remove snap ring (2).

Special tool
(A): 09922-86010

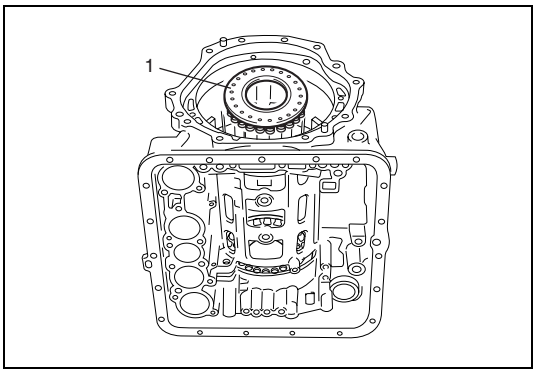

46) Remove 1st & reverse brake piston return spring (1).

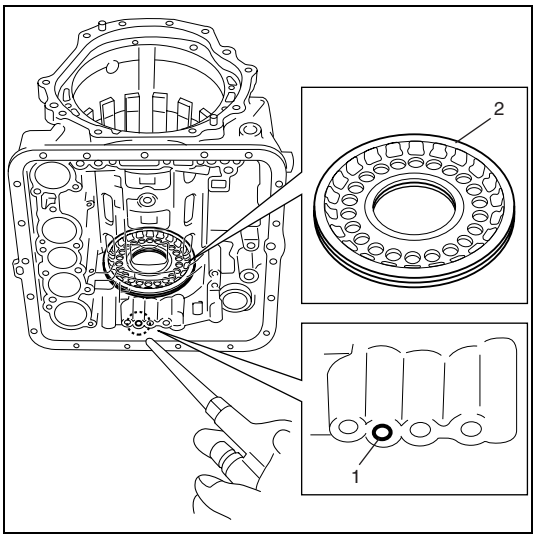

47) Blow air into oil hole (1) as shown in figure, remove 1st & reverse brake piston (2).

Automatic Transmission Unit Reassembly

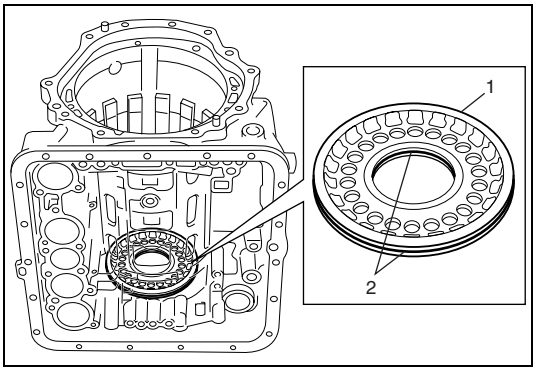

1) After applying A/T fluid to new O-rings, install them to 1st & reverse brake piston (1).
2) Install 1st & reverse brake piston (1) to transmission case.

NOTE:
Be careful not to damage O-ring when installing 1st & reverse brake piston.

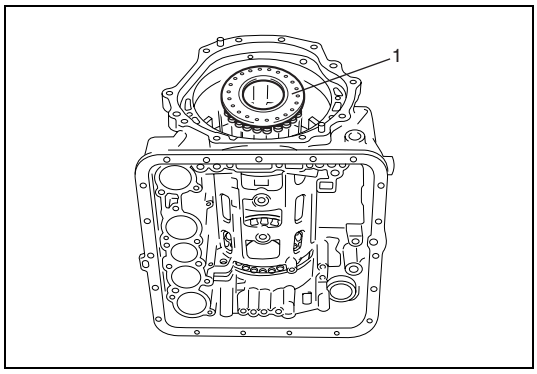

3) Install 1st & reverse brake piston return spring (1).

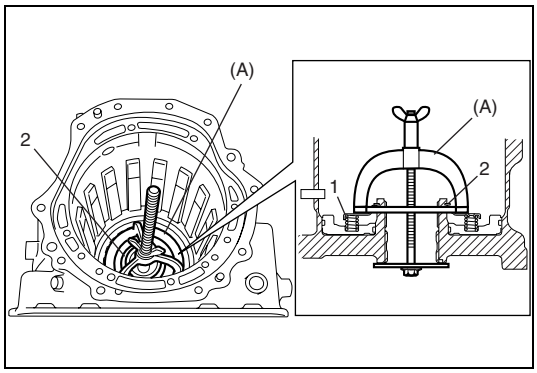

4) Using special tool, compress 1st & reverse brake piston return spring (1), and then install new snap ring (2).

Special tool
(A): 09922-86010

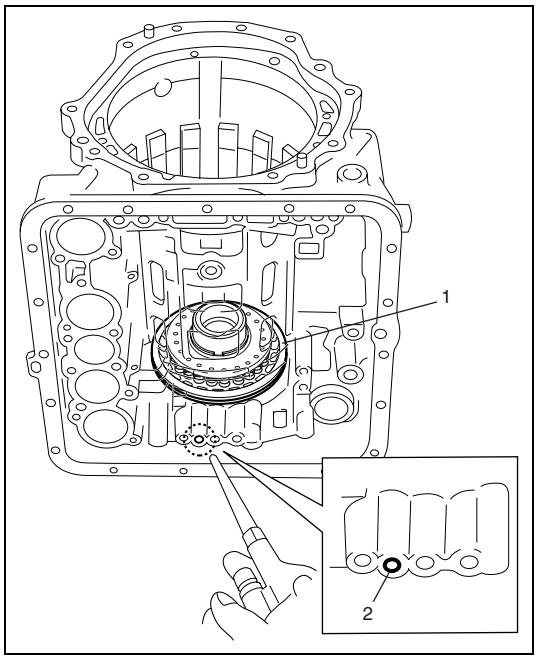

5) Make sure that 1st & reverse brake piston (1) move smoothly when blowing and not blowing low pressure compressed air into oil hole (2) of transmission case.

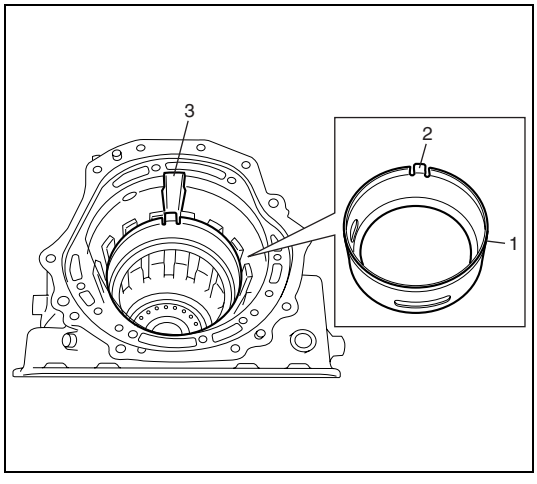

6) Install 1st & reverse brake apply tube (1).

NOTE:

Make sure that tab (2) of 1st & reverse brake apply tube fits into notch (3) of transmission case.

7) Check pack clearance of 1st & reverse brake referring to “1st & Reverse Brake Inspection” in this section.

NOTE:

Perform pack clearance check before installing direct clutch & output shaft assembly.

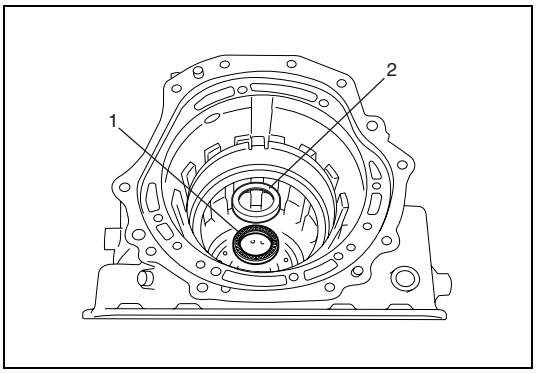

8) Install bearing (1) and bearing race (2).

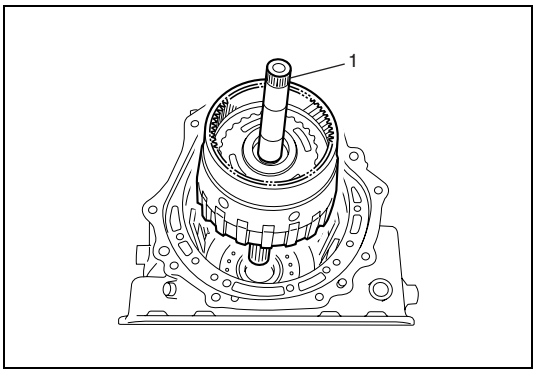

9) Install direct clutch & output shaft assembly (1).

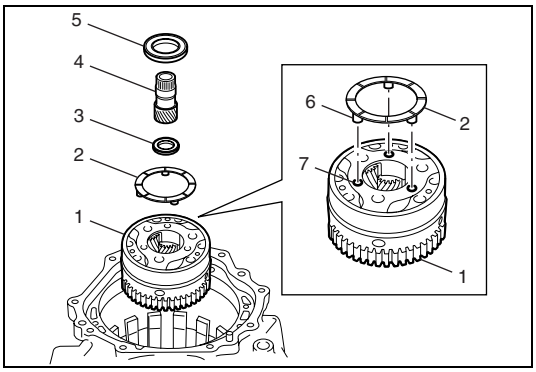

10) Install planetary gear assembly (1), thrust washer (2), bearing race (3), rear sun gear (4) and bearing (5).

NOTE:

Align projection (6) of thrust washer with hole (7) in planetary gear assembly.

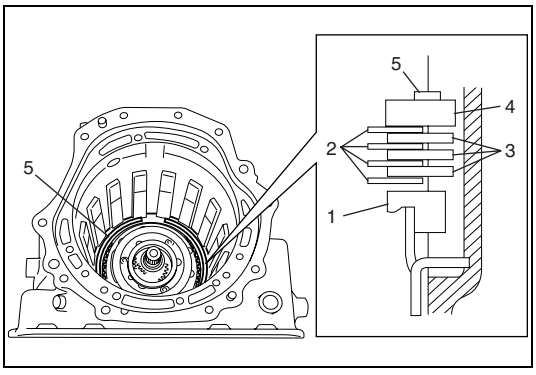

11) Install 1st & reverse brake disc set (retaining plate (1), 4 friction discs (2), 3 friction plates (3) and separator plate (4)), then install snap ring (5).

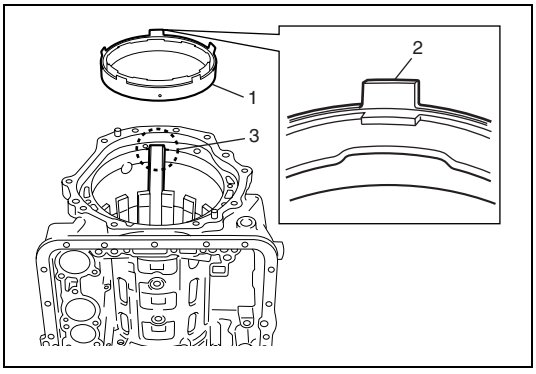

12) Install 2nd brake piston assembly (1).

NOTE:

Align projection (2) of 2nd brake piston assembly (1) and recess (3) of transmission case.

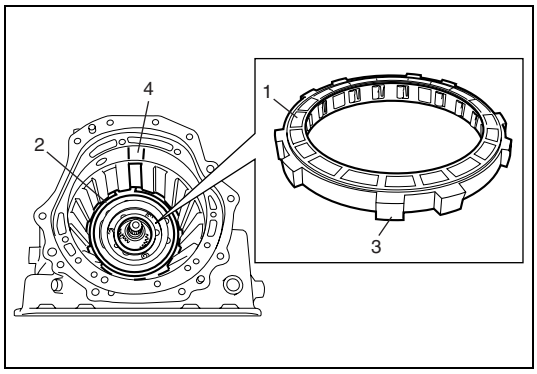

13) Install one-way clutch No.2 (1), then install snap ring (2).

NOTE:

Do not align projection (3) of one-way clutch No.2 and recess (4) of transmission case.

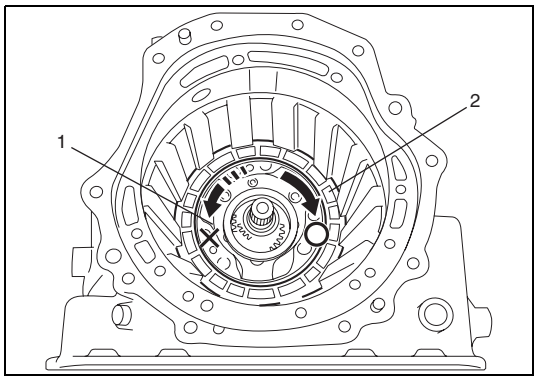

14) Turn planetary gear assembly (1) to check that planetary gear assembly moves smoothly when turned clockwise and planetary gear assembly locks when turned counterclockwise.

NOTE:

When planetary gear assembly (1) turns counterclockwise, check if one-way clutch No. 2 (2) is installed properly.

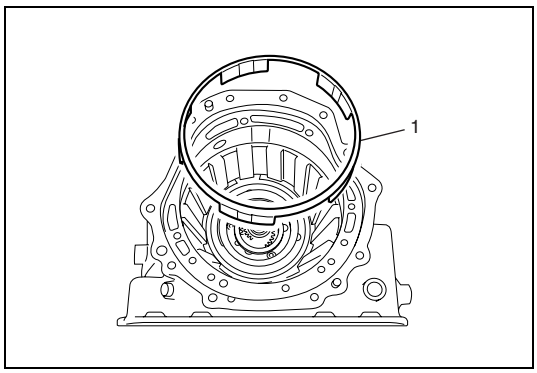

15) Install 2nd brake apply tube (1).

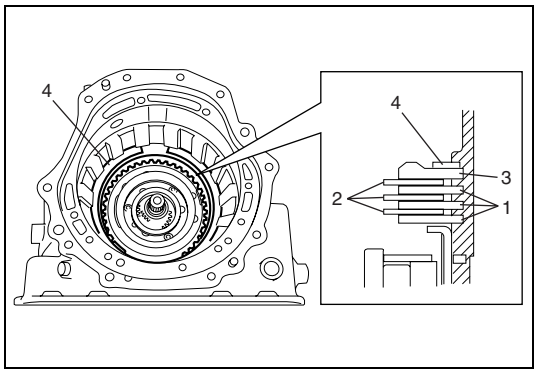

16) Install 2nd brake disc set (3 friction plates (1), 3 friction discs (2) and separator plate (3)), then install snap ring (4).
17) Check pack clearance of 2nd brake referring to “2nd Brake Inspection” in this section.

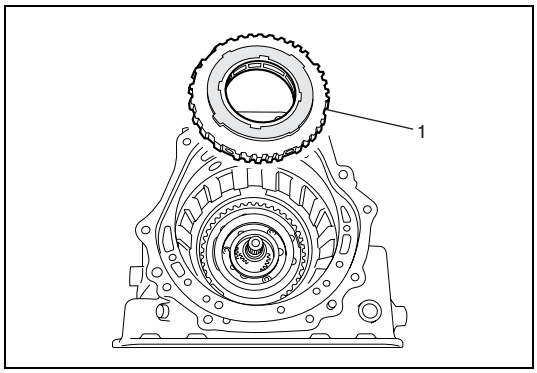

18) Install one-way clutch No.1 (1).

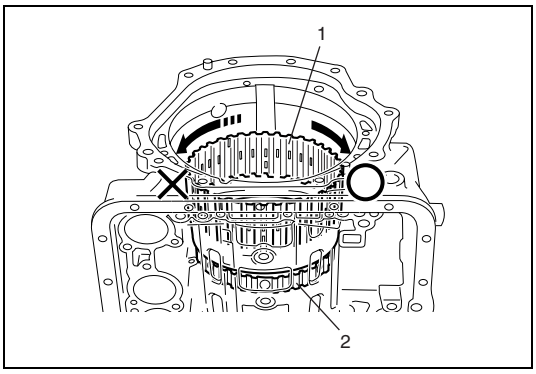

19) Install front sun gear (1) to one-way clutch No.1 (2) and check that front sun gear (1) moves smoothly when turned clockwise and front sun gear locks when turned counterclockwise.

NOTE:

When front sun gear turns counterclockwise, check if one-way clutch No. 1 (2) is installed properly.

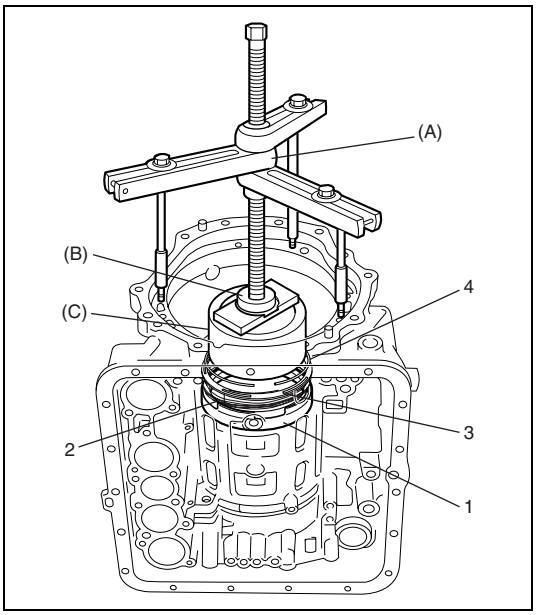

20) Remove front sun gear.
21) Install O/D and 2nd coast brake piston assembly (1), O/D and 2nd coast brake piston return spring (2) and O/D and 2nd coast brake piston return spring seat (3).
22) Using special tools, compress O/D and 2nd coast brake piston return spring (2) and install snap ring (4).

Special tool
(A): 09920-13120
(B): 09925-86010
(C): 09927-66510

23) Check pack clearance of O/D and 2nd coast brake referring to “O/D and 2nd coast brake Inspection” in this section.

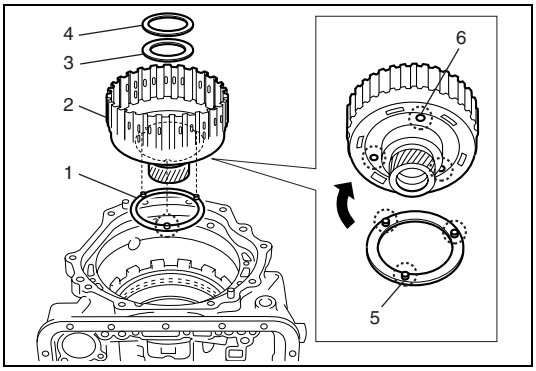

24) Install thrust washer (1), front sun gear (2), bearing race (3) and bearing (4).

NOTE:

Align projection (5) of thrust washer and holes (6) in front sun gear.

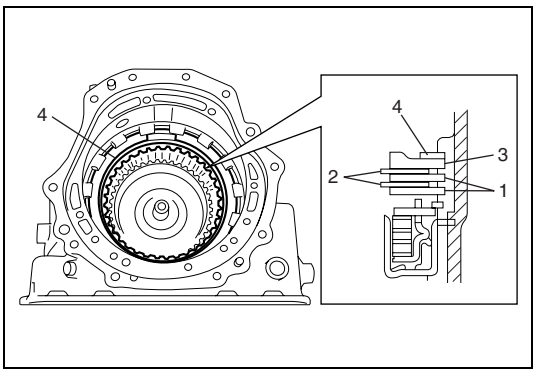

25) Install O/D and 2nd coast brake disc set (2 friction plates (1), 2 friction discs (2) and separator plate (3)), then install snap ring (4).

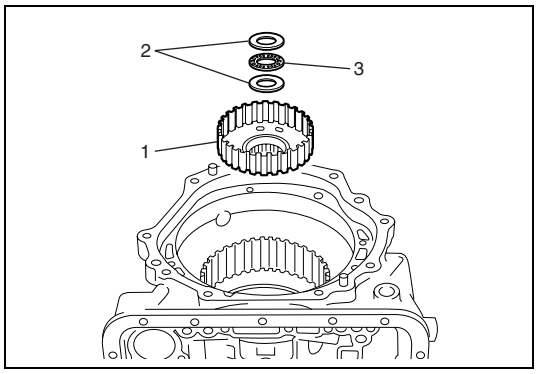

26) Install forward clutch hub (1), 2 bearing races (2) and bearing (3).

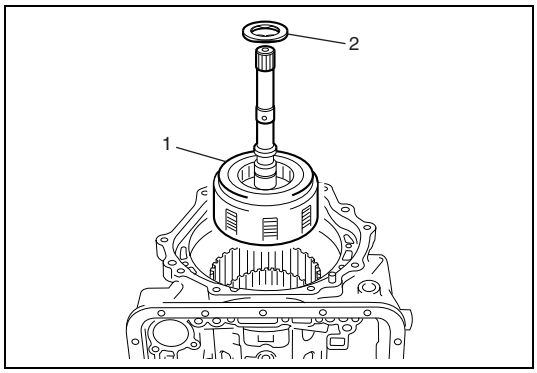

27) Install forward clutch & input shaft assembly (1) and bearing (2).

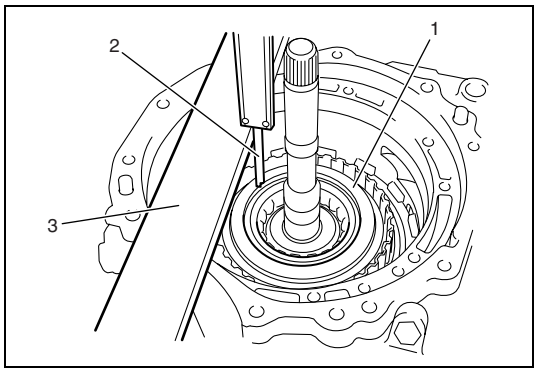

28) Check for correct installation of forward clutch & input shaft assembly (1) as follows.
Measure distance “a” by using micrometer caliper (2) and straightedge (3). If out of specification, remove forward clutch & input shaft assembly, forward clutch hub and reinstall them properly.

Distance between forward clutch & input shaft assembly and mating surface of transmission case
“a”: 45.83 – 46.79 mm (1.804 – 1.842 in.)

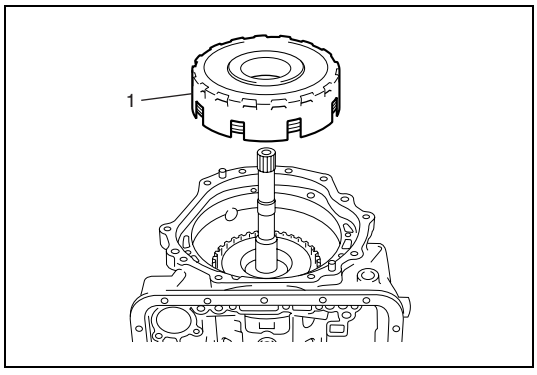

29) Install reverse clutch assembly (1).

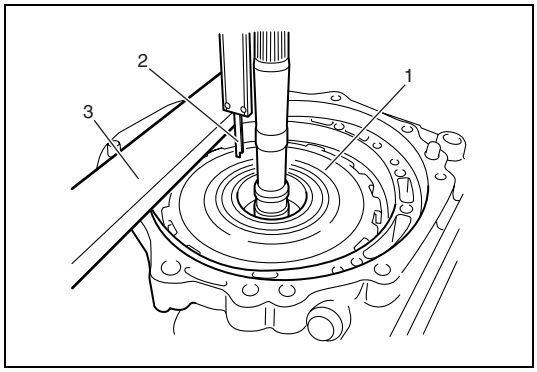

30) Check for correct installation of reverse clutch assembly (1) as follows.
Measure distance “a” by using micrometer caliper (2) and straightedge (3). If out of specification, remove reverse clutch assembly, reverse and reinstall it properly.

Distance between reverse clutch assembly and mating surface of transmission case
“a”: 25.21 – 26.27 mm (0.993 – 1.034 in.)

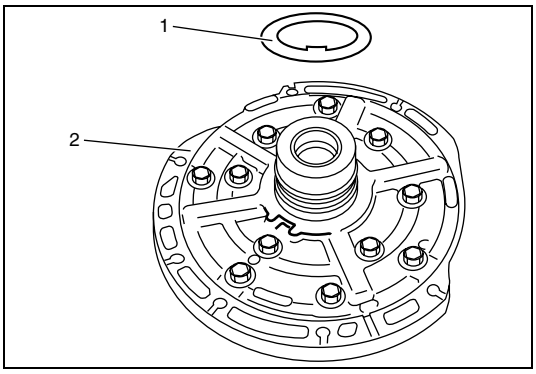

31) Fit thrust washer (1) to oil pump assembly (2) with petroleum jelly so that washer does not fall off when assembling A/T unit.

NOTE:

Align projection of thrust washer and recess of oil pump assembly.

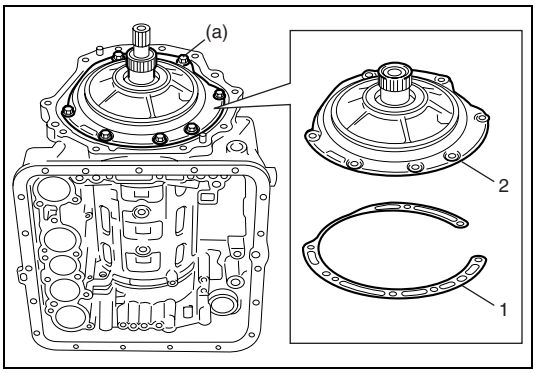

32) Install new gasket (1) and oil pump assembly (2), then tighten 7 bolts to specified torque.

Tightening torque
Oil pump bolt (a): 12 N·m (1.2 kg-m, 9.0 lb-ft)

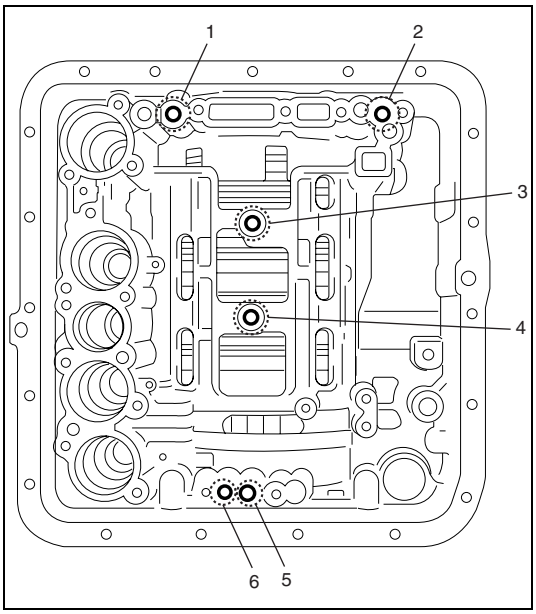

33) Blow air into forward clutch (1), reverse clutch (2), O/D and 2nd coast brake (3), 2nd brake (4), direct clutch (5) and 1st & reverse brake (6) oil passage shown in figure blow and check each piston for operation sound.

NOTE:

When no operation sound is heard, disassemble and check each component for proper installation.

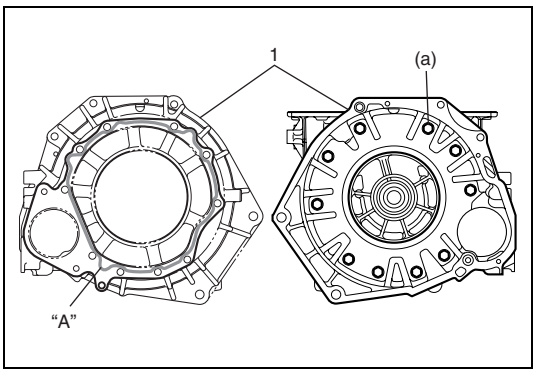

34) Apply sealant to torque converter housing (1) over transmission case installation surface, install converter housing (1) in transmission case and tighten 10 bolts to specified torque.

Tightening torque
Torque converter housing bolt
(a): 25 N·m (2.5 kg-m, 18.0 lb-ft)

"A": Sealant 99000-31230

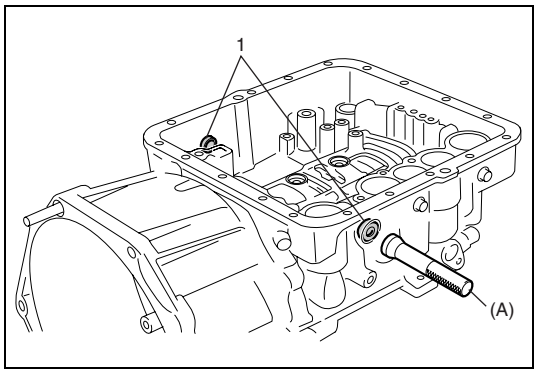

35) Using special tool, install 2 oil seals (1).

NOTE:

Use new oil seals and apply grease to their lip.

Special tool
(A): 09925-98210

: Grease 99000-25010

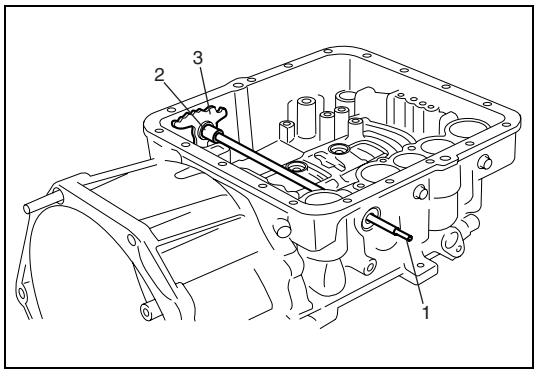

36) Install manual shift lever shaft (1), new spacer (2) and manual shift lever (3).

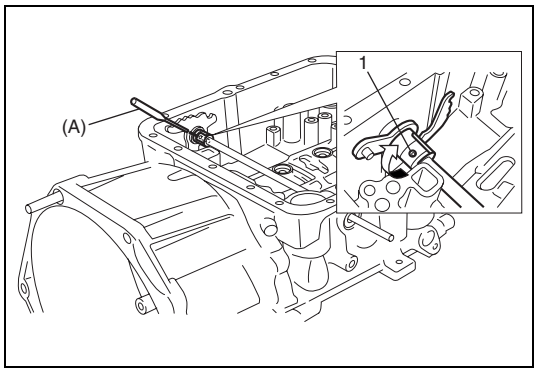

37) Using special tool, drive in new spring pin (1).

Special tool
(A): 09922-89810

38) Turn spacer in arrow direction to caulk it.

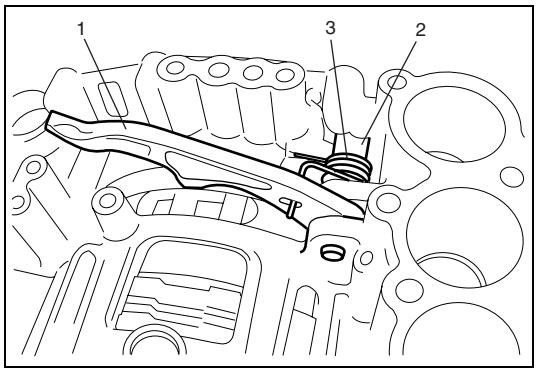

39) Install parking lock pawl (1), parking lock pawl shaft (2) and spring (3).

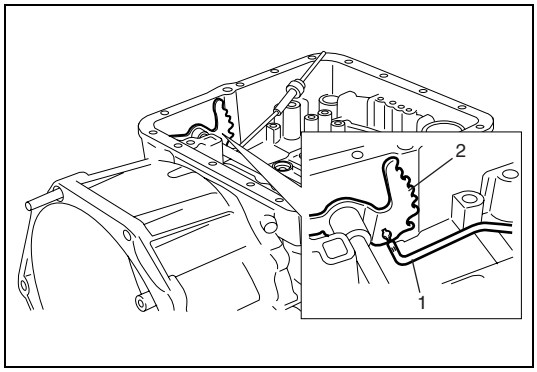

40) Install parking lock rod (1) to manual shift lever (2).

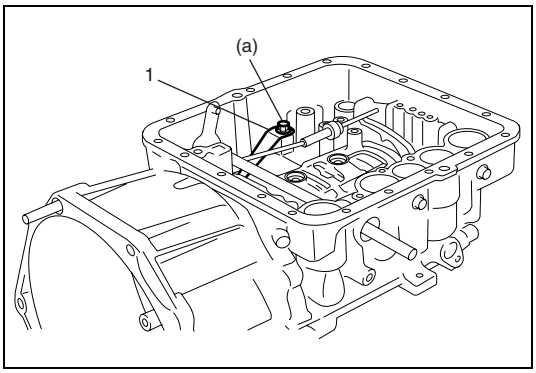

41) Install manual shift lever spring (1) and tighten bolt to specified torque.

Tightening torque
Manual shift lever spring bolt
(a): 15 N·m (1.5 kg-m, 11.0 lb-ft)

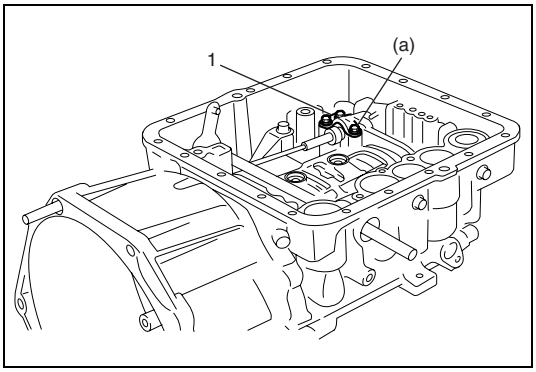

42) Install parking lock pawl bracket (1) and tighten 3 bolts to specified torque.

Tightening torque
Parking lock pawl bracket bolt
(a): 8 N·m (0.8 kg-m, 6.0 lb-ft)

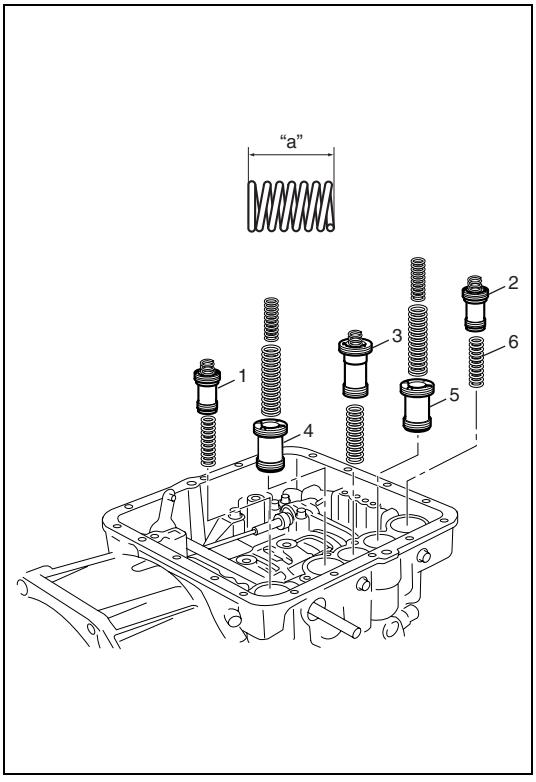

43) Install accumulator pistons and accumulator springs (6) of forward clutch (1), direct clutch (2), reverse clutch (3), O/D and 2nd coast brake (4) and 2nd brake (5) to automatic transmission case.

NOTE:

Use new O-ring for each accumulator piston and apply A/T fluid to it.

Accumulator spring identification

Accumulator piston	Accumulator spring	
	Free length "a"	Color
Forward clutch	51.9 mm (2.0433 in.)	Blue
Direct clutch	67.4 mm (2.6535 in.)	Yellow
Reverse clutch	61.4 mm (2.4173 in.)	Purple
O/D and 2nd coast brake	45.4 mm (1.7874 in.)	Light Blue
	57.7 mm (2.2716 in.)	Light Blue
2nd brake	47.8 mm (1.8819 in.)	Yellow
	66.9 mm (2.6339 in.)	Light Green

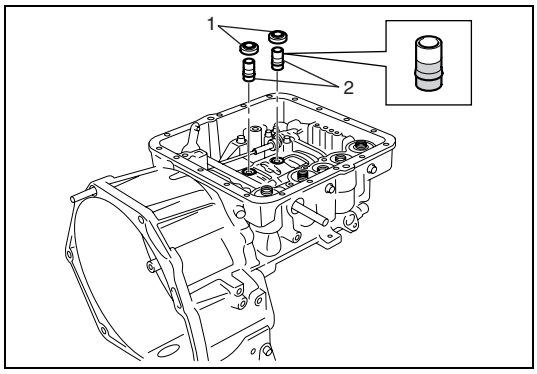

44) After applying A/T fluid to new O-rings (1) and brake drum gaskets (2), install them to automatic transmission case.

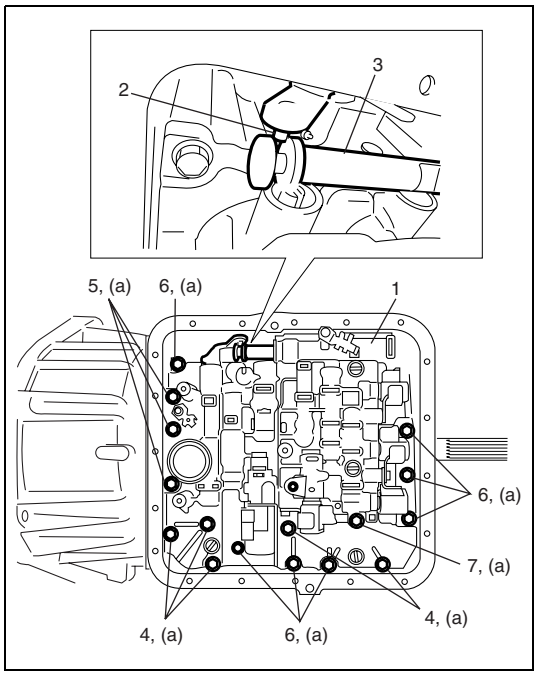

45) Install valve body assembly (1) to automatic transmission case and tighten bolts to specified torque.

NOTE:

Be sure to fit manual shift lever pin (2) into groove in manual shift valve (3).

Tightening torque
Valve body bolt (a): 11 N·m (1.1 kg-m, 8.0 lb-ft)

Valve body bolt length

Bolt	Length "a"	Pieces
A (4)	28 mm (1.1024 in.)	5
B (5)	36 mm (1.4173 in.)	3
C (6)	20 mm (0.7874 in.)	7
D (7)	32 mm (1.2598 in.)	1

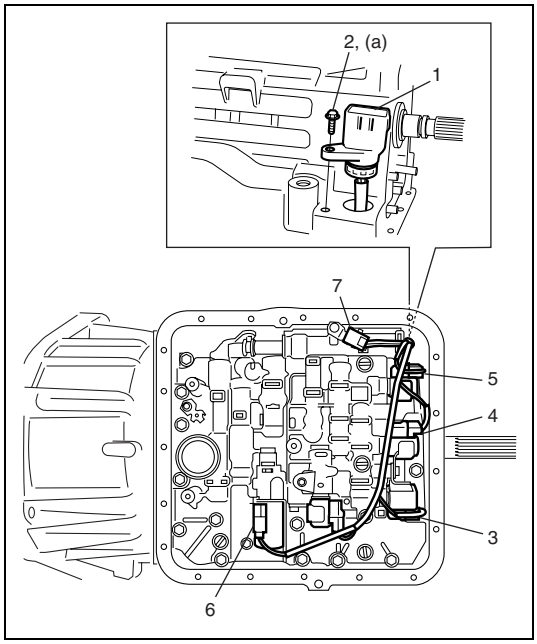

46) Install valve body harness connector (1) and tighten valve body harness connector fixing bolt (2) to specified torque.

Tightening torque
Valve body harness connector fixing bolt
(a): 5.5 N·m (0.55 kg-m, 4.0 lb-ft)

47) Check wire color or each connector and connect solenoid harness properly.
48) Install A/T fluid temperature sensor (7).

Solenoid valve coupler specification

Solenoid valve coupler	Wire color
Shift solenoid No.1 (3)	White
Shift solenoid No.2 (4)	Black
Timing solenoid valve (5)	Yellow
Pressure control solenoid valve (6)	Gray + Green

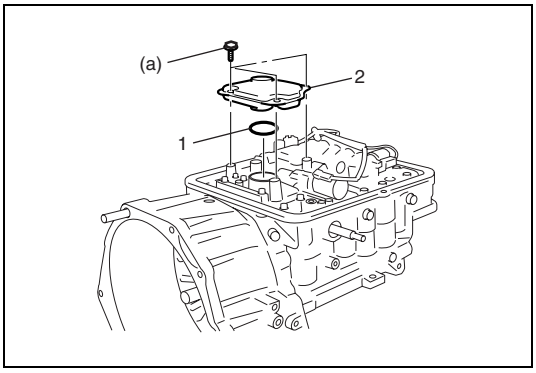

49) After applying A/T fluid to new O-ring (1), install O-ring (1) and oil strainer (2), then tighten 3 bolts to specified torque.

Tightening torque
Oil strainer bolt (a): 10 N·m (1.0 kg-m, 7.5 lb-ft)

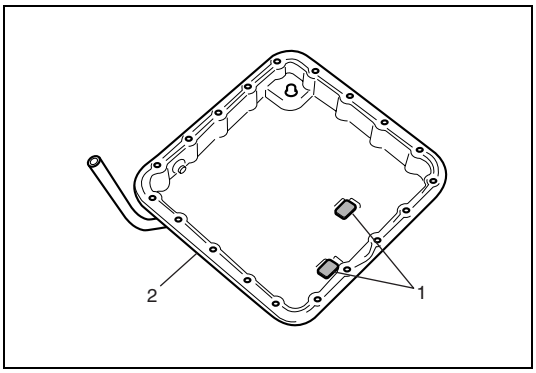

50) Install magnets (1) to oil pan (2).

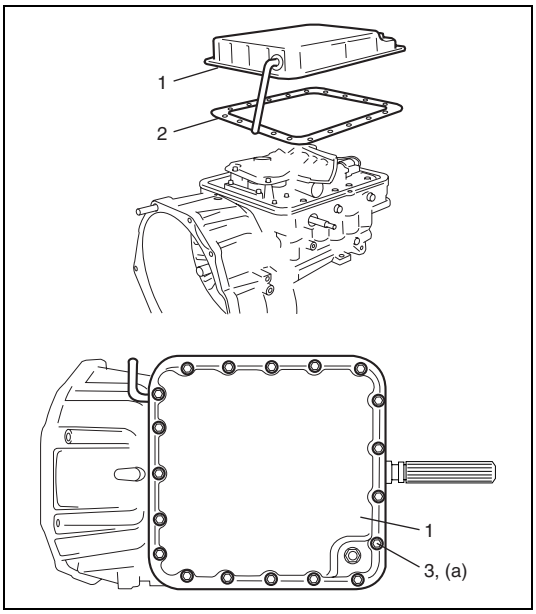

51) Install oil pan (1) and new gasket (2), then tighten oil pan fixing bolts (3) to specified torque diagonally and little by little.

Tightening torque
Oil pan fixing bolt (a): 7.0 N·m (0.7 kg-m, 5.0 lb-ft)

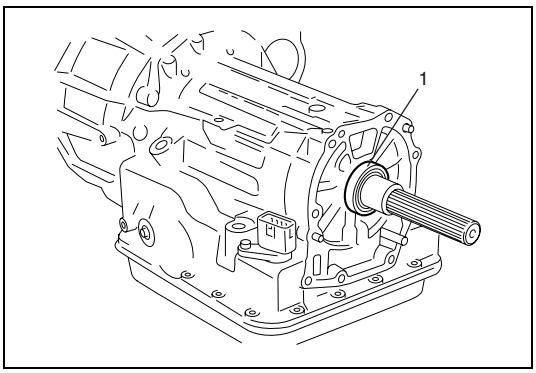

52) Install output shaft bearing (1).

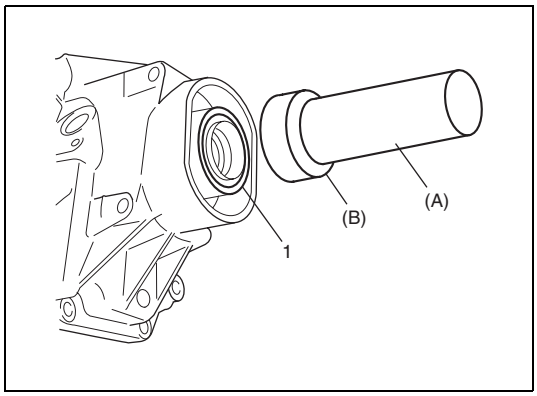

53) Using special tool, install new oil seal (1) to rear extension case.

NOTE:

Use new oil seal and apply grease to it.

Special tool
(A): 09913-84510
(B): 09926-26020

: Grease 99000-25010

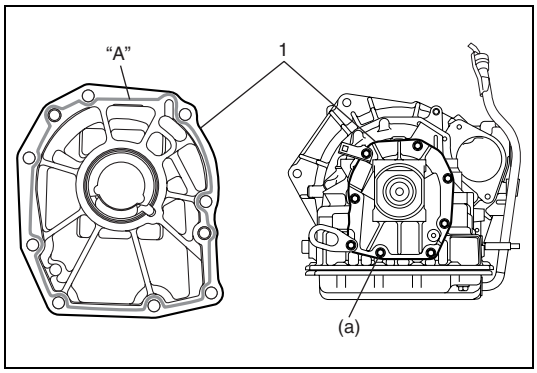

54) Apply sealant to rear extension case (1) over transmission installation surface, install it to transmission case and tighten 8 bolts to specified torque.

Tightening torque
Rear extension case bolt (a): 25 N·m (2.5 kg-m, 18.0 lb-ft)

"A": Sealant 99000-31230

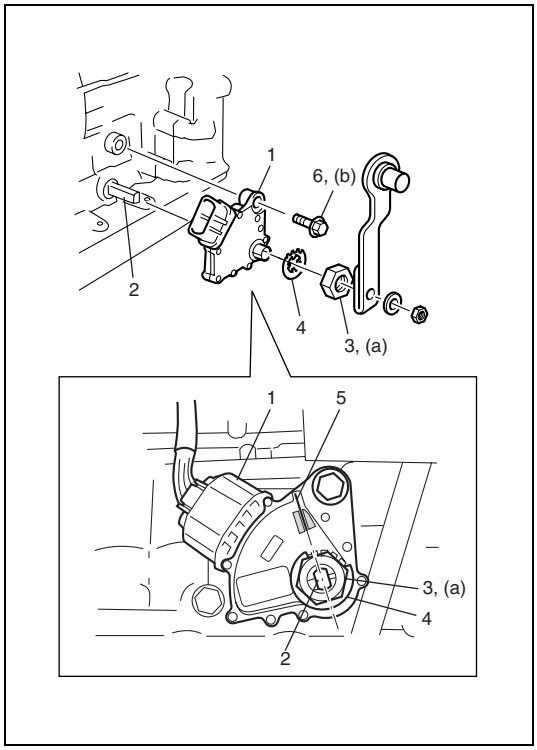

55) Install transmission range sensor (1) to manual shift lever shaft (2).
56) Turn manual shift lever shaft (2) counterclockwise fully, return it by 2 notches to set it to "N" range.
57) Tighten lock nut (3) to specified torque and fix it by bending its claws of new lock washer (4).

Tightening torque
Lock nut (a): 7.0 N·m (0.7 kg-m, 5.0 lb-ft)

58) With "N" range reference line (5) and center line of manual shift lever shaft (2) aligned, tighten transmission range sensor fixing bolt (6) to specified torque.

NOTE:

Use new transmission range sensor bolt as it is precoat bolt.

Tightening torque
Transmission range sensor bolt
(b): 13 N·m (1.3 kg-m, 9.5 lb-ft)

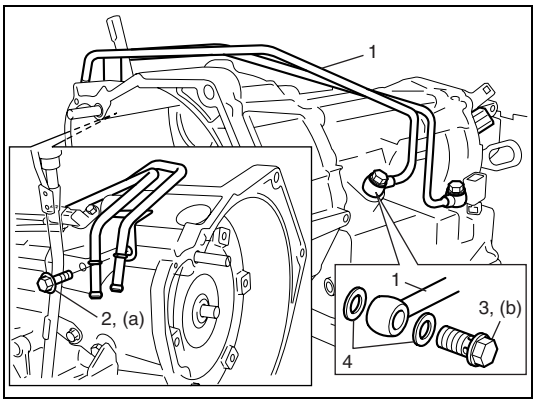

59) Install fluid cooler pipe (1), then tighten oil cooler pipe bolt (2) and union bolt (3) to specified torque.

NOTE:

Use new washer (4) for oil cooler pipe.

Tightening torque
Fluid cooler pipe bolt (a): 6.0 N·m (0.6 kg-m, 4.5 lb-ft)
Union bolt (b): 28.0 N·m (2.8 kg-m, 20.5 lb-ft)

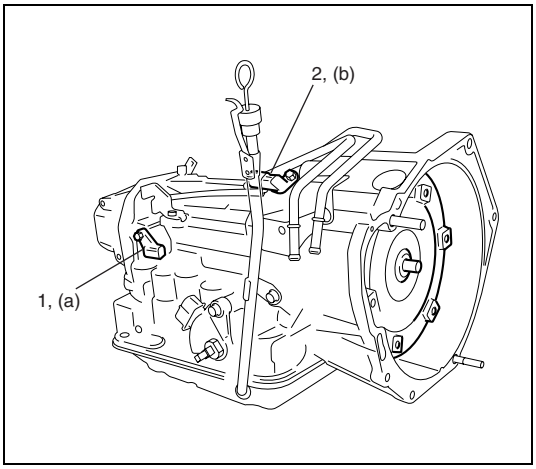

60) Install output shaft speed sensor (1) and input shaft speed sensor (2), then tighten bolts to specified torque.

Tightening torque
Output shaft speed sensor bolt
(a): 5.5 N·m (0.55 kg-m, 4.0 lb-ft)
Input shaft speed sensor bolt
(b): 5.5 N·m (0.55 kg-m, 4.0 lb-ft)

NOTE:

Use new O-rings for output shaft speed sensor and input shaft speed sensor and apply A/T fluid to them.

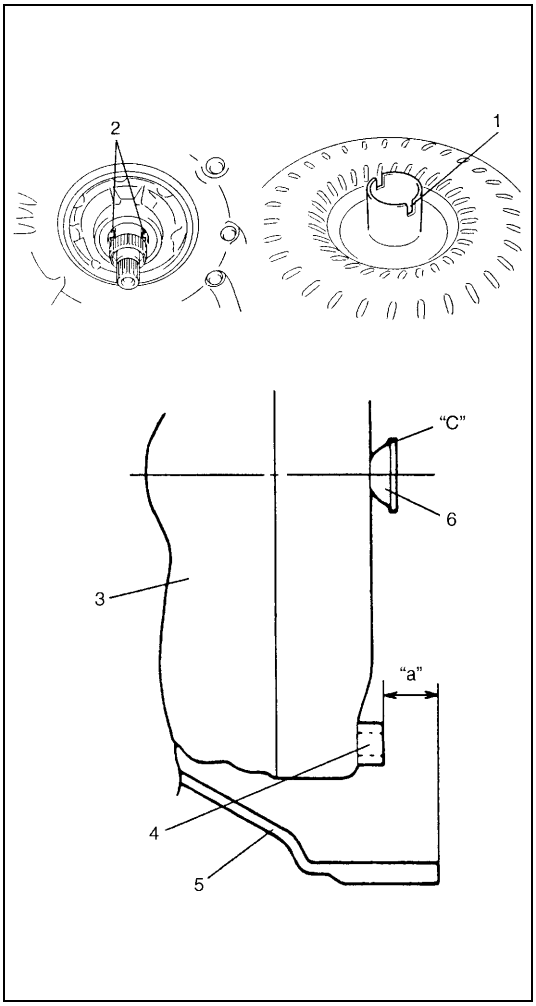

61) Install torque converter noting the following points.

CAUTION:
- **Before installing converter, make sure that its pump hub portion is free from nicks, burrs or damage which may cause oil seal to leak.**
- **Be very careful not to drop converter on oil pump gear. Damage in gear, should it occur, may cause a critical trouble.**

- Install torque converter aligning grooves (1) of torque converter and projection (2) of oil pump drive gear.
- Install torque converter, using care not to damage oil seal of oil pump.
- After installing torque converter, check that distance "a" is within specification.

Torque converter installing position
"a": 28.80 – 30.18 mm (1.134 – 1.188 in.)

- Check torque converter for smooth rotation.
- Apply grease around cup at the center of torque converter.

"C": Grease 99000-25010

3. Torque converter
4. Flange nut
5. Torque converter housing
6. Cup

Oil Pump Components

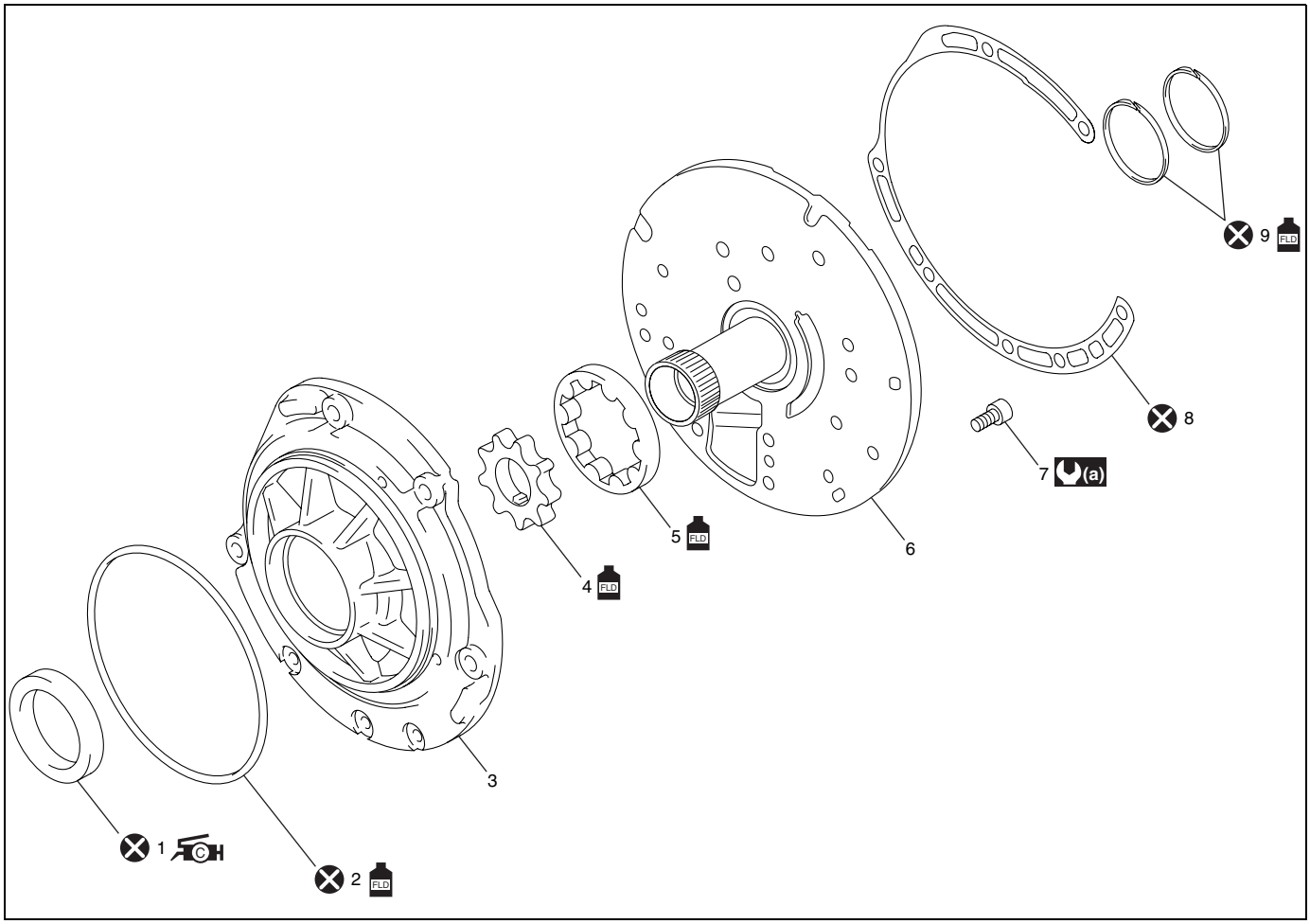

1. Oil seal : Apply grease 99000-25030 to oil seal lip.	5. Oil pump driven gear	9. Seal ring
2. O-ring	6. Stator shaft	10 N·m (1.0 kg-m, 7.5 lb-ft)
3. Oil pump body	7. Oil pump subassembly bolts	Apply automatic transmission fluid.
4. Oil pump drive gear	8. Gasket	Do not reuse.

Oil Pump Assembly Disassembly and Reassembly

Disassembly

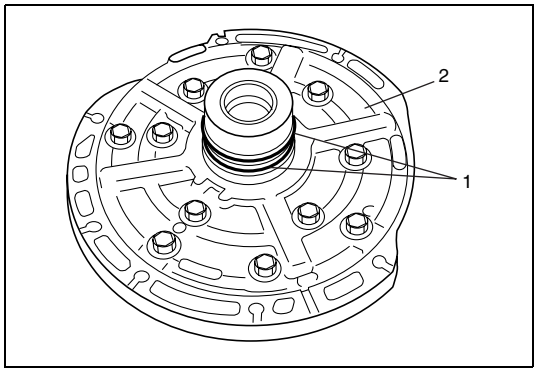

1) Remove 2 seal rings (1) from stator shaft (2).

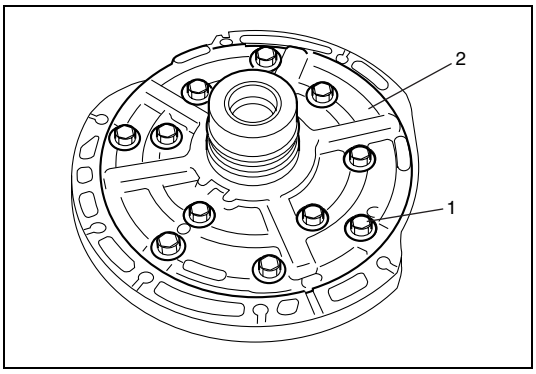

2) Remove 11 oil pump subassembly bolts (1), then remove stator shaft (2) from oil pump body.

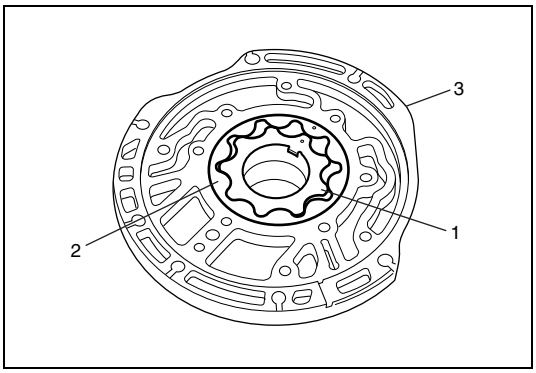

3) Remove drive gear (1) and driven gear (2) from oil pump body (3).

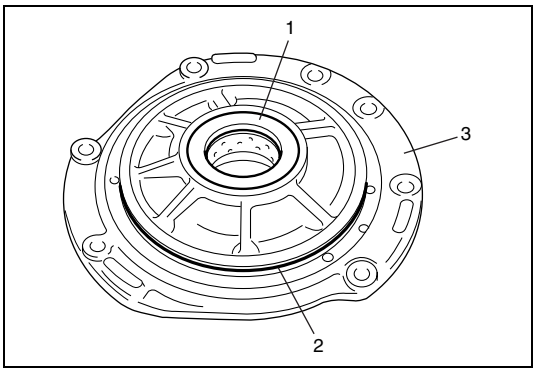

4) Remove oil seal (1) and O-ring (2) from oil pump body (3).

Reassembly

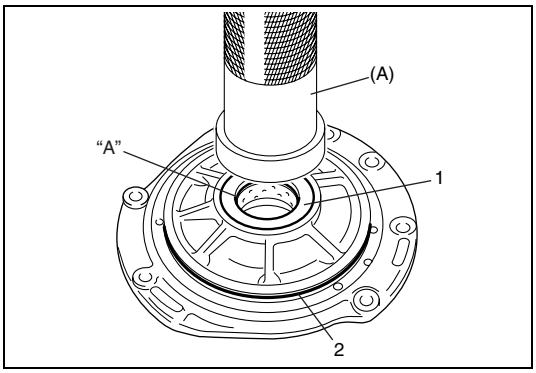

1) After applying A/T fluid to new oil seal (1) and new O-ring (2), install them to oil pump body.
Use special tool and hammer to install oil seal (1), then apply grease to its lip.

Special tool
(A): 09913-85210

"A": Grease 99000-25030

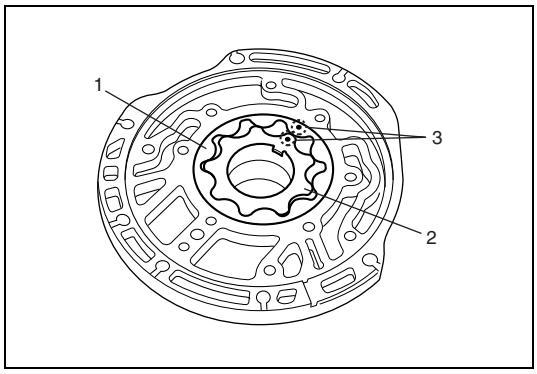

2) Install driven gear (1) and drive gear (2) in such direction that their punch marks (3) can be seen.

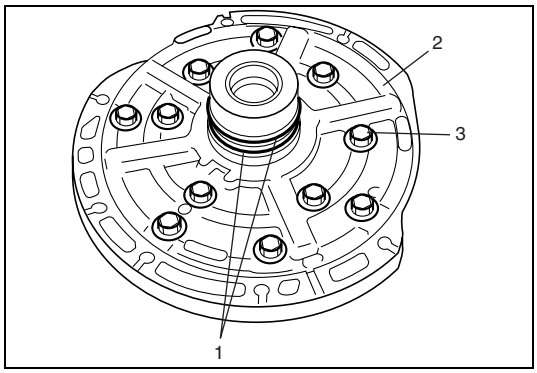

3) After applying A/T fluid to new seal ring (1), install it to oil pump body.
4) Install stator shaft (2) to oil pump body and tighten 11 oil pump subassembly bolts (3) to specification.

Oil pump subassembly bolts
(a): 10 N·m (1.0 kg-m, 7.5 lb-ft)

Oil Pump Assembly Inspection

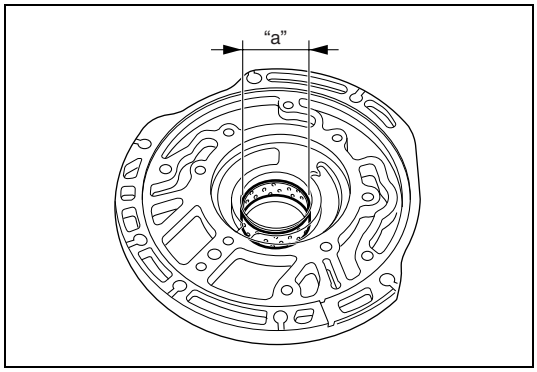

1) Measure inner diameter "a" of oil pump body bush. When measured value exceeds limit value, replace oil pump assembly.

Oil pump body bush bore
Limit "a": 38.19 mm (1.504 in)

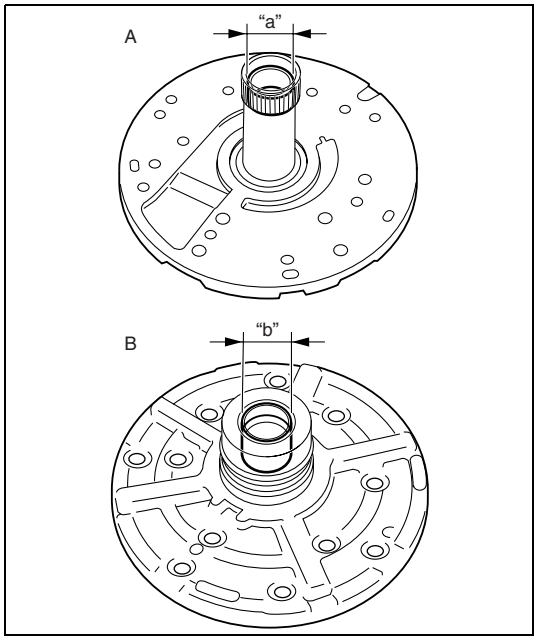

2) Measure inner diameters "a" and "b" of stator shaft bush. When measured value exceeds limit value, replace oil pump assembly.

Stator shaft bush bore
Limit "a": 18.50 mm (0.728 in.)
"b": 23.40 mm (0.921 in.)

A: Torque converter side
B: Transmission case side

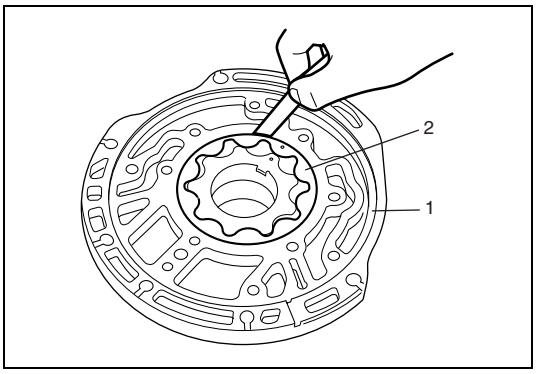

3) Using thickness gauge, measure body clearance between oil pump body (1) and driven gear (2). When measured value is out of specified range, replace oil pump assembly.

Clearance between driven gear and oil pump body
Standard: 0.10 – 0.17 mm (0.0039 – 0.0067 in.)

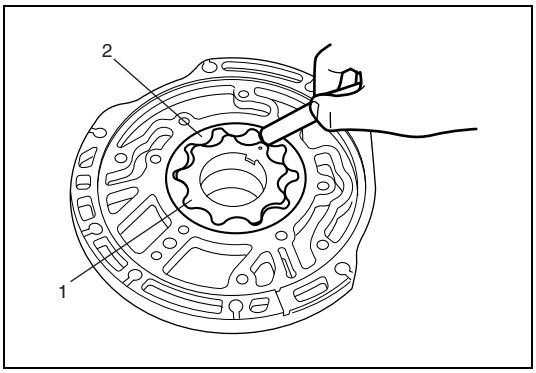

4) Using thickness gauge, measure chip clearance between drive gear (1) and driven gear (2). When measured value is out of specified range, replace oil pump assembly.

Tip clearance between oil pump drive gear and oil pump driven gear
Standard: 0.07 – 0.15 mm (0.0028 – 0.0059 in.)

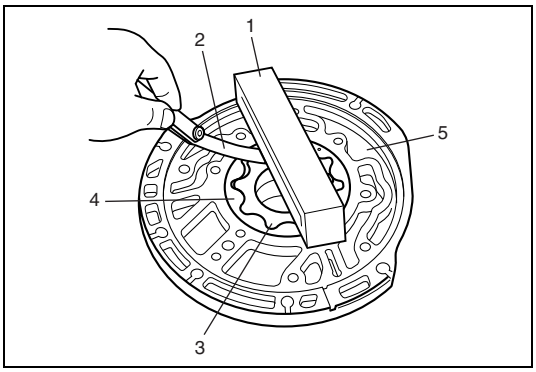

5) Using a straightedge (1) and a feeler gauge (2), measure side clearance of drive gear (3) and driven gear (4) with oil pump body (5). When measured value is out of specified range, replace oil pump assembly.

Side clearance between gears and oil pump body
Standard: 0.02 – 0.05 mm (0.0008 – 0.0019 in.)

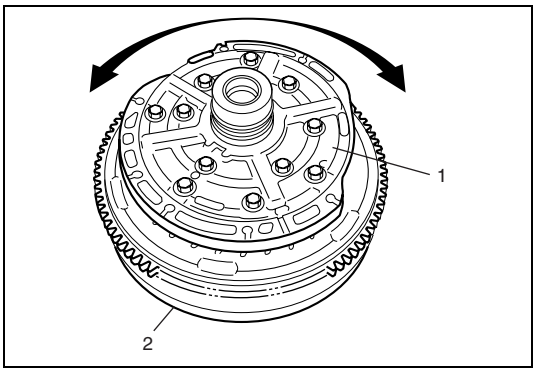

6) Install oil pump assembly (1) to torque converter (2) and check if it turns smoothly.

Forward Clutch & Input Shaft Assembly Components

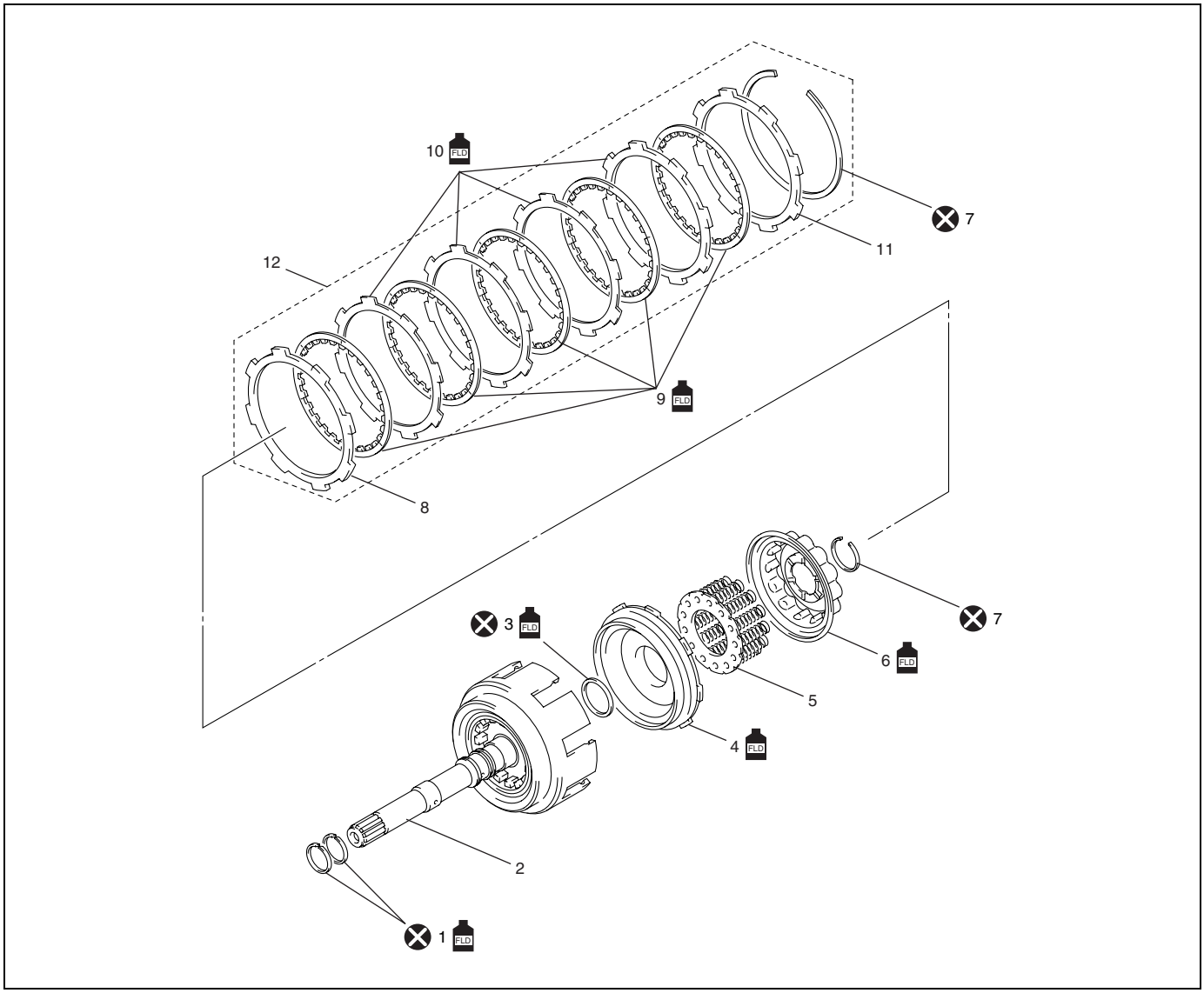

1. Seal ring	6. Forward clutch balancer	11. Separator plate
2. Input shaft	7. Snap ring	12. Forward clutch disc set
3. O-ring	8. Retaining plate	FLD Apply automatic transmission fluid.
4. Forward clutch piston	9. Friction disc	⊗ Do not reuse.
5. Forward clutch piston return spring	10. Friction plate	

Forward Clutch & Input Shaft Assembly Disassembly and Reassembly

Disassembly

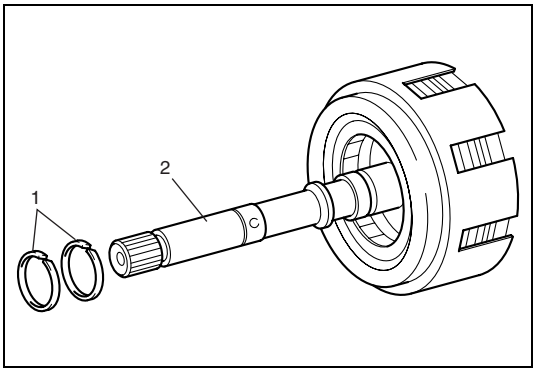

1) Remove 2 seal rings (1) from input shaft (2).

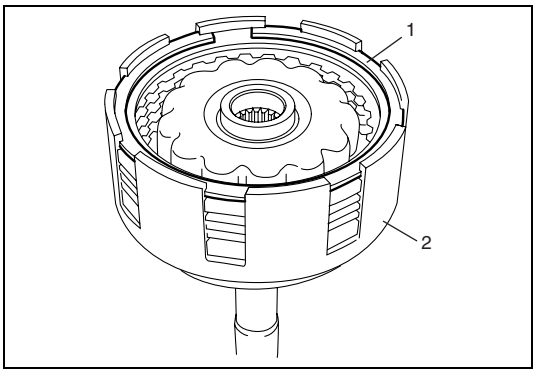

2) Remove snap ring (1) from input shaft (2).

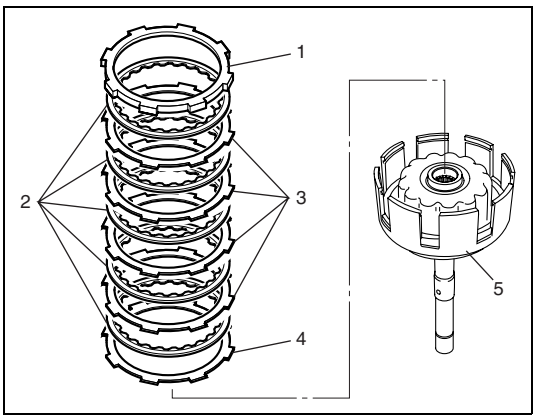

3) Remove forward clutch disc set (separator plate (1), 5 friction discs (2), 4 friction plates (3) and retaining plate (4)) from input shaft (5).

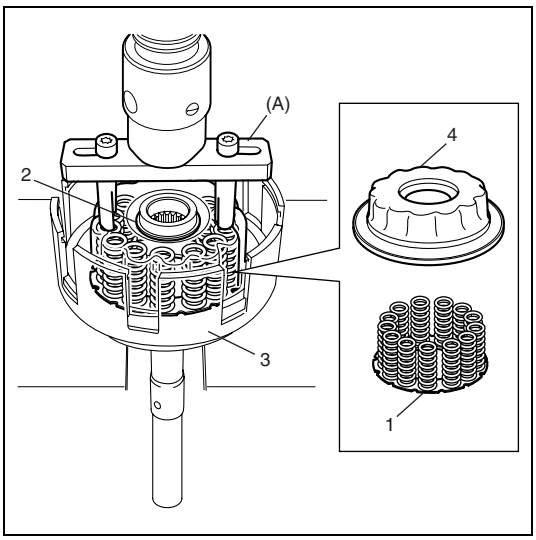

4) Using special tool and hydraulic press, compress forward clutch piston return spring (1) and remove snap ring (2) from input shaft (3).

Special tool
(A): 09926-96520

5) Remove forward clutch balancer (4) and forward clutch piston return spring (1) from input shaft (3).

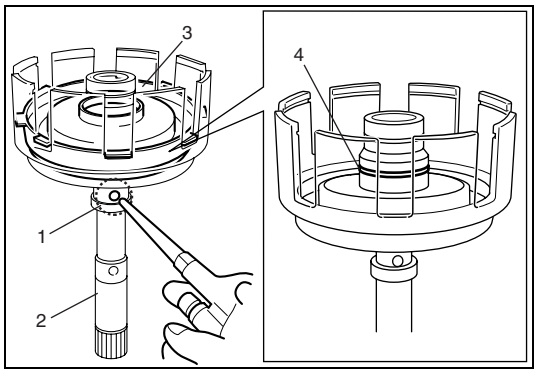

6) Blow air into oil passage (1) in input shaft (2) to remove forward clutch piston (3) from input shaft (2).
7) Remove O-ring (4) from input shaft (2).

Reassembly

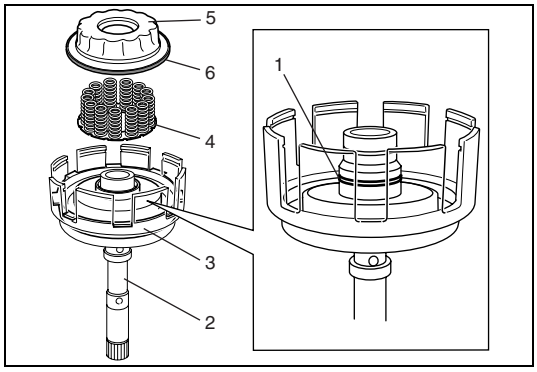

1) After applying A/T fluid to new O-ring (1), install it to input shaft (2).
2) Install forward clutch piston (3), forward clutch piston return spring (4) and forward clutch balancer (5) to input shaft (2).

NOTE:

Apply A/T fluid to seals (6) of forward clutch piston and forward clutch balancer.

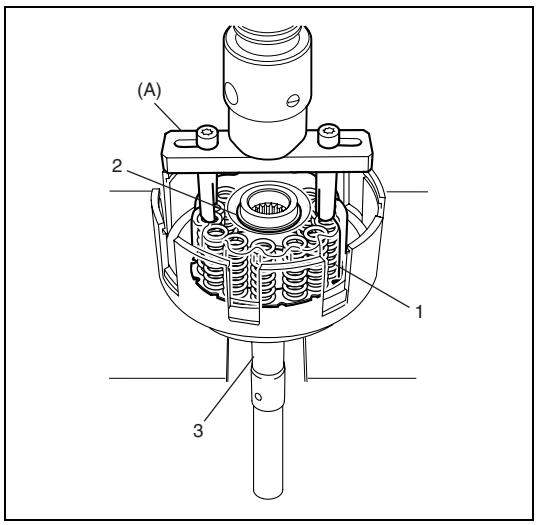

3) Using special tool and hydraulic press, compress forward clutch piston return spring (1) and install new snap ring (2) to input shaft (3).

Special tool
(A): 09926-96520

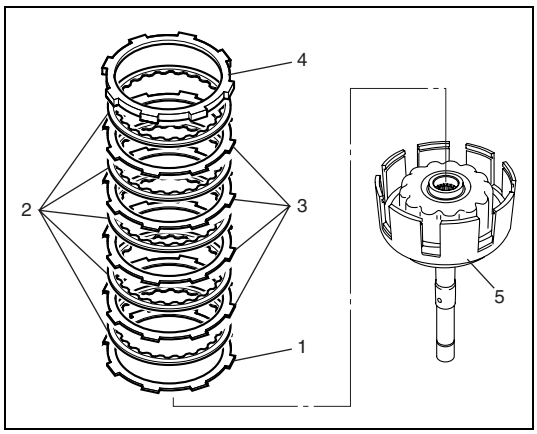

4) Install forward clutch disc set (retaining plate (1), 5 friction discs (2), 4 friction plates (3) and separator plate (4)) to input shaft (5).

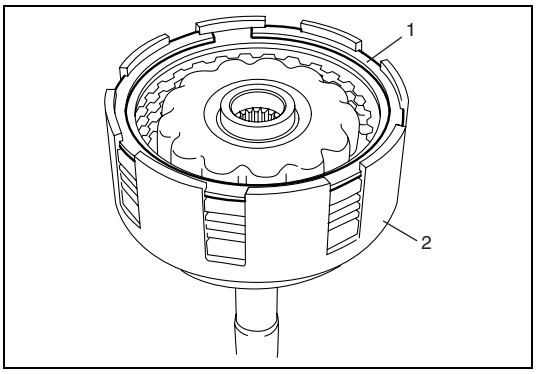

5) Install snap ring (1) to input shaft (2).

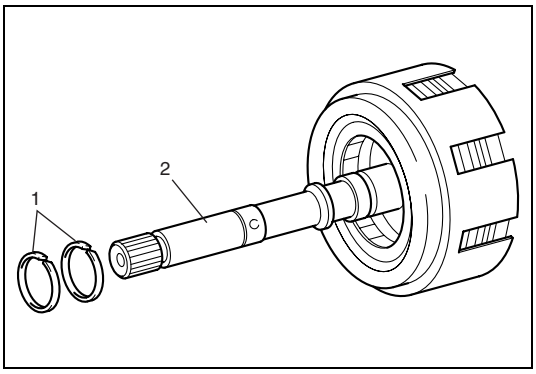

6) Check piston stroke of forward clutch referring to “Forward Clutch & Input Shaft Assembly Inspection” in this section.
7) After applying A/T fluid to 2 new seal rings (1), install them to input shaft (2).

Forward Clutch & Input Shaft Assembly Inspection

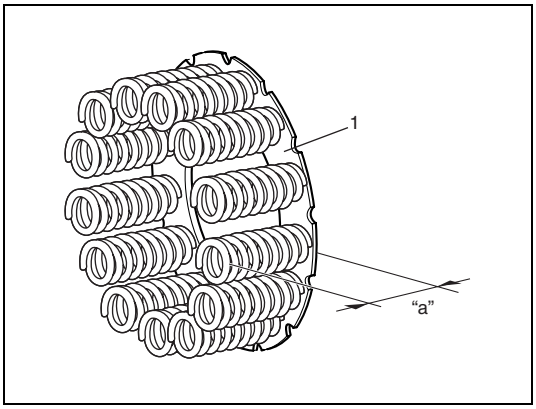

- Check forward clutch disc set for burn, damage, deformation or discoloration. When there is anything faulty, replace it.
- Measure free length “a” of forward clutch piston return spring (1). When measured value is less than specified value, replace it.

NOTE:

Free length “a” includes spring seat thickness.

Forward clutch return spring free length
“a”: 26.84 mm (1.057 in.)

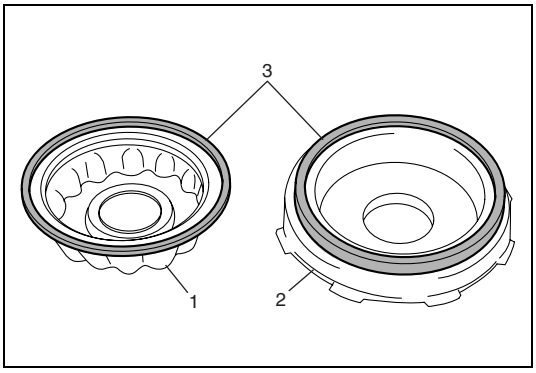

- Check seals (3) around forward clutch balancer (1) and forward clutch piston (2) for any damage. When there is anything faulty, replace it.

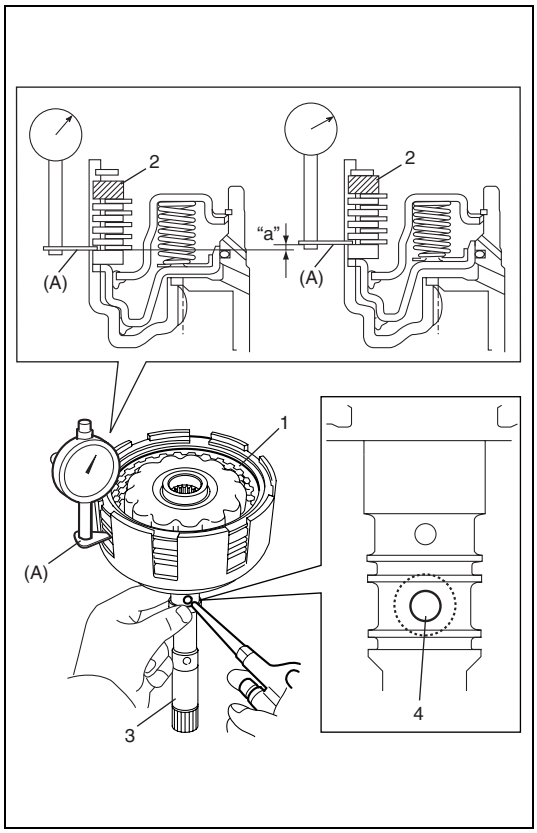

Piston Stroke Check

1) Install forward clutch disc set (1) (retaining plate, 5 friction discs, 4 friction plates and separator plate (2)) to input shaft (3), then install snap ring.
2) Blow air into oil passage (4) in input shaft and measure piston stroke "a" with special tool. When measured value is out of specified value range, change thickness of separator plate so as to obtain specified value and then measure piston stroke "a" again.

Special tool
(A): 09952-06010

Forward clutch piston stroke
"a" 1.25 – 1.55 mm (0.049 – 0.061 in.)

Available forward clutch separator plate thickness

Thickness
4.9 mm (0.193 in.)
4.7 mm (0.185 in.)
4.5 mm (0.177 in.)
4.3 mm (0.169 in.)
4.1 mm (0.161 in.)

Direct Clutch & Output Shaft Assembly Components

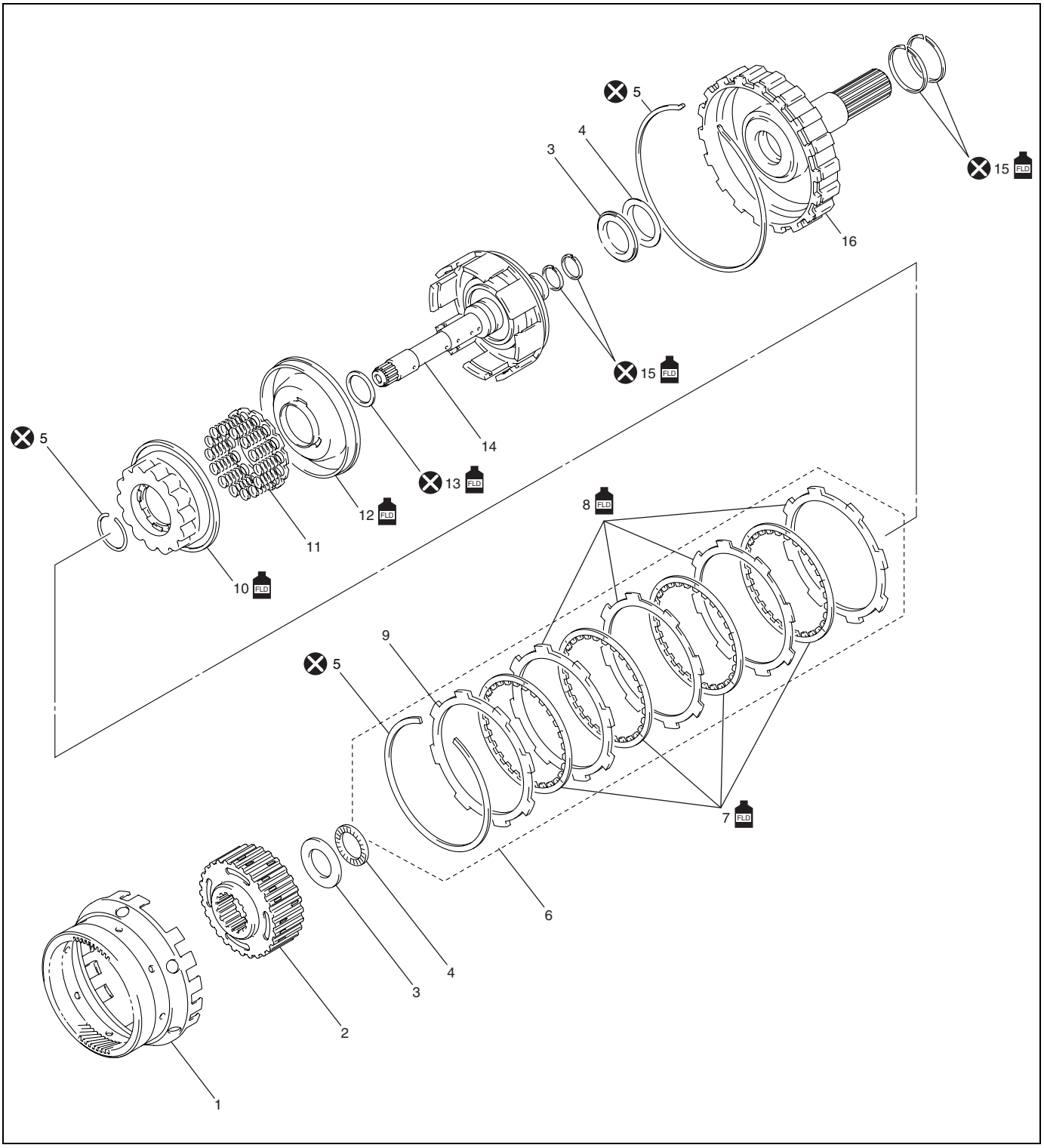

1. Ring gear	7. Friction disc	13. O-ring
2. Direct clutch hub	8. Friction plate	14. Intermediate shaft
3. Bearing	9. Separator plate	15. Seal ring
4. Bearing race	10. Direct clutch balancer	16. Output shaft
5. Snap ring	11. Direct clutch piston return spring	FLD Apply automatic transmission fluid.
6. Direct clutch disc set	12. Direct clutch piston	Do not reuse.

Direct Clutch & Output Shaft Assembly Disassembly and Reassembly

Disassembly

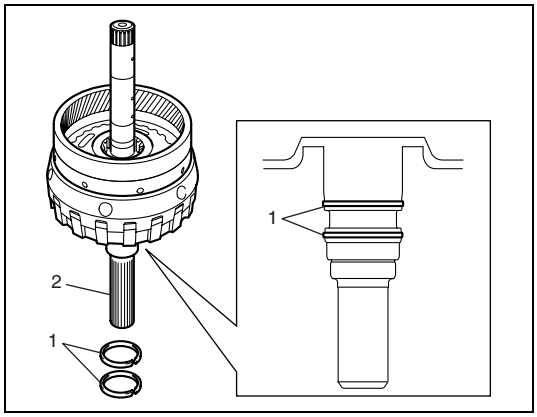

1) Remove 2 seal rings (1) from output shaft (2).

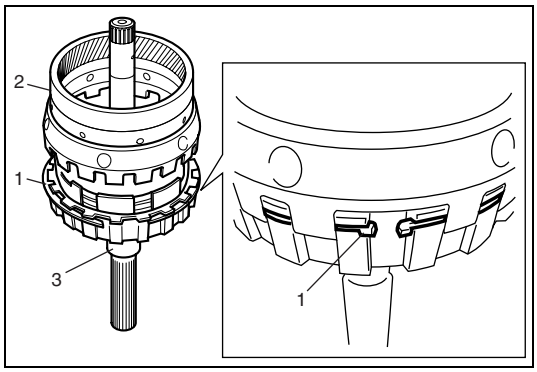

2) Compress snap ring (1) and remove ring gear (2) from output shaft (3).
3) Remove snap ring (1).

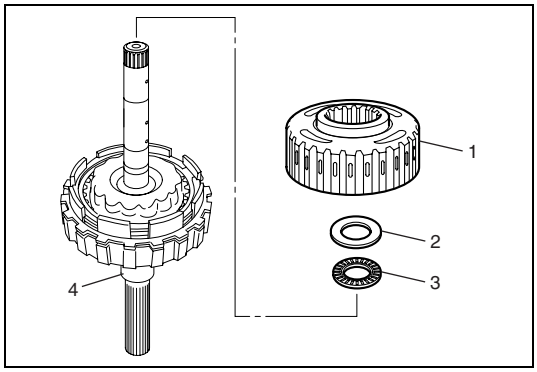

4) Remove direct clutch hub (1), bearing race (2) and bearing (3) from output shaft (4).

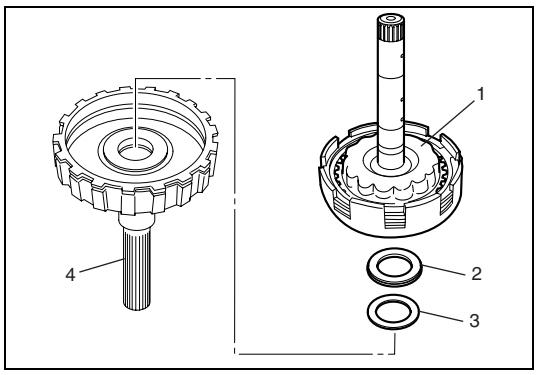

5) Remove direct clutch assembly (1), bearing (2) and bearing race (3) from output shaft (4).

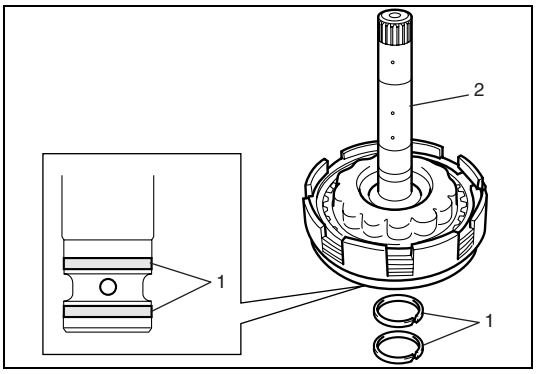

6) Remove 2 seal rings (1) from intermediate shaft (2).

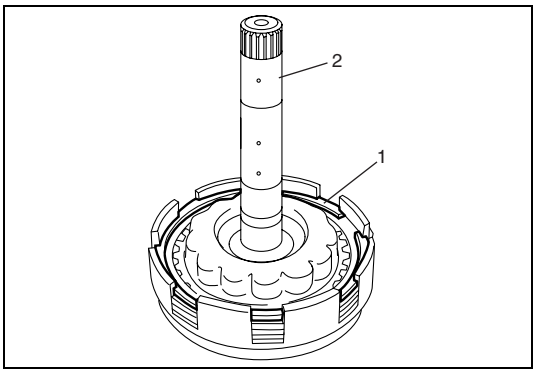

7) Remove snap ring (1) from intermediate shaft (2).

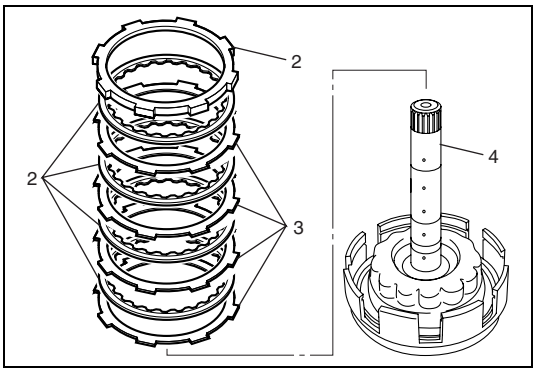

8) Remove direct clutch disc set (separator plate (1), 4 friction discs (2) and 4 friction plates (3)) from intermediate shaft (4).

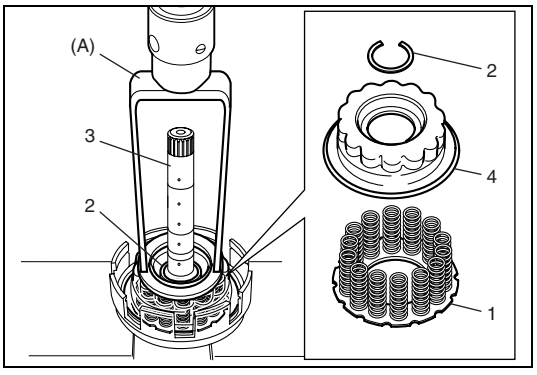

9) Using special tool and hydraulic press, compress direct clutch piston return spring (1) and remove snap ring (2) from intermediate shaft (3).

Special tool
(A): 09926-97610

10) Remove direct clutch balancer (4) and direct clutch piston return spring (1) from intermediate shaft (3).

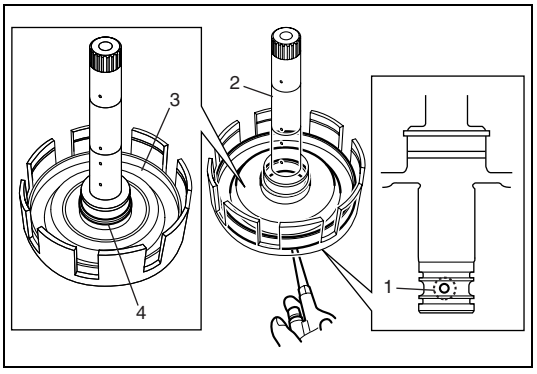

11) Blow air into oil passage (1) in intermediate shaft (2) to remove direct clutch piston (3) from intermediate shaft (2).
12) Remove O-ring (4) from intermediate shaft (2).

Reassembly

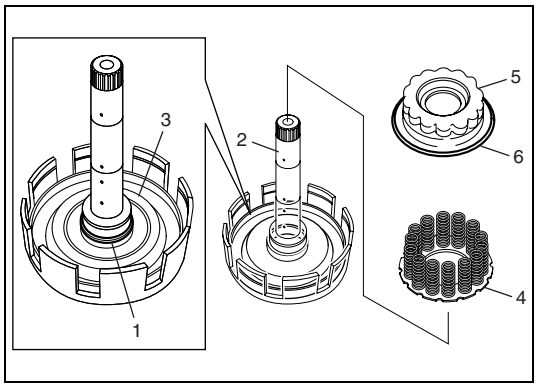

1) After applying A/T fluid to O-ring (1), install it to intermediate shaft (2).
2) Install direct clutch piston (3), direct clutch piston return spring (4) and direct clutch balancer (5) to intermediate shaft (2).

NOTE:

Apply A/T fluid to seals (6) of direct clutch piston and direct clutch balancer.

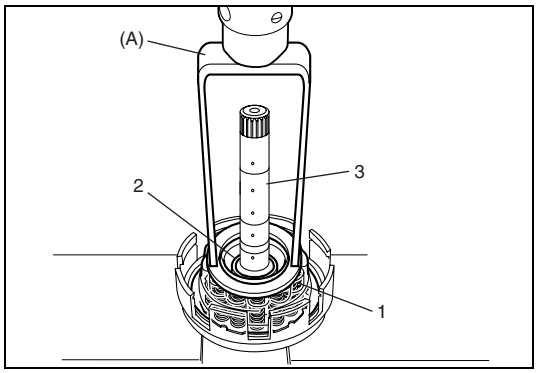

3) Using special tool and hydraulic press, compress direct clutch piston return spring (1) and install new snap ring (2) to intermediate shaft (3).

Special tool
(A): 09926-97610

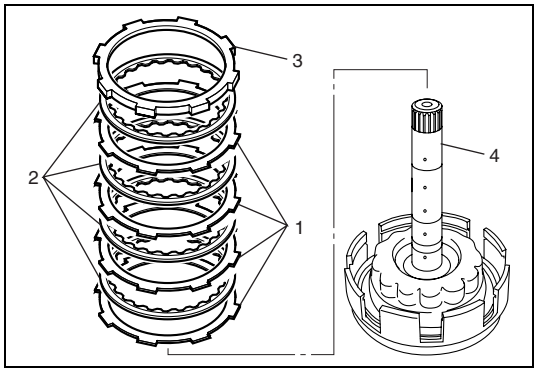

4) Install direct clutch disc set (4 friction plates (1), 4 friction discs (2) and separator plate (3)) to intermediate shaft (4).

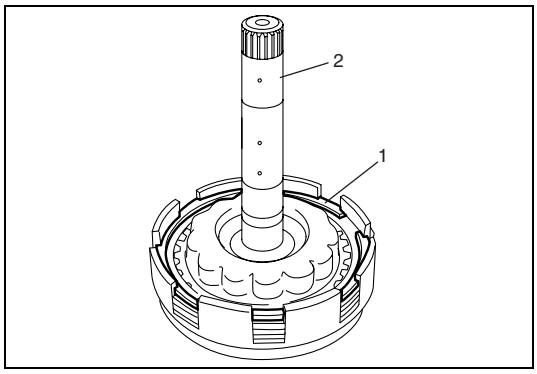

5) Install new snap ring (1) to intermediate shaft (2).

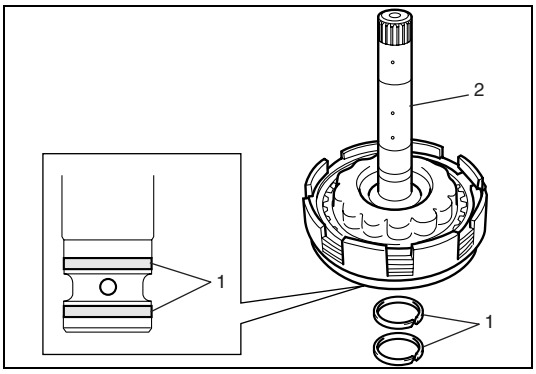

6) Check piston stroke of direct clutch referring to “Direct Clutch & Output Shaft Assembly Inspection” in this section.
7) After applying A/T fluid to 2 new seal rings (1), install them to intermediate shaft (2).

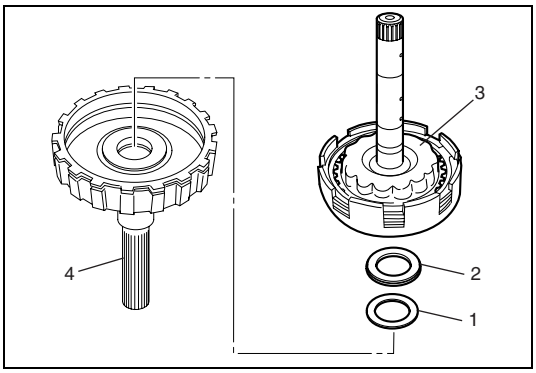

8) Install bearing race (1), bearing (2) and direct clutch assembly (3) to output shaft (4).

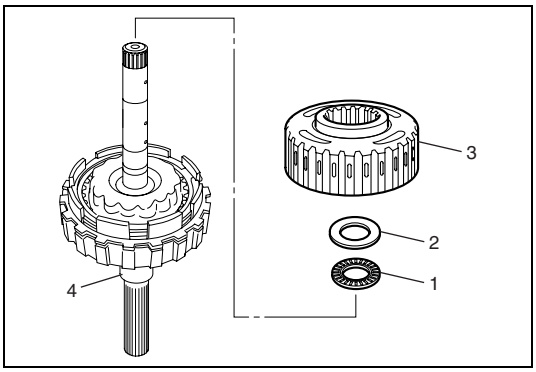

9) Install bearing (1), bearing race (2) and direct clutch hub (3) to output shaft (4).

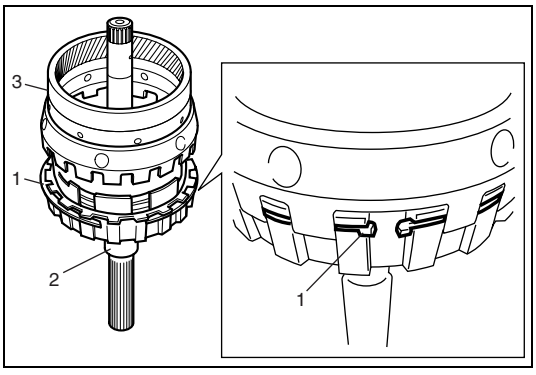

10) Install new snap ring (1) to output shaft (2).
11) Compress snap ring (1) and install ring gear (3) to output shaft (2).

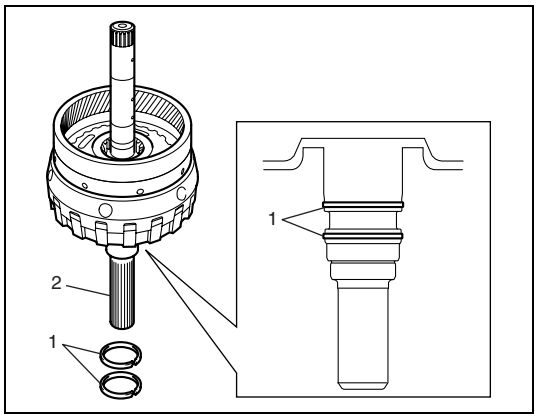

12) After applying A/T fluid to new 2 seal rings (1), install them to output shaft (2).

Direct Clutch & Output Shaft Assembly Inspection

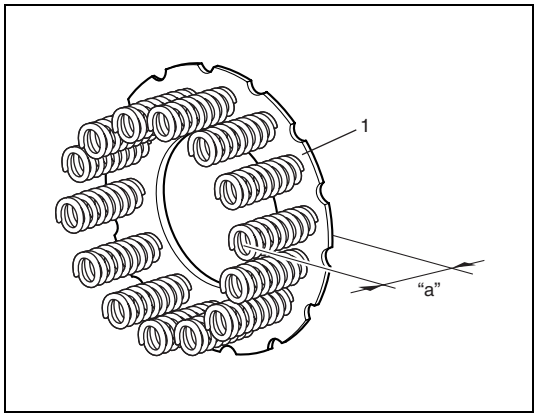

- Check direct clutch disc set for burn, damage, deformation or discoloration. When there is anything faulty, replace it.
- Measure free length "a" of direct clutch piston return spring. When measured value is less than specified value, replace it.

NOTE:

Free length "a" includes spring seat (1) thickness.

Direct clutch return spring free length
"a": 28.14 mm (1.108 in.)

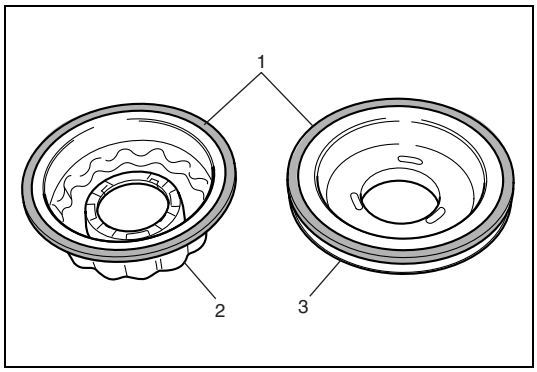

- Check seals (1) around direct clutch balancer (2) and direct clutch piston (3) for any damage. When there is anything faulty, replace it.

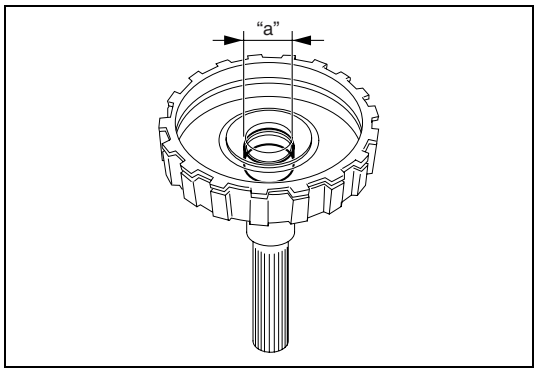

- Measure inner diameter "a" of output shaft bush. When measured value exceeds limit value, replace output shaft.

Output shaft shaft bush bore
Limit "a": 23.35 mm (0.919 in.)

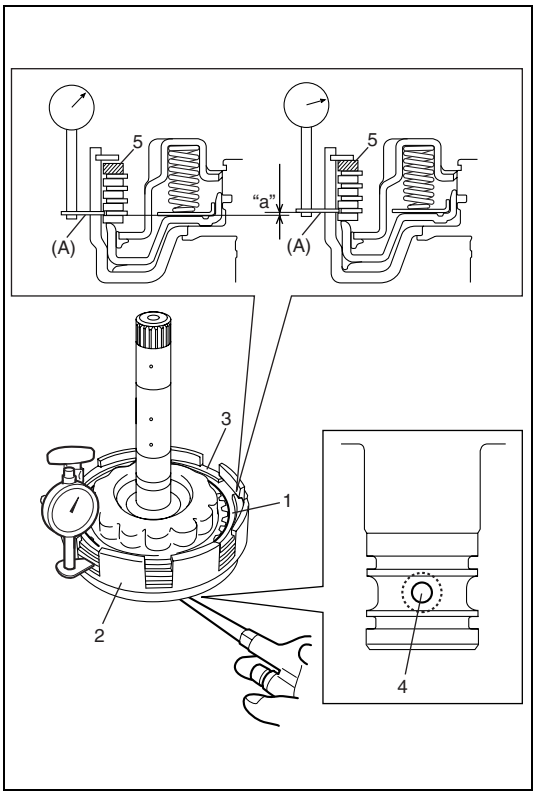

Piston Stroke Check

1) Install direct clutch disc set (1) (4 friction plates, 4 friction discs and separator plate) to intermediate shaft (2), then install snap ring (3).
2) Blow air into oil passage (4) in intermediate shaft (2) and measure piston stroke "a", using special tool. When measured value is out of specified value range, change thickness of separator plate (5) to obtain specified value, then measure piston stroke "a" again.

Special tool
(A): 09952-06010

Direct clutch piston stroke
"a" 0.6 – 0.9 mm (0.024 – 0.035 in.)

Available direct clutch separator plate thickness

Thickness
3.35 mm (0.132 in.)
3.15 mm (0.124 in.)
2.95 mm (0.116 in.)
2.75 mm (0.108 in.)

Reverse Clutch Assembly Components

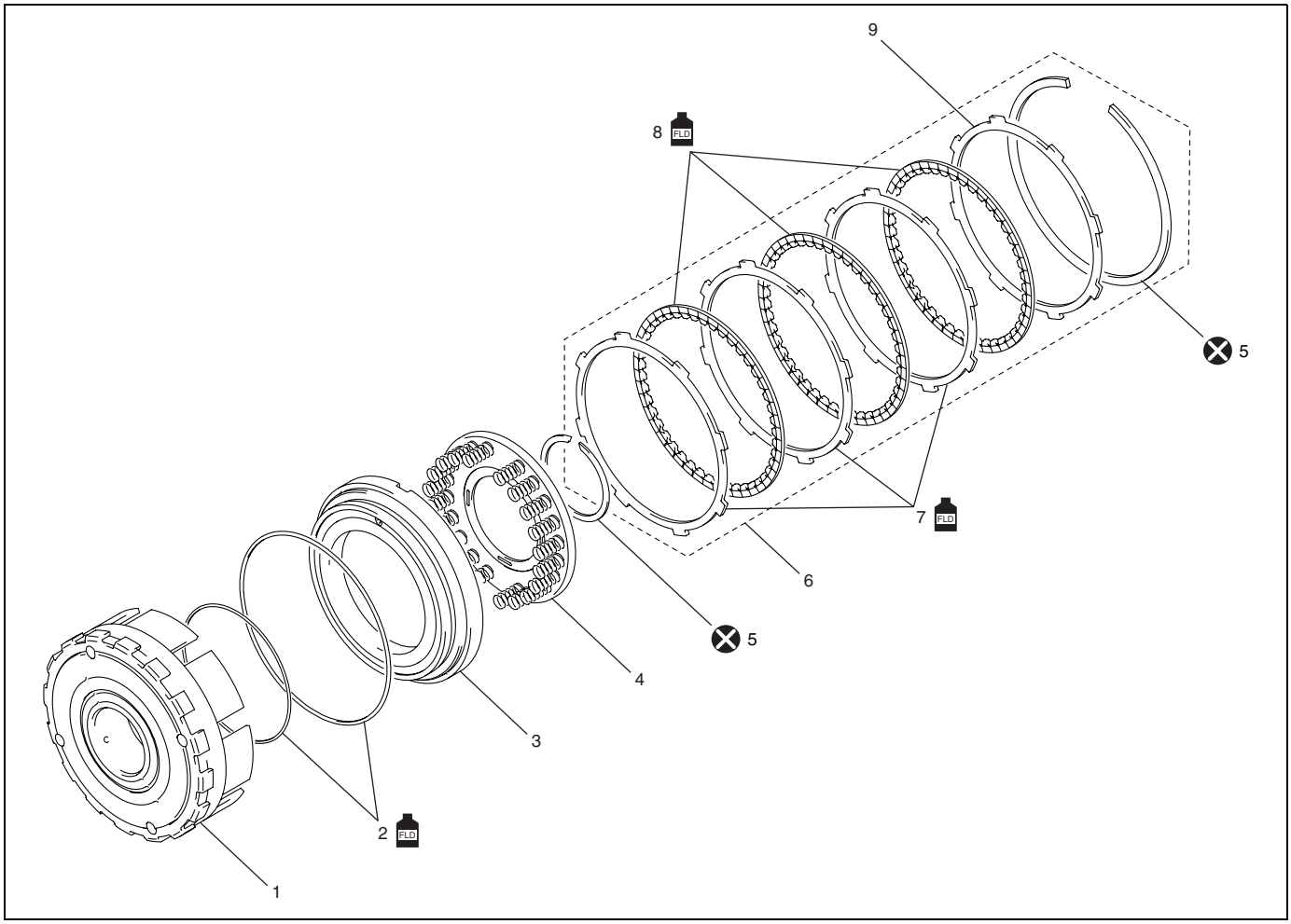

1. Reverse clutch drum	5. Snap ring	9. Separator plate
2. O-ring	6. Reverse clutch disc set	FLD Apply automatic transmission fluid.
3. Reverse clutch piston	7. Friction plate	Do not reuse.
4. Reverse clutch piston return spring	8. Friction disc	

Reverse Clutch Assembly Disassembly and Reassembly

Disassembly

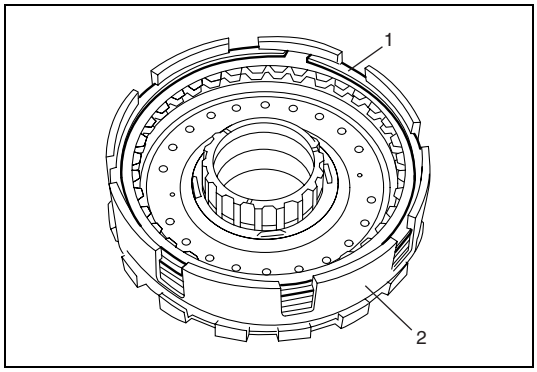

1) Remove snap ring (1) from reverse clutch drum (2).

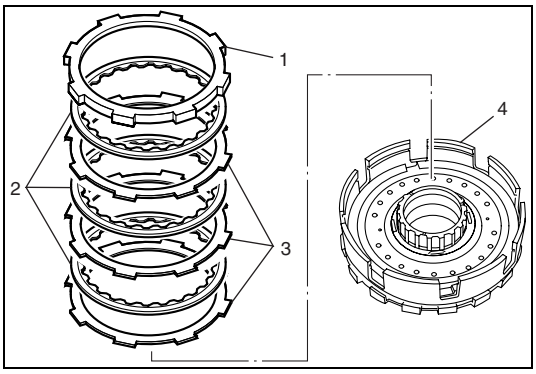

2) Remove reverse clutch disc set (separator plate (1), 3 friction discs (2) and 3 friction plates (3)) from reverse clutch drum (4).

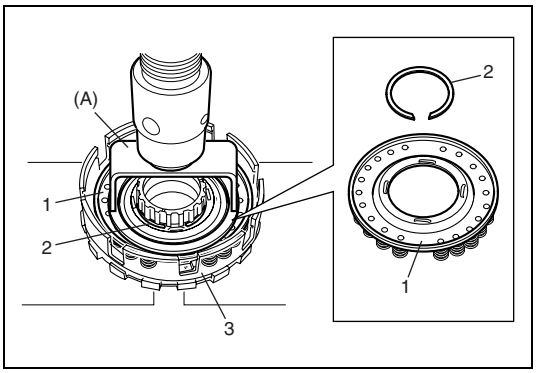

3) Using special tool and hydraulic press, compress reverse clutch piston return spring (1) and remove snap ring (2) from reverse clutch drum (3).

Special tool
(A): 09926-96010

4) Remove reverse clutch piston return spring (1) from reverse clutch drum (3).

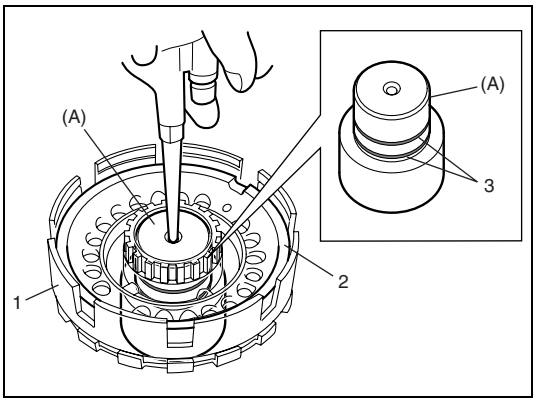

5) Install special tool to reverse clutch drum (1).

NOTE:
Install 2 seal rings (3) of oil pump starter shaft to special tool.

Special tool
(A): 09926-26030

6) Blow air into special tool to remove reverse clutch piston (2) from reverse clutch drum (1).

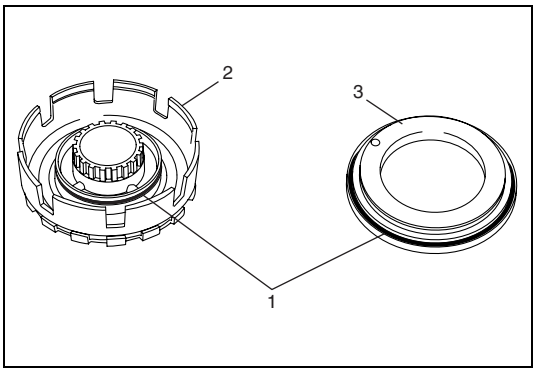

7) Remove O-rings (1) from reverse clutch drum (2) and reverse clutch piston (3).

Reassembly

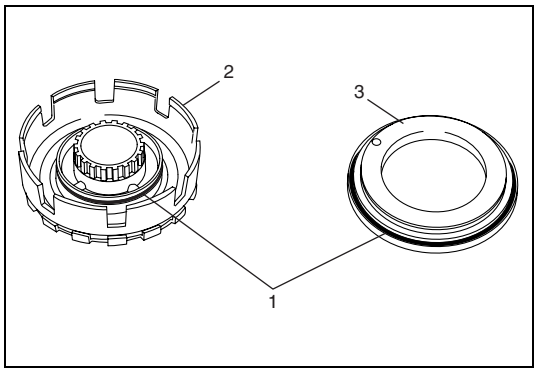

1) After applying A/T fluid to O-rings (1), install them to reverse clutch drum (2) and reverse clutch piston (3).

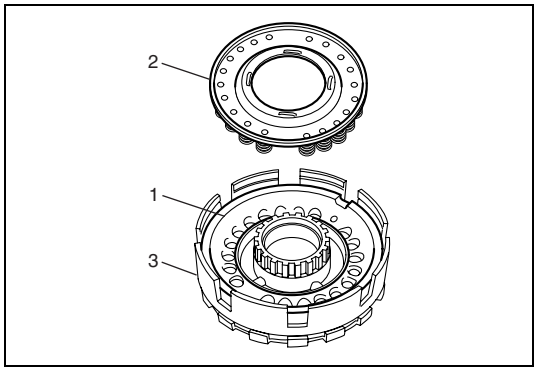

2) Install reverse clutch piston (1) and reverse clutch piston return spring (2) to reverse clutch drum (3).

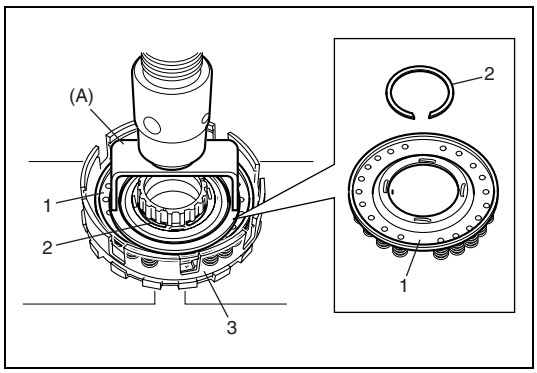

3) Using special tool and hydraulic press, compress reverse clutch piston return spring (1) and install new snap ring (2) to reverse clutch drum (3).

Special tool
(A): 09926-96010

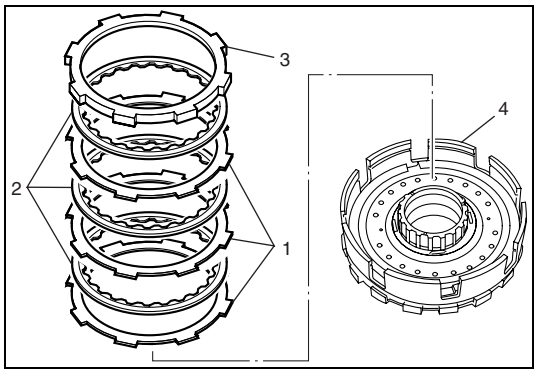

4) Install reverse clutch disc set (3 friction plates (1), 3 friction discs (2) and separator plate (3)) to reverse clutch drum (4).

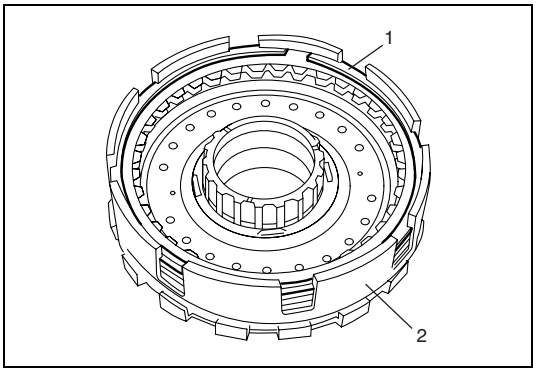

5) Install new snap ring (1) to reverse clutch drum (2).
6) After completion of reassembly, check piston stroke referring to “Reverse Clutch Assembly Inspection” in this section.

Reverse Clutch Assembly Inspection

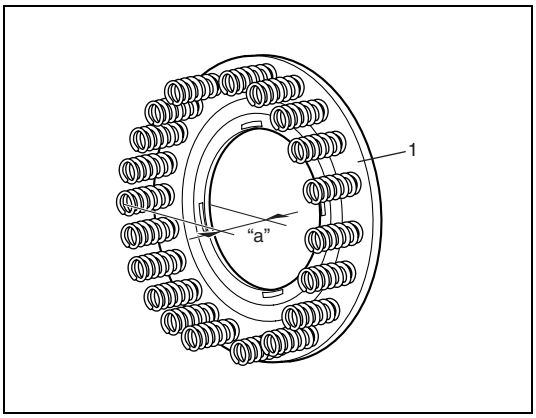

- Check reverse clutch disc set for burn, damage, deformation or discoloration. When there is anything faulty, replace it.
- Measure free length “a” of reverse clutch piston return spring. When measured value is less than specified value, replace it.

NOTE:

Free length “a” includes thickness of spring seat (1).

Reverse clutch piston return spring free length
“a”: 19.46 mm (0.766 in.)

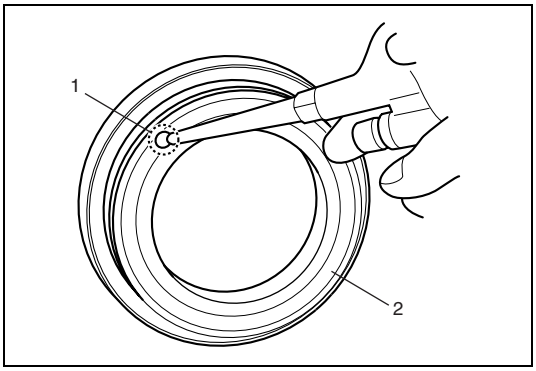

- Blow air into check ball (1) of reverse clutch piston (2) for air leakage.
- Shake reverse clutch piston (2) lightly to confirm that check ball (1) is not seized.

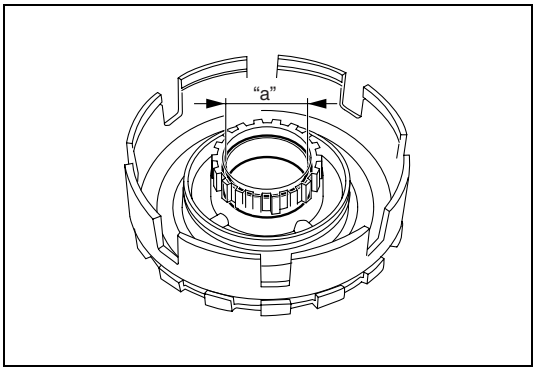

- Measure inner diameter “a” of reverse clutch drum. When measured value exceeds limit value, replace it.

Reverse clutch drum bush bore
Limit “a”: 41.08 mm (1.617 in.)

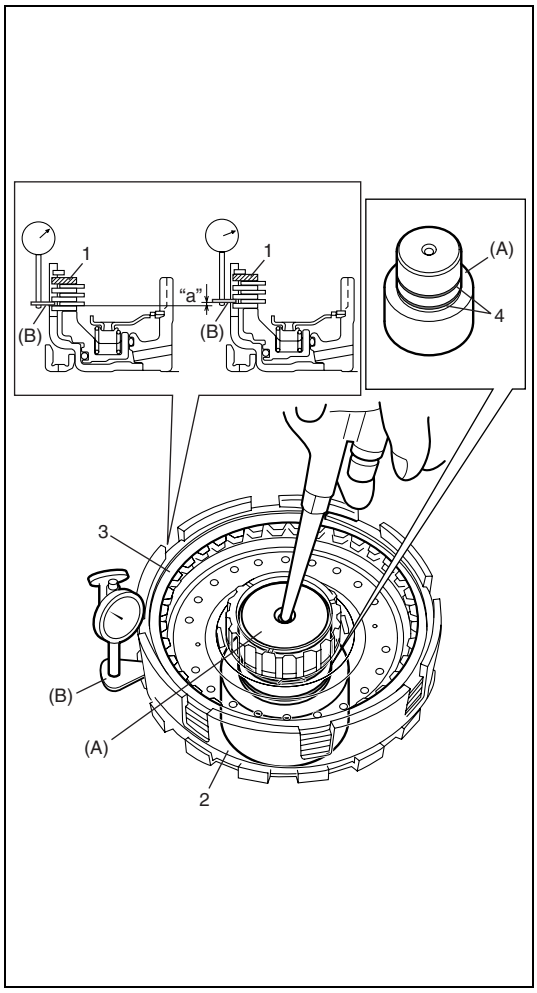

Piston Stroke Check

1) Install reverse clutch disc set (3) (3 friction plates, 3 friction discs and separator plate (1)) to reverse clutch drum.
2) Install special tool (A) to reverse clutch assembly (2).

NOTE:

Install 2 seal rings (4) of oil pump stator shaft to special tool (A).

Special tool
(A): 09926-26030

3) Blow air into special tool (A) and measure pin stroke "a" with special tool (B). When measured value is out of specified value range, change thickness of separator plate (1) to obtain specified value, then measure piston stroke "a" again.

Special tool
(B): 09925-06010

Reverse clutch piston stroke
"a": 0.88 – 1.28 mm (0.035 – 0.050 in.)

Available reverse clutch separator plate thickness

Thickness
3.15 mm (0.124 in.)
2.95 mm (0.116 in.)
2.75 mm (0.108 in.)

O/D and 2nd Coast Brake Components

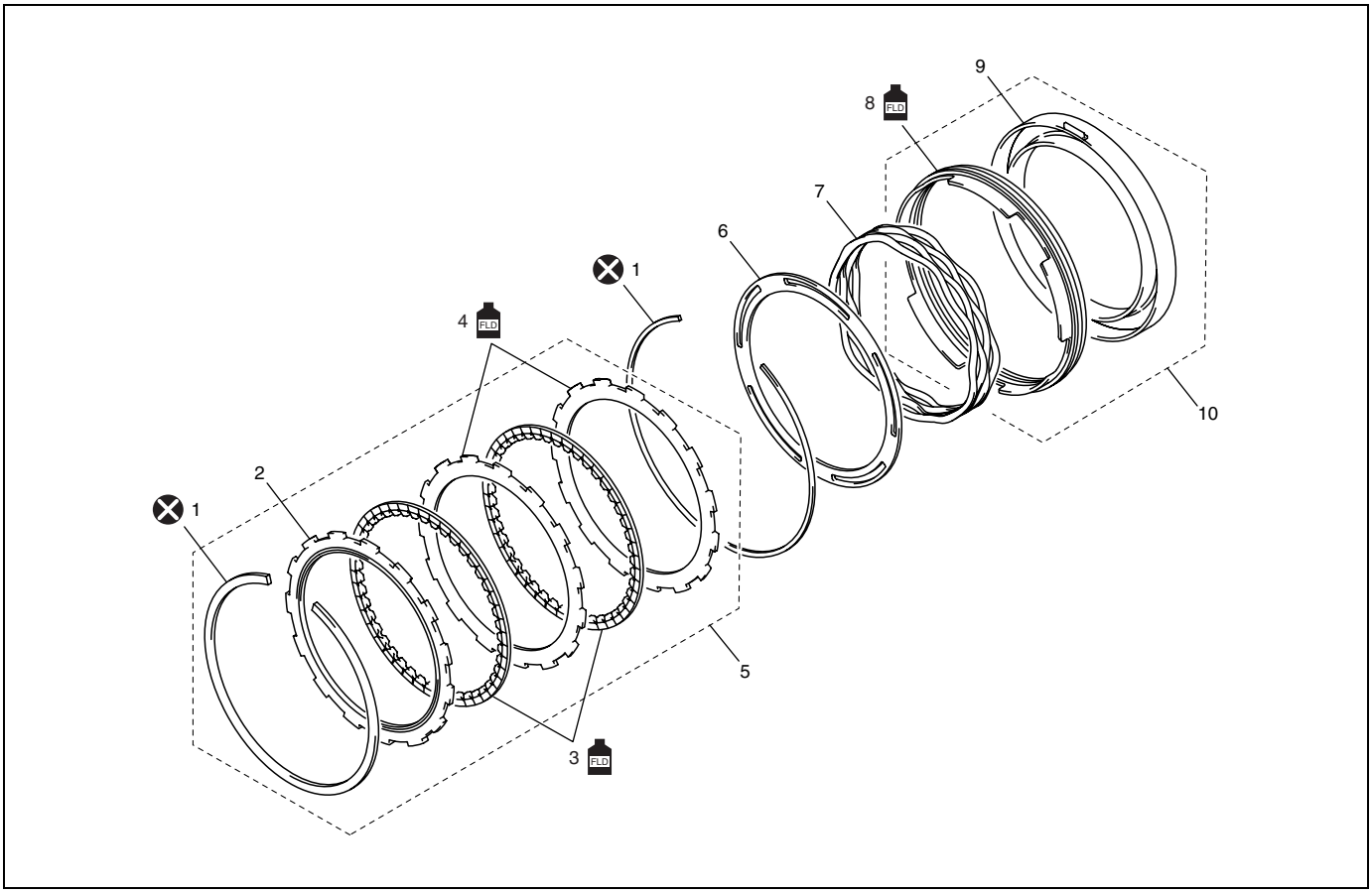

1. Snap ring	5. O/D and 2nd coast brake disc set	9. O/D and 2nd coast brake piston cylinder
2. Separator plate	6. O/D and 2nd coast brake piston return spring seat	10. O/D and 2nd coast brake piston assy
3. Friction disc	7. O/D and 2nd coast brake piston return spring	FLD Apply automatic transmission fluid.
4. Friction plate	8. O/D and 2nd coast brake piston	Do not reuse.

O/D and 2nd Coast Brake Disassembly and Reassembly

Disassembly

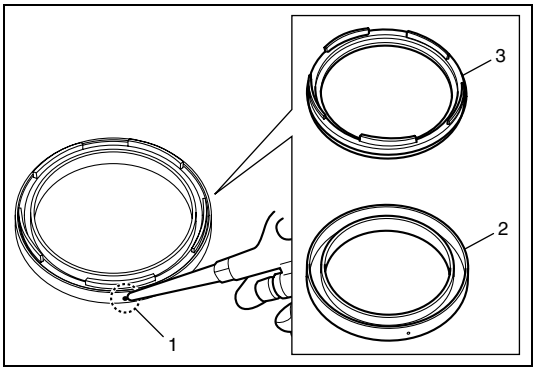

1) Blow air into oil passage (1) in O/D and 2nd coast brake cylinder (2) to remove O/D and 2nd coast brake piston (3).

Reassembly

For reassembly, reverse disassembly procedure, noting following point.

- Apply A/T fluid to seal of O/D and 2nd coast brake piston.

O/D and 2nd Coast Brake Inspection

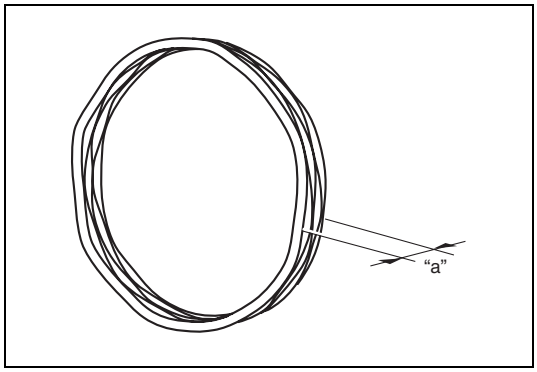

- Check O/D and 2nd coast brake disc set for burn, damage, deformation or discoloration. When there is anything faulty, replace it.
- Measure free length "a" of O/D and 2nd coast brake piston return spring. When measured value is less than specified value, replace it.

O/D and 2nd coast brake piston return spring free length "a": 19.8 mm (0.780 in.)

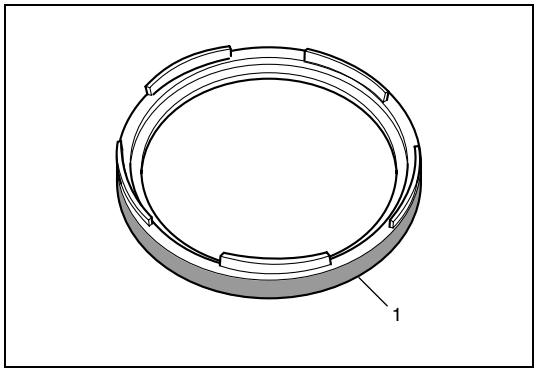

- Check O/D and 2nd coast brake piston seal (1) for damage. When there is anything faulty, replace it.

Pack Clearance Check

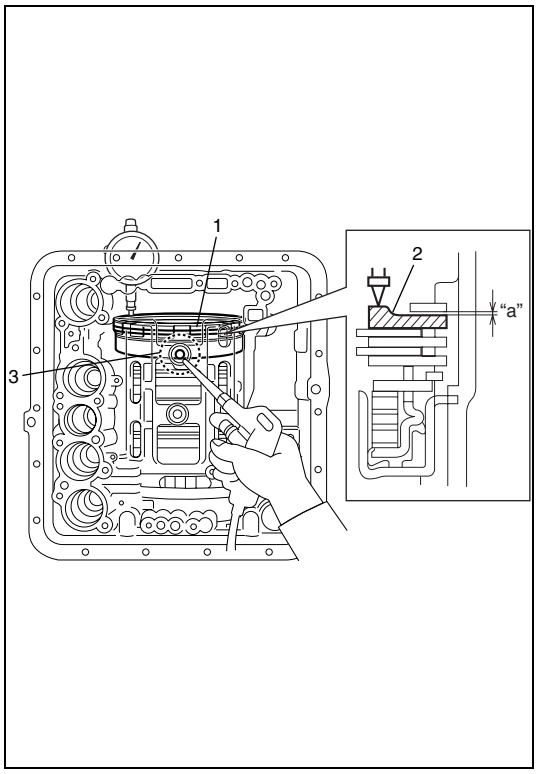

1) Install O/D and 2nd coast brake disc set (1) (2 friction plates, 2 friction discs and separator plate (2)) to transmission case, then install snap ring.
2) Blow air into oil passage (3) as shown in figure and measure pack clearance "a". When measured value is out of specified value range, change thickness of separator plate to obtain specified value and measure pack clearance "a" again.

Pack clearance
"a": 0.65 – 1.05 mm (0.026 – 0.041 in.)

Available O/D and 2nd coast brake separator plate thickness

Thickness
3.0 mm (0.118 in.)
2.8 mm (0.110 in.)
2.6 mm (0.102 in.)
2.4 mm (0.094 in.)

3) After inspection, remove snap ring, separator plate, 2 friction discs and 2 friction plates from transmission case.

2nd Brake Components

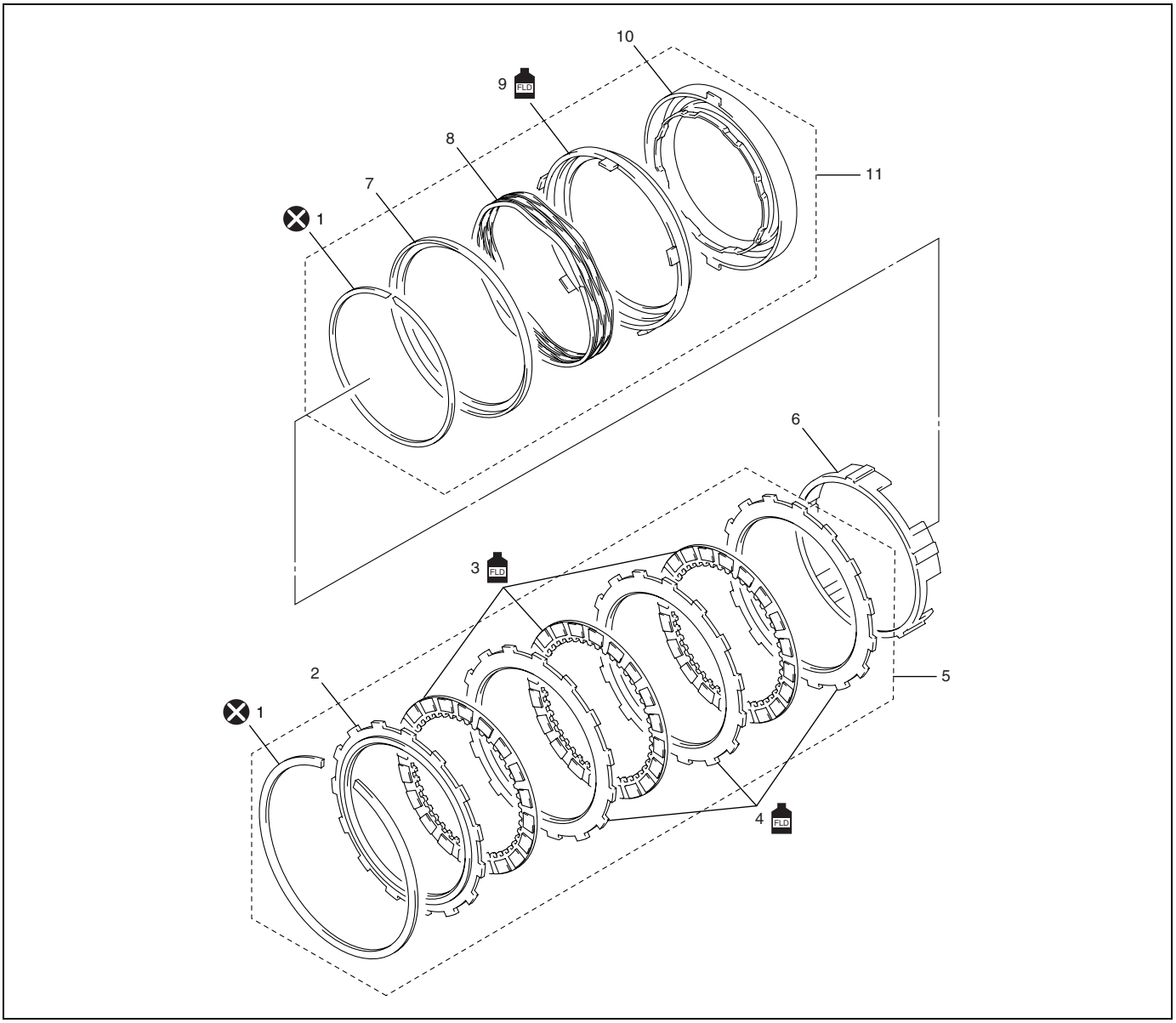

1. Snap ring	6. 2nd brake apply tube	11. 2nd brake piston assy
2. Separator plate	7. 2nd brake piston return spring seat	FLD Apply automatic transmission fluid.
3. Friction disc	8. 2nd brake piston return spring	⊗ Do not reuse.
4. Friction plate	9. 2nd brake piston	
5. 2nd brake disc set	10. 2nd brake cylinder	

2nd Brake Disassembly and Reassembly

Disassembly

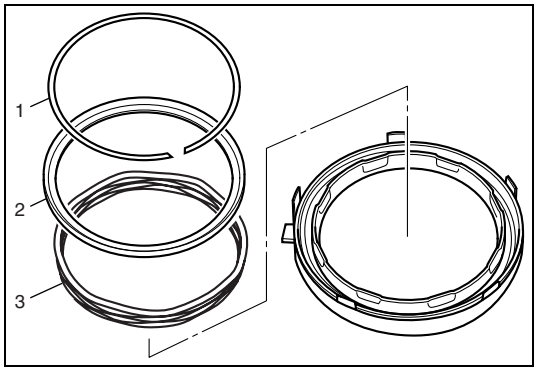

1) After removing snap ring (1), remove 2nd brake piston return spring seat (2) and 2nd brake piston return spring (3).

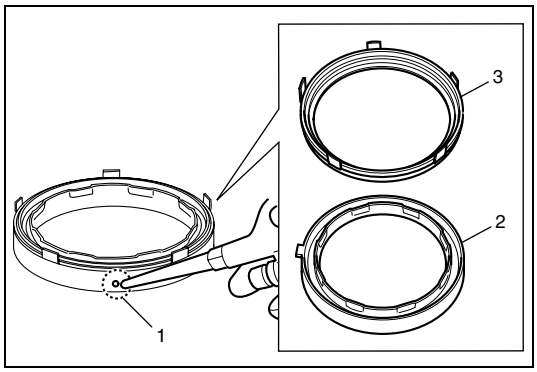

2) Blow air into oil passage (1) in 2nd brake cylinder (2) to remove 2nd brake piston (3).

Reassembly

For reassembly, reverse disassembly procedure, noting following points.

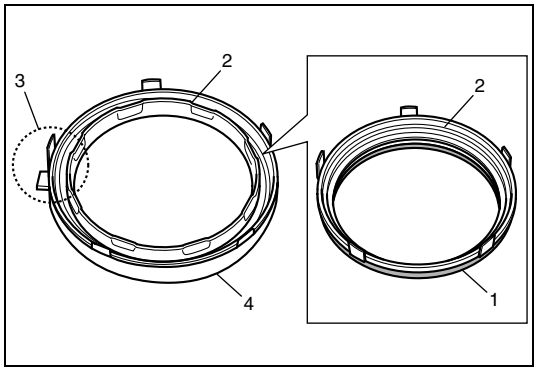

- Apply A/T fluid to seal (1) of 2nd brake piston (2).
- Align projection (3) of 2nd brake cylinder (4) and projection (3) of 2nd brake piston (2) for installation.
- Use new snap ring.

2nd Brake Inspection

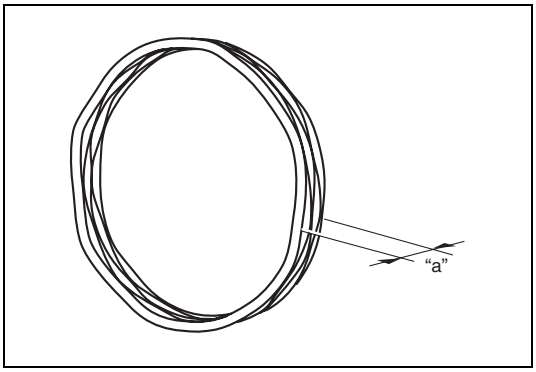

- Check 2nd brake disc set for burn, damage, deformation or discoloration. When there is anything faulty, replace it.
- Measure free length "a" of 2nd brake piston return spring. When measured value is less than specified value, replace it.

2nd brake piston return spring free length
"a": 16.8 mm (0.661 in.)

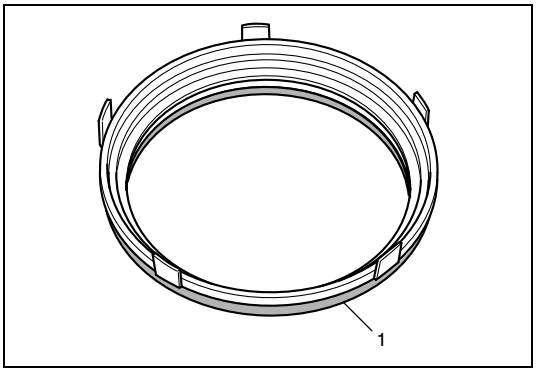

- Check 2nd brake piston seal (1) for damage. When there is anything faulty, replace it.

Pack Clearance Check

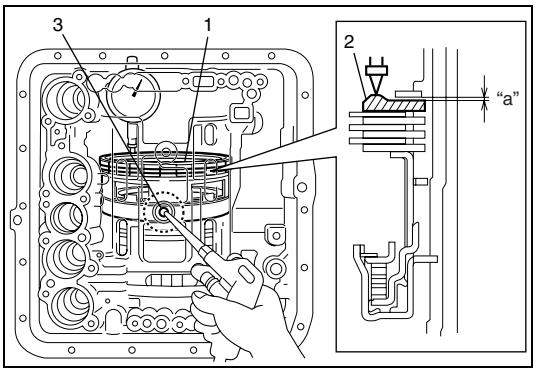

1) Install 2nd brake disc set (1) (3 friction plates, 3 friction discs and separator plate (2)) in transmission case, then install snap ring.
2) Blow air into oil passage (3) as shown in figure below and measure pack clearance "a". When measured value is out of specified range, it is possible that there is air leakage, seizure or worn 2nd brake disc set (1).

Pack clearance
"a": 0.44 – 1.16 mm (0.017 – 0.046 in.)

1st & Reverse Brake Components

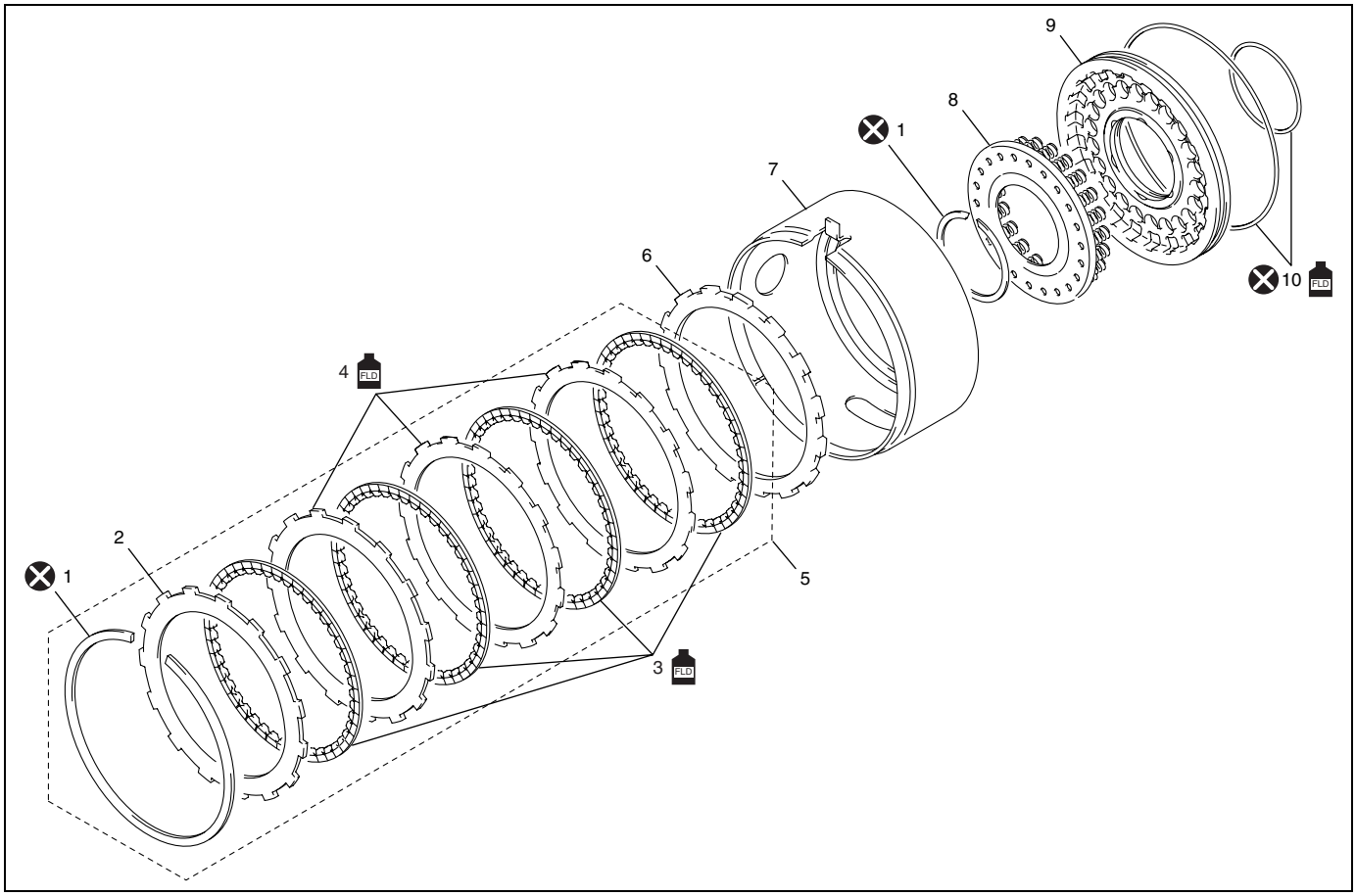

1. Snap ring	5. 1st and reverse brake disc set	9. 1st and reverse brake piston
2. Separator plate	6. Retaining plate	10. O-ring
3. Friction disc	7. 1st and reverse brake apply tube	FLD Apply automatic transmission fluid.
4. Friction plate	8. 1st and reverse brake piston return spring	Do not reuse.

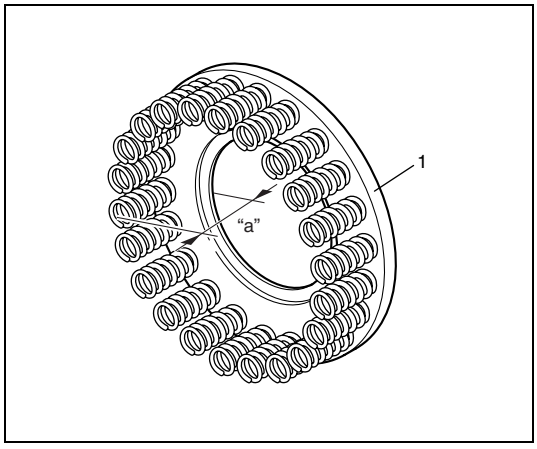

1st & Reverse Brake Inspection

- Check 1st and reverse brake disc set for burn, damage, deformation or discoloration. When there is anything faulty, replace it.
- Measure free length "a" of 1st and reverse brake piston return spring. When measured value is less than specified value, replace it.

NOTE:

Free length "a" includes thickness of spring seat (1).

1st and reverse brake piston return spring free length "a": 19.15 mm (0.754 in.)

Pack Clearance Check

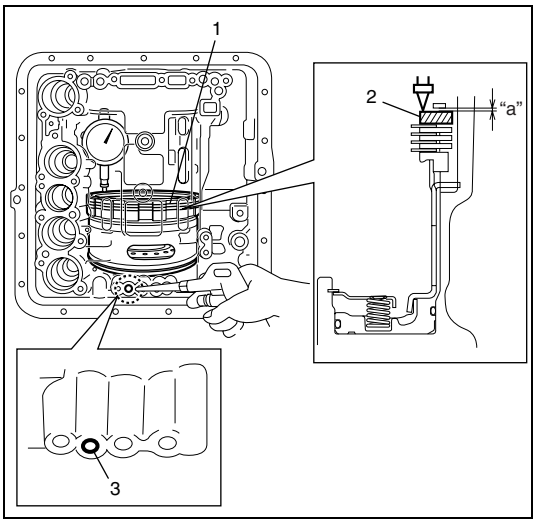

1) Install retaining plate and 1st and reverse brake disc set (1) (4 friction discs, 3 friction plates and separator plate (2)) in the transmission case, then install the snap ring.
2) Blow air into oil passage (3) as shown in figure below and measure pack clearance "a". When measured value is out of specified value range, it is possible that there is air leakage, seizure or worn 1st & reverse brake disc set (1).

Pack clearance
"a": 0.62 – 1.37 mm (0.024 – 0.054 in.)

3) After inspection, remove snap ring, separator plate, 4 friction discs, 3 friction plates and retaining plate from transmission case.

One-way Clutch No.1 Inspection

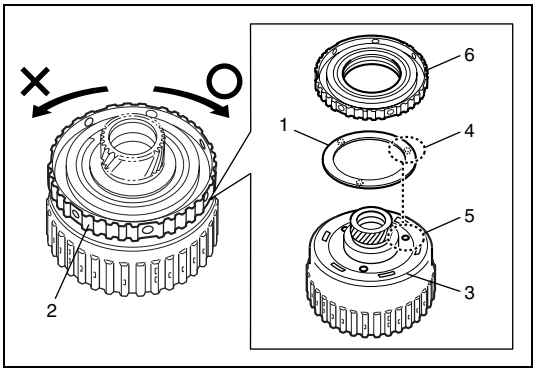

1) Install thrust washer (1) and one-way clutch No.1 (2) to front sun gear (one-way clutch No.1 inner race) (3).

NOTE:

Align projection (4) of thrust washer (1) and hole (5) in front sun gear (3).

2) Check that one-way clutch No.1 (2) moves smoothly when it is turned clockwise and it locks when it is turned counter-clockwise.

One-way Clutch No.2 Inspection

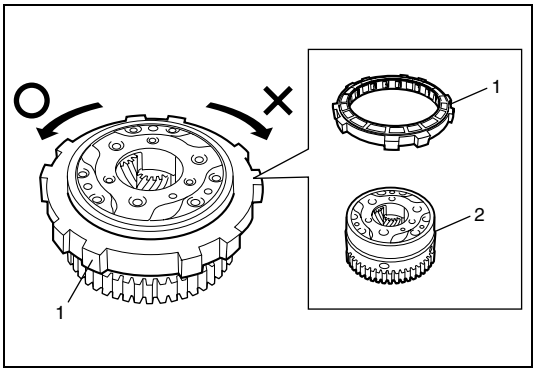

1) Install one-way clutch No.2 (1) to planetary gear assembly (one-way clutch No.2 inner race) (2).
2) Check that one-way clutch No.2 (1) moves smoothly when it is turned counterclockwise and it locks when it is turned clockwise.

Front Sun Gear Inspection

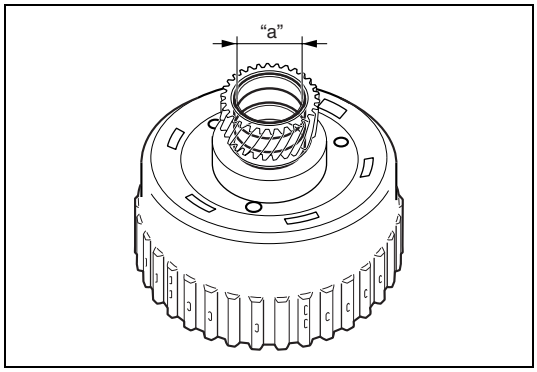

Measure inner diameter "a" of front sun gear bush. When measured value exceeds limit value, replace it.

Front sun gear bush bore
Limit "a": 26.69 mm (1.051 in.)

Rear Sun Gear Inspection

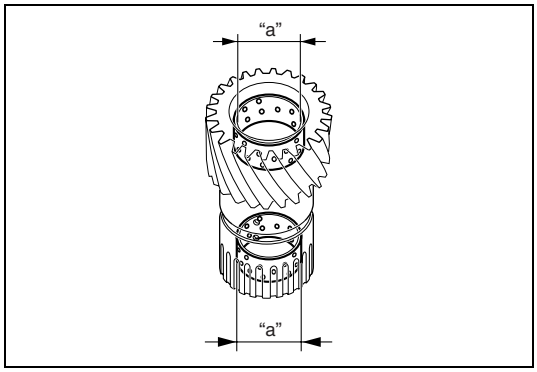

Measure inner diameters "a". When measured value exceeds limit value, replace it.

Front sun gear bush bore
Limit "a": 18.09 mm (0.712 in.)

Planetary Gear Assembly Inspection

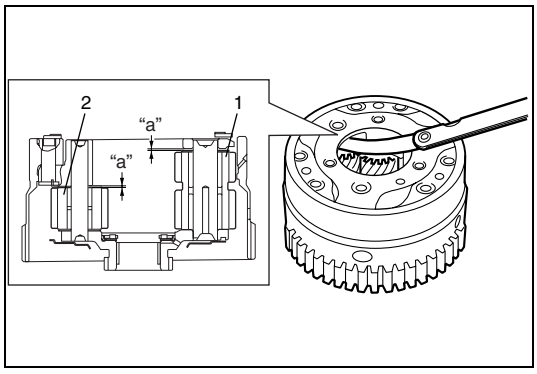

- Using thickness gauge, measure clearances "a" in thrust direction of long pinion gear (1) and short pinion gear (2). When measured value is out of specified value range, replace it.

Planetary gear thrust clearance
"a": 0.2 – 0.6 mm (0.08 – 0.024 in.)

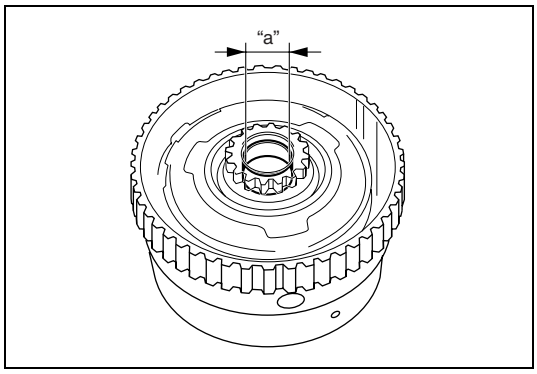

- Measure inner diameter "a" of planetary gear assembly bush. When measured value exceeds limit value, replace it.

Planetary gear bush bore
Limit "a": 18.09 mm (0.712 in.)

Transmission Case Inspection

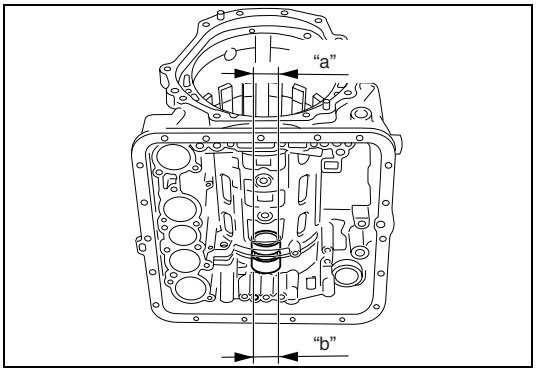

Measure inner diameters "a" and "b" of transmission case bush. When either measured value exceeds limit value, replace it.

Transmission case bush bore
Limit "a": 36.11 mm (1.422 in.)
"b": 35.40 mm (1.394 in.)

Tightening Torque Specification

Fastening part	Tightening torque		
	N•m	kg-m	lb-ft
A/T fluid drain plug	17	1.7	12.5
Select lever assembly mounting bolt	17.5	1.75	13.0
Manual selector rod nut	7	0.7	5.0
Transmission range sensor bolts	13	1.3	9.5
Output shaft speed sensor bolt	5.5	0.55	4.0
Input shaft speed sensor bolt	5.5	0.55	4.0
Solenoid valve bolts	11	1.1	8.0
Oil strainer bolts	10	1.0	7.5
Oil pan fixing bolts	11	1.1	8.0
Valve body harness connector fixing bolt	5.5	0.55	4.0
Engine rear mounting bracket bolts	25	2.5	18.0
Interlock cable screw	2.2	0.22	1.6
Automatic transmission mounting bolts	80	8.0	58.0
Drive plate to torque converter bolts	19	1.9	14.0
Drive plate bolts	69	6.9	50.0
Oil pump bolts	12	1.2	9.0
Torque converter housing bolt	25	2.5	18.0
Manual shift lever spring bolt	15	1.5	11.0
Parking lock pawl bracket bolt	8	0.8	6.0
Rear extension case bolt	25	2.5	18.0
Lock nut	7	0.7	5.0
Fluid cooler pipe bolt	6	0.6	4.5
Union bolt	28	2.8	20.5

Special Tool

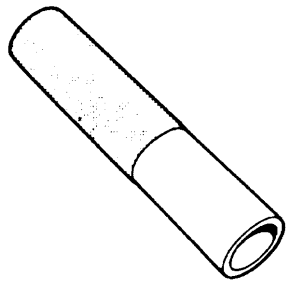 09913-84510 Bearing installer	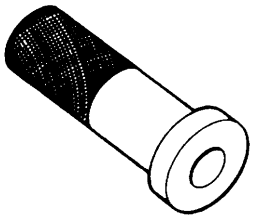 09913-85210 Bearing installer	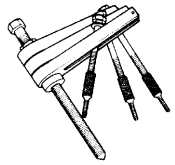 09920-13120 Crankcase separator	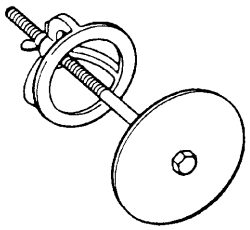 09922-86010 Clutch piston compressor
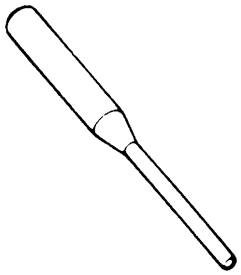 09922-89810 Shift lock pin remover (3.5 mm)	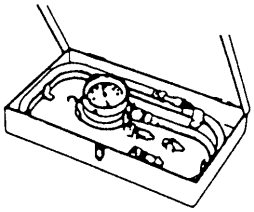 09925-37811-001 Oil pressure gauge	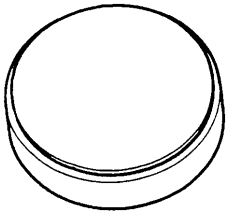 09925-86010 Bearing puller attachment	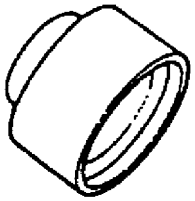 09926-26020 Oil seal installer
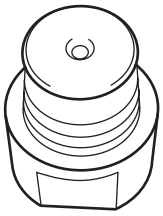 09926-26030 Air installer No.1	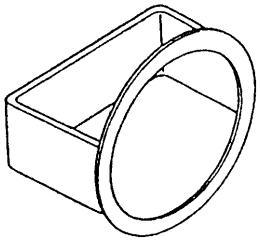 09926-96010 Clutch spring compressor	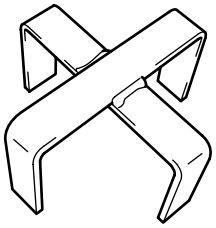 09926-96520 Spring compressor	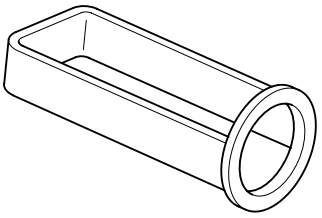 09926-97610 Spring compressor
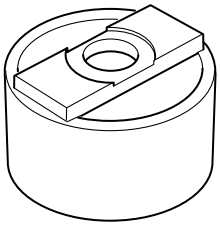 09927-66510 Spring compressor	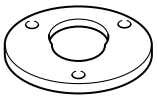 09927-66520 Oil pump remover	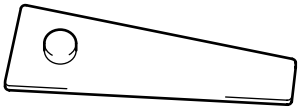 09952-06010 Dial gauge plate No.1	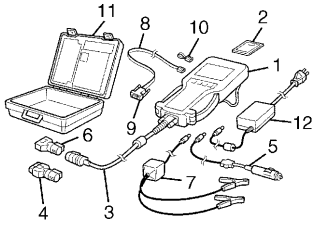 Tech 2 kit (SUZUKI scan tool) (See NOTE)

NOTE:

This kit includes the following items.

1. Tech 2, 2. PCMCIA card, 3. DLC cable, 4. SAE 16/19 adapter, 5. Cigarette cable, 6. DLC loopback, 7. Battery power cable, 8. RS232 cable, 9. RS232 adapter, 10. RS232 loopback connector, 11. Storage case, 12. Power supply

Required Service Material

Material	Recommended products (Part Number)	Use
Automatic transmission fluid	An equivalent of DEXRON®-III	• Automatic transmission • Parts lubrication when installing • O-rings
Sealant	SUZUKI BOND NO.1216B (99000-31230)	• Mating surface of torque converter housing • Mating surface of rear extension case
Lithium grease	SUZUKI SUPER GEASE C (99000-25030)	• Oil seal lips
	SUZUKI SUPER GEASE A (99000-25010)	• Manual selector lever pin • Converter center cup

SECTION 7C

CLUTCH
(M13 ENGINE MODEL)

NOTE:

For the items with asterisk (*) in the "CONTENTS" below, refer to the same section of the Service Manual mentioned in "FOREWORD" of this manual.

CONTENTS

General Description ..... 7C- *
Diagnosis ..... 7C- *
On-Vehicle Service 7C-2
Maintenance Service 7C-2
Clutch pedal height ..... 7C- *
Clutch pedal free travel ..... 7C- *
Clutch pedal switch 7C-2
Clutch cable routing ..... 7C- *
Clutch Cable ..... 7C- *
Unit Repair Overhaul ..... 7C- *
Clutch Cover, Clutch Disc, Flywheel and Release Bearing ..... 7C- *
Tightening Torque Specification 7C-3
Required Service Material ..... 7C- *
Special Tool ..... 7C- *

On-Vehicle Service

Maintenance Service

Clutch pedal switch

Removal

1) Disconnect clutch pedal switch (1) connector with ignition switch OFF.

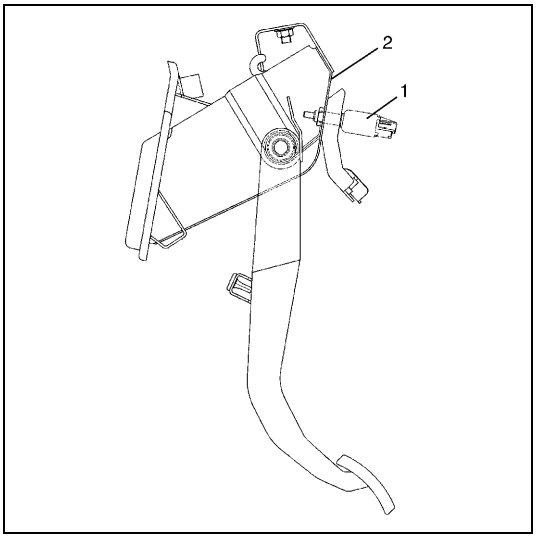

2) Remove clutch pedal switch (1) from pedal bracket (2).

Inspection

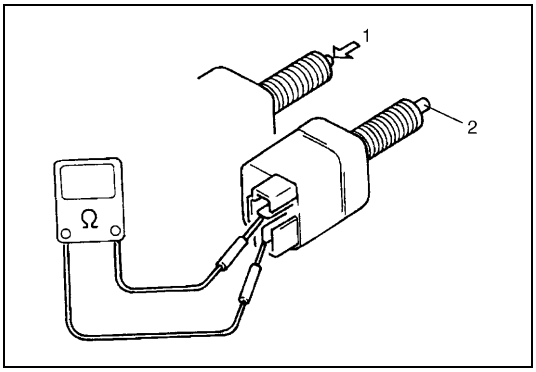

Check for resistance between terminals under each condition in the following.
If check result is not satisfactory, replace.

Clutch pedal switch resistance
When switch shaft is pushed (1): Continuity
When switch shaft is free (2): No Continuity

Installation

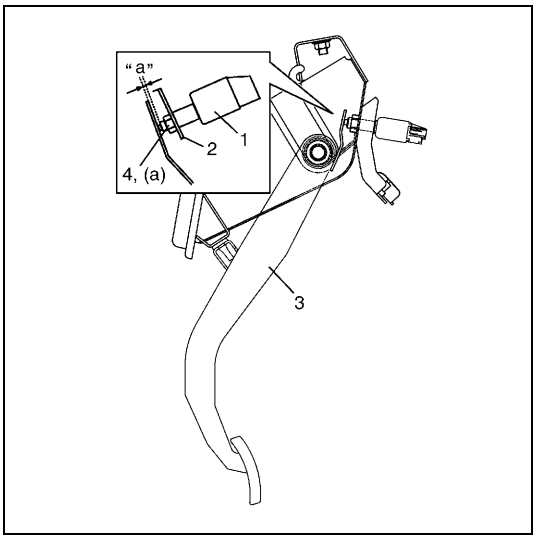

1) Install clutch pedal switch (1) to pedal bracket (2).
2) Depress clutch pedal (3).
3) Adjust switch position so that clearance between end of thread and clutch pedal bracket is within specification.

Clearance "a" between end of thread and clutch pedal bracket
6.3 – 6.8 mm (0.25 – 0.27 in.)

4) Tighten lock nut (4) to specified torque.

Tightening torque
Clutch pedal switch lock nut (a):
7.5 N·m (0.75 kg-m, 5.5 lb-ft)

5) Connect connector to clutch pedal switch (1) securely.

Tightening Torque Specification

Be sure to torque each nut or bolt, if loosened, to specification given below. If specified tightening torque for particular bolt or nut is not included here, refer to Section 0A of this manual.

Fastening part	Tightening torque		
	N•m	kg-m	lb-ft
Flywheel bolts	76	7.6	55.0
Clutch cover bolts	23	2.3	17.0
Clutch release fork support	29	2.9	21.0
Clutch pedal switch lock nut	7.5	0.75	5.5

SECTION 7C2

CLUTCH (K9K ENGINE MODEL)

NOTE:

For the items with asterisk (*) in the "CONTENTS" below, refer to the same section of the Service Manual mentioned in "FOREWORD" of this manual.

CONTENTS

General Description ..... 7C2- *
Diagnosis ..... 7C2- *
Diagnosis Table ..... 7C2- *
Clutch Pedal Inspection ..... 7C2- *
Clutch Fluid Level Check ..... 7C2- *
On-Vehicle Service 7C2-2
Clutch Fluid Pipe and Hose Components ..... 7C2- *
Clutch Fluid Pipe and Hose Removal and Installation ..... 7C2- *
Clutch Fluid Pipe and Hose Inspection ..... 7C2- *
Clutch Master Cylinder Removal and Installation ..... 7C2- *
Clutch Operating Cylinder Removal and Installation ..... 7C2- *
Clutch Pedal Switch Removal and Installation 7C2-2
Clutch Pedal Switch Inspection 7C2-2
Unit Repair Overhaul 7C2-2
Clutch Master Cylinder Components ..... 7C2- *
Clutch Master Cylinder Disassembly and Assembly ..... 7C2- *
Clutch Master Cylinder Inspection ..... 7C2- *
Clutch Operating Cylinder Components ... 7C2- *
Clutch Operating Cylinder Disassembly and Assembly ..... 7C2- *
Clutch Operating Cylinder Inspection ..... 7C2- *
Clutch Pedal and Clutch Pedal Bracket Components 7C2-2
Release Bearing Components ..... 7C2- *
Clutch Cover, Clutch Disc, Flywheel and Release Bearing Removal and Installation ..... 7C2- *
Clutch Cover, Clutch Disc, Flywheel and Release Bearing Inspection ..... 7C2- *
Tightening Torque Specification 7C2-3
Required Service Material ..... 7C2- *
Special Tool ..... 7C2- *

On-Vehicle Service

Clutch Pedal Switch Removal and Installation

Refer to “Clutch Pedal Switch” in Section 7C.

Clutch Pedal Switch Inspection

Refer to “Clutch Pedal Switch” in Section 7C.

Unit Repair Overhaul

Clutch Pedal and Clutch Pedal Bracket Components

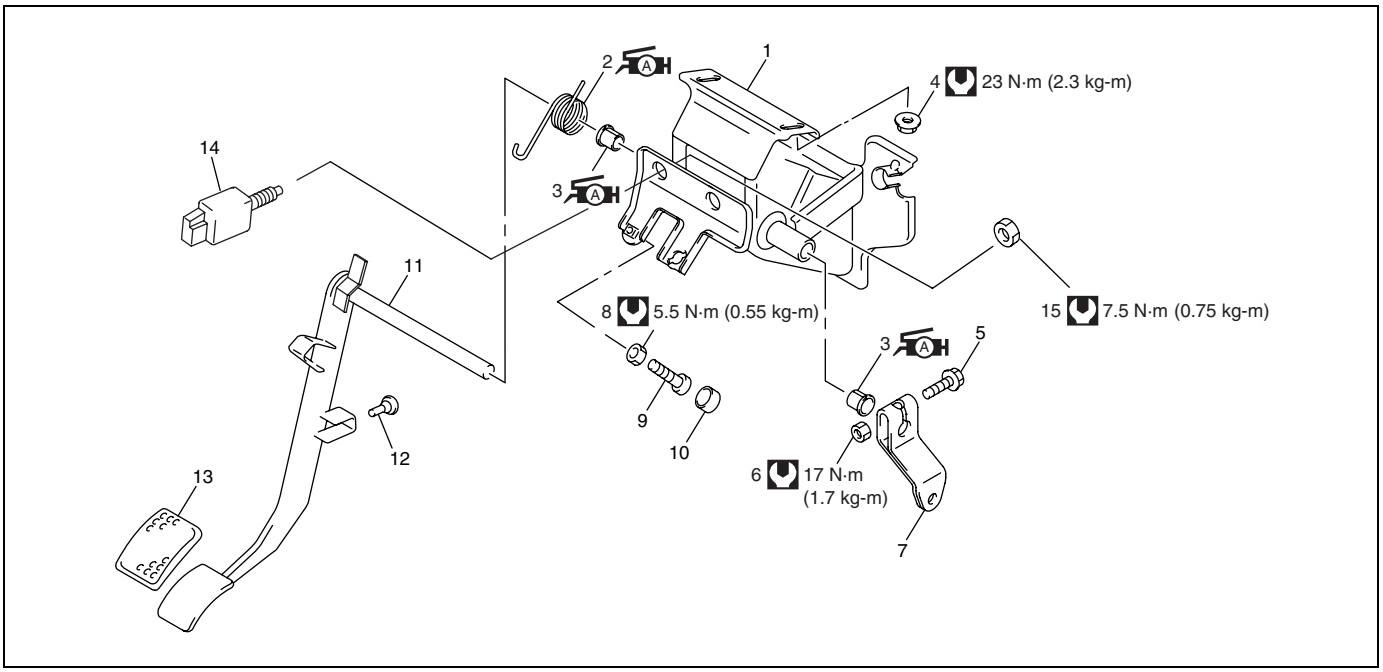

	1. Pedal bracket	7. Clutch pedal lever	13. Pedal pad
A H	2. Clutch pedal spring : Apply grease 99000-25010 to spring inside.	8. Clutch pedal free height nut	14. Clutch pedal switch
A H	3. Clutch bush : Apply grease 99000-25010 to bush all surface.	9. Clutch pedal free height bolt	15. Clutch pedal switch locknut
	4. Bracket nut	10 Clutch pedal return cushion	Tightening torque
	5. Clutch pedal shaft arm bolt	11. Clutch pedal	
	6. Clutch pedal shaft arm nut	12. Clutch pedal stop cushion	

Tightening Torque Specification

Fastening part	Tightening torque		
	N•m	kg-m	lb-ft
Flywheel bolt	53	5.3	38.5
Clutch cover bolt	15	1.5	11.0
Clutch pipe flare nut	16	1.6	11.5
Union bolt	23	2.3	17.0
Clutch master cylinder nut and bolt	13	1.3	9.5
Clutch pipe flare nut	16	1.6	11.5
Clutch operating cylinder bolt	50	5.0	36.5
Pedal bracket nut	23	2.3	17.0
Clutch pedal shaft arm nut	17	1.7	12.5
Brake master cylinder nut	13	1.3	9.5
Bracket nut	23	2.3	17.0
Clutch pedal free height nut	5.5	0.55	4.0
Clutch pedal switch lock nut	7.5	0.75	5.5

SECTION 7D

TRANSFER

WARNING:

For vehicles equipped with a Supplemental Restraint (Air Bag) System:

- **Service on and around the air bag system components or wiring must be performed only by an authorized SUZUKI dealer. Refer to "Air Bag System Components and Wiring Location View" under "General Description" in air bag system section in order to confirm whether you are performing service on or near the air bag system components or wiring. Please observe all WARNINGS and "Service Precautions" under "On-Vehicle Service" in air bag system section before performing service on or around the air bag system components or wiring. Failure to follow WARNINGS could result in unintentional activation of the system or could render the system inoperative. Either of these two conditions may result in severe injury.**
- **Technical service work must be started at least 90 seconds after the ignition switch is turned to the "LOCK" position and the negative cable is disconnected from the battery. Otherwise, the system may be activated by reserve energy in the Sensing and Diagnostic Module (SDM).**

CONTENTS

General Description 7D-3
- Transfer Description 7D-3
- Transfer Control System Description (Motor-Shift Type) 7D-3
- Transfer Control System Components 7D-4
- Function of Transfer Control System Component 7D-5
- Transfer Cross Section Diagram 7D-6
- Transfer Control System Description 7D-7
  - Indicator and warning buzzer operation 7D-8
- Transfer Control System Operation 7D-9
- Limited Shift Operation 7D-17
- Transfer Control System Wiring Circuit Diagram 7D-18
- Terminal Arrangement of Transfer Control Module 7D-19
- Input / Output Signal Table of Transfer Control Module 7D-19

Diagnosis 7D-20
- Transfer Diagnostic Flow Table 7D-20
- Detail of Transfer Diagnostic Flow Table 7D-21
- Transfer Control System Operation Inspection 7D-22
- Visual Inspection 7D-24
- Transfer System Symptom Diagnosis 7D-24
- Table A: 4WD Indicator and/or 4WD Low Indicator Does Not Come ON at Ignition Switch ON 7D-27
- Table B: 4WD Indicator and/or 4WD Low Indicator Come ON Steady 7D-30
- Table C: 4WD Indicator Flushes at Intervals of 0.5 Seconds Continuously 7D-32
- Table D: 4WD Indicator and 4WD Low Indicator Flashes at Intervals of 0.2 Seconds 7D-33
- Inspection of Transfer Control Module and Its Circuits 7D-36

On-Vehicle Service 7D-40
- Transfer Gear Oil Change 7D-40
- 4WD Switch and 4WD Low Switch Removal and Installation 7D-41
- 4WD Switch and 4WD Low Switch Inspection 7D-41
- 2WD/4WD Switch Removal and Installation 7D-42
- 2WD/4WD Switch Inspection 7D-42
- VSS Removal and Installation 7D-43
- Transfer Assembly Mounting Components 7D-44
- Transfer Assembly Dismounting and Remounting 7D-45

Unit Repair Overhaul 7D-46
- Transfer Unit Components 7D-46
  - Transfer case component 7D-46
  - Transfer gear component 7D-47
  - Transfer shift shaft component 7D-48
- Transfer Unit Disassembly and Reassembly 7D-49
- Transfer Shift Actuator Inspection 7D-57
- Transfer Inspection 7D-58

Front Case Assembly Disassembly and Reassembly 7D-58
Rear Case Assembly Disassembly and Reassembly 7D-60
Transfer Input Shaft Assembly Disassembly and Reassembly 7D-62
Transfer Counter Gear Assembly Disassembly and Reassembly 7D-62
Shift Fork Shaft Assembly Disassembly and Reassembly 7D-63
Shift Fork Shaft Assembly Inspection 7D-63
Transfer Output Rear Shaft Assembly Disassembly and Reassembly 7D-64
Transfer Output Front Shaft Assembly Disassembly and Reassembly 7D-65
Output Shaft Snap Ring Adjustment 7D-66
Special Tool 7D-67
Tightening Torque Specification 7D-68
Required Service Material 7D-68

General Description

Transfer Description

The aluminum transfer case directly connected to the back of the transmission contains input shaft, counter gear, output rear shaft, output front shaft, drive chain, shift fork shaft No.1, shift fork shaft No.2 and their accompanying gears, hubs, sleeves, synchronizer ring, fork, etc.

With a synchronizer installed to the front drive clutch hub sleeve, it is possible to change the shift position between the 2H position and the 4H position even while running.
The front drive gear shift fork has a shift fork spring to make a smooth shift between the 4H position and the 2H position.

The case has an oil receiver and an oil protect plate to provide proper lubrication even under the severe conditions of use.

Transfer Control System Description (Motor-Shift Type)

Instead of the transfer shift lever, the transfer position (2H, 4H and 4L) is shifted automatically by operating the “2WD” switch, “4WD” switch and “4WD-L” switch. The transfer control module operates the transfer shift actuator according to the “2WD” switch, “4WD” switch and “4WD-L” switch operation. Also, the transfer control system has 4WD indicator, 4WD low indicator and warning buzzer in order to inform the transfer control system condition.

Transfer Control System Components

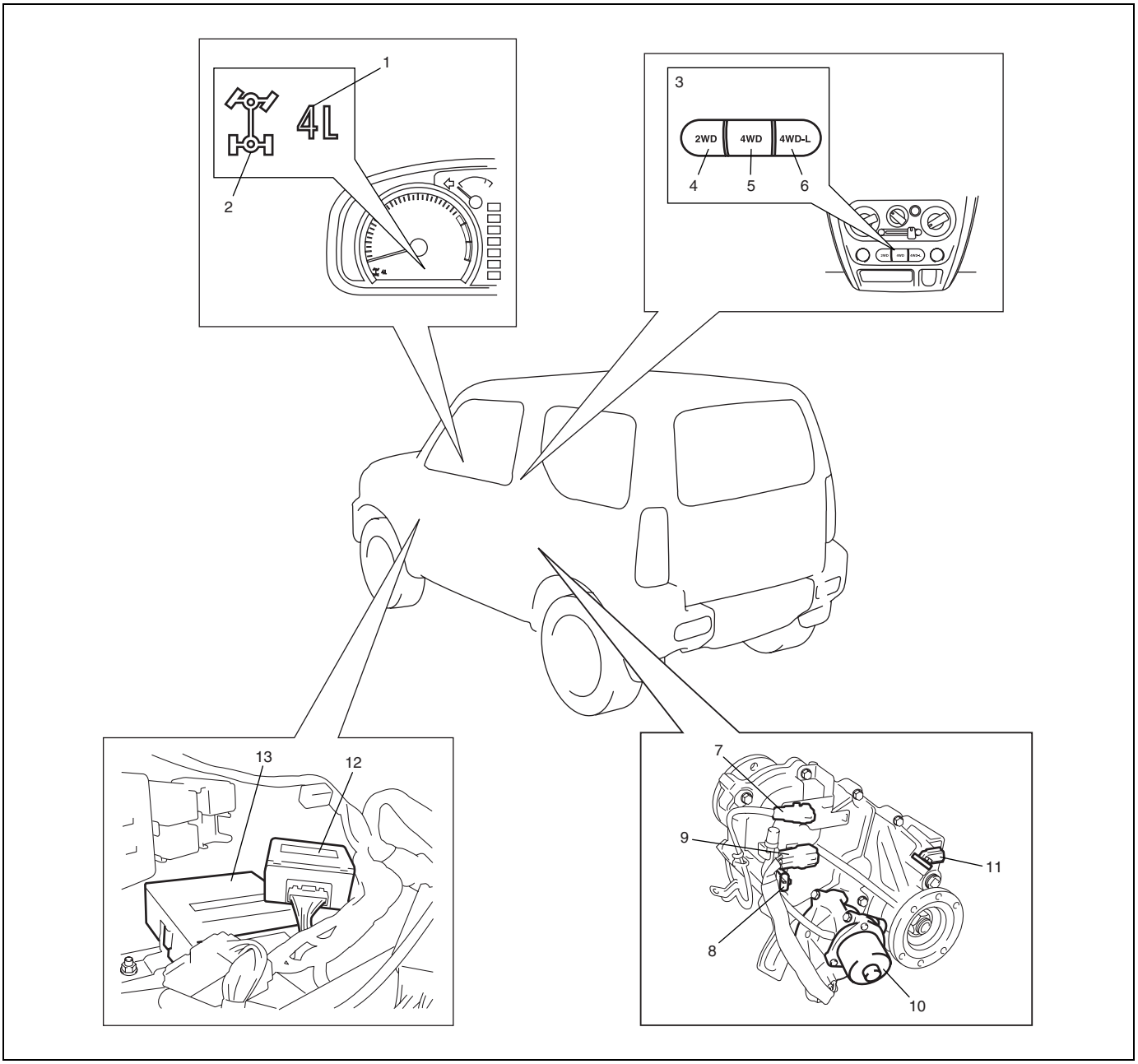

1. 4WD low indicator	6. “4WD-L” switch	11. VSS
2. 4WD indicator	7. 4WD switch connector	12. 4WD controller
3. 2WD/4WD switch	8. 4WD low switch connector	13. Transfer control module
4. “2WD” switch	9. Transfer shift actuator connector	
5. “4WD” switch	10. Transfer shift actuator motor	

Function of Transfer Control System Component

Part Name	Function
4WD switch	Detects whether transfer shift fork shaft No.1 is at 2H or 4H/4L.
4WD low switch	Detects whether transfer shift fork shaft No.1 is at 2H/4H or 4L.
2WD/4WD switch	• Shifts transfer shift position. • Consists of “2WD” switch, “4WD” switch and “4WD-L” switch.
“2WD” switch	Shifts transfer from 4H to 2H.
“4WD” switch	Shifts transfer from 2H to 4H or from 4L to 4H.
“4WD-L” switch	Shifts transfer from 4H to 4L.
4WD indicator	• Indicates whether transfer is at 4H/4L position or not. • Informs what state transfer control system is.
4WD low indicator	• Indicates whether transfer is at 4L position or not. • Informs what state transfer control system is.
A/T shift switch (N position) (for A/T model)	Detects whether A/T is at N range or not.
Clutch pedal switch	Detects whether clutch pedal is depressed or not.
Warning buzzer	Warns what state transfer control system is.
Transfer control module	• Controls transfer shifting. • Operates 4WD indicator, 4WD low indicator and warning buzzer. • Diagnoses 4WD switch, 4WD low switch and transfer shift actuator limit switch.
Transfer shift actuator	Consists of transfer shift actuator motor and transfer shift actuator limit switch.
Transfer shift actuator motor	Shifts transfer shift position by operating shift fork shaft No.1 through pinion gear.
Transfer shift actuator limit switch	Detects whether transfer shift actuator motor position.

Transfer Cross Section Diagram

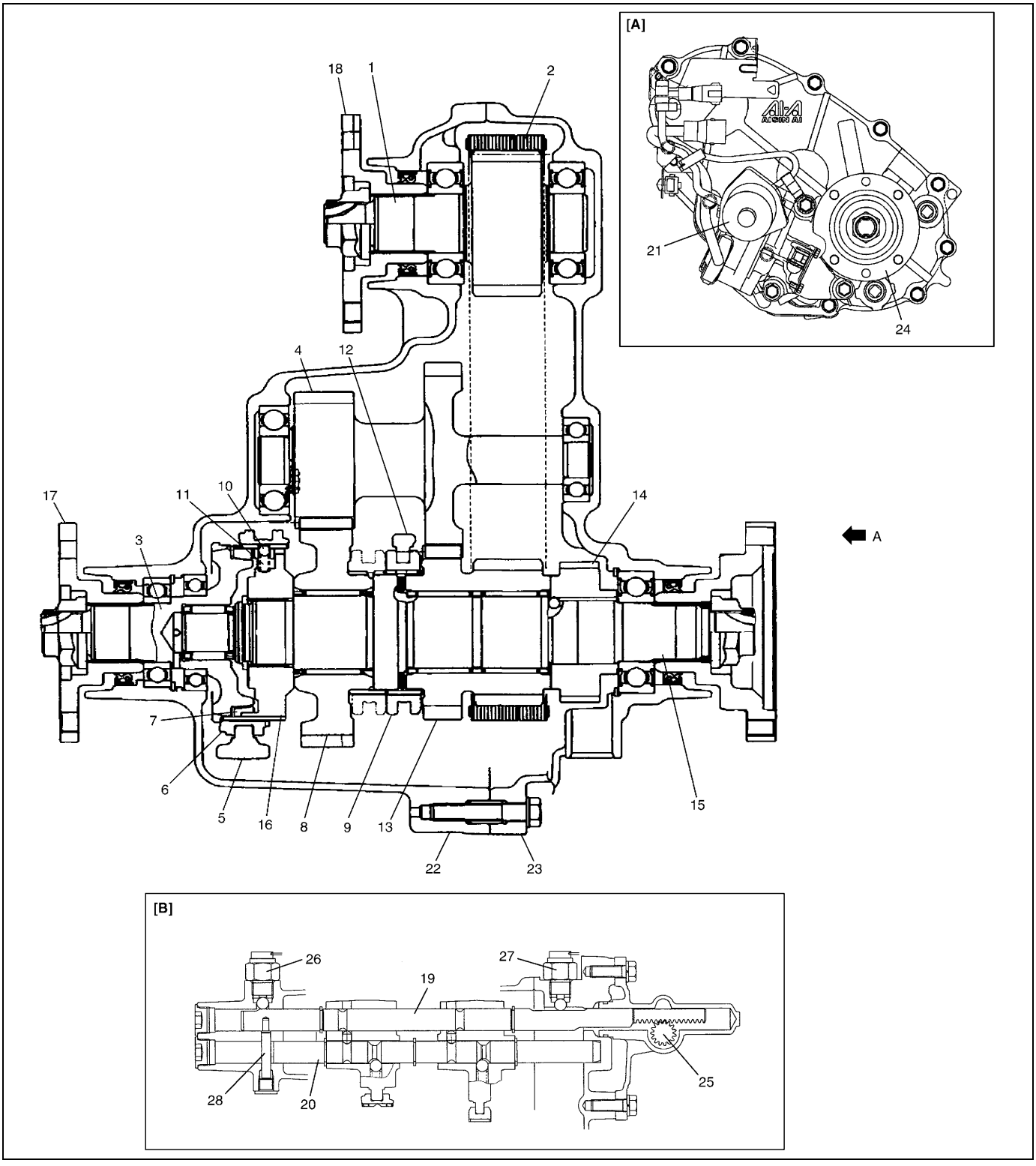

[A]: View A	9. Reduction clutch sleeve	19. Shift fork shaft No.1
[B]: Shift fork shaft cross section	10. Steel ball	20. Shift fork shaft No.2
1. Input shaft	11. Key spring	21. Transfer shift actuator
2. Drive chain	12. High & low shift fork	22. Front case
3. Output front shaft	13. Sprocket output gear	23. Rear case
4. Counter gear	14. VSS rotor	24. Output rear flange
5. Front drive gear shift fork	15. Output rear shaft	25. Pinion gear
6. Front drive clutch hub sleeve	16. Front drive clutch hub	26. 4WD switch
7. Synchronizer ring	17. Output front flange	27. 4WD low switch
8. Output low gear	18. Input front flange	28. Straight pin

Transfer Control System Description

The transfer control module shifts the transfer to the selected shift position (2H, 4H, or 4L) according to the signal from the “2WD” switch, “4WD” switch or “4WD-L” switch.
The transfer controls the transfer shift actuator in order to operate the shift fork shaft No.1. The transfer control module detects the position of the transfer shift actuator motor by the signal from the transfer shift actuator limit switch.
Also, the transfer control module detects each position (2H, 4H, or 4L) of the shift fork shaft No.1 installed to the transfer assembly by the signals from the 4WD switch and the 4WD low switch as follows.

Relationship of transfer shift position and switch

Switch	Transfer shift position		
	2H	4H	4L
4WD switch	OFF	ON	ON
4WD low switch	OFF	OFF	ON

When the transfer shift actuator motor position detected by the limit switch matches the shift fork shaft No.1 position detected by the switches above-mentioned, the transfer control module judges that the transfer shifting is completed.
And, the transfer control module has the following operations to inform the state of the transfer and to assure the safe driveability even when the transfer control module detects failure of the transfer control system or the 4WD control system.

- Indicator and buzzer operation
- Limited shift operation

Indicator and warning buzzer operation

The transfer control module operates the 4WD indicator, the 4WD low indicator and the warning buzzer as follows in order to inform what state the transfer control system is.

NOTE:

- **The operations with asterisk (*) in the table below, indicate malfunction flashing. The transfer control module detects the malfunction in the transfer control system. Check and repair transfer control system referring to the applicable trouble shooting as follows.**
  - **– "Table-C: 4WD Indicator Flashes at Intervals of 0.5 Seconds Continuously" in this section**
  - **– "Table-D: 4WD Indicator and 4WD Low Indicator Flashes at Intervals of 0.2 Seconds" in this section**
- **For the conditions with asterisk (**) in the table below, the transfer control system is in the limited shift operation. For the details of limited shift operation, refer to "Limited Shift Operation" in this section.**

Operation			Condition
Indicator		Warning Buzzer	
4WD indicator	OFF	–	• Ignition switch is OFF. • Transfer is at 2H (air locking hub is unlocked).
	ON	–	• Within 2 seconds after ignition switch is turned ON. (checking indicator operation) • Transfer is at 4H/4L (air locking hub is locked).
	Flashes at intervals of 0.5 seconds for approx. 3 seconds	–	• Transfer is shifting from 2H to 4H. • Transfer is shifting from 4H to 2H. • Transfer could not complete shifting to 2H (or 4H) and shift position is returning to 4H (or 2H)**.
	Flashes at intervals of 0.5 seconds continuously*	–	4WD controller detects malfunction of 4WD control system.
	Flashes at intervals of 0.2 seconds*	–	Transfer control module detects malfunction of transfer shift actuator limit switch during shift operation**.
	Flashes at intervals of 0.5 seconds	Sounds 3 times	• "2WD" switch operates at 100 km/h (62 mile/h) or more when transfer is at 4H**. • "4WD" switch operates at 100 km/h (62 mile/h) or more when transfer is at 2H**.
4WD low indicator	OFF	–	• Ignition switch is OFF. • Transfer is at 2H/4H. (4WD low switch is OFF.)
	ON	–	• Within 2 seconds after ignition switch is turned ON. (checking indicator operation) • Transfer is at 4L. (4WD low switch is ON.)
	Flashes at intervals of 0.5 seconds	Sounds continuously	• Transfer is shifting from 4H to 4L. • Transfer is shifting from 4L to 4H. • Transfer is shifting to shift position detected by 4WD low switch**.
	Flashes at intervals of 0.2 seconds*	–	• Transfer control module detects mismatching between signals from transfer shift actuator limit switch and 4WD/4WD low switches when ignition switch is turned ON**. • Transfer control module detects malfunction of transfer shift actuator limit switch during shift operation**.

Operation		Warning Buzzer	Condition
Indicator			
4WD low indicator	Flashes at intervals of 0.5 seconds	Sounds 3 times	• "4WD" switch operates at 5 km/h (3 mile/h) or more when transfer is at 4L**. • "4WD-L" switch operates at 5 km/h (3 mile/h) or more when transfer is at 4H**. • Vehicle speed rises by 5 km/h (3 mile/h) or more during shifting from 4H to 4L or from 4L to 4H**. • A/T select lever shifts to other than "N" range or clutch pedal is released during shifting from 4H to 4L or from 4L to 4H. • "4WD" switch is pushed when transfer is at 4L and A/T is at other than "N" range or clutch pedal is released. • "4WD-L" switch is pushed when transfer is at 4H and A/T is at other than "N" range or clutch pedal is released.
–	–	Sound 3 times	• "2WD" switch is pushed when transfer is at 4L • "4WD-L" switch is pushed when transfer is at 2H.

Transfer Control System Operation

Shift Operation from 2H to 4H

When "4WD" switch is pushed at 2H, the transfer control module shifts the transfer to 4H as follows.
The transfer control module flashes the 4WD indicator and runs the transfer shift control actuator motor. The transfer shift actuator motor shifts the shift fork shaft No.1 via the pinion gear until the 4WD switch is turned ON. And, the 4WD controller locks the air locking hub and turns ON the 4WD indicator via the transfer control module. If the transfer control module does not detect the ON signal from the 4WD switch for 3 seconds after starting the shift operation, the transfer control module returns the transfer shift actuator motor to the 2H position.
Also, the shift fork shaft No.1 shifts the front drive gear shift fork, and then the front drive clutch hub and the output front shaft are engaged via front drive clutch hub sleeve.
At this time, the driving force from the input shaft is transmitted to the transfer output front shaft and output rear shaft.

However, the shift operation will not be performed under the following condition.

- The transfer shift actuator limit switch detects other than the 2H position before starting the shift operation.
- The vehicle speed is more than 100 km/h (62 mile/h) before starting the shift operation.

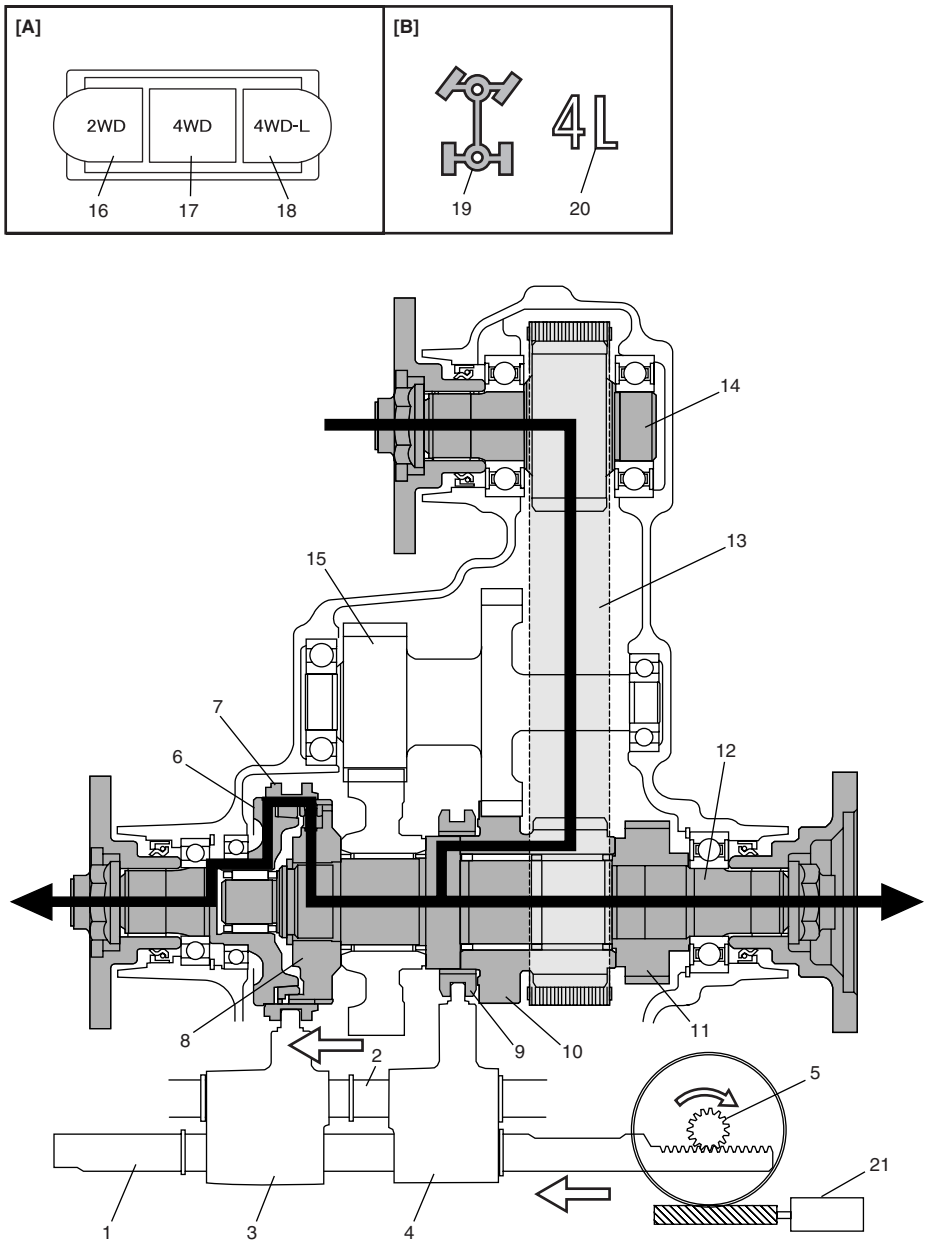

[A]: 2WD/4WD switch	7. Front drive clutch hub sleeve	15. Counter gear
[B]: Indicator	8. Front drive clutch hub	16. “2WD” switch
1. Shift fork shaft No.1	9. Reduction clutch sleeve	17. “4WD” switch
2. Shift fork shaft No.2	10. Sprocket output gear	18. “4WD-L” switch
3. Front drive gear shift fork	11. VSS rotor	19. 4WD indicator
4. High & low shift fork	12. Output rear shaft	20. 4WD low indicator
5. Pinion gear	13. Drive chain	21. Transfer shift actuator motor
6. Output front shaft	14. Input shaft	

Shift Operation from 4H to 4L

When “4WD-L” switch is pushed at 4H, the transfer control module shifts the transfer to 4L as follows.
The transfer control module flashes the 4WD low indicator and runs the transfer shift control actuator motor until the transfer shift actuator limit switch is at the 4L position.
The transfer shift actuator motor shifts the shift fork shaft No.1 via the pinion gear. And, if it is difficult to shift the shift fork shaft No.1 to the 4L position, the transfer actuator keeps the shift operation by the spring included in the transfer shift actuator.
When the transfer shift actuator shifts the shift fork shaft No.1 to the 4L position, the 4WD low switch is turned ON and the transfer control module turns ON the 4WD low indicator.
Also, the shift fork shaft No.1 shifts the high & low shift fork, and then the output low gear and the output rear shaft are engaged via the reduction clutch sleeve.
At this time, the driving force from the input shaft is transmitted to the transfer output front shaft and the output rear shaft through the counter gear at a reduced speed.

However, the shift operation will not be performed under the following conditions.

- The transfer shift actuator limit switch detects other than the 4H position before starting the shift operation.
- The vehicle speed is more than 5 km/h (3 mile/h) before stopping the transfer shift actuator motor.
- The A/T select lever is shifted from “N” range or the clutch pedal is released before stopping the transfer shift actuator motor.

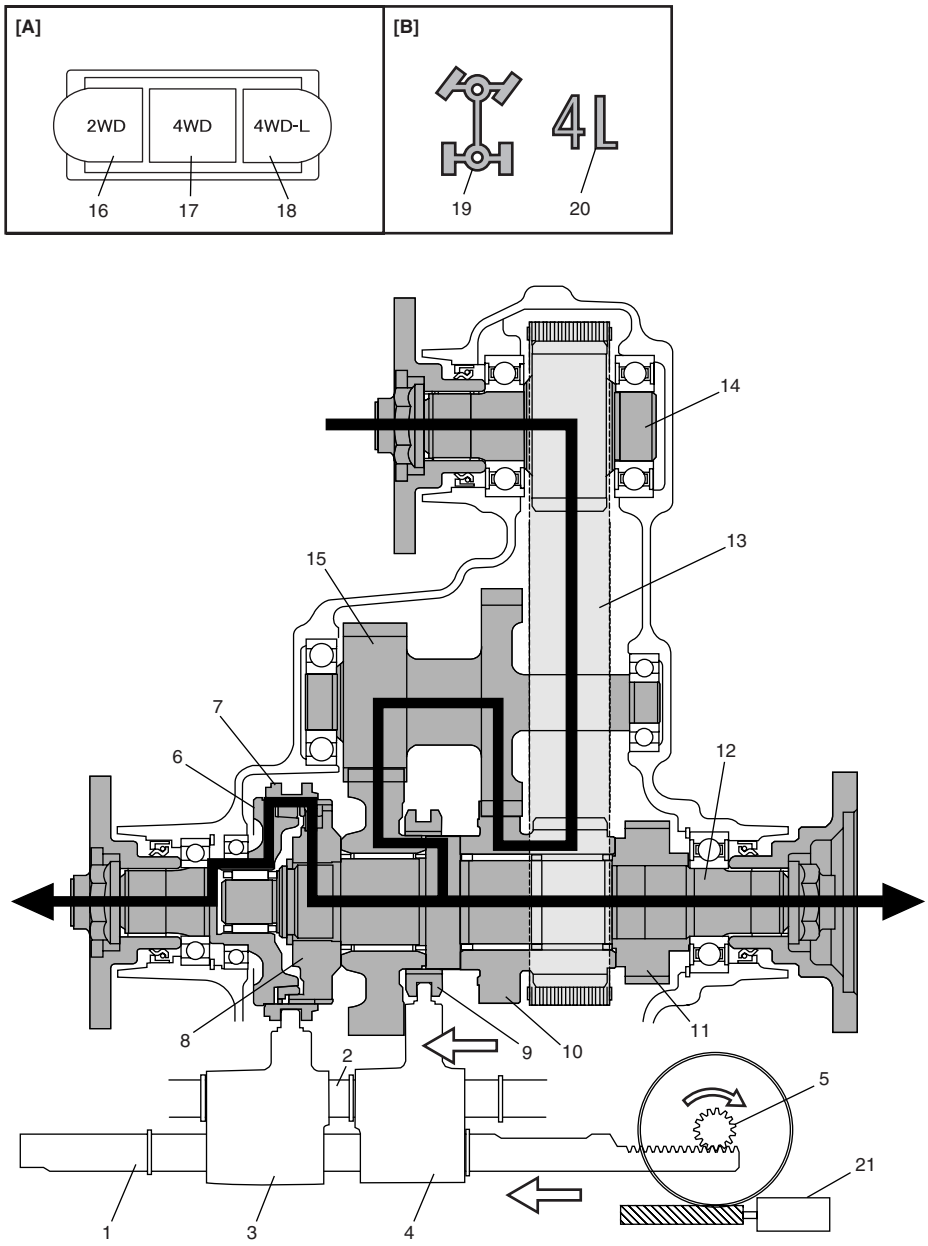

[A]: 2WD/4WD switch	7. Front drive clutch hub sleeve	15. Counter gear
[B]: Indicator	8. Front drive clutch hub	16. “2WD” switch
1. Shift fork shaft No.1	9. Reduction clutch sleeve	17. “4WD” switch
2. Shift fork shaft No.2	10. Sprocket output gear	18. “4WD-L” switch
3. Front drive gear shift fork	11. VSS rotor	19. 4WD indicator
4. High & low shift fork	12. Output rear shaft	20. 4WD low indicator
5. Pinion gear	13. Drive chain	21. Transfer shift actuator motor
6. Output front shaft	14. Input shaft	

Shift Operation from 4L to 4H

When “4WD” switch is pushed at 4L, the transfer control module shifts the transfer to 4H as follows.
The transfer control module flashes the 4WD low indicator and runs the transfer shift control actuator motor until the transfer shift actuator limit switch is at the 4H position.
The transfer shift actuator motor shifts the shift fork shaft No.1 via the pinion gear. And, if it is difficult to shift the shift fork shaft No.1 to the 4H position, the transfer actuator keeps the shift operation by the spring included in the transfer shift actuator.
When the transfer shift actuator shifts the fork shaft No.1 to the 4H position, the 4WD low switch is turned OFF and the transfer control module turns OFF the 4WD low indicator.
Also, the shift fork shaft No.1 shifts the high & low shift fork, and then the output low gear and the output rear shaft are disengaged via the reduction clutch sleeve.
At this time, the driving force from the input shaft is transmitted to the transfer output front shaft and the output rear shaft without speed reduction.

However, the shift operation will not be performed under the following conditions.

- The transfer shift actuator limit switch detects other than the 4L position before starting the shift operation.
- The vehicle speed is more than 5 km/h (3 mile/h) before stopping the transfer shift actuator motor.
- The A/T select lever is shifted from “N” range or the clutch pedal is released before stopping the transfer shift actuator motor.

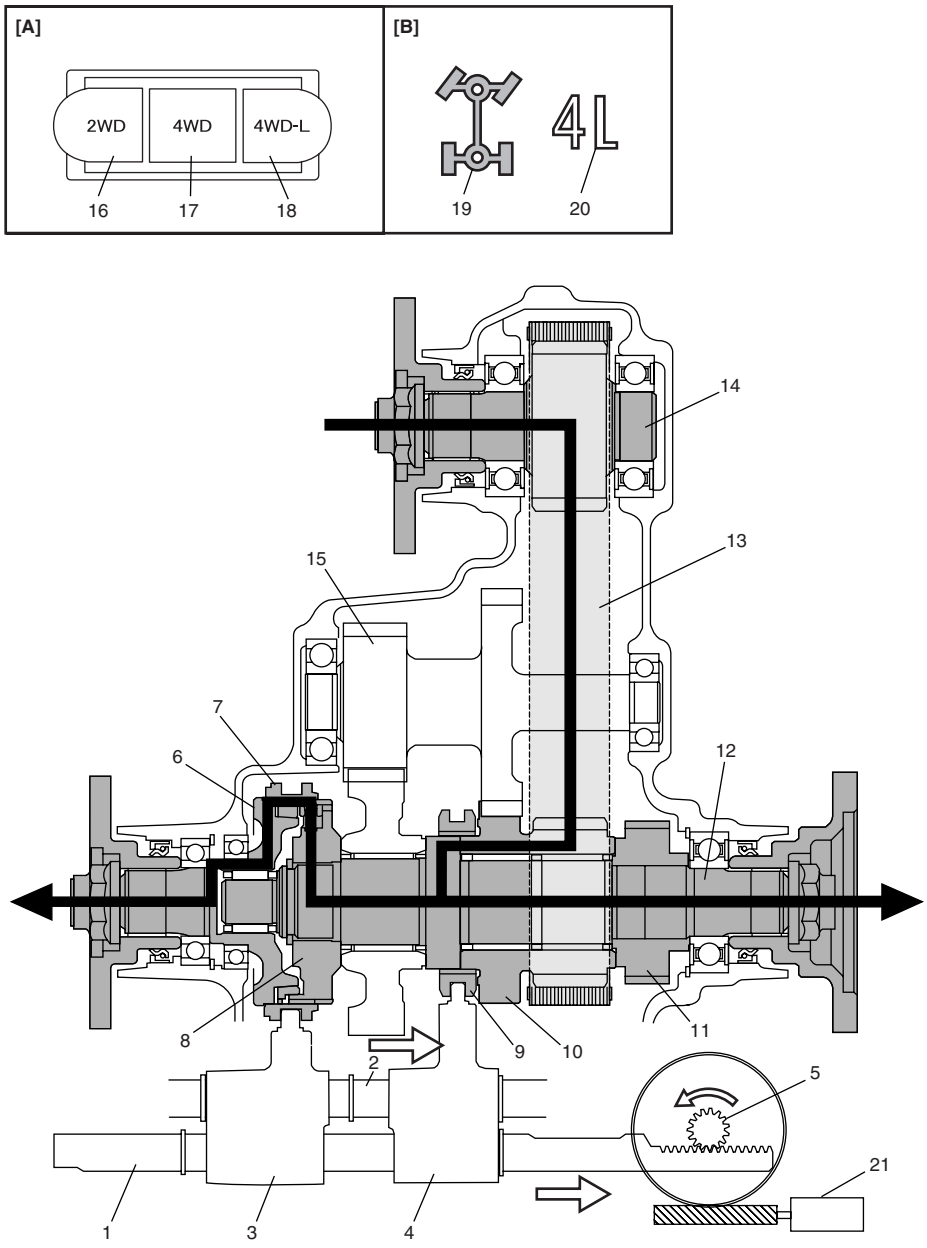

[A]: 2WD/4WD switch	7. Front drive clutch hub sleeve	15. Counter gear
[B]: Indicator	8. Front drive clutch hub	16. “2WD” switch
1. Shift fork shaft No.1	9. Reduction clutch sleeve	17. “4WD” switch
2. Shift fork shaft No.2	10. Sprocket output gear	18. “4WD-L” switch
3. Front drive gear shift fork	11. VSS rotor	19. 4WD indicator
4. High & low shift fork	12. Output rear shaft	20. 4WD low indicator
5. Pinion gear	13. Drive chain	21. Transfer shift actuator motor
6. Output front shaft	14. Input shaft	

Shift Operation from 4H to 2H

When “2WD” switch is pushed at 4H, the transfer control module shifts the transfer to 2H as follows.
The transfer control module flashes the 4WD indicator and runs the transfer shift control actuator motor until the transfer shift actuator limit switch is at the 2H position. If the transfer control module does not detect the 2H position signal from the transfer shift actuator limit switch for 3 seconds after starting the shift operation, the transfer control module returns the transfer shift actuator motor to the 4H position.
The transfer shift actuator motor shifts the shift fork shaft No.1 via the pinion gear. And, if it is difficult to shift to the 2H position, the transfer actuator keeps the shift operation by the spring included in the transfer shift actuator.
When the transfer shift actuator shifts the shift fork shaft No.1 to the 2H position, the 4WD switch is turned OFF. And, the 4WD controller unlocks the air locking hub and turns OFF the 4WD indicator via the transfer control module.
Also, the shift fork shaft No.1 shifts the front drive gear shift fork, and then the front drive clutch hub and the output front shaft are disengaged via front drive clutch hub sleeve.
At this time, the driving force from the input shaft is only transmitted to the transfer output front shaft.

However, the shift operation will not be performed under the following condition.

- The transfer shift actuator limit switch detects other than the 2H position before starting the shift operation.

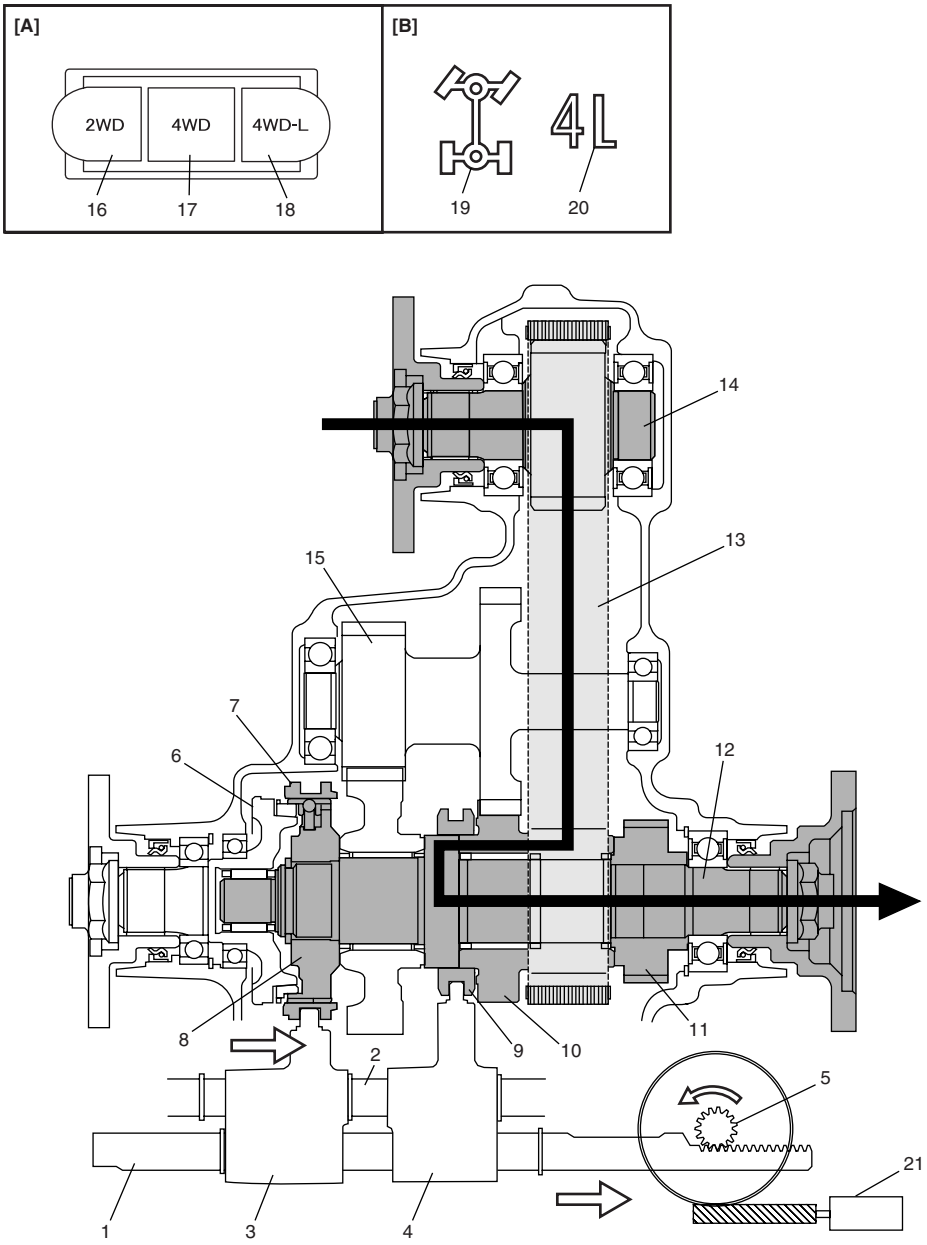

[A]: 2WD/4WD switch	7. Front drive clutch hub sleeve	15. Counter gear
[B]: Indicator	8. Front drive clutch hub	16. “2WD” switch
1. Shift fork shaft No.1	9. Reduction clutch sleeve	17. “4WD” switch
2. Shift fork shaft No.2	10. Sprocket output gear	18. “4WD-L” switch
3. Front drive gear shift fork	11. VSS rotor	19. 4WD indicator
4. High & low shift fork	12. Output rear shaft	20. 4WD low indicator
5. Pinion gear	13. Drive chain	21. Transfer shift actuator motor
6. Output front shaft	14. Input shaft	

Limited Shift Operation

When the transfer control module detects the following condition in the transfer control system, the transfer control module limits the transfer shift operation as follows, and the limitation can be canceled by turning ignition switch to “OFF” position.

	Condition	Limited shift operation	Indicator and/or warning buzzer operation
Abnormal shift position limitation	Detects malfunction of transfer shift actuator limit switch when operating 2WD/4WD switch.	Cancels transfer shift actuator motor operation.	4WD indicator and 4WD low indicator flashes at intervals of 0.2 seconds.
Transmission range limitation	• Detects A/T shift range is at other than “N” range or clutch pedal is released when operating “4WD” switch with transfer is at 4L. • Detects A/T shift range is at other than “N” range or clutch pedal is released when operating “4WD-L” switch with transfer is at 4H.	Cancels transfer shift actuator motor operation.	• 4WD low indicator flashes at intervals of 0.5 seconds. • Warning buzzer sounds 3 times.
	Detects A/T shift range shifts at other than “N” range or clutch pedal is released during shifting from “4H” to “4L” or from “4L” to “4H”.	Operates transfer shift actuator motor to shift position detected by 4WD low switch.	4WD low indicator flashes at intervals of 0.5 seconds.
Vehicle speed limitation	• Detects signal from “4WD” switch at 5 km/h (3 mile/h) or more when transfer is at 4L. • Detects signal from “4WD-L” switch at 5 km/h (3 mile/h) or more when transfer is at 4H.	Cancels transfer shift actuator motor operation. (Returns shift position before it shifts.)	• 4WD low indicator flashes at intervals of 0.5 seconds. • Warning buzzer sounds 3 times.
	• Detects signal from “2WD” switch at 100 km/h (62 mile/h) or more when transfer is at 4H. • Detects signal from “4WD” switch at 100 km/h (62 mile/h) or more when transfer is at 2H.	Cancels transfer shift actuator motor operation.	• 4WD low indicator flashes at intervals of 0.5 seconds. • Warning buzzer sounds 3 times.
	Detects 5 km/h (3 mile/h) or more during shifting from “4H” to “4L” or from “4L” to “4H”.	Operates transfer shift actuator motor to shift position detected by 4WD low switch.	4WD low indicator flashes at intervals of 0.5 seconds.
Return control	Can not detect ON signal of 4WD switch within 3 seconds after transfer starts shifting from 2H to 4H.	Returns shift position before it shifts.	4WD indicator flashes at intervals of 0.5 seconds.

Transfer Control System Wiring Circuit Diagram

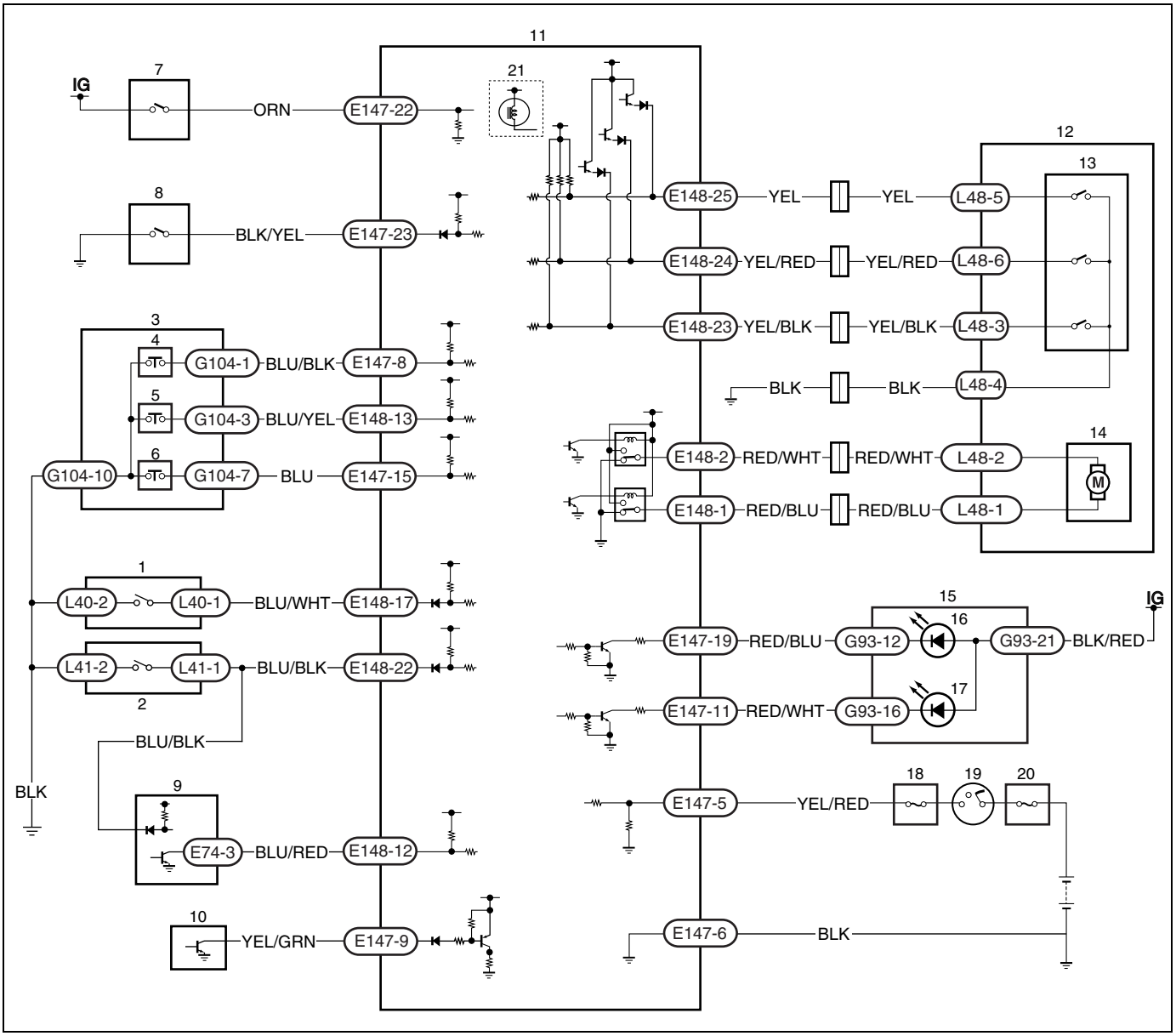

1. 4WD low switch	8. Clutch pedal switch (for M/T model)	15. Combination meter
2. 4WD switch	9. 4WD controller	16. 4WD indicator
3. 2WD/4WD switch	10. VSS	17. 4WD low indicator
4. “2WD” switch	11. Transfer control module	18. “4WD” fuse
5. “4WD” switch	12. Transfer shift actuator	19. Ignition switch
6. “4WD-L” switch	13. Transfer shift actuator limit switch	20. Main fuse
7. A/T shift switch (“N” range) (for A/T model)	14. Transfer shift actuator motor	21. Warning buzzer

Terminal Arrangement of Transfer Control Module

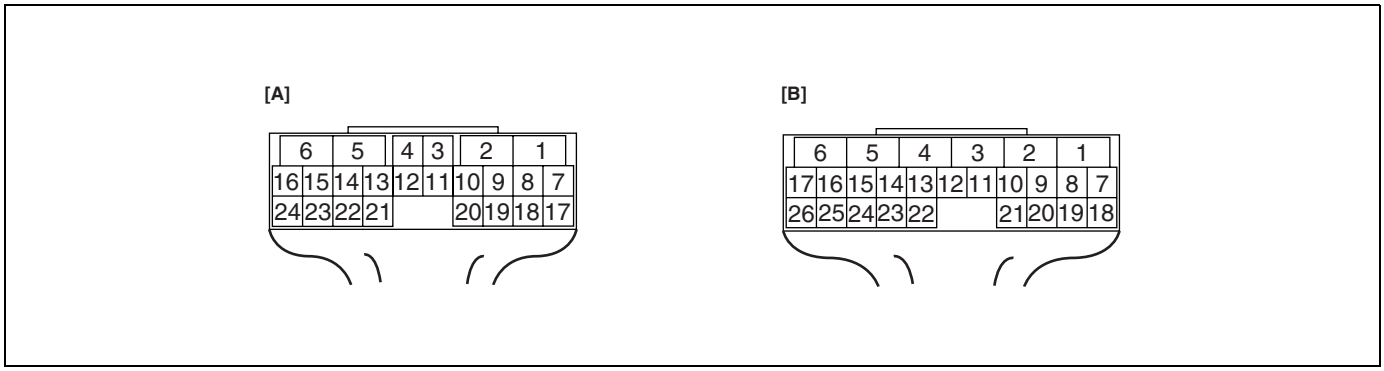

[A]: Connector “E147” viewed from harness side
[B]: Connector “E148” viewed from harness side

Terminal	Circuit	Terminal	Circuit
E147-5	Ignition power supply	E148-1	Transfer motor 2
E147-6	Ground	E148-2	Transfer motor 1
E147-8	“2WD” switch	E148-12	4WD controller (2WD/4WD position)
E147-9	Vehicle speed sensor (VSS)	E148-13	“4WD” switch
E147-11	4WD low indicator	E148-17	4WD low switch
E147-15	“4WD-L” switch	E148-22	4WD switch
E147-19	4WD indicator	E148-23	Limit switch 3
E147-22	A/T shift switch (“N” range) (for A/T model)	E148-24	Limit switch 2
E147-23	Clutch pedal switch (for M/T model)	E148-25	Limit switch 1

Input / Output Signal Table of Transfer Control Module

The transfer control module outputs the following signals to actuators, indicators, etc. according to operation of 2WD/4WD switch, etc.

		Output signal (to each component parts)			
		Transfer shift actuator	4WD indicator	4WD low indicator	Warning buzzer
Input signal	“2WD” switch	❍	❍		❍
	“4WD” switch	❍	❍	❍	❍
	“4WD-L” switch	❍		❍	❍
	VSS	❍			
	4WD switch	❍	❍	❍	❍
	4WD low switch	❍	❍	❍	❍
	A/T shift switch	❍		❍	❍
	Clutch pedal switch	❍		❍	❍
	4WD controller		❍		

Diagnosis

Transfer Diagnostic Flow Table

WARNING:

- **When shifting transfer from 2H to 4H with vehicle lifted, a hard impact occurs due to the speed difference between transfer output front shaft and transfer output rear shaft.**
  The impact may damage transfer system and vehicle may fall from lifting device, resulting in personal injury.
- **Be sure to depress brake pedal fully (tire stops completely) whenever shifting transfer from 2H to 4H with vehicle lifted.**

For the details of each step, refer to “Detail of Transfer Control System Check” in this section.

Step	Action	Yes	No
1	Malfunction analysis 1) Perform “Customer complaint analysis” in “Detail of Transfer Control System Check” in this section. 2) Perform “Problem symptom confirmation” in “Detail of Transfer Control System Check” in this section. Is there malfunction flashing in 4WD indicator and/or 4WD low indicator? (For detail of malfunction flashing, refer to “Indicator and Warning Buzzer Operation” in this section.)	Go to step 2.	Go to step 3.
2	Trouble shooting for malfunction flashing 1) Check and repair referring to applicable trouble shooting table for malfunction flashing. Are checks and repairs complete?	Go to Step 3.	Check and repair malfunction part(s).
3	Check for intermittent problem 1) Check intermittent troubles referring to “Intermittent and Poor Connection” in Section 0A. Is there any faulty condition?	Repair or replace malfunction part(s).	Go to Step 6.
4	Visual inspection and Transfer control system symptom diagnosis 1) Check and repair according to “Visual Inspection” and “Transfer System Symptom Diagnosis” in this section. Are there malfunction part(s)?	Check and repair malfunction part(s).	Go to Step 5.
5	Final confirmation test 1) Perform “Problem symptom confirmation” in “Detail of Transfer Control System Check” in this section. Is there any malfunction flashing and/or malfunction operation?	Go to Step 1.	End.

Detail of Transfer Diagnostic Flow Table

Step 3: Malfunction Analysis

Customer complaint analysis

Record details of the problem (failure, complaint) and how it occurred as described by the customer.
For this purpose, use of such a questionnaire form as shown in the following will facilitate collecting information to the point required for proper analysis and diagnosis.

Customer questionnaire (Example)

Customer's name:	Model:	VIN:	
Date of issue:	Date of Reg:	Date of problem:	Mileage:

Problem Symptoms	• 4WD indicator and/or 4WD low indicator abnormal: fails to turn on / fails to turn off / malfunction flashing • Abnormal noise while vehicle running: from transfer, from actuator, other _____ • No shifted to "2H" position • No shifted to "4H" position • No shifted to "4L" position
Frequency of Occurrence	• Continuous / Intermittent (times a day, a month) / other _____
Conditions for Occurrence of Ploblem	• When starting: at initial start only / at every start / other _____ • Vehicle speed: while accelerating / while decelerating / at stop / while turning / while running at constant speed / other _____ • Road surface condition: Paved road / rough road / snow-covered road / other _____
Environmental Condition	• Weather: fine / cloudy / rain / snow / other • Temperature: °F (°C)

NOTE:

The form is a standard sample. It should be modified according to conditions characteristic of each market.

Problem symptom confirmation

Check if what the customer claimed in "Customer Questionnaire" is actually found in the vehicle and if that symptom is found, whether it is identified as a failure. (This step should be shared with the customer if possible). Check transfer control system referring to "Transfer Control System Operation Inspection" in this section.

Step 4: Troubleshooting for Malfunction Flashing

Based on the malfunction flashing indicated in Step 3 and referring to applicable trouble shooting table, locate the cause of the trouble, namely in a sensor, switch, wire harness, connector, actuator assembly or other part and repair or replace faulty parts.

Step 5: Check for Intermittent Problem

Check parts where an intermittent trouble is easy to occur (e.g., wire harness, connector, etc.) referring to “Intermittent and Poor Connection” in Section 0A and related circuit of malfunction flashing in Step 3.

Step 6: Visual Inspection and Transfer Control System Symptom Diagnosis

Be sure to perform visual check of the items that support proper function of the transfer control system referring to “Visual Inspection” in this section.
Check the part of system suspected as a possible cause referring to “Transfer System Symptom Diagnosis” in this section.

Step 7: Final Confirmation Test

Confirm that the problem symptom has gone and the transfer control system is free from any abnormal conditions. If what has been repaired is related to the malfunction flashing, perform “Transfer Control System Operation Inspection” in this section and confirm that no malfunction flashing is indicated.

Transfer Control System Operation Inspection

NOTE:

- **Can not operate to shift directly between from 2H to 4L or from 4L to 2H.**
- **If it is difficult to shift from “2H” to “4H” while vehicle is moving, stop vehicle and push and release “4WD” switch once with vehicle at stop.**
- **If it is difficult to shift transfer from “4H” to “2H” while vehicle is moving, try accelerating and decelerating several times after pushing “2WD” switch. Be sure to wait until traffic conditions allow you to accelerate and decelerate safely before using this procedure.**
- **If it is difficult to shift between from “4H” to “4L”, try moving vehicle slowly back or forth a few feet while 4WD low indicator is blinking. Be sure to wait until traffic conditions allow you to move vehicle safely before using this procedure.**
- **Also, when shifting to the “4L” position, gear grinding noise may be generated under low temperature condition. In that case, move the vehicle backward slowly.**
- **4WD indicator blinks when transfer is shifting from 2H to 4H or from 4H to 2H.**
- **4WD low indicator blinks and warning buzzer sounds during shift operation between 4H and 4L.**
- **For details of 4WD indicator, 4WD low indicator and warning buzzer operation, refer to “Indicator and Warning Buzzer Operation” in this section.**

1) Check the transfer oil level insufficient or incorrect referring to “Oil Check” in this section and transfer mountings for wear or looseness before performing test-driving.
2) Confirm that transfer is at 2H position and ignition switch is at OFF position.
3) Check 4WD indicator and 4WD low indicator as follows.
   a) Turn ignition switch to ON position.
   b) Check that 4WD indicator and 4WD low indicator turns on for about 2seconds and then turns off.
      If any faulty condition is found, proceed to “Table-A: 4WD Indicator and/or 4WD Low Indicator Does Not Come ON at Ignition Switch ON” or “Table-B: 4WD Indicator and/or 4WD Low Indicator Comes ON Steady” in this section.
4) Inspect shift operation from 2H to 4H as follows.
   a) Start engine.
   b) Make sure that vehicle speed is less than 100 km/h (60 mph).
   c) Confirm that transfer shift position is 2H.
   d) Position front wheels straight ahead.
   e) Push “4WD” switch.
   f) Check that 4WD indicator flashes, and then comes on steady.
5) Inspect shift operation from 4H to 4L as follows.
   a) Stop vehicle completely with engine running.
   b) Position front wheels straight ahead.
   c) Confirm that transfer shift position is 4H.
   d) Place A/T select lever in “N” position or depress clutch pedal fully.
   e) Push “4WD-L” switch.
   f) Check that 4WD low indicator flashes, and then comes on steady.
6) Inspect shift operation from 4L to 4H as follows.
   a) Stop vehicle completely with engine running.
   b) Position front wheels straight ahead.
   c) Confirm that transfer shift position is 4L.
   d) Place A/T select lever in “N” position or depress clutch pedal fully.
   e) Push “4WD” switch.
   f) Check that 4WD low indicator flashes, and then not comes on.
7) Inspect shift operation form 4H to 2H as follows.
   a) Make sure that vehicle speed is less than 100 km/h (60 mph).
   b) Confirm that engine is running and transfer shift position is 4H.
   c) Position front wheels straight ahead.
   d) Push “2WD” switch.
   e) Check that 4WD indicator flashes, and then not comes on.

Visual Inspection

Check the following parts and systems visually.

Inspection item	Inspection condition	Referring
Transfer mounting(s)	Wear and looseness	–
Transfer gear oil	Level and leakage	Refer to “Oil Change” in this section.
Front differential oil	Level and leakage	Refer to “Oil Change” in Section 7E.
Rear differential oil	Level and leakage	Refer to “Oil Change” in Section 7F.
A/T fluid	Level and leakage	Refer to “Fluid Change” in Section 7B.
Fuse(s)	Burning	Check related fuses.
Battery	Fluid level and corrosion of terminal	Refer to “Battery” in Section 6H.
Connectors of electric wire harness	Disconnection and friction	Refer to “Intermittent and Poor Connection” in Section 0A.

Transfer System Symptom Diagnosis

Diagnose transfer assembly after performing transfer control system check described in “Transfer Diagnostic Flow Table” in this section.

Condition	Possible Cause	Correction / Reference Item
Transfer control system does not operate (4WD indicator or 4WD low indicator does not flash and warning buzzer does not sound)	“2WD” switch, “4WD” switch and/or “4WD-L” switch faulty	Check switch(es) referring to “2WD/4WD Switch Inspection” in this section.
	Transfer shift actuator motor and/or transfer shift actuator limit switch faulty	Check transfer shift actuator referring to “Transfer Shift Actuator Inspection” in this section.
	4WD switch and/or 4WD low switch faulty	Check switch(es) referring to “4WD Switch and 4WD Low Switch Inspection” in this section.
	Wiring or grounding faulty	Repair as necessary.
	Transfer control module faulty	Check transfer control module referring to “Inspection of Transfer Control Module and Its Circuits” in this section.
Transfer control system does not operate (4WD indicator or 4WD low indicator flashes and warning buzzer sounds)	Tire worn unevenly	Rotate or replace.
	A/T shift switch (“N” range) faulty (for A/T model)	Adjust or check A/T shift switch referring to “Transmission Range Sensor (Shift Switch)” in Section 7B.
	Clutch pedal switch faulty (for M/T model)	• For petrol (gasoline) engine model, check clutch pedal switch referring to “Clutch Pedal Switch” in Section 7C. • For diesel engine model, check clutch pedal switch referring to “Clutch Pedal Switch Inspection” in Section 7C2.

Condition	Possible Cause	Correction / Reference Item
Transfer control system does not operate (4WD indicator or 4WD low indicator flashes and warning buzzer sounds)	VSS faulty	• For petrol (gasoline) engine model, check VSS referring to "DTC P0500 (DTC No. 16) Vehicle Speed Sensor (VSS) Malfunction" in Section 6. • For diesel engine model, check VSS referring to "DTC P0500 Vehicle Speed Circuit Malfunction" in Section 6-2.
	Wiring or grounding faulty	Repair as necessary.
	Transfer control module faulty	Check transfer control module referring to "Inspection of Transfer Control Module and Its Circuits" in this section.
Transfer refuses to shift selected position although transfer control system operates (4WD indicator or 4WD low indicator keeps flashing or transfer could not complete shifting to 2H (or 4H) and shift position is returning to 4H (or 2H).)	Transfer shift actuator faulty	Check transfer shift actuator referring to "Transfer Shift Actuator Inspection" in this section.
	4WD switch and/or 4WD low switch faulty	Check switch(es) referring to "4WD Switch and 4WD Low Switch Inspection" in this section.
	Distorted shift shaft or shift fork	Check shift fork referring to "Transfer Inspection" in this section.
	Worn synchronizer ring	Check synchronizer ring referring to "Transfer Inspection" in this section.
	Worn chamfered tooth on sleeve or gear	Check chamfered tooth and gear referring to "Transfer Inspection" in this section.
	Distorted shift shaft	Check shift shaft referring to "Transfer Inspection" in this section.
	Wiring or grounding faulty	Repair as necessary.
	Transfer control module faulty	Check transfer control module referring to "Inspection of Transfer Control Module and Its Circuits" in this section.
Warning buzzer does not sound although transfer operate normally	Wiring or grounding faulty	Repair as necessary.
	Transfer control module faulty	Check transfer control module referring to "Inspection of Transfer Control Module and Its Circuits" in this section.
Air lock hub does not lock/unlock	4WD switch faulty	Check 4WD switch referring to "4WD Switch and 4WD Low Switch Inspection" in this section.
	Wiring or grounding faulty	Repair as necessary.
	4WD control system faulty	Check 4WD control system referring to "Diagnosis table" in Section 3D.

Condition	Possible Cause	Correction / Reference Item
Gear slipping out of mesh	Worn shift fork shaft No.1 and/or No.2	Check shift fork shaft No.1 and/or No.2 referring to “Transfer Inspection”.
	Worn shift fork and/or sleeve	Check shift fork and/or sleeve referring to “Transfer Inspection”.
	Weak or damaged locating spring	Check locating spring referring to “Transfer Inspection”.
	Worn bearings on input shaft and/or output shaft	Check bearing referring to “Transfer Inspection”.
	Worn chamfered tooth on sleeve or gear	Check sleeve and gear referring to “Transfer Inspection”.
	Missing or disengagement of circlip(s)	Check circlip(s) referring to “Transfer Inspection”.
Noise	Inadequate or insufficient lubricant	Replenish transfer oil referring to “Oil Change” in this section.
	Damaged or worn bearing(s)	Check bearing(s) referring to “Transfer Inspection”.
	Damaged or worn gear(s)	Check gear(s) referring to “Transfer Inspection”.
	Damaged or worn synchronizer ring(s)	Check synchronizer ring(s) referring to “Transfer Inspection”.
	Damaged or worn chamfered tooth on sleeve(s) and/or gear(s)	Check sleeve(s) and/or gear(s) referring to “Transfer Inspection”.

Table A: 4WD Indicator and/or 4WD Low Indicator Does Not Come ON at Ignition Switch ON

Wiring Diagram

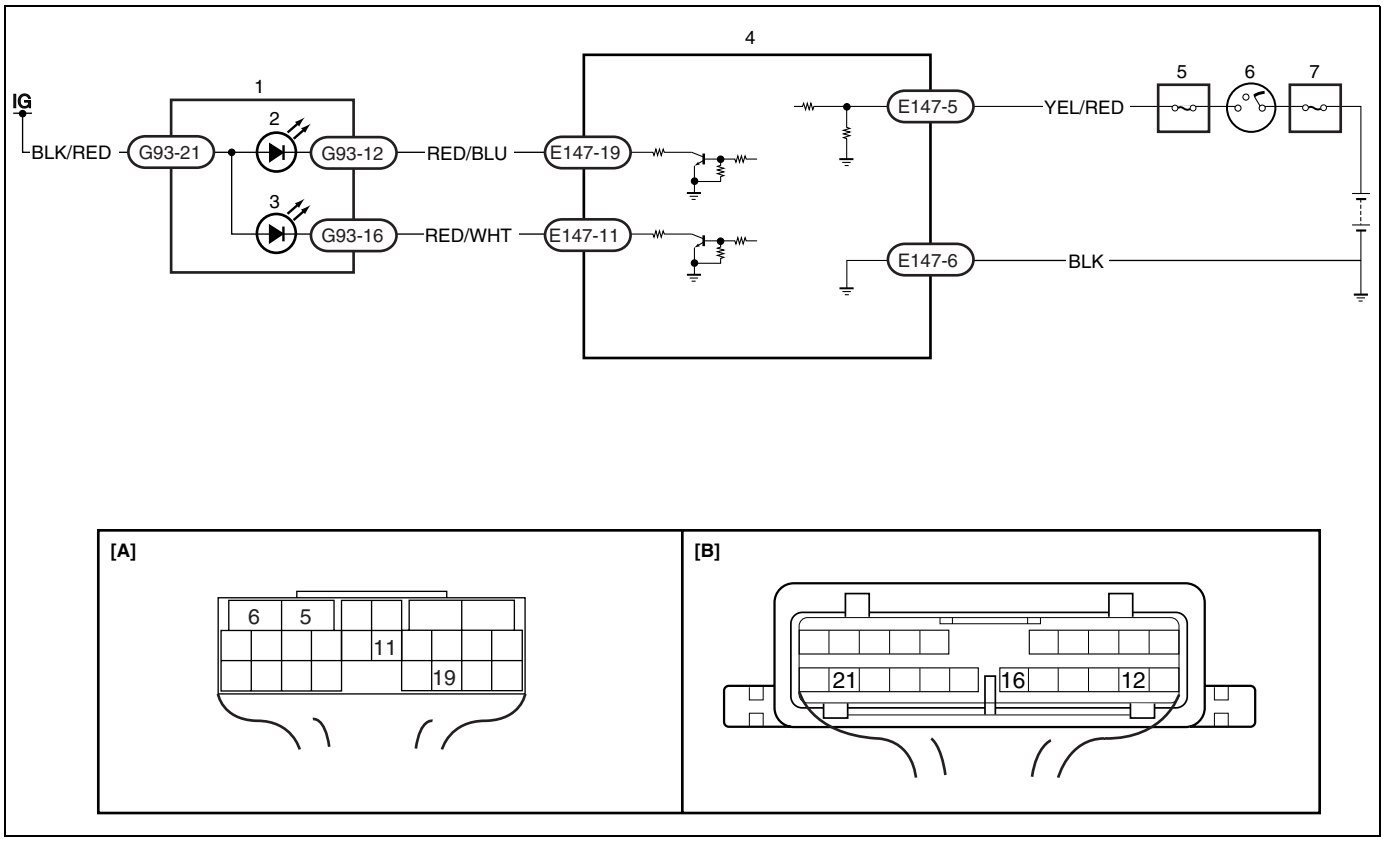

[A]: Transfer control module connector “E147” viewed from harness side	2. 4WD indicator	5. “4WD” fuse
[B]: Combination meter connector “G93” viewed from harness side	3. 4WD low indicator	6. Ignition switch
1. Combination meter	4. Transfer control module	7. Main fuse

Indicator Operation

Refer to “4WD Indicator and Warning Buzzer Operation” in this section.

Troubleshooting

Step	Action	Yes	No
1	1) Turn ignition switch to ON position. Do other warning lamps come ON?	Go to Step 2.	Go to Step 4.
2	4WD indicator and/or 4WD low indicator circuit check 1) Turn ignition switch to OFF position. 2) Disconnect transfer control module connector "E147". 3) Check for proper connection to "E147-11" terminal and/or "E147-19" terminal of transfer control module. 4) If OK, then ground "E147-11" terminal and/or "E147-19" terminal of transfer control module connector by using service wire with ignition switch turned ON. Does 4WD indicator and/or 4WD low indicator come ON?	Go to Step 6.	Go to Step 3.
3	4WD indicator and/or 4WD low indicator circuit check 1) Turn ignition switch to OFF position. 2) Remove combination meter referring to "Combination Meter" in Section 8. 3) Check for proper connection to "G93-12" terminal and/or "G93-16" terminal of combination meter connector. 4) If OK, then measure resistance the followings. • Between "G93-12" terminal of combination meter connector and "E147-19" terminal of transfer control module connector. • Between "G93-16" terminal of combination meter connector and "E147-11" terminal of transfer control module connector. Is each resistance 1 Ω or less?	Substitute a known-good combination meter and recheck.	"RED/BLU" and/or "RED/WHT" wire circuit open or high resistance.
4	Fuse check 1) Turn ignition switch to OFF position. Is "METER" fuse in good condition?	Go to Step 5.	Replace fuse and check for short.
5	Combination meter power circuit check 1) Remove combination meter referring to "Combination Meter" in Section 8. 2) Check for proper connection to "G93-21" terminal of combination meter connector. 3) If OK, then measure voltage between "G93-21" terminal of combination meter connector and vehicle body ground with ignition switch turned ON. Is voltage 10 – 14 V?	Substitute a known-good combination meter and recheck.	"BLK/RED" and/or circuit open.

Step	Action	Yes	No
6	Fuse check 1) Turn ignition switch to OFF position. Is “4WD” fuse in good condition?	Go to Step 7.	Replace fuse and check for short.
7	Transfer control module power circuit check 1) Check for proper connection to “E147-5” terminal of transfer control module connector. 2) If OK, then measure voltage between “E147-5” terminal of transfer control module connector and vehicle body ground with ignition switch turned ON. Is voltage 10 – 14 V?	Go to Step 8.	“YEL/RED” wire circuit open.
8	Transfer control module ground circuit check 1) Check for proper connection to “E147-6” terminal of transfer control module connector. 2) If OK, then measure resistance between “E147-6” terminal of transfer control module connector and vehicle body ground. Is it 1 Ω or less?	Substitute a known-good transfer control module and recheck.	“BLK” wire circuit open.

Table B: 4WD Indicator and/or 4WD Low Indicator Come ON Steady

Wiring Diagram

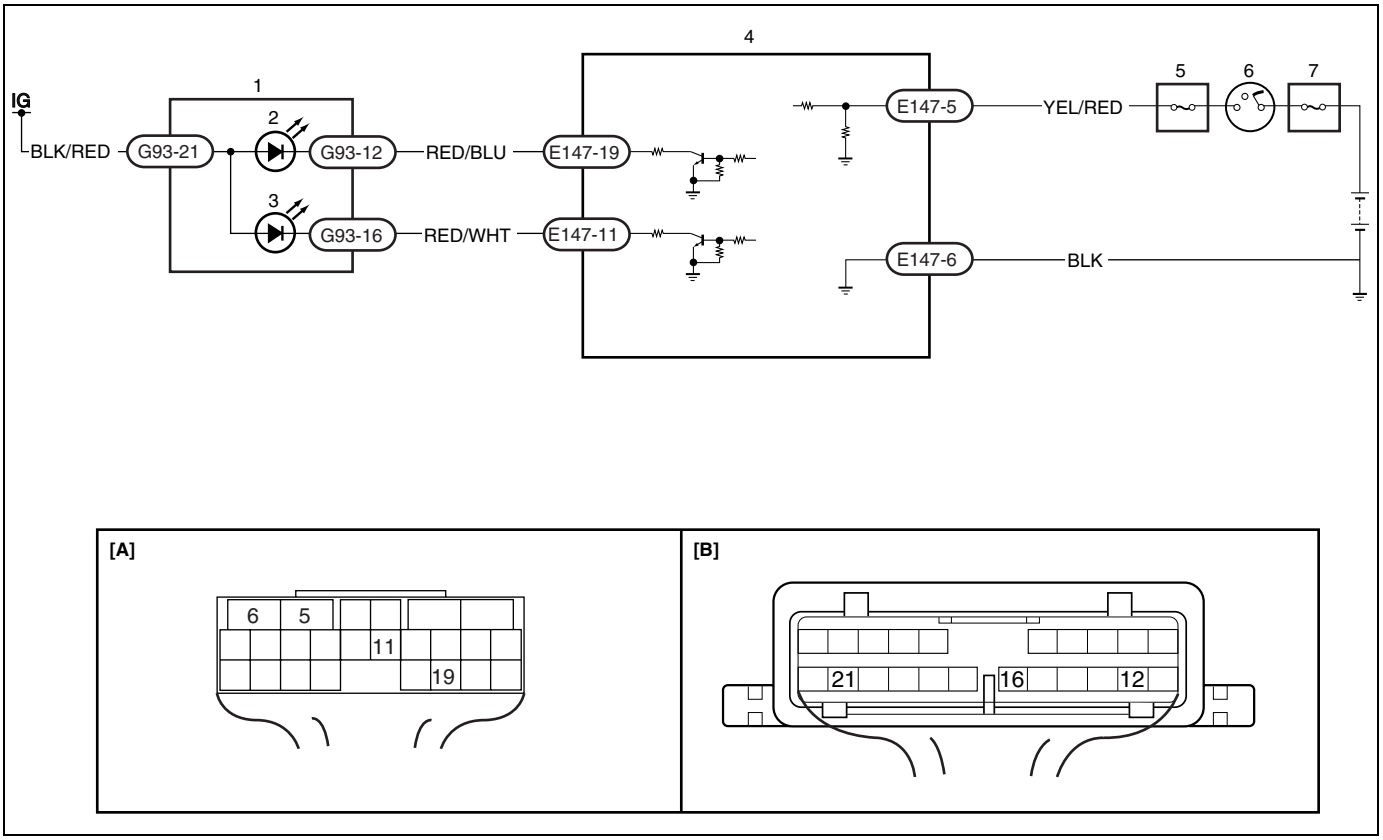

[A]: Transfer control module connector “E147” viewed from harness side	2. 4WD indicator	5. “4WD” fuse
[B]: Combination meter connector “G93” viewed from harness side	3. 4WD low indicator	6. Ignition switch
1. Combination meter	4. Transfer control module	7. Main fuse

Indicator Operation

Refer to “4WD Indicator and Warning Buzzer Operation” in this section.

Troubleshooting

Step	Action	Yes	No
1	4WD indicator and 4WD low indicator circuit check 1) Turn ignition switch to OFF position. 2) Disconnect transfer control module connector “E147”. 3) Turn ignition switch to ON position. Does indicator come ON?	Go to Step 2.	Substitute a known-good transfer control module and recheck.

Step	Action	Yes	No
2	4WD indicator and 4WD low indicator circuit check 1) Turn ignition switch to OFF position. 2) Remove combination meter referring to "Combination Meter" in Section 8. 3) Measure resistance the followings. • Between "G93-12" of combination meter connector and vehicle body ground. • Between "G93-16" of combination meter connector and vehicle body ground. Is each resistance 1 MΩ or more?	Substitute a known-good combination meter and recheck.	"RED/BLU" wire and/or "RED/WHT" wire circuit shorted to ground.

Table C: 4WD Indicator Flushes at Intervals of 0.5 Seconds Continuously

Wiring Diagram

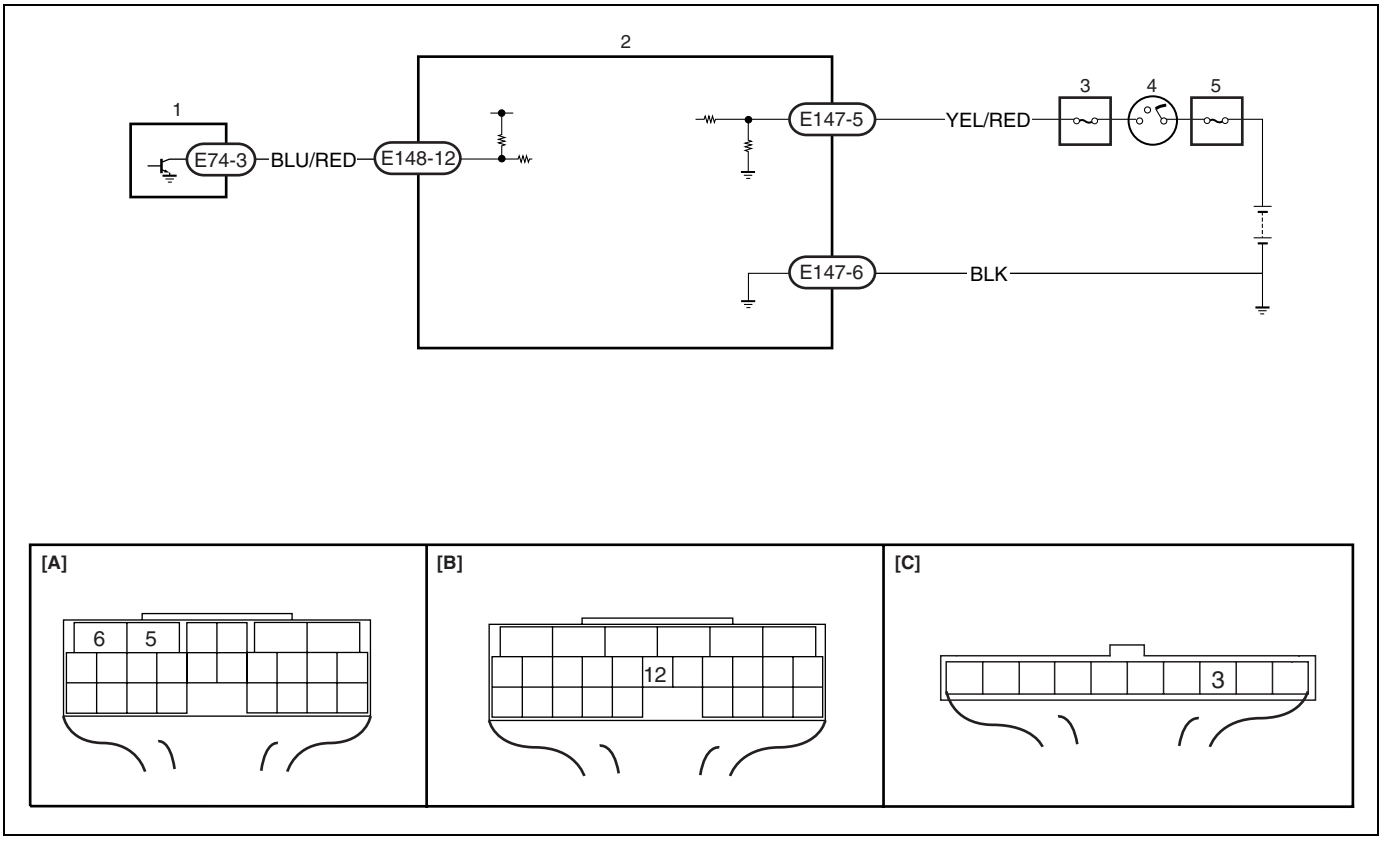

[A]: Transfer control module connector "E147" viewed from harness side	1. 4WD controller	4. Ignition switch
[B]: Transfer control module connector "E148" viewed from harness side	2. Transfer control module	5. Main fuse
[C]: 4WD controller connector "E74" viewed from harness side	3. "4WD" fuse	

Indicator Operation

Refer to "4WD Indicator and Warning Buzzer Operation" in this section.

Troubleshooting

Step	Action	Yes	No
1	4WD control system check 1) Check 4WD controller referring to "4WD Control and its Circuit Check" in Section 3D. Is it in good condition?	Substitute a known-good Transfer control module and recheck.	Repair or replace malfunction part(s).

Table D: 4WD Indicator and 4WD Low Indicator Flashes at Intervals of 0.2 Seconds

Wiring Diagram

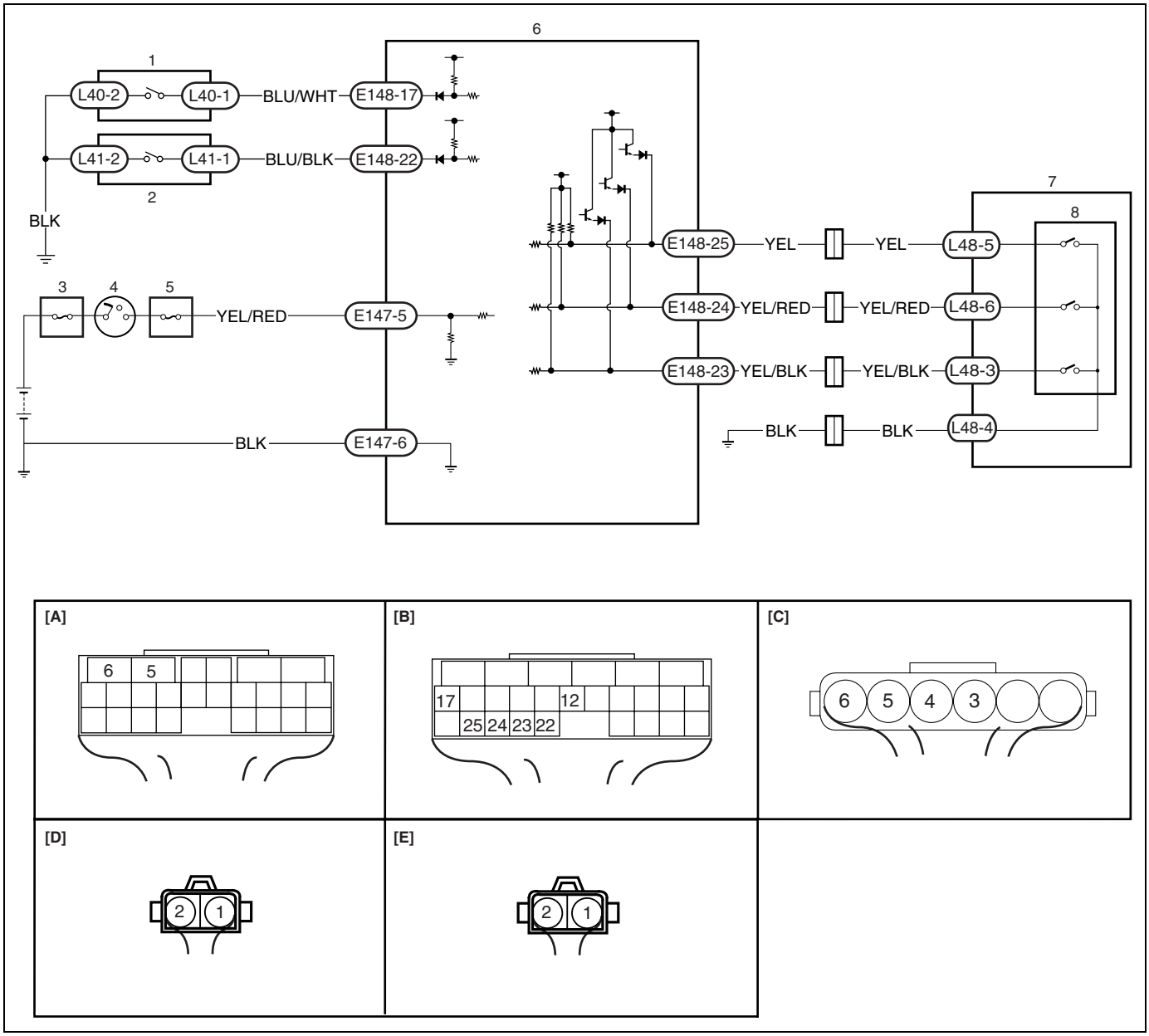

[A]: Transfer control module connector “E147” viewed from harness side	1. 4WD low switch	6. Transfer control module
[B]: Transfer control module connector “E148” viewed from harness side	2. 4WD switch	7. Transfer shift actuator
[C]: Transfer shift actuator connector “L48” viewed from harness side	3. Main fuse	8. Transfer shift actuator limit switch
[D]: 4WD low switch connector “L40” viewed from harness side	4. Ignition switch	
[E]: 4WD switch connector “L41” viewed from harness side	5. “4WD” fuse	

Indicator Operation

Refer to “4WD Indicator and Warning Buzzer Operation” in this section.

Troubleshooting

Step	Action	Yes	No
1	4WD low switch circuit check 1) Turn ignition switch to OFF position. 2) Disconnect 4WD low switch connector “L40”. 3) Check for proper connection to 4WD low switch at terminals “L40-1”. 4) If OK, then voltage between “L40-1” of 4WD low switch connector and vehicle body ground with ignition switch turned ON. Is voltage 10 – 14 V?	Go to Step 3.	Go to Step 2.
2	4WD low switch circuit check 1) Turn ignition switch to OFF position. 2) Disconnect transfer control module connector “E148”. 3) Check for proper connection to 4WD low switch at terminal “L40-1” and transfer control module at terminal “E148-17”. 4) If OK, then measure resistance between “L40-1” of 4WD low switch connector and “E148-17” of transfer control module connector. Is it 1 Ω or less?	Go to Step 4.	“BLU/WHT” wire is open or high resistance.
3	4WD low switch check 1) Check 4WD low switch referring to “4WD Low Switch Inspection” in this section. Is it in good condition?	“BLK” wire is open or high resistance.	Replace 4WD low switch.
4	4WD switch circuit check 1) Turn ignition switch to OFF position. 2) Disconnect 4WD switch connector “L41”. 3) Check for proper connection to 4WD switch at terminals “L41-1”. 4) If OK, then voltage between “L41-1” of 4WD switch connector and vehicle body ground with ignition switch turned ON. Is voltage 10 – 14 V?	Go to Step 6.	Go to Step 5.

Step	Action	Yes	No
5	4WD switch circuit check 1) Turn ignition switch to OFF position. 2) Disconnect transfer control module connector “E148”. 3) Check for proper connection to 4WD switch at terminal “L41-1” and transfer control module at terminal “E148-22”. 4) If OK, then measure resistance between “L41-1” of 4WD switch connector and “E148-22” of transfer control module connector. Is it 1 Ω or less?	Go to Step 7.	“BLU/BLK” wire is open or high resistance.
6	4WD switch check 1) Check 4WD switch referring to “4WD Switch Inspection” in this section. Is it in good condition?	“BLK” wire is open or high resistance.	Replace 4WD switch.
7	Transfer shift actuator circuit check 1) Turn ignition switch to OFF position. 2) Disconnect transfer shift actuator connector “L48”. 3) Check for proper connection to transfer shift actuator at terminals “L48-5”, “L48-6”, “L48-3” and “L48-4”. 4) If OK, then measure resistance between “L48-5” of transfer shift actuator connector and “E148-25” of transfer control module connector. Is it 1 Ω or less?	Go to Step 8.	“YEL” wire is open or high resistance.
8	Transfer shift actuator circuit check 1) Measure resistance between “L48-6” of transfer shift actuator connector and “E148-24” of transfer control module connector. Is it 1 Ω or less?	Go to Step 9.	“YEL/RED” wire is open or high resistance.
9	Transfer shift actuator circuit check 1) Measure resistance between “L48-3” of transfer shift actuator connector and “E148-23” of transfer control module connector. Is it 1 Ω or less?	Go to Step 10.	“YEL/BLK” wire is open or high resistance.
10	Transfer shift actuator circuit check 1) Measure resistance between “L48-4” of transfer shift actuator connector and vehicle body ground. Is it 1 Ω or less?	Go to Step 11.	“BLK” wire is open or high resistance.
11	Transfer shift actuator limit switch check 1) Check transfer shift actuator limit switch referring to “Transfer Shift Actuator Inspection” in this section. Is it in good condition?	Substitute a known-good Transfer control module and recheck.	Replace transfer shift actuator.

Inspection of Transfer Control Module and Its Circuits

Transfer control module and its circuits can be checked at transfer control module wiring couplers by measuring voltage, pulse signal and resistance.

CAUTION:
Transfer control module cannot be checked by itself. It is strictly prohibited to connect voltmeter or ohmmeter to transfer control module with couplers disconnected from it.

Voltage and Signal Check

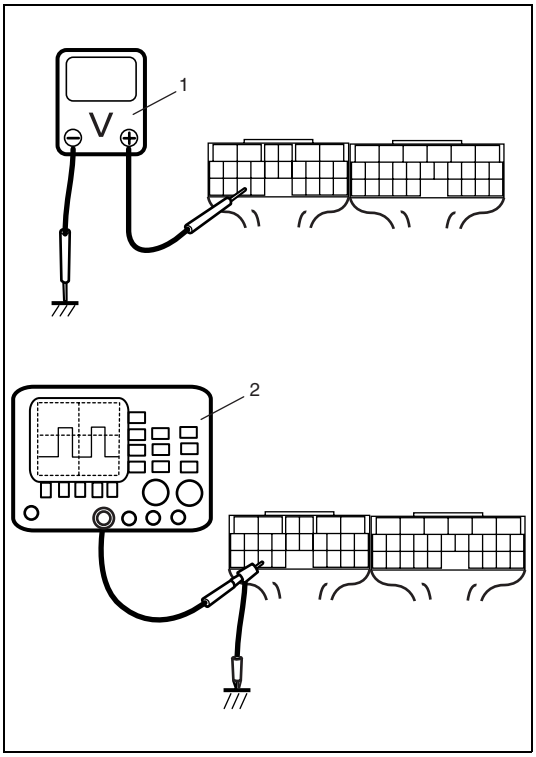

1) Check voltage using voltmeter (1) connected to each terminal of couplers.
2) Check signal using oscilloscope (2) connected to each terminal of couplers.

NOTE:

- **As each terminal voltage is affected by the battery voltage, confirm that it is 11 V or more when ignition switch is turned ON.**
- **Pulse signal cannot be measured by voltmeter. It can be measured by oscilloscope.**
- **Item with asterisk (*) in normal voltage column can be read only by oscilloscope.**

Transfer control module connector (Viewed from harness side)

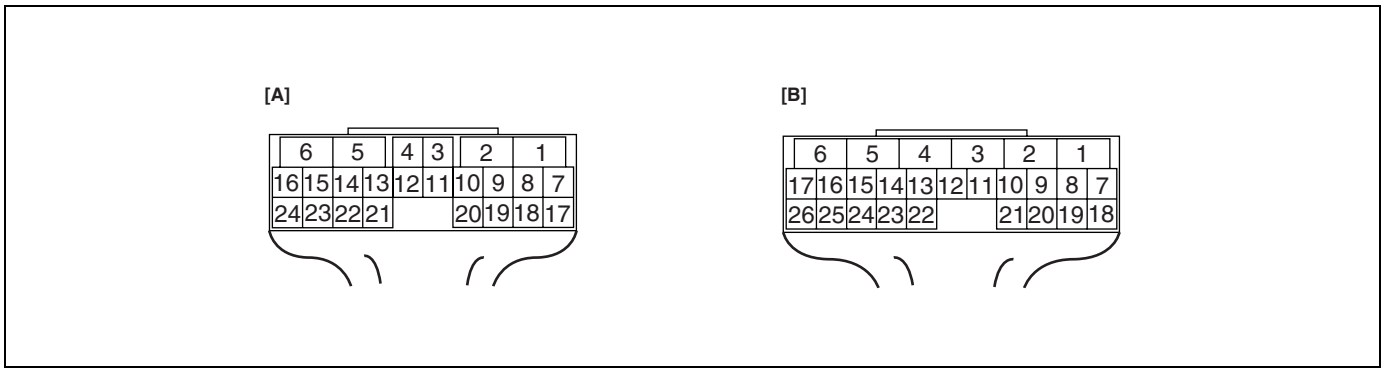

[A]: Connector “E147” viewed from harness side
[B]: Connector “E148” viewed from harness side

Terminal	Wire color	Circuit	Normal Voltage	Condition
E147-1	–	Blank	–	–
E147-2	–	Blank	–	–
E147-3	–	Blank	–	–
E147-4	–	Blank	–	–
E147-5	YEL/RED	Ignition power supply	10 – 14 V	Ignition switch turned to ON position
E147-6	BLK	Ground	0 – 1 V	–
E147-7	–	Blank	–	–
E147-8	BLU/BLK	“2WD” switch	10 – 14 V	Ignition switch turned to ON position and “2WD” switch released
			0 – 1.5 V	Ignition switch turned to ON position and “2WD” switch kept pushed
E147-9	YEL/GRN	Vehicle speed sensor (VSS)	*10 – 14 V ↑↓ 0 – 2 V (Repeated indicator)	Vehicle running
E147-10	–	Blank	–	–
E147-11	RED/WHT	4WD low indicator	10 – 14 V	Ignition switch turned to ON position and transfer shifted to 2H or 4H
			0 – 3 V	Ignition switch turned to ON position and transfer shifted to 4L
E147-12	–	Blank	–	–
E147-13	–	Blank	–	–
E147-14	–	Blank	–	–
E147-15	BLU/BLK	“4WD-L” switch	10 – 14 V	Ignition switch turned to ON position and “4WD-L” switch released
			0 – 1.5 V	Ignition switch turned to ON position and “4WD-L” switch kept pushed
E147-16	–	Blank	–	–
E147-17	–	Blank	–	–
E147-18	–	Blank	–	–
E147-19	RED/BLU	4WD indicator	10 – 14 V	Ignition switch turned to ON position and transfer shifted to 2H
			0 – 3 V	Ignition switch turned to ON position and transfer shifted to 4H or 4L
E147-20	–	Blank	–	–
E147-21	–	Blank	–	–

Terminal	Wire color	Circuit	Normal Voltage	Condition
E147-22	ORN	A/T shift switch (“N” range) (for A/T model)	10 – 14 V	Ignition switch turned to ON position and A/T shifted to “N” range
			0 – 1.5 V	Ignition switch turned to ON position and A/T shifted to other than “N” range
E147-23	BLK/YEL	Clutch pedal switch (for M/T model)	0 – 1.5 V	Ignition switch turned to ON position and clutch pedal depressed
			10 – 14 V	Ignition switch turned to ON position and clutch pedal released
E147-24	–	Blank	–	–
E148-1	RED/WHT	Transfer shift actuator motor 2	10 – 14 V	Ignition switch turned to ON position and transfer shift actuator being rotated when transfer shifted from 4L to 4H or from 4H to 2H
			0 – 1 V	Ignition switch turned to ON position and transfer shift actuator being rotated when transfer shifted from 2H to 4H or from 4H to 4L
E148-2	RED/BLU	Transfer shift actuator motor 1	0 – 1 V	Ignition switch turned to ON position and transfer shift actuator being rotated when transfer shifted from 4L to 4H or from 4H to 2H
			10 – 14 V	Ignition switch turned to ON position and transfer shift actuator being rotated when transfer shifted from 2H to 4H or from 4H to 4L
E148-3	–	Blank	–	–
E148-4	–	Blank	–	–
E148-5	–	Blank	–	–
E148-6	–	Blank	–	–
E148-7	–	Blank	–	–
E148-8	–	Blank	–	–
E148-9	–	Blank	–	–
E148-10	–	Blank	–	–
E148-11	–	Blank	–	–
E148-12	BLU/RED	4WD controller	10 – 14 V	Ignition switch turned to ON position and transfer shifted to 2H
			0 – 1.5 V	Ignition switch turned to ON position and transfer shifted to 4Hor 4L
E148-13	BLU/YEL	“4WD” switch	10 – 14 V	Ignition switch turned to ON position and “4WD” switch released
			0 – 1.5 V	Ignition switch turned to ON position and “4WD” switch kept pushed
E148-14	–	Blank	–	–
E148-15	–	Blank	–	–
E148-16	–	Blank	–	–
E148-17	BLU/WHT	4WD low switch	10 – 14 V	Ignition switch turned to ON position and transfer shifted to 2H or 4H
			0 – 1.5 V	Ignition switch turned to ON position and transfer shifted to 4L
E148-18	–	Blank	–	–
E148-19	–	Blank	–	–
E148-20	–	Blank	–	–
E148-21	–	Blank	–	–

Terminal	Wire color	Circuit	Normal Voltage	Condition
E148-22	BLU/BLK	4WD switch	0 – 1.5 V	Ignition switch turned to ON position and transfer shifted to 4H or 4L
			10 – 14 V	Ignition switch turned to ON position and transfer shifted to 2H
E148-23	YEL/BLK	Limit switch 3	10 – 14 V	Ignition switch turned to ON position and transfer shifted to 4H
			0 – 0.88 V	Ignition switch turned to ON position and transfer shifted to 4L
E148-24	YEL/RED	Limit switch 2	10 – 14 V	Ignition switch turned to ON position and transfer shifted to 2H
			0 – 0.88 V	Ignition switch turned to ON position and transfer shifted to 4H
E148-25	YEL	Limit switch 1	10 – 14 V	Ignition switch turned to ON position and transfer shifted to 4H
			0 – 0.88 V	Ignition switch turned to ON position and transfer shifted to 2H
E148-26	–	Blank	–	–

On-Vehicle Service

Transfer Gear Oil Change

NOTE:

Whenever vehicle is hoisted for any service work other than oil change, also be sure to check for oil leakage.

1) Before changing or inspecting oil, be sure to stop engine and lift up vehicle horizontally.
2) With vehicle lifted up, check oil leakage. If leakage exists, correct or repair it.

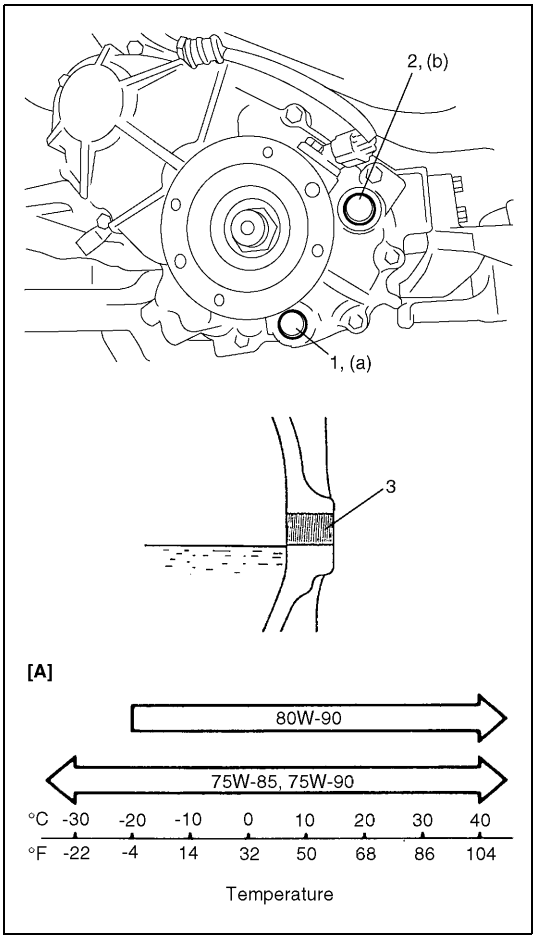

3) Remove oil filler plug (2).
4) Remove drain plug (1), and drain old oil.
5) Tighten new oil drain plug to specified torque.

Tightening torque
Oil drain plug (a): 23 N·m (2.3 kg-m, 17.0 lb-ft)

6) Pour new specified oil until oil level reaches bottom of oil filler plug hole (3) as shown in figure.

NOTE:

- **For SAE classification, refer to viscosity chart [A].**
- **It is highly recommended to use API GL-4 75W-90 gear oil.**

Oil specification
: API GL-4

Reference:
Oil capacity
: 1.13 liters (2.4/2.0 US/Imp. pt)

7) Tighten new oil level / filler plug to specified torque.

Tightening torque
Oil level / filler plug (b): 23 N·m (2.3 kg-m, 17.0 lb-ft)

4WD Switch and 4WD Low Switch Removal and Installation

Removal

1) Disconnect negative (–) cable at battery.
2) Hoist vehicle.

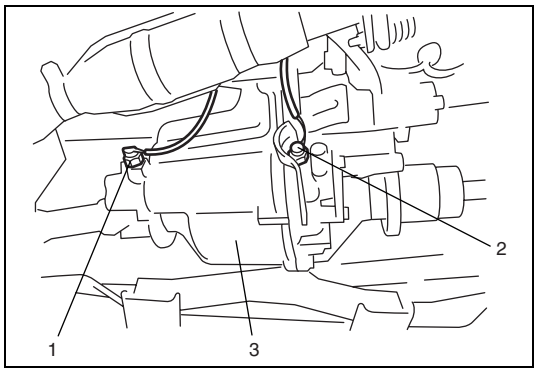

3) Disconnect 4WD switch connector and 4WD low switch connector.
4) Remove 4WD switch (1), 4WD low switch (2) and steel balls from transfer assembly (3).

Installation

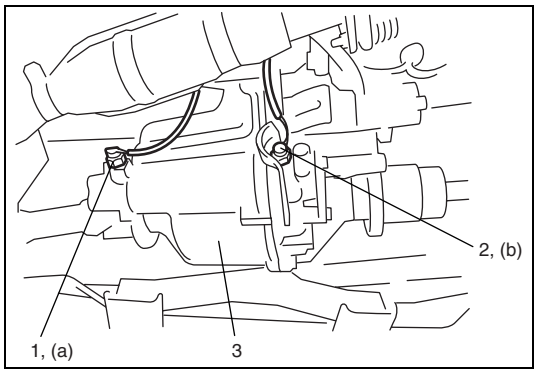

1) Install 4WD switch (1), 4WD low switch (2) and steel balls to transfer assembly (3).

Tightening torque
4WD switch (a): 19 N·m (1.9 kg-m, 14.0 lb-ft)
4WD low switch (b): 19 N·m (1.9 kg-m, 14.0 lb-ft)

2) Connect 4WD switch connector and 4WD low switch connector.
3) Connect negative (–) cable at battery.

4WD Switch and 4WD Low Switch Inspection

1) Remove 4WD switch or 4WD low switch referring to “4WD Switch and 4WD Low Switch Removal and Installation” in this section.

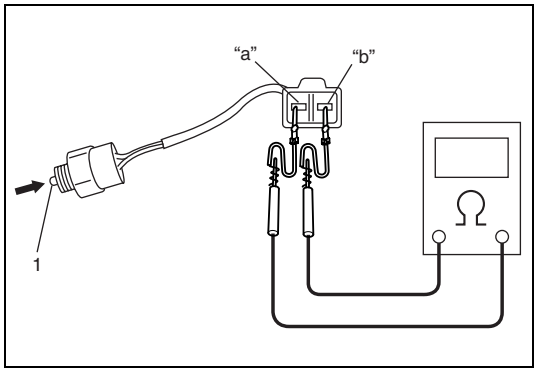

2) Check for continuity between “a” and “b” terminals of switch. If check result is not as specified below, replace switch.

4WD switch and 4WD low switch specification
Switch button (1) released: No continuity
Switch button (1) kept pushing: Continuity

3) Install 4WD switch or 4WD low switch referring to “4WD Switch and 4WD Low Switch Removal and Installation” in this section.

2WD/4WD Switch Removal and Installation

Removal

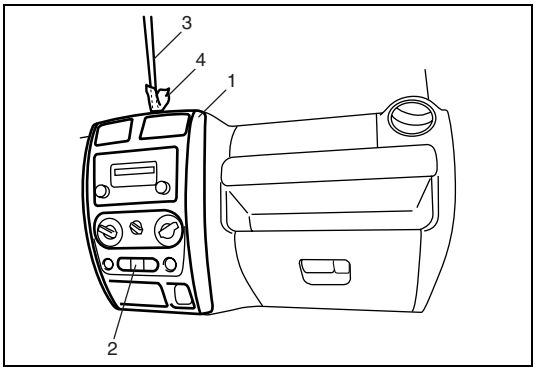

1) Remove center garnish (1).

NOTE:

Be careful not to damage center garnish.

2) Remove 2WD/4WD switch (2), and then disconnect 2WD/4WD switch connector.

3. Flat end screwdriver
4. Rag

Installation

Reverse removal procedure for installation.

2WD/4WD Switch Inspection

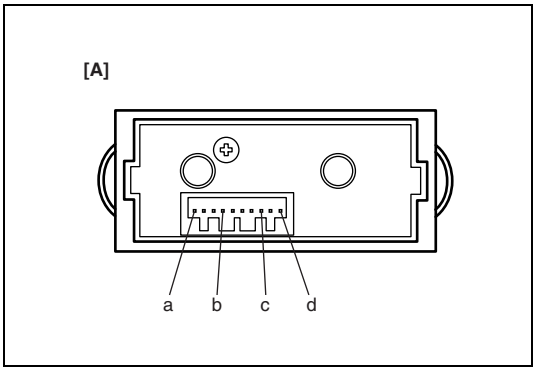

Inspection 2WD/4WD switch as follows.
If any faulty condition is found, replace 2WD/4WD switch.

"2WD" switch

Check continuity between "a" and "d" terminals of 2WD/4WD switch.

"2WD" switch button released: No continuity
"2WD" switch button kept pushing: Continuity

"4WD" switch

Check continuity between "a" and "c" terminals of 2WD/4WD switch.

"4WD" switch button released: No continuity
"4WD" switch button kept pushing: Continuity

"4WD-L" switch

Check continuity between "a" and "b" terminals of 2WD/4WD switch.

"4WD-L" switch button released: No continuity
"4WD-L" switch button kept pushing: Continuity

[A]: 2WD/4WD switch

VSS Removal and Installation

Removal

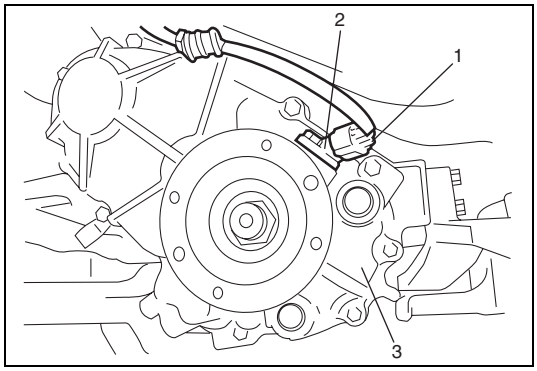

1) Disconnect negative (–) cable at battery.
2) Hoist vehicle.
3) Disconnect VSS connector (1).
4) Remove VSS (2) from transfer assembly (3).

Installation

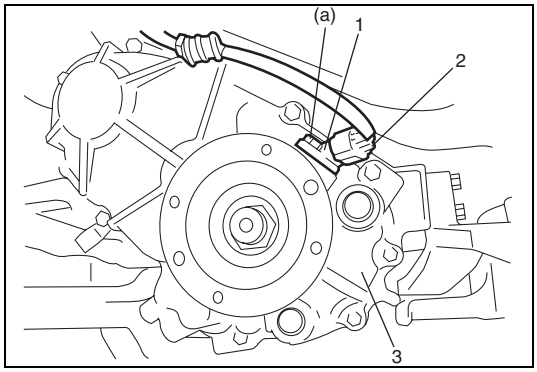

1) Install VSS (1) with new O-ring to transfer assembly (3).

Tightening torque
VSS bolt (a): 5 N·m (0.5 kg-m, 3.5 lb-ft)

2) Connect VSS connector (2).
3) Connect negative (–) cable at battery.

Transfer Assembly Mounting Components

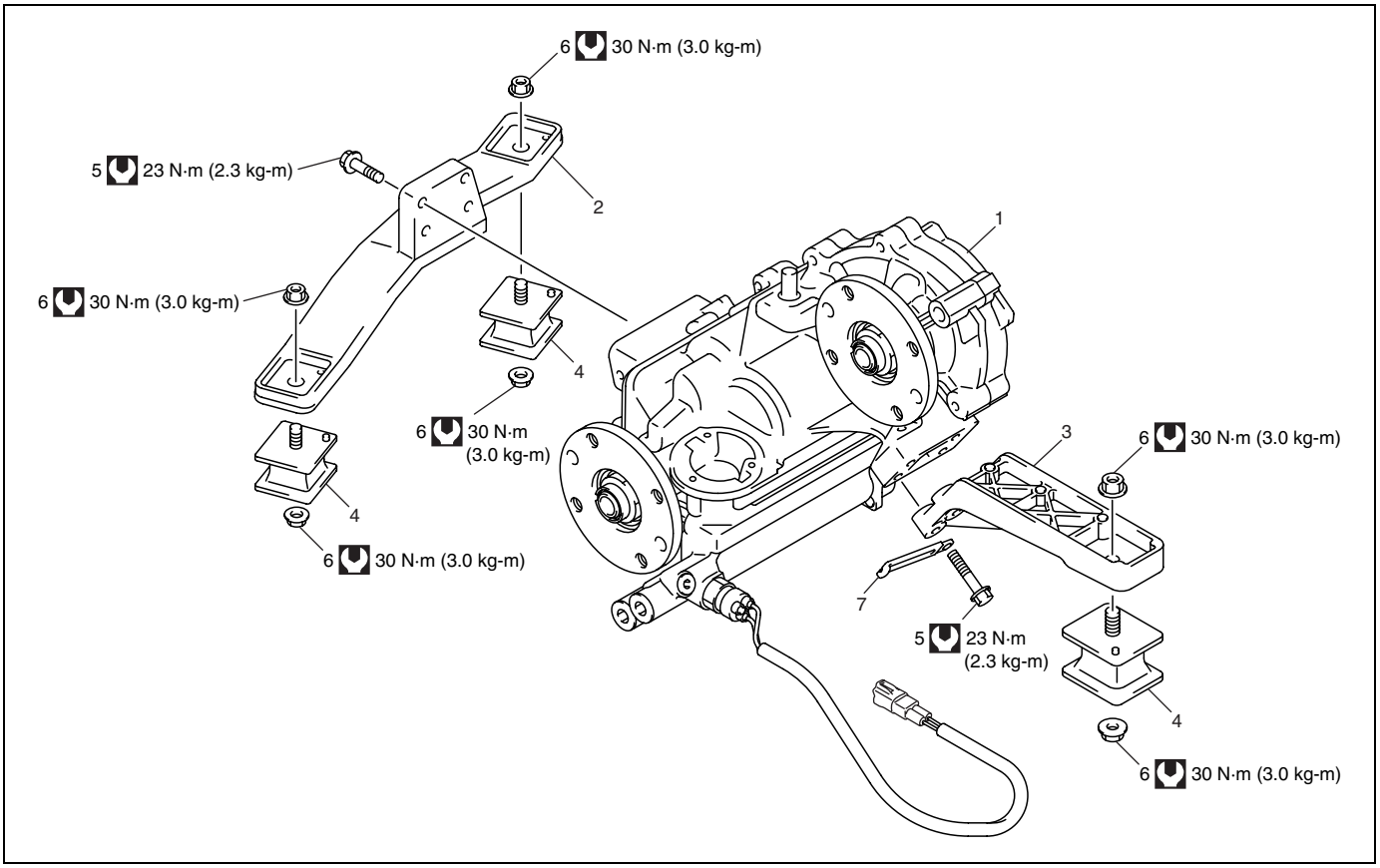

1. Transfer assembly	4. Mounting	7. Clamp
2. Mounting left bracket	5. Transfer mounting bracket bolt	Tightening torque
3. Mounting right bracket	6. Transfer mounting nut	

Transfer Assembly Dismounting and Remounting

Dismounting

NOTE:

Set shift position to 4H position to facilitate transfer dismounting and remounting.

1) Disconnect negative (–) cable at battery.
2) Drain transfer oil referring to “Transfer Gear Oil Change” in this section.

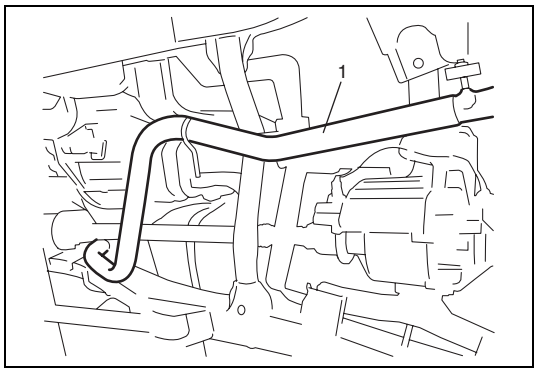

3) Remove exhaust pipe (1).
4) Remove front and rear propeller shafts referring to “Propeller Shafts” in Section 4B.
5) Disconnect 4WD switch connector, 4WD low switch connector and transfer shift actuator motor connector and unclamp harness.
6) Disconnect VSS connector.

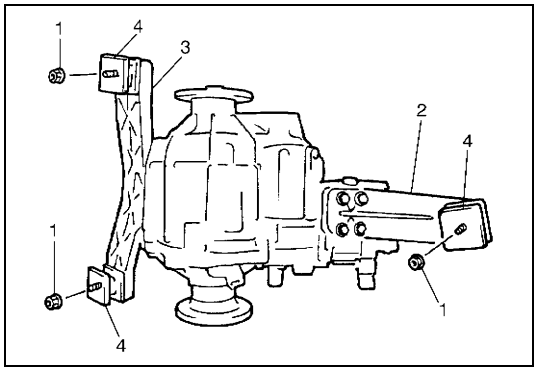

7) With transfer supported on jack, remove 3 mounting nuts (1), and then mounting right bracket (2) from transfer.
8) Remove transfer with mounting left bracket (3) from vehicle body.
9) Remove mounting left bracket from transfer.

4. Mounting

Remounting

Reverse dismounting procedure for remounting noting the following.

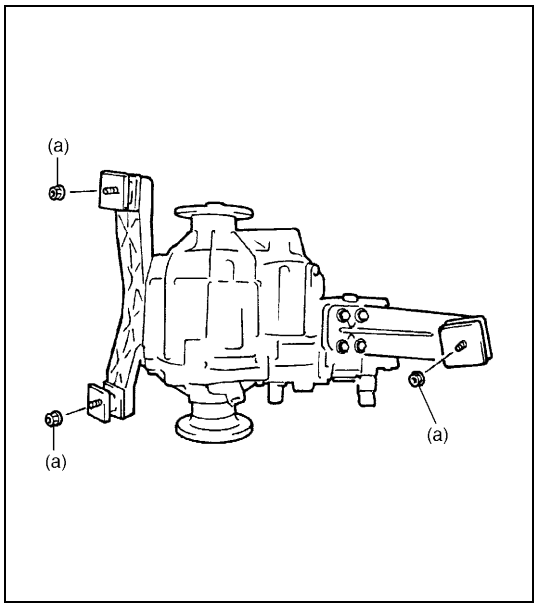

- Tighten bolts and nuts to specified torque.

Tightening torque
Transfer mounting nut (a): 30 N·m (3.0 kg-m, 22.0 lb-ft)

- Set each clamp for wiring securely.
- Connect VSS connector.
- Connect 4WD switch connector (gray connector).
- Connect 4WD low switch connector (white connector).
- Connect transfer shift actuator motor connector.
- Refill transfer gear oil referring to “Transfer Gear Oil Change” in this section.
- Install front and rear propeller shaft referring to “Propeller Shafts” in Section 4B.
- Install exhaust pipe referring to “Exhaust Component” in Section 6K.
- Connect battery negative (–) terminal to battery.

Unit Repair Overhaul

Transfer Unit Components

Transfer case component

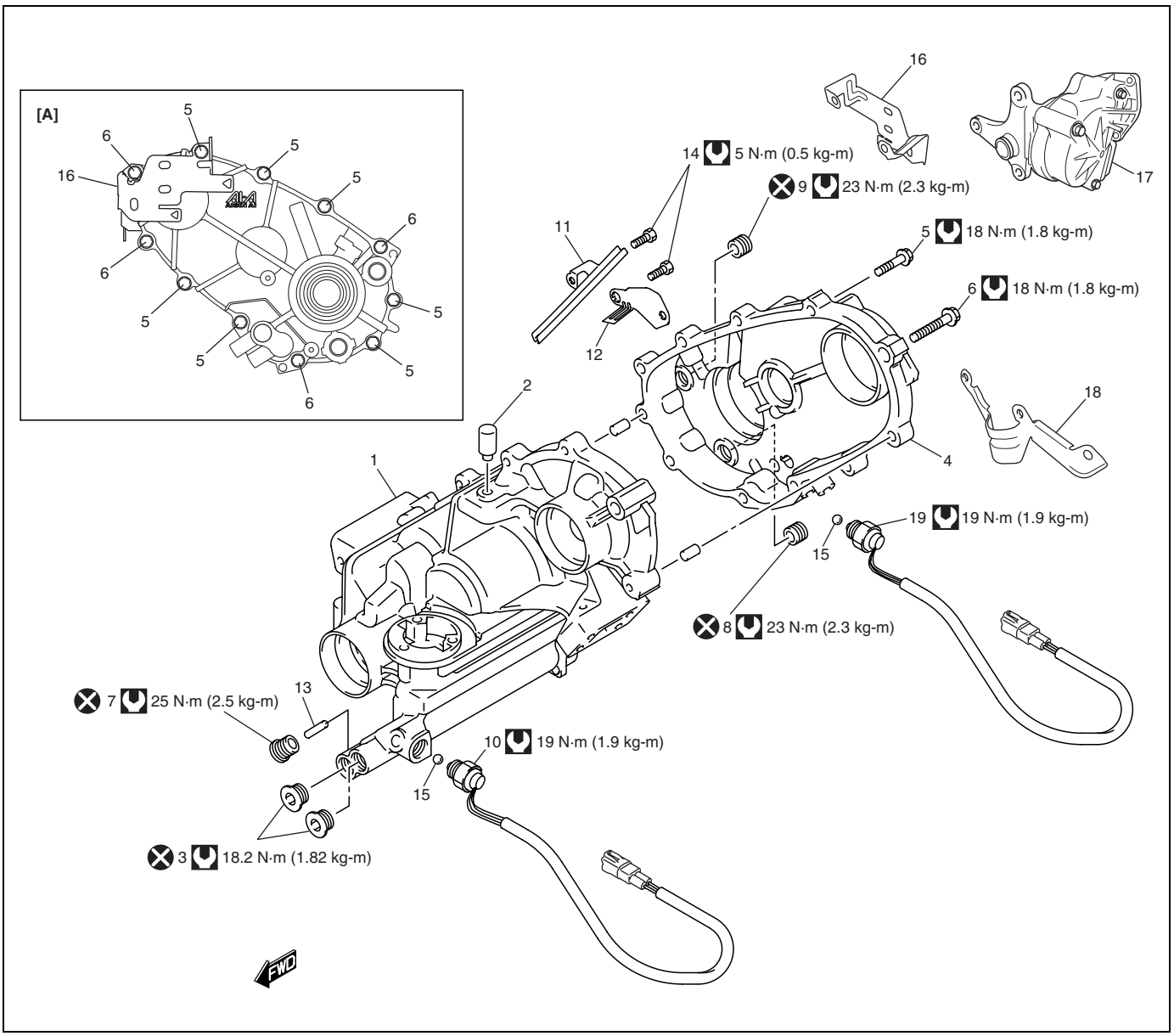

[A]: Transfer case bolt location	8. Oil drain plug	16. Harness connector bracket
1. Front case	9. Oil level / filler plug	17. Transfer shift actuator
2. Plug	10. 4WD switch (gray connector)	18. Switch cover
3. Locating plug	11. Oil receiver	19. 4WD low switch (white connector)
4. Rear case	12. Oil protect plate	Tightening torque
5. Transfer case bolt (short)	13. Straight pin	Do not reuse.
6. Transfer case bolt (long)	14. Transfer oil protect plate bolt	
7. Straight pin plug	15. Steel ball	

Transfer gear component

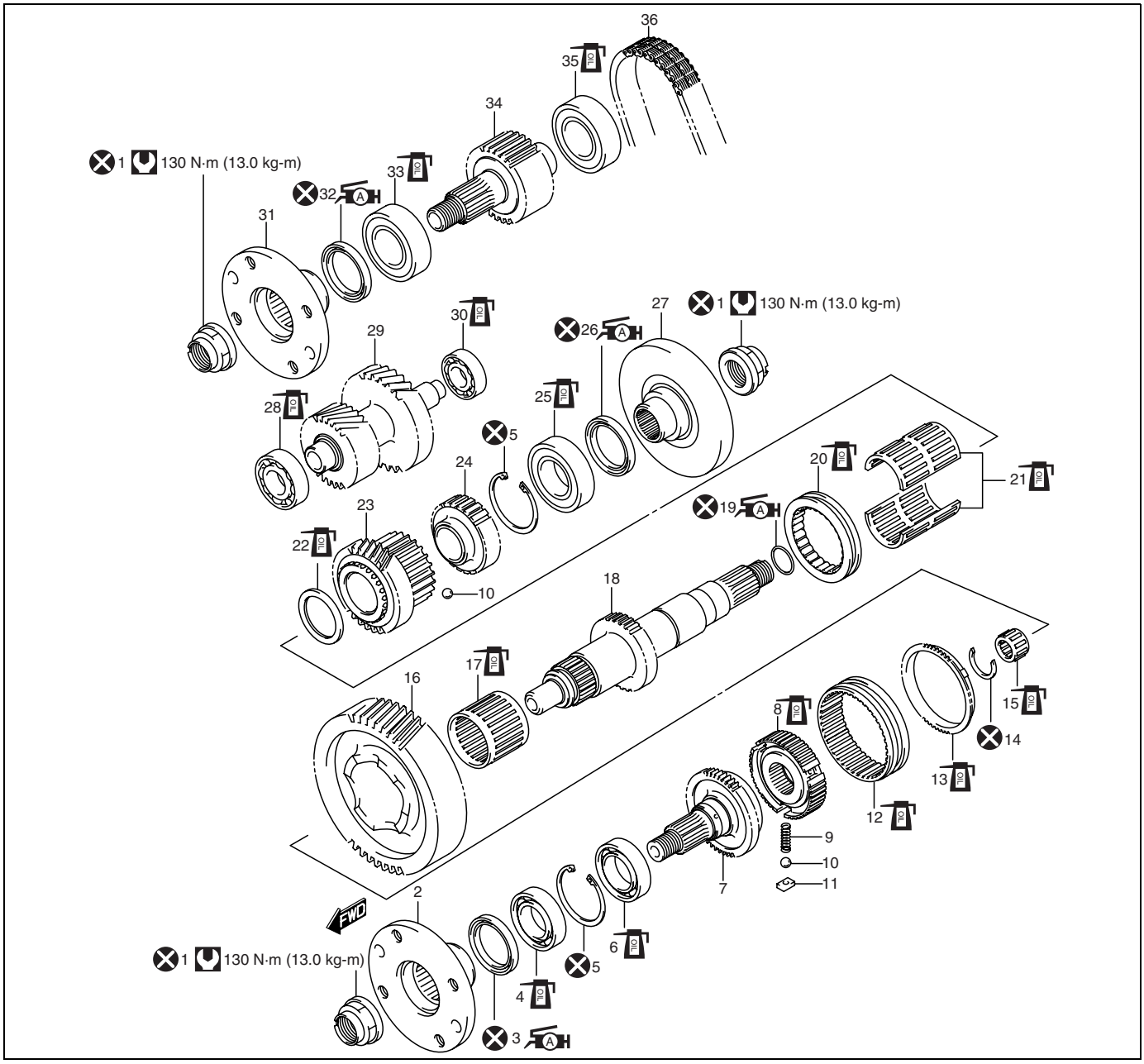

1. Flange nut	14. Output shaft snap ring	27. Rear flange
2. Output front flange	15. Output front shaft bearing	28. Counter gear No.1 bearing
3. Front case No.1 oil seal : Apply grease 99000-25010 to oil seal lip.	16. Output low gear	29. Counter gear
4. Front case No.1 bearing	17. Output rear shaft No.1 bearing	30. Counter gear No.2 bearing
5. Circlip	18. Output rear shaft	31. Input front flange
6. Output front shaft bearing	19. O-ring : Apply grease 99000-25010 to all around surface.	32. Front case No.2 oil seal : Apply grease 99000-25010 to oil seal lip.
7. Output front shaft	20. Reduction clutch sleeve	33. Front case No.2 bearing
8. Front drive clutch hub	21. Output rear shaft No.2 bearing	34. Input shaft
9. Key spring	22. Thrust bearing	35. Input shaft bearing
10. Steel ball	23. Sprocket output gear	36. Drive chain
11. Key	24. VSS rotor	Do not reuse.
12. Front drive clutch hub sleeve	25. Rear case bearing	Tightening torque
13. Synchronizer ring	26. Rear case oil seal : Apply grease 99000-25010 to oil seal lip.	Apply transfer gear oil

Transfer shift shaft component

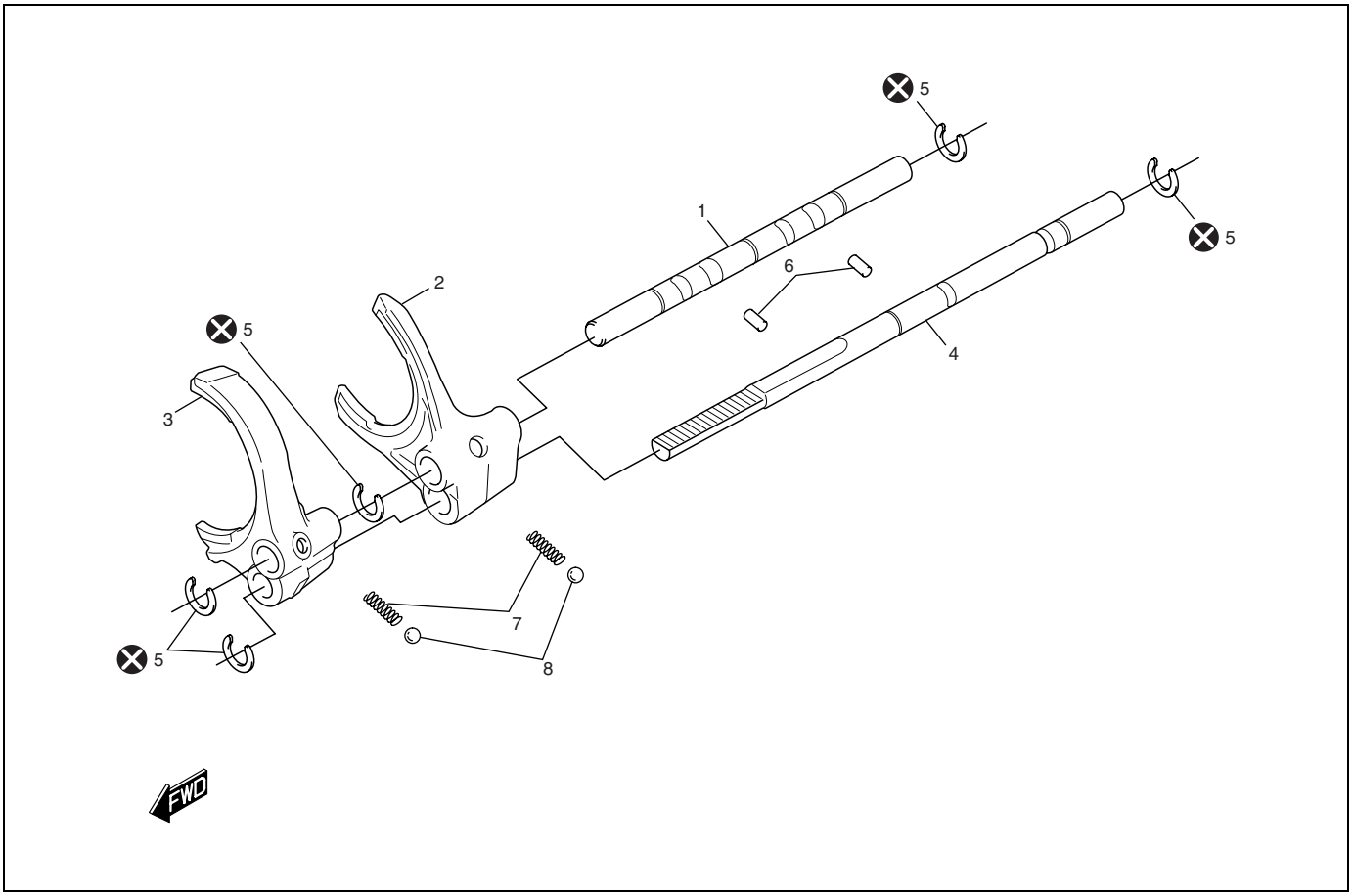

1. Shift fork shaft No.2	4. Shift fork shaft No.1	7. Spring
2. High & low shift fork	5. Snap ring	8. Ball
3. Front drive gear shift fork	6. Straight pin	⊗ Do not reuse.

Transfer Unit Disassembly and Reassembly

Disassembly

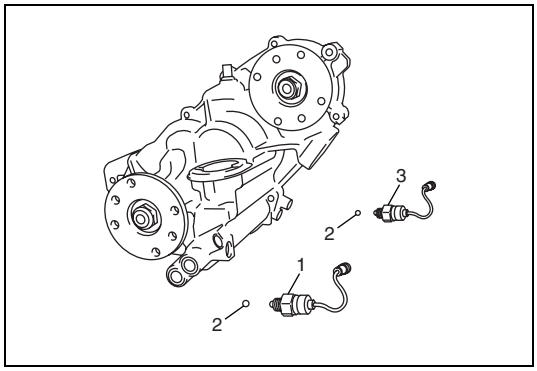

1) Remove 4WD switch (1) and 4WD low switch (3), and then take out steel balls (2).

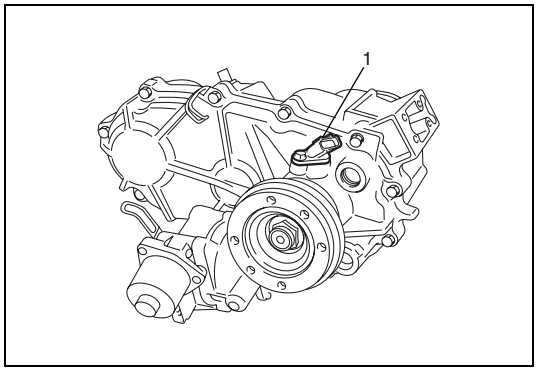

2) Remove VSS (1) from transfer.

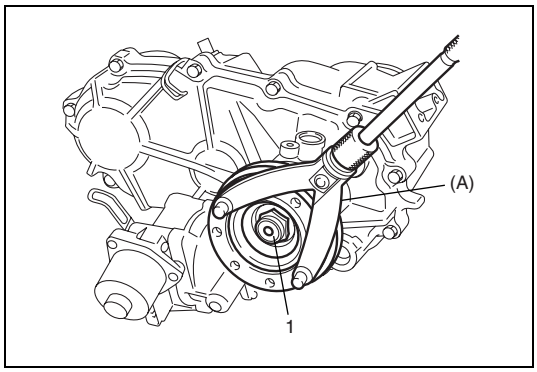

3) Remove rear flange. To lock flange, use special tool. With flange locked, remove flange nut (1).

Special tool
(A): 09930-40113

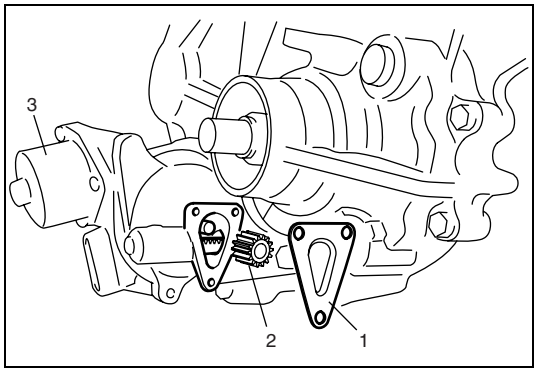

4) Remove case cover (1) and pinion gear (2), and then remove transfer shift actuator (3).

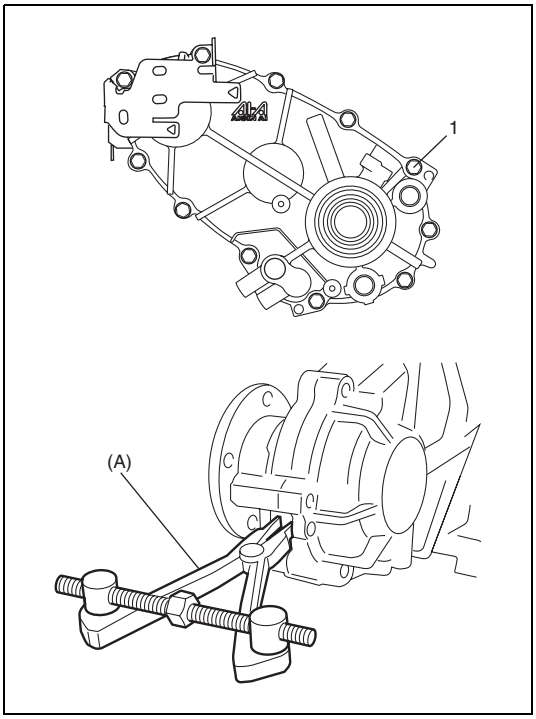

5) Remove 11 rear case bolts (1), and then separate front and rear cases using special tool.

NOTE:

To separate cases, use special tool at 2 points in turn and make opening wider evenly.

Special tool
(A): 09912-34510

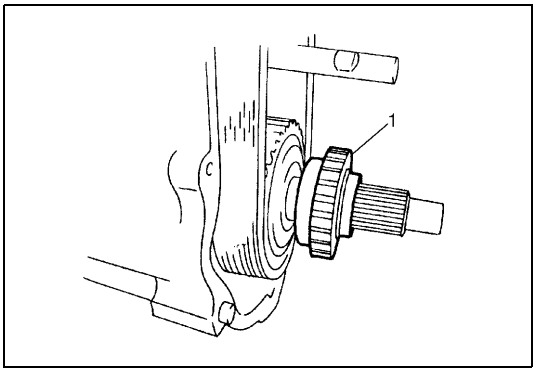

6) Pull out VSS rotor (1) and steel ball.

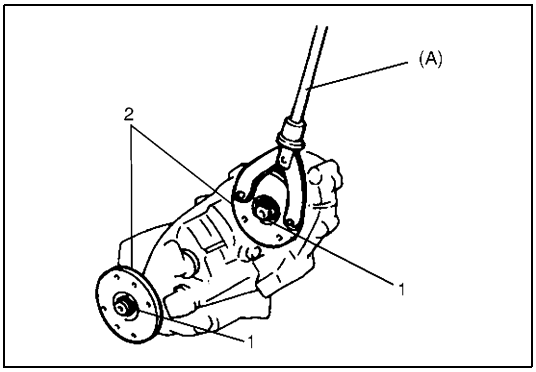

7) Remove front flanges (2). To lock flange, use special tool. With flange locked, remove flange nut (1).

Special tool
(A): 09930-40113

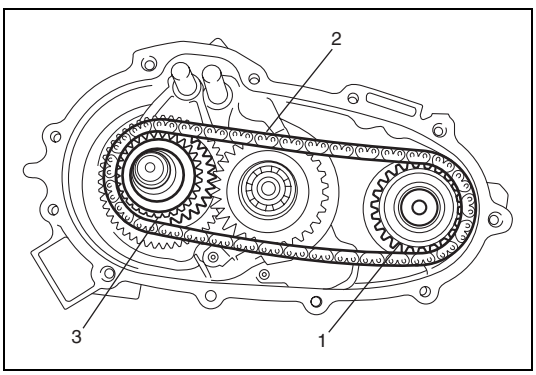

8) Remove drive chain (2), input shaft (1), and sprocket output gear (3) as an assembly.

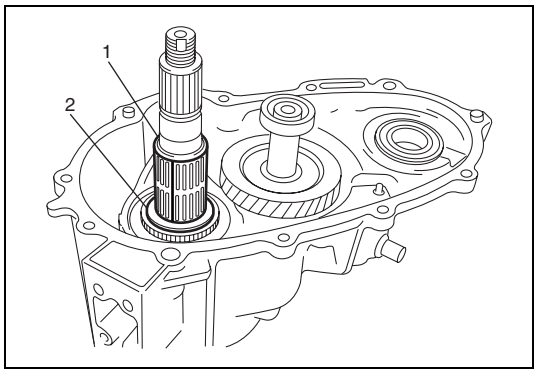

9) Remove needle roller bearings (1) and thrust bearing (2).

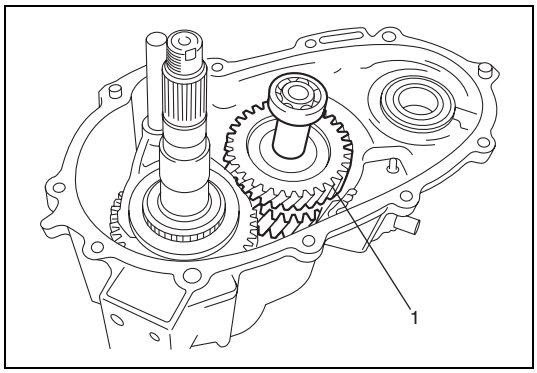

10) Remove counter gear assembly (1) from front case.

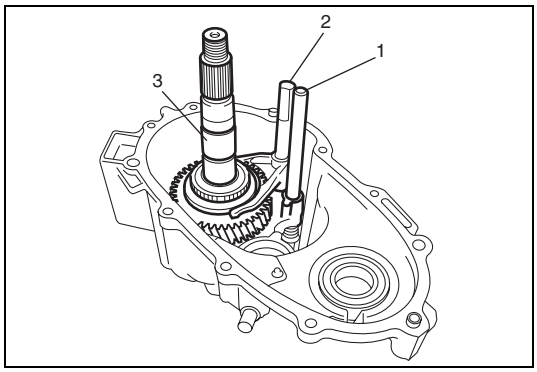

11) Remove output rear shaft assembly (3) with shift fork shaft No.1 (1) and No.2 (2) all at once.

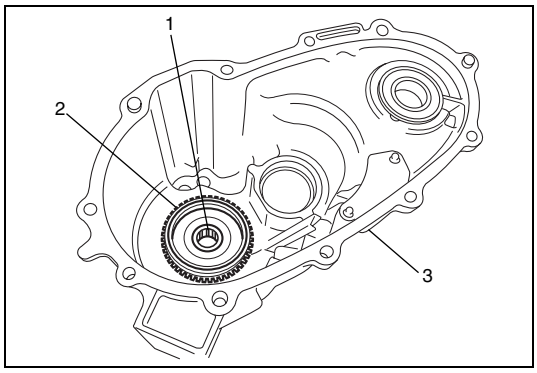

12) Remove needle roller bearing (1) and synchronizer ring (2) from front case (3).

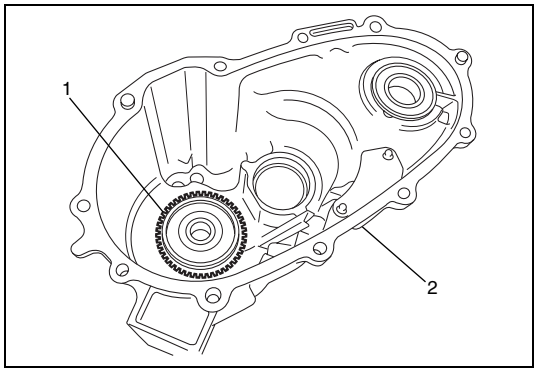

13) Remove output front shaft assembly (1) from front case (2).

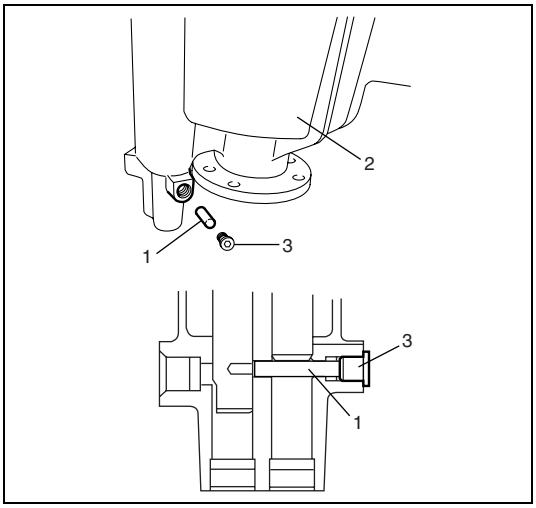

14) Remove straight pin (1) and straight pin plug (3) from front case (2) as shown in figure.

Reassembly

1) Install output front shaft to front case.

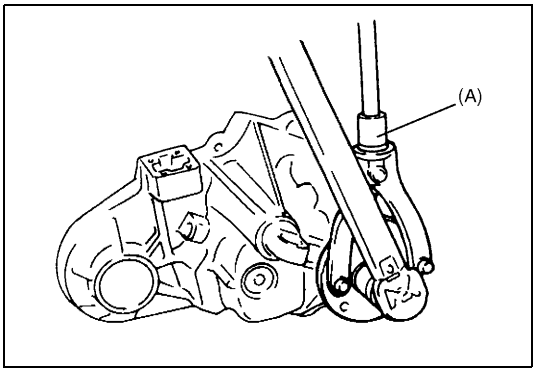

2) Install output front flange, tighten new flange nut with flange locked by special tool.

Special tool
(A): 09930-40113

Tightening torque
Flange nut: 130 N·m (13.0 kg-m, 94 lb-ft)

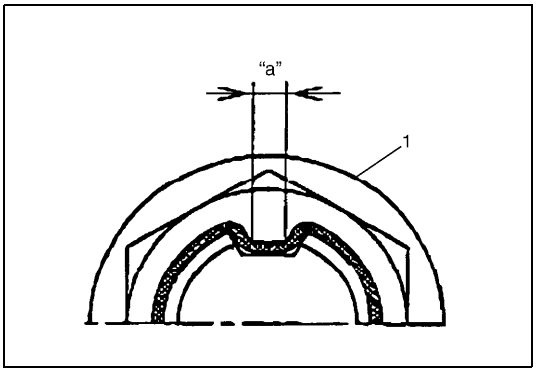

CAUTION:
Be sure to caulk flange nut on the output front shaft groove securely as shown in figure.
If not, it may cause for loosening flange nut.

3) Caulk flange nut (1).

"a": 3.8 mm (0.15 in.) or more

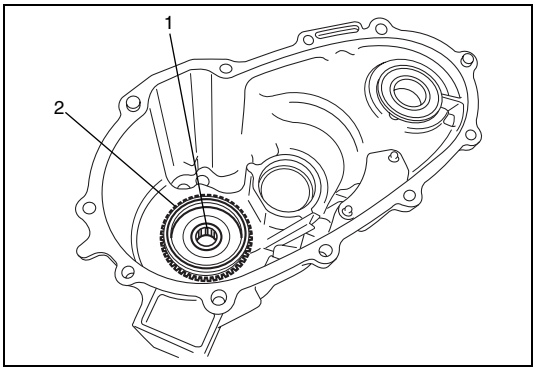

4) Apply transfer gear oil to needle roller bearing (1) and synchronizer ring (2), and then install them to output front shaft.

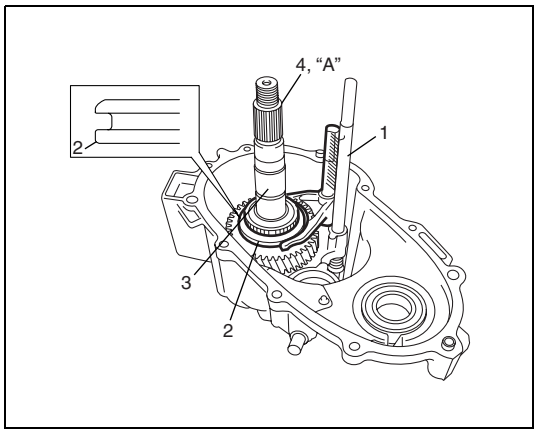

5) Join output rear shaft assembly (3), shift fork shaft assembly (1) and reduction clutch sleeve (2) all together, and then install them to front case.

NOTE:

Be sure to install clutch sleeve (2) to proper direction as shown in figure.

6) Apply grease to new O-ring (4), and then install it to output rear shaft (3).

"A": Grease 99000-25010

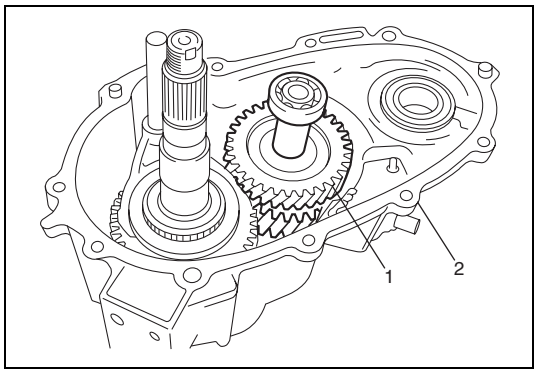

7) Install counter gear assembly (1) to front case (2).

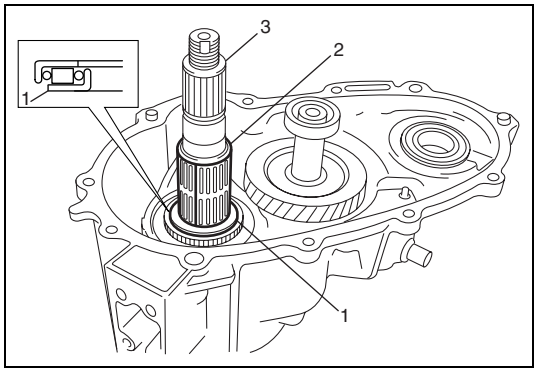

8) Apply transfer gear oil to thrust bearing (1) and needle roller bearing (2), and then install them to output rear shaft (3).

NOTE:

Be sure to install thrust bearing (1) to proper direction as shown in figure.

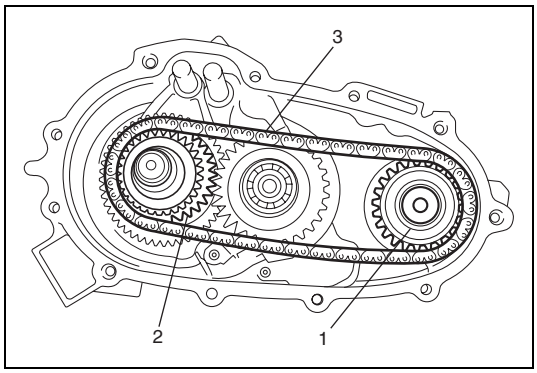

9) Install input shaft (1), sprocket output gear (2) and drive chain (3) as an assembly to front case.

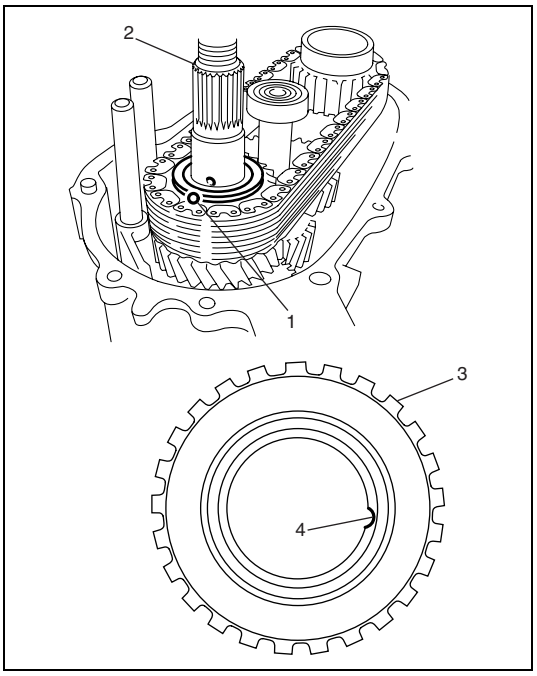

10) Install steel ball (1) to output rear shaft (2), and then install VSS rotor (3) to output shaft aligning its slot (4) with steel ball.

NOTE:

Turn VSS rotor, and check to rotate together with output rear shaft.

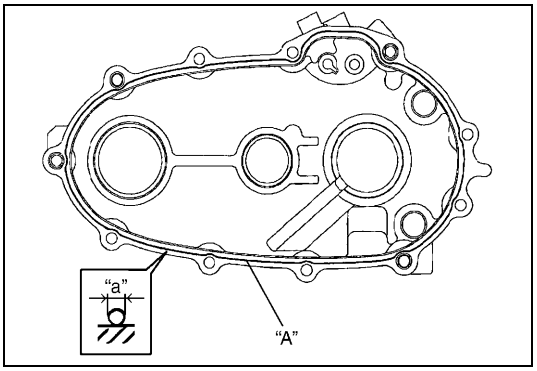

11) After cleaning mating surfaces of both cases, coat mating surface of front case with sealant evenly and put it over rear case.

"A": Sealant 99000-31260

Sealant amount
Diameter "a": 1.2 mm (0.05 in.)

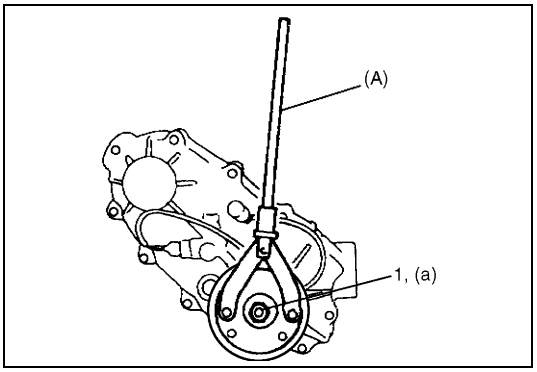

12) Align front case and rear case, then install rear flange, tighten new flange nut (1) with flange locked by special tool.

Special tool
(A): 09930-40113

Tightening torque
Flange nut (a): 130 N·m (13.0 kg-m, 94.0 lb-ft)

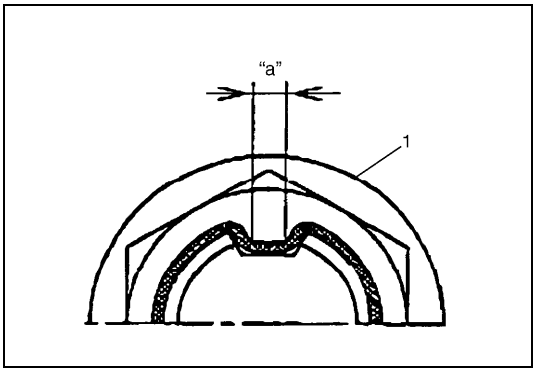

CAUTION:

Be sure to caulk flange nut on the output rear shaft groove securely as shown in figure.
If not, it may cause for loosening flange nut.

13) Caulk flange nut (1).

"a": 3.8 mm (0.15 in.) or more

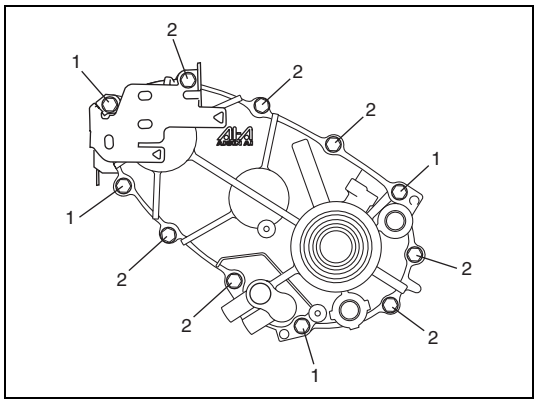

14) Tighten 11 case bolts.

Tightening torque
Transfer case bolt (a): 18 N·m (1.8 kg-m, 13.0 lb-ft)

1.	Long bolt
2.	Short bolt

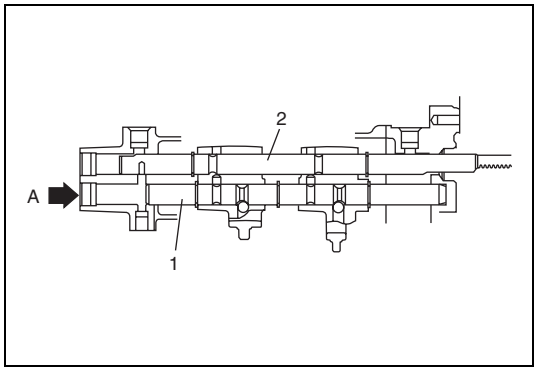

15) Push in shift fork shaft No.2 (1) in the direction of A to be set at 4H shift position.

2.	Shift fork shaft No.1

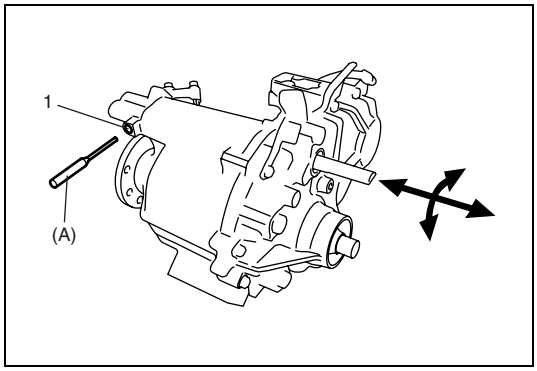

16) Insert special tool into hole (1) to fix shaft.

Special tool
(A): 09922-89810

NOTE:

Move shift shaft No.1 pushing special tool as shown in figure to facilitate installation.

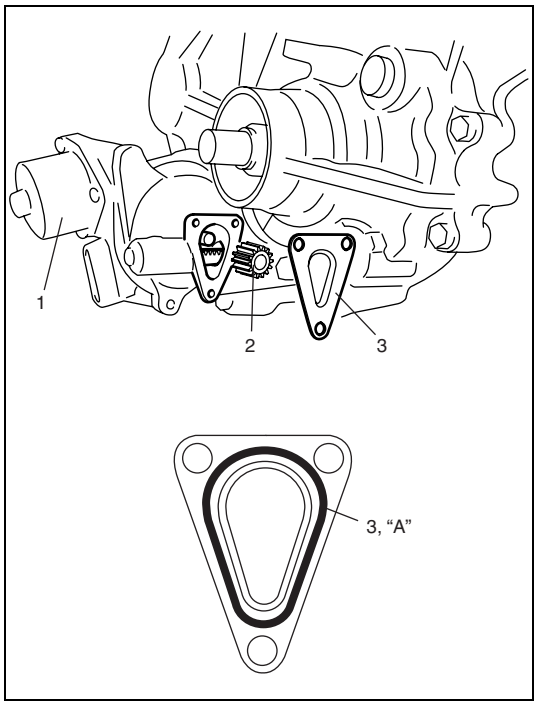

17) Install transfer shift actuator (1) and pinion gear (2), and then clean mating surfaces of both shift actuator and case cover (3), apply sealant to case cover as shown in figure by such amount that its section is 1.2 mm (0.047in.) in diameter then mate it with left case and then remove special tool.

"A": Sealant 99000-31260

NOTE:

Check whether actuator is at 4H position, otherwise set it at 4H position referring to "Transfer Shift Actuator Inspection" in this section.

Tightening torque
Transfer shift actuator bolt: 20 N·m (2.0 kg-m, 14.5 lb-ft)

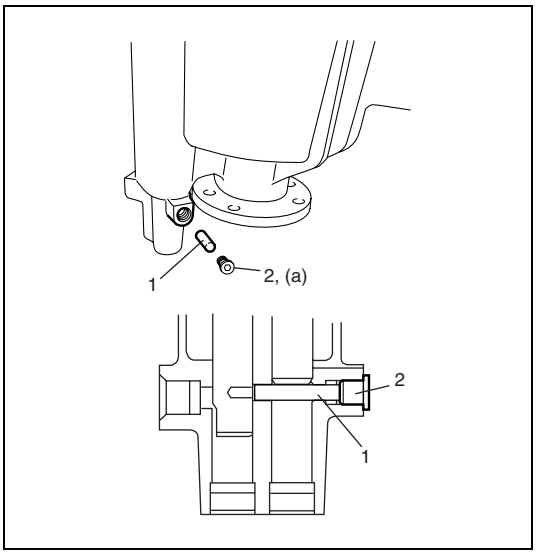

18) Remove special tool, and then install straight pin (1) and new straight pin plug (2).

Tightening torque
Straight pin plug (a): 25 N·m (2.5 kg-m, 18.0 lb-ft)

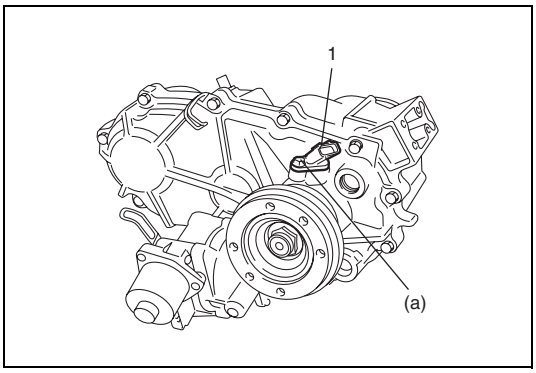

19) Install VSS (1) with new O-ring.

Tightening torque
VSS bolt (a): 5 N·m (0.5 kg-m, 3.5 lb-ft)

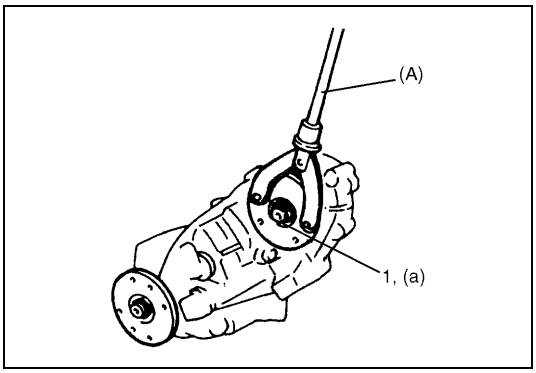

20) Install input front flange, tighten new flange nut (1) with flange locked by special tool.

Special tool
(A): 09930-40113

Tightening torque
Flange nut (a): 130 N·m (13.0 kg-m, 94.0 lb-ft)

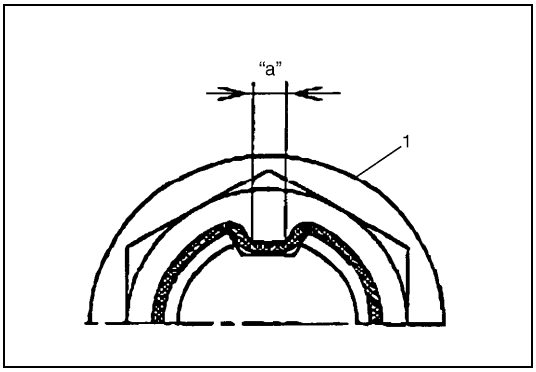

CAUTION:
Be sure to caulk flange nut on the input shaft groove securely as shown in figure.
If not, it may cause for loosening flange nut.

21) Caulk flange nut (1).

"a": 3.8 mm (0.15 in.) or more

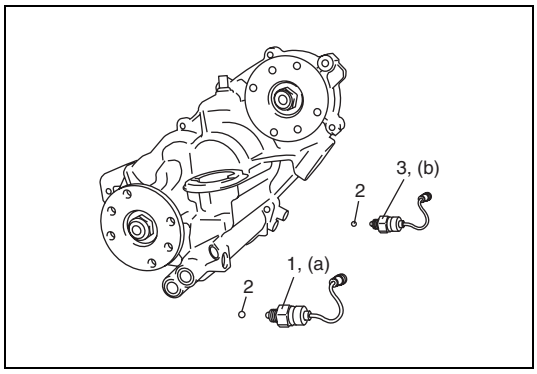

22) Install steel ball (2), 4WD switch (1) and 4WD low switch (3).

Tightening torque
4WD switch (a): 19 N·m (1.9 kg-m, 14.0 lb-ft)
4WD low switch (b): 19 N·m (1.9 kg-m, 14.0 lb-ft)

Transfer Shift Actuator Inspection

Inspect operation of transfer shift actuator as follows.
If actuator does not work correctly, replace actuator assembly.

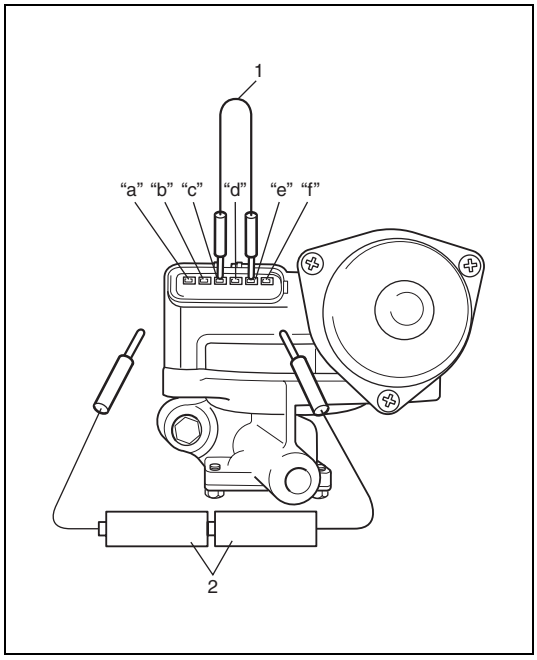

1) Remove transfer shift actuator referring to "Transfer Unit Disassembly and Reassembly" in this section.
2) Connect 2 dry cell batteries in series.
3) Connect battery (+) to "a", (–) to "f" and service wire (1) to "c" and "e" respectively, then change motor position from 4H to 4L.
4) Connect battery (+) to "f", (–) to "d" and service wire (1) to "c" and "e" respectively, then change motor position from 4L to 4H.
5) Connect battery (+) to "f", (–) to "a" and service wire (1) to "c" and "e" respectively, then change motor position from 4H to 2H.
6) Connect battery (+) to "b", (–) to "f" and service wire (1) to "c" and "e" respectively, then change motor position from 2H to 4H.

2. Dry cell battery of 1.5 V

Limit switch circuit table

Transfer shift conditions	Continuity between terminals of shift actuator limit switch			
	a	b	c	d
Completion of 2H shift change	×	●	●	×
2H⇔4H shifting	●	●	●	×
Completion of 4H shift change	●	×	●	×
4H⇔4L shifting	●	×	●	●
Completion of 4L shift change	×	×	●	●

Transfer Inspection

- Check each bearing for smooth rotation.
  If found abnormal, replace.
- Check needle bearing and bearing contacting surface for damage. Replace as required.
- Check drive chain and sprockets for abnormal wear or damage. Replace as required.
- Check oil seal for leakage and its lip for excessive hardness.
  If either is found, replace.
  Also, check corresponding surface of shaft where oil seal lip contacts. Correct or replace as necessary.

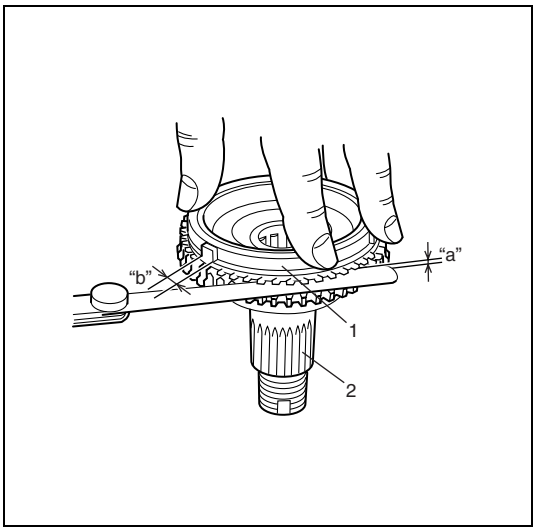

- Check clearance "a" between synchronizer ring (1) and output front shaft (2), protruding portion width "b" in synchronizer ring and each chamfered tooth of gear and synchronizer ring and synchronizer ring and replace with new one, if necessary. Also, check gear tooth.
  If protruding portion "b" is out of specification, replace synchronizer ring.

Clearance "a" between synchronizer ring and output front shaft
Standard: 0.83 – 1.53 mm (0.033 – 0.060 in.)
Service limit: 0.6 mm (0.024 in.)

Protruding portion width "b":
6.4 – 6.6 mm (0.252 – 0.260 in.)

Front Case Assembly Disassembly and Reassembly

CAUTION:
Pave waste cloth under case in order to prevent mating surface from damage.

Disassembly

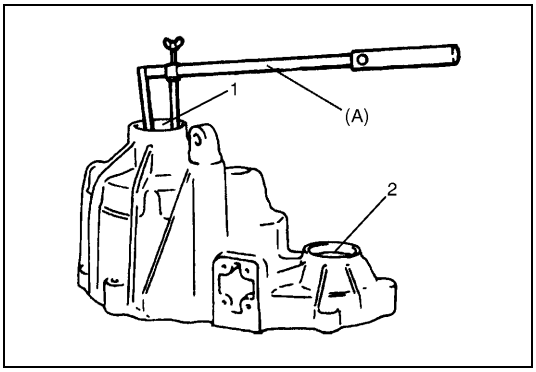

1) By using special tool, remove front case No.1 oil seal (1) and front case No.2 oil seal (2) from front case.

Special tool
(A): 09913-50121

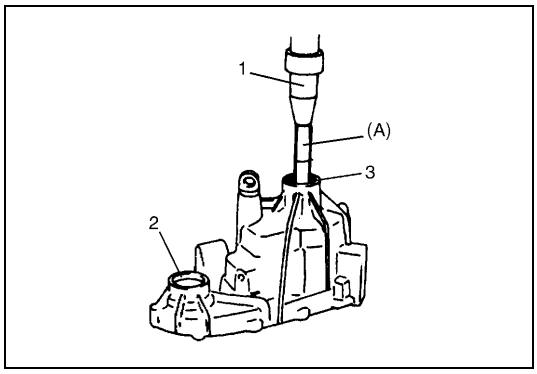

2) Remove circlip, and then remove front case No.1 bearing (3) from front case using special tool and hydraulic press (1).

Special tool
(A): 09913-75830

3) Remove front case No.2 bearing (2) from front case using special tool and hydraulic press (1).

Special tool
(A): 09913-75830

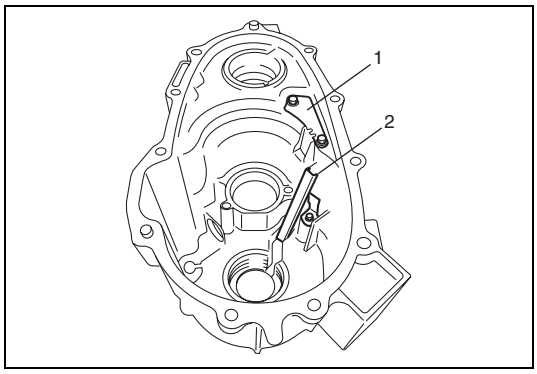

4) Remove oil protect plate (1) and oil receiver (2) from front case, if necessary.

Reassembly

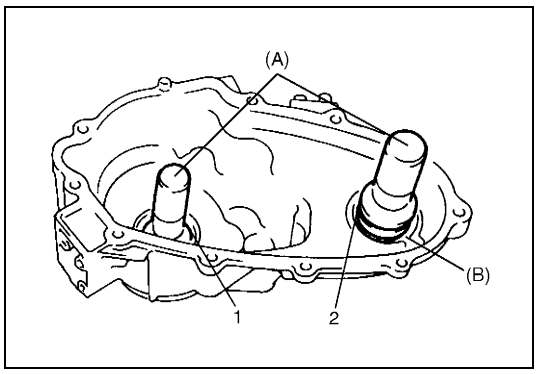

1) Install front case No.1 bearing (1) and front case No.2 bearing (2) to front case using special tools and hammer.

Special tool
(A): 09913-75810
(B): 09944-66020

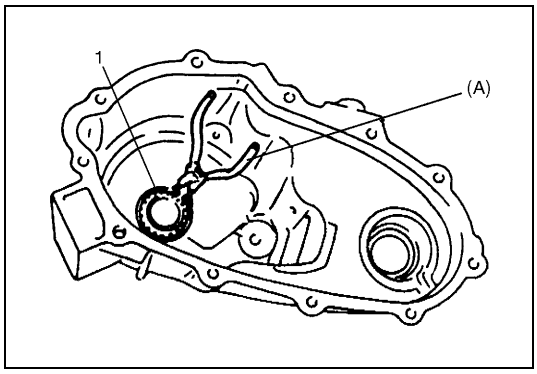

2) Fix front case No.1 bearing with new circlip (1) using special tool.

Special tool
(A): 09900-06108

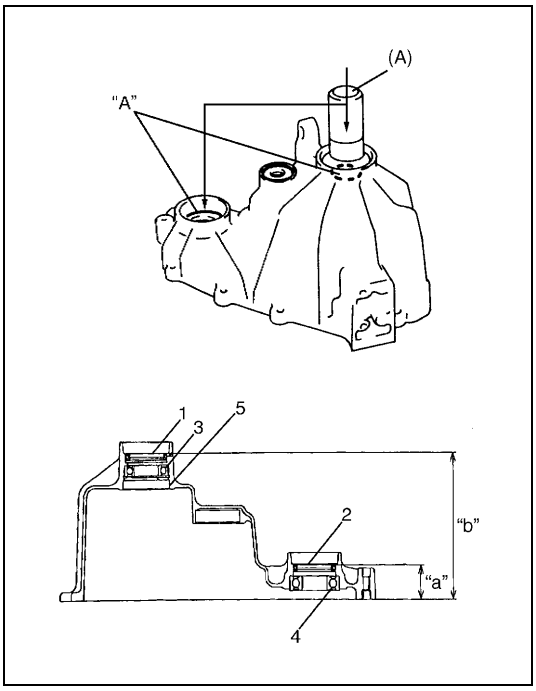

3) By using special tool and hummer, install front case No.1 oil seal (1) and front case No.2 oil seal (2) to front case at specified position as shown in figure. Apply grease to each oil seal lip.

Special tool
(A): 09913-75810

"A": Grease 99000-25010

Transfer front case oil seal installing position
"a": 38.2 – 39.2 mm (1.50 – 1.54 in.)
"b": 164.3 – 165.3 mm (6.47 – 6.51 in.)

3. Front case No.1 bearing
4. Front case No.2 bearing
5. Circlip

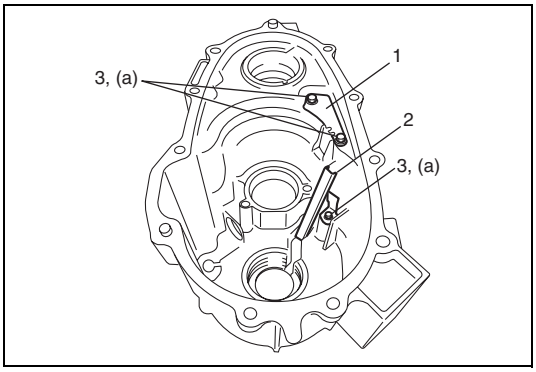

4) Install transfer oil protect plate (1) and transfer oil receiver (2) to front case.

Tightening torque
Transfer oil protect plate bolt (a): 5 N·m (0.5 kg-m, 3.5 lb-ft)

3. Transfer oil protect plate bolt

Rear Case Assembly Disassembly and Reassembly

CAUTION:
Pave waste cloth under case in order to prevent mating surface from damage.

Disassembly

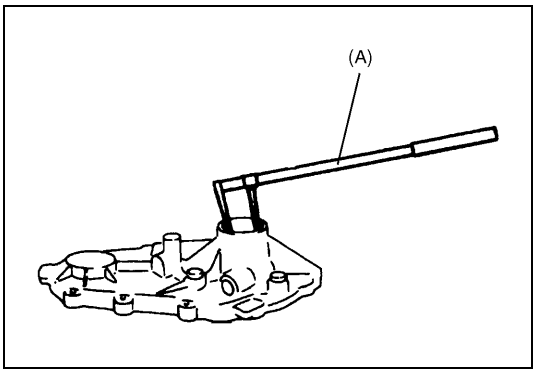

1) Remove rear case oil seal from rear case using special tool.

Special tool
(A): 09913-50121

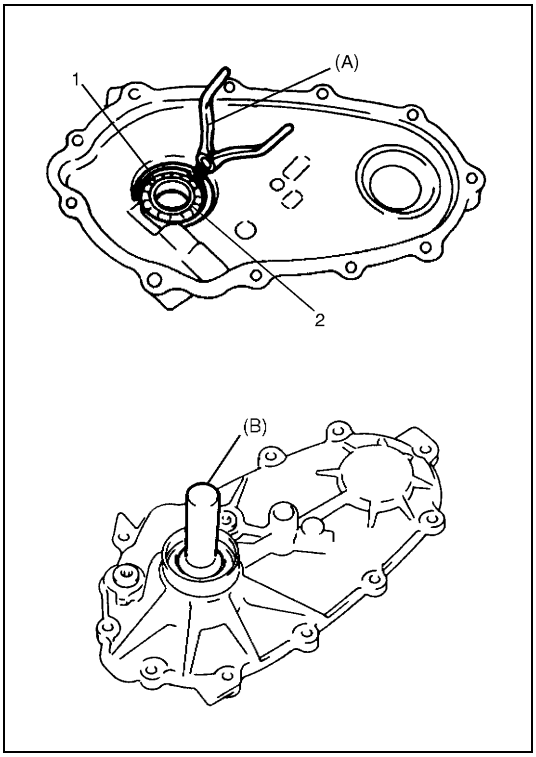

2) Remove circlip (1) using special tool (A), and then remove rear case bearing (2) using special tool (B).

Special tool
(A): 09900-06108
(B): 09913-75830

Reassembly

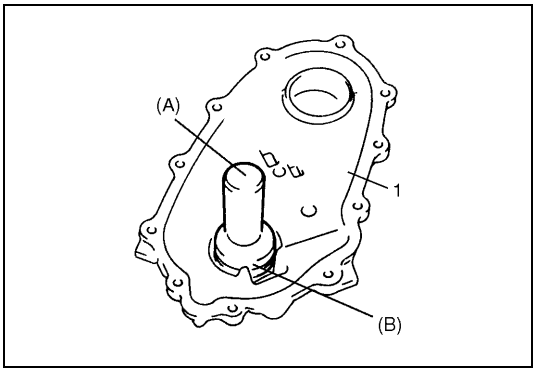

1) Install rear case bearing to rear case (1) using special tool and hammer, and fix it with new circlip.

Special tool
(A): 09913-75810
(B): 09944-66020

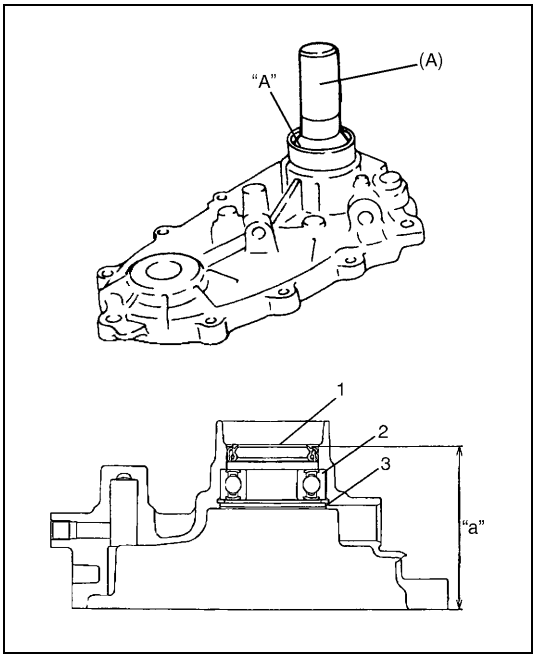

2) Using special tool and hammer, install rear case oil seal (1) to rear case at specified position. Apply grease to oil seal lip.

Special tool
(A): 09913-75810

"A": Grease 99000-25010

Transfer rear case oil seal installing position
"a": 83.9 – 84.9 mm (3.30 – 3.34 in.)

2. Rear case bearing
3. Circlip

Transfer Input Shaft Assembly Disassembly and Reassembly

Disassembly

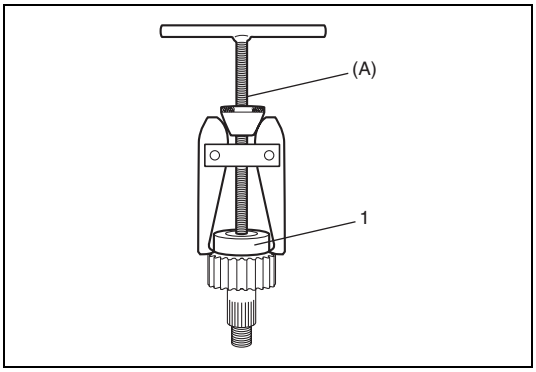

1) Pull out input shaft bearing (1) from input shaft using special tool.

Special tool
(A): 09913-60910

Reassembly

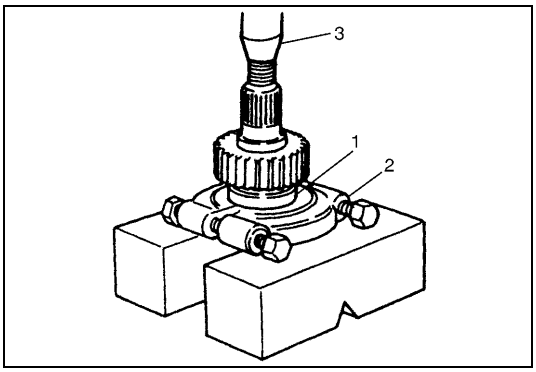

CAUTION:
Be sure to fit bearing puller at inner race of bearing in order to prevent bearing from damage.

1) Press fit input shaft bearing (1) to input shaft using bearing puller (2) and hydraulic press (3).

Transfer Counter Gear Assembly Disassembly and Reassembly

Disassembly

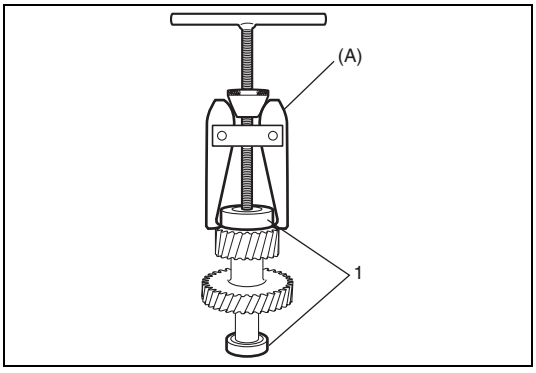

1) Pull out counter gear bearings (1) using special tool.

Special tool
(A): 09913-60910

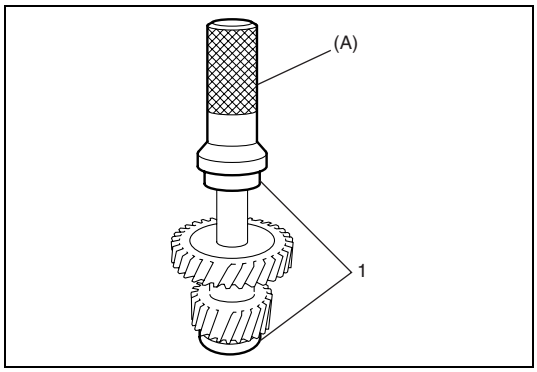

Reassembly

1) Press fit counter gear bearings (1) to counter gear respectively using special tool and hydraulic press.

Special tool
(A): 09913-70123

Shift Fork Shaft Assembly Disassembly and Reassembly

Disassembly

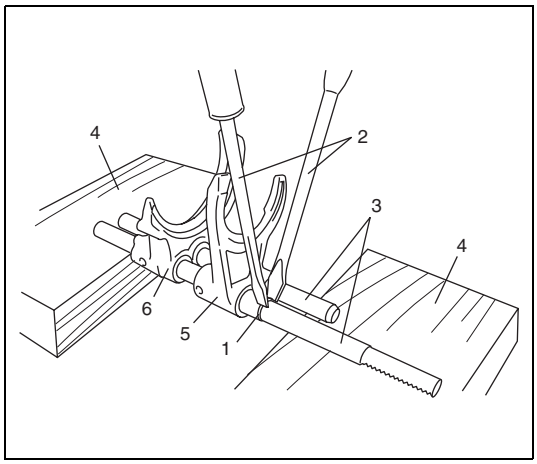

CAUTION:
Support shift fork shafts (3) with wood blocks (4) as shown in figure in order to prevent it from damage.

1) Remove snap rings (1) using flat end rods (2) or the like.

CAUTION:
When removing shaft, put cloth on it to prevent balls and springs from scattering.

2) Remove high & low shift fork (5) and front drive gear shift fork (6) from shift fork shafts.

Reassembly

Reverse disassembly procedure for reassembly noting the following point.

Shift Fork Shaft Assembly Inspection

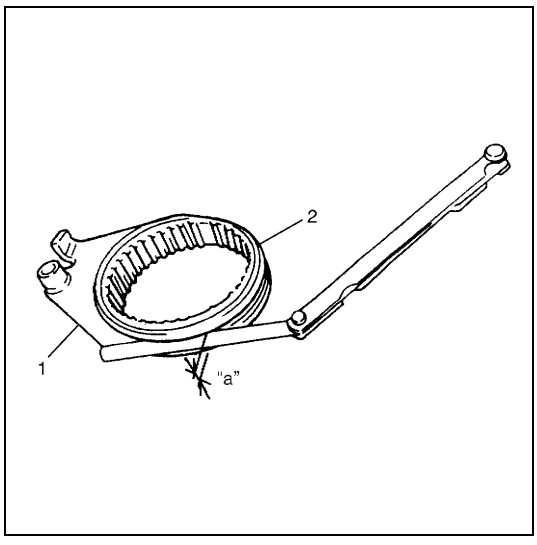

- Using feeler gauge, check clearance between high & low shift fork (1) and reduction clutch sleeve (2).
  If clearance "a" is out of specification, replace reduction clutch sleeve and high & low shift fork.

Clearance Between Reduction Clutch Sleeve and High & Low Shift Fork "a": 0.1 – 0.4 mm (0.004 – 0.015 in.)

- Using feeler gauge, check clearance between front drive gear shift fork (1) and front drive clutch hub sleeve (2).
  If clearance "a" is out of specification, replace front drive clutch hub sleeve and front drive gear shift fork.

Clearance Between Front Drive Clutch Hub Sleeve and Front Drive Gear Shift Fork "a":
0.15 – 0.35 mm (0.006 – 0.013 in.)

Transfer Output Rear Shaft Assembly Disassembly and Reassembly

Disassembly

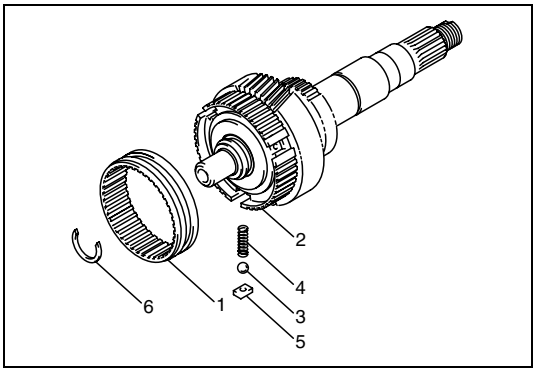

1) Pull out front drive clutch hub sleeve (1) from front drive clutch hub (2) gradually with holding down steel balls (3) in order to prevent steel balls and springs (4) from jumping out.
2) Remove snap ring (6) from output rear shaft.

5. Key

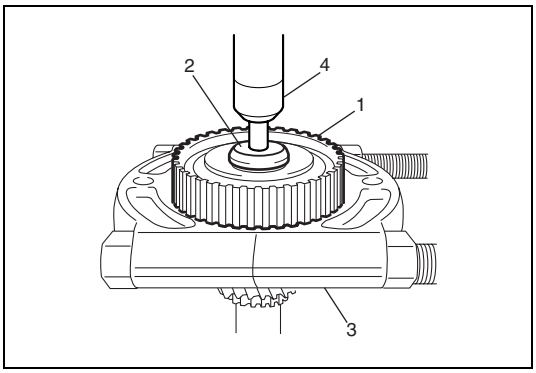

CAUTION:
To avoid gear teeth from being damaged, support it at flat side of bearing puller.

3) Drive out output low gear (1) from output rear shaft (2) using bearing puller (3) and hydraulic press (4).

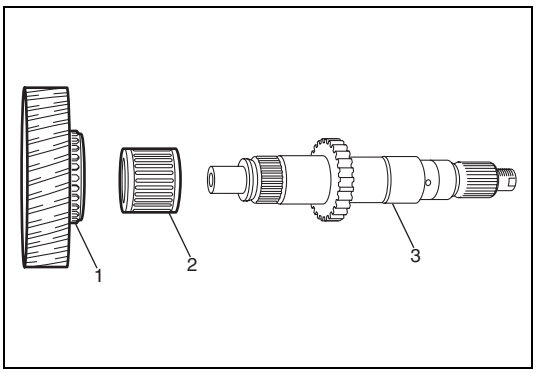

4) Remove output low gear (1) and needle roller bearing (2) from output rear shaft (3).

Reassembly

NOTE:

Install front drive clutch hub and front drive clutch hub sleeve, and check to move smoothly.

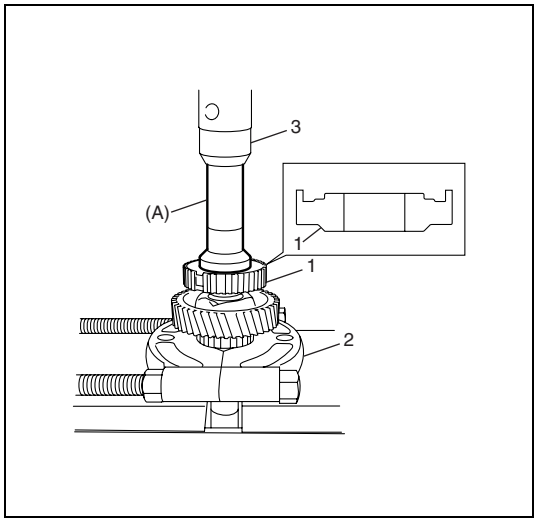

CAUTION:

To avoid gear teeth from being damaged, support it at flat side of bearing puller.

1) Press fit front drive clutch hub (1) using special tool, bearing puller (2) and hydraulic press (3).

Special tool
(A): 09913-70123

NOTE:

Be sure to install front drive clutch hub (1) to proper direction as shown in figure.

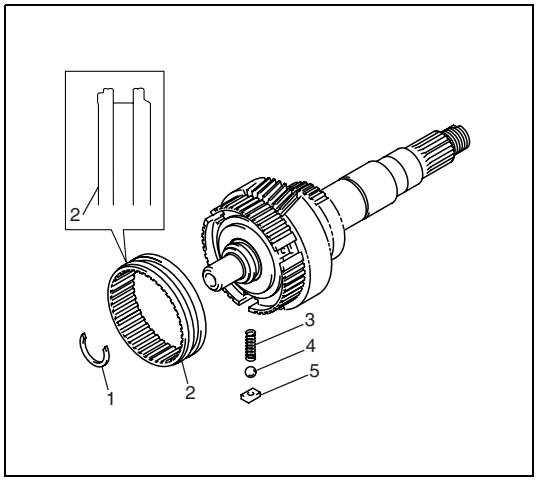

2) Install front drive clutch hub sleeve (2), and then install steel balls (4), key springs (3) and keys (5).

NOTE:

Be sure to install front drive clutch hub sleeve (2) to proper direction as shown in figure.

3) Install applicable output shaft snap ring (1) according to "Output Shaft Snap Ring Adjustment" in this section.

NOTE:

After assembly check that each gear moves smoothly.

Transfer Output Front Shaft Assembly Disassembly and Reassembly

Disassembly

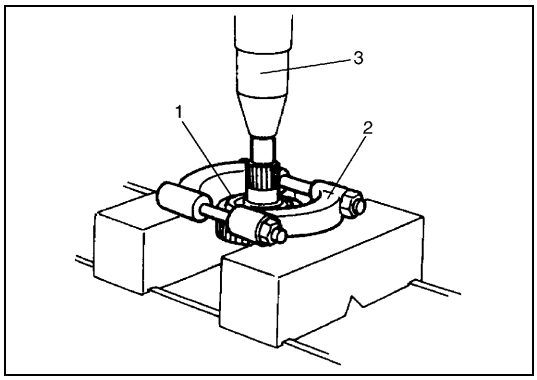

1) Pull out output front shaft bearing (1) using bearing puller (2) and hydraulic press (3).

Reassembly

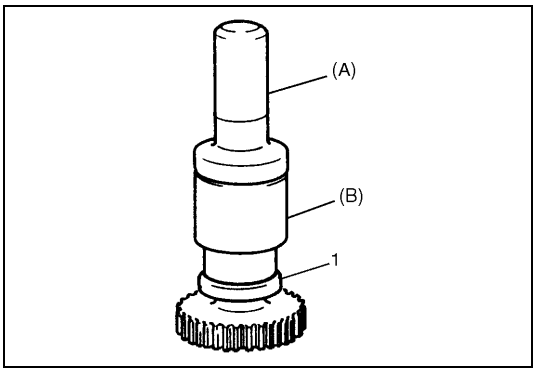

1) By using special tools and hydraulic press, install output front shaft bearing (1) to output front shaft.

Special tool
(A): 09913-75520
(B): 09940-53111

Output Shaft Snap Ring Adjustment

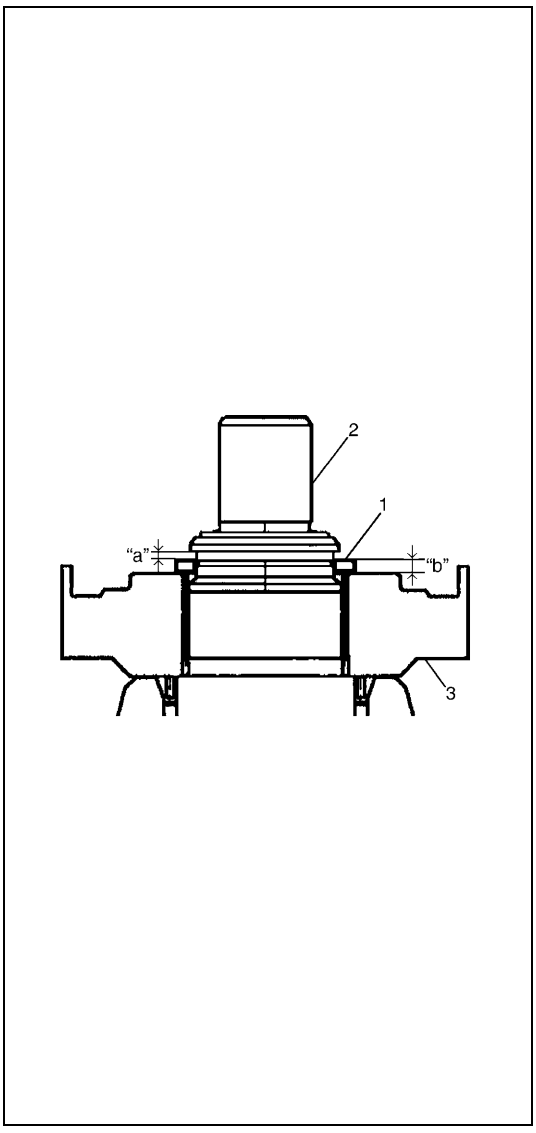

1) Install removed output shaft snap ring to output shaft.
2) Measure clearance "a" between snap ring (1) and end face of output rear shaft (2).
3) Remove snap ring, and then measure removed snap ring thickness "b".
4) Obtain adjusting snap ring thickness "c" by the following equation.

"c" = "a" + "b" – 0.05 mm (0.002 in.)

5) Select snap ring with a thickness nearest calculated snap ring thickness "c" by the following.
6) Install selected snap ring to output shaft.
7) Check clearance "a" between snap ring and end face of output rear shaft, again. If it is more than 0.11 mm (0.004 in.), repeat step 2) through 7).

Available snap ring thickness

Identification mark	Thickness
0	2.30 mm (0.091 in.)
1	2.36 mm (0.093 in.)
2	2.42 mm (0.095 in.)
3	2.48 mm (0.098 in.)
4	2.54 mm (0.100 in.)
5	2.60 mm (0.102 in.)
6	2.12 mm (0.083 in.)
7	2.18 mm (0.086 in.)
8	2.24 mm (0.088 in.)

3. Front drive clutch hub

Special Tool

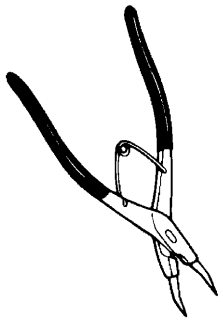 09900-06108 Snap ring plier (Closing type)	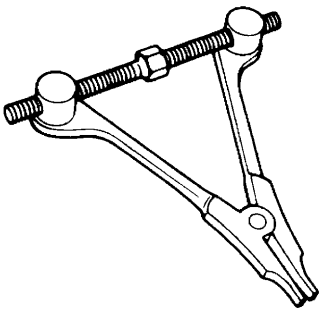 09912-34510 Separator	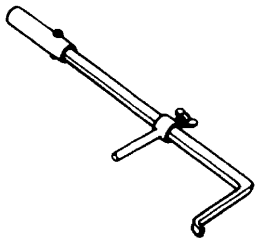 09913-50121 Oil seal remover	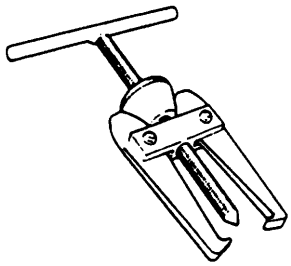 09913-60910 Bearing puller
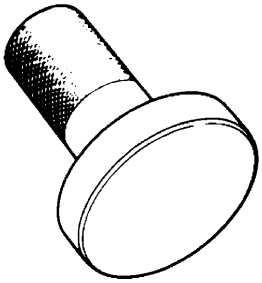 09913-75520 Bearing installer	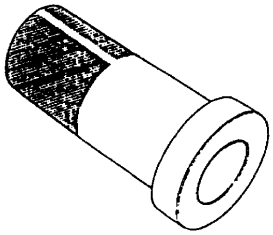 09913-75810 Bearing installer	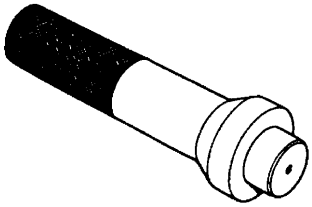 09913-75830 Bearing installer	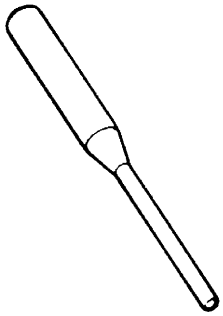 09922-89810 Shifter lock pin remover
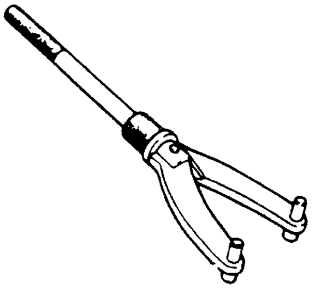 09930-40113 Flange holder	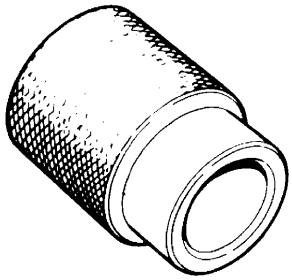 09940-53111 Differential side bearing installer	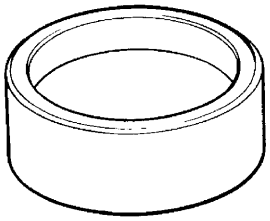 09944-66020 Bearing installer	

Tightening Torque Specification

Fastening part	Tightening torque		
	N•m	kg-m	lb-ft
Oil filler / level and drain plug	23	2.3	17.0
Transfer mounting nut	30	3.0	22.0
Transfer mounting bracket bolt	23	2.3	17.0
Flange nut	130	13.0	94.0
Transfer case bolt	18	1.8	13.0
4WD switch	19	1.9	14.0
4WD low switch	19	1.9	14.0
Straight pin plug	25	2.5	18.0
VSS bolt	5	0.5	3.5
Transfer oil protect plat bolt	5	0.5	3.5
Locating plug	18	1.8	13.0
Transfer shift actuator bolt	20	2.0	14.5

Required Service Material

Material	Recommended products (Part Number)	Use
Lithium grease	SUZUKI SUPER GREASE A (99000-25010)	• Oil seal lip • O-ring
Sealant	SUZUKI BOND NO. 1217G (99000-31260)	• Mating surface of front case • Case cover

SECTION 8

BODY ELECTRICAL SYSTEM

WARNING:

For vehicles equipped with a Supplement Restraint (Air Bag) System

- **Service on and around the air bag system components or wiring must be performed only by an authorized SUZUKI dealer. Refer to "Air Bag System Components and Wiring Location View" under "General Description" in air bag system section in order to confirm whether you are performing service on or near the air bag system components or wiring. Please observe all WARNINGS and "Service Precautions" under "On-Vehicle Service" in air bag system section before performing service on or around the air bag system components or wiring. Failure to follow WARNINGS could result in unintentional activation of the system or could render the system inoperative. Either of these two conditions may result in severe injury.**
- **Technical service work must be started at least 90 seconds after the ignition switch is turned to the "LOCK" position and the negative cable is disconnected from the battery. Otherwise, the system may be activated by reserve energy in the Sensing and Diagnostic Module (SDM).**

NOTE:

For the items with asterisk (*) in the "CONTENTS" below, refer to the same section of the Service Manual mentioned in "FOREWORD" of this manual.

8

CONTENTS

Diagnosis 8-3
Headlight ..... 8- *
Headlights with Leveling System (If Equipped) ..... 8- *
Rear Fog Light (If Equipped) ..... 8- *
Turn Signal and Hazard Warning Lights 8-3
Clearance, Tail and License Plate Lights ..... 8- *
Back-up Light 8-3
Brake Lights 8-3
Tachometer and ECM 8-4
Speedometer and VSS 8-4
Fuel Meter and Fuel Gauge Unit 8-4
Engine Coolant Temp. (ECT) Meter and ECT Sensor 8-4
Oil Pressure Light 8-4
Brake and Parking Brake Warning Light 8-5
Seat Belt Warning Light 8-5
Rear Window Defogger (If Equipped) 8-5
Front Wiper and Washer 8-6
Rear Wiper and Washer (If Equipped) 8-6
Power Window Control System (If Equipped) ..... 8- *
Power Door Lock System (If Equipped) 8-6
Power Door Lock System with Keyless Entry System (If Equipped) 8-7
Power Door Mirror Control System ..... 8- *
Door Mirror Heater (If Equipped) ..... 8- *
Front Seat Heater (If Equipped) 8-7
Cigarette Lighter ..... 8- *
Interior Lights ..... 8- *
On-Vehicle Service 8-8
Headlight 8-8
Headlight switch 8-8
Headlight ..... 8- *
Bulb replacement ..... 8- *
Headlight aiming adjustment with screen ..... 8- *
Headlights with Leveling System (If Equipped) ..... 8- *
Leveling switch ..... 8- *
Leveling actuator ..... 8- *
Turn Signal and Hazard Warning Light System 8-9
Turn signal and hazard warning light system circuit inspection 8-9
Turn signal light switch 8-11
Hazard switch ..... 8- *
Stop (Brake) Lamp 8-11
Stop (brake) lamp switch 8-11
Rear Fog Light (If Equipped) ..... 8- *
Rear fog light switch ..... 8- *
Ignition Switch 8-12
Combination Meter 8-13
Fuel Meter/Fuel Gauge Unit 8-16

Fuel level meter..... 8-16
Fuel sender gauge ..... 8- *
Engine Coolant Temperature Meter and Sensor Unit 8-17
Engine coolant temperature meter..... 8-17
Engine coolant temperature sensor 8-18
Oil Pressure Warning Light ..... 8- *
Oil pressure switch..... 8- *
Brake and Parking Brake Warning Light..... 8- *
Brake fluid level switch..... 8- *
Parking brake switch..... 8- *
Brak vacuum switch ..... 8- *
Seat Belt Warning Light (If Equipped)..... 8- *
Seat belt switch..... 8- *
Rear Window Defogger..... 8-18
Defogger switch ..... 8- *
Defogger wire..... 8- *
Defogger relay..... 8-18
Wiper and Washer 8-19
Front wiper/washer switch..... 8-19
Wiper motor..... 8- *
Washer pump..... 8- *
Rear Wiper and Washer 8-22
Wiper and washer switch 8-22
Rear wiper motor..... 8- *
Power Window Control System (If Equipped) ..... 8- *
Breaker..... 8- *
Power window main switch ..... 8- *
Power Door Lock System (If Equipped)..... 8-23
Power door lock system component location..... 8-23
Power door lock system operation inspection..... 8- *
Power door lock system circuit inspection..... 8-24
Driver side key cylinder switch..... 8- *
Power door lock actuator ..... 8- *
Power Door Lock System with Keyless Entry System (If Equipped)..... 8-25
Power door lock system with keyless entry system component location 8-25
System Description..... 8- *
Change of signal mode..... 8- *
Keyless entry system operation inspection..... 8- *
Keyless entry system circuit inspection 8-26
Transmitter..... 8- *
Driver side key cylinder switch..... 8- *
Power door lock actuator ..... 8- *
Door switch ..... 8- *
Power Door Mirror Control System (If Equipped) ..... 8- *
Mirror switch..... 8- *
Door mirror actuator..... 8- *
Door Mirror Heater (If Equipped) ..... 8- *
Mirror heater switch ..... 8- *
Mirror heater (if equipped) ..... 8- *
Front Seat Heater (If Equipped)..... 8-27
Seat heater switch (driver and passenger side) ..... 8- *
Seat heater wire..... 8-27

Diagnosis

Turn Signal and Hazard Warning Lights

Condition	Possible Cause	Correction
Flash rate high or one side only flashes	Bulb blown on “flash rate high”-side	Replace bulb.
	Incorrect bulb	Replace bulb.
	Turn signal/hazard warning relay faulty	Check system referring to “Turn Signal and Hazard Warning Lights System” in this section.
	Wiring or grounding faulty	
Flash rate low	Supply voltage low	Check charging system.
	Turn signal/hazard warning relay faulty	Check system referring to “Turn Signal and Hazard Warning Lights System” in this section.
One side only flashes	Turn signal switch faulty	Check system referring to “Turn Signal and Hazard Warning Lights System” in this section.
	Turn signal/hazard warning relay faulty	
	Wiring or grounding faulty	
No flashing	“HAZARD” and/or “METER” fuse(s) blown	After checking short circuit, replace fuse.
	Turn signal/hazard warning relay faulty	Check system referring to “Turn Signal and Hazard Warning Lights System” in this section.
	Combination switch or hazard switch faulty	
	Wiring or grounding faulty	

Back-up Light

Condition	Possible Cause	Correction
Back-up lights do not light up	Bulb(s) blown	Check bulb.
	“BACK” fuse blown	After checking short circuit, replace fuse.
	Back-up light switch faulty	Check back-up light switch.
	Wiring or grounding faulty	Repair circuit.
Back-up lights stay on	Back-up light switch faulty	Check back-up light switch.
	Wiring or grounding faulty	Repair circuit.

Brake Lights

Condition	Possible Cause	Correction
Brake lights do not light up	Bulb(s) blown	Check bulb.
	“STOP” fuse blown	After checking short circuit, replace fuse.
	Stop (brake) lamp switch faulty	Check stop (brake) lamp switch.
	Wiring or grounding faulty	Repair circuit.
Brake lights stay on	Stop (brake) lamp switch faulty	Check, adjust or replace switch.
	Wiring or grounding faulty	Repair circuit.

Tachometer and ECM

Condition	Possible Cause	Correction
Tachometer shows no operation	"METER" fuse blown	After checking short circuit, replace fuse.
	Wiring or grounding faulty	Repair circuit.
	Combination meter faulty	Replace combination meter.
	ECM or other controller faulty	Check ECM and other controller.

Speedometer and VSS

Condition	Possible Cause	Correction
Speedometer shows no operation	"METER" fuse blown	After checking short circuit, replace fuse.
	VSS faulty	Check VSS.
	Wiring or grounding faulty	Repair.
	Combination meter faulty	Replace combination meter.

Fuel Meter and Fuel Gauge Unit

Condition	Possible Cause	Correction
Fuel meter shows no operation	"METER" fuse blown	After checking short circuit, replace fuse.
	Fuel gauge unit faulty	Check fuel gauge unit.
	Fuel meter faulty	Check fuel meter.
	Wiring or grounding faulty	Repair circuit.

Engine Coolant Temp. (ECT) Meter and ECT Sensor

Condition	Possible Cause	Correction
Engine coolant temp. meter shows no operation	"METER" fuse blown	After checking short circuit, replace fuse.
	ECT meter faulty	Check ECT meter.
	ECT sensor faulty	Check ECT sensor.
	Wiring or grounding faulty	Repair circuit.

Oil Pressure Light

Condition	Possible Cause	Correction
Oil pressure warning light does not light up when ignition switch is on at engine off	"METER" fuse blown	After checking short circuit, replace fuse.
	Combination meter faulty	Replace combination meter.
	Oil pressure switch faulty	Check oil pressure switch.
	Wiring or grounding faulty	Repair circuit.

Brake and Parking Brake Warning Light

Condition	Possible Cause	Correction
Brake warning light does not light up when fluid low level	"METER" fuse blown	After checking short circuit, replace fuse.
	Combination meter faulty	Replace combination meter.
	Brake fluid level switch faulty	Check brake fluid level switch.
	Wiring or grounding faulty	Repair circuit.
Brake warning light does not light up when cranking (when ignition switch at ST position)	Ignition switch faulty	Check ignition switch.
	Combination meter faulty	Replace combination meter.
	Wiring or grounding faulty	Repair circuit.
Brake warning light does not light up when parking brake pull up	"METER" fuse blown	After checking short circuit, replace fuse.
	Combination meter faulty	Replace combination meter.
	Parking brake switch faulty	Check parking brake switch.
	Wiring or grounding faulty	Repair circuit.

Seat Belt Warning Light

Condition	Possible Cause	Correction
Seat belt warning light does not light up	Combination meter faulty	Replace combination meter.
	Seat belt switch faulty	Check seat belt switch.
	"METER" fuse blown	After checking short circuit, replace fuse.
	Wiring or grounding faulty	Repair circuit.

Rear Window Defogger (If Equipped)

Condition	Possible Cause	Correction
Defogger does not operate	"REAR DEFG" fuse blown	After checking short circuit, replace fuse.
	Defogger wire faulty	Check heat wire.
	Defogger switch faulty	Check defogger switch.
	Wiring or grounding faulty	Repair circuit.
	Defogger relay faulty	Check defogger relay.

Front Wiper and Washer

Condition	Possible Cause	Correction
Front wiper malfunctions or does not return to its original position	"WIPER-WASHER" fuse blown	After checking short circuit, replace fuse.
	Front wiper motor faulty	Check wiper motor.
	Front wiper switch faulty	Check wiper switch.
	Wiring or grounding faulty	Repair circuit.
Front washer malfunctions	Washer hose or nozzle clogged	Clean or repair clogged hose or nozzle.
	"WIPER-WASHER" fuse blown	After checking short circuit, replace fuse.
	Front washer motor faulty	Check washer motor.
	Front wiper switch faulty	Check wiper switch.
	Wiring or grounding faulty	Repair circuit.

Rear Wiper and Washer (If Equipped)

Condition	Possible Cause	Correction
Rear wiper malfunctions or does not return to its original position	"WIPER-WASHER" fuse blown	After checking short circuit, replace fuse.
	Rear wiper motor faulty	Check wiper motor.
	Rear wiper intermittent relay faulty	Check rear wiper intermittent relay.
	Rear wiper switch faulty	Check wiper switch.
	Wiring or grounding faulty	Repair circuit.
Rear washer malfunctions	Washer hose or nozzle clogged	Clean or repair clogged hose or nozzle.
	"WIPER-WASHER" fuse blown	After checking short circuit, replace fuse.
	Rear washer motor faulty	Check washer motor.
	Rear wiper intermittent relay faulty	Check rear wiper intermittent relay.
	Rear wiper switch faulty	Check wiper switch.
	Wiring or grounding faulty	Repair circuit.

Power Door Lock System (If Equipped)

Condition	Possible Cause	Correction
All doors can not be locked/unlocked by only driver side key cylinder switch	"D/L" fuse blown	After checking short circuit, replace fuse.
	Driver side key cylinder switch faulty	Check system referring to "Power Door Lock System" in this section.
	Power door lock controller faulty	
	Wiring or ground faulty	
Only one door can not be locked/unlocked	Power door lock actuator faulty	Check system referring to "Power Door Lock System" in this section.
	Wiring or grounding faulty	

Power Door Lock System with Keyless Entry System (If Equipped)

Condition	Possible Cause	Correction
All doors can not be locked/unlocked by only driver side key cylinder switch	"D/L" fuse blown	After checking short circuit, replace fuse.
	Driver side key cylinder switch faulty	Check system referring to "Power Door Lock System" in this section.
	Power door lock controller faulty	
	Wiring or ground faulty	
Only one door can not be locked/unlocked	Power door lock actuator faulty	Check system referring to "Power Door Lock System" in this section.
	Wiring or grounding faulty	
All doors can not be locked/unlocked by only keyless entry transmitter	Transmitter battery dead	Replace battery.
	Transmitter faulty	Replace transmitter.
	Code registration error	Perform code registration.
	Door switch faulty	Check system referring to "Power Door Lock System" in this section.
	Key remainder switch (in ignition switch) faulty	
	Power door lock controller faulty	
	Wiring or grounding faulty	
Turn signal lights can not be flashed when doors are locked/ unlocked by transmitter	Keyless entry system is in interior light signal mode	Change signal mode referring to "Change of Signal Mode" in this section, if necessary.
	Turn signal and hazard warning system faulty	Check system referring to "Turn Signal and Hazard Warning Light System" in this section.
	Power door lock controller faulty	Check system referring "Power Door Lock System With Keyless Entry System" in this section.
	Wiring or grounding faulty	
Interior light does not light when interior light switch is at DOOR position and doors are unlocked by transmitter	Power door lock controller faulty	Check system referring to "Power Door Lock System With Keyless Entry System" in this section.
	Wiring or grounding faulty	

Front Seat Heater (If Equipped)

Condition	Possible Cause	Correction
Both seat back and cushion do not become hot although seat heater switch is ON	"Heater" and/or "Seat Heater" fuse(s) blown	After checking short circuit, replace fuse.
	Seat heater switch faulty	Check seat heater switch.
	Wiring or grounding faulty	Repair circuit.
Only seat back does not become hot although seat heater switch is ON	Seat heater circuit in seat back faulty	Check seat heater.
	Wiring or grounding faulty	Repair circuit.
Only seat cushion does not become hot although seat heater switch is ON	Seat heater circuit in seat back and/or seat cushion faulty	Check seat heater.
	Wiring or grounding faulty	Repair circuit.

On-Vehicle Service

Headlight

Headlight switch

Removal

1) Disconnect negative cable at battery.

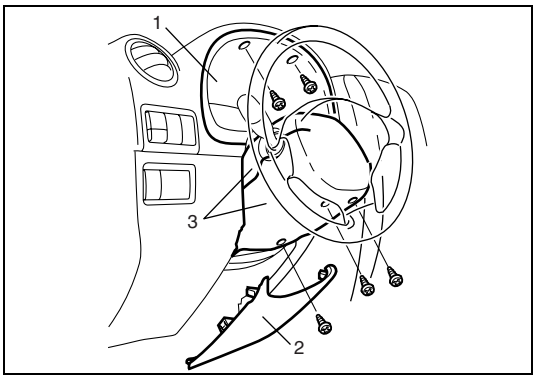

2) Remove meter cluster panel (1).
3) Remove steering column hole cover (2).
4) Remove steering column covers (3).

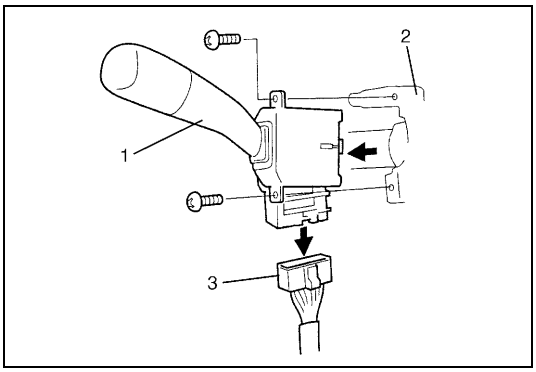

5) Remove headlight switch (1) from combination switch assembly (2) and disconnect its coupler (3).

Inspection

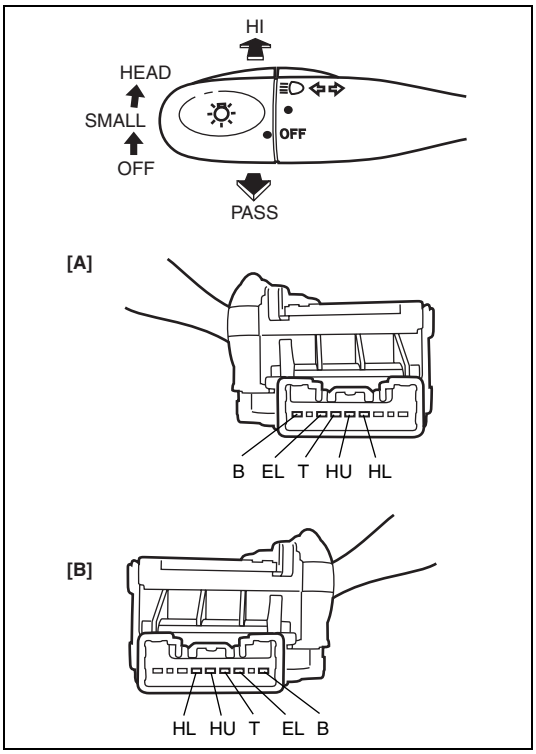

Check for continuity between terminals at each switch position as shown below.
If check result is not as specified, replace switch.

Switch Position \ Terminal		B	T	EL	HL	HU
OFF	LO					
	PASS			○		○
	HI					
SMALL	LO	○	○			
	PASS			○		○
	HI					
HEAD	LO	○	○	○	○	
	PASS			○		○
	HI			○		○

[A]: LH steering vehicle
[B]: RH steering vehicle

Installation

Reverse removal procedure.

Turn Signal and Hazard Warning Light System

Turn signal and hazard warning light system circuit inspection

1) Disconnect negative (–) cable from battery.

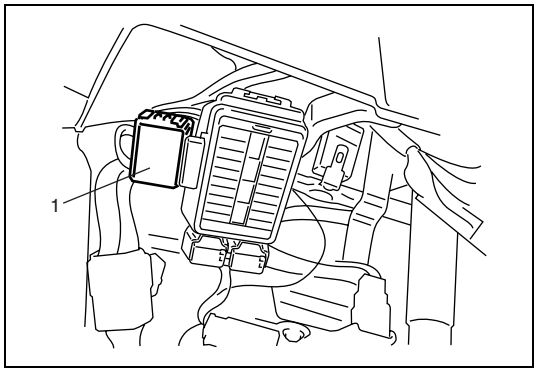

2) Disconnect turn signal and hazard warning relay (1) connector.

3) Connect negative (–) cable to battery.

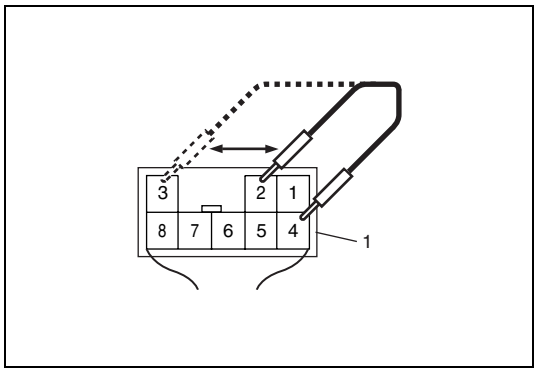

4) Confirm that right or left side turn signal light turns on when connect “4” terminal to “2” or “3” terminal with service wire.
   If turn signal light does not turn on, check bulb or repair applicable circuit.

1. Turn signal and hazard warning relay connector viewed from harness side

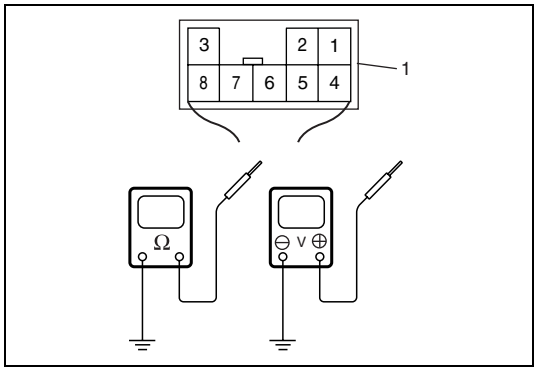

5) Check that voltage and continuity between the following terminals and body ground are specifications under each condition.
   If check result is not as specified, repair applicable circuit.
   If check result is OK, replace turn signal and hazard warning relay and recheck.

1. Turn signal and hazard warning relay connector viewed from harness side

Turn signal and hazard warning lights system circuit check

Terminal	Circuit	Specification	Condition
1	Ignition switch circuit	10 – 14 V	Ignition switch is ON position.
		0 – 1 V	Ignition switch is OFF position.
4	Power supply for turn signal and hazard warning lights	10 – 14 V	–
5	Right side turn signal light switch circuit	Continuity	Turn signal light switch is R position.
		No continuity	Turn signal light switch is N or L position.
6	Left side turn signal light switch circuit	Continuity	Turn signal light switch is L position.
		No continuity	Turn signal light switch is N or R position.
7	Ground	0 – 1 V	–
8	Hazard warning switch and keyless entry system (if equipped) circuits	Continuity	Hazard warning switch is ON position.
			Approx. 1.2 sec. after pushing UNLOCK button on transmitter.
			Approx. 0.6 sec. after pushing LOCK button on transmitter.
		No continuity	Hazard warning switch is OFF position.

Turn signal light switch

Removal and Installation

Refer to “Headlight Switch” in this section.

Inspection

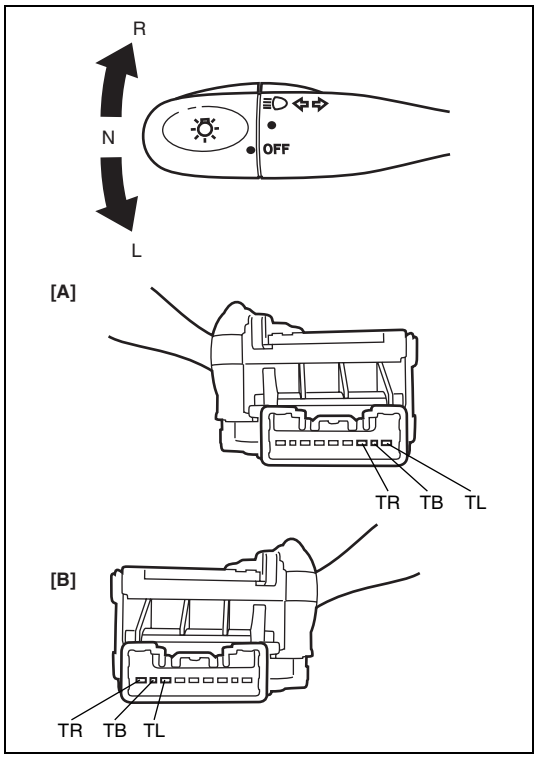

Check for continuity between terminals at each switch position as shown below.
If check result is not as specified, replace switch.

Switch Position \ Terminal	TL	TB	TR
L	○—○		
N			
R		○—○	

[A]: LH steering vehicle
[B]: RH steering vehicle

Stop (Brake) Lamp

Stop (brake) lamp switch

Inspection

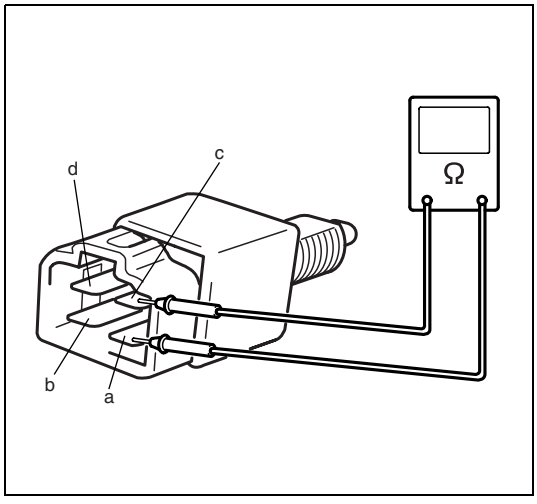

Check stop lamp (brake) switch for continuity as shown below.
If check result is not as specified, replace switch.

Shaft \ Terminal	a	b	c	d
FREE	○—○		○—○	
PUSH				

Ignition Switch

Removal

1) Disconnect negative cable at battery.

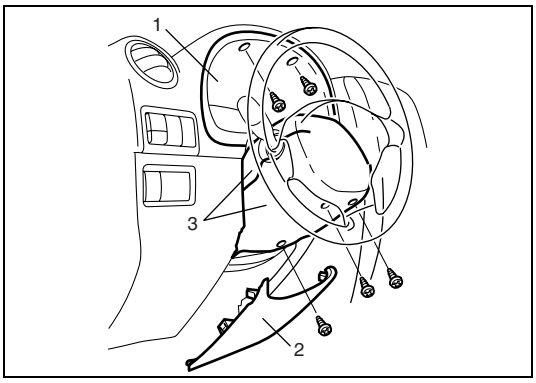

2) Remove meter cluster panel (1).
3) Remove steering column hole cover (2).
4) Remove steering column covers (3).

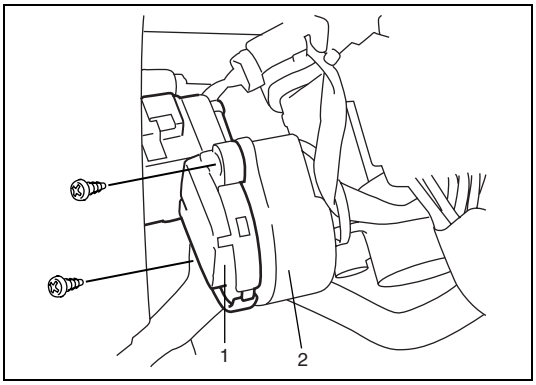

5) Remove ignition switch (1) from ignition key cylinder (2) and disconnect its coupler.

Installation

Reverse removal procedure.

Inspection

1) Remove steering column assembly referring to “Steering Column Assembly” in Section 3C.

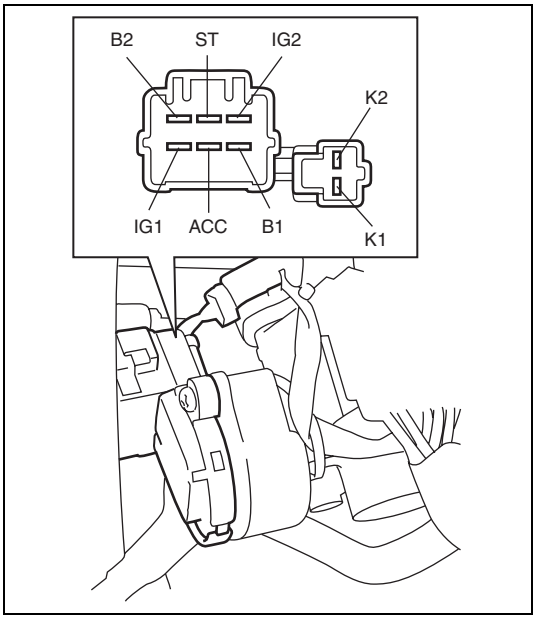

2) Check for continuity between terminals at each switch position as shown below.
   If check result is not as specified, replace switch.

Terminal / Key / Position		B1	B2	ACC	IG1	IG2	ST	K1	K2
OUT	LOCK								
IN	ACC	○		○					
	ON	○	○	○	○	○		○	○
	START	○	○		○		○		

Combination Meter

Combination Meter Circuit Diagram

M13 Engine Model

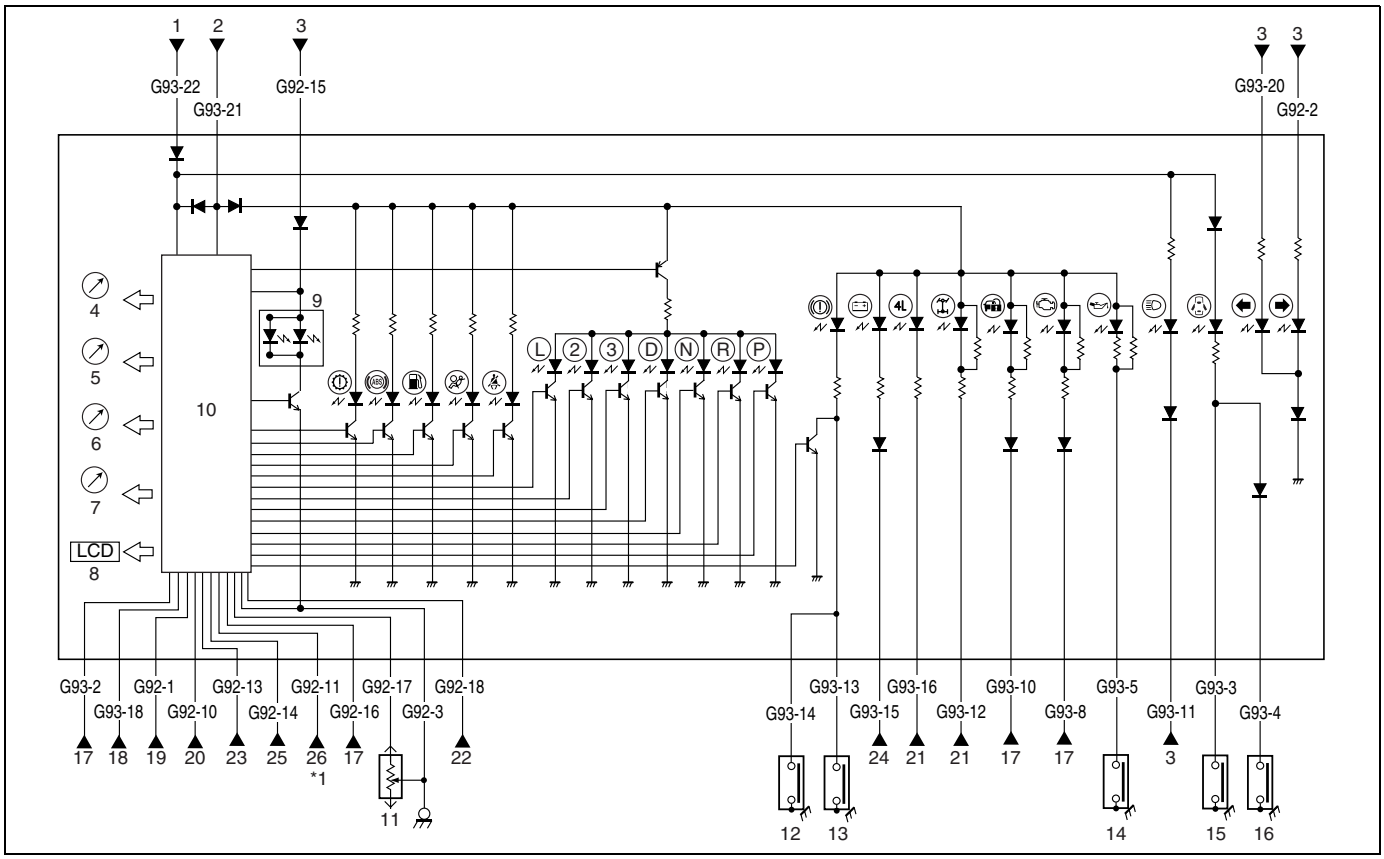

1 Main fuse	10. CPU	19. DLC
2. METER fuse	11. Fuel level gauge	20. ABS control module (if equipped)
3. Combination switch	12. Brake fluid level switch	21. 4WD control module
4. Speedometer	13. Parking brake switch	22. Key remainder switch
5. Tachometer	14. Oil pressure switch	23. SDM (if equipped)
6. ECT meter	15. Door switch (except driver side)	24. Generator
7. Fuel level meter	16. Door switch (driver side)	25. Seat belt switch (if equipped)
8. Odometer (tripmeter)	17. ECM	26. TCM (A/T vehicle)
9. Back light	18. VSS	*1. Serial communication line

K9K Engine Model

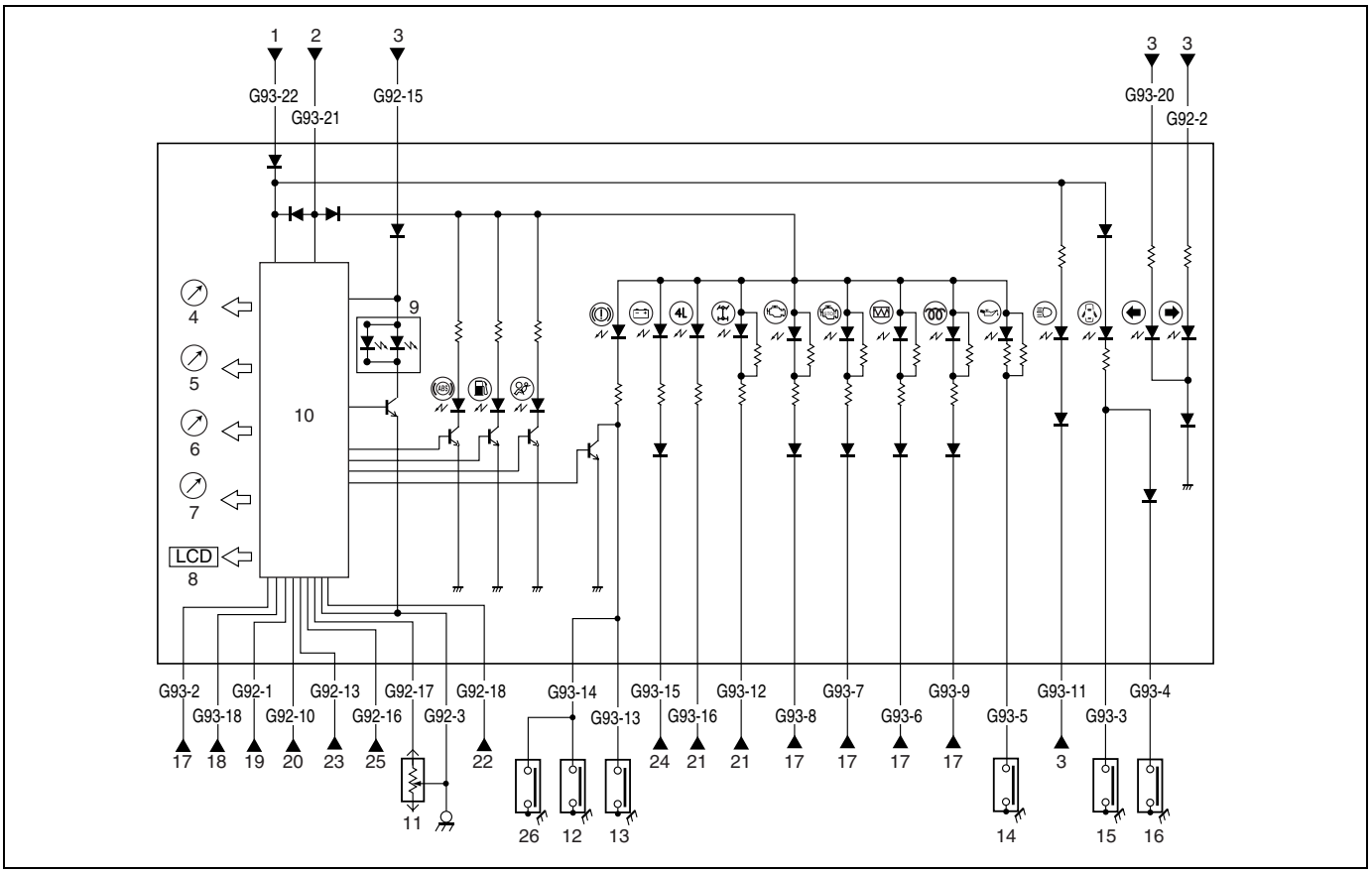

1 Main fuse	10. CPU	19. DLC
2. METER fuse	11. Fuel level gauge	20. ABS control module
3. Combination switch	12. Brake fluid level switch	21. 4WD control module
4. Speedometer	13. Parking brake switch	22. Key remainder switch
5. Tachometer	14. Oil pressure switch	23. SDM
6. ECT meter	15. Door switch (except driver side)	24. Generator
7. Fuel level meter	16. Door switch (driver side)	25. ECT sensor
8. Odometer (tripmeter)	17. ECM	26. Brake vacuum switch
9. Back light	18. VSS	

Terminal arrangement of coupler viewed from harness side

G92

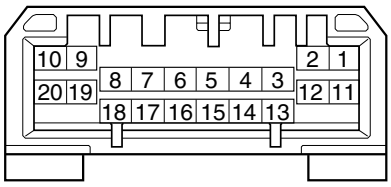

G93

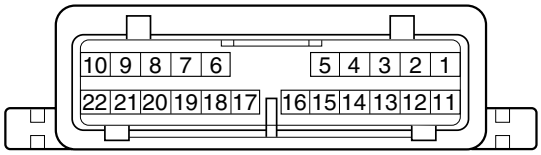

Connector	Terminal	Circuit
G92	1	To DLC
	2	To combination switch (turn R)
	3	To engine ground
	4	–
	5	–
	6	–
	7	–
	8	–
	9	–
	10	To ABS control module (ABS indicator control signal, if equipped)
	11	To TCM (A/T vehicle)
	12	–
	13	To SDM (if equipped)
	14	To seat belt switch (if equipped)
	15	To combination switch (headlight switch)
	16	To ECM (ECT meter signal, M13 engine)
		To ECT sensor (K9K engine)
	17	To fuel level gauge
	18	To key remainder switch
	19	–
	20	–
G93	1	–
	2	To ECM (tachometer signal)

Connector	Terminal	Circuit
G93	3	To door switch (except driver side)
	4	To door switch (driver side)
	5	To oil pressure switch
	6	To ECM (injection warning light control signal, K9K engine)
	7	To ECM (red stop warning light control signal, K9K engine)
	8	To ECM (MIL control signal)
	9	To ECM (glow indicator control signal, K9K engine)
	10	To ECM (immobilizer indicator control signal, if equipped)
	11	To combination switch (dimmer switch)
	12	To 4WD control module (4WD indicator control signal)
	13	To parking brake switch
	14	To brake fluid level switch and brake vacuum switch (K9K engine)
	15	To generator
	16	To 4WD control module (4L indicator control signal)
	17	–
	18	To VSS
	19	–
	20	To combination switch (turn L)
	21	To ignition switch
	22	To main fuse

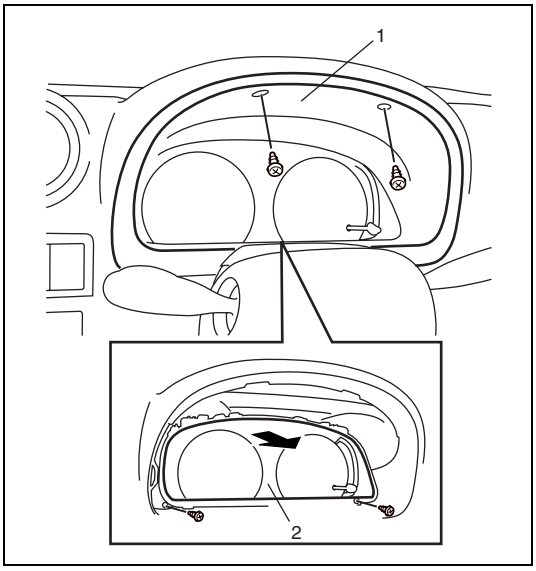

Removal

1) Disconnect negative cable at battery.
2) Remove meter cluster panel (1).
3) Disconnect couplers from combination meter (2).
4) Remove combination meter (2).

Installation

Reverse removal procedure for installation.

Fuel Meter/Fuel Gauge Unit

Fuel level meter

Inspection

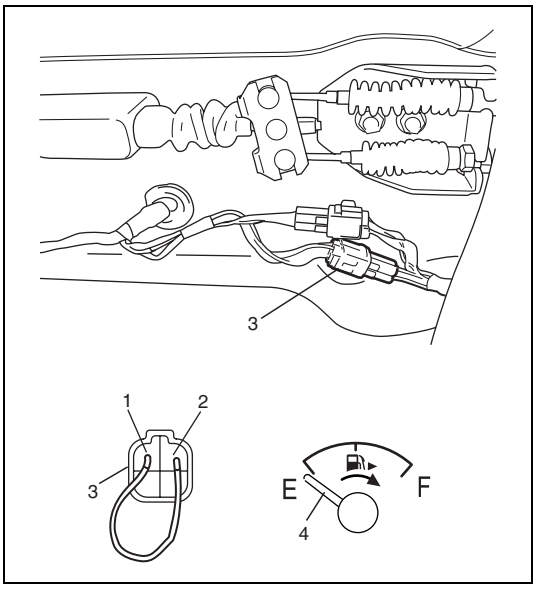

1) Disconnect negative cable at battery.
2) Disconnect floor harness connector (3) (white connector).
3) Using service wire, short terminal (1) and (2) of floor harness connector (3).
4) Connect negative cable to battery and then turn ignition switch to ON position. Make sure that the meter pointer (4) moves from the position “E”.
   If fuel level meter does not operate, check wire harness between floor harness connector and combination meter connector.
   If wire is OK, replace combination meter.

Engine Coolant Temperature Meter and Sensor Unit

Engine coolant temperature meter

Inspection

M13 Engine Model

NOTE:

Make sure that all related connector terminals are in good contact condition before combination meter inspection.

1) Confirm that malfunction DTC is not detected in ECM.
   If it is detected, go to each diagnostic flow table.
2) Turn ignition switch to OFF position.
3) Remove combination meter referring to “Combination Meter” in this section.
4) Confirm that there is no open or short in ECT signal circuit of combination meter harness.
5) Confirm that there are no open or short in power and ground wire circuit of combination meter harness.
6) Connect combination meter connectors from combination meter.
7) Connect oscilloscope between “G92-16” and “G92-3” terminals of combination meter connector.
8) Turn ignition switch to ON position.
9) Check that oscilloscope shows is waveform from ECM to engine coolant temperature meter.
   If oscilloscope is indicates waveform, replace combination meter.
   If oscilloscope is not indicates waveform, substitute a known-good ECM and recheck.

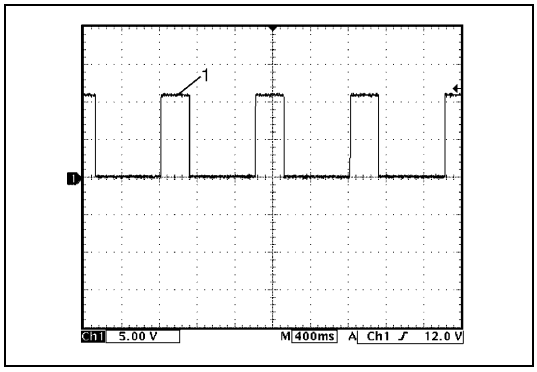

1. Engine coolant temperature is approximately 80 °C (176 °F)

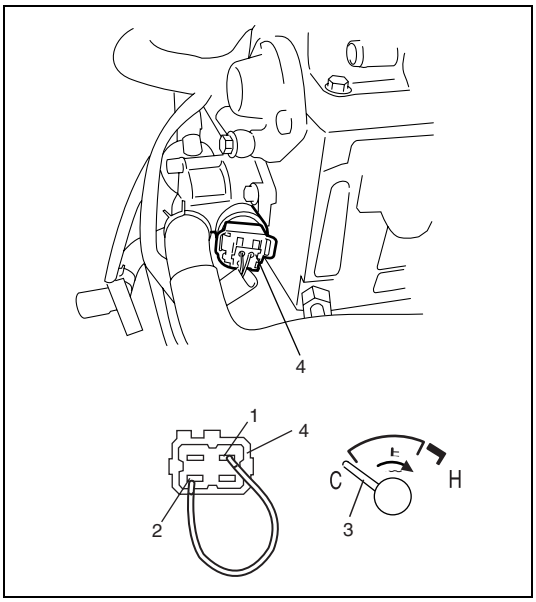

K9K Engine Model

1) Disconnect ECT sensor connector (4).
2) Using service wire, short terminal (1) and (2) of ECT sensor connector (4).
3) Turn ignition switch to ON position. Make sure that the meter pointer (3) moves from the position “C”.
   If engine coolant temperature meter does not operate, check wire harness between ECT sensor connector and combination meter connector.
   If wire is OK, replace combination meter.

Engine coolant temperature sensor

Removal/Installation/Inspection

M13 Engine Model

Refer to “Engine Coolant Temperature Sensor (ECT Sensor)” in Section 6E.

Rear Window Defogger

Defogger relay

Inspection

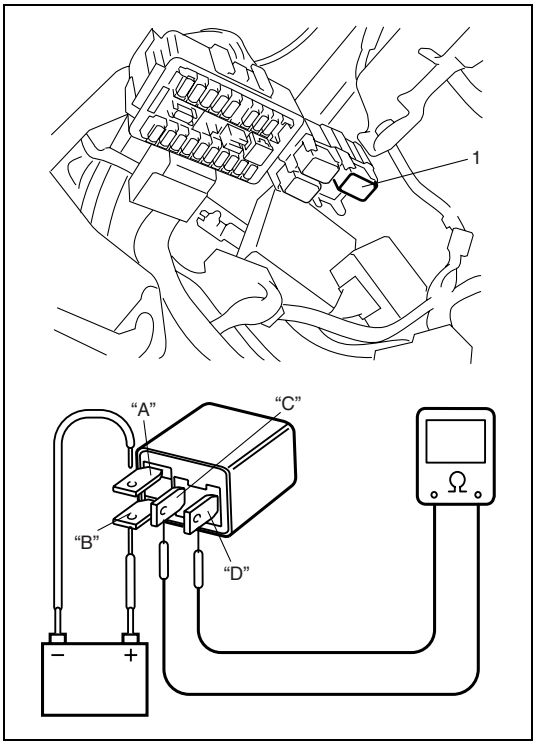

1) Disconnect negative cable at battery.
2) Remove defogger relay (1) from relay box.
3) Check that there is no continuity between terminal “C” and “D”. If there is continuity, replace relay.
4) Connect battery positive terminal to terminal “B” of relay.
   Connect battery negative terminal “A” of relay.
   Check continuity between terminal “C” and “D”.
   If there is not continuity when relay is connected to the battery, replace relay.

Wiper and Washer

Front wiper/washer switch

Removal

1) Disconnect negative cable at battery.

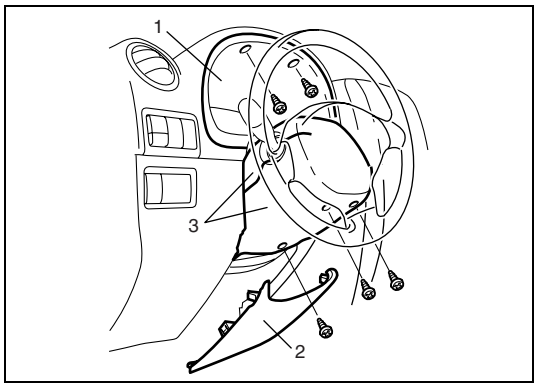

2) Remove meter cluster panel (1).
3) Remove steering column hole cover (2).
4) Remove steering column covers (3).

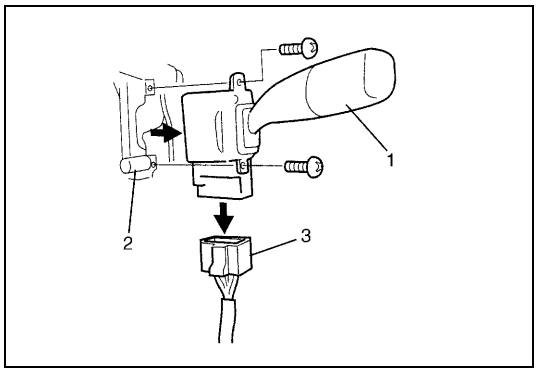

5) Remove front wiper and washer switch (1) from combination switch assembly (2) and disconnect its coupler (3).

Inspection

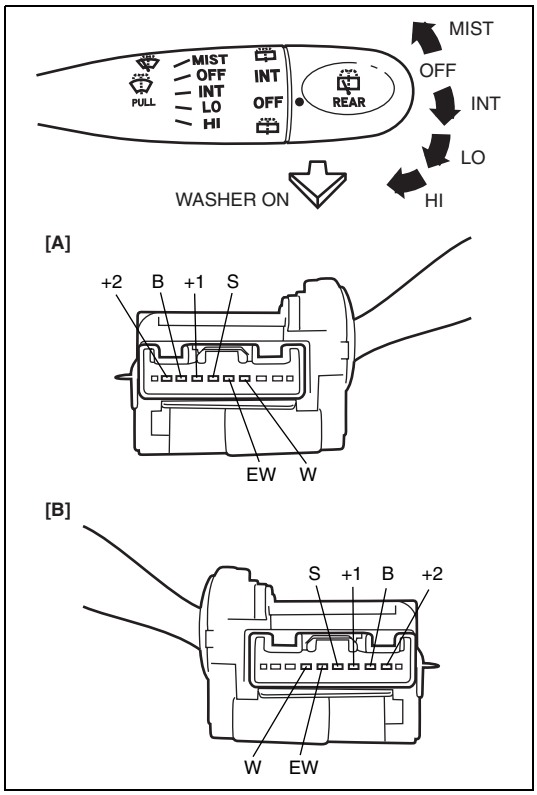

Check for continuity between terminals at each switch position as shown below.
If check result is not as specified, replace switch.

Wiper SW \ Terminal	B	+2	+1	S
MIST	○		○	
OFF			○	○
INT			○	○
LO	○		○	
HI	○	○		

Washer SW \ Terminal	W	EW
OFF		
ON	○	○

[A]: LH steering vehicle
[B]: RH steering vehicle

Installation

Reverse removal procedure.

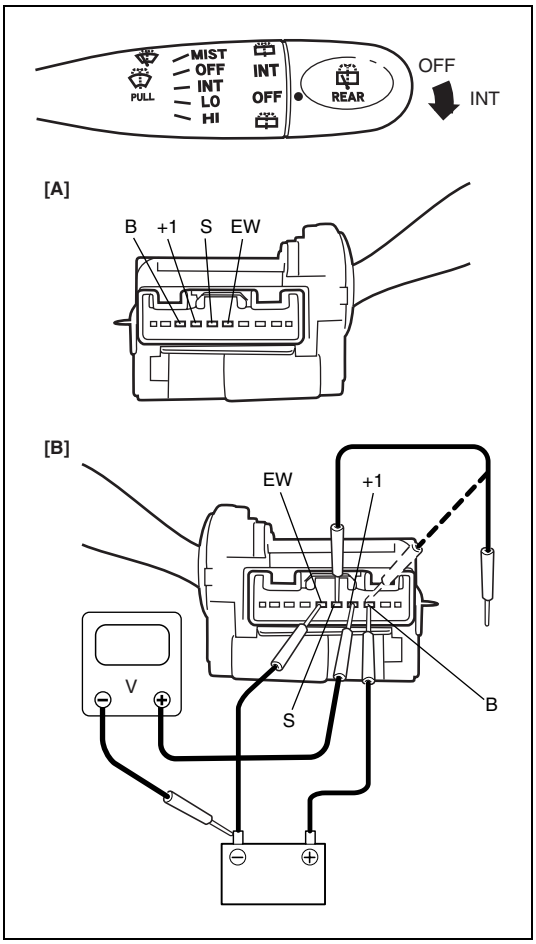

Intermittent Wiper Relay Circuit Inspection

1) Remove wiper and washer switch referring to “Front Wiper/ Washer Switch” in this section.
2) Turn the front wiper switch to INT position.
3) Connect battery positive terminal to terminal “B” and battery negative terminal to terminal “EW”.
4) Connect voltmeter positive lead to terminal “+1” and negative lead to battery negative terminal.
   Check that the voltmeter indicates the battery voltage (10 – 14 V).
5) Connect terminal “S” and terminal “B” for 5 sec. or more by a jumper wire.
6) Disconnect end of the jumper wire from terminal “B”.
7) Connect disconnected jumper wire end to terminal “EW”, then check that voltage between terminal “+1” and terminal “EW” changes as shown below.
   If check result is not satisfied, replace switch.

[A]: LH steering vehicle
[B]: RH steering vehicle

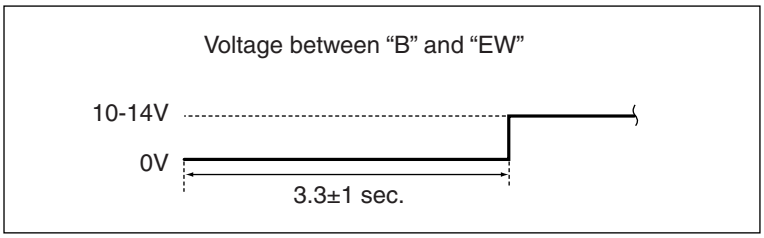

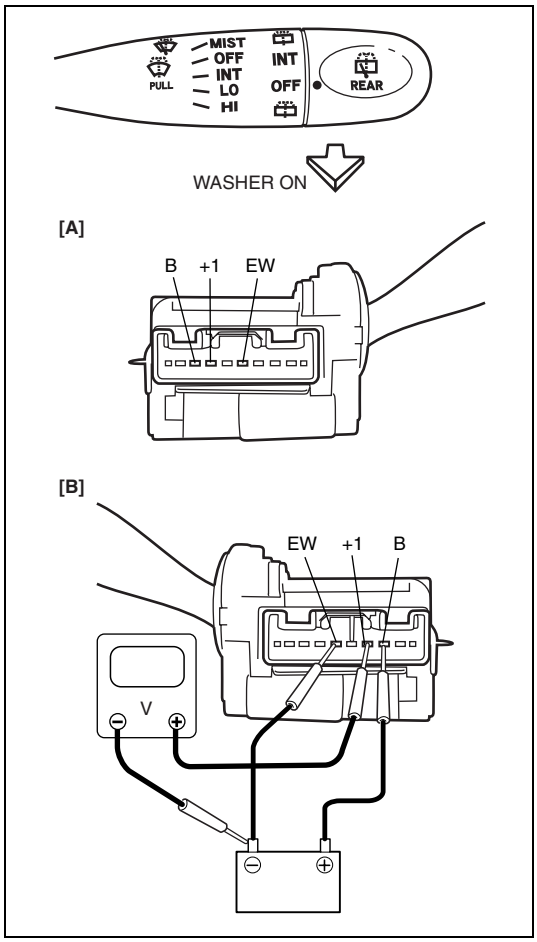

Washer Linked Operation

1) Remove wiper and washer switch referring to “Front Wiper/ Washer Switch” in this section.
2) Make sure that front wiper switch is at OFF position.
3) Connect battery positive terminal to terminal “B” and battery negative terminal to terminal “EW”.
4) Connect voltmeter positive lead to terminal “+1” and negative lead to battery negative terminal.
5) When front washer switch is ON, check that voltage changes as shown below.
   If check result is not satisfied, replace switch.

[A]: LH steering vehicle
[B]: RH steering vehicle

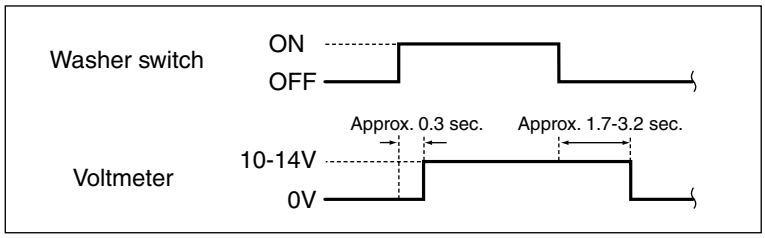

Rear Wiper and Washer

Wiper and washer switch

Inspection

1) Remove wiper and washer switch referring to “Front Wiper/ Washer Switch” in this section.
2) Check for continuity between terminals at each switch position as shown below.
   If check result is not as specified, replace switch.

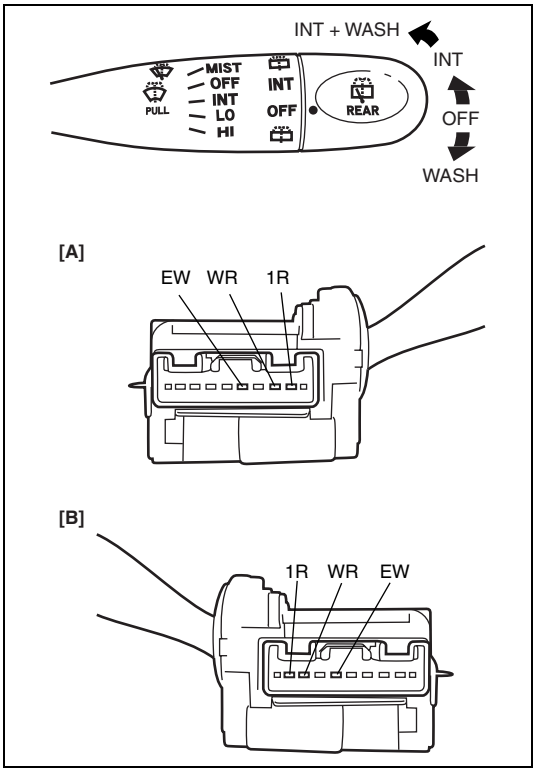

Position \ Terminal	WR	1R	EW
WASH	○	—	○
OFF			
INT		○	○
WIPER and WASHER ON	○	○	○

[A]: LH steering vehicle
[B]: RH steering vehicle

Power Door Lock System (If Equipped)

Power door lock system component location

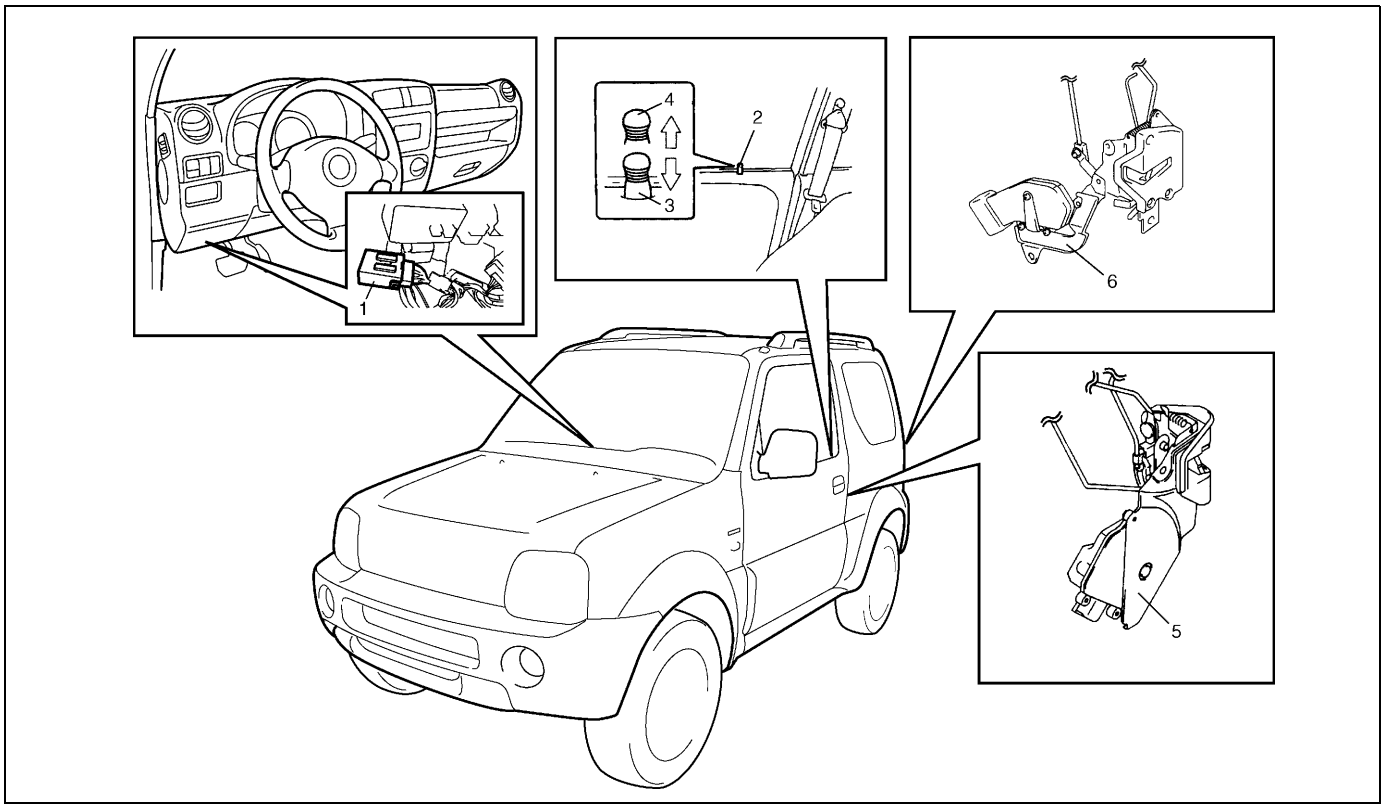

1. Power door lock controller	3. LOCK position	5. Front door actuator
2. Driver side door knob switch	4. UNLOCK position	6. Back door actuator

Power door lock system circuit inspection

1) Disconnect negative cable from battery.
2) Disconnect door lock controller coupler (1).
3) Confirm that all doors are unlocked. Connect battery positive (+) and negative (–) terminals to door lock controller coupler terminals and check power door lock operation as follows.
   If it does not operate as specified, repair applicable circuit or check actuator. If it operates as specified, go to next step.

Power door lock operation for vehicle:

Step	TERMINAL		OPERATION
	10	11	
1	⊕	⊖	UNLOCK ⟶ LOCK
2	⊖	⊕	LOCK ⟶ UNLOCK

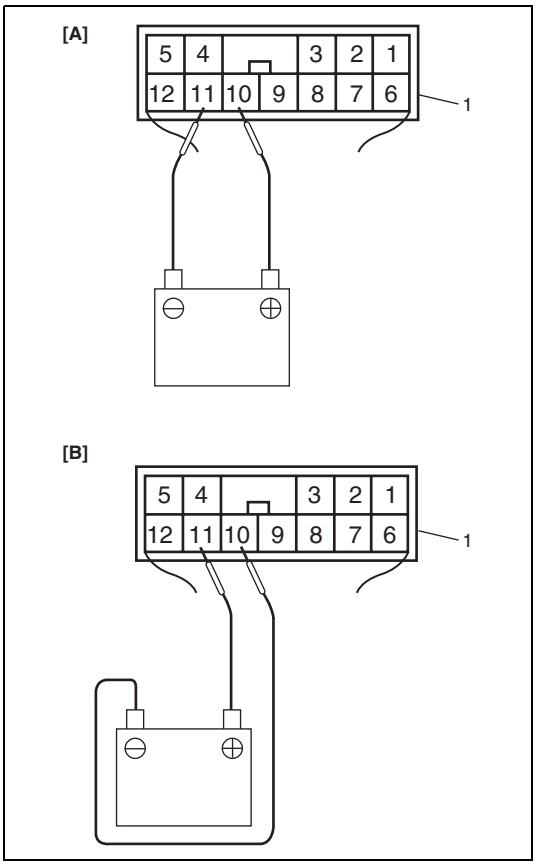

[A]: Step 1: Lock operation check
[B]: Step 2: Unlock operation check
1. Power door lock controller coupler viewed from harness side

4) Connect negative (–) cable to battery.
5) Check that the voltage and continuity between the following terminals and body ground are specifications under each conditions.
   If check result is not as specified, repair circuit.
   If check result is OK, recheck power door lock system as follows.
   a) Substitute a known-good door lock controller.
   b) Recheck system for operation.

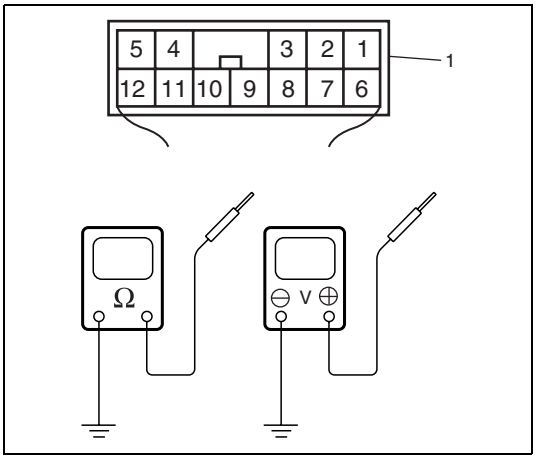

1. Power door lock controller coupler viewed from harness side

Power door lock system circuit check

Terminal	Circuit	Specification	Condition
7	Main power supply	10 – 14 V	–
8	Driver side door knob switch lock signal circuit	Continuity	Driver side door knob switch is lock position.
		No continuity	Driver side door knob switch is unlock position.
9	Driver side door knob switch unlock signal circuit	Continuity	Driver side door knob switch is unlock position.
		No continuity	Driver side door knob switch is lock position.
12	Ground	0 – 1 V	–

Power Door Lock System with Keyless Entry System (If Equipped)

Power door lock system with keyless entry system component location

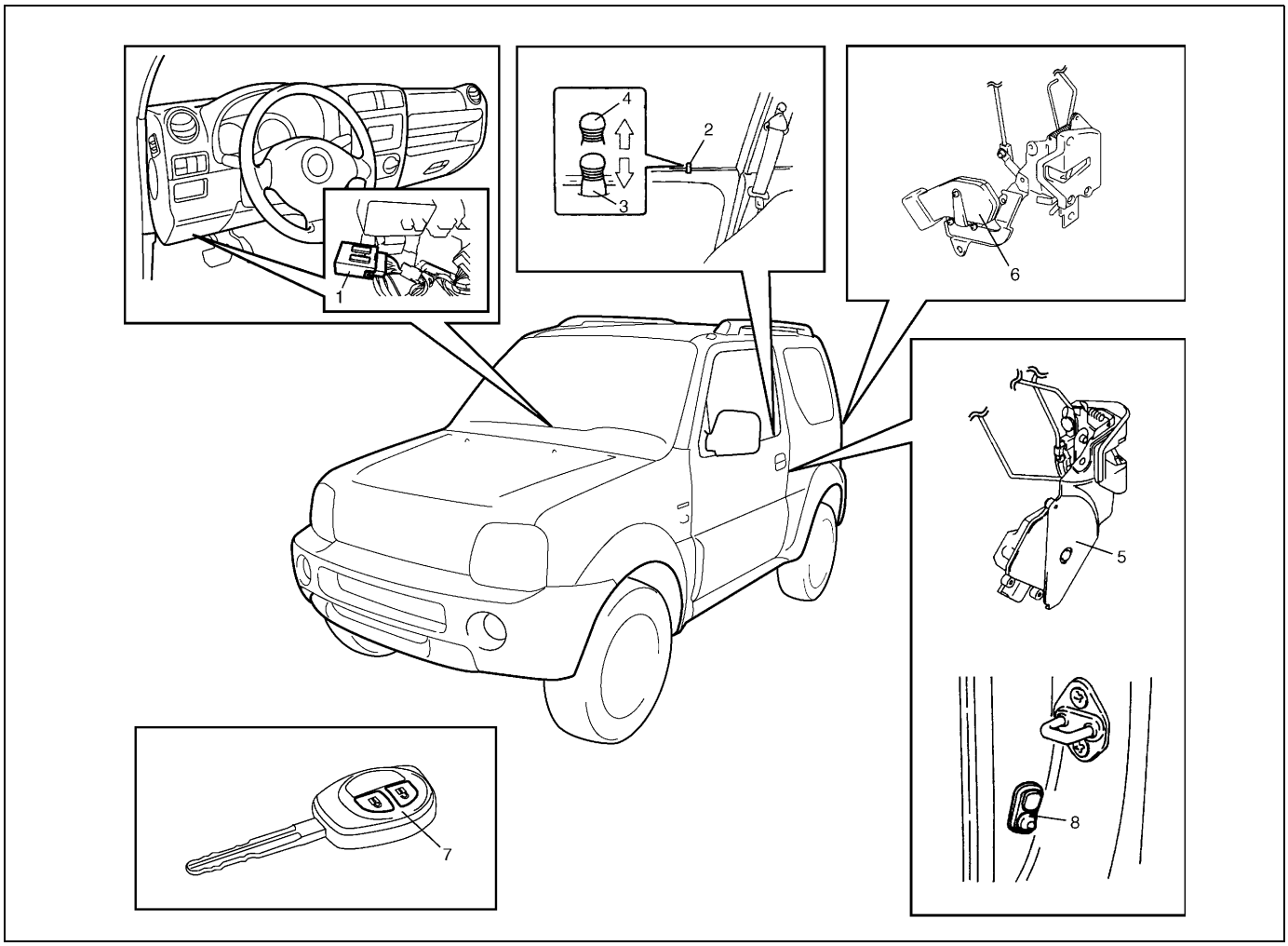

1. Power door lock controller	4. UNLOCK position	7. Transmitter
2. Driver side door knob switch	5. Front door actuator	8. Door switch
3. LOCK position	6. Back door actuator	

Keyless entry system circuit inspection

NOTE:

If keyless entry system is in interior light signal mode, change to hazard warning light signal mode referring to "Change of Signal Mode" in this section.

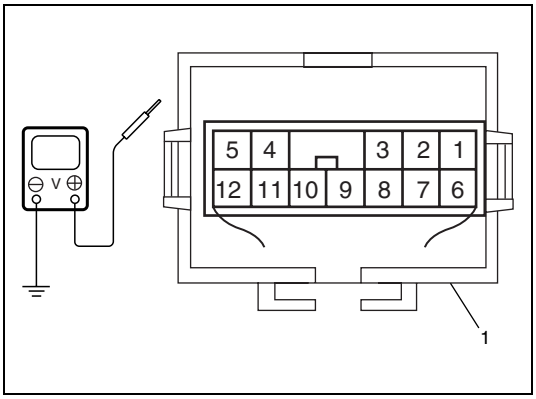

Check that the voltage and continuity between the following terminals and body ground are specifications under each conditions.
If check result is not as specified, check applicable circuit.
If circuit is normal, recheck keyless entry system for operation as follows.

1) Substitute a known-good door lock controller.
2) Register key code referring to "Code Registration Procedure" under "Transmitter" in this section.

1. Door lock controller

Keyless entry system circuit check

Terminal	Circuit	Specification	Condition
2	Key remainder circuit	10 – 14 V	Ignition key is in ignition switch.
		0 – 1 V	Ignition key is not in ignition switch.
4	Door switch & interior light circuit	0 – 1 V	Driver side, passenger side or back door is open.
		10 – 14 V	All doors are close.
		Figure "A"	Fulfill the following conditions. • All door is close. • Interior light switch is middle position. • 15 seconds after pushing "UNLOCK" button on transmitter.
5	Hazard warning signal circuit	Figure "B"	Push "LOCK" button on transmitter.
		Figure "C"	Push "UNLOCK" button on transmitter.

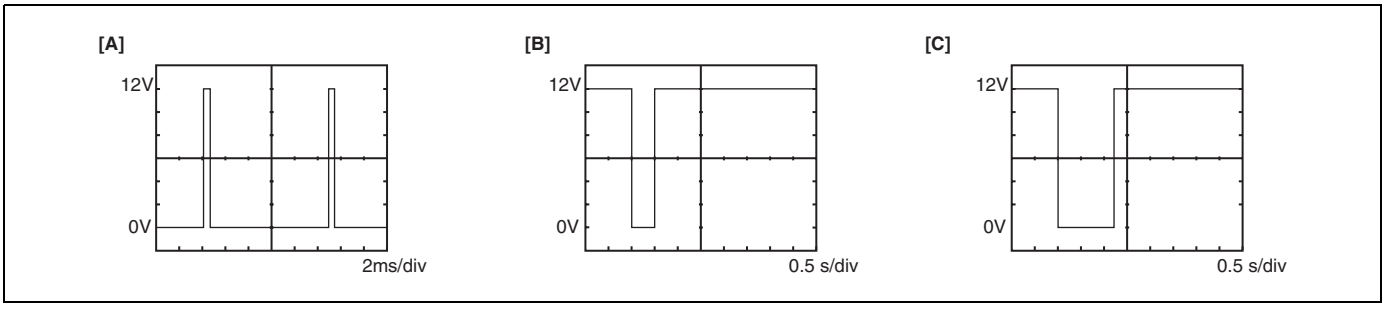

[A]: Figure "A"
[B]: Figure "B"
[C]: Figure "C"

Front Seat Heater (If Equipped)

Seat heater wire

Inspection

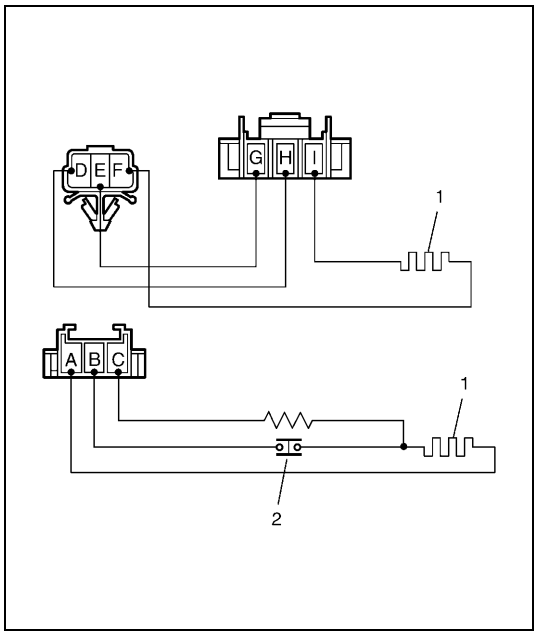

1) Confirm that seat heater switch is OFF position.
2) Disconnect two couplers of seat heater under the seat cushion.
3) Check for continuity between terminals as show below.
   If no continuity is indicated, replace faulty seat heater.

Seat heater circuit in seat back
Between “D” and “H”
Between “E” and “G”
Between “F” and “I”

Seat heater circuit in seat cushion
Between “A” and “B”
Between “A” and “C”

1.	Heater wire
2.	Thermostat

SECTION 8G

IMMOBILIZER CONTROL SYSTEM (M13 ENGINE MODEL) (IF EQUIPPED)

WARNING:

For vehicles equipped with Supplemental Restraint (Air Bag) System

- **Service on and around the air bag system components or wiring must be performed only by an authorized SUZUKI dealer. Refer to "Air Bag System Components and Wiring Location View" under "General Description" in air bag system section in order to confirm whether you are performing service on or near the air bag system components or wiring. Please observe all WARNINGS and "Service Precautions" under "On-Vehicle Service" in air bag system section before performing service on or around the air bag system components or wiring. Failure to follow WARNINGS could result in unintentional activation of the system or could render the system inoperative. Either of these two conditions may result in severe injury.**
- **Technical service work must be started at least 90 seconds after the ignition switch is turned to the "LOCK" position and the negative cable is disconnected from the battery. Otherwise, the system may be activated by reserve energy in the Sensing and Diagnostic Module (SDM).**

NOTE:

- **For the items with asterisk (*) the "CONTENTS" below, refer to the same section of the Service Manual mentioned in "FOREWORD" of this manual.**
- **Immobilizer control system for M13 engine with VVT is introduced since the ECM terminal arrangement of M13 engine with VVT is different from that of M13 engine without VVT.**
- **Whether the immobilizer indicator lamp is used in the particular vehicle or not depends on vehicle specifications. If there is an heated oxygen sensor (sensor 2) on exhaust pipe, the vehicle is equipped with immobilizer indicator lamp and if there isn't, it is not equipped with immobilizer indicator lamp. For details of heated oxygen sensor (sensor 2), refer to Section 6E in this manual.**

CONTENTS

General Description 8G-3
System and Location 8G-3
Immobilizer Control Module ..... 8G- *
ECM ..... 8G- *
On-Board Diagnostic System (Self-Diagnosis Function) ..... 8G- *
Diagnosis ..... 8G- *
Precautions in Diagnosing Troubles ..... 8G- *
Precautions in identifying diagnostic trouble code ..... 8G- *
Diagnostic Flow Table ..... 8G- *
Diagnostic Trouble Code (DTC) Check (Immobilizer Control Module) ..... 8G- *
[Vehicle not equipped with air bag system] ..... 8G- *
[Vehicle equipped with air bag system] ..... 8G- *
Diagnostic Trouble Code (DTC) Check (ECM) ..... 8G- *
[Not using SUZUKI scan tool] (Except for vehicle equipped with immobilizer indicator lamp) ..... 8G- *
[Using SUZUKI scan tool] ..... 8G- *
Diagnostic Trouble Code Table ..... 8G- *
Immobilizer control module ..... 8G- *
Table A DTC is Not Output From Diagnostic Output Terminal (For Vehicle Not Equipped with Air Bag System) ..... 8G- *

Table B Immobilizer Indicator Lamp Check For Vehicle Equipped with Immobilizer Indicator Lamp (Immobilizer Indicator Lamp Does Not Light at Ignition Switch ON) 8G-5
Table C Immobilizer Indicator Lamp Check for Vehicle Equipped with Immobilizer Indicator Lamp (Immobilizer Indicator Lamp Remains on After Engine Starts) 8G-6
Table D DTC is Not Output From Immobilizer Control Module (For Vehicle Equipped with Air Bag System)..... 8G- *
DTC11/32 Transponder Code Not Matched ..... 8G- *
DTC31 Transponder Code Not Registered..... 8G- *
DTC12 Fault in Immobilizer Control Module ..... 8G- *
DTC13 No Transponder Code Transmitted or Coil Antenna Opened / Shorted..... 8G- *
DTC21 ECM / Immobilizer Control Module Code Not Matched (Immobilizer Control Module Side)..... 8G- *
DTC81 ECM / Immobilizer Control Module Code Not Matched (P1623) (ECM Side)..... 8G- *
DTC84 ECM / Immobilizer Control Module Code Not Registered (P1620)..... 8G- *
DTC82 (P1622) Fault in ECM..... 8G- *
DTC22 Ignition Switch Circuit Open / Short ..... 8G- *
DTC23 No ECM / Immobilizer Control Module Code Transmitted From ECM or DLC Circuit Opened / Shorted..... 8G-7
DTC83 (P1621) No ECM / Immobilizer Control Module Code Transmitted From Immobilizer Control Module or DLC Circuit Opened / Shorted 8G-7
Inspection of ECM, Immobilizer Control Module and Its Circuit..... 8G- *
On-Vehicle Service ..... 8G- *
Precautions in Handling Immobilizer Control System ..... 8G- *
Immobilizer Control Module..... 8G- *
Coil Antenna (Vehicle not equipped with air bag system) ..... 8G- *
How to Register Ignition Key..... 8G- *
Procedure After Immobilizer Control Module Replacement..... 8G- *
Procedure After ECM Replacement ..... 8G- *
Special Tools ..... 8G- *

General Description

System and Location

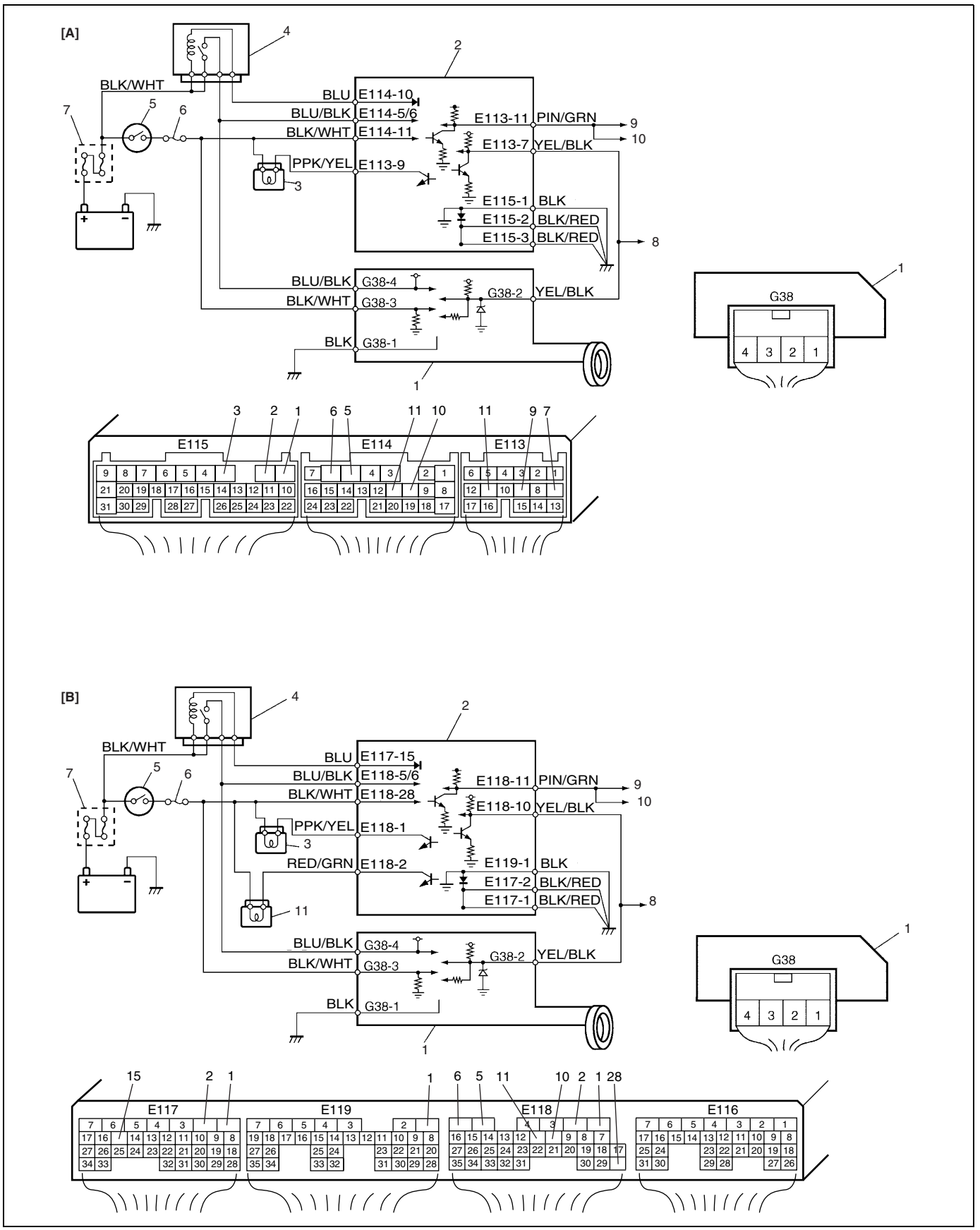

1. Immobilizer Control Module	6. Fuse	11. Immobilizer indicator lamp (if equipped)
2. ECM	7. Main fuse	[A]: M13 engine without VVT
3. Malfunction indicator lamp	8. To #9-pin in data link connector	[B]: M13 engine with VVT
4. Main relay	9. To #7-pin in data link connector	
5. Ignition switch	10. To ABS control module SDM and TCM	

Table B Immobilizer Indicator Lamp Check For Vehicle Equipped with Immobilizer Indicator Lamp (Immobilizer Indicator Lamp Does Not Light at Ignition Switch ON)

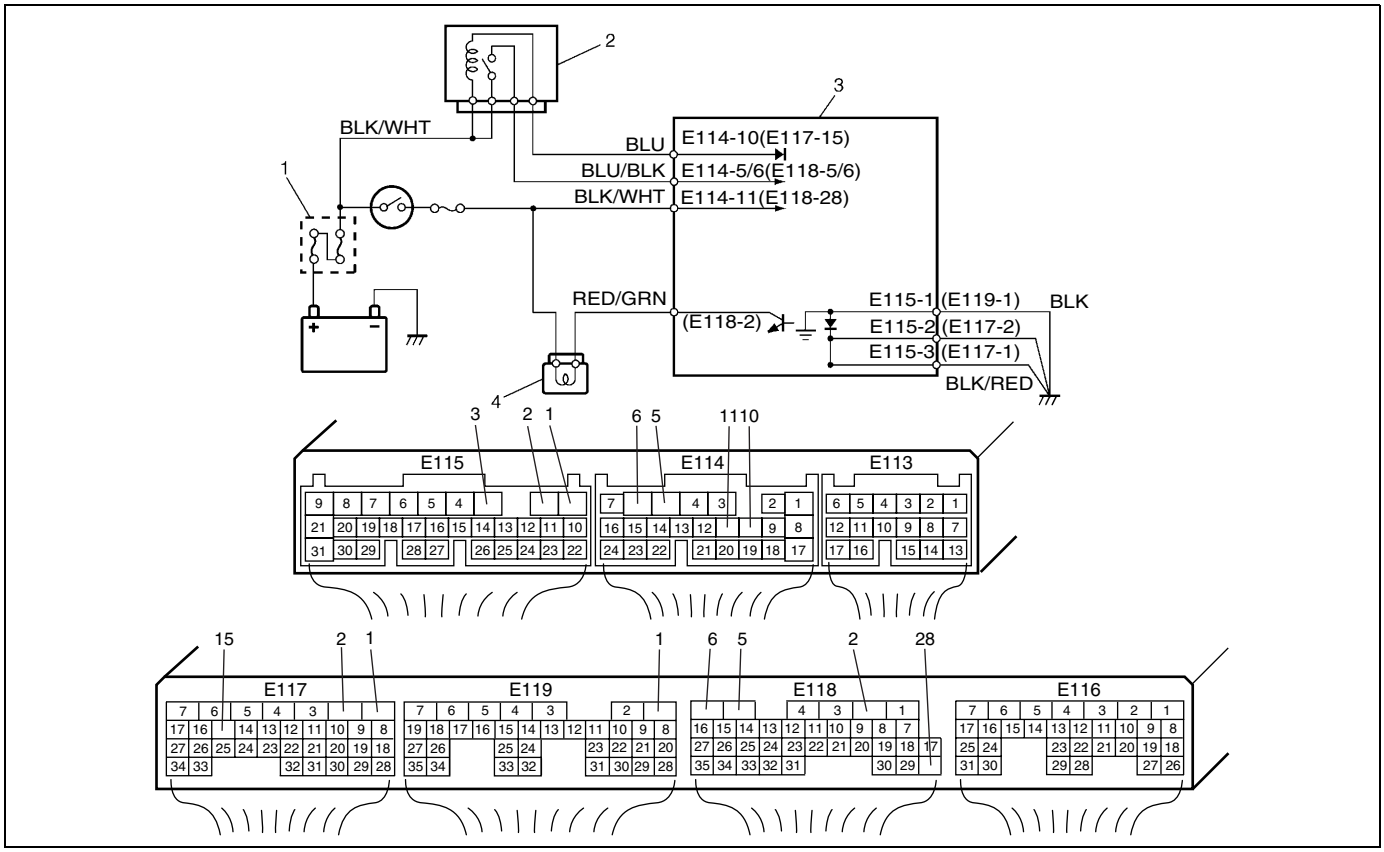

1. Main fuse	2. Main relay	3. ECM	4. Immobilizer indicator lamp (if equipped)

NOTE:

Upper terminal layout is for engine without VVT.
Lower terminal layout is for engine with VVT.

Step	Action	Yes	No
1	1) Turn ignition switch ON. Do other indicator / warning lights in combination meter come ON?	Go to Step 2.	"IG" fuse blown, main fuse blown, ignition switch malfunction, "BLK/WHT" circuit between "IG" fuse and combination meter or poor coupler connection at combination meter.
2.	1) Turn ignition switch OFF and disconnect connectors from ECM. 2) Check for proper connection to ECM at terminal E114-8 (E118-2). 3) If OK, then using service wire, ground terminal E114-8 (E118-2) in connector disconnected. Does immobilizer indicator lamp turn on at ignition switch ON?	Substitute a known-good ECM and recheck.	Bulb burned out or "BLU" wire circuit open.

Table C Immobilizer Indicator Lamp Check for Vehicle Equipped with Immobilizer Indicator Lamp (Immobilizer Indicator Lamp Remains on After Engine Starts)

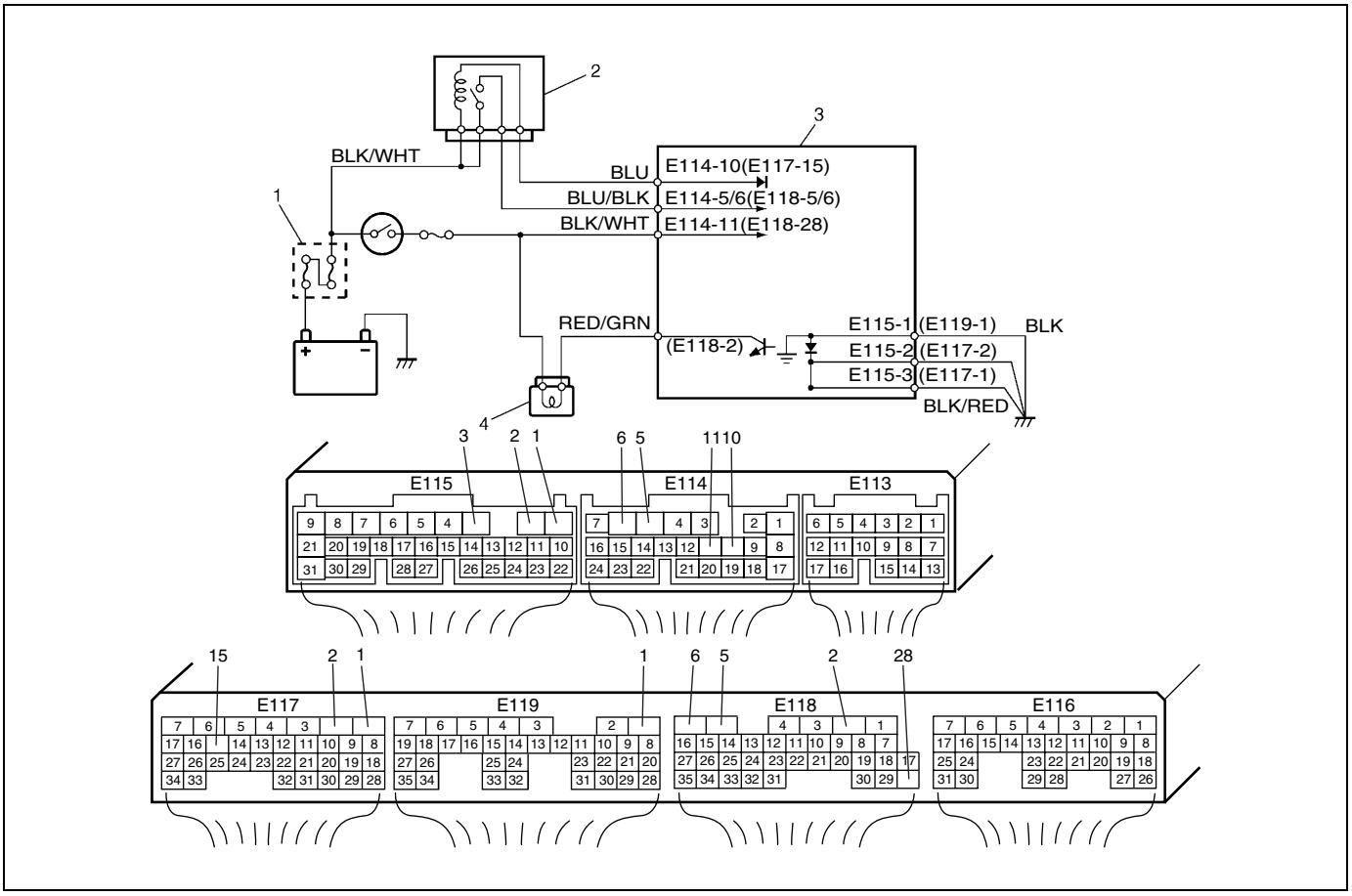

1. Main fuse	2. Main relay	3. ECM	4. Immobilizer indicator lamp (if equipped)

NOTE:

Upper terminal layout is for engine without VVT.
Lower terminal layout is for engine with VVT.

Step	Action	Yes	No
1	1) With ignition switch OFF, disconnect couplers from ECM. Does immobilizer indicator lamp turn ON at ignition switch ON?	"RED/GRN" wire shorted to ground circuit.	Substitute a known-good ECM and recheck.

DTC23 No ECM / Immobilizer Control Module Code Transmitted From ECM or DLC Circuit Opened / Shorted

DTC83 (P1621) No ECM / Immobilizer Control Module Code Transmitted From Immobilizer Control Module or DLC Circuit Opened / Shorted

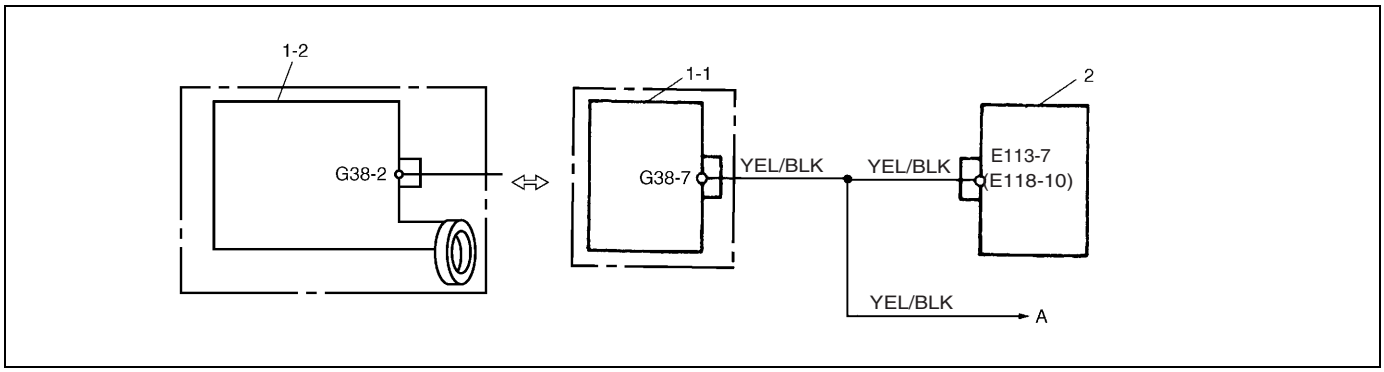

1-1. Immobilizer Control Module (Vehicle not equipped with air bag system)	1-2. Immobilizer Control Module (Vehicle equipped with air bag system)	2. ECM	A. To data link connector (DLC)

NOTE:

Upper terminal number is for engine without VVT.
Lower terminal number is for engine with VVT.

Description:

When the ignition switch is ON, Immobilizer Control Module requests ECM and ECM requests Immobilizer Control Module to transmit ECM / Immobilizer Control Module code. If ECM / Immobilizer Control Module code is not transmitted from ECM or Immobilizer Control Module, Immobilizer Control Module sets DTC23 and ECM sets DTC83.

Inspection:

Step	Action	Yes	No
1	Check voltage between Immobilizer Control Module coupler terminal shown below and body ground with ignition switch turned ON. (See Fig. 1) • Terminal for vehicle without air bag system: “G38-7” • Terminal for vehicle with air bag system: “G38-2” Is it 4 – 5 V?	Go to Step 2.	“YEL/BLK” wire short.

Step	Action	Yes	No
2	1) Disconnect ECM coupler with ignition switch turned OFF. 2) Is there continuity between Immobilizer Control Module coupler terminal shown below and serial data link terminal E114-2 (E118-10) of ECM coupler? (For positions of Data link connector terminal of ECM coupler, refer to "System and Location" in this section.) • Terminal for vehicle without air bag system: "G38-7" • Terminal for vehicle with air bag system: "G38-2"	<Vehicle without air bag system> Poor G38-7 terminal connection or poor data link connector terminal connection (ECM) <Vehicle with air bag system> Poor G38-2 terminal connection or poor data link connector terminal connection (ECM) If connections are OK, substitute a known-good ECM or Immobilizer Control Module and recheck. See NOTE.	"YEL/BLK" wire between Immobilizer Control Module and ECM open.

NOTE:

- **After replacing with a known-good ECM, register ECM / Immobilizer Control Module code in ECM by performing procedure described in "Procedure After ECM Replacement" in this section.**
- **After replacing with a known-good Immobilizer Control Module, register ECM / Immobilizer Control Module code in ECM and Transponder code and ECM / Immobilizer Control Module code in Immobilizer Control Module by performing procedure described in "Procedure After Immobilizer Control Module Replacement" in this section.**

Fig. 1 for step 1

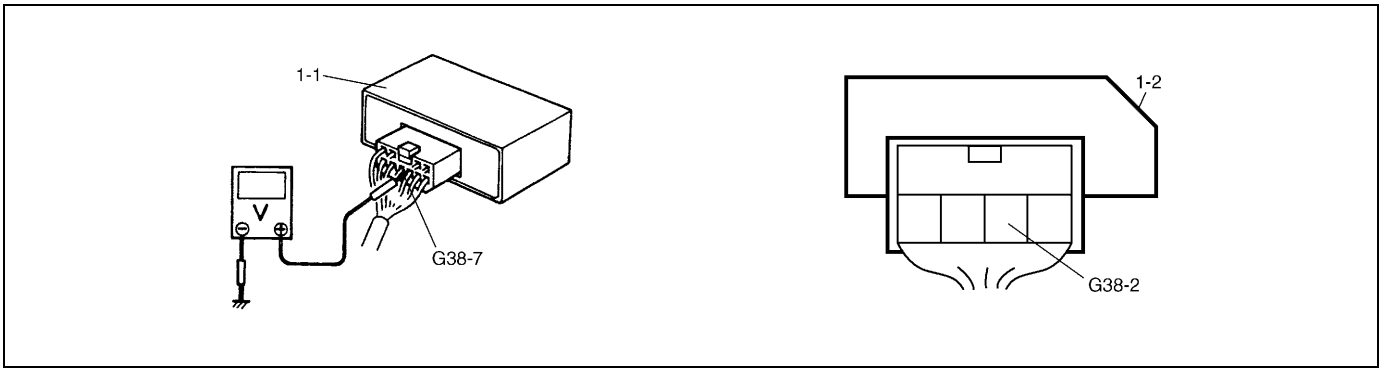

1-1. Immobilizer Control Module (Vehicle not equipped with air bag system)
1-2. Immobilizer Control Module (Vehicle equipped with air bag system)

Fig. 2 for step 2

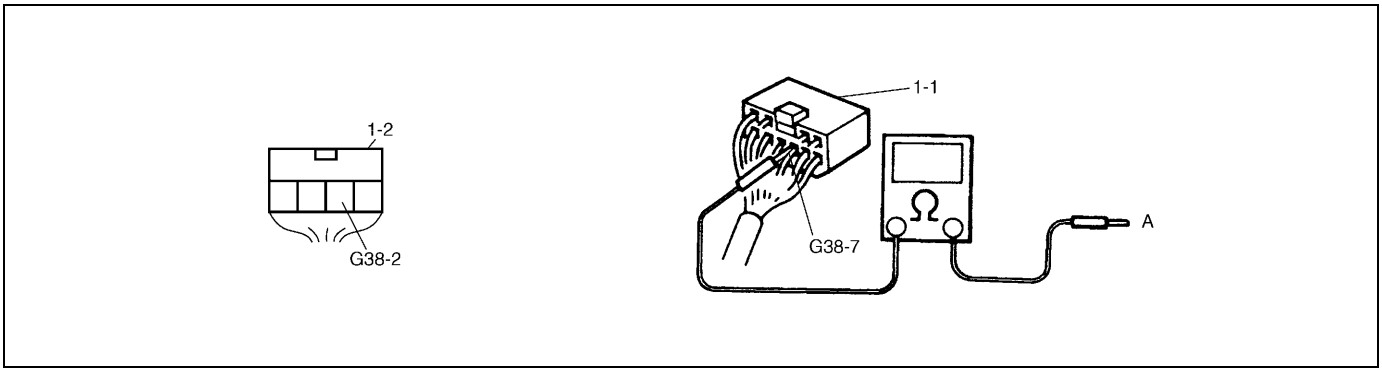

1-1. Immobilizer Control Module coupler disconnected (Vehicle not equipped with air bag system)
1-2. Immobilizer Control Module coupler disconnected (Vehicle equipped with air bag system)
A. Connect to serial data link terminal (E18-12) of ECM coupler disconnected

SECTION 8G2

IMMOBILIZER CONTROL SYSTEM (K9K ENGINE MODEL)

WARNING:

For vehicles equipped with a Supplemental Restraint (Air Bag) System:

- **Service on and around the air bag system components or wiring must be performed only by an authorized SUZUKI dealer. Refer to "Air Bag System Components and Wiring Location View" under "General Description" in air bag section in order to confirm whether you are performing service on or near the air bag system components or wiring. Please observe all WARNINGs and "Service Precautions" under "On-Vehicle Service" in air bag system section before performing service on or around the air bag system components or wiring. Failure to follow WARNINGs could result in unintentional activation of the system or could render the system inoperative.**
  Either of these two conditions may result in severe injury.
- **Technical service work must be started at least 90 seconds after the ignition switch is turned to the "LOCK" position and the negative cable is disconnected from the battery. Otherwise, the system may be activated by reserve energy in the Sensing and Diagnostic Module (SDM).**

NOTE:

For the items with asterisk (*) the "CONTENTS" below, refer to the same section of the Service Manual mentioned in "FOREWORD" of this manual.

8G2

CONTENTS

General Description 8G2-2
- Immobilizer Control System Description .... 8G2- *
- Immobilizer Control System Wiring Circuit Diagram 8G2-2
- Immobilizer Control System Components Location ..... 8G2- *
- On-Board Diagnostic System Description ..... 8G2- *

Diagnosis ..... 8G2- *
- Precautions in Diagnosing Troubles ..... 8G2- *
- Precautions for Replacing ECM or Immobilizer Control Module ..... 8G2- *
- Diagnostic Flow Table ..... 8G2- *
- Diagnostic Trouble Code (DTC) Check ..... 8G2- *
- Diagnostic Trouble Code (DTC) Clearance ..... 8G2- *
- Diagnostic Trouble Code (DTC) Table ..... 8G2- *
- Scan Tool Data ..... 8G2- *
- Inspection of Immobilizer Control Module and Its Circuits ..... 8G2- *
- DTC 16: Communication Line Between Immobilizer Control Module and Coil Antenna Shorted to Ground Circuit or Open ..... 8G2- *
- DTC 21: Communication Line Between Immobilizer Control Module and Coil Antenna Shorted to Power Circuit ..... 8G2- *
- DTC 70: Immobilizer Control Module Internal Failure ..... 8G2- *
- General Troubleshooting of Immobilizer Control System ..... 8G2- *

On-vehicle Service ..... 8G2- *
- Precautions in Handling Immobilizer Control System ..... 8G2- *
- Immobilizer Control Module Removal and Installation ..... 8G2- *
- Coil Antenna Removal and Installation ..... 8G2- *
- Coil Antenna Inspection ..... 8G2- *
- Registration Procedure of Immobilizer Control System Components ..... 8G2- *
  - Procedure to register ignition key ..... 8G2- *
  - Procedure after Immobilizer Control Module replacement ..... 8G2- *
  - Procedure for ECM replacement ..... 8G2- *

Special Tools ..... 8G2- *

General Description

Immobilizer Control System Wiring Circuit Diagram

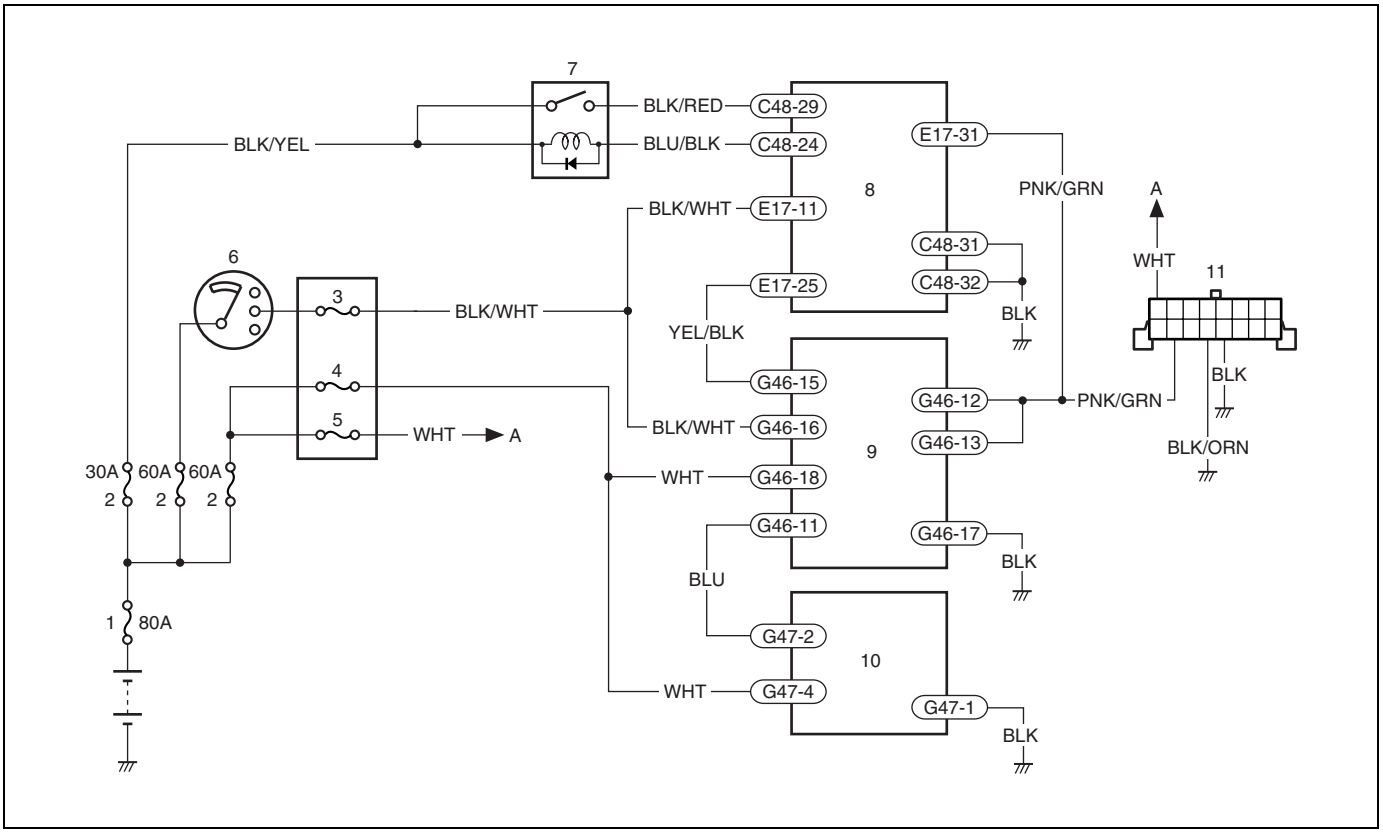

1. Battery	5. “DOME” fuse (15 A)	9. Immobilizer Control Module
2. Fuse	6. Ignition switch	10. Coil antenna
3. “IG-COIL METER” fuse (15 A)	7. Main relay	11. Data link connector (DLC)
4. “IMMOBI” fuse (10 A)	8. ECM	

SECTION 9

BODY SERVICE

WARNING:

For vehicles equipped with a Supplemental Restraint (Air Bag) System:

- **Service on and around the air bag system components or wiring must be performed only by an authorized SUZUKI dealer. Refer to "Air Bag System Components and Wiring Location View" under "General Description" in air bag system section in order to confirm whether you are performing service on or near the air bag system components or wiring. Please observe all WARNINGS and "Service Precautions" under "On-Vehicle Service" in air bag system section before performing service on or around the air bag system components or wiring. Failure to follow WARNINGS could result in unintentional activation of the system or could render the system inoperative. Either of these two conditions may result in severe injury.**
- **Technical service work must be started at least 90 seconds after the ignition switch is turned to the "LOCK" position and the negative cable is disconnected from the battery. Otherwise, the system may be activated by reserve energy in the Sensing and Diagnostic Module (SDM).**
- **When servicing vehicle body, if shock may be applied to air bag system component parts, remove those parts beforehand. (Refer to Section 10B.)**

NOTE:

- **Fasteners are important attaching parts in that they could affect the performance of vital components and systems, and/or could result in major repair expense. They must be replaced with one of the same part number of with an equivalent part if replacement becomes necessary.**
  Do not use a replacement part of lesser quality or substitute a design. Torque values must be used as specified during reassembly to assure proper retention of these parts.
- **For the items with asterisk (*) in the "CONTENTS" below, refer to the same section of the service Manual mentioned in "FOREWORD" of this manual.**

CONTENTS

Glass and Windows ..... 9- *
Front Door Glass ..... 9- *
Front Door Window Regulator ..... 9- *
Windowshield ..... 9- *
Quarter Window ..... 9- *
Back Door Glass ..... 9- *
Body Structure ..... 9- *
Front Door Assembly ..... 9- *
Back Door Assembly ..... 9- *
Under Body Dimensions ..... 9- *
Body Dimensions ..... 9- *
Instrumentation and Driver Information 9-2
Instrument Panel 9-2
Seats 9-4
Front Seat ..... 9- *
Rear Seat 9-4
Paint and Coatings ..... 9- *
Anti-Corrosion Treatment ..... 9- *
Metal Replacement Parts Finishing ..... 9- *
Security and Locks ..... 9- *
Front Door Lock Assembly ..... 9- *
Back Door Lock Assembly ..... 9- *
Exterior and Interior Trim ..... 9- *
Splash Guard ..... 9- *
Roof Rail (If Equipped) ..... 9- *
Tightening Torque Specification 9-5

Instrumentation and Driver Information

Instrument Panel

WARNING:
See WARNING at the beginning of this section.

Removal

1) Disconnect negative cable at battery.
2) Disable air bag system (if equipped) referring to “Disabling Air Bag System” in Section 10B.
3) Remove steering column hole cover.
4) Remove steering column assembly referring to “Steering Column Assembly” in Section 3C.
5) Remove glove box.
6) Remove hood latch release lever.
7) Remove front console box.

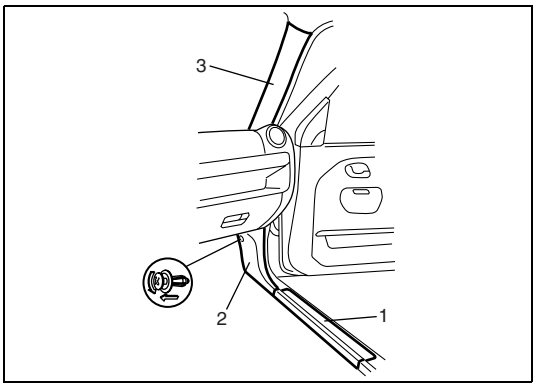

8) Remove front side sill scuffs (1).
9) Remove dash side trims (2).
10) Remove front pillar trims (3).

11) Disconnect instrument panel harness connectors from main and floor harness, heater control cables from heater unit and antenna.

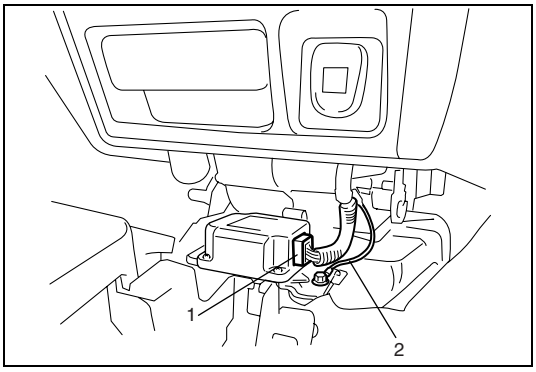

12) Disconnect SDM coupler (1) and air bag ground wire (2). (for vehicle with air bag)

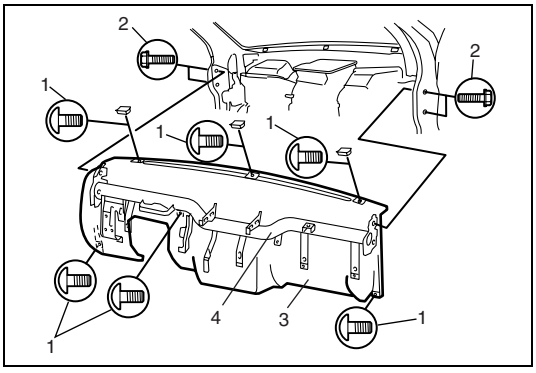

13) Remove instrument panel mounting screws (1).
14) Remove instrument panel mounting bolts (2).
15) Remove instrument panel (3) with steering support member (4) and instrument panel harness.

Installation

Reverse removal procedure noting the following.

- When installing each part, be careful not to catch any cable or wiring harness.

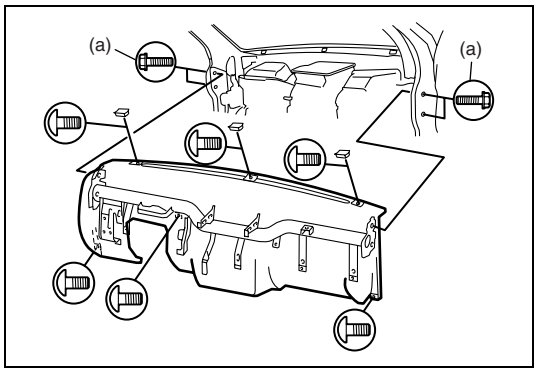

- Tighten instrument panel mounting bolts to specified torque.

Tightening torque
Instrument panel mounting bolts
(a): 23 N·m (2.3 kg-m, 17.0 lb-ft)

- Install steering column assembly referring to “Steering Column Assembly” in Section 3C.
- Adjust control cables referring to “Installation” under “Heater Control Lever Assembly” in Section 1A.
- Enable air bag system (if equipped) referring to “Enabling Air Bag System” in Section 10B.

Seats

Rear Seat

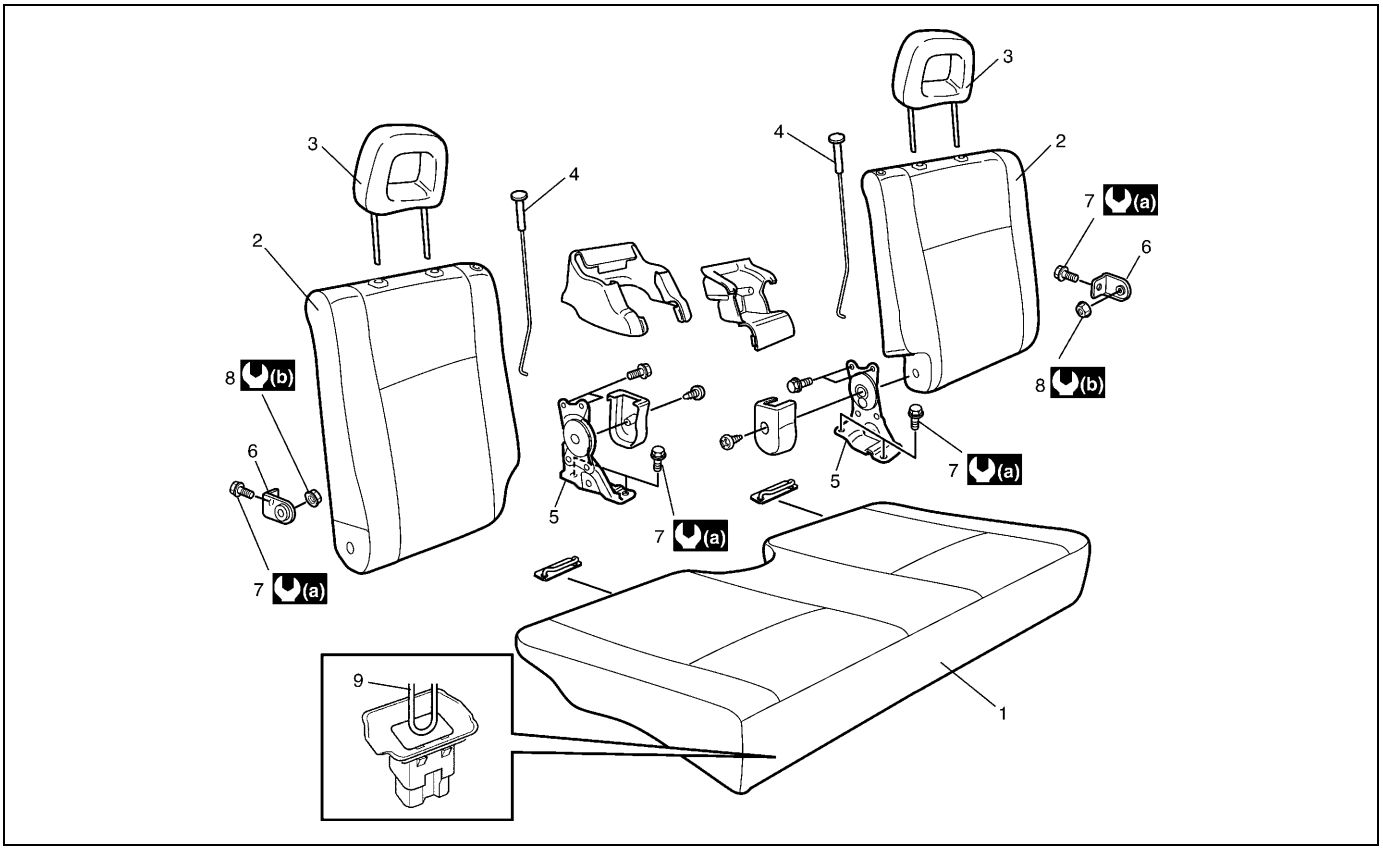

1. Seat cushion	5. Reclining assembly	9. Front end hook
2. Seat back	6. Seat hinge male	(a) 35 N·m (3.5 kg-m, 25.5 lb-ft)
3. Head rest	7. Rear seat mounting bolt	(b) 23 N·m (2.3 kg-m, 17.0 lb-ft)
4. Seat auto lock release handle	8. Seat hinge male nut	

Removal

1) Remove seat cushion.
   Simply pull up front end hook.
2) Remove mounting bolts to remove seat back.
3) Disassemble and repair seat as necessary.

Installation

Reverse removal procedure to install rear seat.
Torque to specifications, as shown.

Tightening Torque Specification

Fastening part	Tightening torque		
	N•m	kg-m	lb-ft
Front door glass attaching screw	6	0.6	4.3
Front door hinge bolt	27	2.7	19.5
Instrument panel mounting bolt	23	2.3	17.0
Rear seat mounting bolt	35	3.5	25.5
Seat hinge male nut	23	2.3	17.0
Door latch striker screw	10	1.0	7.2
Door latch screw	6	0.6	4.3

SECTION 10B

AIR BAG SYSTEM

WARNING:

- **Service on or around the air bag system components or wiring must be performed only by an authorized SUZUKI dealer. Please observe all WARNINGS and "Service Precautions" under "On-Vehicle Service" in this section before performing service on or around the air bag system components or wiring. Failure to follow WARNINGS could result in unintended activation of the system or could render the system inoperative. Either of these two conditions may result in severe injury.**
- **The procedures in this section must be followed in the order listed to disable the air bag system temporarily and prevent false diagnostic trouble codes from setting. Failure to follow procedures could result in possible activation of the air bag system, personal injury or otherwise unneeded air bag system repairs.**

CAUTION:

When fasteners are removed, always reinstall them at the same location from which they were removed. If a fastener needs to be replaced, use the correct part number fastener for that application. If the correct part number fastener is not available, a fastener of equal size and strength (or stronger) may be used. Fasteners that are not reused, and those requiring thread-locking compound, will be called out. The correct torque value must be used when installing fasteners that require it. If the above conditions are not followed, parts or system damage could result.

NOTE:

For the items with asterisk (*) in the "CONTENTS" below, refer to the same section of the Service Manual mentioned in "FOREWORD" of this manual.

10B

CONTENTS

General Description 10B-3
System Components and Wiring Location View and Connectors 10B-3
System Wiring Diagram 10B-4
Diagnosis ..... 10B- *
Diagnostic Trouble Code (DTC) ..... 10B- *
Use of Special Tool ..... 10B- *
Intermittents and Poor Connections ..... 10B- *
Air Bag Diagnostic System Check ..... 10B- *
Air Bag Diagnostic System Check Flow Table ..... 10B- *
DTC Check 10B-6
DTC Clearance 10B-7
DTC Table 10B-8
"AIR BAG" Warning Lamp Circuit Trouble Diagnosis Table 10B-10
"AIR BAG" warning lamp comes on steady 10B-11
"AIR BAG" warning lamp does not come on 10B-12
"AIR BAG" warning lamp flashes 10B-14
"AIR BAG" warning lamp can not indicate flashing 10B-15
SDM Serial Data Circuit Toruble Diagnosis Table 10B-16
DTC B1015 – Passenger Air Bag Initiator Circuit Resistance High 10B-18
DTC B1016 – Passenger Air Bag Initiator Circuit Resistance Low 10B-18
DTC B1018 – Passenger Air Bag Initiator Circuit Short to Ground 10B-18
DTC B1019 – Passenger Air Bag Initiator Circuit Short to Power Circuit 10B-18
DTC B1021 – Driver Air Bag Initiator Circuit Resistance High 10B-23
DTC B1022 – Driver Air Bag Initiator Circuit Resistance Low 10B-23
DTC B1024 – Driver Air Bag Initiator Circuit Short to Ground 10B-23
DTC B1025 – Driver Air Bag Initiator Circuit Short to Power Circuit 10B-23
DTC B1032 – Power Source Voltage Low 10B-30

DTC B1035 – Forward Sensor Circuit Open or Short to Power Circuit (K9K engine model) 10B-32
DTC B1036 – Forward Sensor Circuit Short Between Two Wires or Short to Ground (K9K engine model) 10B-32
DTC B1041 – Driver Pretensioner Initiator Circuit Resistance High (LH Steering Vehicle) Passenger Pretensioner Initiator Circuit Resistance High (RH Steering Vehicle) 10B-35
DTC B1042 – Driver Pretensioner Initiator Circuit Resistance Low (LH Steering Vehicle) Passenger Pretensioner Initiator Circuit Resistance Low (RH Steering Vehicle) 10B-35
DTC B1043 – Driver Pretensioner Initiator Circuit Short to Ground (LH Steering Vehicle) Passenger Pretensioner Initiator Circuit Short to Ground (RH Steering Vehicle) 10B-35
DTC B1044 – Driver Pretensioner Initiator Circuit Short to Power Circuit (LH Steering Vehicle) Passenger Pretensioner Initiator Circuit Short to Power Circuit (RH Steering Vehicle) 10B-35
DTC B1045 – Passenger Pretensioner Initiator Circuit Resistance High (LH Steering Vehicle) Driver Pretensioner Initiator Circuit Resistance High (RH Steering Vehicle) 10B-35
DTC B1046 – Passenger Pretensioner Initiator Circuit Resistance Low (LH Steering Vehicle) Driver Pretensioner Initiator Circuit Resistance Low (RH Steering Vehicle) 10B-35
DTC B1047 – Passenger Pretensioner Initiator Circuit Short to Ground (LH Steering Vehicle) Driver Pretensioner Initiator Circuit Short to Ground (RH Steering Vehicle) 10B-35
DTC B1048 – Passenger Pretensioner Initiator Circuit Short to Power Circuit (LH Steering Vehicle) Driver Pretensioner Initiator Circuit Short to Power Circuit (RH Steering Vehicle) 10B-35
DTC B1051 – Frontal Crash Detected (System Activation Command Outputted) ..... 10B- *
DTC B1071 – Internal SDM Fault ..... 10B- *
DTC B1013 – System Specifications Different from SDM Specifications ..... 10B- *
On-vehicle Service 10B-44
Service Precautions 10B-44
Service and diagnosis 10B-44
Disabling air bag system 10B-45
Enabling air bag system 10B-45
Handling and storage 10B-46
Disposal 10B-50
Air bag wire harness and connector in instrument panel harness, floor harness, main harness and pretensioner harness 10B-50
Repairs and Inspections Required after an Accident 10B-51
Accident with Deployment / Activation - Component Replacement 10B-51
Accident with or without Deployment / Activation - Component Inspections 10B-51
SDM 10B-54
Forward Sensor 10B-55
Passenger Air Bag (Inflator) Module 10B-58
Driver Air Bag (Inflator) Module ..... 10B- *
Contact Coil and Combination Switch Assembly ..... 10B- *
Seat Belt Pretensioner ..... 10B- *
Air Bag (Inflator) Module and Seat Belt Pretensioner Disposal 10B-60
Deployment / Activation Outside of Vehicle 10B-61
Deployment / Activation Inside Vehicle 10B-68
Deployed Air Bag (Inflator) Module and Activated Seat Belt Pretensioner Disposal ..... 10B- *
Tightening Torque Specification 10B-72
Special Tool 10B-72

General Description

System Components and Wiring Location View and Connectors

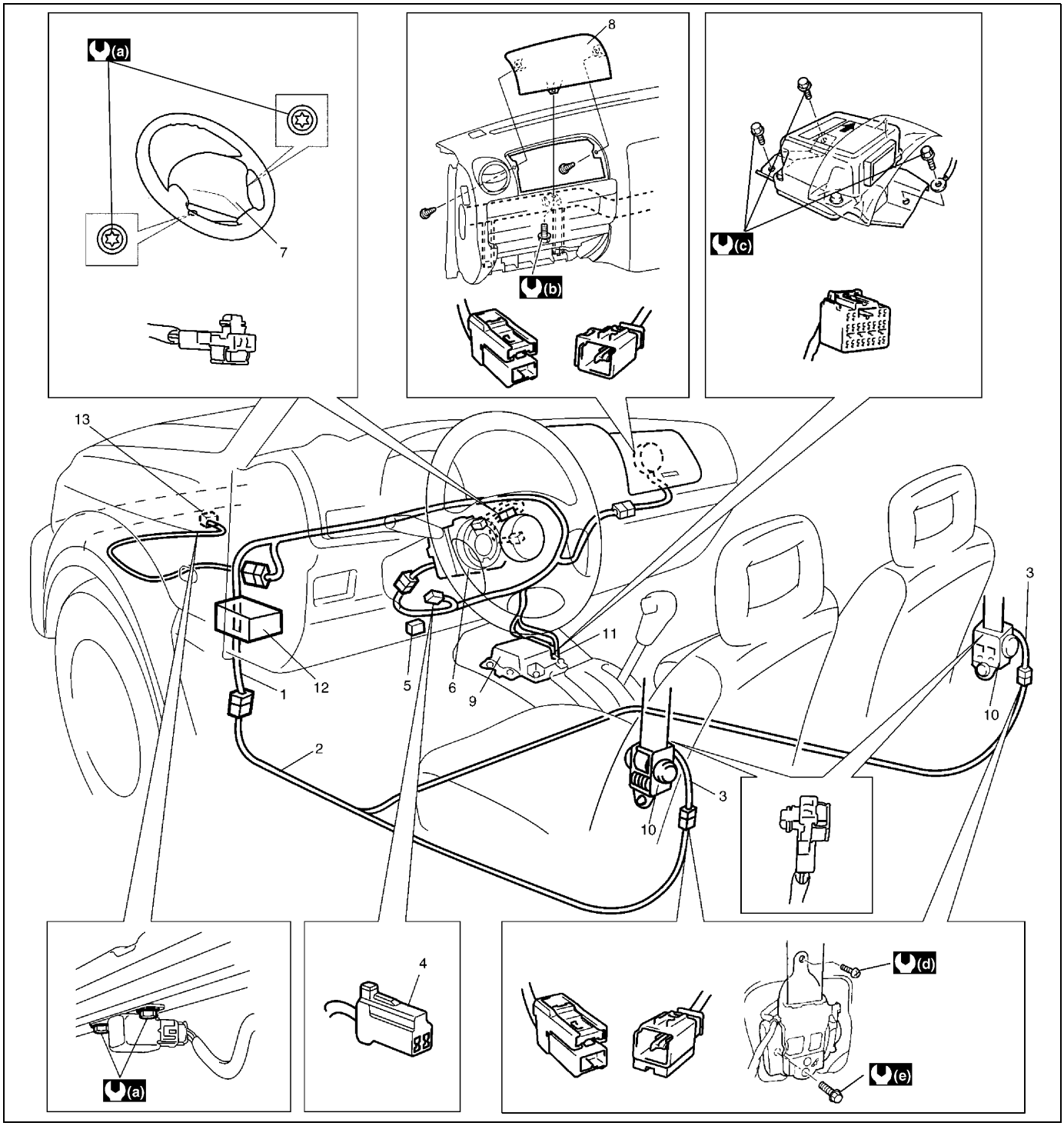

1. Air bag harness in instrument panel harness	10. Seat belt pretensioner (retractor assembly)
2. Air bag harness in floor harness	11. Ground for air bag system
3. Air bag harness in seat belt pretensioner harness	12. “AIR BAG” fuse in circuit fuse box
4. “Air bag” monitor coupler	13. Forward sensor (K9K engine model only)
5. DLC	(a) 9 N·m (0.9 kg-m, 6.5 lb-ft)
6. Contact coil assembly	(b) 23 N·m (2.3 kg-m, 17.0 lb-ft)
7. Driver air bag (inflator) module	(c) 6 N·m (0.6 kg-m, 4.5 lb-ft)
8. Passenger air bag (inflator) module	(d) 5.5 N·m (0.55 kg-m, 4.0 lb-ft)
9. SDM	(e) 35 N·m (3.5 kg-m, 25.5 lb-ft)

System Wiring Diagram

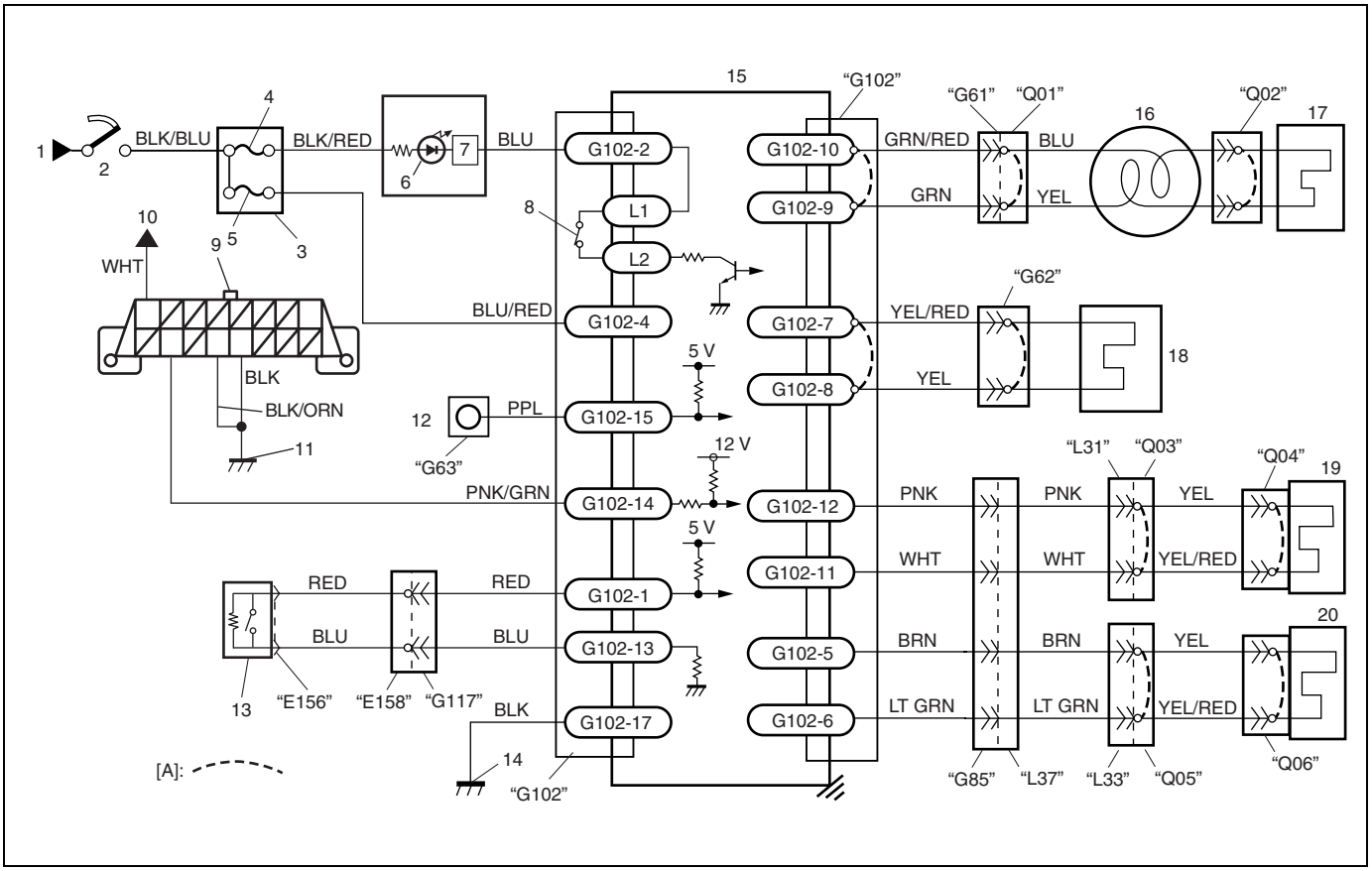

[A]: Shorting bar	7. Lamp driver	14. Ground for air bag system
1. To main fuse box	8. Connection detection pin	15. SDM
2. Ignition switch	9. Data link connector (DLC)	16. Contact coil assembly
3. Circuit fuse box	10. To circuit fuse box	17. Driver air bag (inflator) module
4. "METER" fuse	11. Ground on body	18. Passenger air bag (inflator) module
5. "AIR BAG" fuse	12. "AIR BAG" monitor coupler	19. Driver seat belt pretensioner (LH steering vehicle) Passenger seat belt pretensioner (RH steering vehicle)
6. "AIR BAG" warning lamp in combination meter	13. Forward sensor (K9K engine model only)	20. Passenger seat belt pretensioner (LH steering vehicle) Driver seat belt pretensioner (RH steering vehicle)

TERMINAL ARRANGEMENT OF SDM CONNECTOR "G102" VIEWED FROM HARNESS SIDE

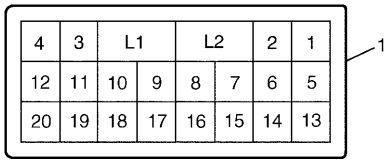

1. SDM connector "G102"

SDM connector “G102” terminal description

TERMINAL	CIRCUIT		TERMINAL	CIRCUIT	
G102-1	Forward sensor (+) (K9K engine model only)		G102-11	Driver pretensioner (LH steering vehicle)	Low
G102-2	“AIR BAG” warning lamp		G102-12	Passenger pretensioner (RH steering vehicle)	High
G102-3	–		G102-13	Forward sensor (–) (K9K engine model only)	
G102-4	Ignition switch (power source)		G102-14	Data link connector (DLC)	
G102-5	Passenger pretensioner (LH steering vehicle)	High	G102-15	Diagnosis switch	
G102-6	Driver pretensioner (RH steering vehicle)	Low	G102-16	–	
G102-7	Passenger air bag (inflator) module	High	G102-17	Ground	
G102-8		Low	G102-18	–	
G102-9	Driver air bag (inflator) module	Low	G102-19	–	
G102-10		High	G102-20	–	

DTC Check

Using SUZUKI Scan Tool

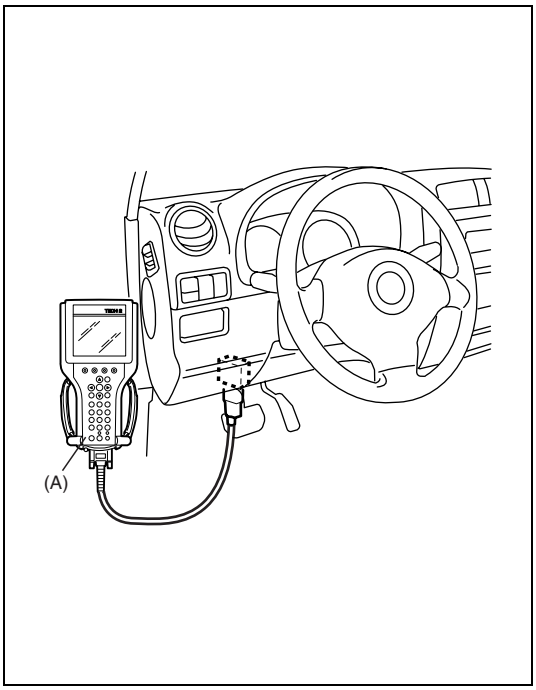

1) Turn ignition switch to OFF position.
2) After setting SUZUKI scan tool, connect it to data link connector (DLC) located on underside of instrument panel at driver's seat side.

Special tool
(A): SUZUKI scan tool

3) Turn ignition switch to ON position.
4) Read DTC according to instructions displayed on SUZUKI scan tool and print it or write it down referring to SUZUKI scan tool operator's manual for further details.
   If communication between scan tool and SDM is not possible, proceed to "SDM Serial Data Circuit Trouble Diagnosis Table" in this section.
5) After completing the check, turn ignition switch to OFF position and disconnect SUZUKI scan tool from data link connector (DLC).

1. Data link connector (DLC)

Not Using SUZUKI Scan Tool

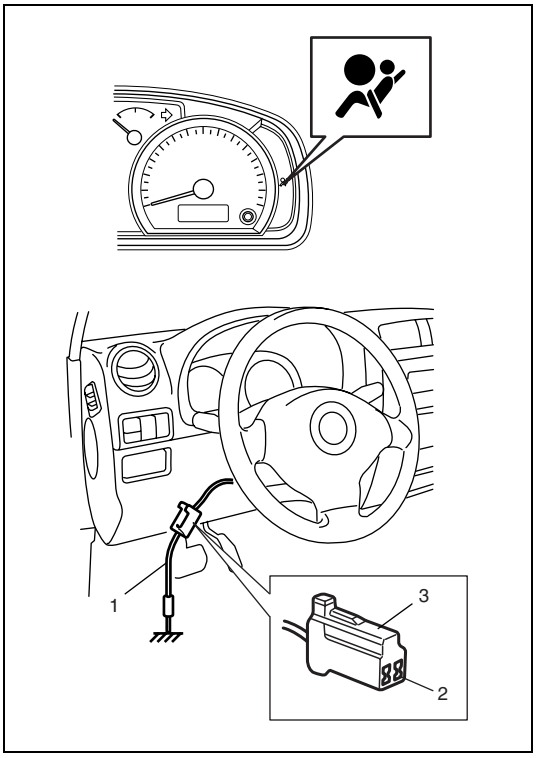

1) Check that "AIR BAG" warning lamp comes ON when ignition switch is turned to ON position.
   If it does not come "ON", proceed to ""AIR BAG" Warning Lamp Does Not Come On" in this section.
2) Using service wire (1), ground diagnosis switch terminal (2) in monitor coupler (3).
3) Read DTC from flashing pattern of "AIR BAG" warning lamp referring to "DTC TABLE" in this section.
   If lamp does not indicate DTC, proceed to ""AIR BAG" Warning Lamp Can Not Indicate Flashing" in this section.
4) After completing the check, turn ignition switch to OFF position and disconnect service wire from "AIR BAG" monitor coupler.

EXAMPLE: When driver air bag initiator circuit resistance high (DTC B1021) is set

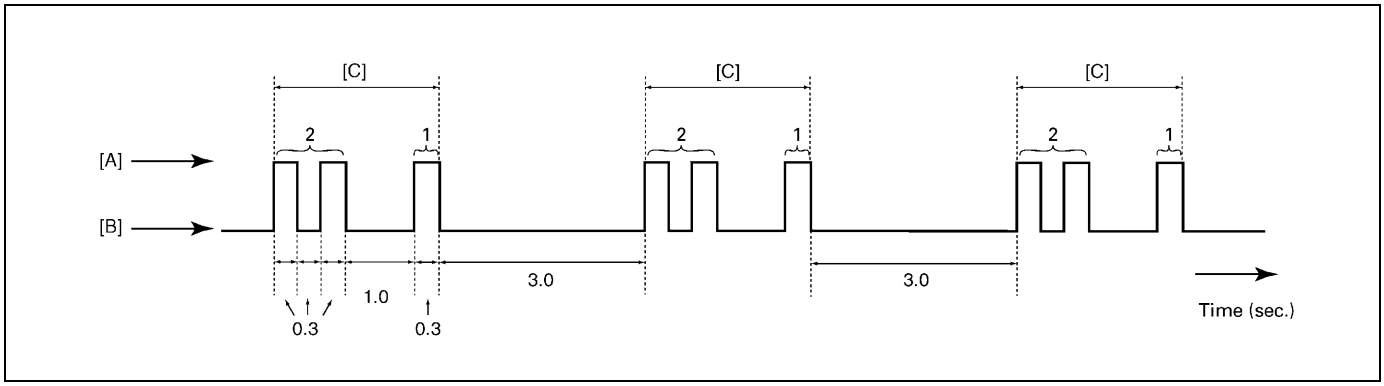

[A]: "AIR BAG" warning lamp is turned ON
[B]: "AIR BAG" warning lamp is turned OFF
[C]: Code No.21

DTC Clearance

Using SUZUKI Scan Tool

1) Turn ignition switch to OFF position.
2) Connect SUZUKI scan tool to data link connector (DLC) in the same manner as when making this connection for DTC check.

Special tool
(A): SUZUKI scan tool

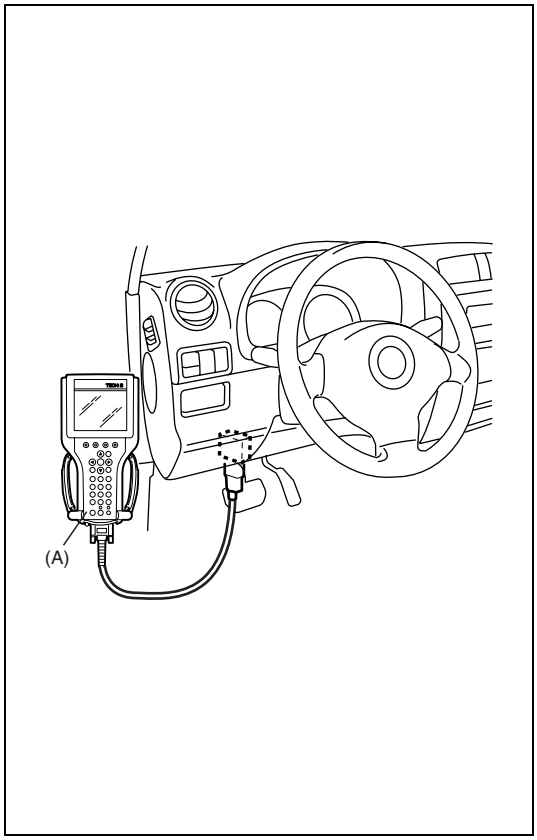

3) Turn ignition switch to ON position.
4) Erase DTC according to instructions displayed on SUZUKI scan tool.
   Refer to SUZUKI scan tool operator's manual for further details.
5) After completing the check, turn ignition switch to OFF position and disconnect SUZUKI scan tool from DLC.
6) Perform "DTC Check" in this section, and confirm that normal DTC ("NO CODES") is displayed and not malfunction DTC.

NOTE:

If DTC B1051 or DTC B1071 is stored in SDM, it is not possible to clear DTC.

1. Data link connector (DLC)

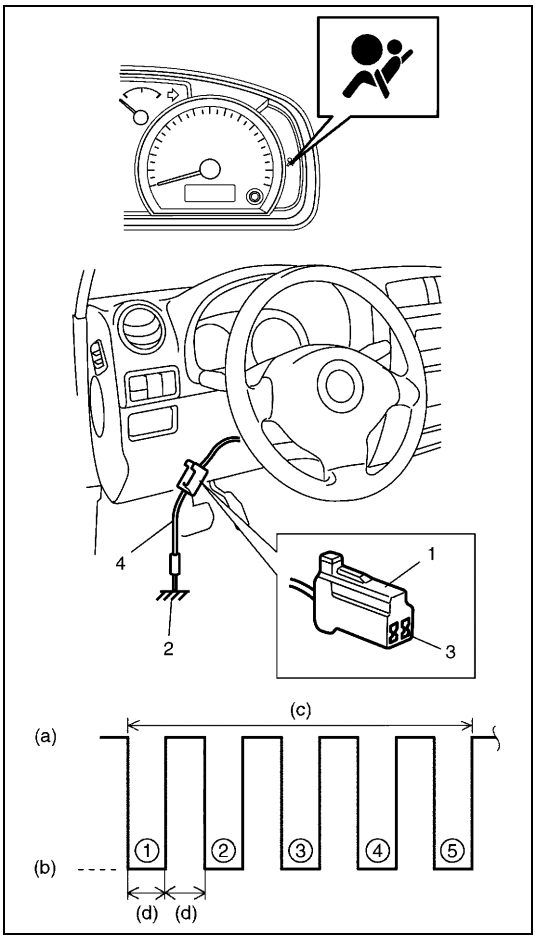

Not Using SUZUKI Scan Tool

1) Turn ignition switch to ON position and wait about 6 seconds or more.
2) Using service wire, repeat shorting and opening between diagnosis switch terminal on "AIR BAG" monitor coupler and body ground 5 times at about 1 second intervals.
3) Perform "DTC Check" in this section, and confirm that normal DTC (DTC 12) is displayed and not malfunction DTC.

NOTE:

If DTC B1051 or DTC B1071 is stored in SDM, it is not possible to clear DTC.

1. "AIR BAG" monitor coupler	(a) Open
2. Body ground	(b) Short
3. Diagnosis switch terminal	(c) About 10 seconds
4. Service wire	(d) 1 sec.

DTC Table

DTC	"AIR BAG" warning lamp flashing pattern		Diagnosis		
	NO.	MODE			
–	12		Normal		–
B1015	15		Passenger air bag circuit	Resistance high	Diagnose trouble according to diagnostic flow table corresponding to each code No.
B1016	16			Resistance low	
B1018	18			Short to ground	
B1019	19			Short to power circuit	
B1021	21		Driver air bag circuit	Resistance high	
B1022	22			Resistance low	
B1024	24			Short to ground	
B1025	25			Short to power circuit	
B1032	32		Power source voltage	Too low	

DTC	"AIR BAG" warning lamp flashing pattern		Diagnosis		
	NO.	MODE			
B1035	35		Forward sensor circuit	Open or short to power circuit	Diagnose trouble according to diagnostic flow table corresponding to each code No.
B1036	36	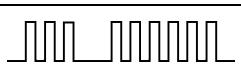		Short between two wires or short to ground.	
B1041	41		Driver pretensioner circuit (LH steering vehicle) Passenger pretensioner circuit (RH steering vehicle)	Resistance high	
B1042	42			Resistance low	
B1043	43			Short to ground	
B1044	44	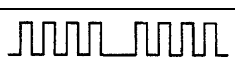		Short to power circuit	
B1045	45		Passenger pretensioner circuit (LH steering vehicle) Driver pretensioner circuit (RH steering vehicle)	Resistance high	
B1046	46	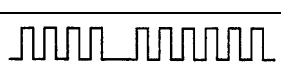		Resistance low	
B1047	47	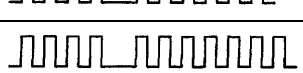		Short to ground	
B1048	48	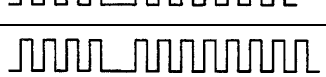		Short to power circuit	
B1051	51	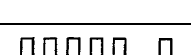	SDM	Frontal crash detected	
B1071	71	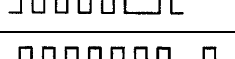	SDM	Internal fault	
B1013	13	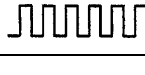		Specifications different between air bag system and SDM	

NOTE:

- **When 2 or more codes are indicated, the lowest numbered code will appear first.**
- **Current DTC and history DTC can be identified by lighting and flashing of "AIR BAG" warning lamp as follows. However, if a multiple number of DTC's are set an even one of them is a current DTC, "AIR BAG" warning lamp remains on after ignition switch is turned ON. Therefore, it is not possible to identify any of them as to whether it is a current one or a history one. (But use of SUZUKI scan tool will make identification possible.)**

	Current DTC is set. (Abnormality exists at present.)	**History DTC is set only. (Faulty condition occurred once in the past but normal condition is restored at present.)**
"AIR BAG" warning lamp after ignition switch ON	**Flashing 6 times and turns on.**	**Flashing 6 times and turns off.**
"AIR BAG" warning lamp when grounding diagnosis switch	**Current DTC is displayed.**	**History DTC is displayed.**

“AIR BAG” Warning Lamp Circuit Trouble Diagnosis Table

WIRING DIAGRAM

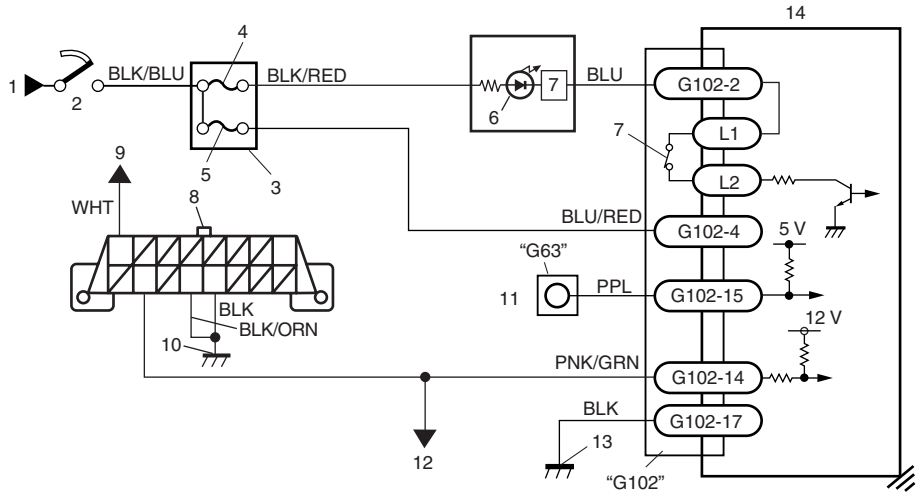

1. From main fuse	6. “AIR BAG” warning lamp in combination meter	11. “AIR BAG” monitor coupler
2. Ignition switch	7. Connection detection pin	12. To ECM, TCM and ABS control module (if equipped)
3. Circuit fuse box	8. Data link connector	13. Ground for air bag system
4. “METER” fuse	9. To circuit fuse box	14. SDM
5. “AIR BAG” fuse	10. Ground on body	

CAUTION:

- **Be sure to perform “Air Bag Diagnostic System Check” in this section before starting diagnosis according to flow table.**
- **When measurement of resistance or voltage is required in this table, use a specified digital multimeter described in “Special Tool” in this section along with a correct terminal adapter from special tool (Connector test adapter kit).**
- **When a check for proper connection is required, refer to “Intermittent and Poor Connections” in this section.**
- **If there is open circuit in the air bag wire harness, connector or terminal is found damaged, replace the wire harness, connector and terminal as an assembly.**

"AIR BAG" warning lamp comes on steady

TABLE TEST DESCRIPTION

STEP 1: Check "AIR BAG" fuse.
STEP 2: Check power source circuit.
STEP 3: Check "AIR BAG" warning lamp circuit.

DIAGNOSTIC FLOW TABLE

Step	Action	Yes	No
1	1) Ignition switch OFF. 2) Remove and inspect "AIR BAG" fuse. Is fuse good?	Go to step 2.	"BLU/RED" wire short to ground. After repair, replace "AIR BAG" fuse.
2	1) Disconnect SDM connector "G102". 2) Check proper connection to SDM at terminal "G102-4". 3) If OK then check voltage between "G102-4" terminal of SDM connector and body ground with ignition switch ON. Is it 8 V or more?	Go to step 3.	"BLU/RED" wire (between "AIR BAG" fuse and SDM connector) open "BLK/BLU" wire (between ignition switch and "AIR BAG" fuse) open or short to ground.
3	1) Disconnect 20-pin combination meter connector "G92" from combination meter referring to "Combination Meter" in Section 8. 2) Check resistance between "G102-2" terminal of SDM connector and body ground. Is resistance 1 MΩ or more?	Substitute a known-good SDM and recheck.	"BLU" wire (between combination meter and SDM connector) short to ground.

[A]

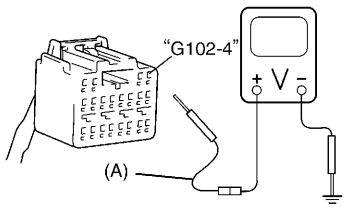

[B]

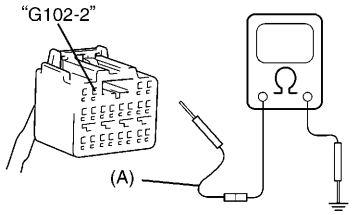

[A]: Fig. for STEP 2
[B]: Fig. for STEP 3

Special tool
(A): 09932-76010

NOTE:

Upon completion of inspection and repair work, perform the following items.

- **Reconnect all air bag system components, ensure all components are properly mounted.**
- **Repeat "Air Bag Diagnostic System Check" in this section to confirm that the trouble has been corrected.**

"AIR BAG" warning lamp does not come on

TABLE TEST DESCRIPTON

STEP 1: Check combination meter power feed circuit.
STEP 2: Check electrical connection check mechanism in SDM connector.
STEP 3: Check "AIR BAG" warning lamp circuit.
STEP 4: Check "AIR BAG" bulb and combination meter.
STEP 5: Check open in "AIR BAG" warning lamp circuit.
STEP 6: Check short from "AIR BAG" warning lamp circuit to power circuit.

DIAGNOSTIC FLOW TABLE

Step	Action	Yes	No
1	1) Set parking brake. 2) Note combination meter when ignition switch is turned ON. Does the "BRAKE" indicator (warning lamp) come ON?	Go to step 2.	"BLK/BLU", "BLK/RED" wire or "METER" fuse open or short to ground
2	1) Disconnect SDM connector "G102". 2) Check electrical connection check mechanism. (Connection detecting pin and "L1" and "L2" terminals for dents, cracks or damages.) Is it in good condition?	Go to step 3.	Repair electrical connection check mechanism.
3	1) Check proper connection to SDM at terminal "G102-2". 2) If OK, check voltage from "G102-2" terminal of SDM connector to body ground with ignition switch ON. Is it 8 V or more?	Substitute a known-good SDM and recheck.	Go to step 4.
4	1) Check proper connection to combination meter at "BLU" terminal for "AIR BAG" warning lamp and to SDM at terminal "G102-2". 2) If OK, check resistance between "BLU" wire terminal of combination meter connector "G92" (20-pin connector) and "G102-2" terminal of SDM connector. Is resistance 1 Ω or less?	Go to step 6.	Repair high resistance or open in "BLU" wire circuit (between combination meter and SDM).
5	1) Measure voltage from "G102-2" terminal of SDM connector to body ground with ignition switch ON. Is it 0 V or more?	Repair short from "BLU" wire circuit (between combination meter and SDM) to power circuit.	Substitute a known-good SDM and recheck.

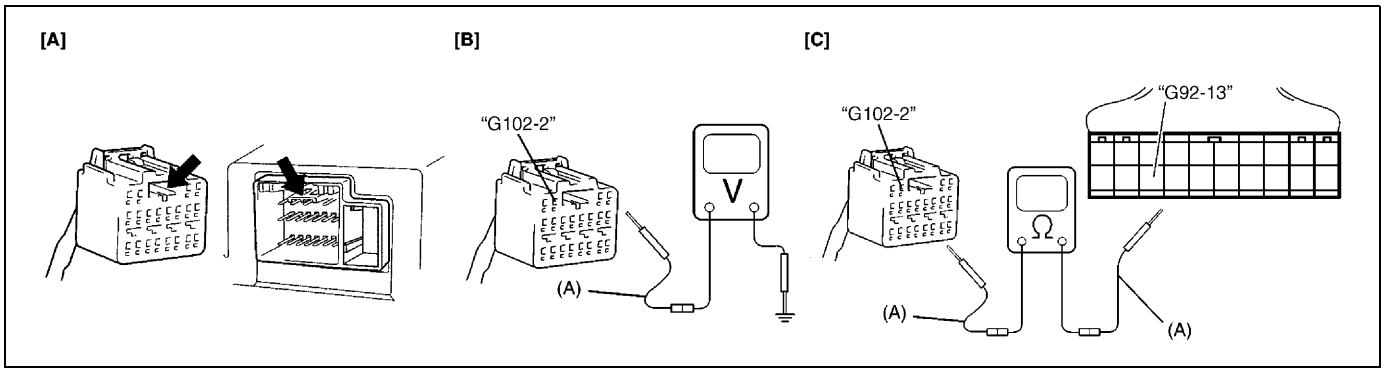

[A]: Fig. for STEP 2	[C]: Fig. for STEP 5
[B]: Fig. for STEP 3 and 6	

Special tool
(A): 09932-76010

NOTE:

Upon completion of inspection and repair work, perform the following items.

- **Reconnect all air bag system components, ensure all components are properly mounted.**
- **Repeat "Air Bag Diagnostic System Check" in this section to confirm that the trouble has been corrected.**

“AIR BAG” warning lamp flashes

TABLE TEST DESCRIPTON

STEP 1: Check “AIR BAG” monitor coupler.
STEP 2: Check diagnosis switch circuit for air bag system.

DIAGNOSTIC FLOW TABLE

Step	Action	Yes	No
1	1) Check “AIR BAG” monitor coupler “G63”. Is it connected diagnosis switch terminal and ground terminal in “AIR BAG” monitor coupler by service wire?	Remove service wire.	Go to step 2.
2	1) With ignition switch OFF, disconnect SDM connector “G102”. 2) Measure resistance between “G102-15” terminal of SDM connector and body ground. Is resistance 1 MΩ or more?	Substitute a known-good SDM and recheck.	Repair short from “PPL” wire circuit to ground.

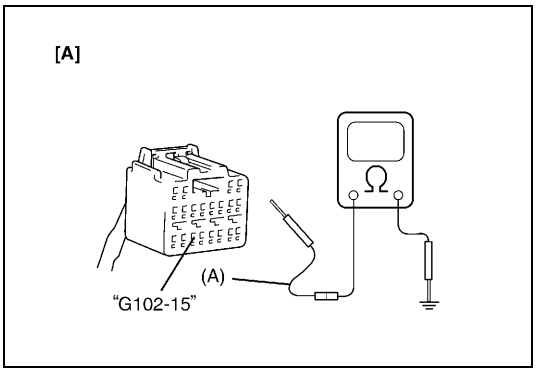

[A]: Fig. for STEP 2

Special tool
(A): 09932-76010

NOTE:

Upon completion of inspection and repair work, perform the following items.

- **Reconnect all air bag system components, ensure all components are properly mounted.**
- **Repeat “Air Bag Diagnostic System Check” in this section to confirm that the trouble has been corrected.**

"AIR BAG" warning lamp can not indicate flashing

TABLE TEST DESCRIPTON

STEP 1: Check "AIR BAG" monitor coupler.
STEP 2: Check diagnosis switch circuit for air bag system.

DIAGNOSTIC FLOW TABLE

Step	Action	Yes	No
1	1) Inspect connection between diagnostic switch terminal on "AIR BAG" monitor coupler "G63" and body ground by service wire. Is it securely connected between them by service wire?	Go to step 2.	Properly connection diagnostic switch terminal on "AIR BAG" monitor coupler and body ground by service wire.
2	1) Disconnect SDM connector "G102" from SDM. 2) Check for proper connection at "PPL" wire ("G102-15" terminal of SDM connector and "G63-2" terminal of "AIR BAG" monitor coupler) terminals. 3) If OK then measure resistance between "G102-15" terminal and "G63-2" terminal. Is resistance 1 Ω or more?	Check "PPL" wire terminals. If OK then "PPL" wire circuit high resistance or open.	Substitute a known good SDM and recheck.

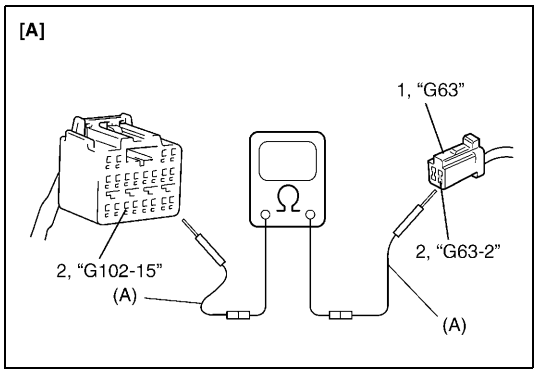

[A]: Fig. for STEP 2
1. "AIR BAG" monitor coupler
2. "PPL" wire terminal

Special tool
(A): 09932-76010

NOTE:

Upon completion of inspection and repair work, perform the following items.

- **Reconnect all air bag system components, ensure all components are properly mounted.**
- **Repeat "Air Bag Diagnostic System Check" in this section to confirm that the trouble has been corrected.**

SDM Serial Data Circuit Toruble Diagnosis Table

WIRING DIAGRAM

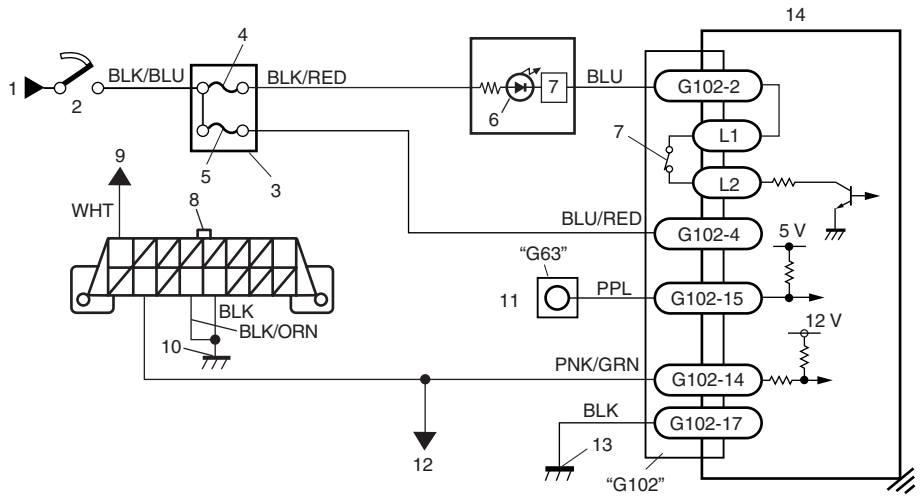

1. From main fuse	6. "AIR BAG" warning lamp in combination meter	11. "AIR BAG" monitor coupler
2. Ignition switch	7. Connection detection pin	12. To ECM, TCM and ABS control module (if equipped)
3. Circuit fuse box	8. Data link connector (DLC)	13. Ground for air bag system
4. "METER" fuse	9. To circuit fuse box	14. SDM
5. "AIR BAG" fuse	10. Ground on body	

CAUTION:

- **Be sure to perform "Air Bag Diagnostic System Check" in this section before starting diagnosis according to flow table.**
- **When measurement of resistance or voltage is required in this table, use a specified digital multimeter described in "Special Tool" in this section along with a correct terminal adapter from special tool (Connector test adapter kit).**
- **When a check for proper connection is required, refer to "Intermittent and Poor Connections" in this section.**
- **If there is open circuit in the air bag wire harness, connector or terminal is found damaged, replace the wire harness, connector and terminal as an assembly.**

TABLE TEST DESCRIPTION

STEP 1: An improper connection to the data link connector (DLC) will prevent communications from being established.
STEP 2: This test checks whether it is possible to communicate with other control module.
STEP 3: This test checks for an open in "PNK/GRN" circuit in air bag harness.

DIAGNOSTIC FLOW TABLE

Step	Action	Yes	No
1	1) Make sure that SUZUKI scan tool is free from malfunction for air bag system is used. 2) Ignition switch OFF. 3) Check proper connection of SUZUKI scan tool to DLC. Is connection in good condition?	Go to step 2.	Properly connect SUZUKI scan tool to DLC.

Step	Action	Yes	No
2	1) Check if communication is possible by trying communication with other control module (ECM, TCM (if equipped) or ABS control module (if equipped)). Is it possible to communicate with other control module?	Go to step 3.	Repair open in common section of serial data circuit (“PNK/GRN” wire circuit) used by all controllers or short to ground or power circuit which has occurred some-where in serial data circuit (“PNK/GRN” wire circuit).
3	1) With ignition switch OFF, disconnect SDM connector “G102”. 2) Check proper connection at “G102-14” (“PNK/GRN” wire) terminal of SDM connector. 3) If OK, then check resistance between “PNK/GRN” wire terminal of DLC and “G102-14” (“PNK/GRN” wire) terminal of SDM connector. Is resistance 1 Ω or less?	Substitute a known-good SDM and recheck.	Repair high resistance or open in “PNK/GRN” wire circuit.

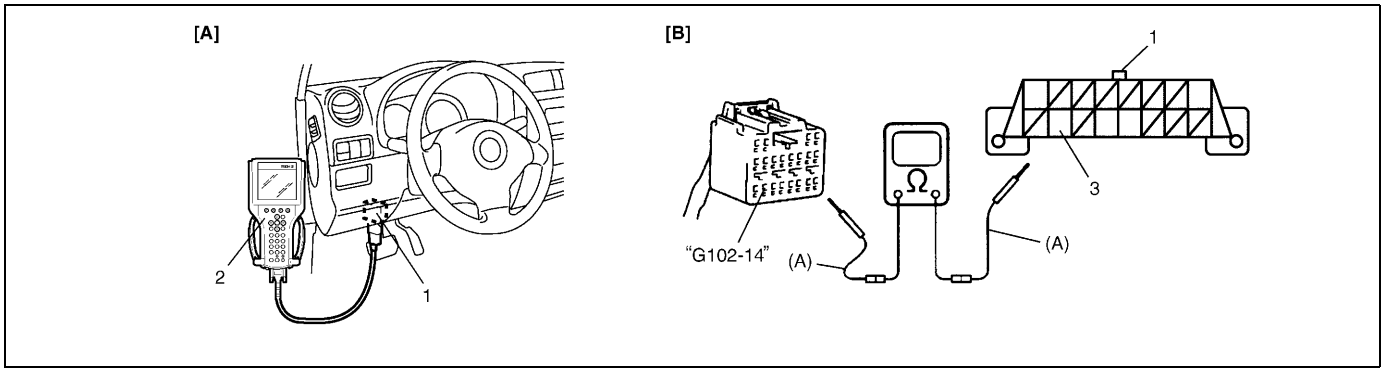

[A]: Fig. for STEP 1	1. DLC	3. “PNK/GRN” wire terminal
[B]: Fig. for STEP 3	2. SUZUKI scan tool	

Special tool
(A): 09932-76010

NOTE:

Upon completion of inspection and repair work, perform following items.

- **Reconnect all air bag system components, ensure all components are properly mounted.**
- **Repeat “Air Bag Diagnostic System Check” in this section to confirm that the trouble has been corrected.**

DTC B1015 – Passenger Air Bag Initiator Circuit Resistance High
DTC B1016 – Passenger Air Bag Initiator Circuit Resistance Low
DTC B1018 – Passenger Air Bag Initiator Circuit Short to Ground
DTC B1019 – Passenger Air Bag Initiator Circuit Short to Power Circuit

WIRING DIAGRAM

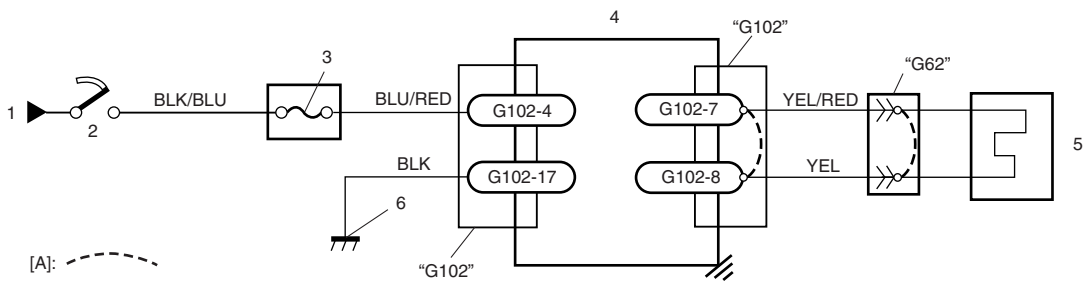

1. From main fuse	3. "AIR BAG" fuse	5. Passenger air bag (inflator) module	[A]: Shorting bar
2. Ignition switch	4. SDM	6. Ground for air bag system	

CAUTION:

- **Be sure to perform "Air Bag Diagnostic System Check" in this section before starting diagnosis according to flow table.**
- **When measurement of resistance or voltage is required in this table, use a specified digital multimeter described in "Special Tool" in this section along with a correct terminal adapter from special tool (Connector test adapter kit).**
- **When a check for proper connection is required, refer to "Intermittent and Poor Connections" in this section.**
- **If there is open circuit in the air bag wire harness, connector or terminal is found damaged, replace the wire harness, connector and terminal as an assembly.**

DTC WILL SET WHEN

DTC B1015:

The combined resistance of the passenger air bag (inflator) module, harness wiring and connector terminal contact is above a specified value for specified time.

DTC B1016:

The combined resistance of the passenger air bag (inflator) module, harness wiring and connector terminal contact is below a specified value for specified time.

DTC B1018:

The voltage measured at passenger air bag initiator circuit is below a specified value for specified time.

DTC B1019:

The voltage measured at passenger air bag initiator circuit is above a specified value for specified time.

TABLE TEST DESCRIPTION

DTC B1015, B1016, B1018 and B1019:

STEP 1: Check whether malfunction is in passenger air bag (inflator) module.
STEP 2: Check passenger air bag (inflator) module initiator circuit in air bag harness.
STEP 3: Check passenger air bag (inflator) module initiator circuit in air bag harness for DTC B1018 and B1019 only.

DIAGNOSTIC FLOW TABLE

DTC B1015: PASSENGER AIR BAG INITIATOR CIRCUIT RESISTANCE HIGH

Step	Action	Yes	No
1	1) With ignition switch OFF, disconnect passenger air bag (inflator) module connector “G62” behind the glove box. 2) Check proper connection to passenger air bag (inflator) module at terminals in “G62” connector. 3) If OK then connect special tools (B) and (C) to passenger air bag (inflator) module connector “G62”. With ignition switch ON, does DTC B1015 still exist?	Go to step 2.	Ignition switch OFF. Replace passenger air bag (inflator) module referring to “Passenger Air Bag (Inflator) Module” in this section.
2	1) With ignition switch OFF, disconnect SDM connector “G102”. 2) Check proper connection to SDM at terminals “G102-7” and “G102-8”. 3) If OK, release shorting bar in SDM connector inserting release tool (1) included in special tool (A). 4) Measure resistance between “G102-7” and “G102-8” terminals with special tools (B) and (C) connected to “G62” connector. Is resistance 4.5 Ω or less?	Substitute a known-good SDM and recheck.	Repair high resistance or open in “YEL/RED” or “YEL” wire circuit.

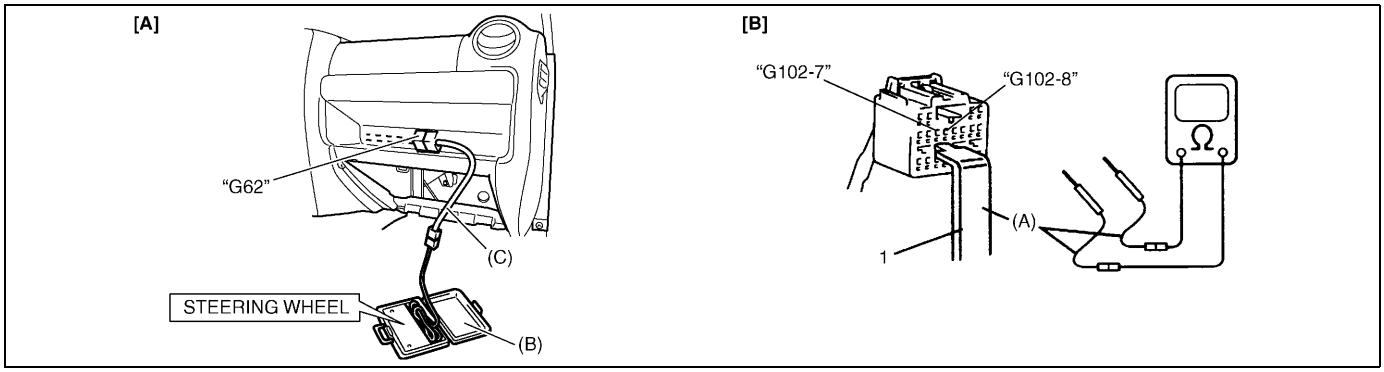

[A]: Fig. for STEP 1 and 2
[B]: Fig. for STEP 2

Special tool
(A): 09932-76010
(B): 09932-75010
(C): 09932-78340

NOTE:

Upon completion of inspection and repair work, perform the following items.

- **Reconnect all air bag system components, ensure all components are properly mounted.**
- **Clear diagnostic trouble codes referring to “DTC Clearance” in this section, if any.**
- **Repeat “Air Bag Diagnostic System Check” in this section to confirm that the trouble has been corrected.**

DTC B1016: PASSENGER AIR BAG INITIATOR CIRCUIT RESISTANCE LOW

Step	Action	Yes	No
1	1) With ignition switch OFF, disconnect passenger air bag (inflator) module connector “G62” behind the glove box. 2) Check proper connection to passenger air bag (inflator) module at terminals in “G62” connector. 3) If OK then connect special tools (B) and (C) to passenger air bag (inflator) module connector “G62”. With ignition switch ON, does DTC B1016 still exist?	Go to step 2.	Ignition switch OFF. Replace passenger air bag (inflator) module referring to “Passenger Air Bag (Inflator) Module” in this section.
2	1) With ignition switch OFF, disconnect SDM connector “G102”. 2) Check proper connection to SDM at terminals “G102-7” and “G102-8”. 3) If OK, release shorting bar in SDM connector inserting release tool (1) included in special tool (A). 4) Measure resistance between “G102-7” and “G102-8” terminals with special tools (B) and (C) connected to “G62” connector. Is resistance 1.4 Ω or more?	Substitute a known-good SDM and recheck.	Repair short from “YEL/RED” wire circuit to “YEL” wire circuit or from “YEL/RED” or “YEL” wire circuit to other wire circuit.

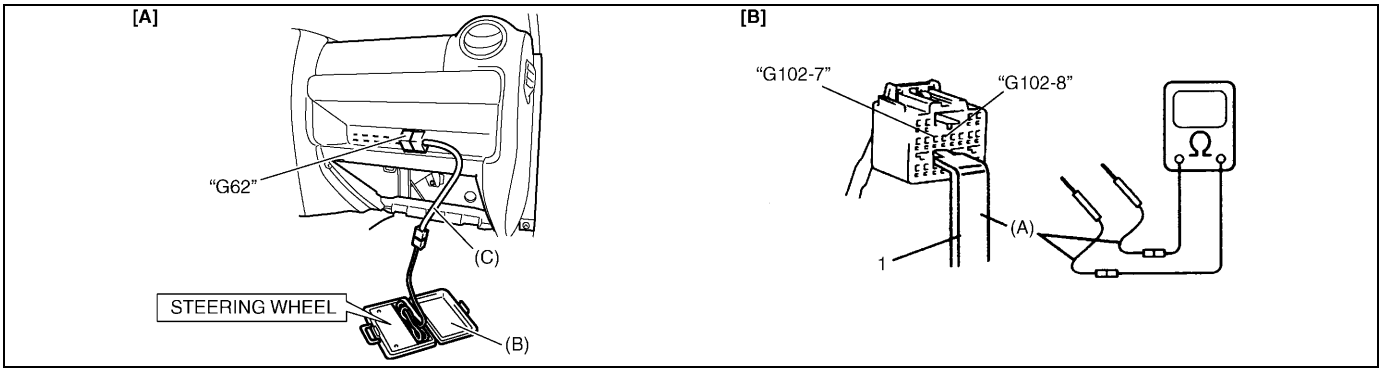

[A]: Fig. for STEP 1 and 2
[B]: Fig. for STEP 2

Special tool
(A): 09932-76010
(B): 09932-75010
(C): 09932-78340

NOTE:

Upon completion of inspection and repair work, perform the following items.

- **Reconnect all air bag system components, ensure all components are properly mounted.**
- **Clear diagnostic trouble codes referring to “DTC Clearance” in this section, if any.**
- **Repeat “Air Bag Diagnostic System Check” in this section to confirm that the trouble has been corrected.**

DTC B1018: PASSENGER AIR BAG INITIATOR CIRCUIT SHORT TO GROUND

Step	Action	Yes	No
1	1) With ignition switch OFF, disconnect passenger air bag (inflator) module connector “G62” behind the glove box. 2) Check proper connection to passenger air bag (inflator) module at terminals in “G62” connector. 3) If OK then connect special tools (B) and (C) to passenger air bag (inflator) module connector “G62”. With ignition switch ON, does DTC B1018 still exist?	Go to step 2.	Ignition switch OFF. Replace passenger air bag (inflator) module referring to “Passenger Air Bag (Inflator) Module” in this section.
2	1) With ignition switch OFF, disconnect special tools (B) and (C) from “G62” connector and SDM connector “G102” from SDM respectively. 2) Release shorting bar in SDM connector inserting release tool (1) included in special tool (A). 3) Measure resistance between “G102-7” terminals and body ground. Is resistance 1 MΩ or more?	Go to step 3.	Repair short from “YEL/RED” wire circuit to ground.
3	1) Measure resistance between “G102-8” terminal and body ground. Is resistance 1 MΩ or more?	Substitute a known-good SDM and recheck.	Repair short from “YEL” wire circuit to ground.

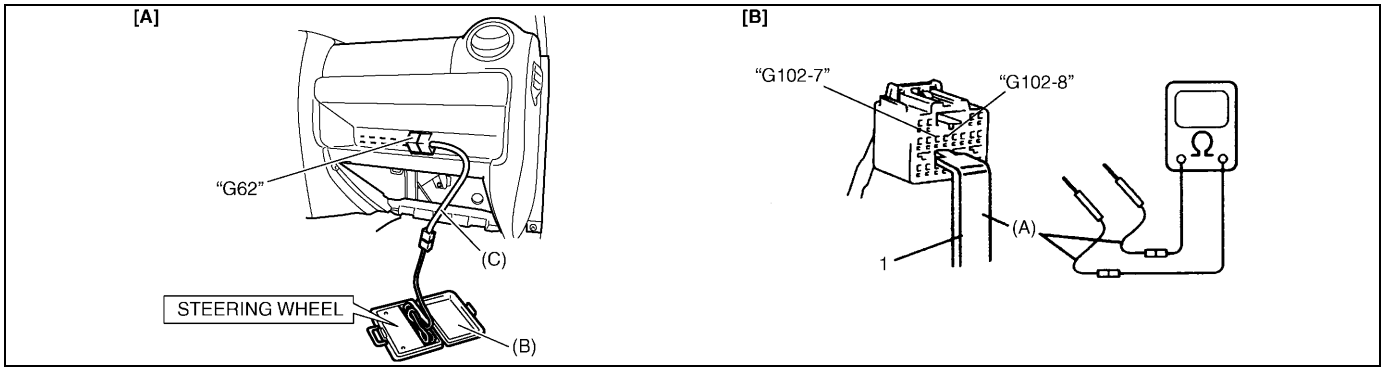

[A]: Fig. for STEP 1, 2 and 3
[B]: Fig. for STEP 2 and 3

Special tool
(A): 09932-76010
(B): 09932-75010
(C): 09932-78340

NOTE:

Upon completion of inspection and repair work, perform the following items.

- **Reconnect all air bag system components, ensure all components are properly mounted.**
- **Clear diagnostic trouble codes referring to “DTC Clearance” in this section, if any.**
- **Repeat “Air Bag Diagnostic System Check” in this section to confirm that the trouble has been corrected.**

DTC B1019: PASSENGER AIR BAG INITIATOR CIRCUIT SHORT TO POWER CIRCUIT

Step	Action	Yes	No
1	1) With ignition switch OFF, disconnect passenger air bag (inflator) module connector “G62” behind the glove box. 2) Check proper connection to passenger air bag (inflator) module at terminals in “G62” connector. 3) If OK then connect special tools (B) and (C) to passenger air bag (inflator) module connector “G62”. With ignition switch ON, does DTC B1019 still exist?	Go to step 2.	Ignition switch OFF. Replace passenger air bag (inflator) module referring to “Passenger Air Bag (Inflator) Module” in this section.
2	1) With ignition switch OFF, disconnect special tools (B) and (C) from “G62” connector and SDM connector “G102” from SDM respectively. 2) Release shorting bar in SDM connector inserting release tool (1) included in special tool (A). 3) Measure voltage from “G102-7” terminal to body ground. With ignition switch ON, is voltage 1 V or less?	Go to step 3.	Repair short from “YEL/RED” wire circuit to power circuit.
3	1) Measure voltage from “G102-8” terminal to body ground. With ignition switch ON, is voltage 1 V or less?	Substitute a known-good SDM and recheck.	Repair short from “YEL” wire circuit to power circuit.

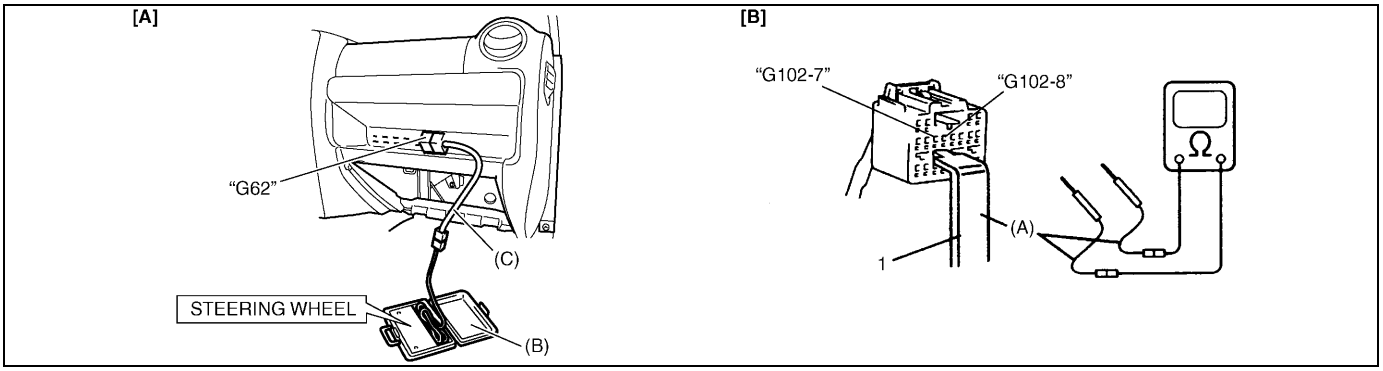

[A]: Fig. for STEP 1, 2 and 3
[B]: Fig. for STEP 2 and 3

Special tool
(A): 09932-76010
(B): 09932-75010
(C): 09932-78340

NOTE:

Upon completion of inspection and repair work, perform the following items.

- **Reconnect all air bag system components, ensure all components are properly mounted.**
- **Clear diagnostic trouble codes referring to “DTC Clearance” in this section, if any.**
- **Repeat “Air Bag Diagnostic System Check” in this section to confirm that the trouble has been corrected.**

DTC B1021 – Driver Air Bag Initiator Circuit Resistance High
DTC B1022 – Driver Air Bag Initiator Circuit Resistance Low
DTC B1024 – Driver Air Bag Initiator Circuit Short to Ground
DTC B1025 – Driver Air Bag Initiator Circuit Short to Power Circuit

WIRING DIAGRAM

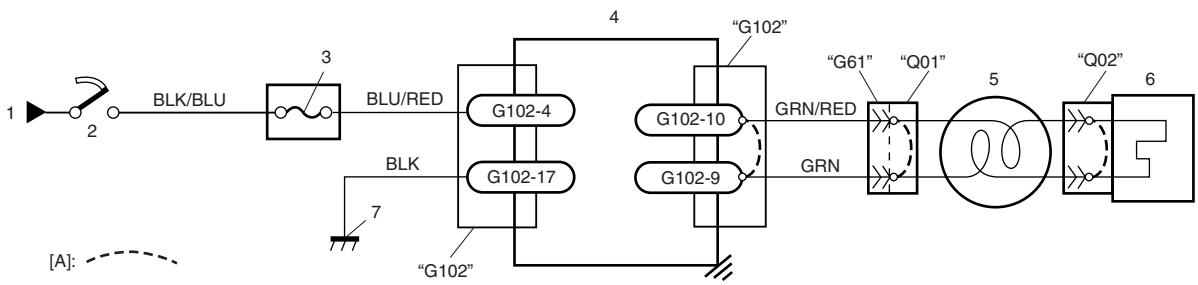

1. From main fuse	4. SDM	7. Ground for air bag system
2. Ignition switch	5. Contact coil assembly	[A]: Shorting bar
3. "AIR BAG" fuse	6. Driver air bag (inflator) module	

CAUTION:

- **Be sure to perform "Air Bag Diagnostic System Check" in this section before starting diagnosis according to flow table.**
- **When measurement of resistance or voltage is required in this table, use a specified digital multimeter described in "Special Tool" in this section along with a correct terminal adapter from special tool (Connector test adapter kit).**
- **When a check for proper connection is required, refer to "Intermittent and Poor Connections" in this section.**
- **If there is open circuit in the air bag wire harness, connector or terminal is found damaged, replace the wire harness, connector and terminal as an assembly.**

DTC WILL SET WHEN

DTC B1021:

The combined resistance of the driver air bag (inflator) module, contact coil assembly, harness wiring and connector terminal contact is above a specified value for specified time.

DTC B1022:

The combined resistance of the driver air bag (inflator) module, contact coil assembly, harness wiring and connector terminal contact is below a specified value for specified time.

DTC B1024:

The voltage measured at driver air bag initiator circuit is below a specified value for specified time.

DTC B1025:

The voltage measured at driver air bag initiator circuit is above a specified value for specified time.

TABLE TEST DESCRIPTION

DTC B1021, B1022, B1024 and B1025:

STEP 1: Check whether malfunction is in contact coil and driver air bag (inflator) module or the others.
STEP 2: Check driver air bag (inflator) module initiator circuit.
STEP 3: Check whether malfunction is in contact coil or driver air bag (inflator) module.

DIAGNOSTIC FLOW TABLE

DTC B1021: DRIVER AIR BAG INITIATOR CIRCUIT RESISTANCE HIGH

Step	Action	Yes	No
1	1) With ignition switch OFF, disconnect contact coil connector “G61” located near the base of the steering column. 2) Check proper connection to contact coil at terminals in connect coil connector “G61”. 3) If OK then connect special tools (B) and (C) to contact coil connector “G61”. With ignition switch ON, does DTC B1021 still exist?	Go to step 2.	Go to step 3.
2	1) With ignition switch OFF, disconnect SDM connector “G102”. 2) Check proper connection to SDM at terminals “G102-9” and “G102-10”. 3) If OK, release shorting bar in SDM connector inserting release tool (1) included in special tool (A). 4) Measure resistance between “G102-9” and “G102-10” terminals with connected special tools (B) and (C) to “G61” connector. Is resistance 4.5 Ω or less?	Substitute a known-good SDM and recheck.	Repair high resistance or open in “GRN” or “GRN/RED” wire circuit.
3	1) With ignition switch OFF, disconnect special tools (B) and (C) from “G61” connector then reconnect contact coil connector “G61” located near the base of the steering column as it was. 2) Remove driver air bag (inflator) module from steering wheel referring to “Driver Air Bag (Inflator) Module” in Section 3C. 3) Check proper connection to driver air bag (inflator) module at terminals in “Q02” connector. 4) If OK then connect special tools (A), (B) and (D) to “Q02” connector. With ignition switch ON, does DTC B1021 still exist?	Ignition switch OFF. Replace contact coil assembly referring to “Combination Switch / Contact Coil and Combination Switch Assembly” in Section 3C.	Ignition switch OFF. Replace driver air bag (inflator) module referring to “Steering Wheel and Driver Air Bag (Inflator) Module” in Section 3C.

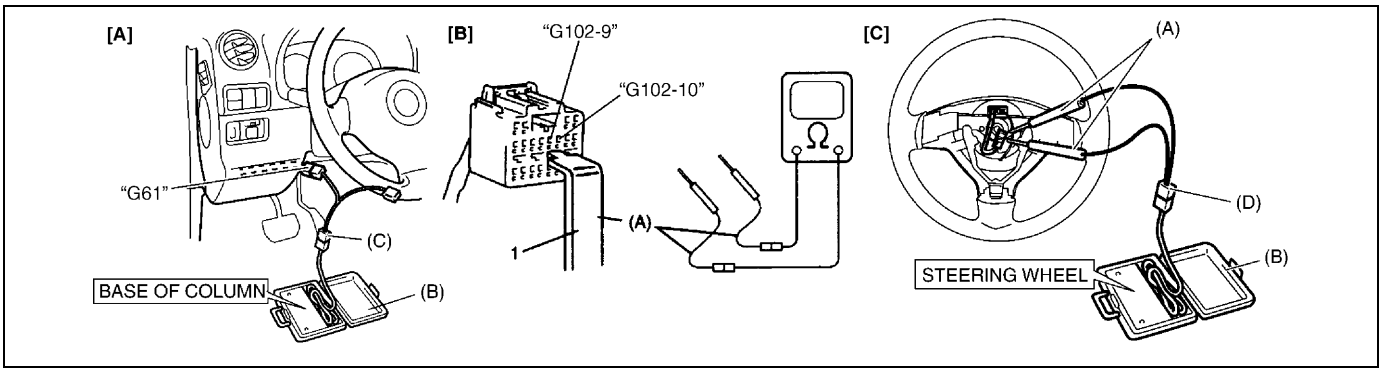

[A]: Fig. for STEP 1 and 2
[B]: Fig. for STEP 2
[C]: Fig. for STEP 3

Special tool
(A): 09932-76010
(B): 09932-75010
(C): 09932-78340
(D): 09932-78310

NOTE:

Upon completion of inspection and repair work, perform the following items.
- **Reconnect all air bag system components, ensure all components are properly mounted.**
- **Clear diagnostic trouble codes referring to "DTC Clearance" in this section, if any.**
- **Repeat "Air Bag Diagnostic System Check" in this section to confirm that the trouble has been corrected.**

DTC B1022: DRIVER AIR BAG INITIATOR CIRCUIT RESISTANCE LOW

Step	Action	Yes	No
1	1) With ignition switch OFF, disconnect contact coil connector "G61" located near the base of the steering column. 2) Check proper connection to contact coil at terminals in "G61" connector. 3) If OK then connect special tools (B) and (C) to contact coil connector "G61". With ignition switch ON, does DTC B1022 still exist?	Go to step 2.	Go to step 3.
2	1) With ignition switch OFF, disconnect SDM connector "G102". 2) Check proper connection to SDM at terminals "G102-9" and "G102-10". 3) If OK, release shorting bar in SDM connector inserting release tool (1) included in special tool (A). 4) Measure resistance between "G102-9" and "G102-10" terminals with connected special tools (B) and (C) to "G61" connector. Is resistance 1.7 Ω or more?	Substitute a known-good SDM and recheck.	Repair short from "GRN" wire circuit to "GRN/RED" wire circuit or from "GRN" or "GRN/RED" wire circuit to other wire circuit.
3	1) With ignition switch OFF, disconnect special tools (B) and (C) from "G61" connector then reconnect contact coil connector "G61" located near the base of the steering column as it was. 2) Remove driver air bag (inflator) module from steering wheel referring to "Driver Air Bag (Inflator) Module" in Section 3C. 3) Check proper connection to driver air bag (inflator) module at terminals in "Q02" connector. 4) If OK then connect special tools (B) and (C) to "Q02" connector. With ignition switch ON, does DTC B1022 still exist?	Ignition switch OFF. Replace contact coil assembly referring to "Combination Switch / Contact Coil and Combination Switch Assembly" in Section 3C.	Ignition switch OFF. Replace driver air bag (inflator) module referring to "Driver Air Bag (Inflator) Module" in Section 3C.

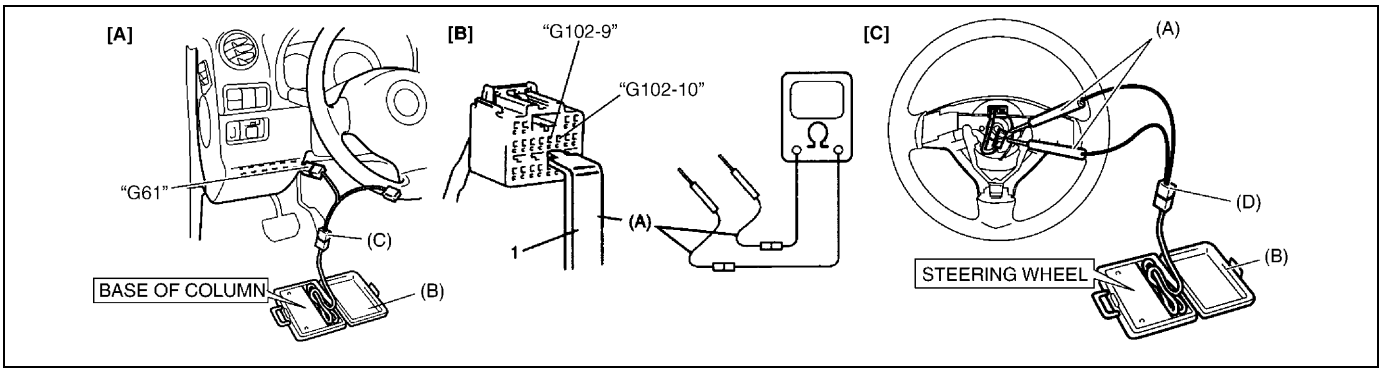

[A]: Fig. for STEP 1 and 2
[B]: Fig. for STEP 2
[C]: Fig. for STEP 3

Special tool
(A): 09932-76010
(B): 09932-75010
(C): 09932-78340
(D): 09932-78310

NOTE:

Upon completion of inspection and repair work, perform the following items.

- **Reconnect all air bag system components, ensure all components are properly mounted.**
- **Clear diagnostic trouble codes referring to "DTC Clearance" in this section, if any.**
- **Repeat "Air Bag Diagnostic System Check" in this section to confirm that the trouble has been corrected.**

DTC B1024: DRIVER AIR BAG INITIATOR CIRCUIT SHORT TO GROUND

Step	Action	Yes	No
1	1) With ignition switch OFF, disconnect contact coil connector “G61” located near the base of the steering column. 2) Check proper connection to contact coil at terminals in “G61” connector. 3) If OK then connect special tools (B) and (C) to contact coil connector “G61”. With ignition switch ON, does DTC B1024 still exist?	Go to step 2.	Go to step 3.
2	1) With ignition switch OFF, disconnect special tools (B) and (C) from “G61” connector and SDM connector “G61” from SDM respectively. 2) Release shorting bar in SDM connector inserting release tool (1) included in special tool (A). 3) Measure resistance between “G102-9” terminal and body ground and between “G102-10” terminal and body ground. Are they 1 MΩ or more?	Substitute a known-good SDM and recheck.	Repair short from “GRN” or “GRN/RED” wire circuit to ground.
3	1) With ignition switch OFF, disconnect special tools (B) and (C) from “G61” connector then reconnect contact coil connector “G61” located near the base of the steering column as it was. 2) Remove driver air bag (inflator) module from steering wheel referring to “Driver Air Bag (Inflator) Module” in Section 3C. 3) Check proper connection to driver air bag (inflator) module at terminals in “Q02” connector. 4) If OK then connect special tools (B) and (C) to “Q02” connector. With ignition switch ON, does DTC B1024 still exist?	Ignition switch OFF. Replace contact coil assembly referring to “Combination Switch / Contact Coil and Combination Switch Assembly” in Section 3C.	Ignition switch OFF. Replace driver air bag (inflator) module referring to “Driver Air Bag (Inflator) Module” in Section 3C.

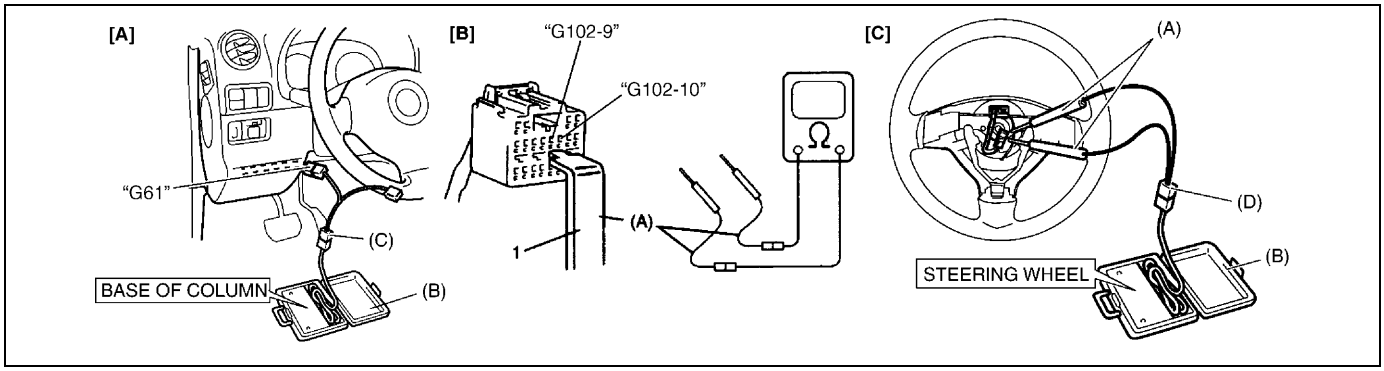

[A]: Fig. for STEP 1 and 2
[B]: Fig. for STEP 2
[C]: Fig. for STEP 3

Special tool
(A): 09932-76010
(B): 09932-75010
(C): 09932-78340
(D): 09932-78310

NOTE:

Upon completion of inspection and repair work, perform the following items.

- **Reconnect all air bag system components, ensure all components are properly mounted.**
- **Clear diagnostic trouble codes referring to "DTC Clearance" in this section, if any.**
- **Repeat "Air Bag Diagnostic System Check" in this section to confirm that the trouble has been corrected.**

DTC B1025: DRIVER AIR BAG INITIATOR CIRCUIT SHORT TO POWER CIRCUIT

Step	Action	Yes	No
1	1) With ignition switch OFF, disconnect contact coil connector "G61" located near the base of the steering column. 2) Check proper connection to contact coil at terminals in contact coil connector "G61". 3) If OK then connect special tools (B) and (C) to contact coil connector "G61". With ignition switch ON, does DTC B1025 still exist?	Go to step 2.	Go to step 3.
2	1) With ignition switch OFF, disconnect special tools (B) and (C) from "G61" connector and SDM connector "G102" from SDM respectively. 2) Release shorting bar in SDM connector inserting release tool (1) included in special tool (A). 3) Measure voltage from "G102-9" terminal to body ground and from "G102-10" terminal to body ground. With ignition switch ON, are they 1 V or less?	Substitute a known-good SDM and recheck.	Repair short from "GRN" or "GRN/RED" wire circuit to power circuit.
3	1) With ignition switch OFF, disconnect special tools (B) and (C) from "G61" connector then reconnect contact coil connector "G61" located near the base of the steering column as it was. 2) Remove driver air bag (inflator) module from steering wheel referring to "Driver Air Bag (Inflator) Module" in Section 3C. 3) Check proper connection to driver air bag (inflator) module at terminals in "Q02" connector. 4) If OK then connect special tools (B) and (C) to "Q02" connector. With ignition switch ON, does DTC B1025 still exist?	Ignition switch OFF. Replace contact coil assembly referring to "Combination Switch / Contact Coil and Combination Switch Assembly" in Section 3C.	Ignition switch OFF. Replace driver air bag (inflator) module referring to "Driver Air Bag (Inflator) Module" in Section 3C.

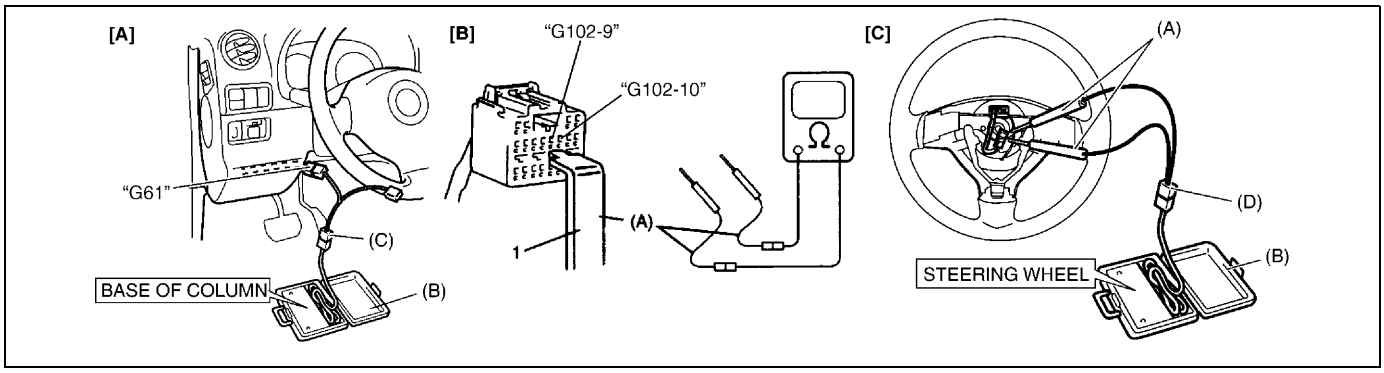

[A]: Fig. for STEP 1 and 2
[B]: Fig. for STEP 2
[C]: Fig. for STEP 3

Special tool
(A): 09932-76010
(B): 09932-75010
(C): 09932-78340
(D): 09932-78310

NOTE:

Upon completion of inspection and repair work, perform the following items.

- **Reconnect all air bag system components, ensure all components are properly mounted.**
- **Clear diagnostic trouble codes referring to "DTC Clearance" in this section, if any.**
- **Repeat "Air Bag Diagnostic System Check" in this section to confirm that the trouble has been corrected.**

DTC B1032 – Power Source Voltage Low

WIRING DIAGRAM

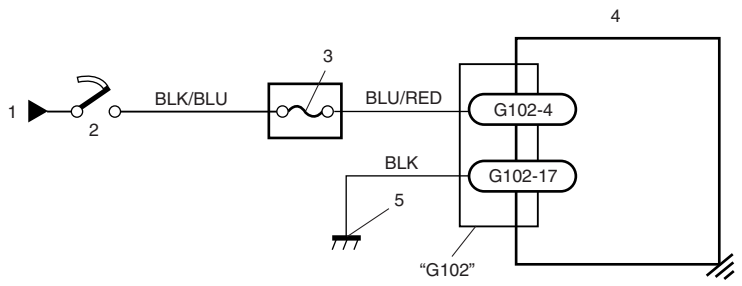

1. From main fuse	3. "AIR BAG" fuse	5. Ground for air bag system
2. Ignition switch	4. SDM	

CAUTION:

- **Be sure to perform "Air Bag Diagnostic System Check" in this section before starting diagnosis according to flow table.**
- **When measurement of resistance or voltage is required in this table, use a specified digital multimeter described in "Special Tool" in this section along with a correct terminal adapter from special tool (Connector test adapter kit).**
- **When a check for proper connection is required, refer to "Intermittent and Poor Connections" in this section.**
- **If there is open circuit in the air bag wire harness, connector or terminal is found damaged, replace the wire harness, connector and terminal as an assembly.**

DTC WILL SET WHEN:

The power source voltage is below specified value for specified time.

TABLE TEST DESCRIPTION:

STEP 1: Check if voltage on battery is within normal range.
STEP 2: Check "AIR BAG" fuse.
STEP 3: Check if battery applied to SDM is within normal range.
STEP 4: Check if DTC B1032 still exists.

DIAGNOSTIC FLOW TABLE

DTC B1032: POWER SOURCE VOLTAGE LOW

Step	Action	Yes	No
1	1) Measure voltage on battery. Is voltage 11 V or more?	Go to step 2.	Check Charging System and repair as necessary referring to "Diagnosis" in Section 6H.
2	1) Ignition switch OFF. 2) Remove and inspect "AIR BAG" fuse. Is fuse good?	Go to step 3.	"BLU/RED" wire short to ground. After repair, replace "AIR BAG" fuse.

Step	Action	Yes	No
3	1) With ignition switch OFF, disconnect SDM connector “G102”. 2) Check proper connection to SDM at “G102-4” terminal. 3) If OK then ignition switch ON, and then check voltage from “G102-4” terminal on SDM connector to body ground. Is voltage 8 V or more?	Go to step 4.	Possibly faulty points are as follows. Check each of them and repair as necessary. • Circuit from battery to “G102” connector. • Charging System (Refer to “Diagnosis” in Section 6H.)
4	1) With ignition switch OFF, reconnect SDM connector. With ignition switch ON, does DTC B1032 still exist?	Substitute a known-good SDM and recheck.	Check Charging System and repair as necessary referring to “Diagnosis” in Section 6H.

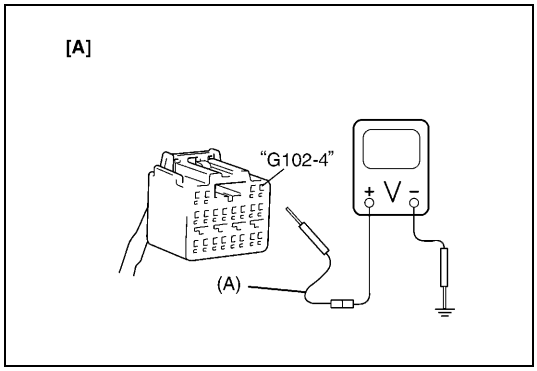

[A]: Fig. for STEP 3

Special tool
(A): 09932-76010

NOTE:

Upon completion of inspection and repair work, perform the following items.

- **Reconnect all air bag system components, ensure all components are properly mounted.**
- **Clear diagnostic trouble codes referring to “DTC Clearance” in this section, if any.**
- **Repeat “Air Bag Diagnostic System Check” in this section to confirm that the trouble has been corrected.**

DTC B1035 – Forward Sensor Circuit Open or Short to Power Circuit (K9K engine model)

DTC B1036 – Forward Sensor Circuit Short Between Two Wires or Short to Ground (K9K engine model)

WIRING DIAGRAM

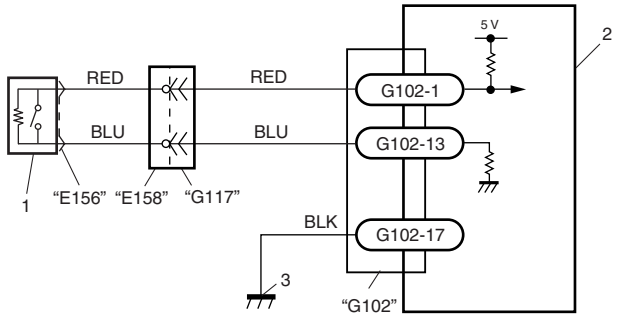

1. Forward sensor	3. Ground for air bag system
2. SDM	

CAUTION:

- **Be sure to perform "Air Bag Diagnostic System Check" in this section before starting diagnosis according to flow table.**
- **When measurement of resistance or voltage is required in this table, use a specified digital multimeter described in "Special Tool" in this section along with a correct terminal adapter from special tool (Connector test adapter kit).**
- **When a check for proper connection is required, refer to "Intermittent and Poor Connections" in this section.**
- **If there is open circuit in the air bag wire harness, connector or terminal is found damaged, replace the wire harness, connector and terminal as an assembly.**

DTC WILL SET WHEN

DTC B1035:

The voltage measured at forward sensor circuit (terminal G102-1) is above a specified value for specified time.

DTC B1036:

The voltage measured at forward sensor circuit (terminal G102-1) is below a specified value for specified time.

TABLE TEST DESCRIPTION

DTC B1035:

STEP 1: Check whether malfunction is in forward sensor.
STEP 2: Check if forward sensor circuit is open.
STEP 3: Check if forward sensor circuit is shorted to power circuit.

DTC B1036:

STEP 1: Check whether malfunction is in forward sensor.
STEP 2: Check if forward sensor circuit is shorted between two wires.
STEP 3: Check if forward sensor circuit is shorted to ground.

DIAGNOSTIC FLOW TABLE

DTC B1035: FORWARD SENSOR CIRCUIT OPEN OR SHORT TO POWER CIRCUIT

Step	Action	Yes	No
1	1) Ignition switch OFF. 2) Disconnect driver air bag (inflator) module connector, passenger air bag (inflator) module connector, driver pretensioner module connector, and passenger pretensioner module connector. 3) Disconnect forward sensor connector. 4) Check proper connection to forward sensor connector at "RED" and "BLU" terminals. 5) If OK then measure resistance between terminals of forward sensor. Is resistance 738 – 902 Ω?	Go to step 2.	Replace forward sensor.
2	1) Reconnect forward sensor connector. 2) Disconnect SDM connector "G102". 3) Check proper connection to SDM connector at terminals "G102-1" and "G102-13". 4) If OK then measure resistance between terminals "G102-1" and "G102-13". Is resistance 738 – 902 Ω?	Go to step 3.	Repair high resistance or open in "RED" and "BLU" wire circuit (between forward sensor and SDM).
3	1) Disconnect forward sensor connector. 2) Measure voltage from "G102-1" terminal to body ground and "G102-13" terminal to body ground. With ignition switch ON, are they 1V or less?	Substitute a known-good SDM and recheck.	Repair short from "RED" or "BLU" wire circuit (between forward sensor and SDM) to power circuit.

[A] Fig. for STEP 1 / [B] Fig. for STEP 2 / [C] Fig. for STEP 3

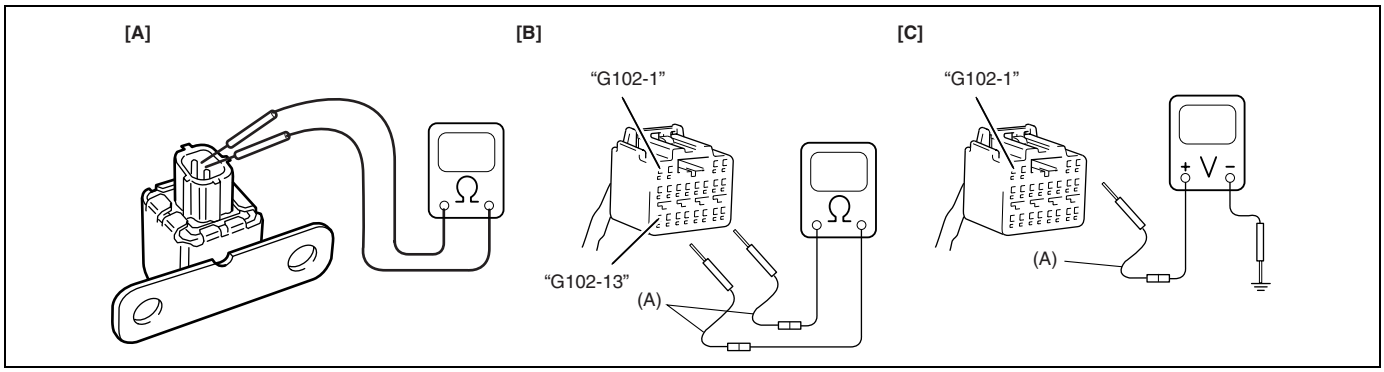

Special tool
(A): 09932-76010

NOTE:

Upon completion of inspection and repair work, perform the following items.

- **Reconnect all air bag system components, ensure all components are properly mounted.**
- **Clear diagnostic trouble codes referring to "DTC Clearance" in this section, if any.**
- **Repeat "Air Bag Diagnostic System Check" in this section to confirm that the trouble has been corrected.**

DTC B1036: FORWARD SENSOR CIRCUIT SHORT BETWEEN TWO WIRES OR SHORT TO GROUND

Step	Action	Yes	No
1	1) Ignition switch OFF. 2) Disconnect driver air bag (inflator) module connector, passenger air bag (inflator) module connector, driver pretensioner module connector, and passenger pretensioner module connector. 3) Disconnect forward sensor connector. 4) Check proper connection to forward sensor connector at “RED” and “BLU” terminals. 5) If OK then measure resistance between terminals of forward sensor. Is resistance 738 – 902 Ω?	Go to step 2.	Replace forward sensor.
2	1) Disconnect SDM connector “G102”. 2) Check proper connection to SDM connector at terminals “G102-1” and “G102-13”. 3) If OK then measure resistance between terminals “G102-1” and “G102-13”. Is resistance infinity?	Go to step 3.	Repair short from “RED” wire circuit (between forward sensor and SDM) to “BLU” wire circuit (between forward sensor and SDM).
3	1) Measure resistance between “G102-1” terminal and body ground, “G102-13” terminal and body ground. Are resistances infinity?	Substitute a known-good SDM and recheck.	Repair short from “RED” or “BLU” wire circuit (between forward sensor and SDM) to ground.

[A] Fig. for STEP 1 / [B] Fig. for STEP 2 / [C] Fig. for STEP 3

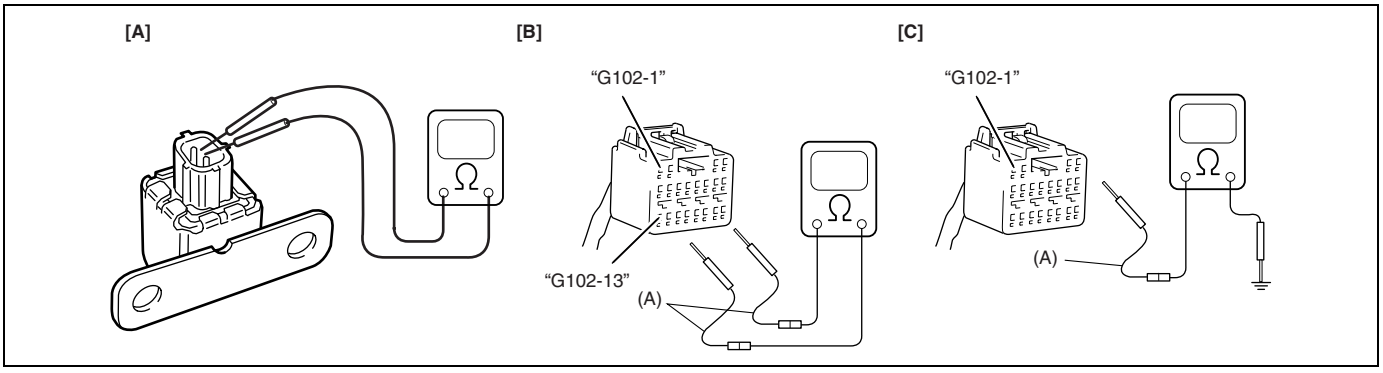

Special tool
(A): 09932-76010

NOTE:

Upon completion of inspection and repair work, perform the following items.

- **Reconnect all air bag system components, ensure all components are properly mounted.**
- **Clear diagnostic trouble codes referring to “DTC Clearance” in this section, if any.**
- **Repeat “Air Bag Diagnostic System Check” in this section to confirm that the trouble has been corrected.**

DTC B1041 – Driver Pretensioner Initiator Circuit Resistance High (LH Steering Vehicle) Passenger Pretensioner Initiator Circuit Resistance High (RH Steering Vehicle)

DTC B1042 – Driver Pretensioner Initiator Circuit Resistance Low (LH Steering Vehicle) Passenger Pretensioner Initiator Circuit Resistance Low (RH Steering Vehicle)

DTC B1043 – Driver Pretensioner Initiator Circuit Short to Ground (LH Steering Vehicle) Passenger Pretensioner Initiator Circuit Short to Ground (RH Steering Vehicle)

DTC B1044 – Driver Pretensioner Initiator Circuit Short to Power Circuit (LH Steering Vehicle) Passenger Pretensioner Initiator Circuit Short to Power Circuit (RH Steering Vehicle)

DTC B1045 – Passenger Pretensioner Initiator Circuit Resistance High (LH Steering Vehicle) Driver Pretensioner Initiator Circuit Resistance High (RH Steering Vehicle)

DTC B1046 – Passenger Pretensioner Initiator Circuit Resistance Low (LH Steering Vehicle) Driver Pretensioner Initiator Circuit Resistance Low (RH Steering Vehicle)

DTC B1047 – Passenger Pretensioner Initiator Circuit Short to Ground (LH Steering Vehicle) Driver Pretensioner Initiator Circuit Short to Ground (RH Steering Vehicle)

DTC B1048 – Passenger Pretensioner Initiator Circuit Short to Power Circuit (LH Steering Vehicle) Driver Pretensioner Initiator Circuit Short to Power Circuit (RH Steering Vehicle)

WIRING DIAGRAM

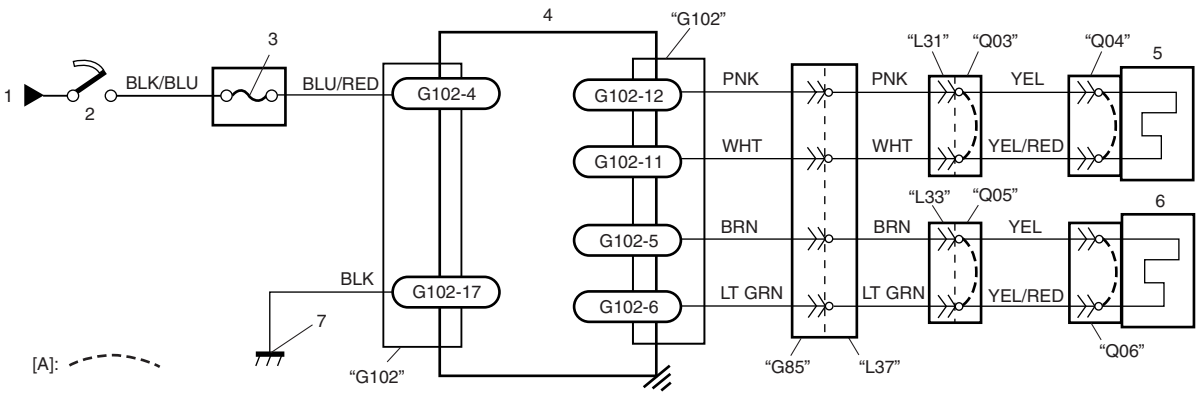

1. From main fuse	4. SDM	7. Ground for air bag system
2. Ignition switch	5. Driver seat belt pretensioner (LH steering vehicle) Passenger seat belt pretensioner (RH steering vehicle)	[A]: Shorting bar
3. "AIR BAG" fuse	6. Passenger seat belt pretensioner (LH steering vehicle) Driver seat belt pretensioner (RH steering vehicle)	

CAUTION:
- **Be sure to perform "Air Bag Diagnostic System Check" in this section before starting diagnosis according to flow table.**
- **When measurement of resistance or voltage is required in this table, use a specified digital multimeter described in "Special Tool" in this section along with a correct terminal adapter from special tool (Connector test adapter kit).**
- **When a check for proper connection is required, refer to "Intermittent and Poor Connections" in this section.**
- **If there is open circuit in the air bag wire harness, connector or terminal is found damaged, replace the wire harness, connector and terminal as an assembly.**

DTC WILL SET WHEN

DTC B1041 and B1045:
The resistance of driver or passenger seat belt pretensioner initiator circuit is above a specified value for specified time.
DTC B1042 and B1046:
The resistance of driver or passenger seat belt pretensioner initiator circuit is below a specified value for specified time.
DTC B1043 and B1047:
The voltage measured at driver or passenger seat belt pretensioner initiator circuit is below a specified value for specified time.
DTC B1044 and B1048:
The voltage measured at driver or passenger seat belt pretensioner initiator circuit is above a specified value for specified time.

TABLE TEST DESCRIPTION

DTC B1041, B1042, B1043, B1044, B1045, B1046, B1047 and B1048:
STEP 1: Check whether malfunction is in seat belt pretensioner.
STEP 2: Check seat belt pretensioner initiator circuit in seat belt pretensioner harness.
STEP 3: Check seat belt pretensioner initiator circuit in air bag harness.

DIAGNOSTIC FLOW TABLE

DTC B1041: Driver Pretensioner Initiator Circuit Resistance High (LH Steering Vehicle)
Passenger Pretensioner Initiator Circuit Resistance High (RH Steering Vehicle)
DTC B1045: Passenger Pretensioner Initiator Circuit Resistance High (LH Steering Vehicle)
Driver Pretensioner Initiator Circuit Resistance High (RH Steering Vehicle)

Step	Action	Yes	No
1	1) With ignition switch OFF, remove quarter lower trim of applicable side. 2) Disconnect connector "Q04" or "Q06" connector from seat belt pretensioner. 3) Check proper connection to applicable seat belt pretensioner at terminals in "Q04" or "Q06" connector. 4) If OK then connect special tools (A), (B) and (C) to "Q04" or "Q06" connector. With ignition switch ON, does DTC B1041 or B1045 still exist?	Go to step 2.	Ignition switch OFF, and replace seat belt pretensioner referring "Front Seat Belt" in Section 10.

Step	Action	Yes	No
2	1) With ignition switch OFF, disconnect special tools (A), (B) and (C) from “Q04” or “Q06” connector. 2) Disconnect connector “L31” or “L33” from air bag wire harness in floor harness. 3) Check proper connection to air bag wire harness at terminals in “L31” or “L33” connector. 4) If OK then connect special tools (B) and (D) to “L31” or “L33” connector. With ignition switch ON, does DTC B1041 or B1045 still exist?	Go to step 3.	Repair high resistance or open in “YEL” or “YEL/RED” wire circuit.
3	1) With ignition switch OFF, disconnect SDM connector “G102”. 2) Check proper connection between “G102-11” and “G102-12” or “G102-6” and “G102-5”. 3) If OK, measure resistance with connected special tools (B) and (D). • DTC B1041: between “G102-12” and “G102-11” terminals • DTC B1045: between “G102-5” and “G102-6” terminals. Is resistance 4.5 Ω or less?	Substitute a known-good SDM and recheck.	DTC B1041: Repair high resistance or open in “PNK” or “WHT” wire circuit. DTC B1045: Repair high resistance or open in “BRN” or “LT GRN” wire circuit.

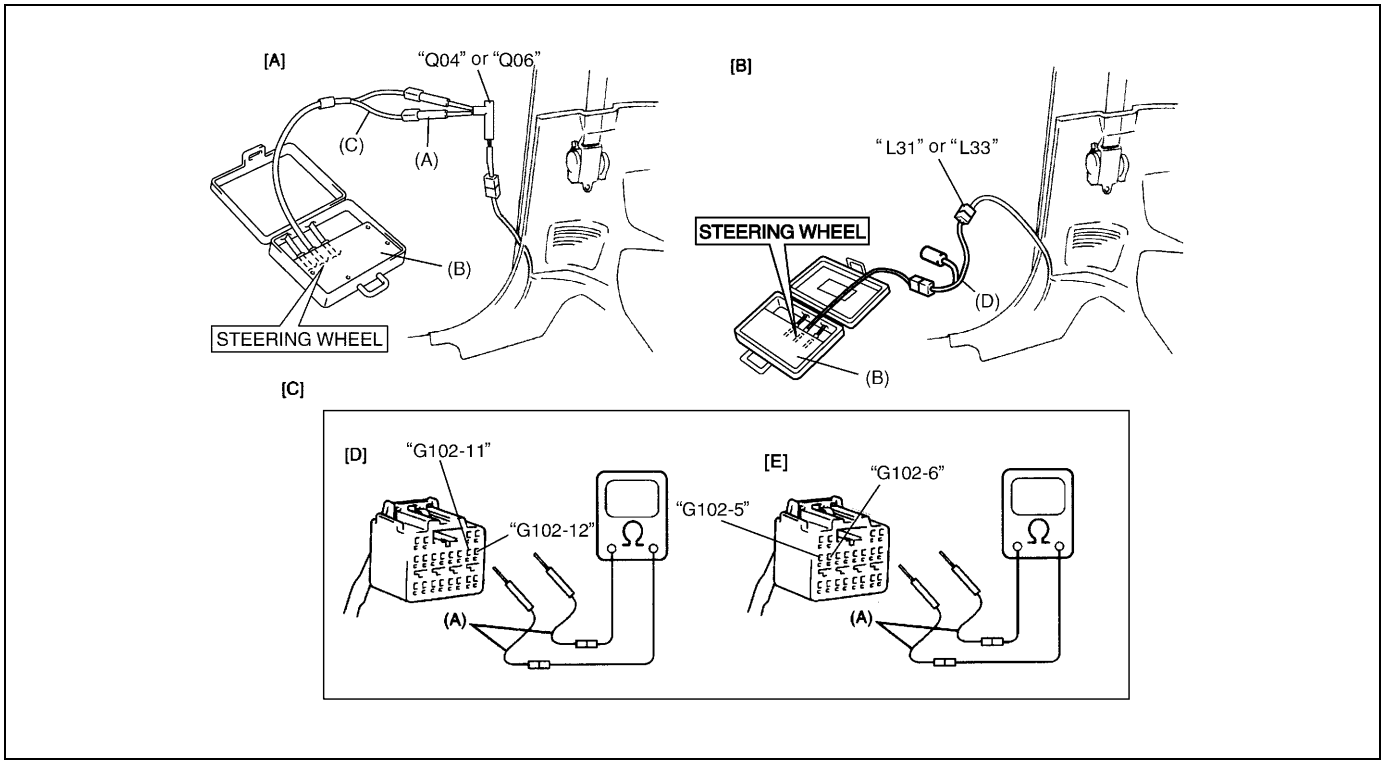

[A]: Fig. for STEP 1	[C]: Fig. for STEP 3	[E]: For DTC B1045
[B]: Fig. for STEP 2 and 3	[D]: For DTC B1041	

Special tool
(A): 09932-76010
(B): 09932-75010
(C): 09932-78310
(D): 09932-78340

NOTE:

Upon completion of inspection and repair work, perform the following items.

- **Reconnect all air bag system components, ensure all components are properly mounted.**
- **Clear diagnostic trouble codes referring to "DTC Clearance" in this section, if any.**
- **Repeat "Air Bag Diagnostic System Check" in this section to confirm that the trouble has been corrected.**

DTC B1042: Driver Pretensioner Initiator Circuit Resistance Low (LH Steering Vehicle)
Passenger Pretensioner Initiator Circuit Resistance Low (RH Steering Vehicle)
DTC B1046: Passenger Pretensioner Initiator Circuit Resistance Low (LH Steering Vehicle)
Driver Pretensioner Initiator Circuit Resistance Low (RH Steering Vehicle)

Step	Action	Yes	No
1	1) With ignition switch OFF, remove quarter lower trim of applicable side. 2) Disconnect connector "Q04" or "Q06" connector from seat belt pretensioner. 3) Check proper connection to applicable seat belt pretensioner at terminals in "Q04" or "Q06" connector. 4) If OK then connect special tools (A), (B) and (C) to "Q04" or "Q06" connector. With ignition switch ON, does DTC B1042 or B1046 still exist?	Go to step 2.	Ignition switch OFF, and replace seat belt pretensioner referring "Front Seat Belt" in Section 10.
2	1) With ignition switch OFF, disconnect special tools (A), (B) and (C) from "Q04" or "Q06" connector. 2) Disconnect connector "L31" or "L33" from air bag wire harness in floor harness. 3) Check proper connection to air bag wire harness at terminals in "L31" or "L33" connector. 4) If OK then connect special tools (B) and (D) to "L31" or "L33" connector. With ignition switch ON, does DTC B1042 or B1046 still exist?	Go to step 3.	Repair short from "YEL" wire circuit to "YEL/RED" wire circuit or from "YEL" or "YEL/RED" wire circuit to other wire circuit.

Step	Action	Yes	No
3	1) With ignition switch OFF, disconnect SDM connector “G102”. 2) Check proper connection between “G102-11” and “G102-12” or “G102-6” and “G102-5”. 3) If OK, measure resistance with connected special tools (B) and (D). • DTC B1042: between “G102-11” and “G102-12” terminals • DTC B1046: between “G102-5” and “G102-6” terminals. Is resistance 1.4 Ω or more?	Substitute a known-good SDM and recheck.	DTC B1042: Repair short from “PNK” wire circuit to “WHT” wire circuit or from “PNK” or “WHT” wire circuit to other wire circuit. DTC B1046: Repair short from “BRN” wire circuit to “LT GRN” wire circuit or from “BRN” or “LT GRN” wire circuit to other wire circuit.

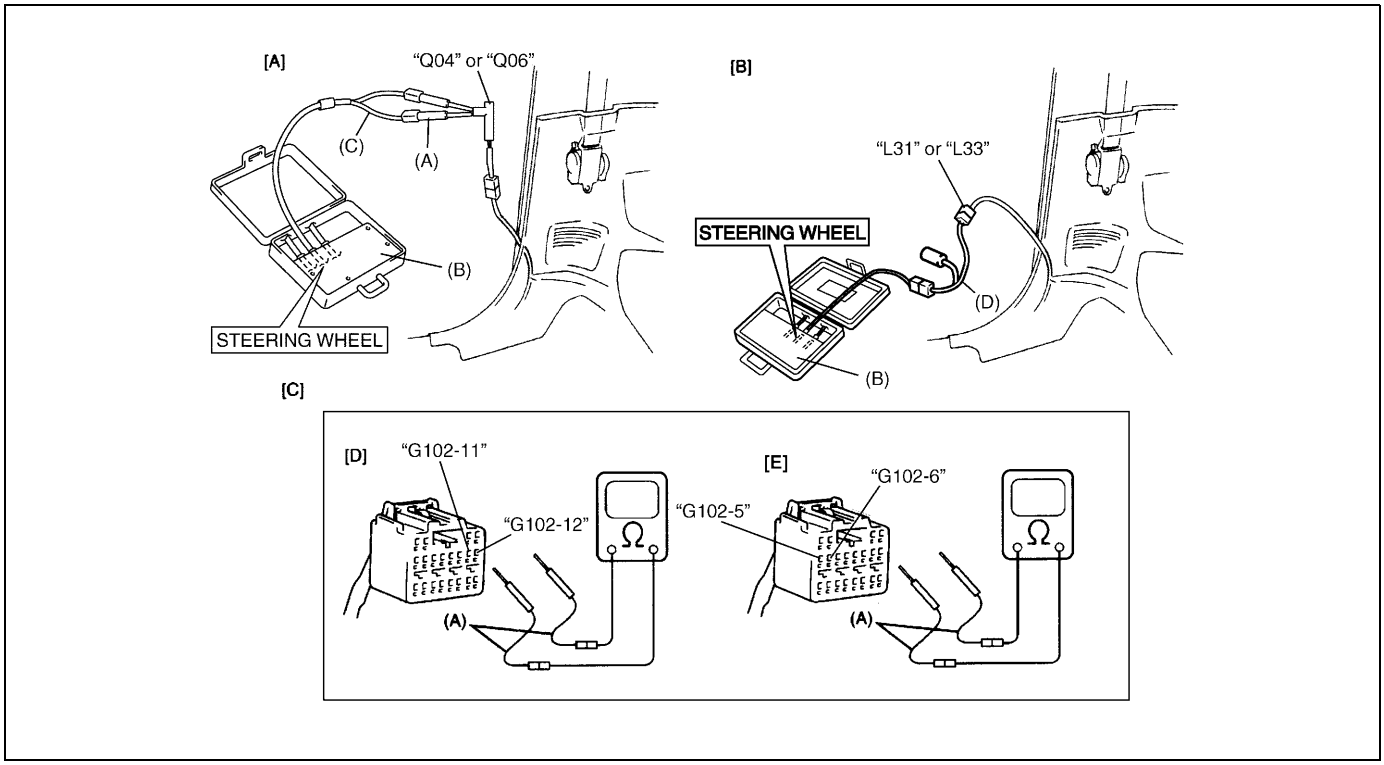

[A]: Fig. for STEP 1	[C]: Fig. for STEP 3	[E]: For DTC B1046
[B]: Fig. for STEP 2 and 3	[D]: For DTC B1042	

Special tool
(A): 09932-76010
(B): 09932-75010
(C): 09932-78310
(D): 09932-78340

NOTE:

Upon completion of inspection and repair work, perform the following items.

- **Reconnect all air bag system components, ensure all components are properly mounted.**
- **Clear diagnostic trouble codes referring to “DTC Clearance” in this section, if any.**
- **Repeat “Air Bag Diagnostic System Check” in this section to confirm that the trouble has been corrected.**

DTC B1043: Driver Pretensioner Initiator Circuit Short to Ground (LH Steering Vehicle)
Passenger Pretensioner Initiator Circuit Short to Ground (RH Steering Vehicle)
DTC B1047: Passenger Pretensioner Initiator Circuit Short to Ground (LH Steering Vehicle)
Driver Pretensioner Initiator Circuit Short to Ground (RH Steering Vehicle)

Step	Action	Yes	No
1	1) With ignition switch OFF, remove quarter lower trim of applicable side. 2) Disconnect connector “Q04” or “Q06” connector from seat belt pretensioner. 3) Check proper connection to applicable seat belt pretensioner at terminals in “Q04” or “Q06” connector. 4) If OK then connect special tools (A), (B) and (C) to “Q04” or “Q06” connector. With ignition switch ON, does DTC B1043 or B1047 still exist?	Go to step 2.	Ignition switch OFF, and replace seat belt pretensioner referring “Front Seat Belt” in Section 10.
2	1) With ignition switch OFF, disconnect special tools (A), (B) and (C) from “Q04” or “Q06” connector. 2) Disconnect connector “L31” or “L33” from air bag wire harness in floor harness. 3) Check proper connection to air bag wire harness at terminals in “L31” or “L33” connector. 4) If OK then connect special tools (B) and (D) to “L31” or “L33” connector. With ignition switch ON, does DTC B1043 or B1047 still exist?	Go to step 3.	Repair short “YEL” or “YEL/RED” wire circuit to ground.
3	1) With ignition switch OFF, disconnect special tools (A) and (D) from seat belt pretensioner wire harness connector “L31” or “L33”. 2) Disconnect SDM connector “G102” from SDM. 3) Measure resistance. • DTC B1043: between “G102-11” terminal and body ground, and between “G102-12” terminal and body ground. • DTC B1047: between “G102-5” terminal and body ground, and between “G102-6” terminal and body ground. Is resistance 1 MΩ or more?	Substitute a known-good SDM and recheck.	DTC B1043: Repair short “WHT” or “PNK” wire circuit to ground. DTC B1047: Repair short from “BRN” or “LT GRN” wire circuit to ground.

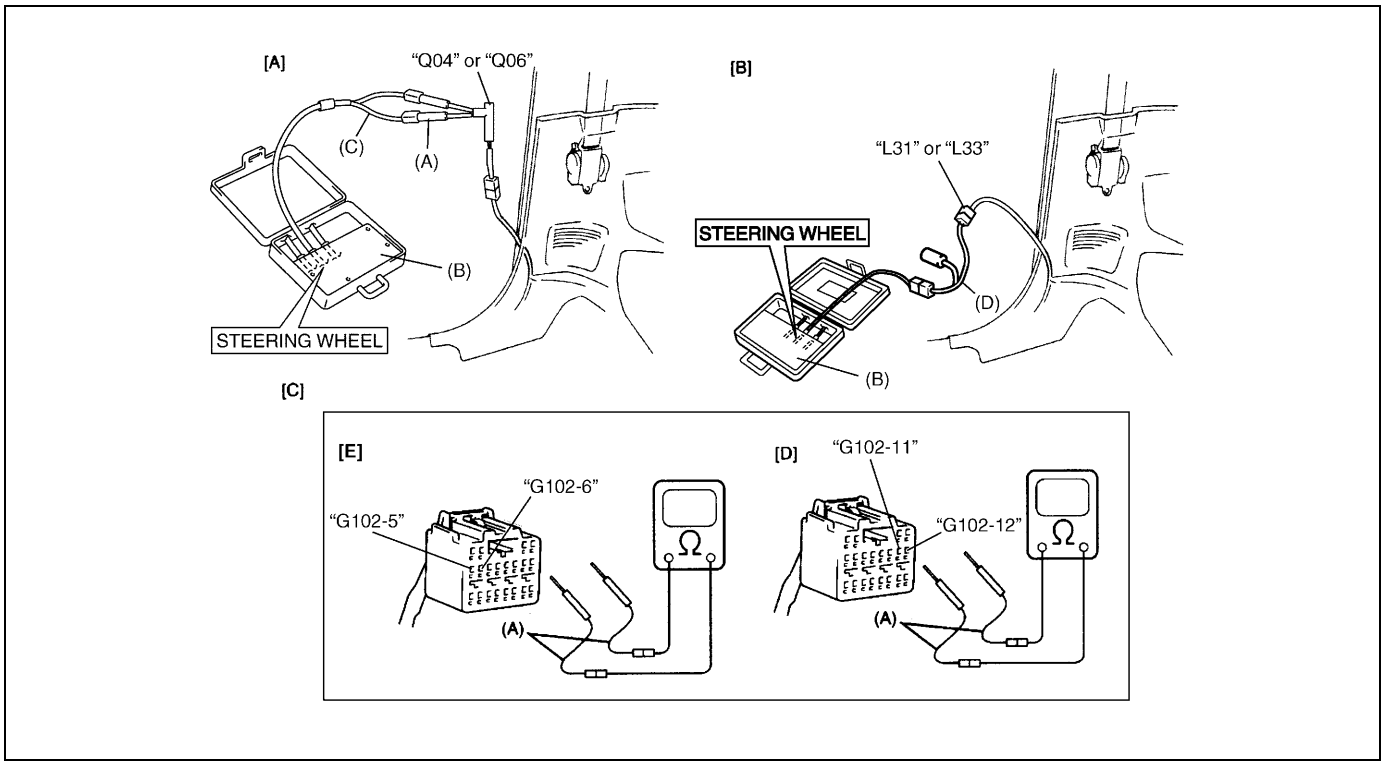

[A]: Fig. for STEP 1	[C]: Fig. for STEP 3	[E]: For DTC B1047
[B]: Fig. for STEP 2 and 3	[D]: For DTC B1043	

Special tool
(A): 09932-76010
(B): 09932-75010
(C): 09932-78310
(D): 09932-78340

NOTE:

Upon completion of inspection and repair work, perform the following items.

- **Reconnect all air bag system components, ensure all components are properly mounted.**
- **Clear diagnostic trouble codes referring to "DTC Clearance" in this section, if any.**
- **Repeat "Air Bag Diagnostic System Check" in this section to confirm that the trouble has been corrected.**

DTC B1044: Driver Pretensioner Initiator Circuit Short to Power Circuit (LH Steering Vehicle)
Passenger Pretensioner Initiator Circuit Short to Power Circuit (RH Steering Vehicle)
DTC B1048: Passenger Pretensioner Initiator Circuit Short to Power Circuit (LH Steering Vehicle)
Driver Pretensioner Initiator Circuit Short to Power Circuit (RH Steering Vehicle)

Step	Action	Yes	No
1	1) With ignition switch OFF, remove quarter lower trim of applicable side. 2) Disconnect connector “Q04” or “Q06” connector from seat belt pretensioner. 3) Check proper connection to applicable seat belt pretensioner at terminals in “Q04” or “Q06” connector. 4) If OK then connect special tools (A), (B) and (C) to “Q04” or “Q06” connector. With ignition switch ON, does DTC B1044 or B1048 still exist?	Go to step 2.	Ignition switch OFF, and replace seat belt pretensioner referring “Front Seat Belt” in Section 10.
2	1) With ignition switch OFF, disconnect special tools (A), (B) and (C) from “Q04” or “Q06” connector. 2) Disconnect connector “L31” or “L33” from air bag wire harness in floor harness. 3) Check proper connection to air bag wire harness at terminals in “L31” or “L33” connector. 4) If OK then connect special tools (B) and (D) to “L31” or “L33” connector. With ignition switch ON, does DTC B1044 or B1048 still exist?	Go to step 3.	Repair short “YEL” or “YEL/RED” wire circuit to power circuit.
3	1) With ignition switch OFF, disconnect special tools (A) and (D) from seat belt pretensioner wire harness connector “L31” or “L33”. 2) Disconnect SDM connector “Q60” from SDM. 3) Measure voltage. • DTC B1044: between “G102-11” terminal and body ground, and between “G102-12” terminal and body ground. • DTC B1048: between “G102-5” terminal and body ground, and between “G102-6” terminal and body ground. With ignition switch ON, is voltage 1 V or less?	Substitute a known-good SDM and recheck.	DTC B1044: Repair short “WHT” or “PNK” wire circuit to power circuit. DTC B1048: Repair short from “BRN” or “LT GRN” wire circuit to power circuit.

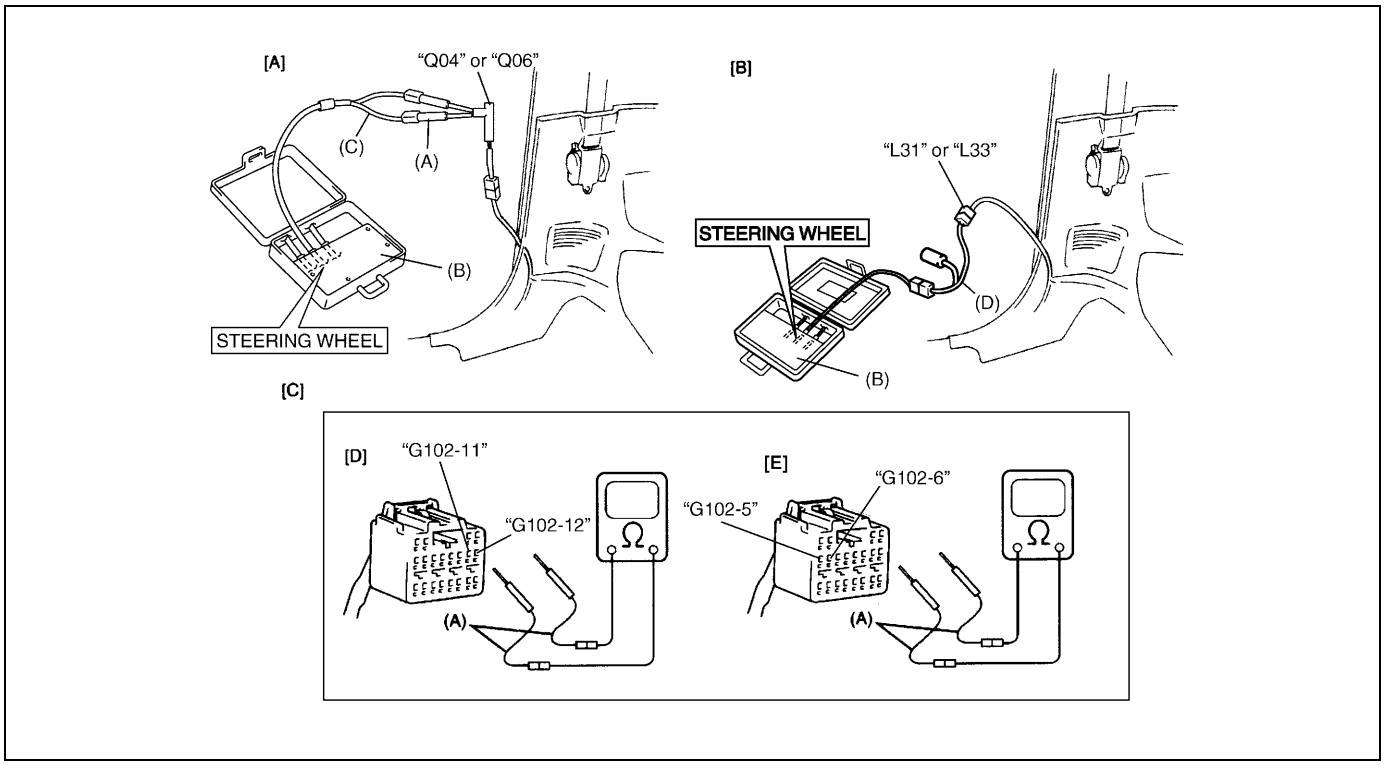

[A]: Fig. for STEP 1	[C]: Fig. for STEP 3	[E]: For DTC B1048
[B]: Fig. for STEP 2 and 3	[D]: For DTC B1044	

Special tool
(A): 09932-76010
(B): 09932-75010
(C): 09932-78310
(D): 09932-78340

NOTE:

Upon completion of inspection and repair work, perform the following items.

- **Reconnect all air bag system components, ensure all components are properly mounted.**
- **Clear diagnostic trouble codes referring to "DTC Clearance" in this section, if any.**
- **Repeat "Air Bag Diagnostic System Check" in this section to confirm that the trouble has been corrected.**

On-vehicle Service

Service Precautions

Service and diagnosis

WARNING / CAUTION labels are attached on each part of air bag system components (SDM, air bag (inflator) modules and seat belt pretensioners). Be sure to follow the instructions.

WARNING:

- **If the air bag system and another vehicle system both need repair, Suzuki recommends that the air bag system be repaired first, to help avoid unintended air bag system activation.**
- **Do not modify the steering wheel, dashboard or any other on or around air bag system components. Modifications can adversely affect air bag system performance and lead to injury.**
- **Failure to follow procedures could result in possible air bag system activation, personal injury or unneeded air bag system repairs.**

- Many of service procedures require disconnection of “AIR BAG” fuse and air bag (inflator) module(s) (driver and passenger) from initiator circuit to avoid an accidental deployment.
- Do not apply power to the air bag system unless all components are connected or a diagnostic chart requests it, as this will set a diagnostic trouble code (DTC).
- The “Air Bag Diagnostic System Check” must be the starting point of any air bag diagnostics. The “Air Bag Diagnostic System Check” will verify proper “AIR BAG” warning lamp operation and will lead you to the correct table to diagnose any air bag malfunctions. Bypassing these procedures may result in extended diagnostic time, incorrect diagnosis, and incorrect parts replacements.
- Never use air bag component parts from another vehicle.
- If the vehicle will be exposed to temperatures over 93°C (200°F) (for example, during a paint baking process), remove the air bag system components beforehand to avoid component damage or unintended system activation.
- When handling the air bag (inflator) modules (driver and passenger), seat belt pretensioners (driver and passenger), forward sensor or SDM, be careful not to drop it or apply an impact to it. If an excessive impact was applied (e.g., dropped from a height of 90 cm (3 ft) or more), never attempt disassembly or repair but replace it with a new one.
- When using electric welding, be sure to disconnect air bag (inflator) module connectors (driver and passenger) and seat belt pretensioner connectors (driver and passenger) respectively.
- When applying paint around the air bag system related parts, use care so that the harness or connector will not be exposed to the paint mist.
- Never expose air bag system component parts directly to hot air (drying or baking the vehicle after painting) or flames.

WARNING:

When performing service on or around air bag system components or air bag wiring, disable the air bag system temporarily referring to “Disabling Air Bag System” in this section.
Failure to follow procedures could result in possible air bag system activation, personal injury or unneeded air bag system repairs.

Disabling air bag system

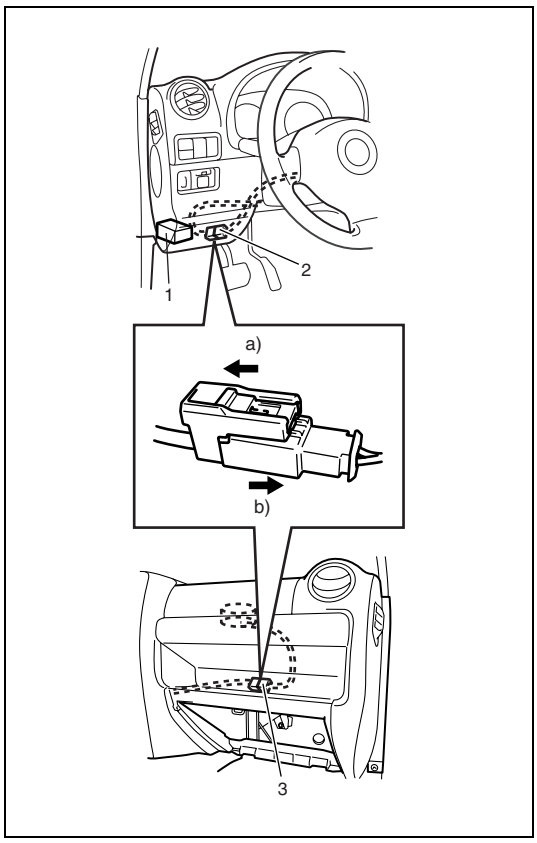

1) Turn steering wheel so that vehicle's wheels (front tires) and pointing straight ahead.
2) Turn ignition switch to "LOCK" position and remove key.
3) Remove "AIR BAG" fuse from fuse box (1).
4) Disconnect Yellow connector (2) of contact coil and combination switch assembly.
   a) Release locking of lock slider.
   b) After unlocked, disconnect connector.
5) Pull out glove box while pushing its stopper from both right and left sides and disconnect Yellow connector (3) of passenger air bag (inflator) module.
   a) Release locking of lock slider.
   b) After unlocked, disconnect connector.

NOTE:

With "AIR BAG" fuse removed and ignition switch ON, "AIR BAG" warning lamp will be ON.
This is normal operation and does not indicate a air bag system malfunction.

Enabling air bag system

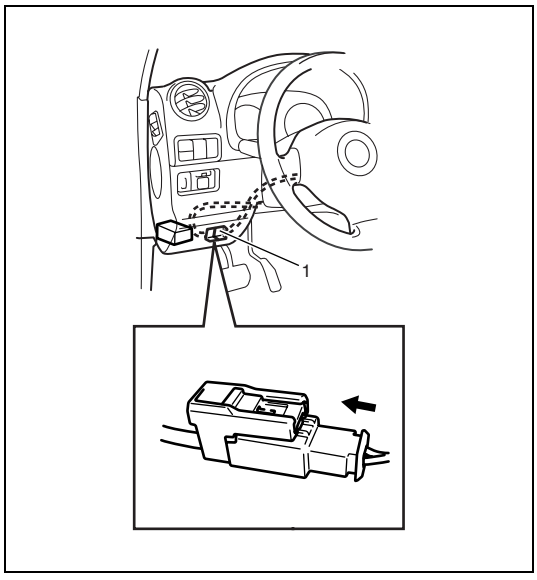

1) Turn ignition switch to "LOCK" position and remove key.
2) Connect Yellow connector (1) of contact coil and combination switch assembly, by pushing connector till click is heard from it.

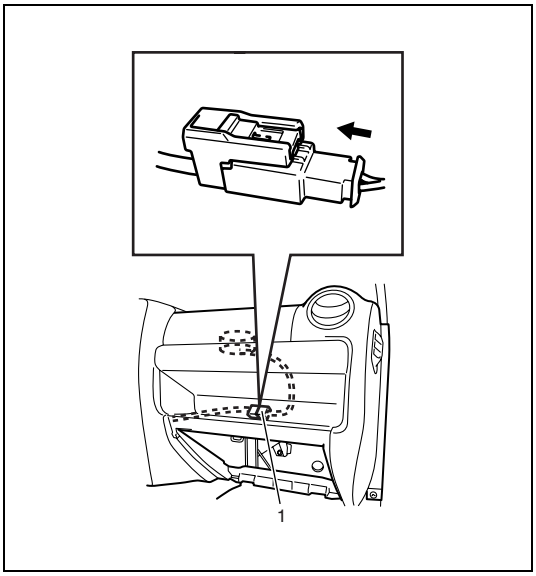

3) Connect Yellow connector (1) of passenger air bag (inflator) module by pushing connector till click is heard from it.
4) Install glove box.
5) Install “AIR BAG” fuse to fuse box.
6) Turn ignition switch to ON position and verify that “AIR BAG” warning lamp flashes 6 times and then turns OFF.
   If it does not operate as described, perform “Air Bag Diagnostic System Check” in this section.

Handling and storage

SDM

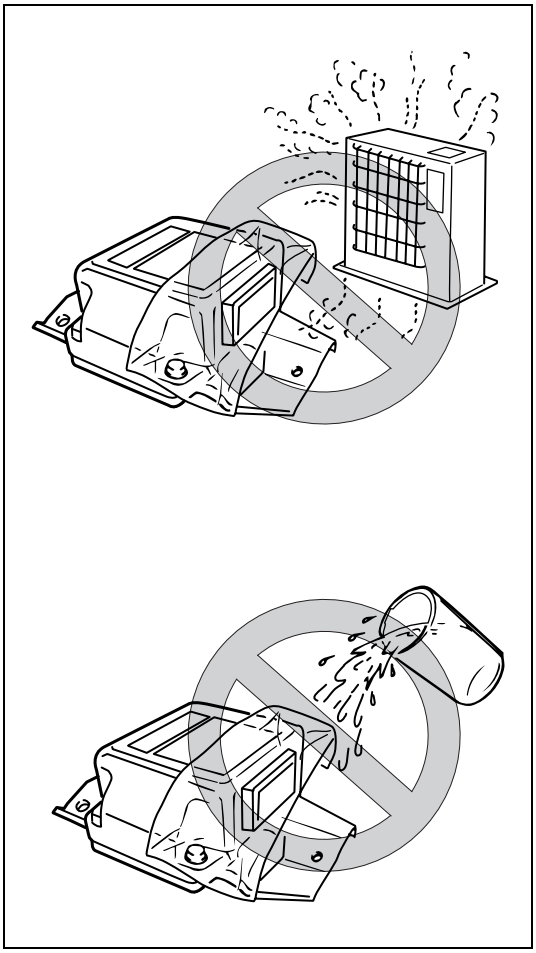

WARNING:

Never power up air bag system when SDM is not rigidly attached to the vehicle. Otherwise, personal injury may result.

CAUTION:

After detecting one time of such collision as to meet deployment conditions, the SDM must not be used. Refer to “Air Bag Diagnostic System Check” in this section when checking the SDM.

- Never attempt disassembly of SDM.
- When storing SDM, select a place where neither high temperature nor high humidity is anticipated and oil, water and dust are kept off.
- If SDM was dropped from a height of 90 cm (3 ft) or more or if it is found to be damaged or deformed, replace it with a new one.
- If installation part of SDM was damaged, repair that part completely before reinstallation.
- All SDM and mounting bracket fasteners must be carefully torqued and the arrow must be pointed toward the front of the vehicle to ensure proper operation of the air bag system.

Live (Undeployed) Air Bag (Inflator) Modules

Special care is necessary when handling and storing a live (undeployed) air bag (inflator) modules.
The rapid gas generation produced during deployment of the air bag could cause the air bag (inflator) module, or an object in front of the air bag (inflator) module, to be thrown through the air in the unlikely event of an accidental deployment.

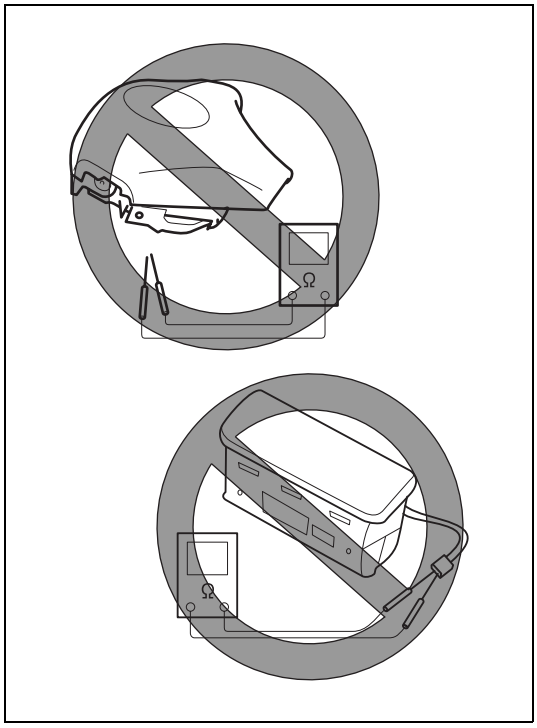

WARNING:

Never attempt to measure the resistance of the air bag (inflator) modules (driver and passenger). It is very dangerous as the electric current from the tester may deploy the air bag.

- Never attempt disassembly of the air bag (inflator) modules.
- If any abnormality is found, be sure to replace it with new one as an assembly.
- When an abnormality is noted as existing in the live (undeployed) air bag (inflator) module, be sure to deploy it before discarding it.
- When grease, cleaning agent, oil, water, etc., got on the air bag (inflator) modules (driver and passenger), wipe it off immediately with a dry cloth.
- If air bag (inflator) module was dropped from a height of 90 cm (3 ft) or more, it should be replaced with a new one as an assembly.

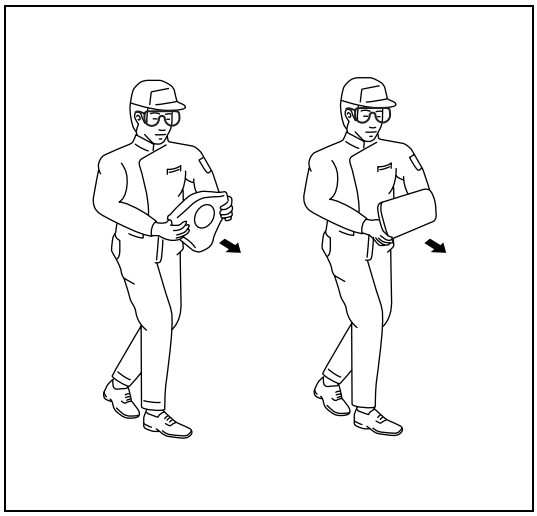

WARNING:

- **For handling and storage of a live air bag (inflator) module, select a place where the ambient temperature below 65°C (150°F), without high humidity and away from electric noise.**
- **When carrying a live air bag (inflator) module, make sure the bag opening is pointed away from you. In case of an accidental deployment, the bag will then deploy with minimal chance of injury. Never carry the air bag (inflator) module by the wires or connector on the underside of the module.**

Otherwise, personal injury may result.

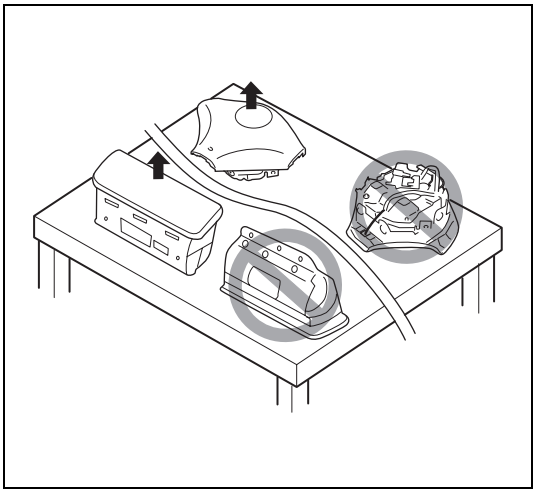

WARNING:

When placing a live air bag (inflator) module on bench or other surface, always face the bag up, away from the surface. As the live passenger air bag (inflator) module must be placed with its bag (trim cover) facing up.
It is also prohibited to place anything on top of the trim cover and stack air bag (inflator) modules.
This is necessary so that a free space is provided to allow the air bag to expand in the unlikely event of accidental deployment.
Otherwise, personal injury may result.

Live (Inactivated) Seat Belt Pretensioner

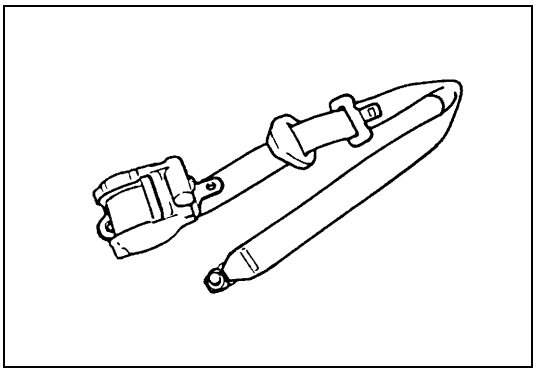

Special care is necessary when handling and storing a live (inactivated) seat belt pretensioners.
Also, when the seat belt pretensioners activate, gas is generated and the seat belt is retracted into the retractor assembly quickly.
Note, therefore, that if they activate accidentally, the seat belt pretensioners and other object(s) around them may be thrown through the air.

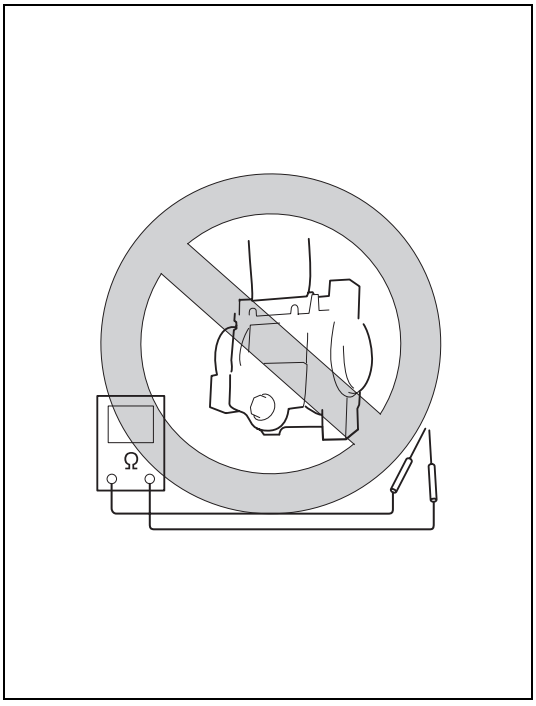

WARNING:

Never attempt to measure the resistance of the seat belt pretensioners. It is very dangerous as the electric current from the tester may activate pretensioner.

- Never attempt to disassemble the seat belt pretensioners (retractor assembly).
- If any abnormality is found, be sure to replace it with new one as an assembly.
- When an abnormality is noted as existing in the live (inactivated) seat belt pretensioner, be sure to activate it before discarding it.
- When grease, cleaning agent oil, water, etc., got on the seat belt pretensioners (retractor assembly), wipe it off immediately with a dry cloth.
- If seat belt pretensioner was dropped from a height of 90 cm (3 ft) or more, it should be replaced with a new one as an assembly.

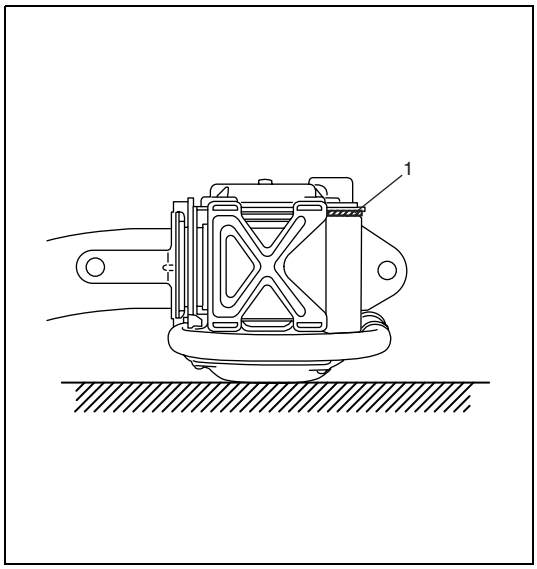

WARNING:

- **For handling and storage of a live seat belt pretensioner, select a place where the ambient temperature below 65°C (150°F), without high humidity and away from electric noise.**
- **Do not carry the seat belt pretensioner by webbing.**
- **When placing a live seat belt pretensioner on the workbench or other surface, be sure not to lay it with its exhaust hole (1) provided side facing down. It is also prohibited to put something on its face with an exhaust hole (1) or to put a seat belt pretensioner on top of another.**

Otherwise, personal injury may result.

Deployed Air Bag (Inflator) Module and Activated Seat Belt Pretensioner

WARNING:

- **The air bag (inflator) module and seat belt pretensioner immediately after deployment / activation is very hot. Wait for at least 30 minutes to cool it off before proceeding the work.**
- **Do not apply water, oil, etc. to deployed air bag (inflator) module and to activate seat belt pretensioner.**
- **After an air bag (inflator) module has been deployed, the surface of the air bag may contain a powdery residue. This powder consists primarily of cornstarch (used to lubricate the bag as it inflates) and by-products of the chemical reaction. As with many service procedures, gloves and safety glasses should be worn.**
- **Wash your hands with mild soap and water after completing the work.**

Refer to the procedure described under “Deployed Air Bag (Inflator) Module and Activated Seat Belt Pretensioner Disposal” in this section.

Disposal

Do not dispose of the live (undeployed) air bag (inflator) modules and the live (inactivated) seat belt pretensioners. When disposal is necessary, be sure to deploy / activate the air bag and seat belt pretensioner according to deployment / activation procedure described in “Air Bag (Inflator) Module and Seat Belt Pretensioner Disposal” in this section.

WARNING:

Failure to follow proper air bag (inflator) module and seat belt pretensioner disposal procedures can result in air bag deployment and pretensioner activation which could cause personal injury. Undeployed air bag (inflator) module and inactivated seat belt pretensioner must not be disposed of through normal refuse channels.

The undeployed air bag (inflator) module and inactivated seat belt pretensioner contain substances that can cause severe illness or personal injury if the sealed container is damaged during disposal.

Air bag wire harness and connector in instrument panel harness, floor harness, main harness and pretensioner harness

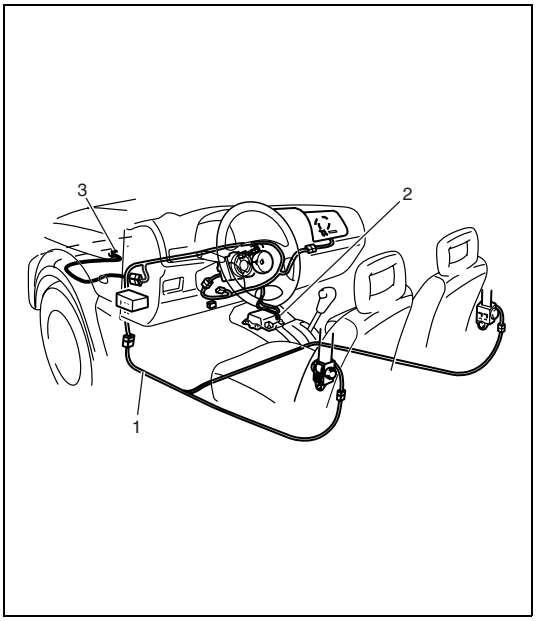

Air bag wire harness (1) is included in instrument panel harness, floor harness, main harness and pretensioner harness. The air bag wire harness (1) can be identified easily as it is covered with a yellow protection tube and it has yellow connectors. Be very careful when handling it.

- When an open in air bag wire harness (1), damaged wire harness, connector or terminal is found, replace wire harness, connectors and terminals as an assembly.
- When installing it, be careful so that the air bag wire harness (1) is not caught or does not interfere with other parts.
- Make sure all air bag system grounding point (2) is clean and ground is securely fastened for optimum metal-to-metal contact. Poor grounding can cause intermittent problems that are difficult to diagnose.

3. Forward sensor (K9K engine model only)

Repairs and Inspections Required after an Accident

CAUTION:

- **All air bag system components, including the electrical harness (component mounting points), must be inspected after an accident. If any components are damaged or bent, they must be replaced even if air bag system activation did not occur.**
- **Never use air bag system parts from another vehicle.**
- **Do not attempt to service the parts below. Service of these parts is by replacement only.**
  - **– Driver / Passenger air bag (inflator) module, Driver / Passenger seat belt pretensioner**
  - **– SDM**
  - **– Contact coil and combination switch assembly**
  - **– Air bag wire harness in instrument panel harness, floor harness and pretensioner harness.**
- **Proper operation of the air bag system requires that any repairs to the vehicle structure return it to its original production configuration.**

CAUTION:

After detecting one time of such collision as to meet deployment conditions, the SDM must not be used. Refer to "Air Bag Diagnostic System Check" in this section when checking the SDM.

Accident with Deployment / Activation - Component Replacement

The following components must be replaced.

- Driver and passenger air bag (inflator) modules
- Driver and passenger seat belt pretensioners
- SDM
- Forward sensor (K9K engine model only)

Accident with or without Deployment / Activation - Component Inspections

Certain air bag system components must be inspected after any crash, whether the air bag system activated or not.

Those components are:

- Steering column and shaft joints
  - – Check for length, damage and bend according to "Checking Steering Column for Accident Damage" in Section 3C.

If any faulty condition is found in above checks, replace faulty part.

- Steering column bracket and capsules
  - – Check for damage and bent.

If any faulty condition is found in above checks, replace faulty part.

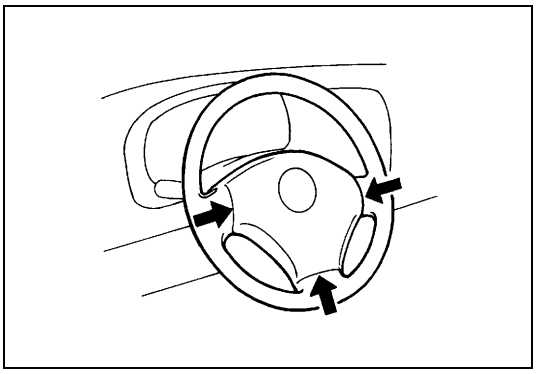

- Steering wheel and driver air bag (inflator) module
  - Check for damage or air bag (inflator) module fitness.
  - Check trim cover (pad surface) for cracks.
  - Check wire harness and connector for damage or tightness.

If any faulty condition is found in above checks, replace faulty part.

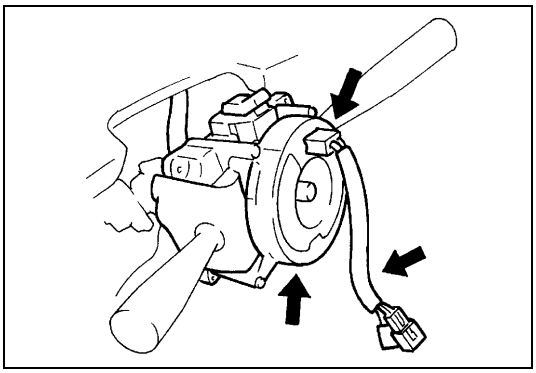

- Contact coil and combination switch assembly
  - Check wire harness and connectors for damage or tightness.
  - Check contact coil case for damage.

If any faulty condition is found in above checks, replace.

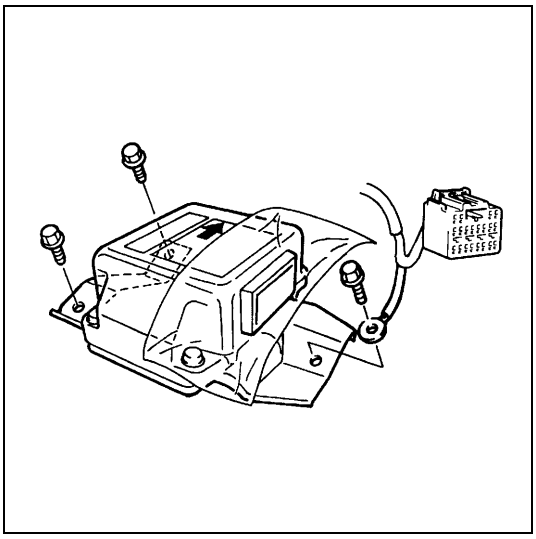

- SDM and SDM plate
  - Check for external damage such as deformation, scratch, crack, peeled paint, etc.
  - Check that SDM cannot be installed properly due to a cause in itself. (There is a gap between SDM and SDM plate, or it cannot be fixed securely.)
  - Check that connector or lead wire of SDM has a scorching, melting or damage.
  - Check that connector is connected securely or locked.
  - Check SDM connector and terminals for tightness.
  - Check SDM sets a diagnostic trouble code referring to “DTC Check” in this section, and the diagnostic table leads to a malfunctioning SDM.

If any faulty condition is found in above checks, replace.

- Instrument panel member and reinforcement
  - Check for any distortion, bending, cracking or other damage.

If any faulty condition is found in above checks, replace.

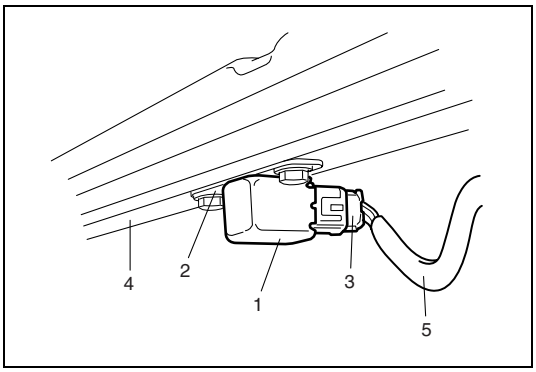

- Forward sensor (K9K engine model only)
  - Check sensor (1), sensor bracket (2), and front panel (4) for damage bend or rust.
  - Check that connector (3) or lead wire (5) of forward sensor has a scorching, melting or damage.

If any faulty condition is found in above checks, replace.

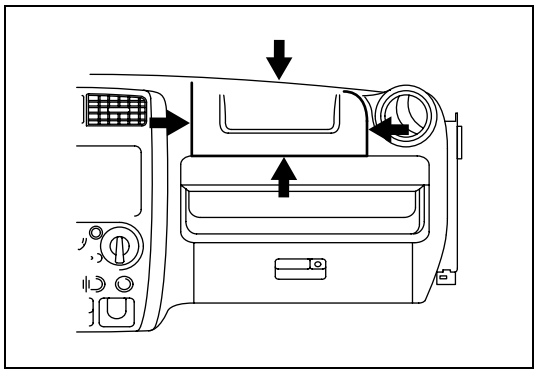

- Passenger air bag (inflator) module
  - Check for dents, cracks, damage or fitness.
  - Check trim cover for cracks or deformities.
  - Check harness and connector for damage or tightness.

If any faulty condition is found in above checks, replace.

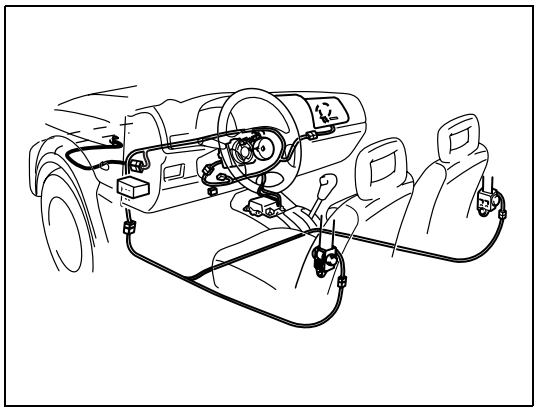

- Air bag wire harness and connections
  - Check for damages, deformities or poor connections referring to “Intermittents and Poor Connections” in this section.
  - Check wire harness clamps for tightness.

If any faulty condition is found, correct or replace.

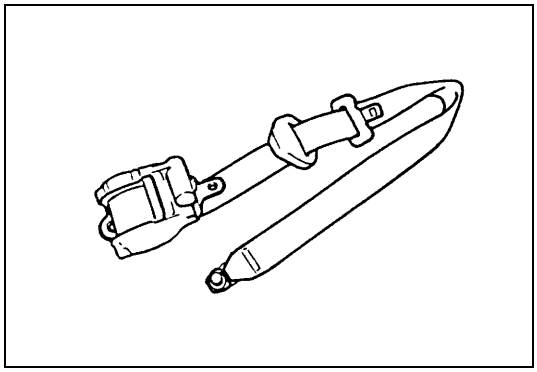

- Seat belt pretensioner
  - Check for dents, cracks, damage or fitness
  - Check harness and connector for damage or tightness.

If any faulty condition is found in above checks, replace.

- Seat belts and mounting points
  - Refer to “Front Seat Belt” in Section 10.
- “AIR BAG” warning lamp
  - After vehicle is completely repaired, perform “Air Bag Diagnostic System Check” in this section.

SDM

WARNING:

During service procedures, be very careful when handling a Sensing and Diagnostic Module (SDM).
Be sure to read "Service Precautions" in this section before starting to work and observe every precaution during work. Neglecting them may result in personal injury or inactivation of the air bag system when necessary.

Removal

1) Disconnect negative cable at battery.
2) Disable air bag system referring to "Disabling Air Bag System" in this section.

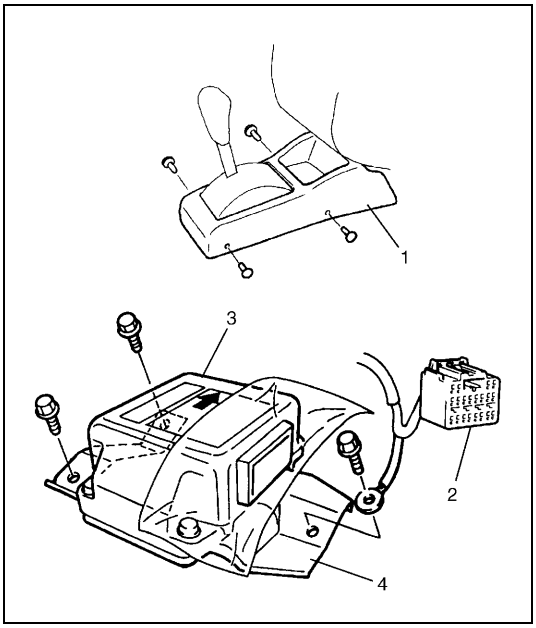

3) Remove center console box (1) by removing crips.
4) Disconnect SDM connector (2) from SDM (3).
5) Remove SDM (3) with SDM plate (4) as an assembly from vehicle.

CAUTION:

Do not separate SDM (3) and SDM plate (4).

Inspection

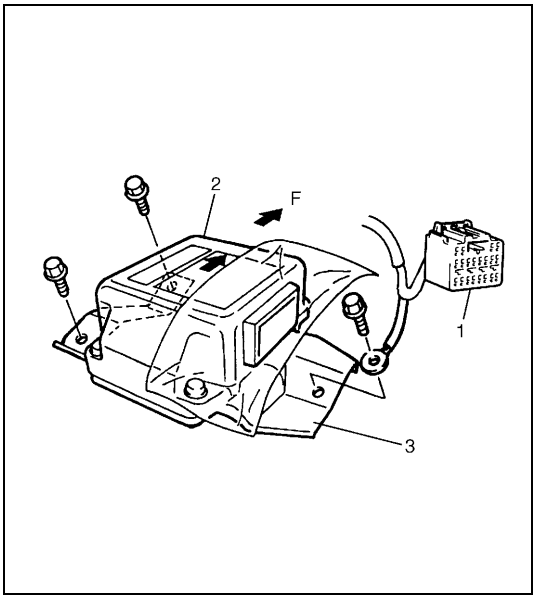

CAUTION:

- **Do not connect a tester whatever type it may be.**
- **Never repair or disassemble SDM (3).**
- **If SDM has been dropped from a height of 90 cm (3 ft) or more, or if there are cracks, dents or other defects in the case or plate, replace it with a new one.**

- Check SDM (2) and SDM plate (3) for dents, cracks or deformation.
- Check SDM connector (1) for damage, cracks or lock mechanism.
- Check SDM terminal for bent, corrosion or rust.

If any faulty condition is found in above checks, replace.

F: Forward

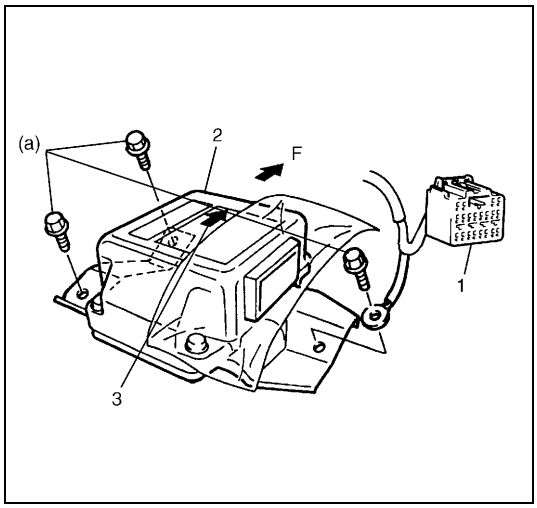

Installation

For installation, reverse removal procedure noting the following points.

- Ensure that arrow (3) on the SDM (2) is pointing toward the front of the vehicle.
- Tighten SDM bolts to specified torque.

Tightening torque
SDM mounting bolt (a): 6 N·m (0.6 kg-m, 4.5 lb-ft)

- Connect SDM connector (1) to SDM (2) securely.
- Enable air bag system referring to “Enabling Air Bag System” in this section.

F: Forward

Forward Sensor

WARNING:

During service procedures, be very careful when handling a sensor.

- **Never strike or jar a sensor.**
- **Under some circumstances, it could cause improper operation of the air bag system. A sensor and mounting bracket bolts must be carefully torqued to assure proper operation.**

Removal

1) Disconnect negative cable at battery.
2) Disable air bag system. Refer to “Disabling Air Bag System” in this section.
3) Remove front bumper referring to “Front Bumper” in Section 9.

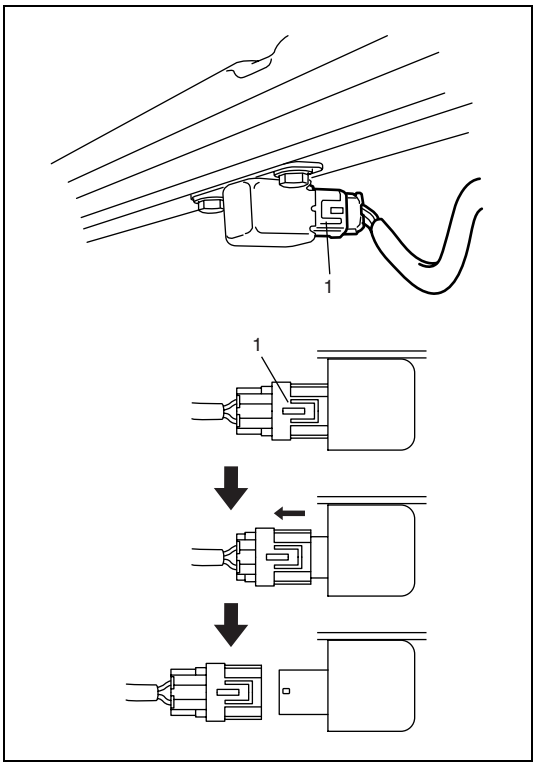

4) Disconnect forward sensor connector sliding connector outer (1) as shown.

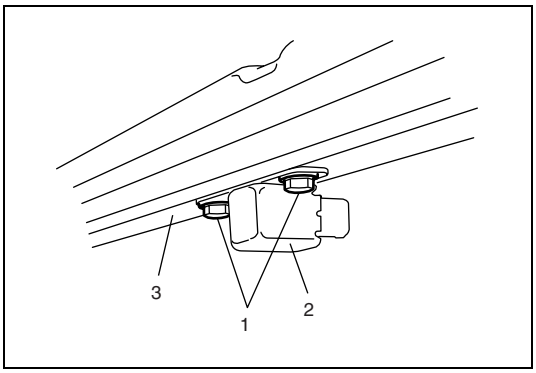

5) Remove forward sensor bolts (1), and forward sensor (2) from front panel (3).

Inspection

CAUTION:
- **Never disassemble forward sensor.**
- **Sensor should be replaced when it was dropped from a height of 90 cm (3 ft) or more.**

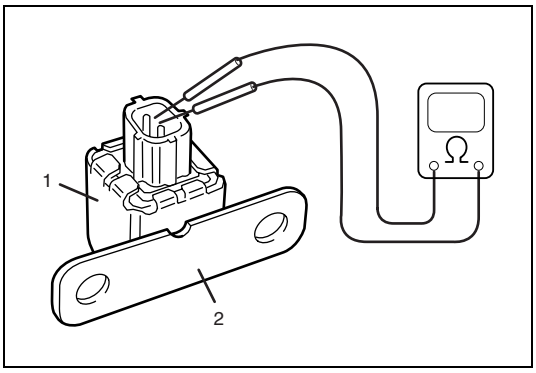

- Check sensor (1) and its bracket (2) for dents, cracks, deformation or rust.
- Check sensor connector (sensor side and harness side) or lock mechanism for damage or crack.
- Check connector terminals for bent, corrosion or rust.
- Check sensor for resistance.

Sensor resistance: 738 – 902 Ω

Installation

CAUTION:
Proper operation of forward sensor requires sensor be rigidly attached to vehicle structure and that the arrow on sensor be pointing toward the front of the vehicle.

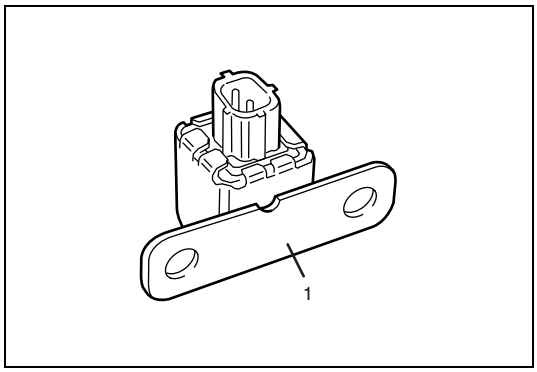

1) Check that none of following faulty conditions exists.
   - Bend or deformity of sensor bracket (1) and front panel.
   - Foreign matter on mating surfaces of sensor bracket (1) and front panel or excessive rust.

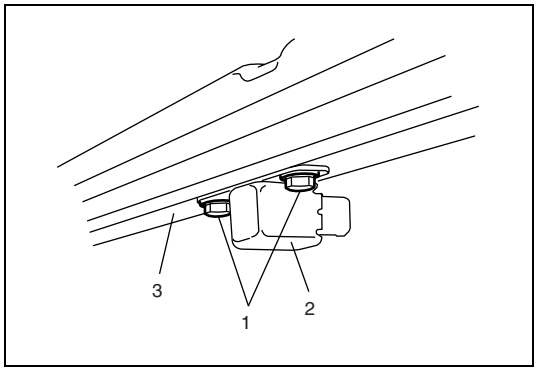

2) Apply thread lock cement to mounting bolts thread. Install forward sensor (1) on front panel (2) and tighten mounting bolts (3) to specified torque.

"A": Thread lock cement "1332B" 99000-32100

Tightening torque
(a): 9 N·m (0.9 kg-m, 6.5 lb-ft)

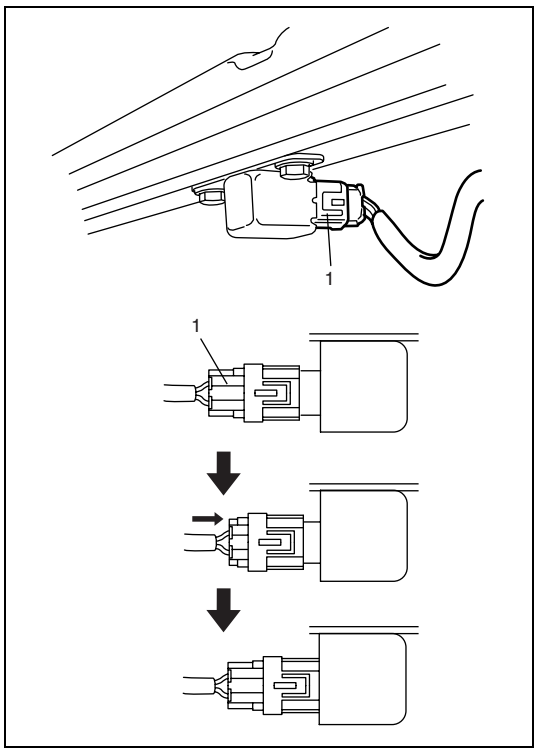

3) Connect forward sensor connector pushing connector inner (1) as shown.

4) Install front bumper referring to "Front bumper" in Section 9.
5) Connect negative cable at battery.
6) Enable air bag system. Refer to "Enabling Air Bag System" in this section.

Passenger Air Bag (Inflator) Module

WARNING:
- **Never attempt to disassemble or repair the passenger air bag (inflator) module. If any abnormality is found, be sure to replace it with new one as an assembly.**
- **Be sure to read "Service Precautions" in this section before starting to work and observe every precaution during work. Neglecting them may result in personal injury or undeployment of the air bag when necessary.**

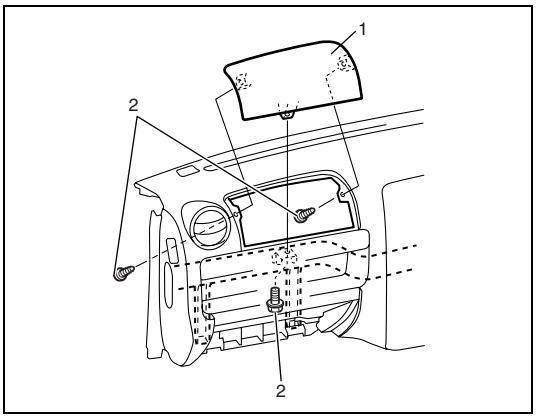

Removal

1) Disconnect negative cable at battery.
2) Disable air bag system referring to "Disabling Air Bag System" in this section.
3) Remove passenger air bag (inflator) module attaching bolts (2) and passenger air bag (inflator) module (1) from vehicle.

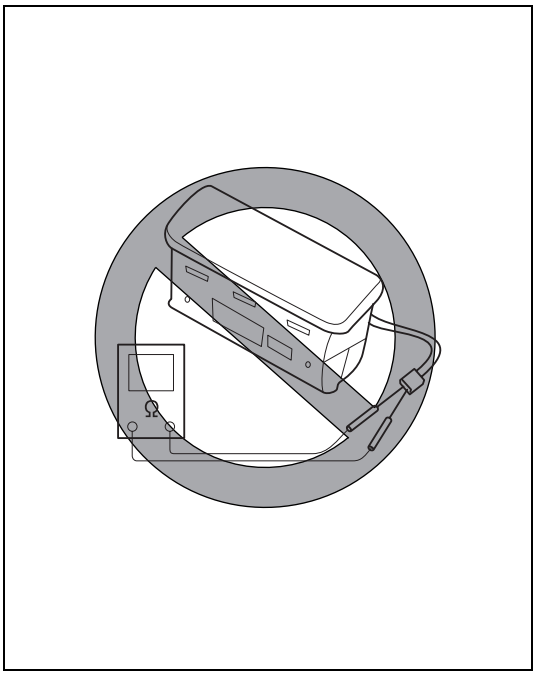

Inspection

WARNING:

Never measure resistance of passenger air bag (inflator) module or disassemble it. Otherwise personal injury may result.

CAUTION:

If air bag (Inflator) module was dropped from a height or 90 cm (3 ft) or more, it should be replaced.

Check air bag (inflator) module appearance visually for the following symptoms and if any one of them is applicable, replace with a new one.
- Air bag has deployed.
- There is a crack in trim cover (pad surface).
- Wire harness or connector is damaged.
- Air bag (inflator) module is damaged or a strong impact was applied to it.

Installation

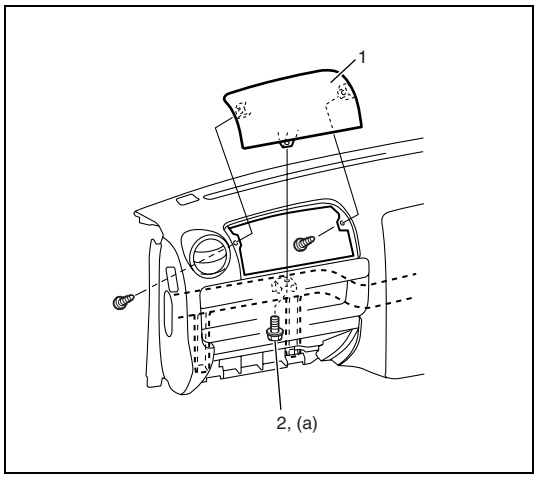

1) Install passenger air bag (inflator) module (1) to instrument panel.
2) Tighten passenger air bag (inflator) module attaching bolt (2) to specified torque.

Tightening torque
Passenger air bag (inflator) module mounting bolt
(a): 23 N·m (2.3 kg-m, 16.5 lb-ft)

3) Connect negative cable to battery.
4) Enable air bag system. Refer to “Enabling Air Bag System” in this section.

Air Bag (Inflator) Module and Seat Belt Pretensioner Disposal

WARNING:

Failure to follow proper air bag (inflator) module and seat belt pretensioner disposal procedures can result in air bag deployment and pretensioner activation which may cause personal injury.
Do not dispose of live (undeployed) air bag (inflator) modules and seat belt pretensioners. Because undeployed air bag (inflator) module / inactivated seat belt pretensioner must not be disposed of through normal refuse channels.
Undeployed air bag (inflator) module and inactivated seat belt pretensioner contain substances that can cause severe illness or personal injury if sealed container is damaged during disposal.

Air bag (inflator) module / seat belt pretensioner can be deployed / activated inside or outside of vehicle. Deployment / Activation method used depends upon final disposition of vehicle. Review the following instructions in order to determine which will work best in a given situation.

Deployment / Activation Outside of Vehicle:
When you intend to return the vehicle to service, deploy the air bag (inflator) module(s) or activate seat belt pretensioner(s) outside of the vehicle.

Deployment / Activation Inside of Vehicle:
When the vehicle will be destroyed, or salvaged for component parts, deploy the air bag modules and/or activate seat belt pretensioners installed on vehicle.

WARNING:

The following precautions must be observed for this work. Failure to observe any of them may result in personal injury.

- **Procedure should be followed strictly as described here.**
- **Be sure to read "Service Precautions" in this section beforehand.**
- **To avoid accidental deployment / activation, this work should be performed by no more than one person.**
- **Since smoke is produced when air bag (inflator) module is deployed and pretensioner is activated, select well-ventilated area.**
- **Air bag (inflator) module and seat belt pretensioner will immediately deploy / activate when 12 volts vehicle battery is connected to it. Wear safety glasses throughout this entire deployment / activation and disposal procedure.**
- **Wear suitable ear protection when deploying air bag (inflator) module / activating seat belt pretensioner. Also, advise those who are in area close to deployment / activation site to wear suitable ear protection.**
- **Do not deploy / activate two or more air bag system components (air bag (inflator) modules and seat belt pretensioners) at the same time.**
- **Never connect deployment harness to any 12 volts vehicle battery before connecting deployment harness to air bag (inflator) module and seat belt pretensioner. Deployment harness shall remain shorted and not be connected to 12 volts vehicle battery till you are ready to deploy air bag (inflator) module or activate seat belt pretensioner.**

Deployment / Activation Outside of Vehicle

When you intend to return the vehicle to service, deploy the air bag (inflator) module(s) or activate seat belt pretensioner(s) outside of the vehicle.

1) Turn ignition switch to “LOCK” position and remove key.
2) Wear safety glasses during this deployment / activation procedure.

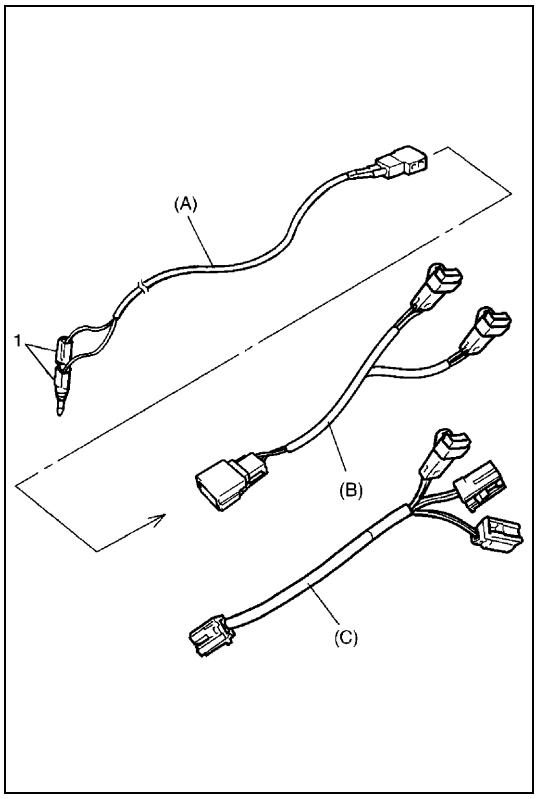

3) Check that there is no open, short or damage in special tools (deployment harness (A), adapter cable (B) and adapter cable (C)). If any faulty is found, do not use it and be sure to use new special tool.

Special tool
(A): 09932-75031
(B): 09932-76510
(C): 09932-78332

NOTE:

If faulty seat belt pretensioner connector of adapter cable (C) is found, replace it to spare connector (special tool).

4) Short two deployment harness leads (1) together by fully seating one banana plug into the other.

WARNING:

Deployment harness (A) shall remain shorted and not be connected to 12 volts vehicle battery till you are ready to deploy air bag module or activate seat belt pretensioner.

5) Remove applicable air bag (inflator) module or seat belt pretensioner as follows.
   - For driver air bag (inflator) module
     Remove driver air bag (inflator) module referring to “Driver Air Bag (Inflator) Module” in Section 3C.
   - For passenger air bag (inflator) module
     Remove passenger air bag (inflator) module referring to “Passenger Air Bag (inflator) Module” in this section.
   - For seat belt pretensioner
     Remove seat belt referring to “Front Seat Belt with Pretensioner” in Section 10.

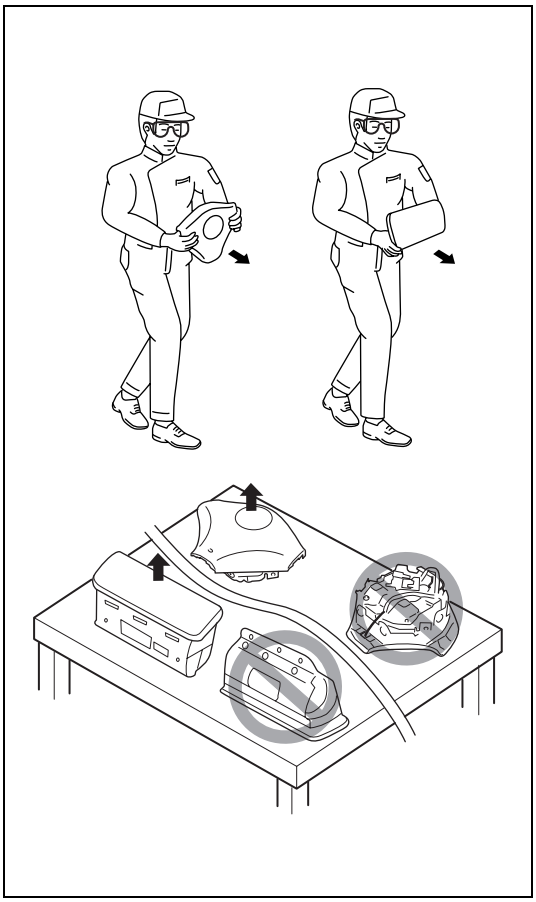

WARNING:

- **For handing and storage of live air bag (inflator) module, select place where ambient temperature below 65°C (150°F), without high humidity and away from electric noise.**
- **Always carry live air bag (inflator) module with trim cover away from you.**
- **When storing live air bag (inflator) module or when leaving live air bag (inflator) module unattended on bench or other surface, always face trim cover up and away from surface. It is also prohibited to place anything on top of the trim cover and stack air bag (inflator) modules. This is necessary so that free space is provided to allow air bag (inflator) module to expand in the unlikely event of accidental deployment.**

Failure to follow procedures may result in personal injury.

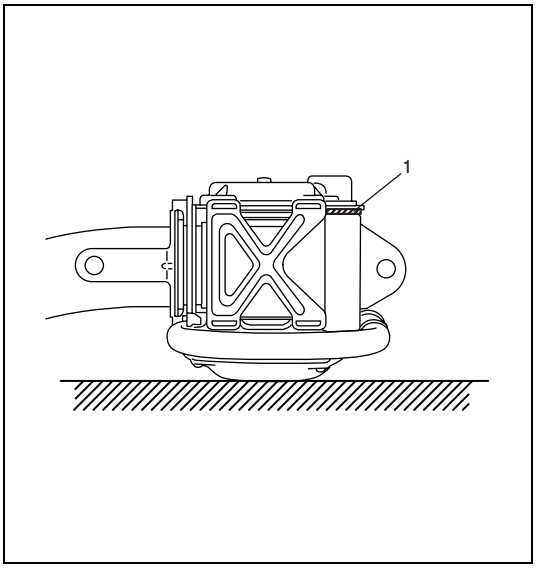

WARNING:

- **For handing and storage of a live seat belt pretensioner, select a place where the ambient temperature below 65°C (150°F), without high humidity and away from electric noise.**
- **Do not carry the seat belt pretensioner by webbing.**
- **When placing a live seat belt pretensioner on the workbench or other surface, be sure not to lay it with its exhaust hole (1) provided side facing down. It is also prohibited to put something on its face with an exhaust hole (1) or to put a seat belt pretensioner on top of another.**

Otherwise, personal injury may result.

6) Set air bag (inflator) module or seat belt pretensioner as follows.

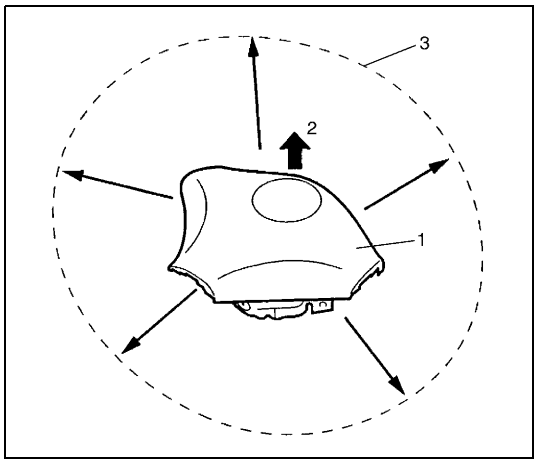

- For driver air bag (inflator) module

a) Clear space (3) on ground about 185 cm (6 ft) in diameter where driver air bag (inflator) module (1) for deployment. Paved, outdoor location where there is no activity is preferred. If outdoor location is not available, space on shop floor where there is no activity and provide sufficient ventilation. Ensure no loose or flammable objects are within deployment area.

b) Place driver air bag (inflator) module (1) with its vinyl trim cover facing up (2) on ground in step a).

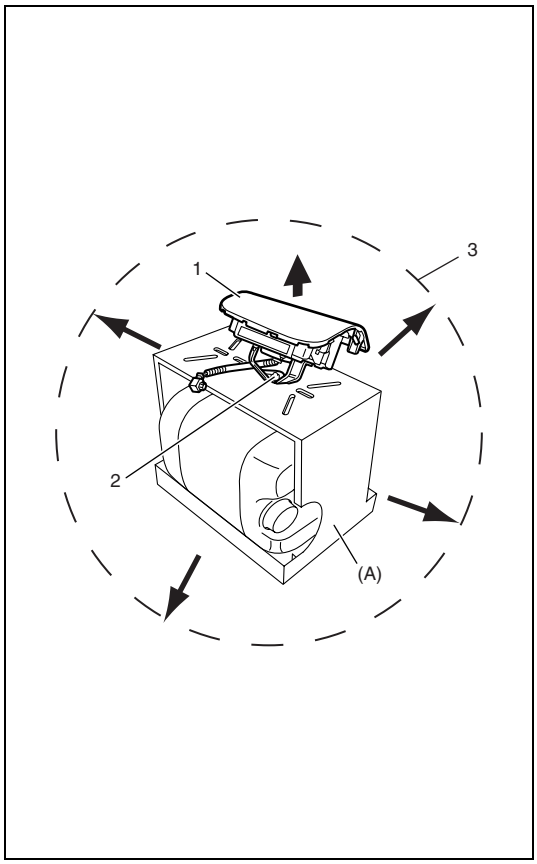

- For passenger air bag (inflator) module

a) Clear space (3) on ground about 185 cm (6 ft) in diameter where passenger air bag (inflator) module (1) for deployment. Paved, outdoor location where there is no activity is preferred. If outdoor location is not available, space on shop floor where there is no activity and provide sufficient ventilation. Ensure no loose or flammable objects are within deployment area.

b) Place deployment fixture (A) on ground in step a).

Special tool
(A): 09932-75041

c) Fill plastic reservoir in deployment fixture (A) with water or sand. This is necessary to provide sufficient stabilization of fixture during deployment.

d) Attach passenger air bag (inflator) module (1) in deployment fixture (A) securely using M8 bolt (2).

CAUTION:

Be sure to use M8 size and 7T strength bolt for fixing passenger air bag (inflator) module (1) to deployment fixture (A).

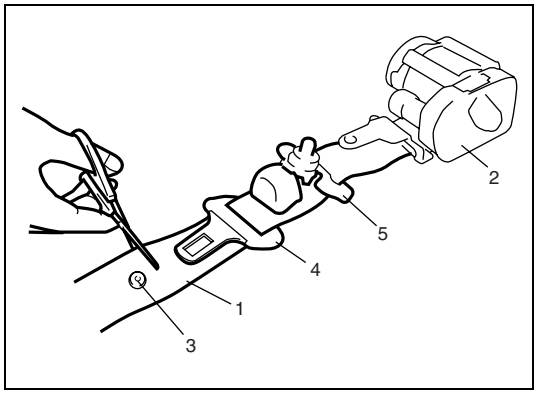

- For seat belt pretensioner

a) Cut webbing (1) at tongue plate stopper (3) of seat belt pretensioner (2) side as shown.

NOTE:

Hold seat belt pretensioner (2) vertically in the same condition as it is installed. Otherwise, webbing can't be pulled out.

b) Remove tongue plate (4) and shoulder anchor (5) from webbing.

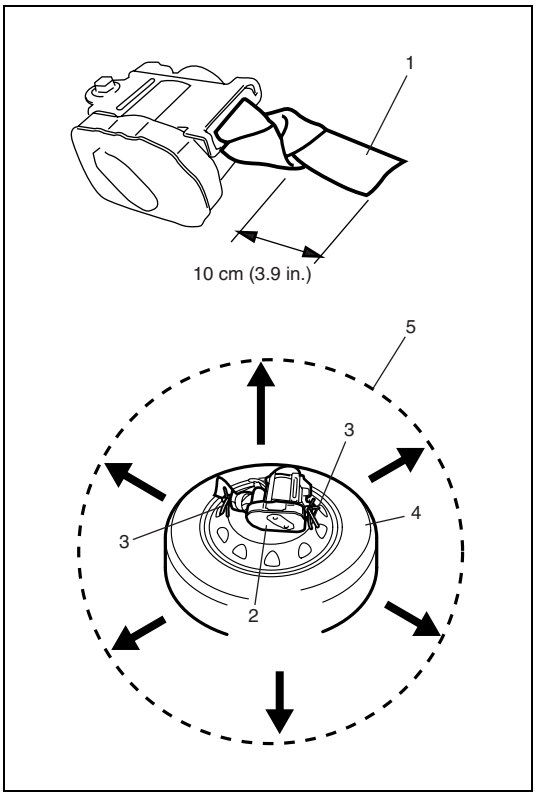

c) Tie webbing (1) tightly at 10 cm (3.9 in.) from cutting edge as shown.
d) Tie seat belt pretensioner (2) with wire harness (3) to wheel-installed tire (4) as shown.

Wire harness specification:

Stripped wire harness section 1.25 mm^2 (0.0019 $in.^2$) or more (Stripped wire harness diameter 1.25 mm (0.05 in.) or more)

NOTE:

Wind wire harness (3) around at least 3 times.

e) Clear space (5) on ground about 185 cm (6 ft) in diameter where seat belt pretensioner (2) is to be activated. Paved, outdoor location where there is no activity is preferred. If outdoor location is not available, space on shop floor where there is no activity and provide sufficient ventilation. Ensure no loose or flammable objects are within activation area.
f) Place wheel-installed tire (4) with seat belt pretensioner (2) on ground in step e).

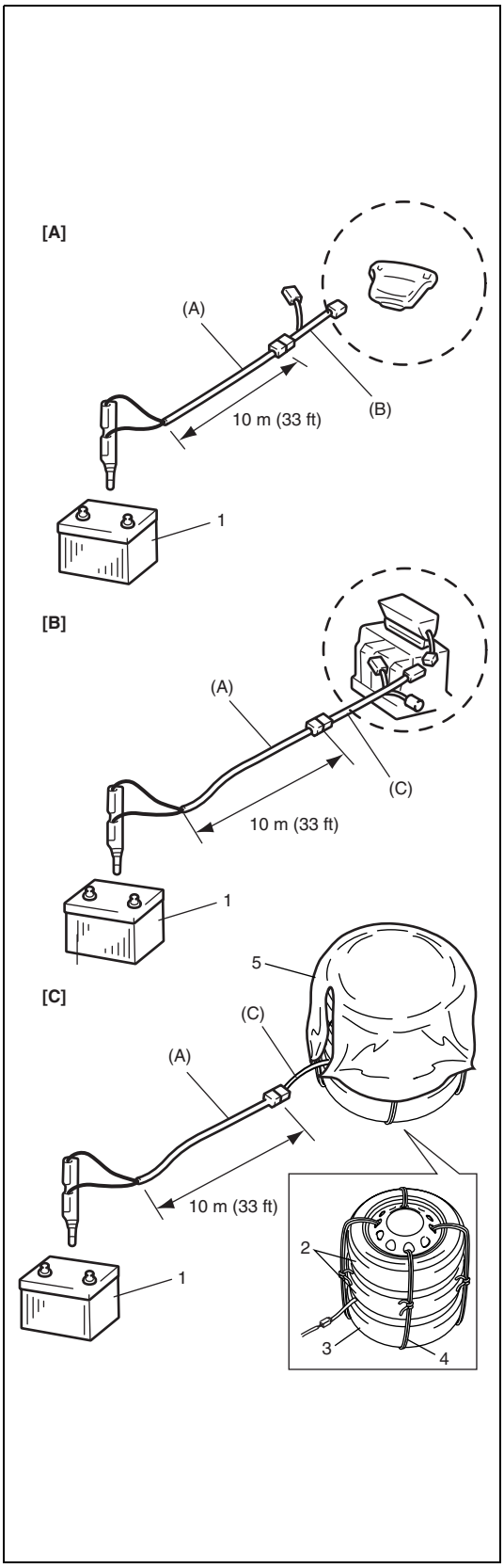

7) Stretch deployment harness (A) from air bag (inflator) module or seat belt pretensioner to its full length 10 m (33 ft).

Special tool
(A): 09932-75031

8) Place 12 volts vehicle battery (1) near shorted end of deployment harness (A).
9) Verify that area around air bag (inflator) module or seat belt pretensioner is clear of all people and loose or flammable objects.
10) Connect adapter cable (B) or (C) as follows.

Special tool
(B): 09932-76510
(C): 09932-78332

- For driver air bag (inflator) module
  Verify that driver air bag (inflator) module is resting with its vinyl trim cover facing up, and connect adapter cable (B) to driver air bag (inflator) module.
- For passenger air bag (inflator) module
  Verify that passenger air bag (inflator) module is firmly and properly secured on deployment fixture (special tool), and connect adapter cable (C) to passenger air bag (inflator) module.
- For seat belt pretensioner

a) Connect adapter cable (C) to seat belt pretensioner.
b) Pile 2 wheel-installed tires (2) on top of tire with seat belt pretensioner (3), and tie them with wire harness (4) as shown.

Wire harness specification:

Stripped wire harness section 1.25 mm^2 (0.0019 in.^{2}) or more (Stripped wire harness diameter 1.25 mm (0.05 in.) or more)

NOTE:

Wind wire harness around at least 2 times.

c) Drape blanket (5) over those tires.

11) Connect adapter cable (B) or (C) to deployment harness (A) connector and lock connectors with lock lever.

[A]: For driver air bag (inflator) module
[B]: For passenger air bag (inflator) module
[C]: For seat belt pretensioner

12) Notify all people in immediate area that you intend to deploy / activate air bag (inflator) module or seat belt pretensioner.

NOTE:

- **When air bag (inflator) module deploys and seat belt pretensioner activates, rapid gas expansion will create substantial report. Wear suitable ear protection. Notify all people in immediate area that you intend to deploy air bag (inflator) module or activate seat belt pretensioner and suitable ear protection should be worn.**
- **When driver air bag (inflator) module deploys, driver air bag (inflator) module may jump about 30 cm (1 ft) vertically. This is normal reaction to force of rapid gas expansion inside of drive air bag (inflator) module.**
- **After air bag (inflator) module has been deployed, surface of air bag (inflator) may contain powdery residue. This powder consists primarily of cornstarch (used to lubricate bag (inflator) as it inflates) and byproducts of chemical reaction.**

WARNING:

- **Do not place deployed air bag (inflator) module and activated seat belt pretensioner near any flammable objects.**
- **Do not apply water, oil, etc. to deployed air bag (inflator) module and activated seat belt pretensioner.**
- **Wait for about 30 minutes before touching any metal surface of air bag (inflater) module or seat belt pretensioner module. Disregarding these precautions may cause fire or personal injury.**

Failure to follow procedures may result in fire or personal injury.

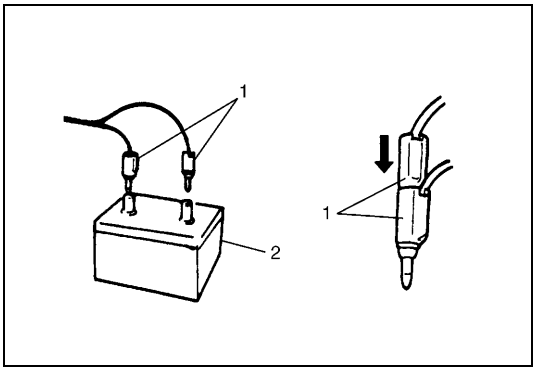

13) Separate two banana plugs (1) on deployment harness.
14) Connect deployment harness to 12 volts vehicle battery (2). This will immediately deploy or activate air bag (inflator) module or seat belt pretensioner.
15) Disconnect deployment harness from 12 volts vehicle battery (2) and short two deployment harness leads together by fully seating one banana plug into the other.

16) After confirming that air bag (inflator) module deployed and/or seat belt pretensioner activated, proceed to Step (7) through Step 21). In the unlikely event that air bag (inflator) module did not deploy or seat belt pretensioner did not activate, proceed to Step 22) through Step 25).

17) Put on pair of shop gloves to protect your hands from possible irritation and heat when handling deployed air bag (inflator) module or activated seat belt pretensioner.
18) Disconnect adapter cable (special tool) from air bag (inflator) module or seat belt pretensioner as soon as possible. This will prevent adapter cable (special tool) from damage due to possible contact with hot air bag (inflator) module or hot seat belt pretensioner.
19) Check adapter cable connector as follows.
    - For air bag (inflator) module
      Air bag (inflator) module connector of adapter cable (special tool) are designed to be reused. However they should be inspected for damage after deployment. Replace it with new adapter cable (special tool), if necessary.
    - For seat belt pretentioner
      Seat belt pretensioner connector of adapter cable (special tool) should be inspected for damage when seat belt pretensioner is activated. Replace it with spare connector (special tool), if necessary.

NOTE:

Do not reuse faulty seat belt pretensioner connector of adapter cable (special tool) because it can be destroyed by shock when seat belt pretensioner is activated.

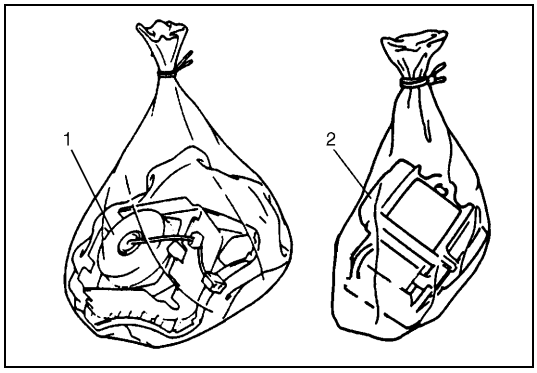

20) Dispose of deployed air bag (inflator) module (1) or activated seat belt pretensioner (2) through normal refuse channels after it has cooled for at least 30 minutes and tightly seal air bag (inflator) module (1) or seat belt pretensioner (2) in strong vinyl bag. (Refer to “Deployed Air Bag (Inflator) Module and Activated Seat Belt Pretensioner Disposal” in detail.)
21) Wash your hands with mild soap and water afterward.

NOTE:

Remaining steps are to be followed in the unlikely event that air bag (inflator) module did not deploy or seat belt pretensioner did not activate.

22) Ensure that deployment harness has been disconnected from 12 volts vehicle battery and that its two banana plugs have been shorted together by fully seating one banana plug into the other.
23) Disconnect deployment harness and adapter cable from air bag (inflator) module or seat belt pretensioner.
24) Temporarily store undeployed air bag (inflator) module or inactivated seat belt pretensioner referring to “Service Precautions” for details.
25) Contact your local distributor for further assistance.

Deployment / Activation Inside Vehicle

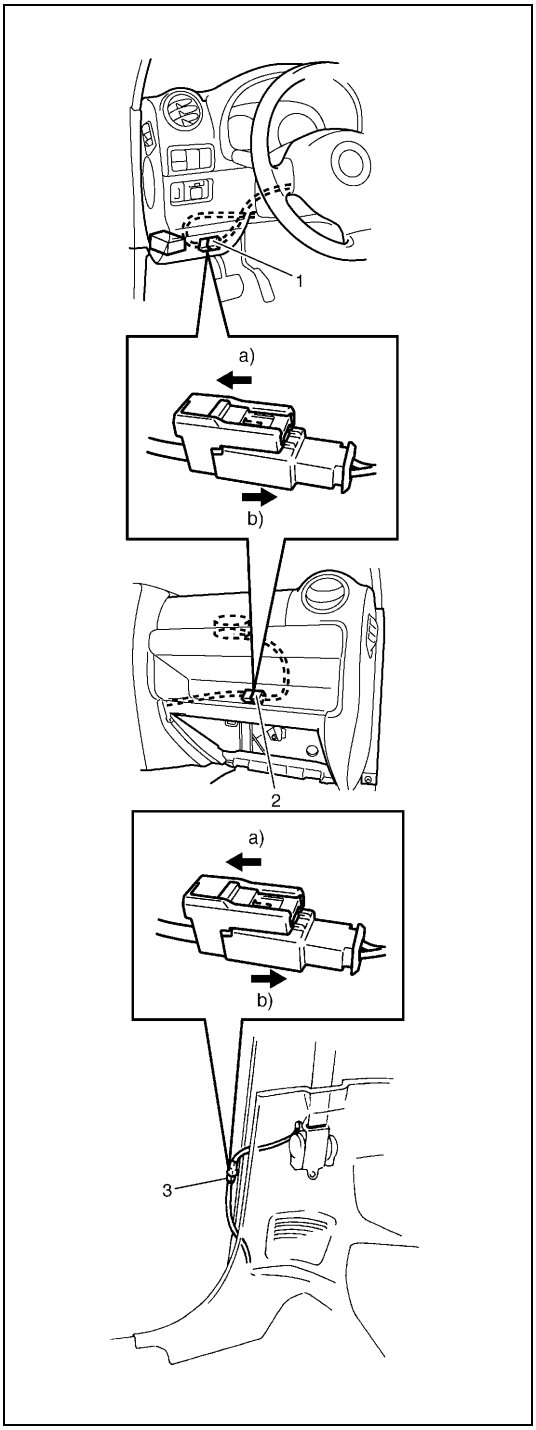

When the vehicle will be destroyed, or salvaged for component parts, deploy the air bag modules and activate seat belt pretensioners installed on vehicle.

1) Turn ignition switch to “LOCK” position, remove key and put on safety glasses.
2) Remove all loose objects from front seats and instrument panel.
3) Disconnect air bag (inflator) module or seat belt pretensioner connector as follows.
   - For driver air bag (inflator) module
     Disconnect contact coil connector (1) located near base of steering column.
   - For passenger air bag (inflator) module
     Remove glove box from instrument panel and disconnect passenger air bag (inflator) module connector (2).
   - For seat belt pretensioner
     Remove both side (driver and passenger side) quarter lower trims and disconnect seat belt pretensioner connectors (3).
4) Confirm that each air bag (inflator) module and seat belt pretensioner is securely mounted.

[A]: Driver air bag (inflator) module
[B]: Passenger air bag (inflator) module
[C]: Seat belt pretensioner

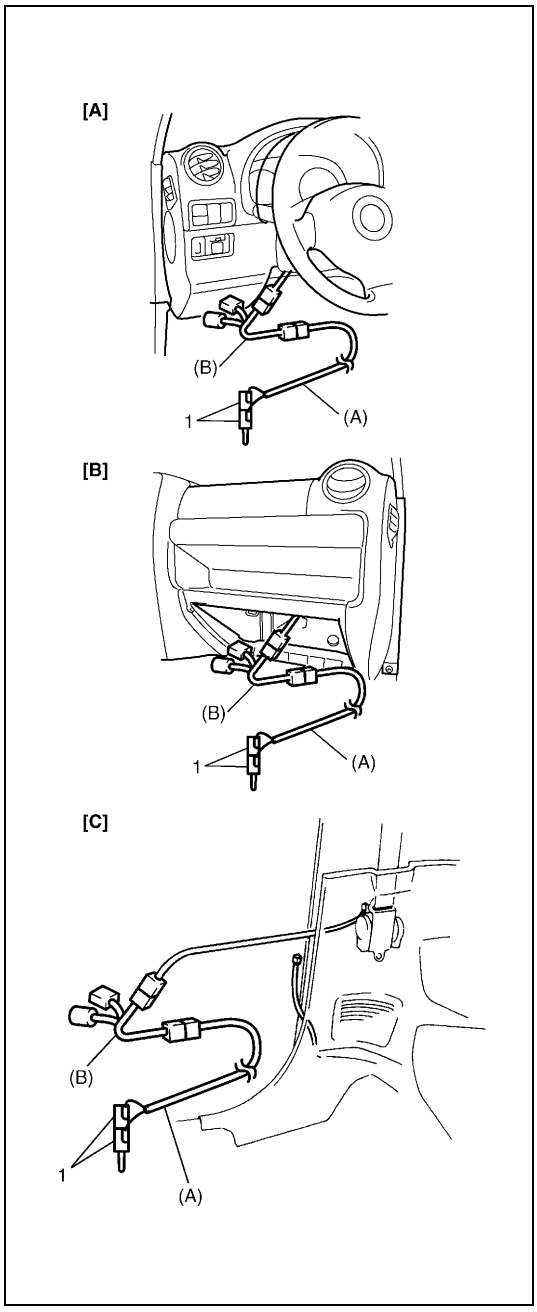

5) Check that there is no open, short or damage in special tools (deployment harness (A) and adapter cable (B)). If any faulty condition is found, do not use it and be sure to use new deployment harness (A) and/or adapter cable (B). And connect adapter cable (B) to deployment harness (A) and lock connectors with lock slider (2).

Special tool
(A): 09932-75031
(B): 09932-78332

6) Short two deployment harness leads (1) together by fully seating one banana plug into the other.

WARNING:
Deployment harness (A) shall remain shorted and not be connected to 12 volts vehicle battery until you are ready to deploy air bag (inflator) module or activate seat belt pretensioner.

7) Connect adapter cable (B) in series with deployment harness (A) to air bag (inflator) module or seat belt pretensioner as follows.
- For air bag (inflator) module
  Connect adapter cable (B) in series with deployment harness (A) and push adapter cable (B) connector to air bag (inflator) module connector (driver, passenger or side of driver and passenger) till click can be heard.
- For seat belt pretensioner
  Connect adapter cable (B) in series with deployment harness (A) to seat belt pretensioner and lock connector with lock part.

[A]: Driver air bag (inflator) module
[B]: Passenger air bag (inflator) module
[C]: Seat belt pretensioner

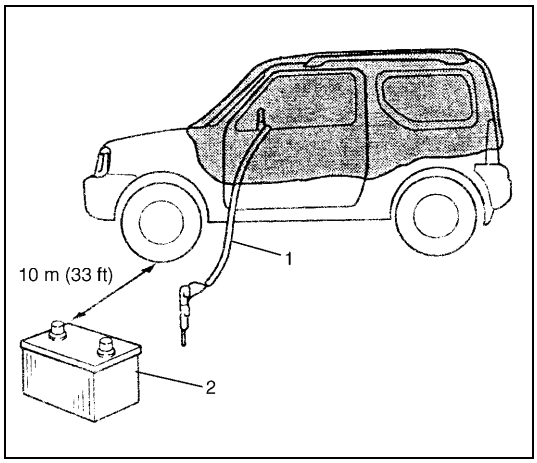

8) Route deployment harness (1) out of vehicle.
9) Verify that inside of vehicle and area surrounding vehicle are clear of all people and loose or flammable objects.
10) Stretch deployment harness (1) to its full length 10 m (33 ft).
11) Place 12 volts vehicle battery (2) near shorted end of deployment harness (1).
12) Completely cover windshield area and front door window openings with drop cloth, a blanket or any similar item (3). This reduces possibility of injury due to possible fragmentation of vehicle's glass or interior.

13) Notify all people in immediate area that you intend to deploy air bag (inflator) module or activate seat belt pretensioner.

NOTE:

- **When air bag (inflator) module deploys or seat belt pretensioner activates, rapid gas expansion will create substantial report. Wear suitable ear protection. Notify all people in immediate area that you intend to deploy air bag (inflator) module or to activate seat belt pretensioner and suitable ear protection should be worn.**
- **After air bag (inflator) module has been deployed, surface of air bag may contain powdery residue. This powder consists primarily of cornstarch (used to lubricate air bag (inflator) module as it inflates) and by-products of chemical reaction.**

WARNING:

- **Do not place deployed air bag (inflator) module and activated seat belt pretensioner near any flammable objects.**
- **Do not apply water, oil, etc. to deployed air bag (inflator) module and activated seat belt pretensioner.**
- **Wait for about 30 minutes before touching any metal surface of air bag (inflater) module or seat belt pretensioner module. Disregarding these precautions may cause fire or personal injury.**

Failure to follow procedures may result in fire or personal injury.

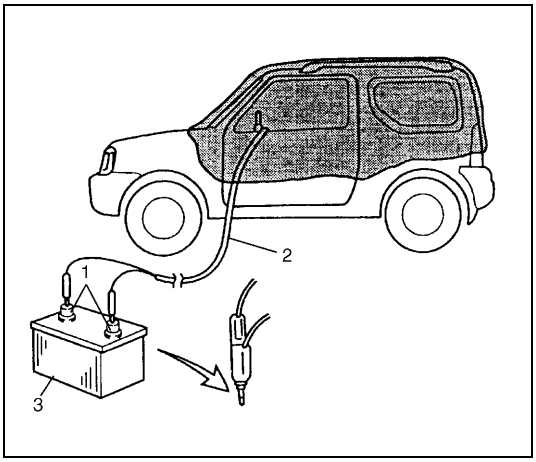

14) Separate two banana plugs (1) on deployment harness (2).
15) Connect deployment harness (2) to 12 volts vehicle battery (3). This will immediately deploy or activate air bag (inflator) module or seat belt pretensioner.
16) Disconnect deployment harness (2) from 12 volts vehicle battery (3) and short two deployment harness leads together by fully seating one banana plug into the other.
17) Repeat Step 3) through Step 16) to deploy / activate air bag (inflator) modules and seat belt pretensioners which has not been deployed / activated, if any.
18) After confirming that air bag (inflator) module and seat belt pretensioner deployed and/or activated, proceed to Step 19) through Step 23). In the unlikely event that air bag (inflator) module did not deploy or seat belt pretensioner did not activate, proceed to Step 24) through Step 26).

19) Carefully remove drop cloth from vehicle and clean off any fragments or discard it entirely.
20) Put on pair of shop gloves to protect your hands from possible irritation and heat when handling deployed air bag (inflator) module and activated seat belt pretensioner.
21) Disconnect adapter cable (special tool) from air bag (inflator) module or seat belt pretensioner as soon as possible. This will prevent adapter cable (special tool) from damage due to possible contact with hot air bag (inflator) module or hot seat belt pretensioner.
22) Check adapter cable connector as follows.
    Adapter cable connector (special tool) are designed to be reused. However they should be inspected for damage after deployment and replaced if necessary.
23) Scrap the vehicle in the same manner as the vehicle without air bag system.

NOTE:

Remaining steps are to be followed in the unlikely event that air bag (inflator) module did not deploy or seat belt pretensioner did not activate.

24) Remove undeployed air bag (inflator) module(s) and/or inactivated seat belt pretensioner(s) from vehicle as follows.
    - For driver air bag (inflator) module
      Remove driver air bag (inflator) module referring to “Driver Air Bag (Inflator) Module” in Section 3C.
    - For passenger air bag (inflator) module
      Remove passenger air bag (inflator) module referring to “Passenger Air Bag (Inflator) Module” in this section.
    - For seat belt pretensioner
      Remove seat belt referring to “Front Seat Belt with Pretensioner” in Section 10.
25) Temporarily store undeployed air bag (inflator) module and/or inactivated seat belt pretensioner referring to “Service Precautions” in this section.
26) Contact your local distributor for further assistance.

Tightening Torque Specification

Fastening part	Tightening torque		
	N•m	kg-m	lb-ft
SDM mounting bolt	6	0.6	4.5
Passenger air bag (inflator) module bolt	23	2.3	16.5
Forward sensor mounting bolt	9	0.9	6.5

Special Tool

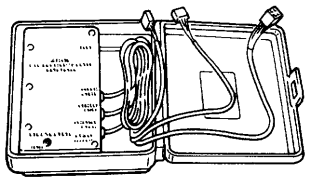 09932-75010 Air bag driver / passenger load tool	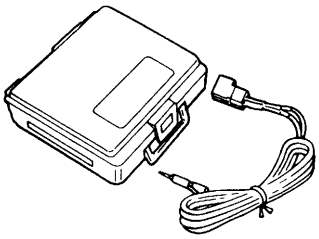 09932-75031 Air bag deployment harness	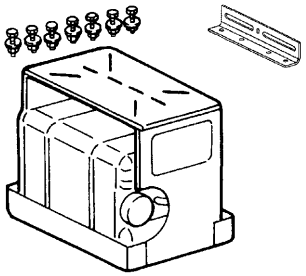 09932-75041 Passenger air bag (inflator) module deployment fixture	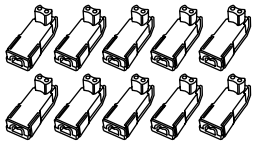 09932-75420 Spare connector (See NOTE “A”.)
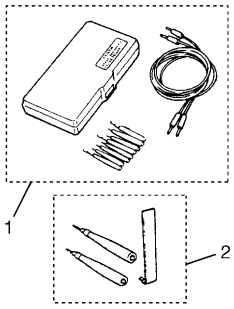 09932-76010 Connector test adapter set (See NOTE “B”.)	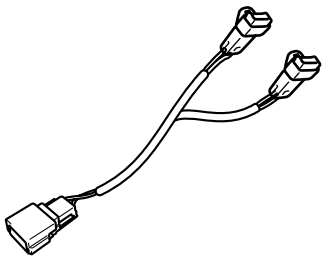 09932-76510 Deployment adapter cable	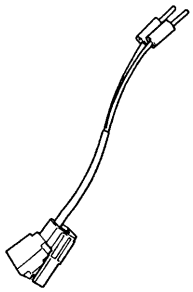 09932-78310 Adapter cable	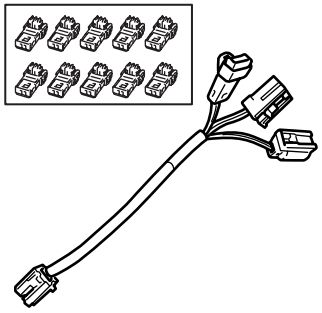 09932-78332 Adapter cable
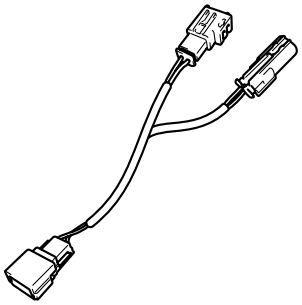 09932-78340 Adapter cable	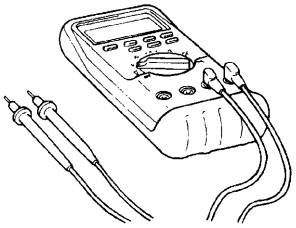 Digital multimeter (See NOTE “C” and WARNING.)	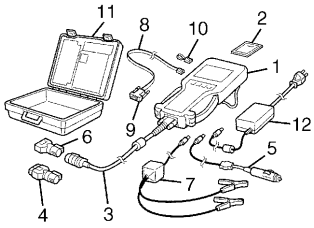 Tech 2 kit (SUZUKI scan tool) (See NOTE “D”.)	

WARNING:
Be sure to use the specified digital multimeter. Otherwise, air bag (inflator) module deployment or personal injury may result.

NOTE:

- **"A": These connector are spare connector for adaptor cable (09932-78320).**
- **"B": This set includes the following items.**
  1. Connector test adapter kit (09932-75020), 2. Connector test adapter & shorting bar release tool (09932-76020)
- **"C": Digital multimeter specification: Maximum test current is 10 mA or less at minimum range of resistance measurement.**
- **"D": This kit includes the following items and substitutes for the Tech 1A kit.**
  1. Tech 2, 2. PCMCIA card, 3. DLC cable, 4. SAE 16/19 adapter, 5. Cigarette cable, 6. DLC loopback adapter, 7. Battery power cable, 8. RS232 cable, 9. RS232 adapter, 10. RS232 loopback connector, 11. Storage case, 12. Power supply

Prepared by
SUZUKI MOTOR CORPORATION

1st Ed. October, 2004

1012