IMPORTANT

WARNING/CAUTION/NOTE

Please read this manual and follow its instructions carefully. To emphasize special information, the words **WARNING, CAUTION** and **NOTE** have special meanings. Pay special attention to the messages highlighted by these signal words.

WARNING:
Indicates a potential hazard that could result in death or injury.

CAUTION:
Indicates a potential hazard that could result in vehicle damage.

NOTE:
Indicates special information to make maintenance easier or instructions clearer.

WARNING:
This service manual is intended for authorized Suzuki dealers and qualified service technicians only. Inexperienced technicians or technicians without the proper tools and equipment may not be able to properly perform the services described in this manual.
Improper repair may result in injury to the technician and may render the vehicle unsafe for the driver and passengers.

WARNING:
For vehicles equipped with a Supplemental Restraint (Air Bag) System:

- **Service on and around the air bag system components or wiring must be performed only by an authorized SUZUKI dealer. Refer to "Air Bag System Components and Wiring Location View" under "General Description" in air bag system section in order to confirm whether you are performing service on or near the air bag system components or wiring. Please observe all WARNINGS and "Service Precautions" under "On-Vehicle Service" in air bag system section before performing service on or around the air bag system components or wiring. Failure to follow WARNINGS could result in unintentional activation of the system or could render the system inoperative. Either of these two conditions may result in severe injury.**
- **If the air bag system and another vehicle system both need repair, Suzuki recommends that the air bag system be repaired first, to help avoid unintended air bag system activation.**
- **Do not modify the steering wheel, instrument panel or any other air bag system component (on or around air bag system components or wiring). Modifications can adversely affect air bag system performance and lead to injury.**
- **If the vehicle will be exposed to temperatures over 93°C (200°F) (for example, during a paint baking process), remove the air bag system components beforehand to avoid component damage or unintended activation.**

The circle with a slash in this manual means "Do not do this" or "Do not let this happen".

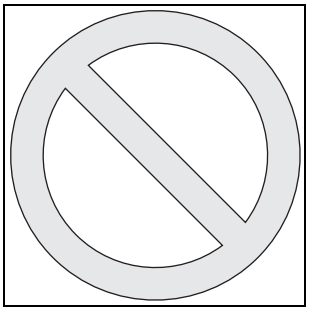

Foreword

This SUPPLEMENTARY SERVICE MANUAL is a supplement to Jimny (SN413) SERVICE MANUAL. It has been prepared exclusively for the following applicable model.

Applicable model: Jimny with K9K diesel engine (SN415D)

It describes only different service information of the above applicable model as compared with Jimny (SN413) SERVICE MANUAL. Therefore, whenever servicing the above applicable model, consult this supplement first. And for any section, item or description not found in this supplement, refer to the related service manuals below.

When replacing parts or servicing by disassembling, it is recommended to use SUZUKI genuine parts, tools and service materials (lubricant, sealants, etc.) as specified in each description.

All information, illustrations and specifications contained in this literature are based on the latest product information available at the time of publication approval. And used as the main subject of description is the vehicle of standard specifications among others. Therefore, note that illustrations may differ from the vehicle being actually serviced.
The right is reserved to make changes at any time without notice.

NOTE:
"SUZUKI Dealers" means Authorized SUZUKI Service Workshop (in Europe).

RELATED MANUAL:

Manual Name	Manual No.
Jimny (SN413) SERVICE MANUAL	99500-81A10-01E
Jimny (SN413/SN415D) WIRING DIAGRAM MANUAL	99512-81A30-015

SUZUKI MOTOR CORPORATION

© COPYRIGHT SUZUKI MOTOR CORPORATION 2004

TABLE OF CONTENTS

GENERAL INFORMATION	General Information	**0A**	**0A**
	Maintenance and Lubrication	**0B**	**0B**
HEATING AND AIR CONDITIONING	Heater and Ventilation	**1A**	**1A**
	Air Conditioning (Optional)	**1B**	**1B**
STEERING, SUSPENSION, WHEELS AND TIRES	Steering, Suspension, Wheels and Tires	**3**	**3**
	Front Wheel Alignment	**3A**	**3A**
	Power Steering (P/S) System (if equipped)	**3B1**	**3B1**
	Steering Wheel and Column	**3C**	**3C**
	Front Suspension	**3D**	**3D**
	Rear Suspension	**3E**	**3E**
	Wheels and Tires	**3F**	**3F**
DRIVE SHAFT AND PROPELLER SHAFT	Propeller Shafts	**4B**	**4B**
BRAKE SYSTEM	Brakes	**5**	**5**
	Antilock Brake System (ABS)	**5E**	**5E**
ENGINE	Engine General Information and Diagnosis (K9K Engine)	**6-2**	**6-2**
	Engine Mechanical (K9K Engine)	**6A2**	**6A2**
	Engine Cooling (K9K Engine)	**6B2**	**6B2**
	Engine Fuel (K9K Engine)	**6C2**	**6C2**
	Engine and Emission Control System (K9K Engine)	**6E2**	**6E2**
	Cranking System (K9K Engine)	**6G2**	**6G2**
	Charging System (K9K Engine)	**6H2**	**6H2**
	Exhaust System (K9K Engine)	**6K2**	**6K2**
TRANSMISSION, CLUTCH AND DIFFERENTIAL	Manual Transmission	**7A2**	**7A2**
	Clutch	**7C2**	**7C2**
	Transfer	**7D2**	**7D2**
	Front Differential	**7E**	**7E**
	Rear Differential	**7F**	**7F**
ELECTRICAL SYSTEM	Body Electrical System	**8**	**8**
	Immobilizer Control System	**8G2**	**8G2**
BODY SERVICE		**9**	**9**
RESTRAINT SYSTEM	Restraint System	**10**	**10**
	Air Bag System	**10B2**	**10B2**

NOTE:

For the screen toned sections in the above table, refer to the same section of the Related Manuals mentioned in FOREWORD of this manual.

SECTION 0A

GENERAL INFORMATION

NOTE:

For the items with asterisk (*) in the "CONTENTS" below, refer to the same section of the Service Manual mentioned in "FOREWORD" of this Manual.

CONTENTS

How to Use This Manual ..... *

Precautions 0A-2

Precaution for Vehicles Equipped with a Supplemental Restraint (Air Bag) System 0A-2

Diagnosis 0A-2

Servicing and handling 0A-3

General Precautions 0A-6

Precautions For Electrical Circuit Service ..... *

Electrical Circuit Inspection Procedure ..... *

Open circuit check ..... *

Short circuit check (wire harness to ground) ..... *

Intermittent and Poor Connection ..... *

Precaution For Installing Mobile Communication Equipment ..... *

Identification Information 0A-9

Vehicle Identification Number 0A-9

Engine Identification Number 0A-9

Warning, Caution and Information Labels 0A-10

Vehicle Lifting Points ..... *

When Using Frame Contact Hoist ..... *

When Using Floor Jack ..... *

Abbreviations May Be Used In This Manual 0A-11

Abbreviations 0A-11

Fasteners Information 0A-14

Metric Fasteners 0A-14

Fastener Strength Identification ..... *

Standard Tightening Torque ..... *

Precautions

Precaution for Vehicles Equipped with a Supplemental Restraint (Air Bag) System

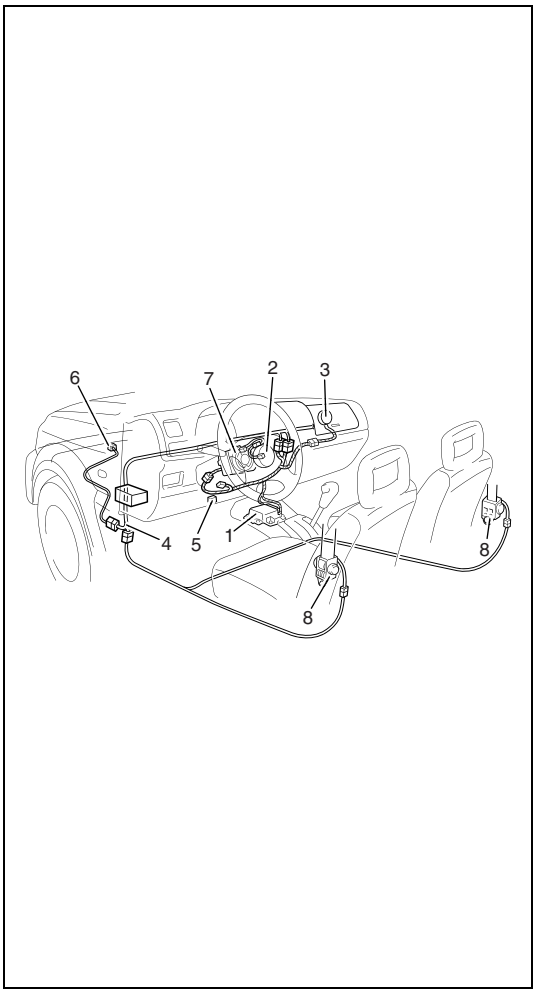

WARNING:

- **The configuration of air bag system parts are as shown in the figure. When it is necessary to service (remove, reinstall and inspect) these parts, be sure to follow procedures described in Section 10B. Failure to follow proper procedures could result in possible air bag system activation, personal injury, damage to parts or air bag system being unable to activate when necessary.**
- **If the air bag system and another vehicle system both need repair, SUZUKI recommends that the air bag system be repaired first, to help avoid unintended air bag system activation.**
- **Do not modify the steering wheel, dashboard, or any other air bag system components. Modifications can adversely affect air bag system performance and lead to injury.**
- **If the vehicle will be exposed to temperatures over 93°C (200°F) (for example, during a paint baking process), remove the air bag system components beforehand to avoid component damage or unintended air bag system activation.**

1. SDM	5. DLC
2. Driver air bag (inflator) module	6. Forward sensor
3. Passenger air bag (inflator) module	7. Contact coil
4. Air bag wire harness (in instrument panel wire harness, main wire harness and floor wire harness)	8. Seat belt pretensioner (if equipped)

Diagnosis

- When troubleshooting air bag system, be sure to follow “Air Bag Diagnostic System Check” in Section 10B. Bypassing these procedures may result in extended diagnostic time, incorrect diagnosis, and incorrect parts replacement.
- Never use electrical test equipment other than that specified in this manual.

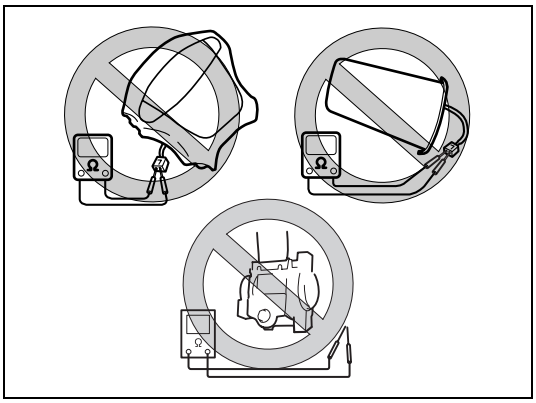

WARNING:

Never attempt to measure the resistance of the air bag (inflator) modules (driver and passenger) and seat belt pretensioners (driver and passenger). It is very dangerous as the electric current from the tester may deploy the air bag or activate the pretensioner.

Servicing and handling

[A]

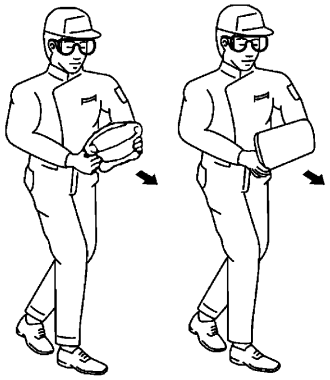

[B]

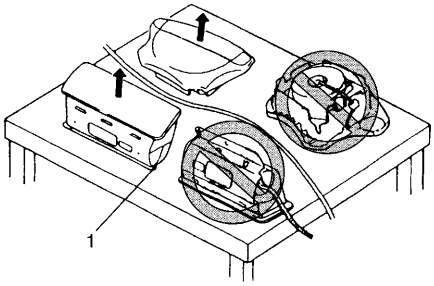

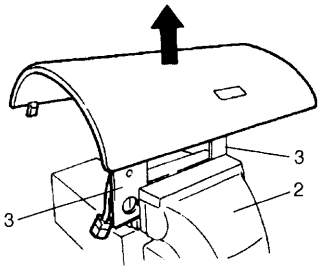

WARNING:

Many of service procedures require disconnection of "Air Bag" fuse and all air bag (inflator) module(s) from initiator circuit to avoid an accidental deployment.

Driver and Passenger Air Bag (Inflator) Modules

- **For handling and storage of a live air bag (inflator) module, select a place where the ambient temperature below 65°C (150°F), without high humidity and away from electric noise.**
- **When carrying a live air bag (inflator) module, make sure the bag opening is pointed away from you. In case of an accidental deployment, the bag will then deploy with minimal chance of injury. Never carry the air bag (inflator) module by the wires or connector on the underside of the module. When placing a live air bag (inflator) module on a bench or other surface, always face the bag up, away from the surface. As the live passenger air bag (inflator) module must be placed with its bag (trim cover) facing up, place it on the workbench with a slit (1) or use the workbench vise (2) to hold it securely at its lower mounting bracket (3). This is necessary so that a free space is provided to allow the air bag to expand in the unlikely event of accidental deployment. Otherwise, personal injury may result.**
- **Never dispose of live (undeployed) air bag (inflator) modules (driver and passenger). If disposal is necessary, be sure to deploy them according to deployment procedures described in Section 10B before disposal.**
- **The air bag (inflator) module immediately after deployment is very hot. Wait for at least half an hour to cool it off before proceeding the work.**
- **After an air bag (inflator) module has been deployed, the surface of the air bag may contain a powdery residue. This powder consists primarily of cornstarch (used to lubricate the bag as it inflates) and by-products of the chemical reaction. As with many service procedures, gloves and safety glasses should be worn.**

[A]:	Always Carry Air Bag (Inflator) Module With Trim Cover (Air Bag Opening) Away from Body.
[B]:	Always Place Air Bag (Inflator) Module On Workbench With Trim Cover (Air Bag Opening) Up, Away From Loose Objects.

WARNING:

SDM

- **During service procedures, be very careful when handling a Sensing and Diagnostic Module (SDM). Never strike or jar the SDM.**
  Never power up the air bag system when the SDM is not rigidly attached to the vehicle. All SDM and mounting bracket fasteners must be carefully torqued and the arrow must be pointing toward the front of the vehicle to ensure proper operation of the air bag system.
  The SDM could be activated when powered while not rigidly attached to the vehicle which could cause deployment and result in personal injury.

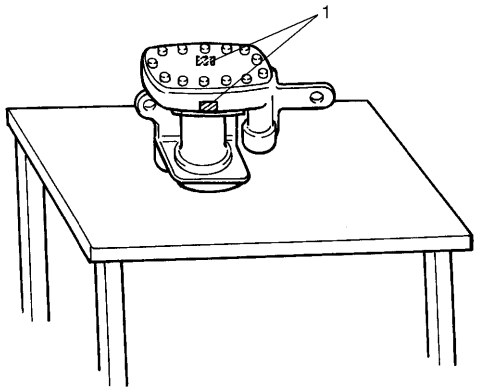

WARNING:

Driver and Passenger Seat Belt Pretensioners (If equipped)

- **For handling and storage of a live seat belt pretensioner, select a place where the ambient temperature below 65°C (150°F), without high humidity and away from electric noise.**
- **Never carry seat belt pretensioner by wire or connector of pretensioner. When placing a live seat belt pretensioner on the workbench or some place like that, be sure not to lay it with its exhaust hole (1) provided side facing down. It is also prohibited to put something on its face with an exhaust hole (1) or to put a seat belt pretensioner on top of another. Otherwise, personal injury may result.**
- **Never dispose of live (inactivated) seat belt pretensioners (driver and passenger). If disposal is necessary, be sure to activate them according to activation procedures described in Section 10B before disposal.**
- **The seat belt pretensioner immediately after activation is very hot. Wait for at least half an hour to cool it off before proceeding the work.**
- **With many service procedures, gloves and safety glasses should be worn to prevent any possible irritation of the skin or eyes.**

CAUTION:

- **Even when the accident was light enough not to cause air bags to activate, be sure to inspect system parts and other related parts according to instructions under "Repair and Inspection Required after an Accident" in Section 10B.**
- **When servicing parts other than air bag system, if shocks may be applied to air bag system component parts, remove those parts beforehand.**
- **When handling the air bag (inflator) modules (driver and passenger), seat belt pretensioners (driver and passenger), forward sensor or SDM, be careful not to drop it or apply an impact to it. If an excessive impact was applied (e.g., dropped from a height of 90 cm (3 feet) or more), never attempt disassembly or repair but replace it with a new one.**
- **When grease, cleaning agent, oil, water, etc. has got onto air bag (inflator) modules (driver and passenger) or seat belt pretensioners (drive and passenger), wipe off immediately with a dry cloth.**
- **Air bag wire harness can be identified easily as it is covered with a yellow protection tube. Be very careful when handling it.**
- **When an open in air bag wire harness, damaged wire harness, connector or terminal is found, replace wire harness, connectors and terminals as an assembly.**
- **Do not apply power to the air bag system unless all components are connected or a diagnostic chart requests it, as this will set a diagnostic trouble code.**
- **Never use air bag system component parts from another vehicle.**
- **When using electric welding, be sure to disconnect air bag (inflator) module connectors (driver and passenger) and seat belt pretensioner connectors (driver and passenger) respectively.**
- **Never expose air bag system component parts directly to hot air (drying or baking the vehicle after painting) or flames.**
- **WARNING / CAUTION labels are attached on each part of air bag system components. Be sure to follow the instructions.**
- **After vehicle is completely repaired, perform "Air Bag Diagnostic System Check" in Section 10B.**

General Precautions

The WARNING and CAUTION below describe some general precautions that you should observe when servicing a vehicle. These general precautions apply to many of the service procedures described in this manual, and they will not necessarily be repeated with each procedure to which they apply.

WARNING:

- **Whenever raising a vehicle for service, be sure to follow the instructions under "Vehicle Lifting Points" in this section.**
- **When it is necessary to do service work with the engine running, make sure that the parking brake is set fully and the transmission is in Neutral (for manual transmission vehicles) or Park (for automatic transmission vehicles), Keep hands, hair, clothing, tools, etc. away from the fan and belts when the engine is running.**
- **When it is necessary to run the engine indoors, make sure that the exhaust gas is forced outdoors.**
- **Do not perform service work in areas where combustible materials can come in contact with a hot exhaust system. When working with toxic or flammable materials (such as gasoline and refrigerant), make sure that the area you work in is well-ventilated.**
- **To avoid getting burned, keep away from hot metal parts such as the radiator, exhaust manifold, tailpipe, muffler, etc.**
- **New and used engine oil can be hazardous. Children and pets may be harmed by swallowing new or used oil. Keep new and used oil and used engine oil filters away from children and pets.**
  Continuous contact with used engine oil has been found to cause [skin] cancer in laboratory animals. Brief contact with used oil may irritate skin. To minimize your exposure to used engine oil, wear a long-sleeve shirt and moisture-proof gloves (such as dish washing gloves) when changing engine oil. If engine oil contacts your skin, wash thoroughly with soap and water. Launder any clothing or rags if wet with oil, recycle or properly dispose of used oil and filters.
- **Make sure the bonnet is fully closed and latched before driving. If it is not, it can fly up unexpectedly during driving, obstructing your view and resulting in an accident.**

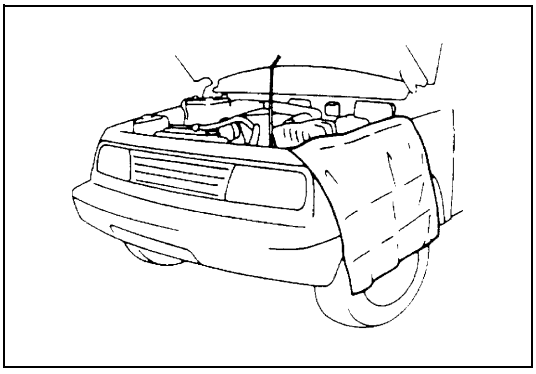

- **When washing vehicle, follow "washing" instruction described in owner's manual. Especially, to avoid damaging engine components, do not use pressurized water for cleaning in engine compartment.**
- **Before starting any service work, cover fenders, seats and any other parts that are likely to get scratched or stained during servicing. Also, be aware that what you wear (e.g, buttons) may cause damage to the vehicle's finish.**

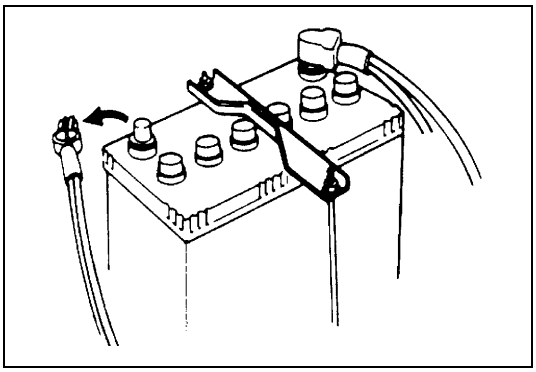

- **When performing service to electrical parts that does not require use of battery power, disconnect the negative cable of the battery.**
- **When disconnecting the battery negative cable, record displayed contents of clock and audio system before disconnecting and reset them as before after connecting.**

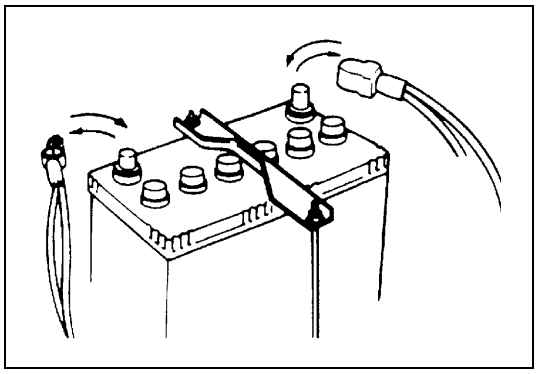

- **When removing the battery, be sure to disconnect the negative cable first and then the positive cable. When reconnecting the battery, connect the positive cable first and then the negative cable, and replace the terminal cover.**

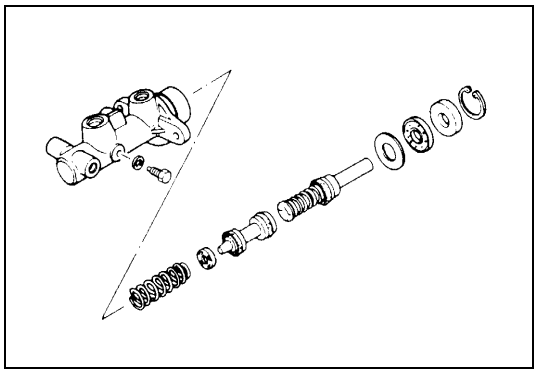

- **When removing parts that are to be reused, be sure to keep them arranged in an orderly manner so that they may be reinstalled in the proper order and position.**

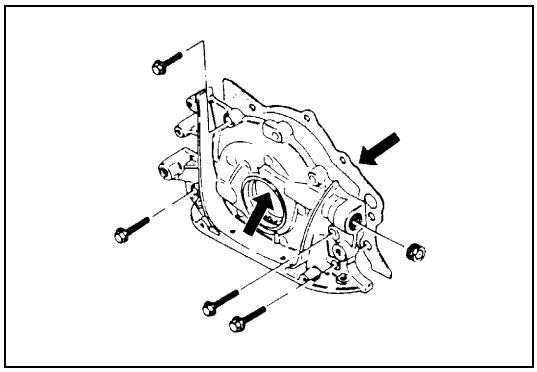

- **Whenever you use oil seals, gaskets, packing, O-rings, locking washers, split pins, self-locking nuts, and certain other parts as specified, be sure to use new ones. Also, before installing new gaskets, packing, etc., be sure to remove any residual material from the mating surfaces.**

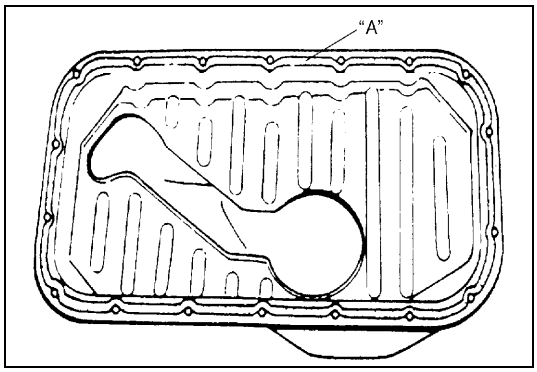

- **Make sure that all parts used in reassembly are perfectly clean.**
- **When use of a certain type of lubricant, bond or sealant is specified, be sure to use the specified type.**

"A": Sealant 99000-31250

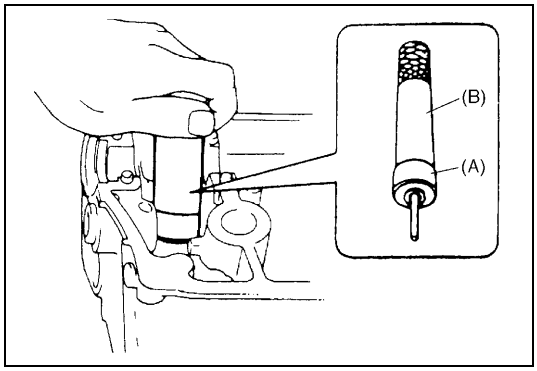

- **Be sure to use special tools when instructed.**

Special tool
(A): 09917-98221
(B): 09916-58210

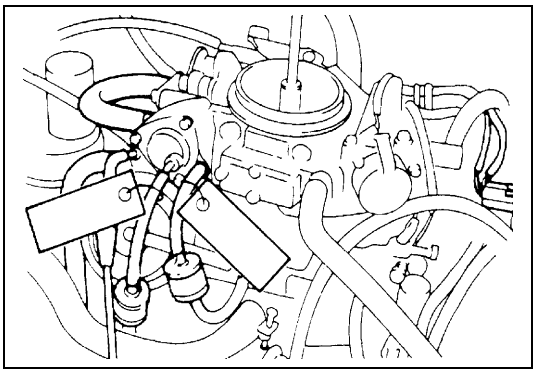

- **When disconnecting vacuum hoses, attach a tag describing the correct installation positions so that the hoses can be reinstalled correctly.**

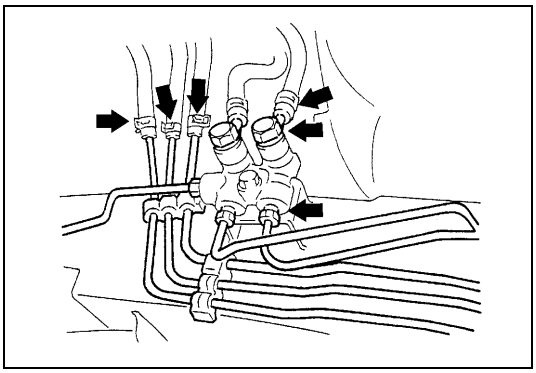

- **After servicing fuel, oil, coolant, vacuum, exhaust or brake systems, check all lines related to the system for leaks.**

- **For vehicles equipped with diesel engine, never disconnect fuel high-pressure line between injection pump and injectors under pressure, or fuel can be sprayed out under pressure.**
  Be sure to confirm that fuel high-pressure line is not under pressure referring to "Fuel pressure relief confirmation procedure" in section 6E2 before disconnecting. If it is under pressure, wait till it is not under pressure.

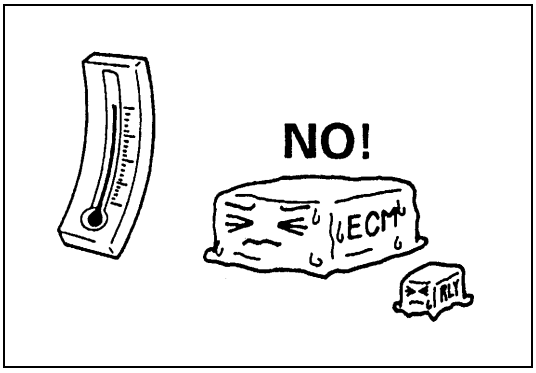

- **When performing a work that produces a heat exceeding 80°C (176°F) in the vicinity of the electrical parts, remove the heat sensitive electrical part(s) beforehand.**

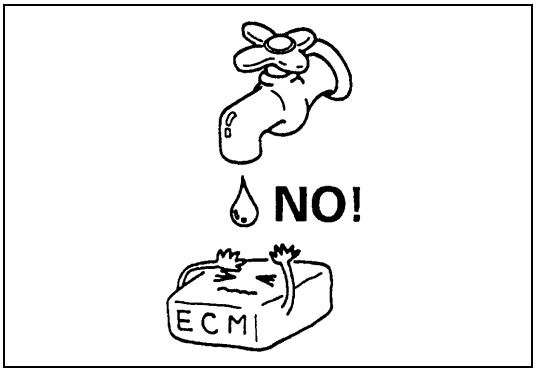

- **Use care not to expose connectors and electrical parts to water which will be a cause of a trouble.**

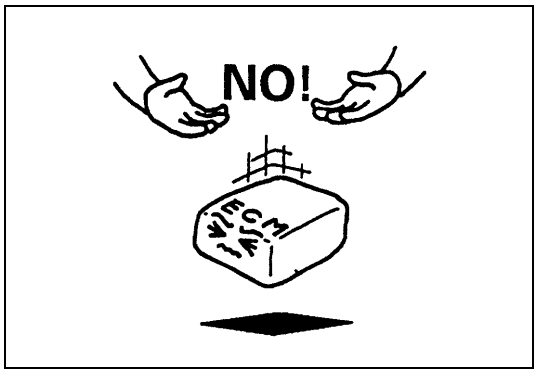

- **Always be careful not to handle electrical parts (computer, relay, etc.) in a rough manner or drop them.**

Identification Information

Vehicle Identification Number

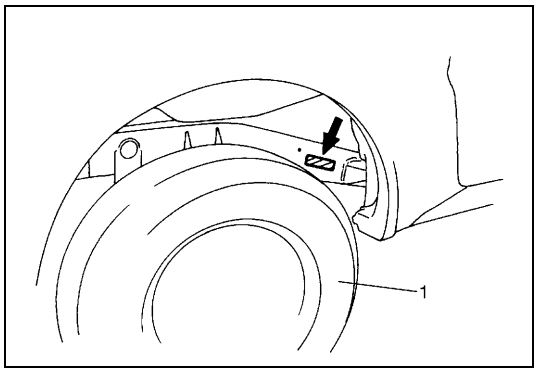

The vehicle identification number is punched on the chassis inside the tire housing on the right rear side and it is also on the left side of instrument panel depending on the vehicle specification.

1. Right rear tire

Engine Identification Number

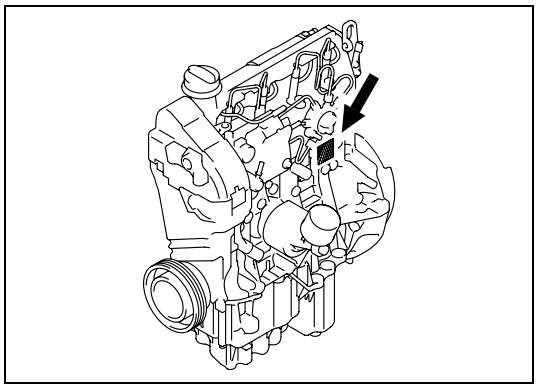

The number is punched on the cylinder block.

K9KXXXX
- Engine type (K9K engine)

XXXXXXX
- Serial number (Engine fabrication number)

Warning, Caution and Information Labels

The figure below shows main labels among others that are attached to vehicle component parts.
When servicing and handling parts, refer to WARNING / CAUTION instructions printed on labels.
If any WARNING / CAUTION label is found stained or damaged, clean or replace it as necessary.

NOTE:

Air bag CAUTION / WARNING labels are attached on the vehicle equipped with air bag system only.

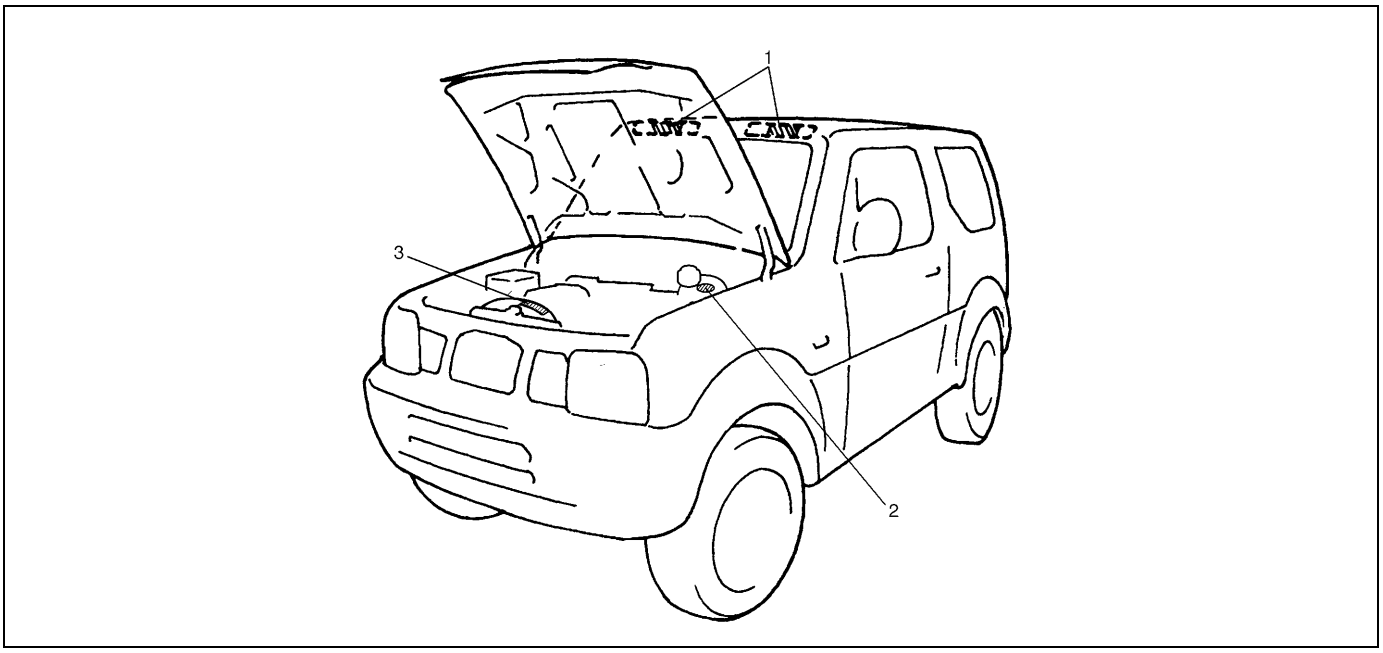

1. Air bag label on sun visor	3. Engine cooling fan label
2. Degassing tank cap label	

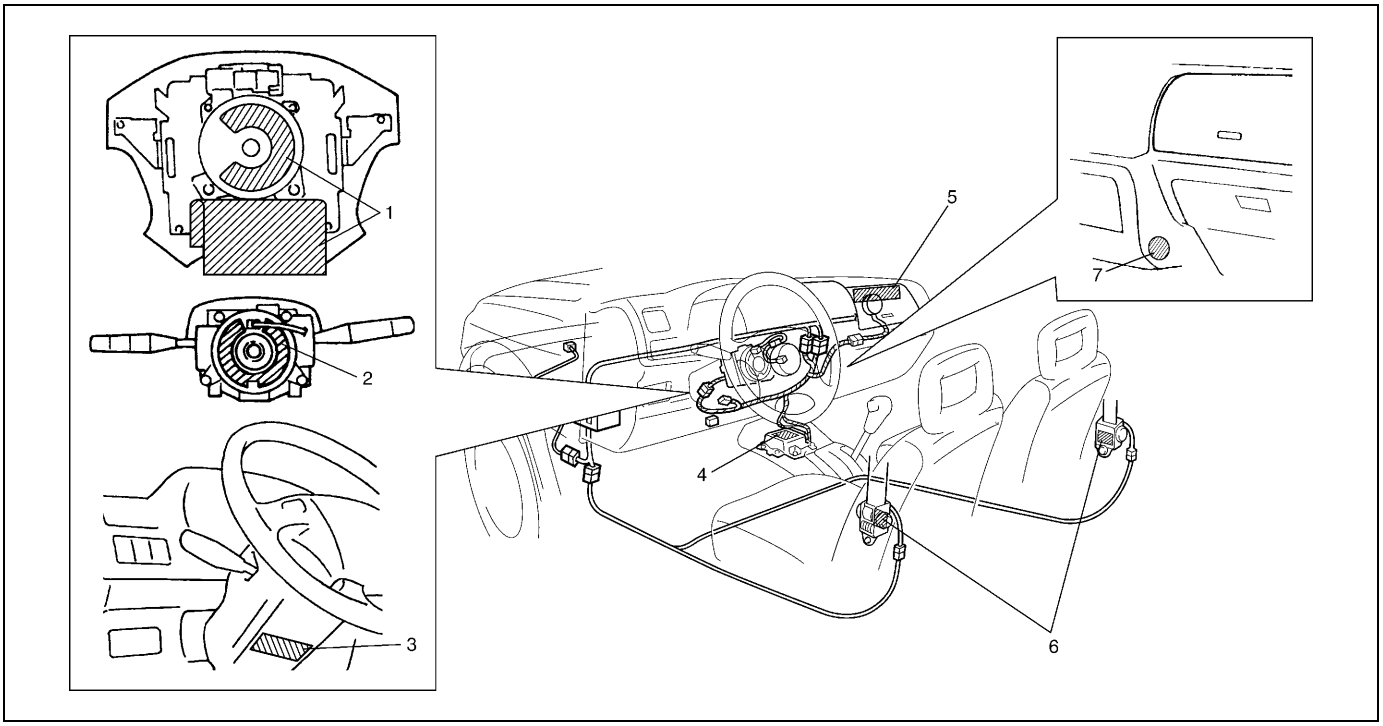

1. Air bag label on driver air bag (inflator) module	4. Air bag label on SDM	7. Child seat label (if equipped)
2. Air bag label on contact coil and combination switch assembly	5. Air bag label on passenger air bag (inflator) module	
3. Air bag label on steering column	6. Seat belt pretensioner label on retractor	

Abbreviations May Be Used In This Manual

Abbreviations

A	ABS	Anti-lock Brake System	E	EBCM	Electronic Brake Control Module, ABS Control Module
	ATDC	After Top Dead Center		EBD	Electronic Brake Force Distribution
	API	American Petroleum Institute		ECM	Engine Control Module
	ATF	Automatic Transmission Fluid		ECT Sensor	Engine Coolant Temperature Sensor (Water Temp. Sensor, WTS)
	ALR	Automatic Locking Retractor			
	AC	Alternating Current			
	A/T	Automatic Transmission			
	A/C	Air Conditioning		EGR	Exhaust Gas Recirculation
	ABDC	After Bottom Dead Center		EGRT Sensor	EGR Temperature Sensor (Recirculated Exhaust Gas Temp. Sensor, REGTS)
	A/F	Air Fuel Mixture Ratio			
	A-ELR	Automatic-Emergency Locking Retractor			
				EFE Heater	Early Fuel Evaporation Heater (Positive Temperature Coefficient, PTC Heater)
B	B+	Battery Positive Voltage		ELR	Emergency Locking Retractor
	BTDC	Before Top Dead Center		EPS	Electronic Power Steering
	BBDC	Before Bottom Dead Center		EVAP	Evaporative Emission
				EVAP Canister	Evaporative Emission Canister (Charcoal Canister)
C	CKT	Circuit	F	4WD	4 Wheel Drive
	CKP sensor	Crankshaft Position Sensor	G	GEN	Generator
	CMP Sensor	Camshaft Position Sensor (Crank Angle Sensor, CAS)		GND	Ground
	CO	Carbon Monoxide	H	HC	Hydrocarbons
	CPP Switch	Clutch Pedal Position Switch (Clutch Switch, Clutch Start Switch)		HO2S	Heated Oxygen Sensor
	CPU	Central Processing Unit			
	CRS	Child Restraint System			
D	DC	Direct Current	I	IAC Valve	Idle Air Control Valve (Idle Speed Control Solenoid Valve, ISC Solenoid Valve)
	DLC	Data Link Connector (Assembly Line Diag. Link, ALDL, Serial Data Link, SDL)		IAT Sensor	Intake Air Temperature Sensor (Air temperature Sensor, ATS)
	DOHC	Double Over Head Camshaft			
	DOJ	Double Offset Joint		ICM	Immobilizer Control Module
	DRL	Daytime Running Light		IG	Ignition
	DTC	Diagnostic Trouble Code (Diagnostic Code)		ISC Actuator	Idle Speed Control Actuator (Motor)

L	LH	Left Hand
	LSPV	Load Sensing Proportioning Valve
M	MAF Sensor	Mass Air Flow Sensor (Air Flow Sensor, AFS, Air Flow Meter, AFM)
	MAP Sensor	Manifold Absolute Pressure Sensor (Pressure Sensor, PS)
	Max	Maximum
	MFI	Multiport Fuel Injection (Multipoint Fuel Injection)
	Min	Minimum
	MIL	Malfunction Indicator Lamp (“CHECK ENGINE” Light)
	M/T	Manual Transmission
N	NOx	Nitrogen Oxides
O	OBD	On-Board Diagnostic System (Self-Diagnosis Function)
	O/D	Overdrive
	OHC	Over Head Camshaft
	O2S	Oxygen Sensor
P	PNP	Park/Neutral Position
	P/S	Power Steering
	PSP Switch	Power Steering Pressure Switch (P/S Pressure Switch)
	PCM	Powertrain Control Module
	PCV	Positive Crankcase Ventilation
	PPS	Pedal Position Sensor
R	RH	Right Hand
S	SAE	Society of Automotive Engineers
	SDM	Sensing and Diagnostic Module (Air bag controller, Air bag control module)
	SFI	Sequential Multiport Fuel Injection
	SOHC	Single Over Head Camshaft
	SOI	Start of Injection
T	TBI	Throttle Body Fuel Injection (Single-Point Fuel Injection, SPI)
	TCC	Torque Converter Clutch
	TCM	Transmission Control Module (A/T Controller, A/T Control Module)
	TP Sensor	Throttle Position Sensor
	TVV	Thermal Vacuum Valve (Thermal Vacuum Switching Valve, TVSV, Bimetal Vacuum Switching Valve, BVSV)
	TWC	Three Way Catalytic Converter (Three Way Catalyst)
	2WD	2 Wheel Drive
V	VIN	Vehicle Identification Number
	VSS	Vehicle Speed Sensor
	VVT	Variable Valve Timing
W	WU-OC	Warm Up Oxidation Catalytic Converter
	WU-TWC	Warm Up Three Way Catalytic Converter

Symbols

SYMBOL	DEFINITION	SYMBOL	DEFINITION
	Tightening torque	1216B	Apply SUZUKI BOND NO. 1216B 99000-31230
OIL	Apply oil (engine, transmission, transfer, differential)	Si	Apply SILICONE SEALANT 99000-31120
FLD	Apply fluid (brake, power steering or automatic transmission fluid)	366E	Apply SEALING COMPOUND 366E 99000-31090
A	Apply SUZUKI SUPER GREASE A 99000-25010		
C	Apply SUZUKI SUPER GREASE C 99000-25030	1322	Apply THREAD LOCK 1322 99000-32110
E	Apply SUZUKI SUPER GREASE E 99000-25050	1333B	Apply THREAD LOCK 1333B 99000-32020
H	Apply SUZUKI SUPER GREASE H 99000-25120	1342	Apply THREAD LOCK 1342 99000-32050
I	Apply SUZUKI SUPER GREASE I 99000-25210		
1215	Apply SUZUKI BOND NO. 1215 99000-31110		Do not reuse.
1207F	Apply SUZUKI BOND NO. 1207F 99000-31250		Note on reassembly

Wire Color Symbols

Symbol		Wire Color	Symbol		Wire Color
B	BLK	Black	O, Or	ORN	Orange
Bl	BLU	Blue	R	RED	Red
Br	BRN	Brown	W	WHT	White
G	GRN	Green	Y	YEL	Yellow
Gr	GRY	Gray	P	PNK	Pink
Lbl	LT BLU	Light blue	V	PPL	Violet
Lg	LT GRN	Light green			

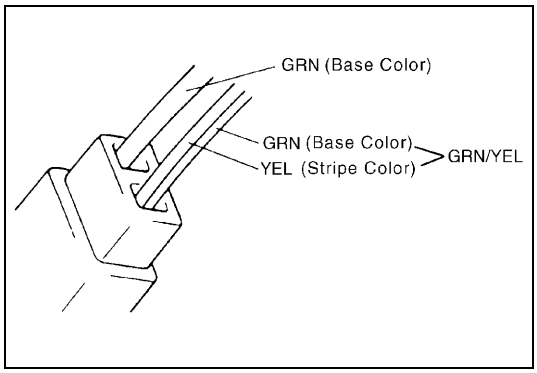

There are two kinds of colored wire used in this vehicle. One is single-colored wire and the other is dual-colored (striped) wire.
The single-colored wire uses only one color symbol (i.e. “GRN”).
The dual-colored wire uses two color symbols (i.e. “GRN/YEL”).
The first symbol represents the base color of the wire (“GRN” in the figure) and the second symbol represents the color of the stripe (“YEL” in the figure).

Fasteners Information

Metric Fasteners

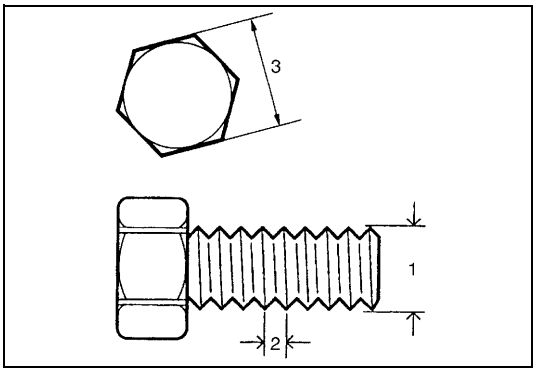

Most of the fasteners used for this vehicle are JIS-defined and ISO-defined metric fasteners. When replacing any fasteners, it is most important that replacement fasteners be the correct diameter, thread pitch and strength.

CAUTION:

Even when the nominal diameter (1) of thread is the same, the thread pitch (2) or the width across flats (3) may vary between ISO and JIS. Refer to JIS-TO-ISO Main Fasteners Comparison Table below for the difference.

Installing a mismatched bolt or nut will cause damage to the thread.

Before installing, check the thread pitch for correct matching and then tighten it by hand temporarily. If it is tight, recheck the thread pitch.

JIS-TO-ISO Main Fasteners Comparison Table

		Nominal diameter				
		M6	M8	M10	M12	M14
JIS	Thread pitch	1.0	1.25	1.25	1.25	1.5
	Width across flats	10	12	14	17	19
ISO	Thread pitch	1.0	1.25	1.5	1.5	1.5
	Width across flats	10	13	16	18	21

SECTION 0B

MAINTENANCE AND LUBRICATION

WARNING:

For vehicles equipped with a Supplemental Restraint (Air Bag) System:

- **Service on and around the air bag system components or wiring must be performed only by an authorized SUZUKI dealer. Refer to "Air Bag System Components and Wiring Location View" under "General Description" in air bag system section in order to confirm whether you are performing service on or near the air bag system components or wiring. Please observe all WARNINGS and "Service Precautions" under "On-Vehicle Service" in air bag system section before performing service on or around the air bag system components or wiring. Failure to follow WARNINGS could result in unintentional activation of the system or could render the system inoperative. Either of these two conditions may result in severe injury.**
- **Technical service work must be started at least 90 seconds after the ignition switch is turned to the "LOCK" position and the negative cable is disconnected from the battery. Otherwise, the system may be activated by reserve energy in the Sensing and Diagnostic Module (SDM).**

NOTE:

For the items with asterisk (*) in the "CONTENTS" below, refer to the same section of the Service Manual mentioned in "FOREWORD" of this Manual.

CONTENTS

Maintenance Schedule 0B-2
Maintenance Schedule Under Normal Driving Conditions 0B-2
Maintenance Recommended Under Severe Driving Conditions 0B-3
Maintenance Service 0B-4
Engine 0B-4
Drive belt 0B-4
Camshaft timing belt and tensioner 0B-4
Engine oil and filter 0B-5
Engine coolant 0B-6
Exhaust system 0B-7
Fuel System 0B-7
Air cleaner filter 0B-7
Fuel lines and connections 0B-8
Fuel filter 0B-8
Water Draining of Fuel Filter 0B-8
Fuel tank 0B-8
Chassis and Body 0B-9
Clutch 0B-9
Brake discs and pads 0B-9
Brake drums and shoes ..... *
Brake hoses and pipes ..... *
Brake fluid ..... *
Parking brake lever and cable ..... *
Tires/wheels ..... *
Suspension system ..... *
Propeller shafts ..... *
Manual transmission oil 0B-10
Transfer and differential oil 0B-10
Steering system ..... *
Steering knuckle seal ..... *
Power steering (P/S) system (if equipped) 0B-11
All hinges, latches and locks ..... *
Final Inspection ..... *
Recommended Fluids and Lubricants 0B-11

Maintenance Schedule

Maintenance Schedule Under Normal Driving Conditions

NOTE:

- **This interval should be judged by odometer reading or months, whichever comes first.**
- **This table includes service as scheduled up to 90,000 km (54,000 miles) mileage. Beyond 90,000 km (54,000 miles), carry out the same services at the same intervals respectively.**

Interval							
	Km (x 1,000)	15	30	45	60	75	90
	Miles (x 1,000)	9	18	27	36	45	54
	Months	12	24	36	48	60	72
ENGINE							
Engine accessory drive belt		–	–	–	–	R	–
Camshaft timing belt and tensioner		–	–	–	–	R	–
Engine oil and oil filter *1		R	R	R	R	R	R
Engine coolant		–	R	–	R	–	R
Exhaust system		–	I	–	I	–	I
FUEL SYSTEM							
Air cleaner filter		I	I	R	I	I	R
Fuel lines and connections		–	I	–	I	–	I
Fuel filter		–	–	R	–	–	R
		Drain water every 15,000 km or 9,000 miles					
Fuel tank		–	–	I	–	–	I
CHASSIS AND BODY							
Clutch (fluid leakage, level)		–	I	–	I	–	I
Brake discs and pads (thickness, wear, damage)		I	I	I	I	I	I
Brake drums and shoes (wear, damage)		–	I	–	I	–	I
Brake hoses and pipes (leakage, damage, clamp)		–	I	–	I	–	I
Brake fluid		–	R	–	R	–	R
Brake lever and cable (damage, stroke, operation)		Inspect at first 15,000 km (9,000 miles) only.					
Tires (wear, damage, rotation)		I	I	I	I	I	I
Wheel discs (damage)		I	I	I	I	I	I
Suspension system (tightness, damage, rattle, breakage)		–	I	–	I	–	I
Propeller shafts		–	–	I	–	–	I
Manual transmission oil (leakage, level) (I: 1st 15,000 km only)		I	–	R	–	–	R
Transfer oil (leakage, level)		I	–	I	–	I	–
Differential oil (leakage, level) (R: 1st 15,000 km only)		R or I	–	I	–	I	–
Steering system (tightness, damage, breakage, rattle)		–	I	–	I	–	I
Power steering (if equipped)		I	I	I	I	I	I
All latches, hinges and locks		–	I	–	I	–	I

NOTE:

"R": Replace or change

"I": Inspect and correct, replace or lubricate if necessary

- **Some maintenance items are required to be serviced at times other than the regular maintenance times shown at the top of above table. These items can be serviced at an earlier service opportunity according to customer's maintenance convenience. Their next maintenance service should be done within the specified period.**
- ***1: Inspect every 2,000 km (1,200 miles) until mileage of 5,000 km(3,000 miles)**

Maintenance Recommended Under Severe Driving Conditions

If the vehicle is usually used under the conditions corresponding to any severe condition code given below, it is recommended that applicable maintenance operation be performed at the particular interval as shown in the following table.

Severe condition code

A : Repeated short trips
B : Driving on rough and/or muddy roads
C : Driving on dusty roads
D : Driving in extremely cold weather and/or salted roads
E : Repeated short trips in extremely cold weather
F : Leaded fuel use
G : – – – – –
H: Trailer towing (if admitted)

Severe Condition Code	Maintenance	Maintenance Operation	Maintenance Interval
– B C D – – – –	Engine accessory drive belt	I	Every 15,000 km (9,000 miles) or 12 months
		R	Every 45,000 km (27,000 miles) or 36 months
A – C D E – – H	Engine oil and oil filter	R	Every 5,000 km (3,000 miles) or 4 months
– B – – – – – –	Exhaust pipe mountings	I	Every 15,000 km (9,000 miles) or 12 months
– – C – – – – –	Air cleaner filter *1	I	Every 2,500 km (1,500 miles)
		R	Every 30,000 km (18,000 miles) or 24 months
– B C D – – – H	Wheel bearing	I	Every 15,000 km (9,000 miles) or 12 months
– B – – – – – –	Suspension bolts and nuts	T	Every 15,000 km (9,000 miles) or 12 months
– B – D E – – H	Propeller shafts	I	Every 15,000 km (9,000 miles) or 12 months
– B – – E – – H	Manual transmission, transfer and differential oil	R	First time only: 15,000 km (9,000 miles) or 12 months
			Second time and after: Every 30,000 km (18,000 miles) or 24 months reckoning from 0 km (0 mile) or 0 month
– B C D – – – –	Steering knuckle seal	I	Every 15,000 km (9,000 miles) or 12 months

NOTE:

- **"I": Inspect and correct, replace or lubricate if necessary**
- **"R": Replace or change**
- **"T": Tighten to the specified torque**
- ***1: Inspect or replace more frequently if necessary**

Maintenance Service

Engine

Drive belt

WARNING:
All inspection and replacement are to be performed with ENGINE NOT RUNNING.

Engine Accessory Drive Belt Inspection

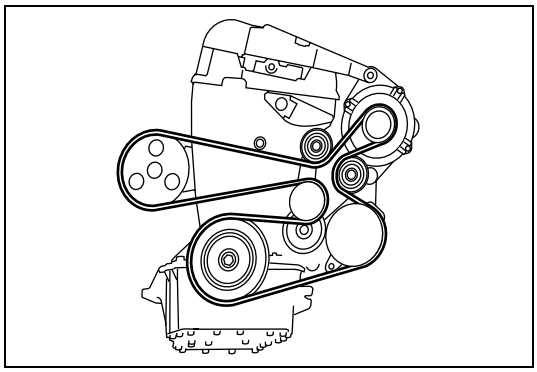

Inspect belt for cracks, cuts, deformation, wear, tension and cleanliness referring to “Generator Drive Belt Inspection” in Section 6H2. If any defect exists, replace.

Replacement

Replace belt with new one referring to “Generator Drive Belt Removal and Installation” in Section 6H2.

Camshaft timing belt and tensioner

Replacement

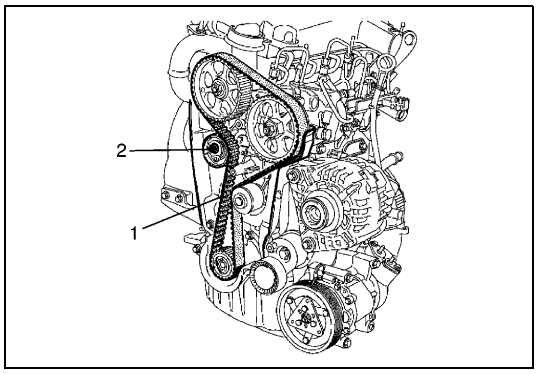

Replace camshaft timing belt (1) and tensioner (2) with new ones referring to “Timing Belt and Belt Tensioner Removal and Installation” in Section 6A2.

Engine oil and filter

Change

WARNING:
- **New and used engine oil can be hazardous. Be sure to read "WARNING" in General Precaution in Section 0A and observe what in written there.**
- **Step 1) – 7) outlined below must be performed with ENGINE NOT RUNNING. For step 8), be sure to have adequate ventilation while engine is running.**

Before draining engine oil, check engine for oil leakage. If any evidence of leakage is found, make sure to correct defective part before proceeding to the following work.

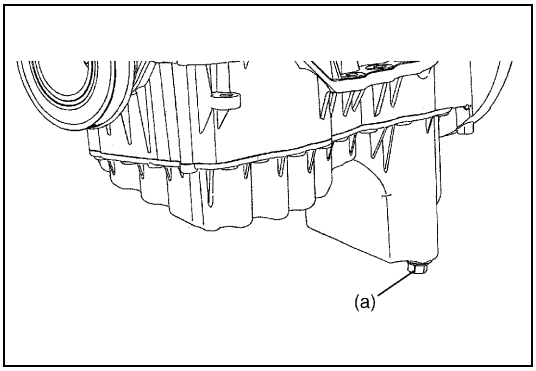

1) Drain engine oil by removing drain plug.
2) After draining oil, wipe drain plug clean. Reinstall drain plug, and tighten it securely as specified below.

Tightening torque
(a): 35 N·m (3.5 kg-m, 25.5 lb-ft)

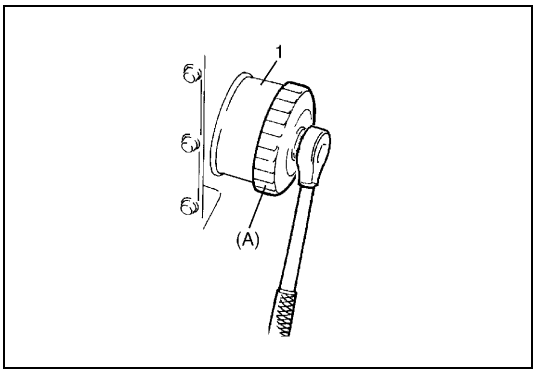

3) Loosen oil filter (1) by using oil filter wrench (special tool).

Special tool
(A): 09915-46510

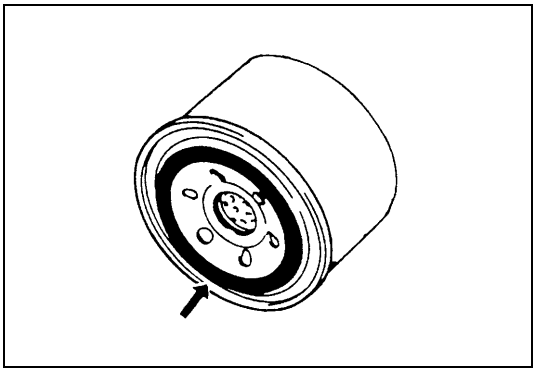

NOTE:

Before fitting new oil filter, be sure to oil its O-ring. Use engine oil for this purpose.

4) Screw new filter on oil filter stand by hand until the filter O-ring contacts the mounting surface.

CAUTION:

To tighten oil filter properly, it is important to accurately identify the position at which filter O-ring first contacts the mounting surface.

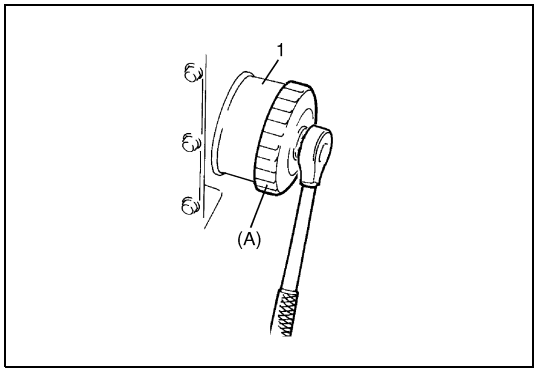

5) Tighten the filter (1) 3/4 turn from the point of contact with the mounting surface using an oil filter wrench (special tool).

Special tool
(A): 09915-46510

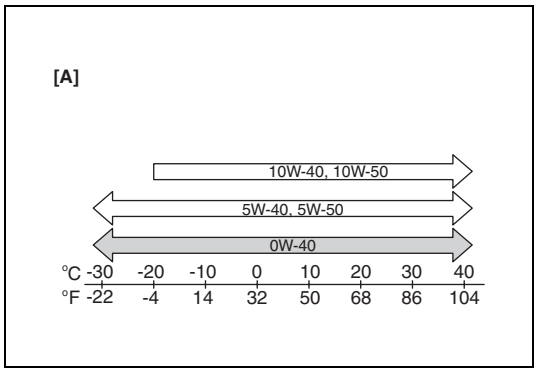

6) Replenish oil until oil level is brought to FULL level mark on dipstick. (about 4.0 liters (7.0 Imp pt.)). The filler inlet is at the top of the cylinder head cover.
Use engine oil of ACEA standard B3/B4 grade.
Select the appropriate oil viscosity according to the proper engine oil viscosity chart [A].
However, it is recommended to use 0W-40 oil under ambient temperatures below –15 °C (5 °F)

NOTE:

Note that the amount of oil required when actually changing oil may somewhat differ from the data depending on various conditions (temperature, viscosity, etc.)

7) Check oil filter and drain plug for oil leakage.

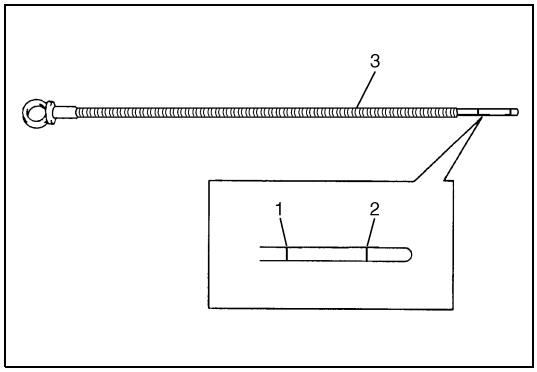

8) Start engine and run it for three minutes. Stop it and wait five minutes before checking oil level. Add oil, as necessary, to bring oil level to FULL level mark (1) on oil level gauge (3).

2. Low level mark

Inspection

1) Check engine for oil leakage. If any evidence of leakage is found, repair defective part.
2) Check engine oil for level according to step 8) of “Engine Oil and filter change” in this section.

Engine coolant

Change

Change engine coolant referring to “Cooling System Flush and Refill” in Section 6B2.

Exhaust system

Inspection

WARNING:
To avoid danger of being burned, do not touch exhaust system when it is still hot. Any service on exhaust system should be performed when it is cool.

Check exhaust system for loose, damage, deterioration, leakage, etc. referring to “Maintenance” in Section 6K2.

Fuel System

Air cleaner filter

Inspection

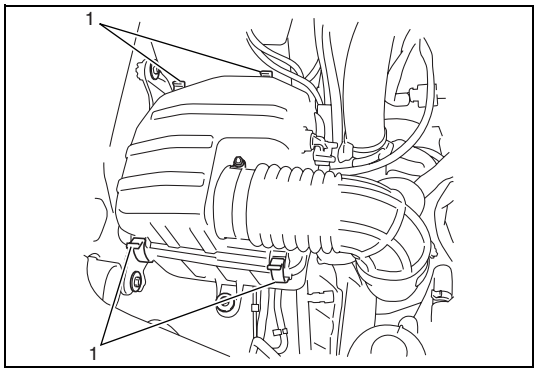

1) Remove air cleaner case clamps (1).
2) Take cleaner filter out of air cleaner case.

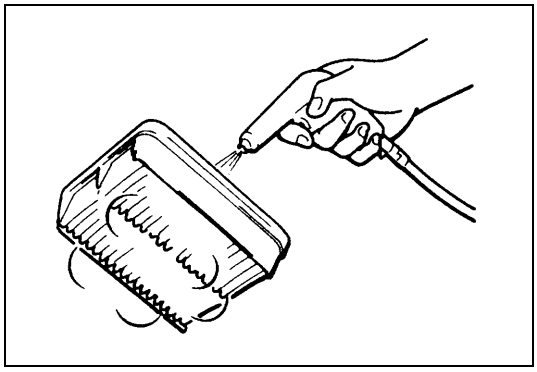

3) Check air cleaner filter for dirt. Replace excessively dirty filter.
4) Blow off dust by compressed air from air outlet side of filter.
5) Install air cleaner filter into case.
6) Install air cleaner case cap and clamp it securely.

Replacement

Replace air cleaner filter with new one according to steps 1), 2) and 5), 6) of inspection procedure.

Fuel lines and connections

Inspection

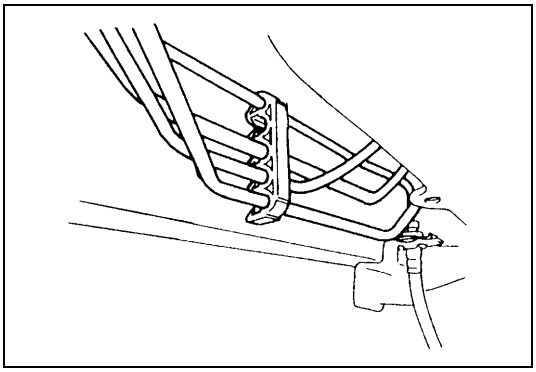

1) Visually inspect fuel lines and connections for evidence of fuel leakage, hose cracking and damage. Make sure all clamps are secure.
   Repair leaky joints, if any.
   Replace hoses that are suspected of being cracked.

Fuel filter

Replacement

WARNING:
This work must be performed in a well ventilated area and away from any open flames (such as gas hot water heaters).

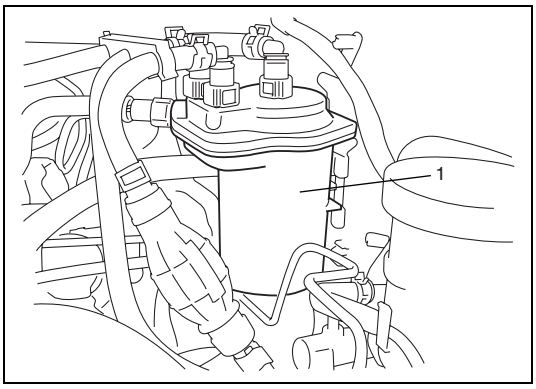

Replace fuel filter (1) with new one periodically, referring to “Fuel Filter Removal and Installation” in Section 6C2.

Water Draining of Fuel Filter

Bleed fuel filter of water referring to “Water Draining of Fuel Filter” in Section 6C2.

Fuel tank

Inspection

Check fuel tank for damage, cracks, fuel leakage, corrosion and tank bolts looseness.
If a problem is found, repair or replace.

Chassis and Body

Clutch

Inspection

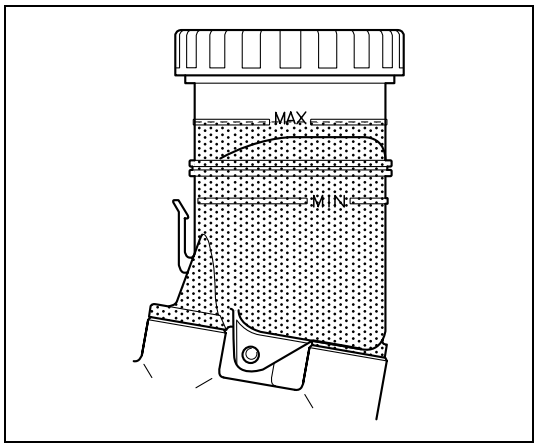

1) Check system for evidence of fluid leakage.
   Repair leaky point if any.
2) Check reservoir for fluid level referring to “Fluid Level Check” in Section 7C2.

Brake discs and pads

Inspection

1) Remove wheel and caliper but don’t disconnect brake hose from caliper.

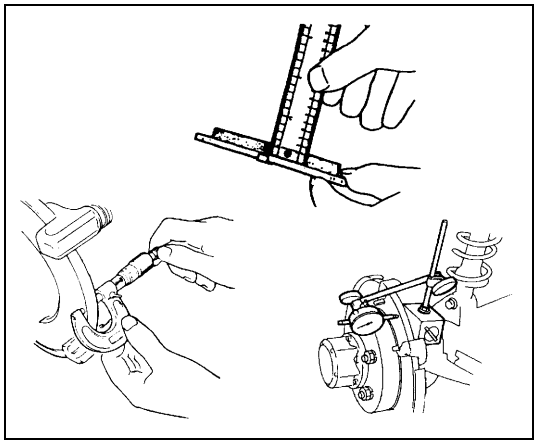

2) Check front disc brake pads and discs for excessive wear, damage and deflection. Replace parts as necessary. For details, refer to “Brake Pad” and “Brake Disc” in Section 5.
   Be sure to torque caliper pin bolts to specification.

Manual transmission oil

Inspection

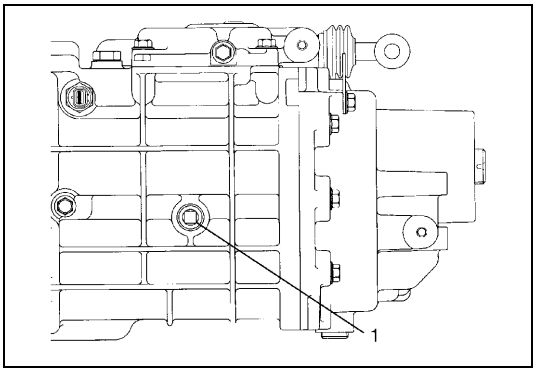

1) Inspect transmission case for evidence of oil leakage.
   Repair leaky point if any.
2) Make sure that vehicle is placed level for oil level check.
3) Remove level plug (1) of transmission.
4) Check oil level.
   Oil level can be checked roughly by means of level plug hole. That is, if oil flows out of level plug hole or if oil level is found up to hole when level plug is removed, oil is properly filled.
   If oil is found insufficient, pour specified amount of specified oil.
5) Tighten level plug to specified torque.
   Refer to “Manual Transmission Oil Change” in Section 7A2 for installation and tightening torque.

Change

Change transmission oil with new specified oil referring to “Manual Transmission Oil Change” in Section 7A2.

Transfer and differential oil

Inspection

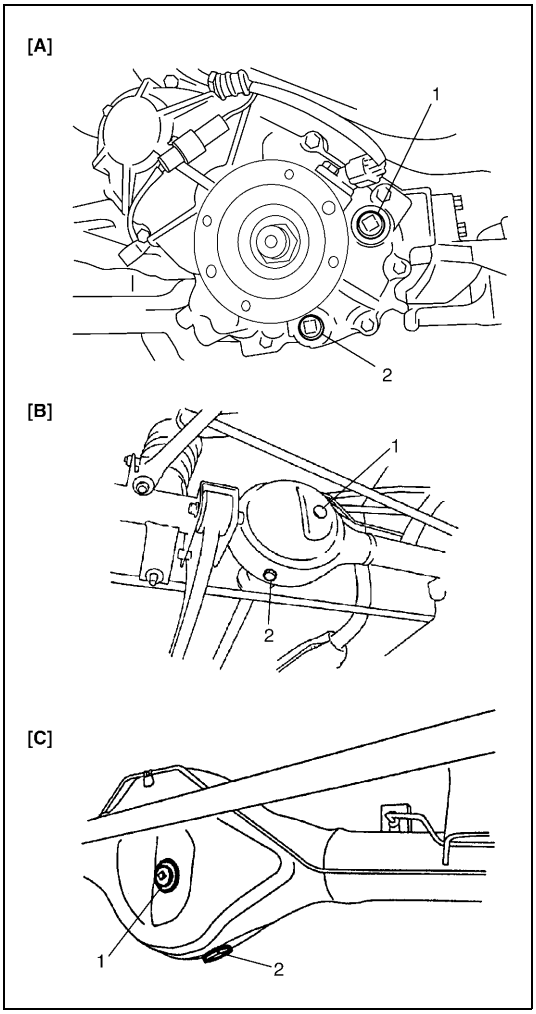

1) Check transfer case and differential for evidence of oil leakage.
   Repair leaky point if any.
2) Make sure that vehicle is placed level for oil level check.
3) Remove level plug (1) of transfer and differentials (front and rear) and check oil level.
   Oil level can be checked roughly by means of level plug hole. That is, if oil flows out of level plug hole or if oil level is found up to hole when level plug is removed, oil is properly filled.
   If oil is found insufficient, pour specified amount of specified oil.

[A]:	Transfer
[B]:	Front differential
[C]:	Rear differential
2.	Drain plug (Apply sealant)

CAUTION:
Hypoid gear oil must be used for differential.

4) Tighten level plug to specified torque.
   Refer to “Transfer Oil Change” in Section 7D2 and “Oil Change” in Section 7E or 7F for tightening torque.

Change

Change transfer oil and differentials oil with new specified oil referring to “Transfer Oil Change” in Section 7D2 and “Oil Change” in Section 7E or 7F.

Power steering (P/S) system (if equipped)

Inspection

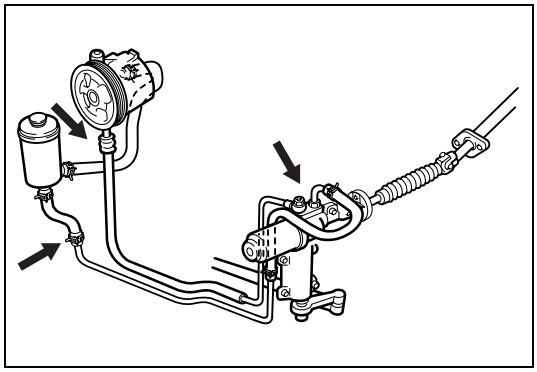

1) Visually check power steering system for fluid leakage and hose for damage and deterioration.
   Repair or replace defective parts, if any.

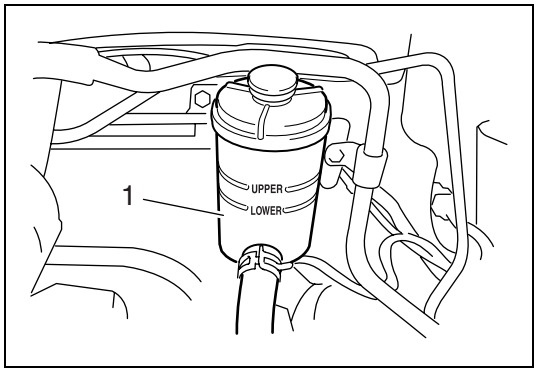

2) With engine stopped, check fluid level indicated on fluid tank (1), which should be between "UPPER" and "LOWER" marks. If it is lower than "LOWER", fill fluid up to "UPPER" mark.

NOTE:

- **Be sure to use an equivalent of DEXRON®-II, DEXRON®-IIE or DEXRON®-III for P/S fluid.**
- **Fluid level should be checked when fluid is cool.**

3) Visually check pump drive belt for cracks and wear.
4) Check belt for tension, referring to "Drive Belt" in this section. If necessary, have belt adjusted or replaced.

Recommended Fluids and Lubricants

Engine oil	Refer to "Engine Oil and Oil Filter" in this section for engine oil grade and viscosity.
Engine coolant (Ethylene glycol base coolant)	"Antifreeze/Anticorrosion coolant"
Brake fluid	DOT 3
Manual transmission oil	Refer to "Manual Transmission Oil Change" in Section 7A2.
Transfer oil	Refer to "Transfer Oil Change" in Section 7D2.
Differential oil (front & rear)	Refer to "Oil Change" in Section 7E and 7F.
Power steering fluid	An equivalent of DEXRON®-II, DEXRON®-IIE or DEXRON®-III
Steering knuckle seal	Water resistance chassis grease (SUZUKI SUPER GREASE A 99000-25010)
Door hinges	Engine oil or water resistance chassis grease
Hood latch assembly	
Key lock cylinder	Spray lubricant

SECTION 1A

HEATER AND VENTILATION

WARNING:

For vehicles equipped with a Supplement Restraint (Air Bag) System

- **Service on and around the air bag system components or wiring must be performed only by an authorized SUZUKI dealer. Refer to "Air Bag System Components and Wiring Location View" under "General Description" in Section 10B in order to confirm whether you are performing service on or near the air bag system components or wiring. Please observe all WARNINGS and "Service Precautions" under "On-Vehicle Service" in Section 10B before performing service on or around the air bag system components or wiring. Failure to follow WARNINGS could result in unintentional activation of the system or could render the system inoperative. Either or these two conditions may result in severe injury.**
- **Technical service work must be started at least 90 seconds after the ignition switch is turned to the "LOCK" position and the negative cable is disconnected from the battery. Otherwise, the system may be activated by reserve energy in the Sensing and Diagnostic Module (SDM).**

NOTE:

For the items with asterisk (*) the "CONTENTS" below, refer to the same section of the Service Manual mentioned in "FOREWORD" of this manual.

CONTENTS

General Description 1A-2
Additional Heater Assembly 1A-3
Diagnosis 1A-4
Diagnosis Table 1A-4
Wiring Circuit 1A-5
On Vehicle Service 1A-6
Heater Blower Motor ..... *
Heater Blower Resistor ..... *
Heater Control Lever Assembly ..... *
Heater Blower Fan Switch ..... *
Heater Unit/Boost Ventilation 1A-6
Additional Heater Assembly 1A-7
Additional Heater Relays 1A-9

General Description

The heater, an in and out air selectable-type hot water heater, is so constructed that it is possible to assure an agreeable ventilation at all times by providing the ventilator air outlets at the center and both sides (right and left) of the instrument panel, the hot air outlet at a place close to the feet of front passengers, and the defroster air outlets at places, right and left, along the windshield glass.

The heater and ventilation consist of following parts.

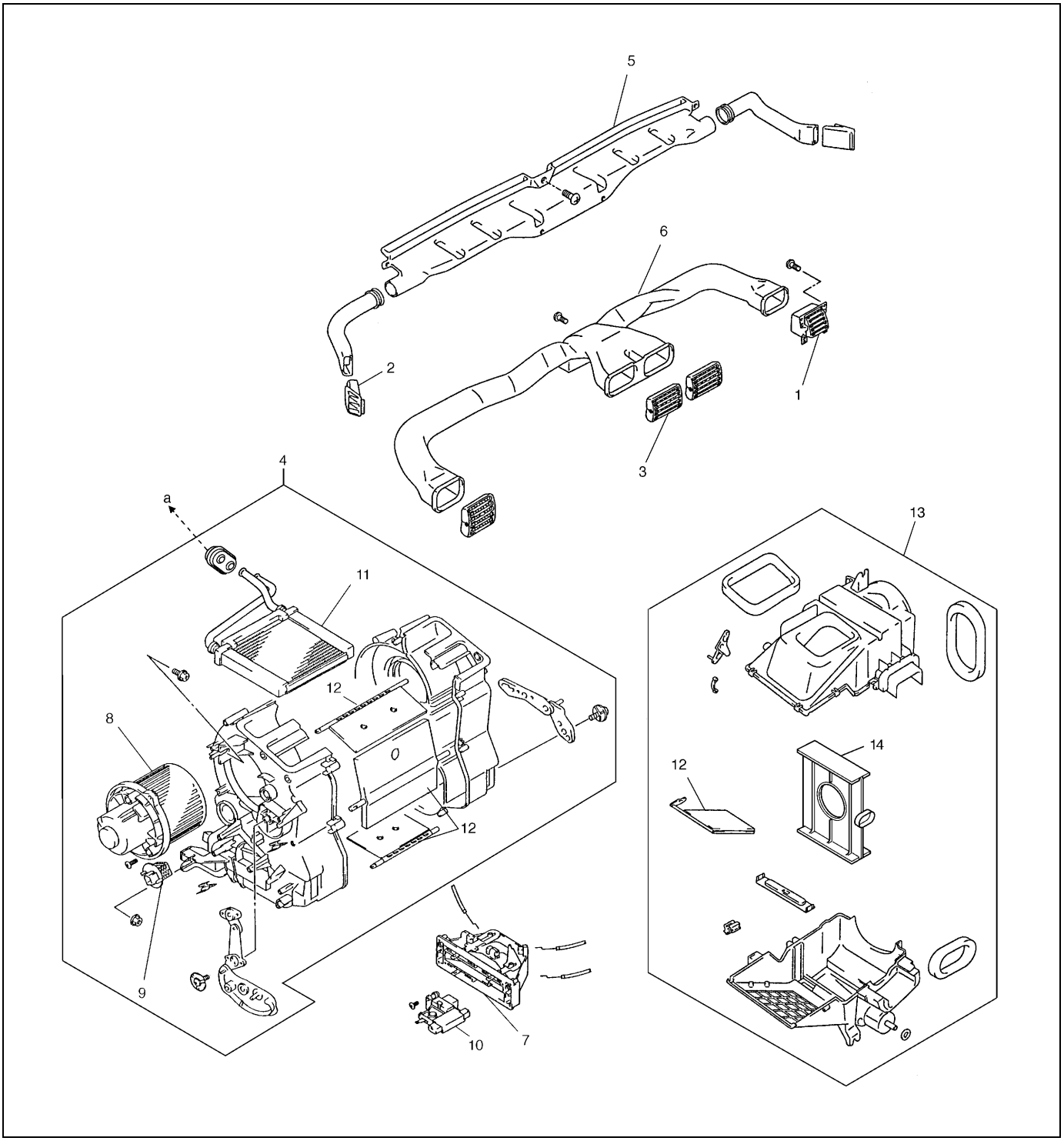

1. Side ventilator outlet	6. Ventilator duct	11. Heater core
2. Side defroster outlet	7. Control lever	12. Air damper
3. Center ventilator outlet	8. Heater blower motor	13. Air inlet box
4. Heater unit	9. Heater blower resistor	14. Air resistance board
5. Defroster duct	10. Heater blower fan switch	a. To additional heater assembly

Additional Heater Assembly

The heat of the engine coolant is used to warm up air through the heater core so that the warmed air is blown into the inside of the vehicle. The engine coolant temperature increases slower in diesel engine; therefore, air through the heater core cannot be warmed up sufficiently.

To improve the warming performance, the vehicle is equipped with the additional heater assembly (1). After its activation by ECM, the engine coolant is warmed up additionally and more heat is added to air through the heater core. It is not activated during pre/post heating by glow plug. Not during pre/post heating by glow plug, it is activated on the following conditions.

- Ten seconds have passed after the engine start.
- The battery voltage is more than 12.2 V.
- The engine speed is more than 700 rpm.
- The engine coolant and the intake air temperature is as shown in the graph below.

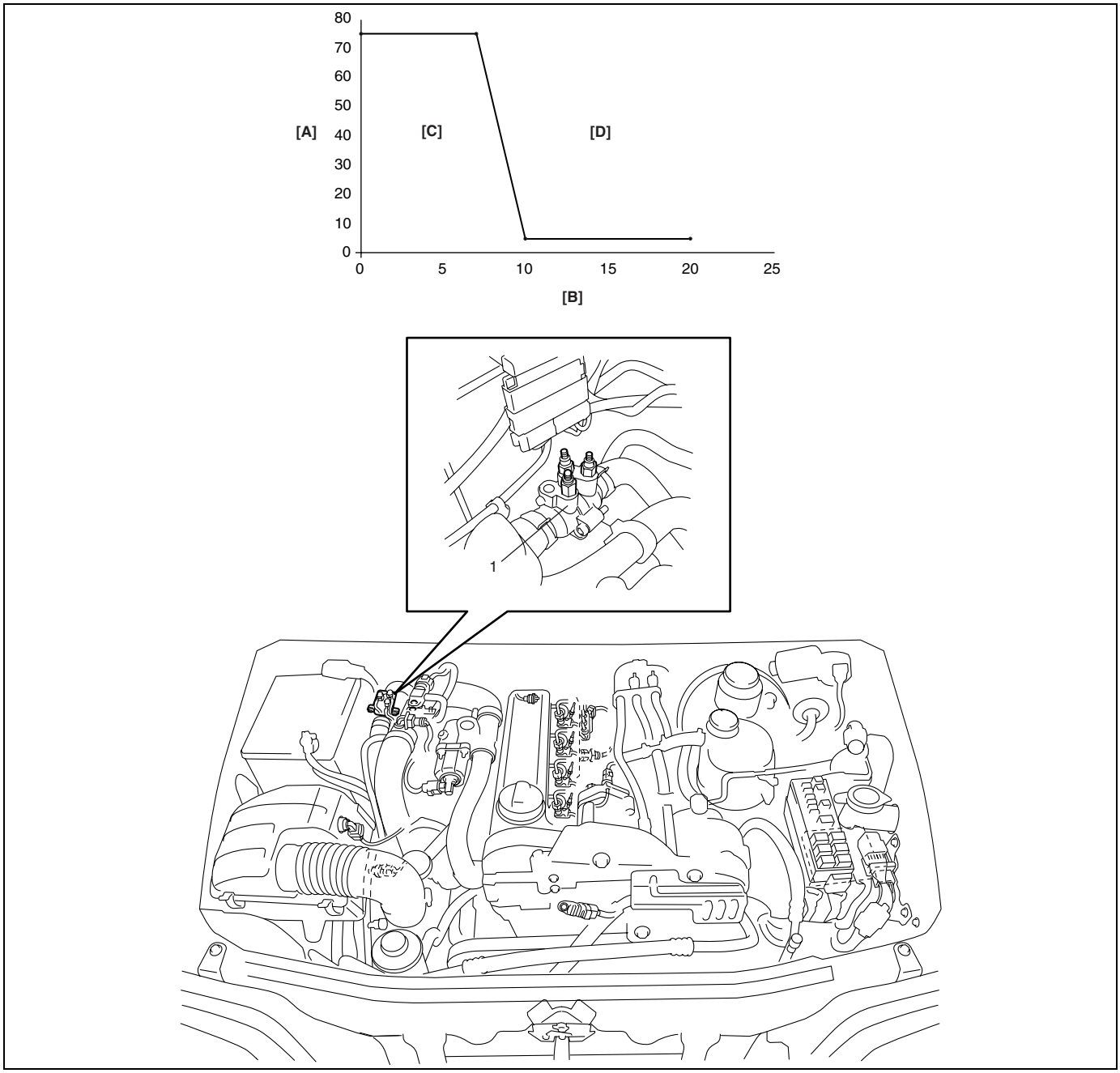

[A]: Engine coolant temperature (°C)	[C]: ON
[B]: Intake air temperature (°C)	[D]: OFF

Diagnosis

Diagnosis Table

Condition	Possible Cause	Correction
Heater blower motor does not work even when its switch is ON.	Fuse blown	Replace fuse to check for short.
	Heater blower resistor faulty	Check heater blower resistor.
	Heater blower fan switch faulty	Check heater blower fan switch.
	Heater blower motor faulty	Replace heater blower motor.
	Wiring or grounding faulty	Repair as necessary.
Incorrect temperature output	Control cable broken or binding	Check control cable.
	Temperature control lever faulty	Check temperature control lever.
	Control cable clamp position is faulty	Check and adjust.
	Air damper broken	Repair air damper.
	Air ducts clogged	Repair air ducts.
	Heater core leaking or clogged	Replace heater core.
	Heater hoses leaking or clogged	Replace heater hoses.
When mode control lever is changed, air outlet port is not changed.	Control cable broken or binding	Check control cable.
	Mode control lever faulty	Check mode control lever.
	Control cable clamp position is faulty	Check and adjust.
	Air damper broken	Repair air damper.
	Air ducts leaking on clogged	Repair air ducts.
Heating performance is poor.	Wiring or grounding for additional heater assembly faulty	Repair as necessary.
	Additional heater fuses blown	Replace additional heater fuses to check for short.
	Additional heater relays faulty	Check additional heater relays.
	Additional heater assembly faulty	Check additional heater assembly.
	ECM faulty	Check ECM.

Wiring Circuit

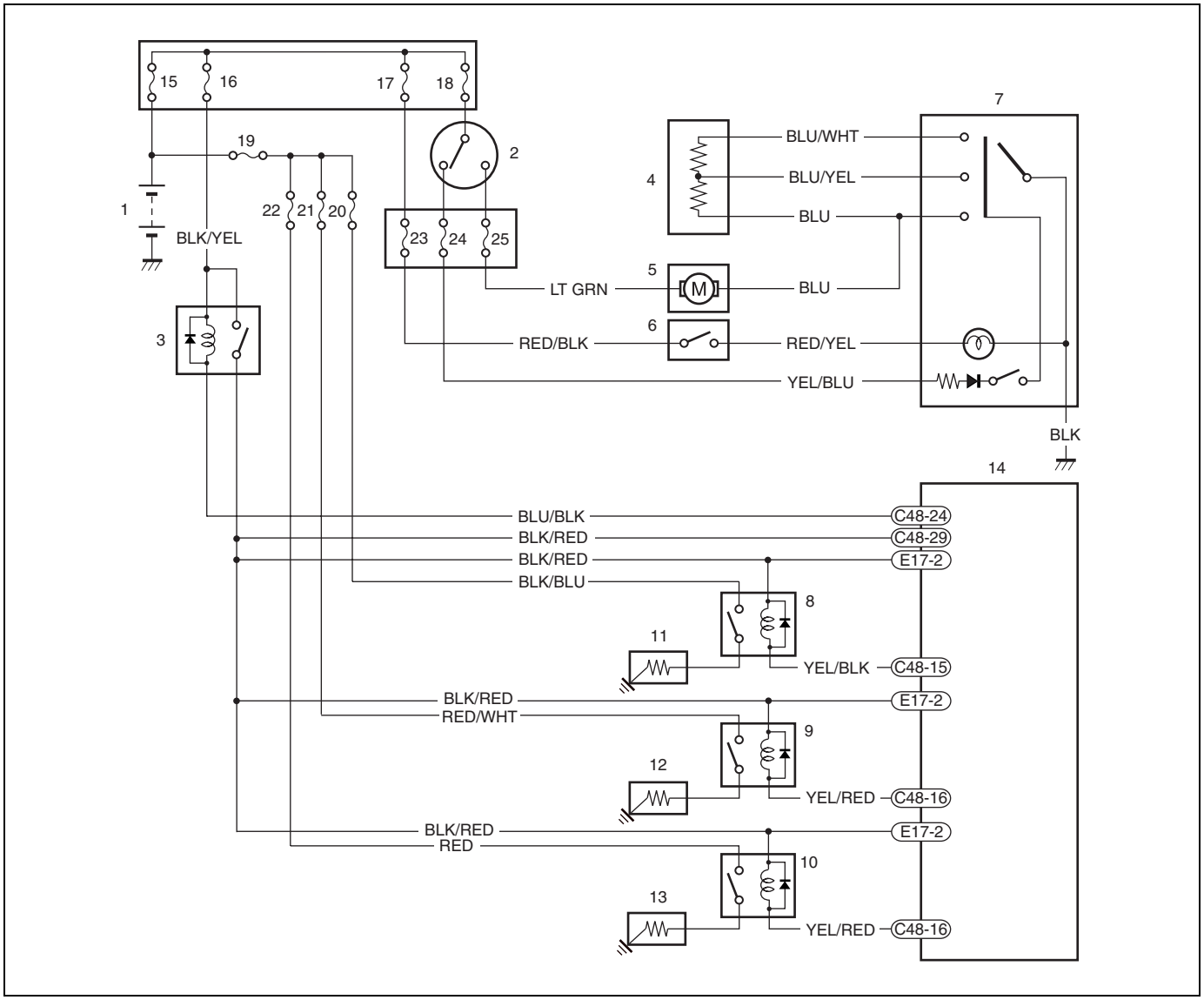

1. Battery	10. Additional heater relay No.3	19. “ADDITIONAL HEATER CIRCUIT” fuse (120 A)
2. Ignition switch	11. Additional heater No.1	20. “ADDITIONAL HEATER No.1” fuse (50 A)
3. Main relay	12. Additional heater No.2	21. “ADDITIONAL HEATER No.2” fuse (50 A)
4. Heater blower resistor	13. Additional heater No.3	22. “ADDITIONAL HEATER No.3” fuse (50 A)
5. Heater blower motor	14. ECM	23. “TAIL” fuse (10 A)
6. Lighting switch	15. Fuse (80 A)	24. “WIPER-WASHER” fuse (15 A)
7. Heater control lever assembly	16. Fuse (30 A)	25. “HEATER” fuse (20 A)
8. Additional heater relay No.1	17. Fuse (60 A)	
9. Additional heater relay No.2	18. Fuse (60 A)	

On Vehicle Service

Heater Unit/Boost Ventilation

Removal

1) Disconnect negative (–) cable at battery.
2) If equipped with air bag system, disable air bag system referring to “Disabling Air Bag System” in Section 10B.

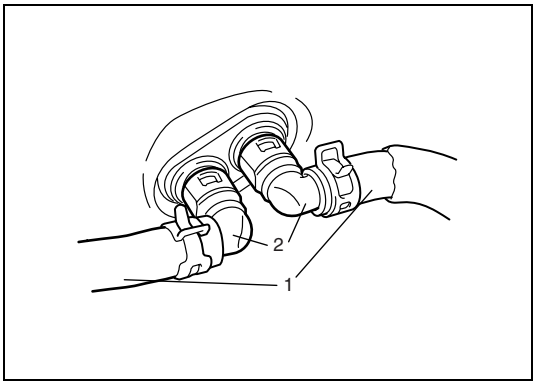

3) Drain engine coolant, and then disconnect water hoses (1) from heater joints (2).

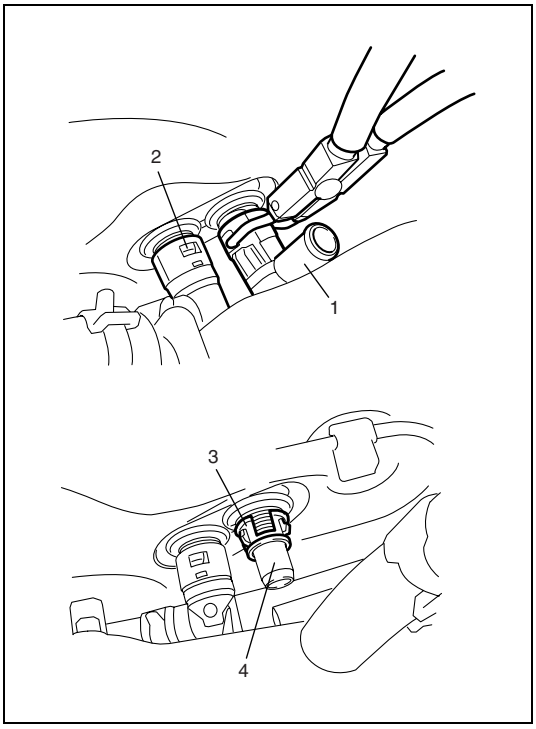

4) Remove right heater joint (1) from heater core pipe by unlocking two locks (2) of retainer (color: blue) for heater joint.

NOTE:

- **To unlock two locks of retainer, plier as shown in figure is useful.**
- **After removal of heater joint, retainer (3) should be left at heater core pipe (4). Therefore, do not try to remove heater joint with retainer.**

5) Remove retainer for heater joint from heater core pipe.

6) Remove instrument panel referring to “Instrument Panel” in Section 9.

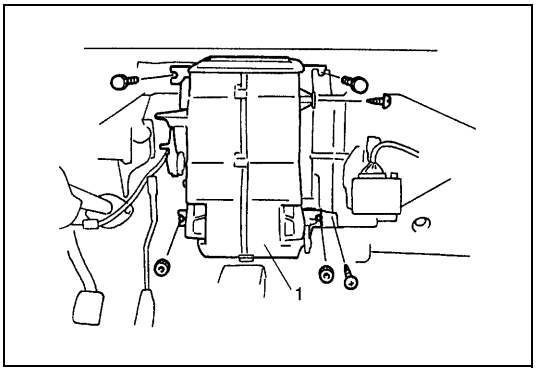

7) Remove bolts, nuts, and screws as shown figure.
8) Remove heater unit (1).

Installation

Install heater unit by reversing removal procedure noting the following items.

- When installing each part, be careful not to catch any cable or wiring harness.
- Adjust control cable referring to “Heater Control Lever Assembly” in this section.
- Fill engine coolant to radiator referring to “Cooling Replacement” in Section 6B2.
- If equipped with air bag system, enable air bag system referring to “Enabling Air Bag System” in Section 10B.

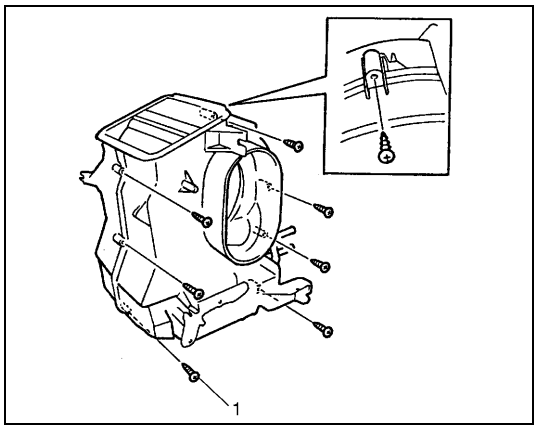

CAUTION:

When the heater unit is disassembled and reassembled, locking force of the heater case lock may reduce. In such a case, tighten the heater case with a tapping screw of M4×L16 (1) as shown in the figure, or air may leak from its joint section.

Additional Heater Assembly

Inspection

1) Disconnect negative cable at battery.
2) Disconnect additional heater plug wires.

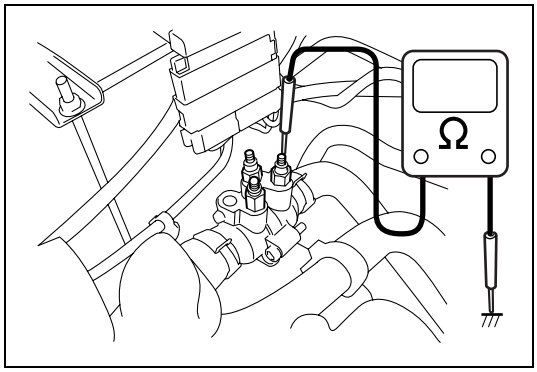

3) Check resistance between additional heater plug and vehicle body ground. If resistance is out of specification, replace additional heater assembly with new one.

Additional heater plug resistance
0.55 – 0.65 Ω at 20°C, 68°F

Removal

1) Disconnect negative cable at battery.

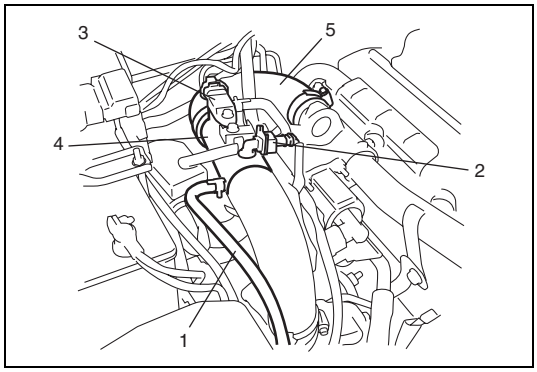

2) Disconnect west gate actuator hose (1), IAT sensor connector (2) and boost pressure sensor (3) connector.
3) Remove turbocharger outlet air pipe (4) with outlet air hose No.2 (5).

4) Drain cooling system referring to “Cooling Replacement” in Section 6B2.

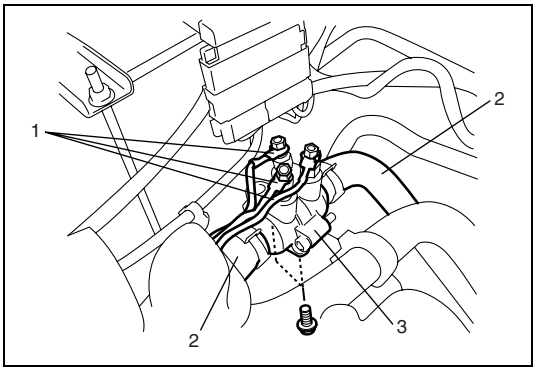

5) Disconnect additional heater plug wires (1) and heater hoses (2) from additional heater assembly (3).
6) Remove additional heater assembly from its bracket.

Installation

Reverse the removal procedure for installation noting the followings.

- Tighten additional heater plug wire nuts to specified torque.

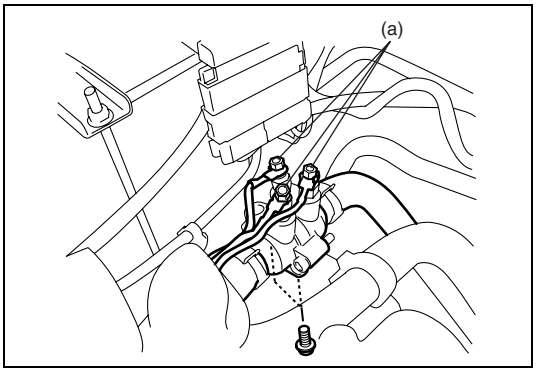

Tightening torque
Additional heater plug wire nut
(a): Less than 4 N·m (0.4 kg-m, 3.0 lb-ft)

- Refill cooling system referring to “Cooling Replacement” in Section 6B2.
- Check cooling system leakage referring to “Engine Cooling System Inspection and Service” in Section 6B2.

Additional Heater Relays

Inspection

1) Disconnect negative cable at battery.

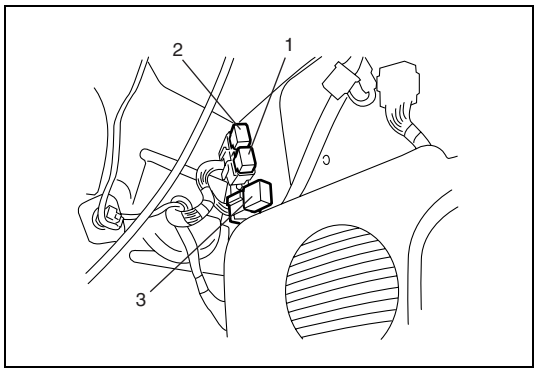

2) Remove additional heater relay No.1 (1), No.2 (2) or No.3 (3) from relay connector located under instrument panel at the passenger seat side.

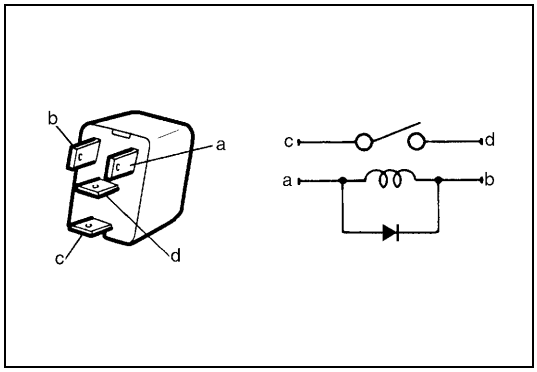

3) Check that there is no continuity between terminal “c” and “d”. If there is continuity, replace relay with new one.
4) Connect battery positive (+) terminal to terminal “b” of relay and battery negative (–) terminal “a” of relay. Then, check continuity between terminal “c” and “d”. If there is no continuity when battery is connected to relay, replace relay with new one.

SECTION 1B

AIR CONDITIONING (OPTIONAL)

WARNING:

For vehicles equipped with a Supplemental Restraint (Air Bag) System:

- **Service on and around the air bag system components or wiring must be performed only by an authorized SUZUKI dealer. Refer to "Air Bag System Components and Wiring Location View" under "General Description" in air bag system section in order to confirm whether you are performing service on or near the air bag system components or wiring. Please observe all WARNINGS and "Service Precautions" under "On-Vehicle Service" in air bag system section before performing service on or around the air bag system components or wiring. Failure to follow WARNINGS could result in unintentional activation of the system or could render the system inoperative. Either of these two conditions may result in severe injury.**
- **Technical service work must be started at least 90 seconds after the ignition switch is turned to the "LOCK" position and the negative cable is disconnected from the battery. Otherwise, the system may be activated by reserve energy in the Sensing and Diagnostic Module (SDM).**

CAUTION:

The air conditioning system of this vehicle uses refrigerant HFC-134a (R-134a).
None of refrigerant, compressor oil and component parts is interchangeable between two types of A/C: one using refrigerant HFC-134a (R-134a) and the other using refrigerant CFC-12 (R-12).
Be sure to check which refrigerant is used before any service work including inspection and maintenance. For identification between these two types, refer to "Refrigerant Type" in this section.
When replenishing or changing refrigerant and compressor oil and when replacing parts, make sure that the material or the part to be used is appropriate to the A/C installed in the vehicle being serviced. Use of incorrect one will result in leakage of refrigerant, damage in parts or other faulty condition.

NOTE:

For the items with asterisk (*) in the "CONTENTS" below, refer to the same section of the Service Manual mentioned in "FOREWORD" of this manual.

CONTENTS

General Description 1B-3
Major Components and Location 1B-3
Refrigerant Circulation ..... *
Refrigerant Type ..... *
Diagnosis 1B-4
General Diagnosis Table 1B-4
Abnormal Noise Diagnosis ..... *
Abnormal noise from compressor ..... *
Abnormal noise from magnetic clutch ..... *
Abnormal noise from tubing ..... *
Abnormal noise from condenser ..... *
Abnormal noise from crankshaft pulley ..... *
Abnormal noise from tension pulley ..... *
Abnormal noise from A/C evaporator ..... *
Abnormal noise from blower fan motor ..... *
Quick Checking of Refrigerant Charge ..... *
Performance Diagnosis ..... *
Performance diagnosis table ..... *
Detail diagnosis table (Ambient temperature at 30°C (86°F)) ..... *
Compressor Drive Belt 1B-6
Electronical Diagnosis 1B-7
Wiring Diagram 1B-7
Refrigerant Recovery, Evacuating and Charging ..... *
Operation Procedure for Refrigerant Charging ..... *
Recovery ..... *
Replenishing Compressor Oil ..... *
Evacuating ..... *
Evacuating procedure ..... *

Charging ..... *
Charging procedure ..... *
Removing Manifold Gauge Set ..... *
Leak Test ..... *
On-Vehicle Service 1B-9
Service Precaution 1B-9
Refrigerant line 1B-9
Handling refrigerant HFC-134a (R-134a) ..... *
Condenser Assembly 1B-10
Receiver/Dryer 1B-11
Condenser Cooling Fan Assembly 1B-11
Cooling Unit (Evaporator) 1B-12
A/C Evaporator Temperature Sensor 1B-14
Expansion Valve ..... *
Refrigerant Pressure Sensor 1B-16
A/C Switch ..... *
Condenser Cooling Fan Motor Relay 1B-17
Compressor Relay and A/C Relay 1B-17
Compressor 1B-17
Magnet Clutch 1B-19
Lip Seal 1B-23
Relief Valve 1B-25
Tightening Torque Specification 1B-26
Required Service Materials 1B-26
Special Tools 1B-26

General Description

Major Components and Location

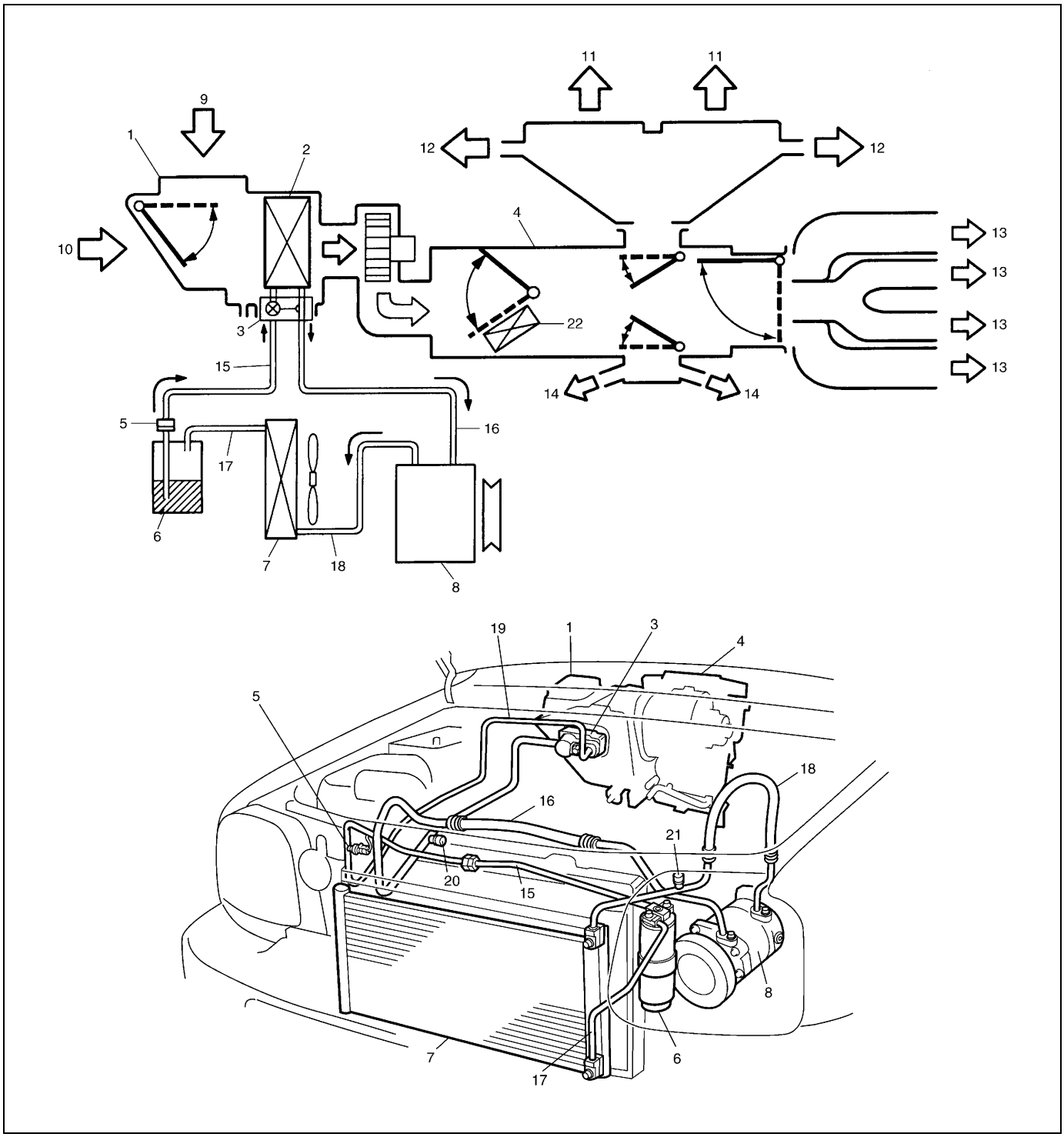

1. Cooling unit	9. Fresh air	17. Liquid pipe No.1
2. A/C evaporator	10. Recirculation air	18. Discharge hose
3. Expansion valve	11. Defroster air	19. Cooling unit inlet pipe
4. Heater unit	12. Demister air	20. Low pressure service valve
5. Refrigerant pressure sensor	13. Ventilation air	21. High pressure service valve
6. Receiver/dryer	14. Foot air	22. Heater core
7. Condenser assembly	15. Liquid pipe No.2	
8. Compressor	16. Suction hose	

Diagnosis

General Diagnosis Table

Condition	Possible Cause	Correction
Cool air doesn't come out. (A/C system doesn't operate.)	No refrigerant	Perform recover, evacuation and charging.
	Fuse blown	Check fuses in main and circuit fuse boxes, and check short circuit to ground.
	A/C switch faulty	Check A/C switch.
	Heater blower fan switch faulty	Check heater blower fan switch referring to Section 1A.
	A/C evaporator temperature sensor faulty	Check A/C evaporator temperature sensor.
	Refrigerant pressure sensor faulty	Check refrigerant pressure sensor.
	Wiring or grounding faulty	Repair as necessary.
	ECT sensor faulty	Check ECT sensor referring to Section 6E2.
	ECM and its circuit faulty	Check ECM and its circuit referring to Section 6E2.
Cool air doesn't come out. (A/C compressor doesn't operate.)	ECM faulty	Check ECM and its circuit referring to Section 6E2.
	Thermal switch faulty	Check thermal switch.
	Magnet clutch faulty	Check magnet clutch.
	Compressor drive belt loosen or broken	Adjust or replace drive belt.
	Compressor relay faulty	Check compressor relay.
	Compressor faulty	Check compressor.
Cool air doesn't come out. (A/C condenser cooling fan motor doesn't operate.)	Fuse blown	Check fuses in main fuse box, and check short circuit to ground.
	Wiring or grounding faulty	Repair as necessary.
	Condenser cooling fan motor relays faulty	Check condenser cooling fan motor relays.
	Condenser cooling fan motor faulty	Check condenser cooling fan motor.
Cool air doesn't come out. (Heater blower motor doesn't operate.)	Fuse blown	Check fuses in main and circuit fuse boxes, and check short circuit to ground.
	Heater blower resistor faulty	Check heater blower resistor referring to Section 1A.
	Heater blower fan switch faulty	Check heater blower fan switch referring to Section 1A.
	Wiring or grounding faulty	Repair as necessary.
	Heater blower motor faulty	Check heater blower motor referring to Section 1A.

Condition	Possible Cause	Correction
Cool air doesn't come out. (A/C system normally operates.)	Insufficient or excessive charge of refrigerant	Check charge of refrigerant and system for leaks.
	Condenser clogged	Check condenser.
	A/C evaporator clogged or frosted	Check A/C evaporator and A/C evaporator thermistor.
	A/C evaporator temperature sensor faulty	Check A/C evaporator temperature sensor.
	Expansion valve faulty	Check expansion valve.
	Receiver/dryer clogged	Check receiver/dryer.
	Compressor drive belt loosen or broken	Adjust or replace drive belt.
	Magnetic clutch faulty	Check magnetic clutch.
	Compressor faulty	Check compressor.
	Air in A/C system	Replace receiver/dryer, and perform evacuation and charging.
	Air leaking from cooling unit or air duct	Repair as necessary.
	Heater and ventilation system faulty	Check air inlet box (cooling unit), heater control lever assembly and heater unit referring to Section 1A.
	Heater blower motor faulty	Check heater blower motor referring to Section 1A.
	Excessive compressor oil existing in A/C system	Pull out compressor oil in A/C system circuit, and replace compressor.
Cool air doesn't come out only intermittently.	Wiring or grounding faulty	Repair as necessary.
	Expansion valve faulty	Check expansion valve.
	Excessive moisture in A/C system	Replace receiver/dryer, and perform evacuation and charging.
	Magnetic clutch faulty	Check magnetic clutch.
	Excessive charge of refrigerant	Check charge of refrigerant.
	Thermal switch faulty	Check thermal switch.
Cool air comes out only at high speed.	Condenser clogged	Check A/C condenser.
	Insufficient charge of refrigerant	Check charge of refrigerant.
	Air in A/C system	Replace receiver/dryer, and perform evacuation and charging.
	Compressor drive belt loosen or broken	Adjust or replace drive belt.
	Compressor faulty	Check compressor.
Cool air doesn't come out only at high speed.	Excessive charge of refrigerant	Check charge refrigerant.
	A/C evaporator frosted	Check A/C evaporator and A/C evaporator temperature sensor.
Velocity of cooled air is insufficient.	A/C evaporator clogged or frosted	Check A/C evaporator and A/C evaporator temperature sensor.
	Air leaking from cooling unit or air duct	Repair as necessary.
	Heater blower motor faulty	Check heater blower motor referring to Section 1A.
	Wiring or grounding faulty	Repair as necessary.

Compressor Drive Belt

Inspection

Refer to “Generator Drive Belt Inspection” in Section 6H2.

Removal

Refer to “Generator Drive Belt Removal and Installation” in Section 6H2.

Installation

Refer to “Generator Drive Belt Removal and Installation” in Section 6H2.

Electronical Diagnosis

Wiring Diagram

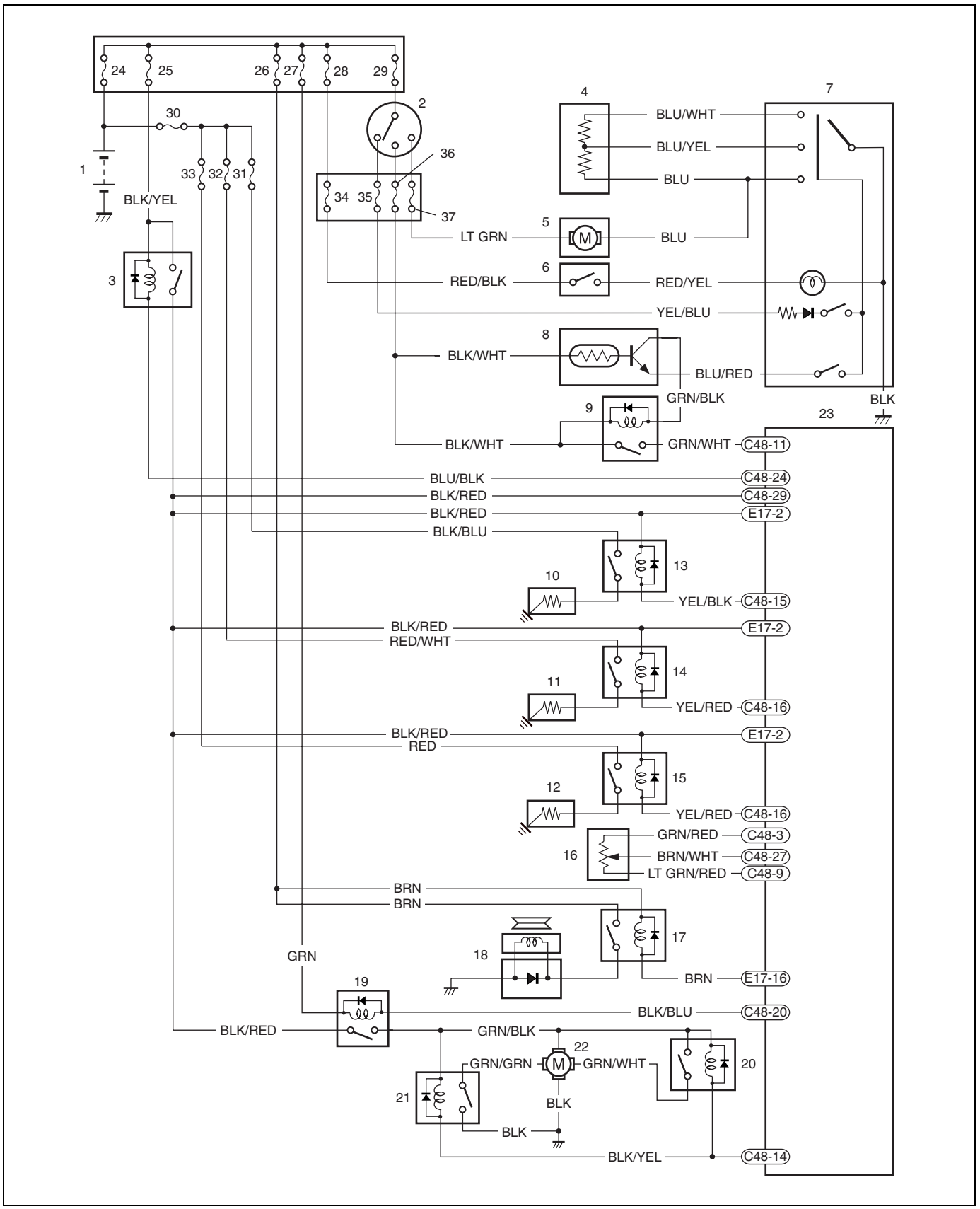

1. Battery	14. Additional heater relay No.2	27. Fuse (30 A)
2. Ignition switch	15. Additional heater relay No.3	28. Fuse (60 A)
3. Main relay	16. Refrigerant pressure sensor	29. Fuse (60 A)
4. Heater blower resistor	17. Compressor relay	30. “ADDITIONAL HEATER CIRCUIT” fuse (120 A)
5. Heater blower motor	18. Compressor	31. “ADDITIONAL HEATER No.1” fuse (50 A)
6. Lighting switch	19. Condenser cooling fan motor relay No.1	32. “ADDITIONAL HEATER No.2” fuse (50 A)
7. Heater control lever assembly	20. Condenser cooling fan motor relay No.2	33. “ADDITIONAL HEATER No.3” fuse (50 A)
8. A/C evaporator temperature sensor	21. Condenser cooling fan motor relay No.3	34. “TAIL” fuse (10 A)
9. A/C relay	22. Condenser cooling fan motor	35. “WIPER-WASHER” fuse (15 A)
10. Additional heater No.1	23. ECM	36. “IG-COIL METER” fuse (15 A)
11. Additional heater No.2	24. Fuse (80 A)	37. “HEATER” fuse (20 A)
12. Additional heater No.3	25. Fuse (30 A)	
13. Additional heater relay No.1	26. Fuse (15 A)	

On-Vehicle Service

Service Precaution

When servicing air conditioning system, note the following instructions.

Refrigerant line

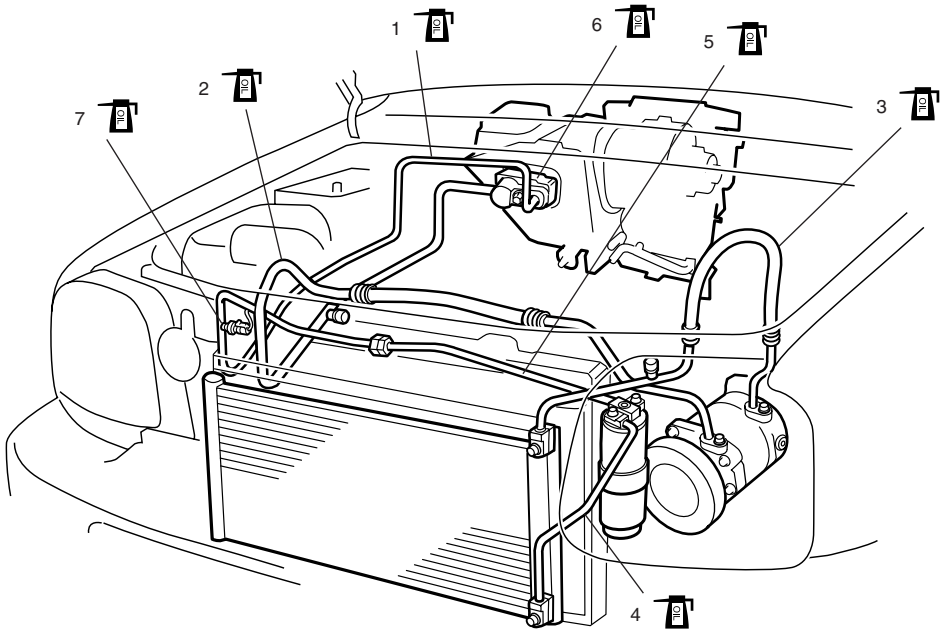

OIL 1. Cooling unit inlet pipe: Apply compressor oil to O-ring.	OIL 4. Liquid pipe No.1: Apply compressor oil to O-ring.	OIL 7. Refrigerant pressure sensor: Apply compressor oil to O-ring.
OIL 2. Suction hose: Apply compressor oil to O-ring.	OIL 5. Liquid pipe No.2: Apply compressor oil to O-ring.	
OIL 3. Discharge hose: Apply compressor oil to O-ring.	OIL 6. Expansion valve: Apply compressor oil to O-ring.	

- Never use heat for bending pipes. When bending a pipe, try to make its bending radius as slight as possible.
- Keep internal parts of air conditioning free from moisture and dirt. When disconnecting any line from system, install a blind plug or cap to the fitting immediately.
- When connecting hoses and pipes, apply a few drops of compressor oil to seats of coupling nuts and O-ring.
- When tightening or loosening a fitting, use two wrenches, one for turning and the other for support.
- Tighten flared nuts by the following specified torque.

Tightening torque (Flared Nut Used for)
8 mm pipe: 13 N·m (1.3 kg-m, 9.5 lb-ft)
12 mm pipe: 23 N·m (2.3 kg-m, 17.0 lb-ft)
14.5 mm pipe: 33 N·m (3.3 kg-m, 24.0 lb-ft)

- Route drain hose so that drained water does not make any contact to vehicle components.
- Before evacuating and charging refrigerant, replenish specified amount of compressor oil to compressor suction side by referring to “Replenishing Compressor Oil” in this section.

Condenser Assembly

CAUTION:

Do not damage condenser fins. If condenser fin is bent, straighten it by using flat head screwdriver or pair of pliers.

Inspection

Check the following.

- Check clog of condenser fins.
  If any clogs are found, condenser fins should be washed with water and should be dried with compressed air.
- Check condenser fins for leakage and breakage.
  If any abnormality is found, repair or replace condenser.
- Check condenser fittings for leakage.
  If any abnormality is found, repair or replace condenser.

Removal

1) Disconnect negative (–) cable at battery.
2) Recover refrigerant from A/C system by referring to “Recovery” in this section.

NOTE:

The amount of removed compressor oil must be measured for replenishing compressor oil.

3) Remove front bumper.
4) Remove radiator referring to “Radiator Removal and Installation” in 6B2.

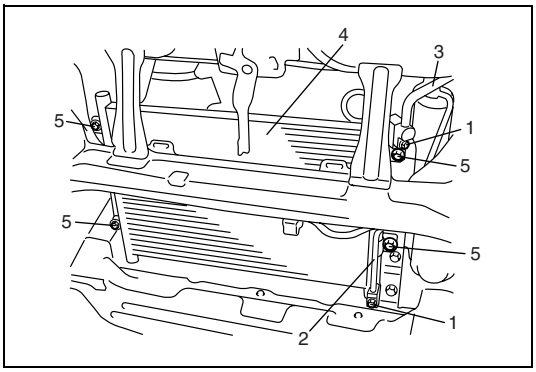

5) Remove two bolts (1) of liquid pipe (2) and discharge hose (3), and then disconnect liquid pipe and discharge hose from condenser (4).
6) Remove four bolts (5) of condenser.
7) Remove condenser by pulling it out upward.

Installation

Reverse removal procedure to install condenser noting the following instructions.

- Replenish specified amount of compressor oil to compressor suction side by referring to “Replenishing Compressor Oil” in this section.
- Evacuate and charge refrigerant by referring to “Evacuating” and “Charging” in this section.

Receiver/Dryer

Removal

1) Recover refrigerant from A/C system by referring to “Recovery” in this section.

NOTE:

The amount of removed compressor oil must be measured for replenishing compressor oil.

2) Remove front bumper.
3) Remove two bolts of liquid pipes, and then disconnect liquid pipes from receiver/dryer.

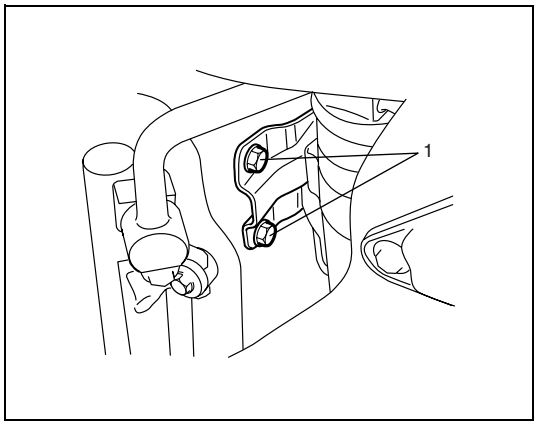

4) Remove two bracket bolts (1).
5) Remove receiver/dryer with its bracket by pulling it out upward.
6) Remove bracket from receiver dryer.

Installation

Reverse removal procedure to install receiver/dryer noting the following instructions.

- Replenish specified amount of compressor oil to compressor suction side by referring to “Replenishing Compressor Oil” in this section.
- Evacuate and charge refrigerant by referring to “Evacuating” and “Charging” in this section.

Condenser Cooling Fan Assembly

Inspection

Refer to “Radiator Cooling Fan Inspection” in Section 6B2.

Removal

Refer to “Radiator Cooling Fan Removal and Installation” in Section 6B2.

Installation

Refer to “Radiator Cooling Fan Removal and Installation” in Section 6B2.

Cooling Unit (Evaporator)

CAUTION:

Be careful not to damage A/C evaporator fins. If A/C evaporator fin is bent, straighten A/C evaporator fin by using flat head screwdriver or pair of pliers.

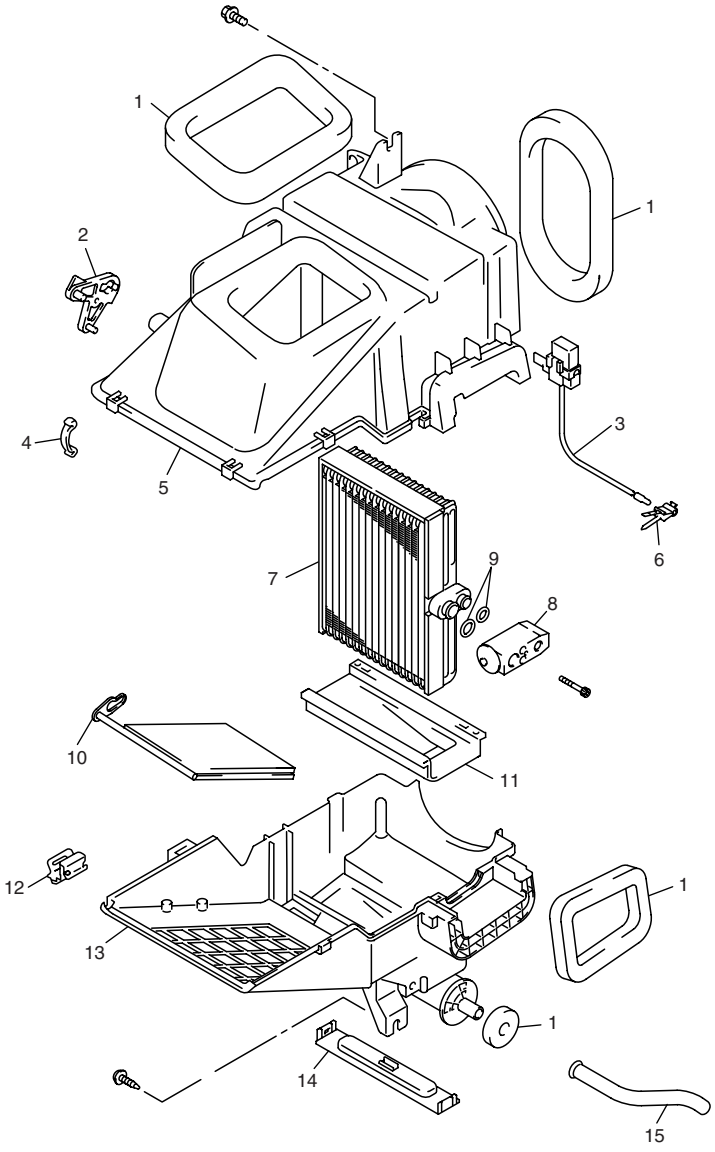

1. Packing	5. Upper case	9. O-ring	13. Lower case
2. Link	6. Thermister clamp	10. Air inlet door	14. Filter cover
3. A/C evaporator temperature sensor	7. Evaporator	11. Evaporator lower packing	15. Drain hose
4. Clamp case	8. Expansion valve	12. Control cable clamp	

Removal

1) Disconnect negative (–) cable at battery.
2) Recover refrigerant from A/C system by referring to “Recovery” in this section.

NOTE:

The amount of removed compressor oil must be measured for replenishing compressor oil.

3) Drain engine coolant, and then disconnect heater hoses from heater unit referring to “Heater Unit/Boost Ventilation” in Section 1A.
4) Disable air bag system referring to “Disabling Air Bag System” in Section 10B (if equipped).

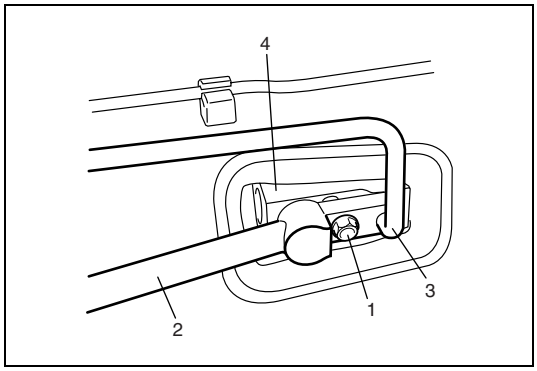

5) Remove attaching bolt (1).
6) Disconnect suction hose (2) and liquid pipe (3) from expansion valve (4).

7) Remove instrument panel referring to “Instrument Panel” in Section 9.

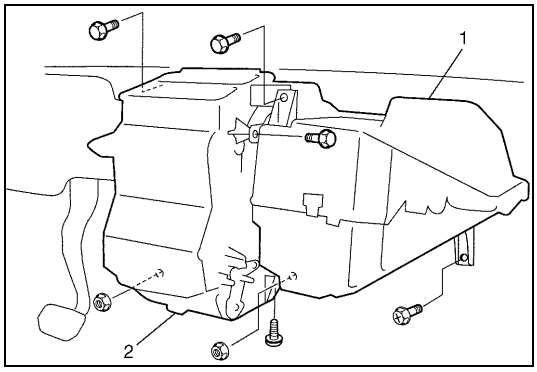

8) Remove cooling unit (1) with heater unit (2) from vehicle body.
9) Separate cooling unit (1) from heater unit (2).

Inspection

Check the followings.

- Check clog of A/C evaporator fins.
  If any clogs are found, A/C evaporator fins should be washed with water, and should be dried with compressed air.
- Check A/C evaporator fins for leakage and breakage.
  If any abnormality is found, repair or replace A/C evaporator.
- Check A/C evaporator fittings for leakage.
  If any abnormality is found, repair or replace A/C evaporator.

Installation

Reverse removal procedure to install cooling unit, and then noting the following instructions.

- If A/C evaporator thermistor is removed, its should be reinstalled in original position.

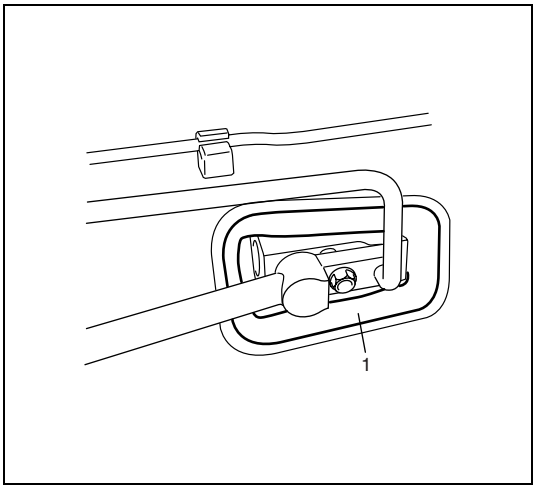

- Install packing (1) uniformly to installation hole.
- Replenish specified amount of compressor oil to compressor suction side by referring to “Replenishing Compressor Oil” in this section.
- Evacuate and charge refrigerant by referring to “Evacuating” and “Charging” in this section.
- Adjust mode control cable, temperature control cable and fresh air control cable by referring to “Heater Control Lever Assembly” in Section 1A.
- Enable air bag system referring to “Enable Air Bag System” in Section 10B. (if equipped)
- Fill engine coolant to radiator referring to “Radiator Cooling Fan Removal and Installation” in Section 6B2.

A/C Evaporator Temperature Sensor

Inspection

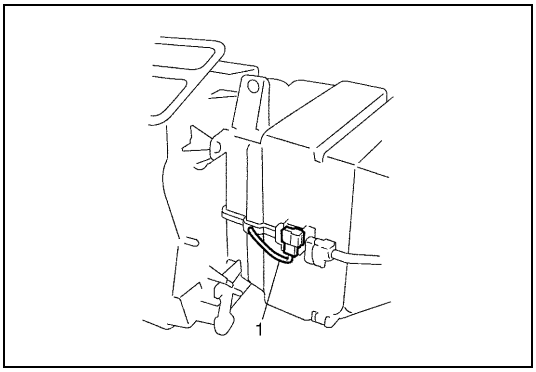

1) Remove A/C evaporator temperature sensor (1) from cooling unit referring to “Cooling Unit (Evaporator)” in this section.

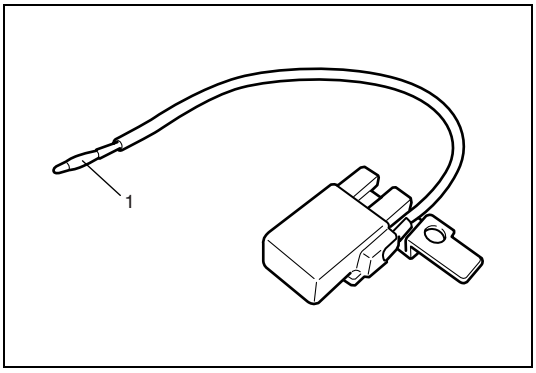

2) Put temperature sensing part (1) of A/C evaporator temperature sensor into iced water whose temperature is below 4°C (39.2°F).

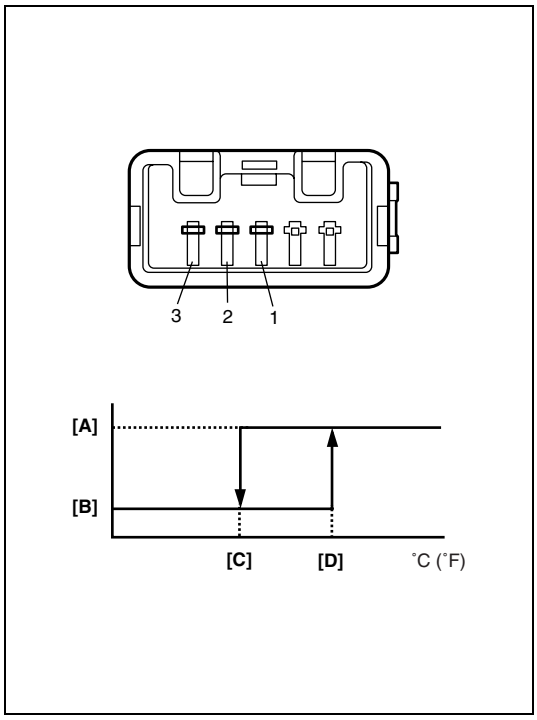

3) Connect battery positive terminal (+) to terminal (2) of A/C evaporator temperature sensor connector.
4) Connect battery negative terminal (–) to terminal (3) of A/C evaporator thermistor connector.
5) Keep battery terminals connected to A/C evaporator temperature sensor connector, and then check for continuity between terminal (1) and (3). If there is continuity, replace A/C evaporator temperature sensor with new one.
6) Pull temperature sensing part of A/C evaporator temperature sensor out of iced water and expose it to the air whose temperature is more than 5°C (41°F).
7) Keep battery terminals connected to A/C evaporator temperature sensor connector, and then check for continuity between terminal (1) and (3). If there is no continuity, replace A/C evaporator temperature sensor with new one.

[A]: ON
[B]: OFF
[C]: Approximately 4°C (39.2°F)
[D]: Approximately 5°C (41°F)

Refrigerant Pressure Sensor

Removal

1) Recover refrigerant referring to “Recovery” in this section.
2) Disconnect negative (–) cable at battery.
3) Disconnect refrigerant pressure sensor connector.
4) Remove refrigerant pressure sensor from pipe.

Installation

Reverse removal procedure noting the following points.

- Apply compressor oil to refrigerant pressure sensor O-ring.
- Perform evacuation, and then charge refrigerant referring to “Evacuating” and “Charging” in this section.

Tightening torque
Refrigerant pressure sensor: 9.0 N·m (0.9 kg-m, 6.5 lb-ft)

Inspection

1) Connect manifold gauge to A/C system, and then operate A/C system.
2) Check output voltage for refrigerant pressure sensor (1) between GRY and BRN/WHT wire terminals, and then compare measured voltage with specified voltage in graph.
   If it does not show such characteristic as shown in graph, replace refrigerant pressure sensor with new one.

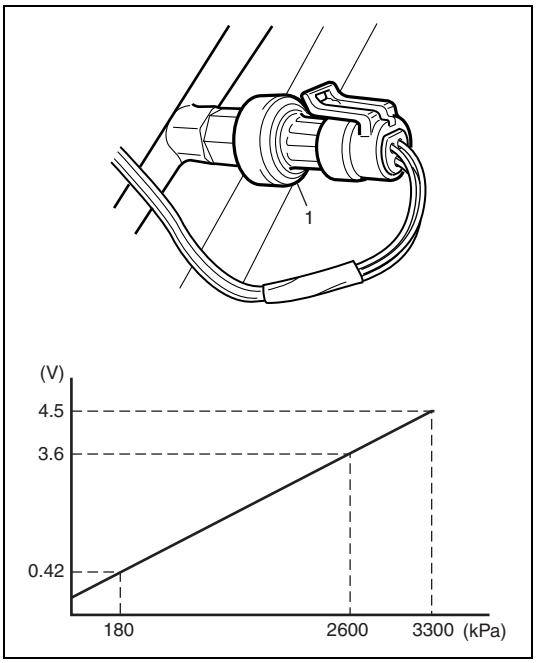

Condenser Cooling Fan Motor Relay

Inspection

Refer to “Main Relay and Radiator Fan Relay No.1, No.2, No.3 Inspection” in Section 6E2.

Compressor Relay and A/C Relay

Inspection

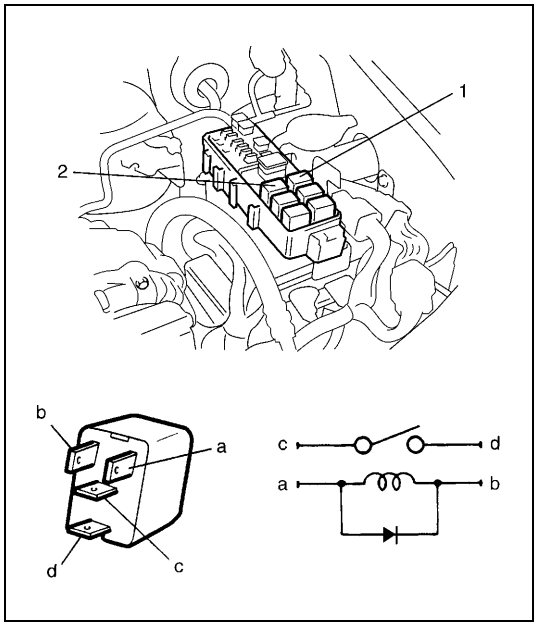

1) Check that there is no continuity between terminal “c” and “d”. If there is continuity, replace relay with new one.
2) Connect battery positive (+) terminal to terminal “b” of relay and battery negative (–) terminal “a” of relay. Then, check for continuity between terminal “c” and “d”. If there is no continuity when battery is connected to relay, replace relay with new one.

1. Compressor relay
2. A/C relay

Compressor

Removal

1) Run engine at idle speed with air conditioning ON for 10 minutes. Then, stop the engine.
2) Disconnect negative (–) cable at battery.
3) Recover refrigerant from A/C system by referring to “Recovery” in this section.

NOTE:

The amount of removed compressor oil must be measured for replenishing compressor oil.

4) Remove generator referring to “Generator Removal and Installation” in Section 6H2.

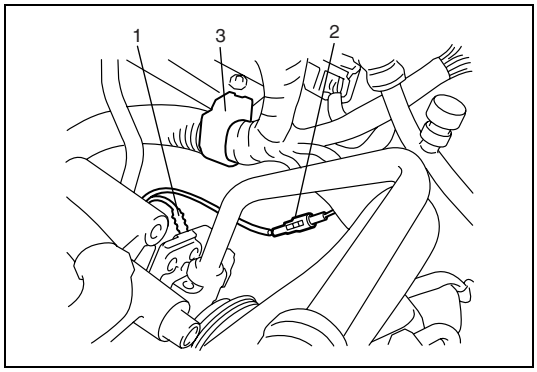

5) Disconnect magnet clutch coil lead wire (1) and thermal switch lead wire (2).
6) Disengage harness clip (3) from ECM bracket.

7) Hoist vehicle.

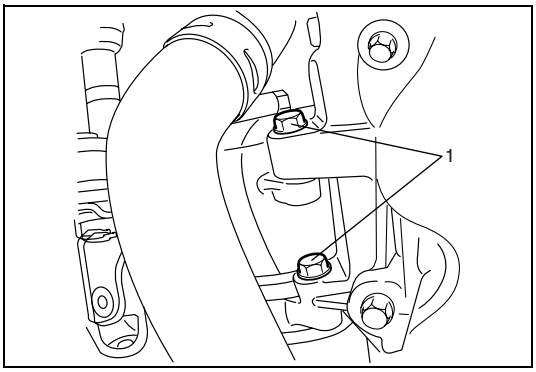

8) Remove two compressor mounting bolts (1).

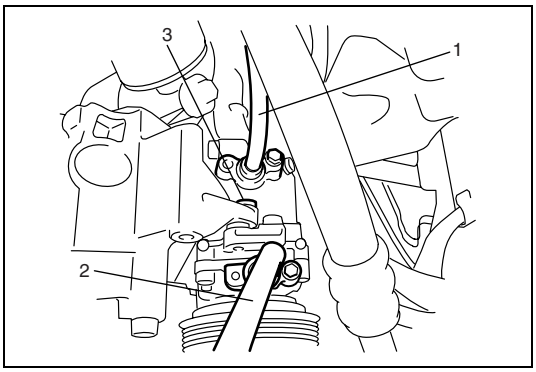

9) Disconnect discharge hose (1) and suction hose (2) by removing their bolts, and then remove one compressor mounting bolt (3).

NOTE:

Cap open fittings immediately to keep moisture out of system.

10) Remove compressor from its bracket by pulling it out upward.

NOTE:

Be careful not to spill compressor oil during removal.

Installation

Reverse removal procedure for installation, and then noting the following instructions.

- Replenish specified amount of compressor oil to compressor suction side by referring to “Replenishing Compressor Oil” in this section.
- Evacuate and charge system by referring to “Recovery” in this section.
- Adjust drive belt tension by referring to “Compressor Drive Belt” in this section.
- Tighten compressor mounting bolts to the specified torque.

Tightening torque
Compressor mounting bolt: 28 N·m (2.8 kg-m, 20.5 lb-ft)

Magnet Clutch

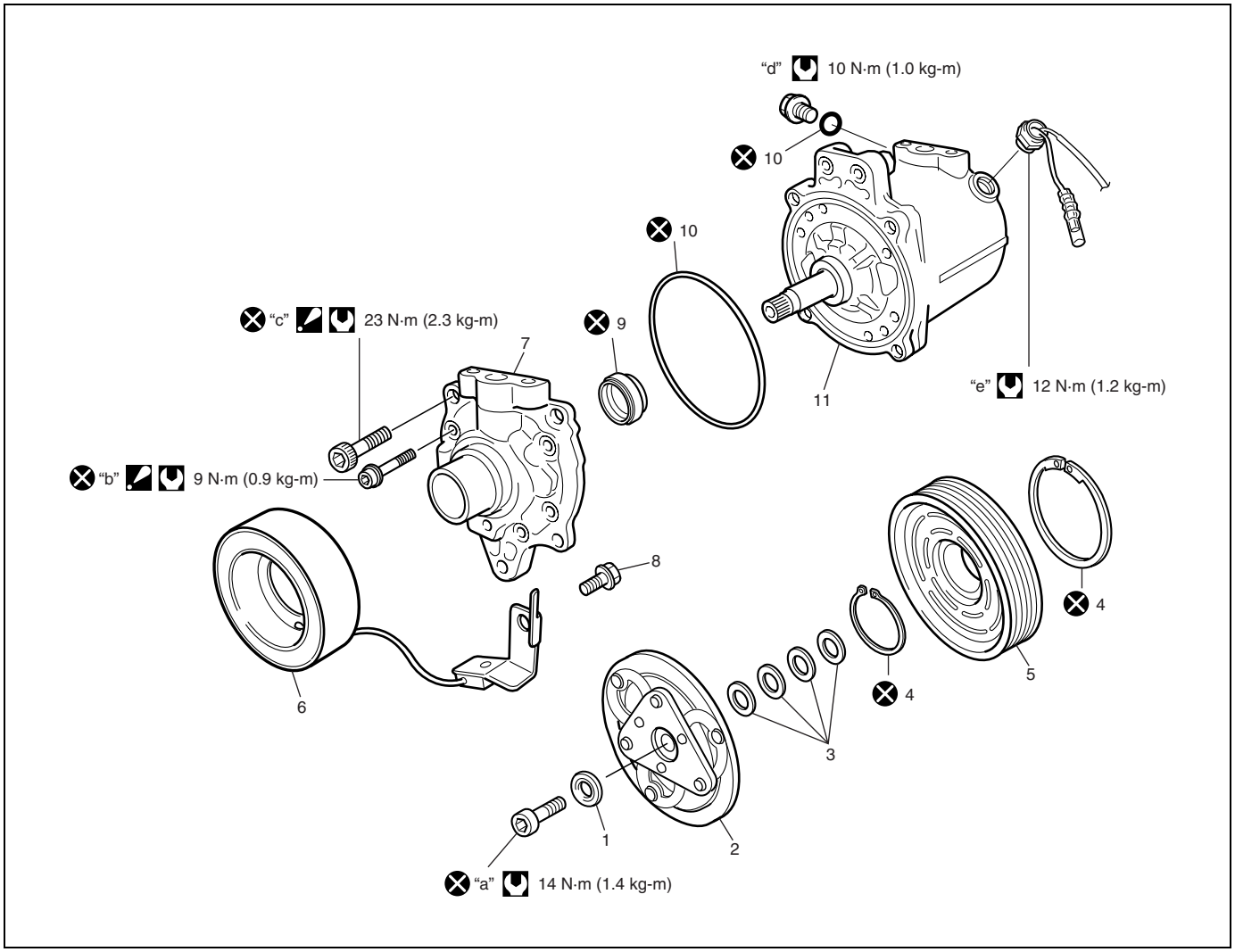

1. Washer	7. Front head	b. Front head bolt : Tighten bolt "c" first, and then "b".
2. Magnet clutch plate	8. Bolt	c. Front head bolt : Tighten bolt "c" first, and then "b".
3. Shim	9. Lip seal	d. Relief Valve
4. Circlip	10. O-ring	e. Thermal switch
5. Magnet clutch pulley	11. Compressor body assembly	Tightening torque
6. Magnet clutch coil	a. Magnet clutch plate bolt	Do not reuse.

Inspection

- Check magnet clutch plate and magnet clutch pulley for leaks of compressor oil.
- Check bearing of magnet clutch pulley for noise, wear and grease leakage.

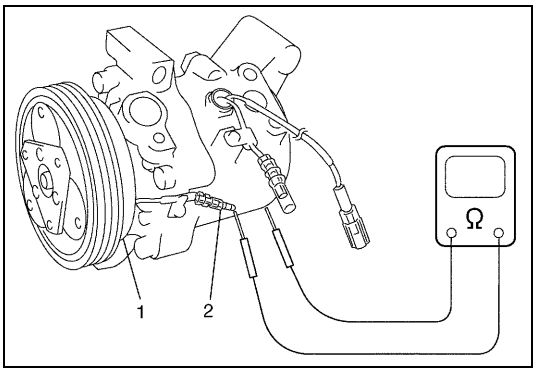

- Measure resistance of magnet clutch coil (1) between magnet clutch coil lead wire (2) and compressor body assembly. If measured resistance is not within tolerance, replace magnet clutch coil.

Magnet Clutch coil resistance
: 3.6 – 4.0 Ω at 20 °C (68 °F)

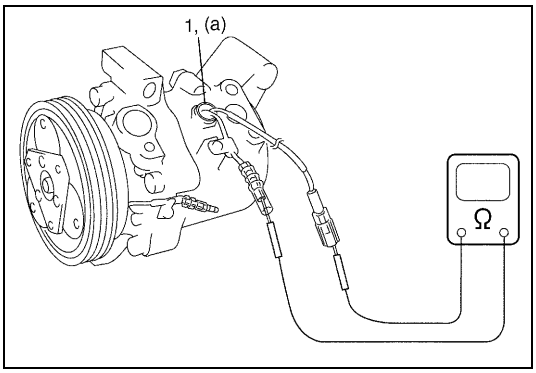

- Check thermal switch (1) for continuity using ohmmeter. If there is no continuity, replace thermal switch with new one.

Tightening torque
Thermal switch (a): 12 N·m (1.2 kg-m, 9.0 lb-ft)

Removal

1) Remove compressor from vehicle referring to “Compressor” in this section.

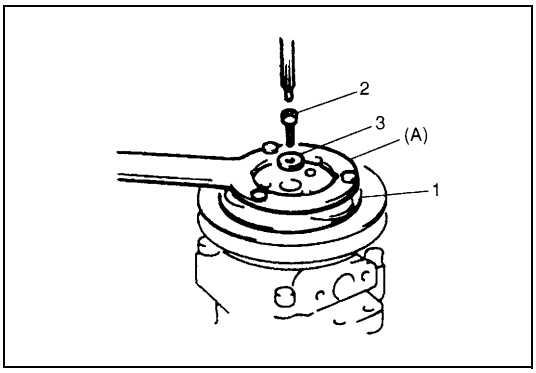

2) Fix magnet clutch plate (1) with special tool, and remove magnet clutch plate bolt (2) and washer (3).

Special tool
(A): 09991-06020

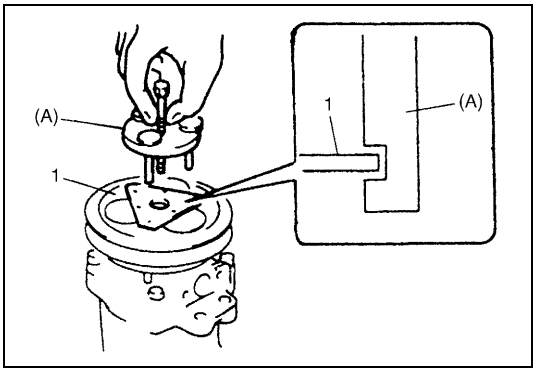

3) Remove magnet clutch plate (1) using special tool.

Special tool
(A): 09991-06030

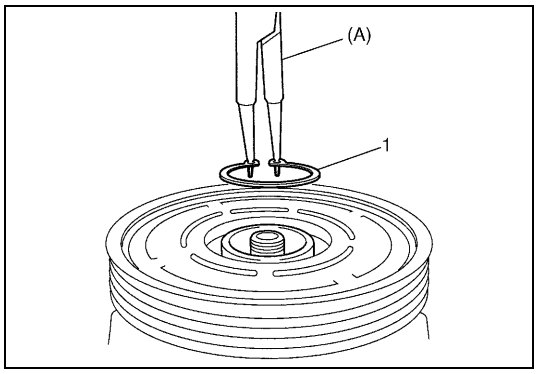

4) Remove circlip (1) using special tool.

Special tool
(A): 09900-06107

5) Remove a bolt for magnet clutch coil lead wire clamp, and disconnect magnet clutch lead wire.

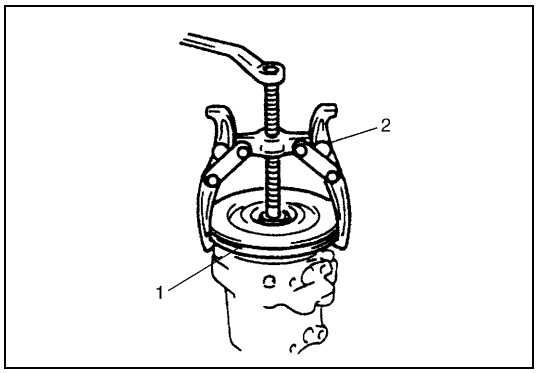

6) Remove magnet clutch pulley (1) by using a puller (2).

NOTE:

Put rag between magnet clutch pulley and puller not to damage magnet clutch pulley.

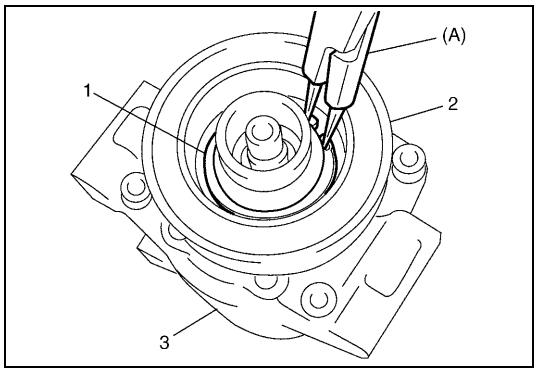

7) Remove circlip (1) using special tool.

Special tool
(A): 09900-06107

8) Remove magnet clutch coil (2) from compressor body assembly (3).

Installation

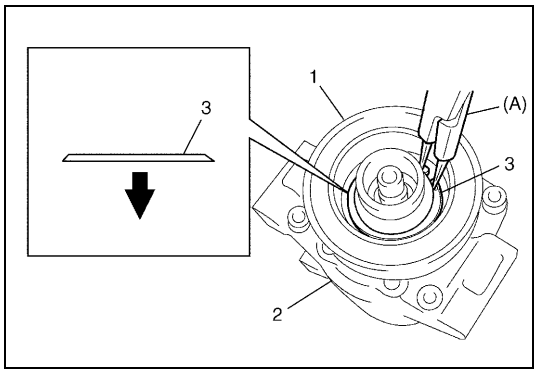

1) Install magnet clutch coil (1).

NOTE:

Protrusion on underside of magnet clutch coil (1) must match hole on compressor body assembly (2).

2) Install new circlip (3) to proper direction as shown using special tool.

Special tool
(A): 09900-06107

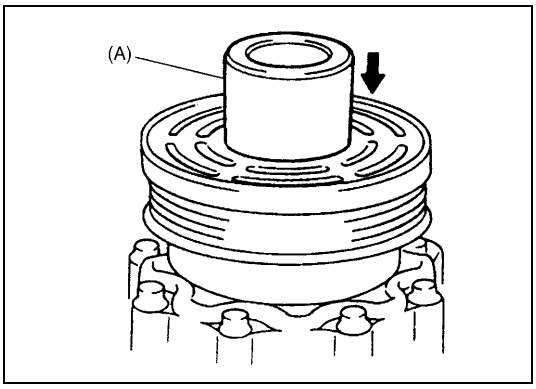

3) Install magnet clutch pulley.
   a) Set magnet clutch horizontally over magnet clutch pulley installation boss.
   b) Place special tool onto bearing of magnet clutch pulley by ensuring that edge of special tool rests only on inner race of bearing.

   Special tool
   (A): 09991-06010

   c) Press down special tool to arrow direction till it stops.

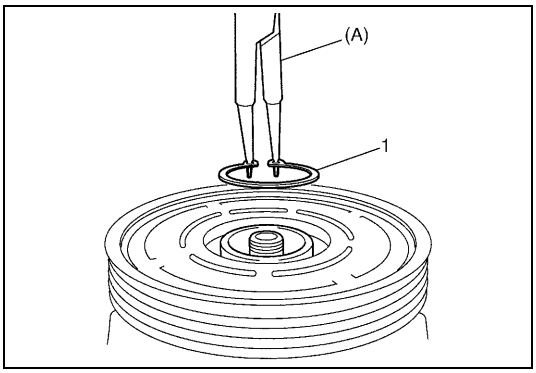

4) Install new circlip (1) using special tool.

   Special tool
   (A): 09900-06107

CAUTION:
Be careful not to scratch bearing seal.

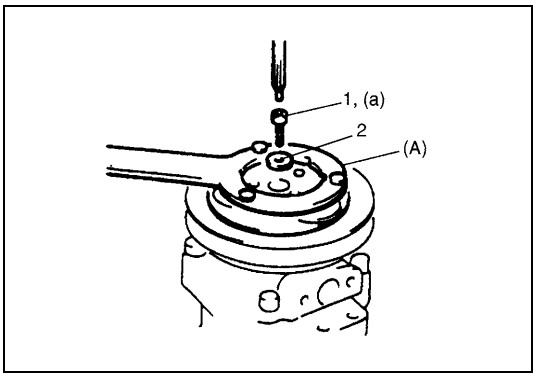

5) Tighten new magnet clutch plate bolt (1) with new washer (2) as specified torque.

   Tightening torque
   Magnet clutch plate bolt
   (a): 14 N·m (1.4 kg-m, 10.5 lb-ft)

   Special tool
   (A): 09991-06020

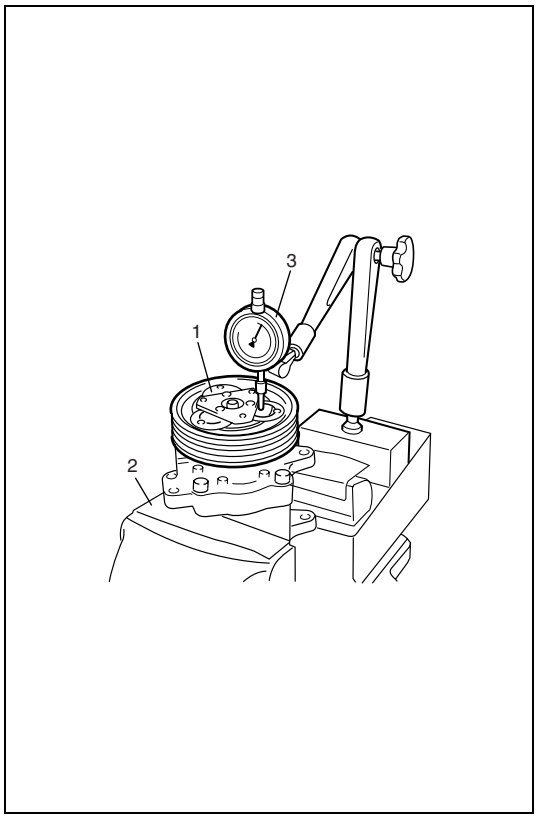

6) Adjust clearance between magnet clutch plate (1) and magnet clutch pulley by putting shim(s) on compressor shaft. To measure the clearance, perform the following steps.
   a) Put compressor in a vise (2).
   b) Set dial gauge (3) on magnet clutch plate, and then adjust its pointer at 0.
   c) Connect battery positive terminal (+) to magnet clutch coil lead wire.
   d) Connect battery negative terminal (–) to compressor body assembly. (At this point, magnet clutch plate and magnet clutch pulley are kept in contact.)
   e) Disconnect battery negative terminal (–) to compressor body assembly. (At this point, magnet clutch plate and magnet clutch pulley are not in contact.)
   f) Read stroke of magnet clutch plate from dial gauge by performing step d) and e) repeatedly. (Stroke of magnet clutch plate is clearance between magnet clutch plate and magnet clutch pulley.)

Standard clearance between magnet clutch plate and magnet clutch plate:
0.3 – 0.6 mm (0.012 – 0.024 in.)

Lip Seal

Removal

1) Remove magnet clutch assembly referring to “Magnet Clutch” in this section.

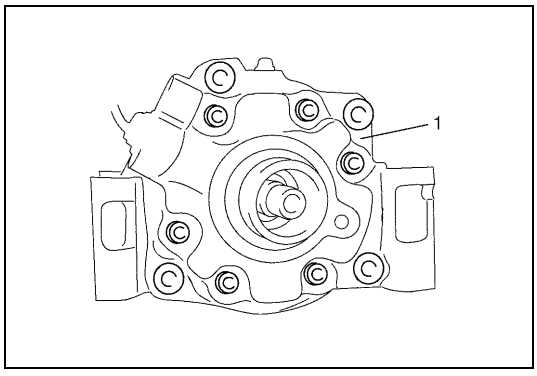

2) Remove ten front head mounting bolts.

1. Front head

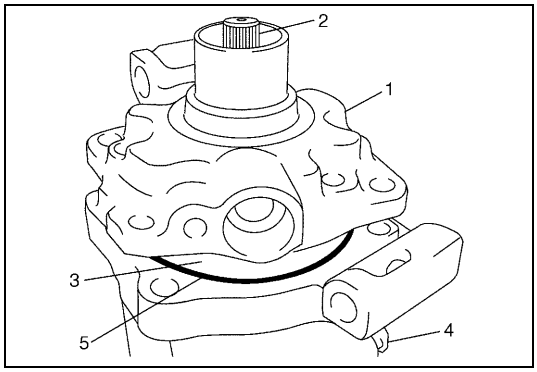

3) Remove front head (1) by pushing compressor shaft (2).

CAUTION:
- **Do not remove inner parts (3) from compressor body assembly (4).**
- **Do not leave any dust between front head and compressor body assembly.**

4) Remove O-ring (5).

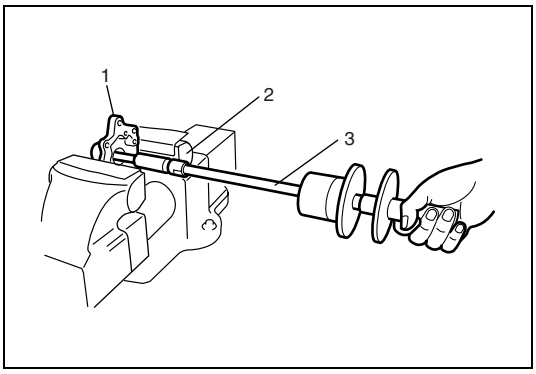

5) Remove lip seal from front head (1) using special tool.
If it is hard to remove lip seal, fix front head with soft plates on vise (2) and use sliding hammer (3) as shown.

Installation

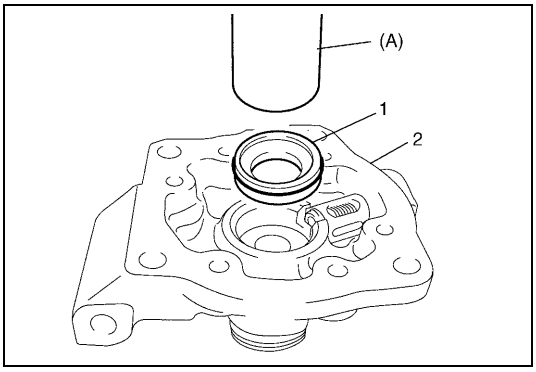

1) Press-fit new lip seal (1) into front head (2) using special tool.

Special tool
(A): 09991-06050

CAUTION:
Do not reuse lip seal (1) once removed from compressor.

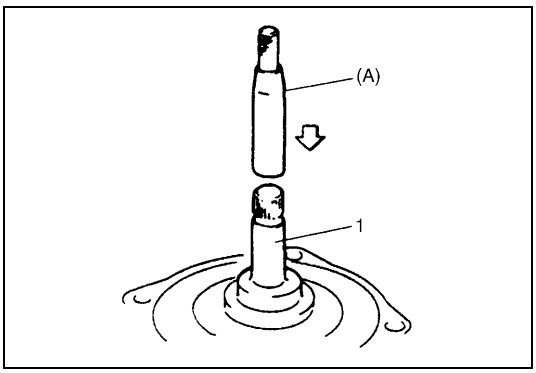

2) Apply compressor oil to surface of special tool, and then place it on compressor shaft (1).

Special tool
(A): 09991-06040

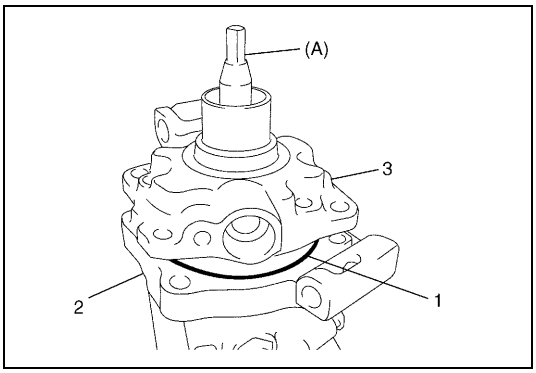

3) Install new O-ring (1) to compressor body assembly (2).
4) Apply compressor oil to lip seal and O-ring (1).
5) Install front head (3) to compressor body assembly (2).

Special tool
(A): 09991-06040

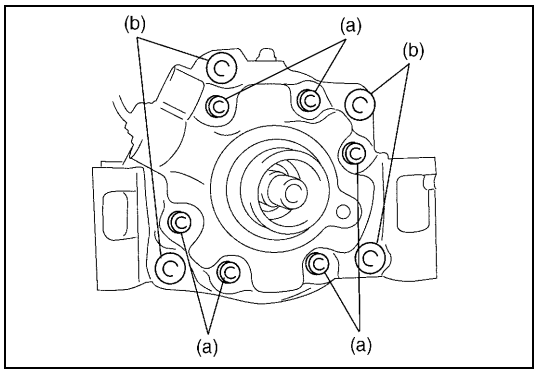

6) Tighter new bolts (a) with new washers to specified torque, and then tighten new bolts (b) to specified torque.

Tightening torque
Front heat bolts
(a): 9 N·m (0.9 kg-m, 6.5 lb-ft)
(b): 23 N·m (2.3 kg-m, 17.0 lb-ft)

Relief Valve

Inspection

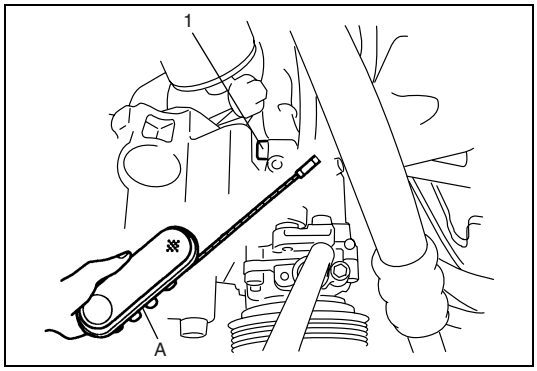

1) Operate A/C system.
2) Check if there is any refrigerant leakage from relief valve (1) using special tool.
3) If there is any refrigerant leakage, replace O-ring with new one. If refrigerant still leaks, replace relief valve with new one.

Special tool
(A): 09990-86011

Removal

1) Recover refrigerant referring to “Recovery” in this section.
2) Remove compressor from vehicle referring to “Compressor” in this section.
3) Remove relief valve with O-ring.

Installation

1) Apply compressor oil to new O-ring, and then install relief valve with the O-ring.

Tightening torque
Relief valve: 10 N·m (1.0 kg-m, 7.5 lb-ft)

2) Install compressor to vehicle referring to “Compressor” in this section.
3) Perform evacuating, and then charge refrigerant referring to “Evacuating” and “Charging” in this section.

Tightening Torque Specification

Fastening part	Tightening torque		
	N•m	kg-m	lb-ft
Refrigerant 8 mm pipe (0.31 in.)	13	1.3	9.5
Refrigerant 12 mm pipe (0.47 in.)	23	2.3	17.0
Refrigerant 14.5 mm pipe (0.57 in.)	33	3.3	24.0
Refrigerant pressure sensor	9	0.9	6.5
Magnet clutch plate bolt	14	1.4	10.5
Front head bolt (5 mm)	9	0.9	6.5
Front head bolt (8 mm)	23	2.3	17.0
Relief valve	10	1.0	7.5
Thermal switch	12	1.2	9.0
Compressor mounting bolt	28	2.8	20.5

Required Service Materials

Material	Recommended SUZUKI product (Part Number)	Use
Compressor oil (Refrigerant oil)	COMPRESSOR OIL RS20 (150 cc) 99000-99088-00D0	• O-ring • Each component

Special Tools

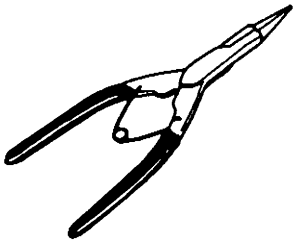	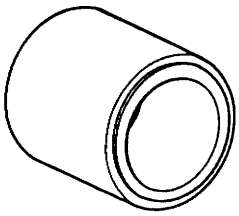	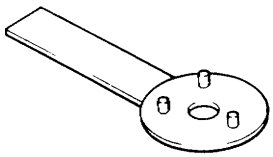	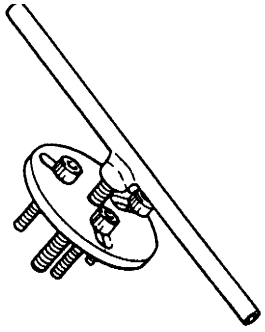
09900-06107 Snap ring pliers (Open type)	09991-06010 Magnet clutch pulley installer	09991-06020 Armature plate spanner	09991-06030 Armature plate remover
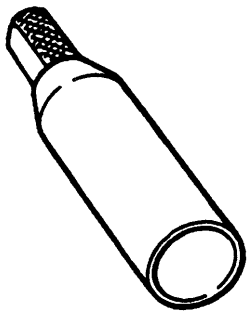	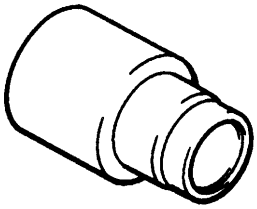	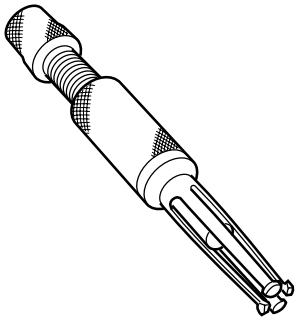	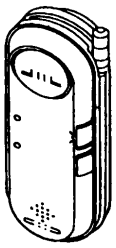
09991-06040 Lip type seal protector	09991-06050 Lip type seal installer	09921-26020 Bearing remover	09990-86011 Gas leak detector

SECTION 3B1

POWER STEERING (P/S) SYSTEM (If equipped)

WARNING:

For vehicles equipped with Supplemental Restraint (Air Bag) System:

- **Service on and around the air bag system components or wiring must be performed only by an authorized SUZUKI dealer. Refer to "Air Bag System Components and Wiring Location View" under "General Description" in air bag system section in order to confirm whether you are performing service on or near the air bag system components or wiring. Please observe all WARNINGS and "Service Precautions" under "On-Vehicle Service" in air bag system section before performing service on or around the air bag system components or wiring. Failure to follow WARNINGS could result in unintentional activation of the system or could render the system inoperative. Either of these two conditions may result in severe injury.**
- **Technical service work must be started at least 90 seconds after the ignition switch is turned to the "LOCK" position and negative cable is disconnected from the battery. Otherwise, the system may be activated by reserve energy in the Sensing and Diagnostic Module (SDM).**

NOTE:

- **For the items with asterisk (*) in the "CONTENTS" below, refer to the same section of the Service Manual mentioned in "FOREWORD" of this manual.**
- **All steering gear fasteners are important attaching parts in that they could affect the performance of vital parts and systems, and/or could result in major repair expense. They must be replaced with one of the same part number or with an equivalent part if replacement becomes necessary. Do not use a replacement part of lesser quality or substitute design. Torque values must be used as specified during reassembly to assure proper retention of these parts.**

CONTENTS

General Description 3B1-2
Diagnosis 3B1-3
Diagnosis Table 3B1-3
Steering Wheel Play Check ..... *
Steering Force Check ..... *
Power Steering Belt Check 3B1-5
Power Steering Fluid Level Check 3B1-5
Power Steering Fluid Leakage Check 3B1-6
Air Bleeding Procedure ..... *
Hydraulic Pressure In P/S Circuit Check 3B1-6
On-Vehicle Service 3B1-8
Power Steering System Components 3B1-8
Power Steering Belt 3B1-9
Power Steering (P/S) Pump 3B1-9
Power Steering (P/S) Gear Box ..... *
Tightening Torque Specifications 3B1-10
Required Service Materials 3B1-10
Special Tools 3B1-10

General Description

The power steering system in this vehicle reduces the driver's effort needed in turning the steering wheel by utilizing the hydraulic pressure generated by the power steering (P/S) pump which is driven by the engine. It is an integral type with the mechanical gear unit, hydraulic pressure cylinder unit and control valve unit all housed in the gear box.

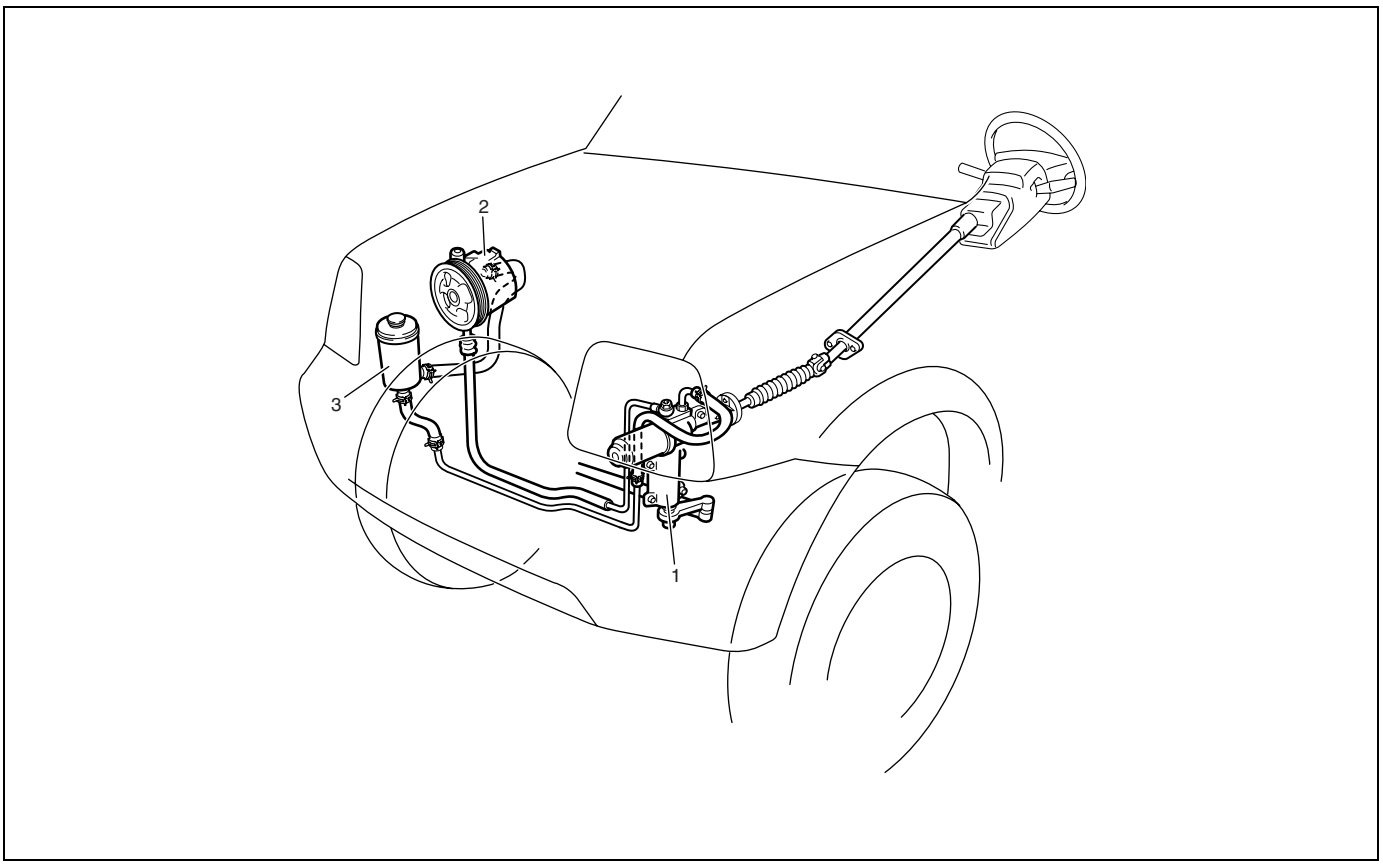

1. Steering gear box	2. Power steering (P/S) pump	3. P/S fluid reservoir

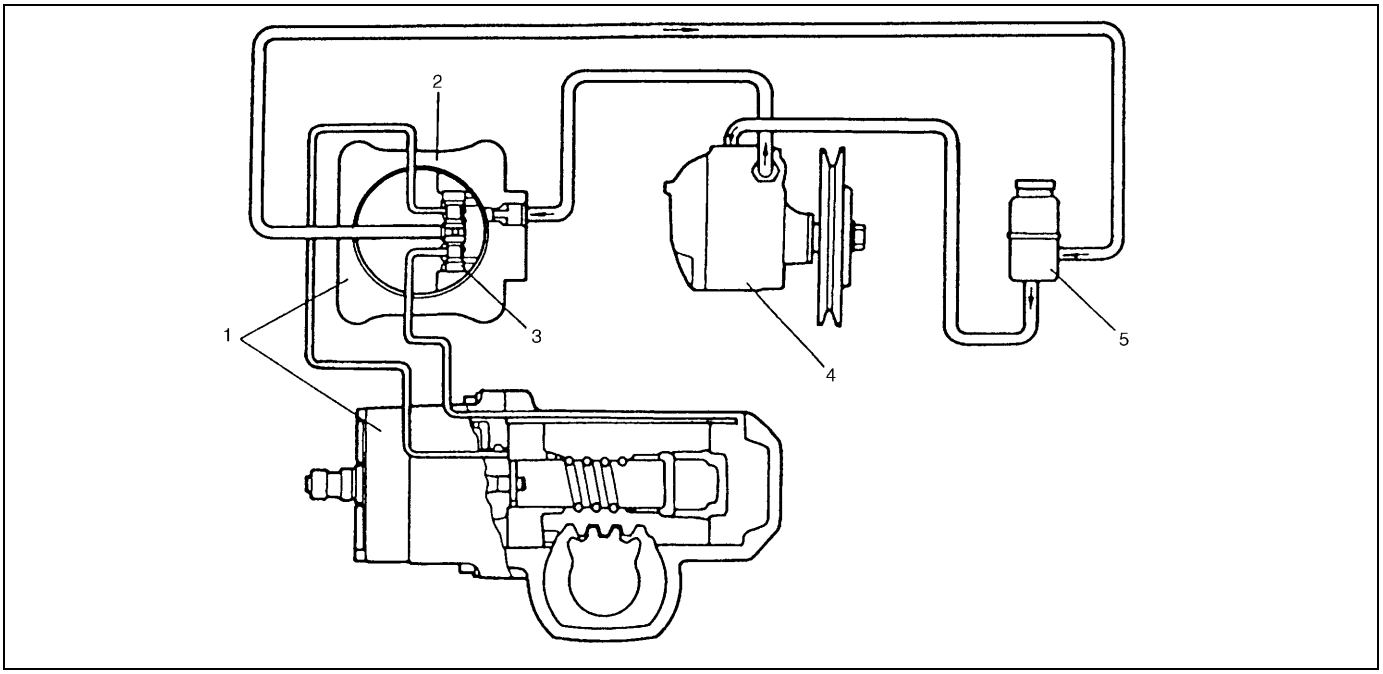

1. Power steering gear box	3. Spool valve	5. P/S fluid reservoir
2. Control valve section	4. Power steering (P/S) pump	

Diagnosis

Diagnosis Table

Condition	Possible Cause	Correction
Steering wheel feels heavy (at low speed)	Fluid deteriorated, low viscosity, different type of fluid mixed	Change fluid.
	Pipes or hoses deformed, air entering through joint	Correct or replace.
	Insufficient air bleeding from piping	Bleed air.
	Belt worn, lacking in tension	Replace belt.
	Tire inflation pressure too low	Inflate tire.
	Wheel alignment out of adjustment	Adjust front wheel alignment.
	Steering wheel installed improperly (twisted)	Install steering wheel correctly.
	Hydraulic pressure failing to rise (See NOTE “A”.)	Replace pump assembly.
	Slow hydraulic pressure rise (See NOTE “A”.)	
Steering wheel feels heavy momentarily when turning it to the left or right.	Air drawn in due to insufficient amount of fluid	Add fluid and bleed air.
	Slipping belt	Replace belt.

NOTE:

- **“A”: Be sure to warm up engine fully before performing this check. Pump vanes are sometimes hard to come out where temperature is low.**

Condition	Possible Cause	Correction
Steering wheel returns slowly from turns. (See NOTE “C”.)	Dust or foreign object mixed in fluid	Change fluid.
	Deformed pipes or hoses	Correct or replace.
	Steering column installed improperly	Install correctly.
	Wheel alignment maladjusted	Adjust.
	Linkage or joints not operating smoothly	Correct.
Vehicle pulls to one side during straight driving.	Low or uneven tire inflation pressure	Inflate tire(s) as necessary.
	Wheel alignment maladjusted	Adjust.
	Defective spool valve	Replace gear box assembly.
Steering wheel play is large and vehicle wanders.	Loose steering shaft nut	Retighten.
	Loose linkage or joint	Retighten.
	Loose gear box fixing bolt	Retighten.
	Front wheel bearing worn	Replace.
Fluid leakage	Loose joints of hydraulic pressure pipes and hoses	Retighten.
	Deformed or damaged pipes or hoses	Correct or replace.
	Gear box	Replace gear box assembly.

Condition	Possible Cause	Correction
Abnormal noise (See NOTE "D".)	Air drawn in due to insufficient fluid	Replenish fluid.
	Air drawn in through pipe or hose joints	Retighten or replace.
	Belt slipping (loose)	Replace belt.
	Worn belt	Replace belt.
	Loose steering linkage	Retighten.
	Loose gear box fixing bolt	Retighten.
	Loose pitman arm	Retighten.
	Pipes or hoses in contact with chassis	Correct.
	Defective pump vane	Replace pump assembly.
	Malfunction of flow control valve	Replace gear box assembly.
	Defective pump shaft bearing	Replace pump assembly.

NOTE:

- **"C": Turn steering wheel 90° at 35 km/h (22 mile/h) and let it free. If it returns more than 60° then, it is normal.**
- **"D": Some hissing noise may be heard through steering column when turning steering wheel with vehicle halted. It is from operation of the valve in the gear box and indicates nothing abnormal.**

Power Steering Belt Check

INSPECTION

Inspect belt for damage, deterioration, properly fitted in pulley groove and tension referring to “Generator Drive Belt Inspection” in Section 6H2.

Power Steering Fluid Level Check

CAUTION:

- **Make sure to use an equivalent of DEXRON®-II, DEXRON®-IIE or DEXRON®-III for P/S fluid.**
- **Fluid level should be checked when fluid is cool before starting engine.**

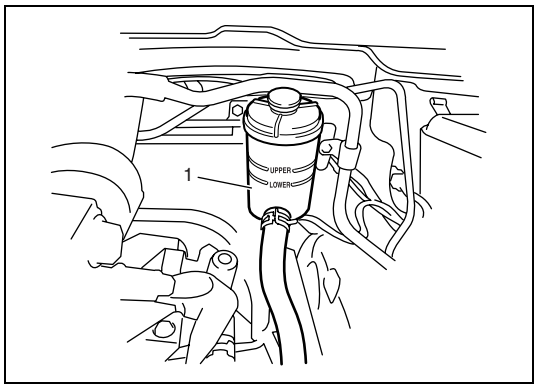

With engine stopped check fluid level indicated on P/S fluid reservoir (1), which should be between UPPER and LOWER marks. If it is lower than lower limit (LOWER), replenish fluid up to upper limit (UPPER) mark.

Power Steering Fluid Leakage Check

Start engine and turn steering wheel fully to the right and left so that maximum hydraulic pressure is applied to system. Then visually check gear box, P/S pump and P/S fluid reservoir respectively and each joint of hydraulic pressure piping for leakage. During this check, however, never keep steering wheel turned fully for longer than 10 seconds.

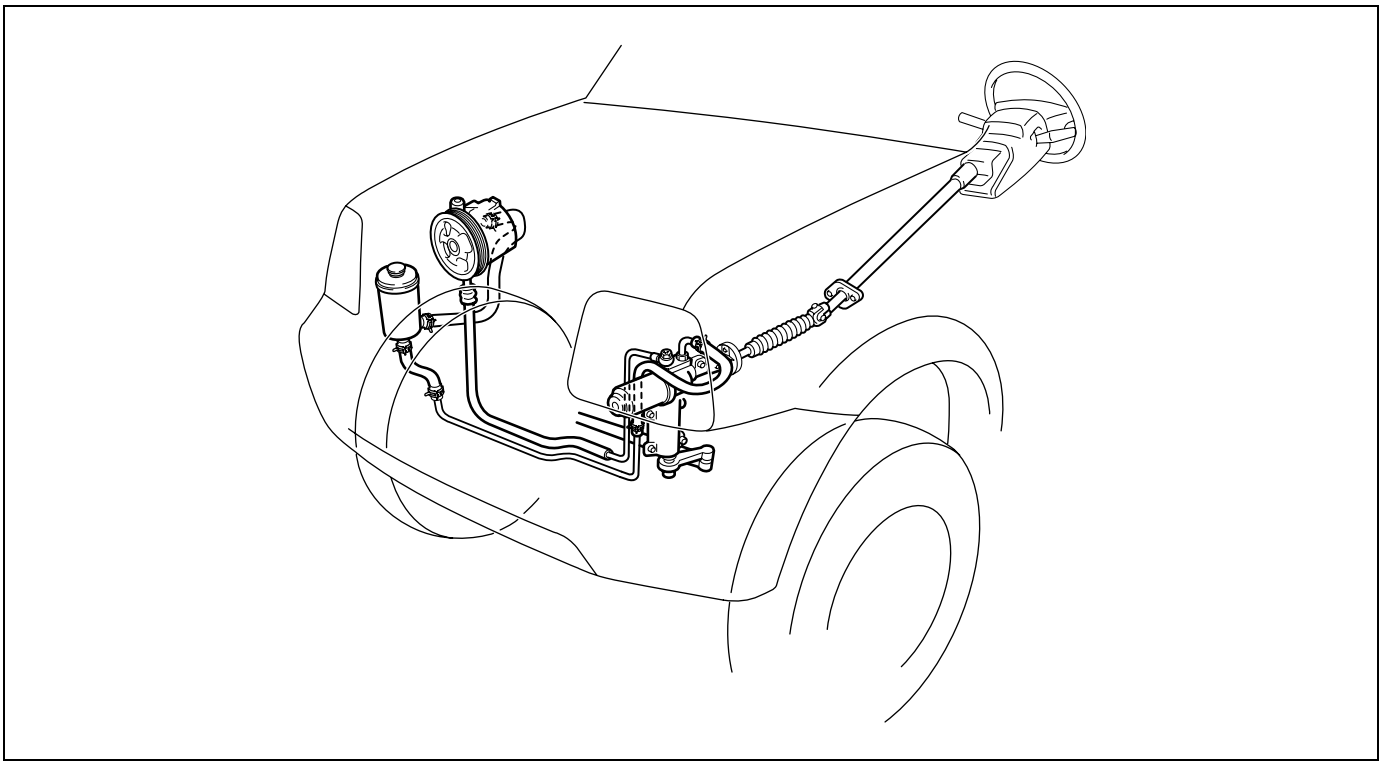

Hydraulic Pressure In P/S Circuit Check

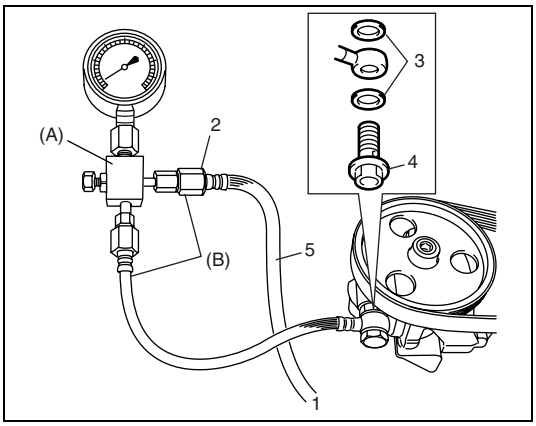

1) Clean where pipe is connected thoroughly, then disconnect high pressure hose from high pressure pipe connector and connect oil pressure gauge (special tool) as shown.

Special tool
(A): 09915-77412
(B): 09915-77420

1. To gear box	4. Union bolt
2. Attachment	5. Pressure hose
3. Washer	

2) Bleed air.

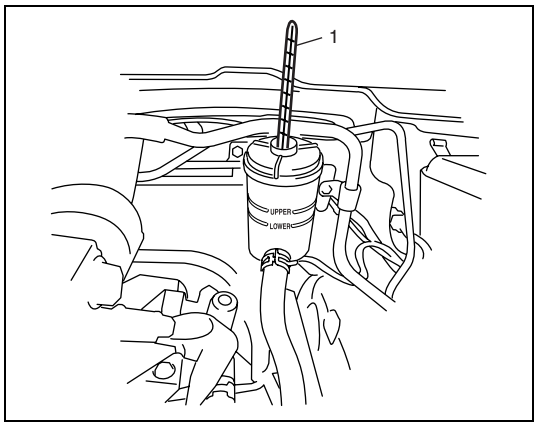

3) With engine running at idling speed, keep turning steering wheel to the right and left till fluid in P/S fluid reservoir is warmed to 50 to 60 °C (122 – 140 °F).

1. Thermometer	

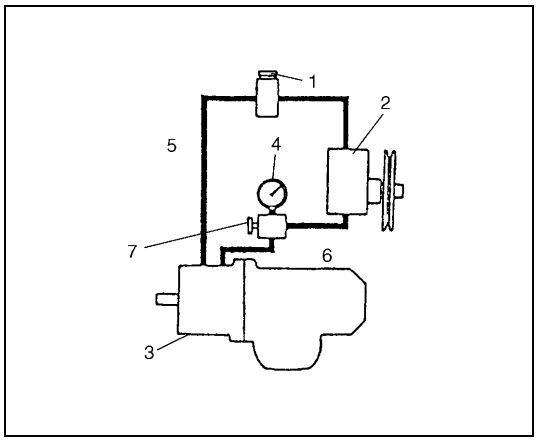

4) Back pressure check
With engine running at idling speed and hands off from steering wheel, check hydraulic pressure.
If back pressure exceeds 350 kPa (3.5 kg/cm^2, 50 psi), check control valve and pipes for obstruction.

Back pressure: 350 kPa (3.5 kg/cm^2, 50 psi)

1. P/S fluid reservoir	5. Low pressure side
2. P/S pump	6. High pressure side
3. Steering gear box	7. Valve (open)
4. Oil pump pressure gauge	

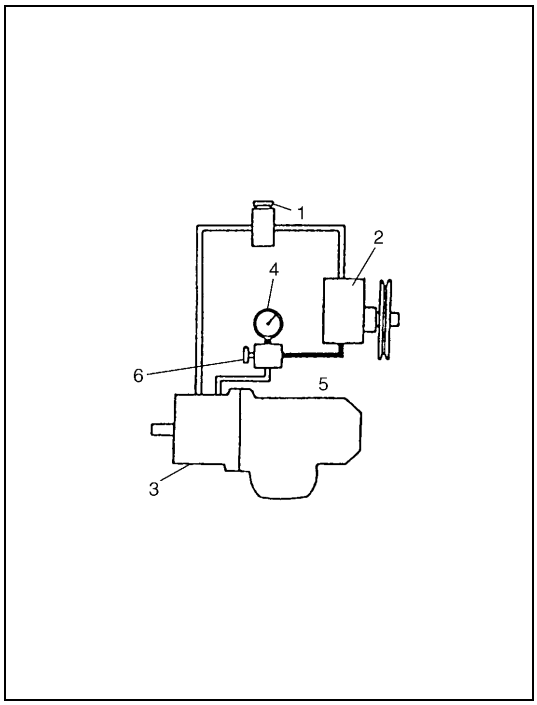

5) Relief pressure check

CAUTION:
- **Be sure not to keep gauge valve closed for longer than 10 seconds.**
- **Never keep steering wheel turned fully for longer than 10 seconds.**

a) Increase engine speed to about 1,500 to 1,600 rpm.
Close valve (6) gradually while watching pressure increase indicated on gauge (4) and take reading of relief pressure (maximum hydraulic pressure).
If relief pressure is not as specified, replace P/S pump.

Relief pressure

8,400 – 9,100 kPa (85 – 92 kg/cm^2, 1208 – 1308 psi)

1. P/S fluid reservoir	3. Steering gear box
2. P/S pump	5. High pressure side

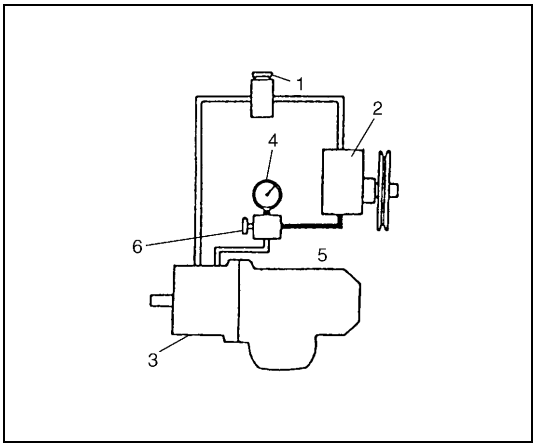

b) Next, open gauge valve (6) fully and increase engine speed to about 1,500 to 1,600 r/min. Then turn steering wheel to the left or right fully and take reading of relief pressure.

If lower than 8,400 kPa (85 kg/cm^2, 1208 psi), failure in steering gear.

Relief pressure

8,400 – 9,100 kPa (85 – 92 kg/cm^2, 1208 – 1308 psi)

1. P/S fluid reservoir	4. Oil pressure gauge
2. P/S pump	5. High pressure side
3. Steering gear box	

On-Vehicle Service

Power Steering System Components

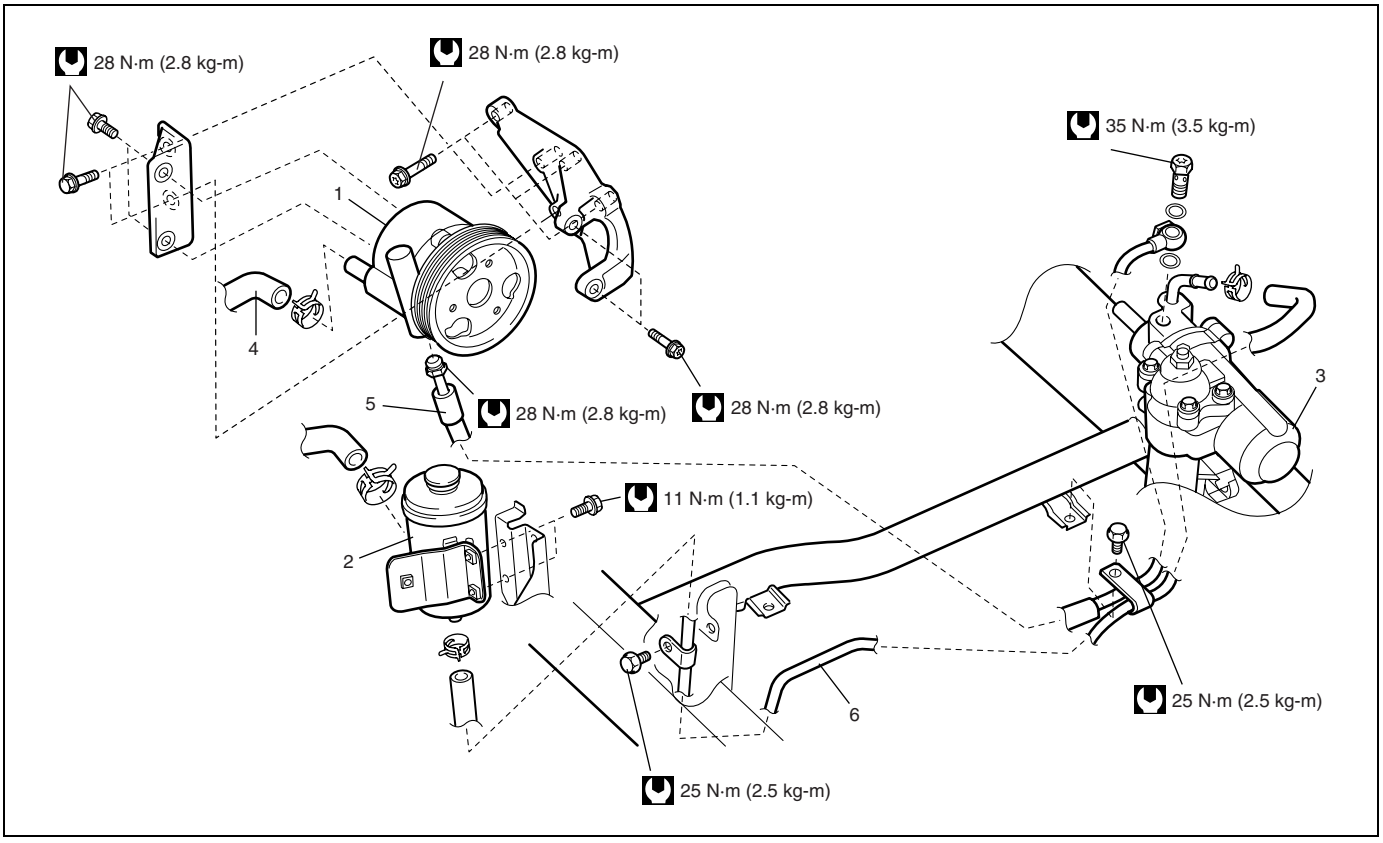

1. Power steering (P/S) pump	3. Steering gear box	5. High pressure hose / pipe
2. P/S fluid reservoir	4. Suction hose	6. Low pressure hose / pipe

Power Steering Belt

For removal and installation of power steering belt, refer to "Generator Drive Belt Removal and Installation" in Section 6H2.

Power Steering (P/S) Pump

REMOVAL

1) Take out fluid in P/S fluid reservoir with syringe or such.
2) Remove P/S belt referring to "Generator Drive Belt Removal and Installation" in Section 6H2.
3) Disconnect high pressure hose and low pressure hose.
4) Remove P/S pump (1) removing 4 mounting bolts (3).

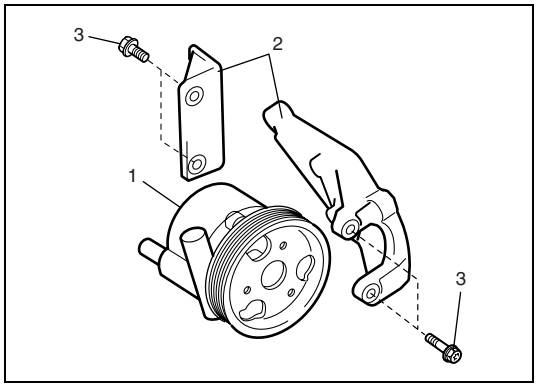

CAUTION:
- **Clean couplers at intake and discharge ports completely before disconnection.**
- **Plug ports of removed pump to prevent dust and any foreign object from entering.**

2. P/S pump bracket

INSTALLATION

CAUTION:
After installation, fill A/T fluid (an equivalent to DEXRON®-II, DEXRON®-IIE or DEXRON®-III) and be sure to bleed air referring to "Air Bleeding Procedure" in this section.

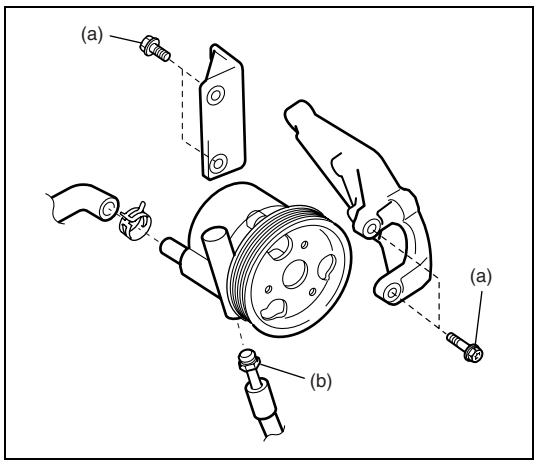

Install components in reverse order of removal procedure noting the following points.

- Tighten each bolt as specified below.

Tightening torque
Oil pump mounting bolts
(a): 28 N·m (2.8 kg-m, 20.0 lb-ft)
Oil pump high pressure flare nut
(b): 28 N·m (2.8 kg-m, 20.0 lb-ft)

- Install P/S belt referring to "Generator Drive Belt Removal and Installation" in Section 6H2.

Tightening Torque Specifications

Fastening part	Tightening torque		
	N•m	kg-m	lb-ft
Oil pump mounting bolt	28	2.8	20.0
Oil pump high pressure flare nut	28	2.8	20.0

Required Service Materials

Material	Recommended SUZUKI product (Part Number)	Use
Power steering fluid	An equivalent of DEXRON®-II, DEXRON®-IIE or DEXRON®-III.	• To fill P/S fluid reservoir • Parts lubrication when installing

Special Tools

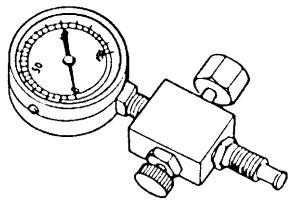	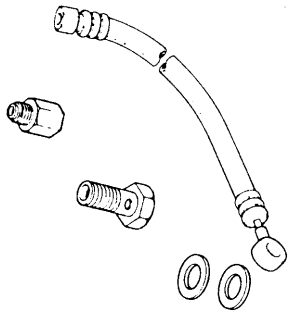	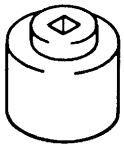	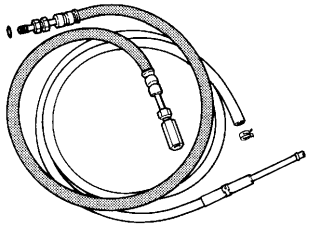
09915-77412 Oil pressure gauge	09915-77420 Oil pressure gauge attachment & hose set	09944-18211 Torque check socket	09945-35010 Air bleeding hose set

SECTION 3C

STEERING WHEEL AND COLUMN

WARNING:

For vehicles equipped with Supplemental Restraint (Air Bag) System:

- **Service on and around the air bag system components or wiring must be performed only by an authorized SUZUKI dealer. Please observe all WARNINGS and "Service Precautions" under "On-Vehicle Service" in air bag system section before performing service on or around the air bag system components or wiring. Failure to follow WARNINGS could result in unintentional activation of the system or could render the system inoperative. Either of these two conditions may result in severe injury.**
- **The procedures in this section must be followed in the order listed to temporarily disable the air bag system and prevent false diagnostic codes from setting. Failure to follow procedures could result in possible air bag system activation, personal injury or otherwise unneeded air bag system repairs.**

CAUTION:

When fasteners are removed, always reinstall them at the same location from which they were removed. If a fastener needs to be replaced, use the correct part number fastener for that application. If the correct part number fastener is not available, a fastener of equal size and strength (or stronger) may be used. Fasteners that are not reused, and those requiring thread-locking compound, will be called out. The correct torque value must be used when installing fasteners that require it. If the above procedures are not followed, parts or system damage could result.

NOTE:

For the items with asterisk (*) in the "CONTENTS" below, refer to the same section of the Service Manual mentioned in FOREWORD of this manual.

CONTENTS

General Description ..... *
Diagnosis ..... *
Inspection and Repair Required After Accident ..... *
On-Vehicle Service ..... *
Service Precautions (For Vehicle with Air Bag System) ..... *
Diagnosis and servicing ..... *
Enabling air bag system ..... *
Handling and storage ..... *
Disposal ..... *
Drive Air Bag (Inflator) Module (For Vehicle with Air Bag System) ..... *
Steering Wheel ..... *
Centering contact coil (for vehicle with air bag system) ..... *
Combination Switch (For Vehicle without Air Bag System)/Contact Coil and Combination Switch Assembly (For Vehicle with Air Bag System) ..... *
Steering Column Assembly ..... *
Steering Lock Assembly (Ignition Switch) ..... *
Steering Lower Shaft ..... *
Checking Steering Column for Accident Damage 3C-2
Tightening Torque Specifications ..... *
Required Service Material ..... *
Special Tool ..... *

Checking Steering Column for Accident Damage

NOTE:

Vehicles involved in accidents resulting in body damage, where steering column has been impacted (or air bag deployed) may have a damaged or misaligned steering column.

CHECKING PROCEDURE

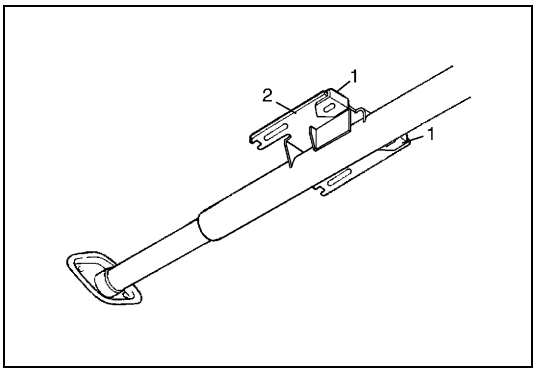

1) Check that two capsules (1) are attached to steering column bracket (2) securely. Check clearance between capsules (1) and steering column bracket (2). Clearance should be 0.0 mm (0.0 in.) on both sides.
   If found loose or clearance, replace steering column assembly.

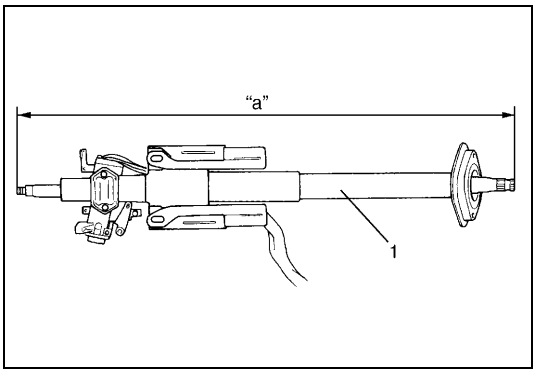

2) Take measurement "a" as shown.
   If it is shorter than specified length, replace column assembly (1) with new one.

   Steering column assembly length
   "a": 733.2 – 734.8 mm (28.87 – 28.93 in.)

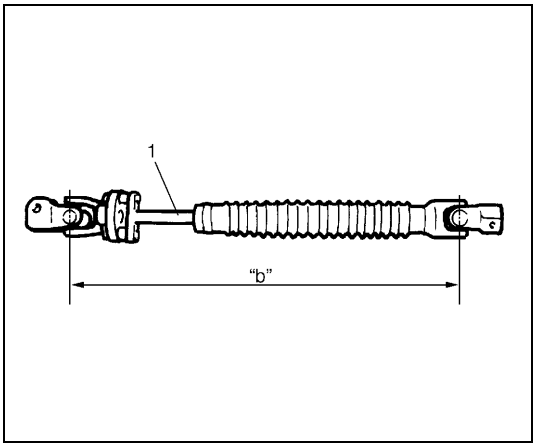

3) Check if steering lower shaft (1) is within specified length.
   If it is out of specified length, replace it with new one.

   Steering lower shaft length
   "b": 431.2 – 433.2 mm (16.98 – 17.05 in.)

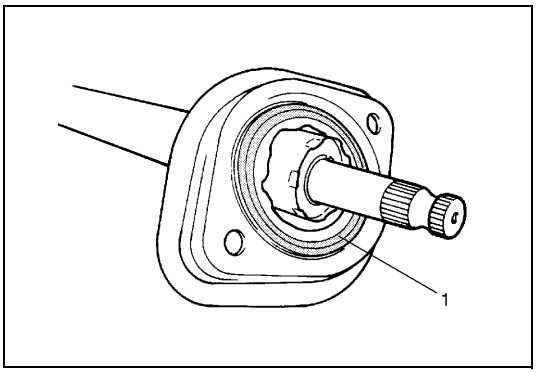

4) Check steering column lower seal (1) for breakage or deformation.
   If found defective, replace.

5) Check steering shaft joints and shaft for any damages such as crack, breakage, malfunction or excessive play.
   If anything is found faulty, replace as lower joint assembly or column assembly.
6) Check steering shaft for smooth rotation.
   If found defective, replace as column assembly.
7) Check steering shaft and column for bend, cracks or deformation.
   If found defective, replace.

SECTION 3D

FRONT SUSPENSION

WARNING:
For lifting point of vehicle, refer to "Vehicle Lifting Points" in Section 0A.

NOTE:

- **All front suspension fasteners are an important attaching part in that it could affect the performance of vital parts and systems, and/or could result in major repair expense. They must be replaced with one of the same part number or with an equivalent part if replacement becomes necessary. Do not use a replacement part of lesser quality or substitute design. Torque values must be used as specified during reassembly to assure proper retention of this part.**
- **Never attempt to heat, quench or straighten any front suspension part. Replace it with a new part or damage to the part may result.**
- **For the items with asterisk (*) in the "CONTENTS" below, refer to the same section of the Service Manual mentioned in "FOREWORD" of this Manual.**

CONTENTS

General Description 3D-2
4WD Control System 3D-2
Diagnosis 3D-7
Diagnosis Table 3D-7
4WD Controller and its Circuit Check 3D-9
4WD Control System Check 3D-10
Stabilizer bar / bushing check ..... *
Shock Absorber and/or Coil Spring Check ..... *
Leading Arm / Lateral Rod / Steering Knuckle Check ..... *
Leading Arm Bushing / Lateral Rod Bushing Check ..... *
Kingpin / Kingpin Bearing Check ..... *
Barfield Joint Check ..... *
Steering Knuckle Seal Check ..... *
Wheel Disc, Nut and Bearing Check ..... *
On-Vehicle Service 3D-13
Stabilizer Bar / Bushings 3D-13
Front Shock Absorber ..... *
Coil Spring ..... *
Bump Stopper and Spring Upper Seat ..... *
Wheel Hub / Bearing / Oil Seal ..... *
Steering Knuckle / Wheel Spindle ..... *
Front Axle Shaft / Oil Seal / Kingpin Bearing Outer Race ..... *
Steering Knuckle Seal ..... *
Lateral Rod ..... *
Leading Arm / Bushing 3D-14
Front Axle Housing ..... *
Tightening Torque Specifications ..... *
Required Service Material ..... *
Special Tool 3D-16

General Description

4WD Control System

The 4WD control system consists of a 4WD switch, a vacuum switch, vacuum pump, two vacuum switching valves (VSV1 and VSV2) and air locking hub assemblies.
The 4WD controller controls locking or unlocking of the air locking hub according to operation of the transfer shift control lever.
Vacuum generated by vacuum pump passes through the vacuum control valve which regulate vacuum pressure. According to signals from the 4WD switch, the 4WD controller activates VSV1 (for unlocking) or VSV2 (for locking) to apply vacuum from vacuum pump so that the front axle and the wheel hub are disengaged or engaged.

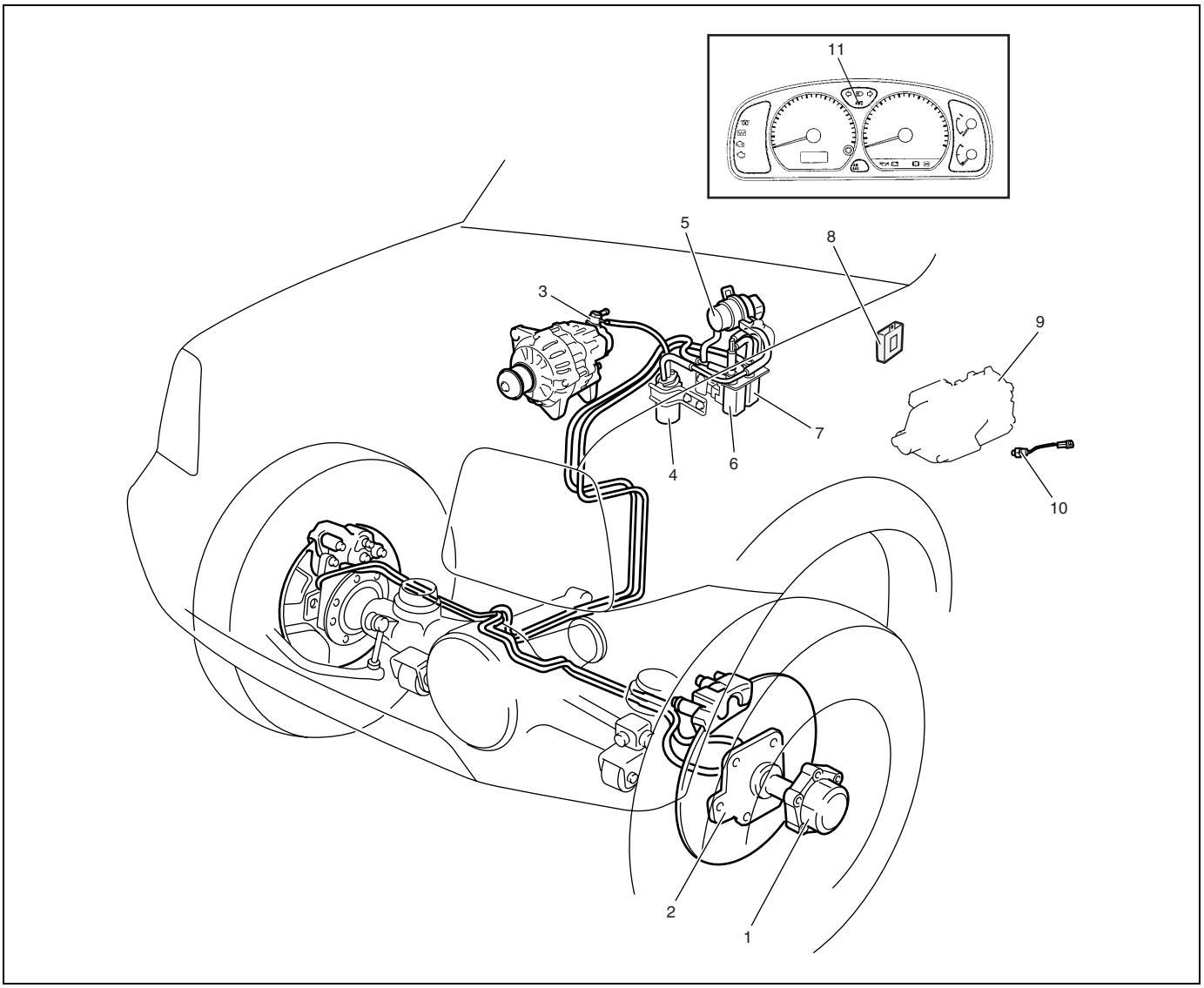

1. Air locking hub assembly	4. Vacuum control valve	7. VSV2	10. 4WD switch
2. Wheel spindle	5. Vacuum switch	8. 4WD controller	11. 4WD indicator light
3. Vacuum pump with generator	6. VSV1	9. Transfer	

System Circuit

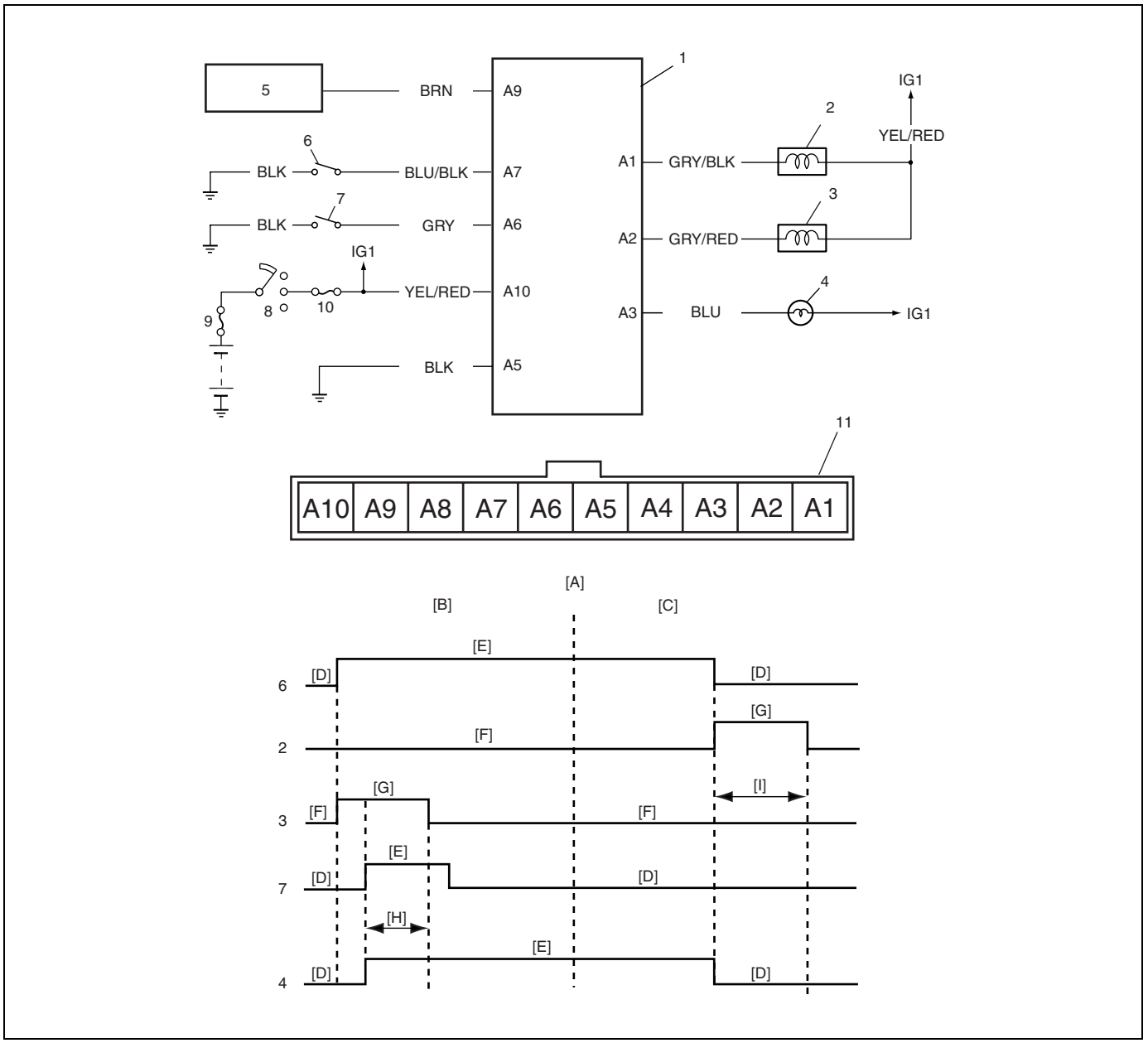

[A]: Operation	[F]: CLOSE	2. VSV1	7. Vacuum switch
[B]: 2WD → 4WD	[G]: OPEN	3. VSV2	8. IG switch
[C]: 4WD → 2WD	[H]: 5 sec.	4. 4WD indicator lamp	9. Main fuse
[D]: OFF	[I]: 10 sec.	5. ECM	10. IG fuse
[E]: ON	1. 4WD controller	6. 4WD switch	11. Coupler of 4WD controller

Components and Functions

Component	Function
4WD switch	When the transfer shift lever is shifted to 4L or 4H position from 2H, this switch turns ON and cause the 4WD control system to turn ON.
4WD controller	When the 4WD switch turns on, the 4WD controller activates VSV2 to lock the air locking hubs and when it receives an “ON” signal from the vacuum switch, it makes VSV2 to complete operation within 5 seconds and causes the 4WD indicator light to light up. If vacuum in the vacuum circuit fails to reach the specified level due to a leakage in the vacuum circuit (when no “ON” signal is inputted from the vacuum switch), the 4WD controller stops operation of VSV2 in 15 seconds and makes the 4WD indicator light to flash to warn occurrence of a trouble. When the 4WD switch turns off, the 4WD controller activates VSV1 for 10 seconds to unlock the hubs and at the same time makes the 4WD indicator light turn off.
VSV1	VSV1 operates according to the signal from the 4WD controller. When it is activated, the port opens and vacuum is applied through the vacuum circuit to unlock to the slide gear in the air locking hub. As a result, the air locking hubs are unlocked.
VSV2	VSV2 operates according to the signal from the 4WD controller. When it is activated, the port opens and vacuum is applied through the vacuum circuit to lock to the slide gear in the air locking hub. As a result, the air locking hubs are locked.
Vacuum switch	When VSV2 receives the “ON” signal from 4WD switch, vacuum is applied through its circuit to the vacuum switch. The vacuum switch turns on when it detects vacuum exceeding –36kpa (–5.22psi).
“4WD” indicator lamp	It lights up when 4WD control system is in the 4WD mode. It flashes to warn that locking hub operation has not completed (4WD control system fails to shift 4WD).
Vacuum pump	This vacuum pump is installed in the generator, and driven with the engine through the generator drive belt. 4WD control system and brake booster operate by the vacuum made with the vacuum pump.
Vacuum control valve	The vacuum made with the vacuum pump is adjusted to appropriate vacuum. As a result, 4WD control system is prevented being damaged by excessive vacuum.

Operation

2WD → 4WD

When the transfer shift control lever is shifted from the 2WD (2H) position to the 4WD (4H or 4L) position, a 4WD "ON" signal is transmitted to the 4WD controller which then activates VSV2 to apply vacuum from vacuum pump to the chamber "B" in the hub housing.

When vacuum is applied, the slide gear is separated from the magnet, moves toward the center of the vehicle body and gets engaged with the outer gear. In this way, the front axle shaft and the front wheel hub rotate as one unit.

If vacuum in the circuit fails to reach –36kpa (–5.22psi) within 15 seconds after operation of VSV2 due to such trouble as a hole in the vacuum pipe, the slide gear does not operate and the 4WD indicator light flashes to warn that the hub is unlocked.

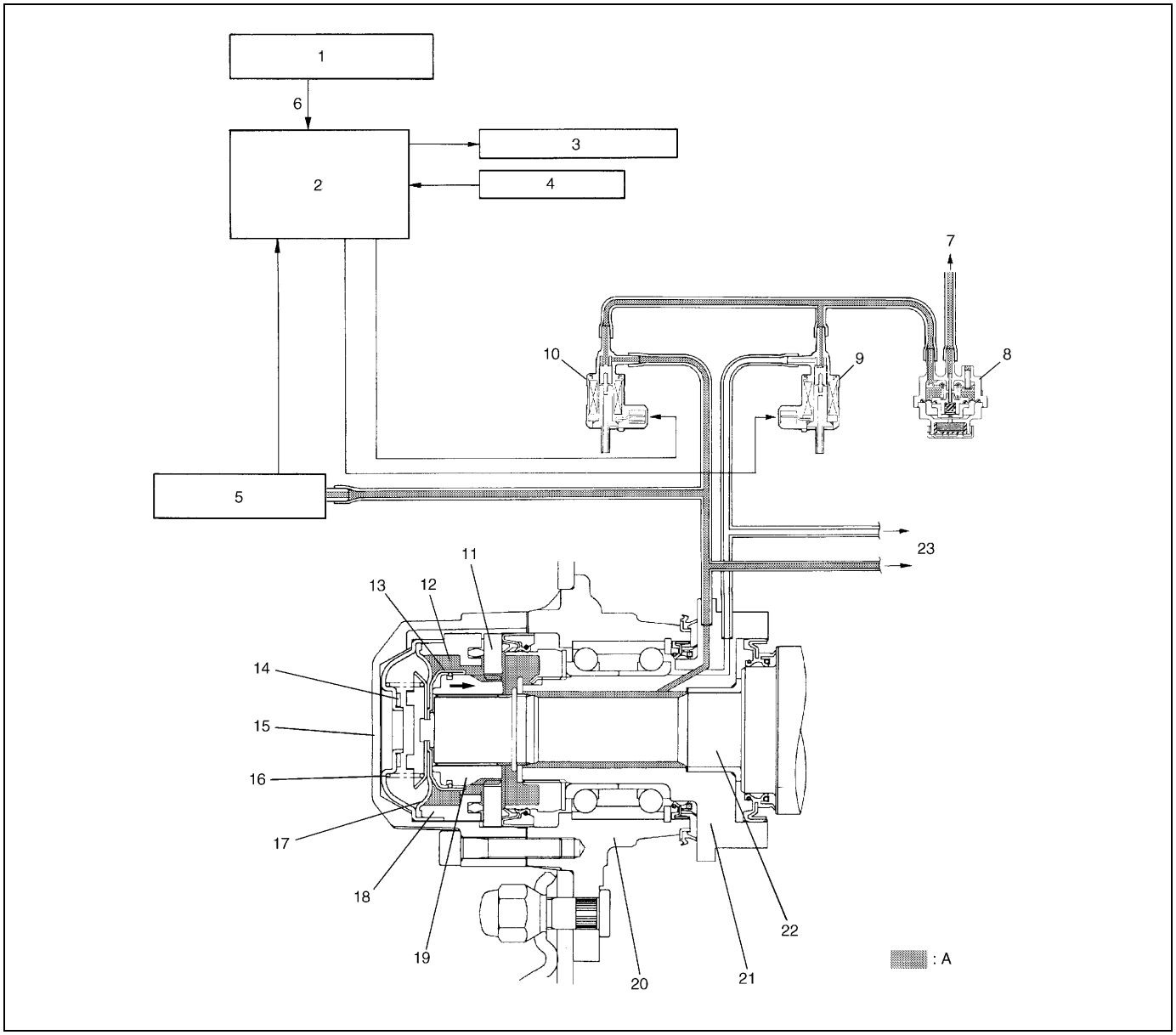

1. ECM	7. To vacuum pump	13. Piston A	19. Slide gear
2. 4WD controller	8. Vacuum control valve	14. Magnet	20. Wheel hub
3. 4WD indicator lamp	9. VSV1	15. Housing	21. Spindle
4. 4WD switch	10. VSV2	16. Spring	22. Front axle shaft
5. Vacuum switch	11. Outer gear	17. Diaphragm	23. To opposite side
6. Engine speed signal	12. Chamber B	18. Sleeve	A: Vacuum circuit

4WD → 2WD

When the transfer shift control lever is shifted from the 4WD (4H or 4L) to the 2WD (2H) position, the 4WD controller activates VSV1 and the vacuum from vacuum pump is applied to the chamber “A” in the hub housing. As the slide gear is shifted to the wheel side by the vacuum force and disengaged from the outer gear, rotation of the front wheel hub is not transmitted to the front axle shaft.

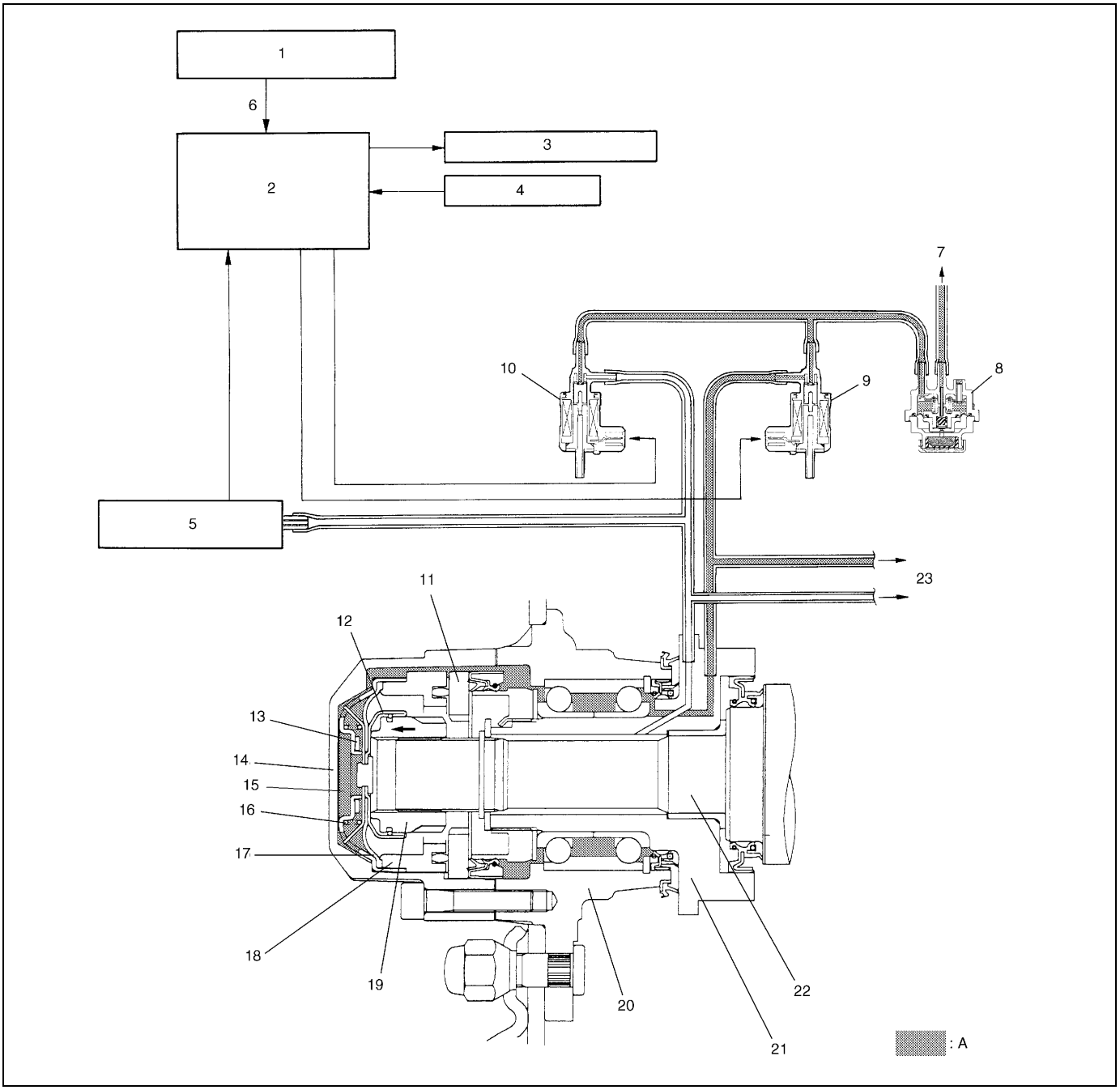

1. EPI & A/C controller	7. To vacuum pump	13. Magnet	19. Slide gear
2. 4WD controller	8. Vacuum control valve	14. Housing	20. Wheel hub
3. 4WD indicator lamp	9. VSV1	15. Chamber A	21. Spindle
4. 4WD switch	10. VSV2	16. Spring	22. Front axle shaft
5. Vacuum switch	11. Outer gear	17. Diaphragm	23. To opposite side
6. Engine speed signal	12. Piston A	18. Sleeve	A: Vacuum circuit

Diagnosis

Diagnosis Table

For description not found in the table below, refer to “Diagnosis Table” in Section 3.

4WD Control System

Condition	Possible Cause	Correction
4WD Indicator light flashing	• Hub locking procedure error	Shift transfer shift control lever 2WD → 4WD once again
	• Defective VSV2	Replace
	• Defective vacuum switch	Replace
	• Defective vacuum control valve	Replace
	• Air leak from vacuum circuit	Check and repair
	• Clogged vacuum hose or pipe	Replace
	• Defective vacuum pump	Check and replace
	• Faulty 4WD controller	Check and replace
2WD/4WD switching error	• Defective air locking hub assembly	Replace
	• Abnormality in 4WD control system	Inspect referring to “4WD Control System Diagnostic Flow Table”
	• Air leakage from vacuum circuit	Check and replace
	• Clogged vacuum hose or pipe	Replace
	• Defective vacuum control valve	Replace
	• Defective vacuum pump	Check and replace

4WD Control System Diagnostic Flow Table

Before performing the trouble diagnosis, check that the air locking hub assemblies are in good condition and there is no air leakage from vacuum hoses and vacuum pipe. Refer to “4WD Control System Check” in this section for air leakage.

[NOTES ON SYSTEM CIRCUIT INSPECTION]

- Be sure to read “Precautions for Electrical Circuit Service” in Section 0A before circuit inspection and observe what is written there.
- For system circuit, refer to the figure of “System Circuit” in this section.

Step	Action	Yes	No
1	Check ground circuit. 1) Disconnect coupler from 4WD controller with ignition switch OFF. 2) Check for proper connection to 4WD controller at all terminals. 3) If OK, check continuity between A5 terminal and body ground. Is there continuity between A5 terminal and body ground?	Go to Step 2.	“BLK” wire is open.
2	Check power circuit. 1) Disconnect coupler from 4WD controller. 2) Turn ignition switch ON. 3) Check voltage between A10 terminal and ground. Is it 10 – 14 V?	Go to Step 3.	“YEL/RED” circuit is open or short to ground.

Step	Action	Yes	No
3	Check 4WD switch circuit. 1) Connect coupler to 4WD controller. 2) Turn ignition switch ON and check voltage between A7 terminal and ground. **Transfer lever is in 2H: about 10 – 14 V** **Transfer lever is in 4L or 4H: about 0 V** Is check result satisfactory?	Go to Step 4.	Check 4WD switch (refer to "4WD Switch" in Section 7D), "BLU/BLK" and "BLK" circuits of 4WD switch. If OK, substitute a known-good 4WD controller and recheck.
4	Check VSV1 circuit. 1) Turn ignition switch ON. 2) Check voltage between A1 terminal and ground. Is it 10 – 14 V when transfer lever is in 4H or 4L range and about 0 V for 10 seconds after it is shifted to 2H range?	Go to Step 5.	Check VSV1 (refer to "4WD Control System Check" in this section), "YEL/RED" and "GRY/BLK" circuits of VSV1. If OK, substitute a known-good 4WD controller and recheck.
5	Check VSV2 circuit. 1) Turn ignition switch ON. 2) Check voltage between A2 terminal and ground. Is it 10 – 14 V when transfer lever is in 2H range and about 0 V for 5 seconds after it is shifted to 4H or 4L range?	Go to Step 6.	Check VSV2 (refer to "4WD Control System Check" in this section), "YEL/RED" and "GRY/RED" circuits of VSV2. If OK, substitute a known-good 4WD controller and recheck.
6	Check vacuum switch circuit. 1) Turn ignition switch ON (stating engine). 2) Check voltage between A6 terminal and ground. Is it 10 – 14 V when transfer lever is in 2H range and about 0 V for 5 seconds after it is shifted to 4H or 4L range?	Go to Step 7.	Check vacuum switch (refer to "4WD Control System Check" in this section), "GRY" and "BLK" circuits of vacuum switch. If OK, substitute a known-good 4WD controller and recheck.
7	Check 4WD indicator light circuit. 1) Turn ignition switch ON. 2) Check voltage between A3 terminal and ground. Is it 10 – 14 V when transfer lever is in 2H range and about 0 V within 15 seconds after it is shifted to 4H or 4L range?	Substitute a known-good 4WD controller and recheck.	Check "BLU" circuit (including indicator light and combination meter refer to "Combination Meter" in Section 8). If OK, substitute a known-good 4WD controller and recheck.

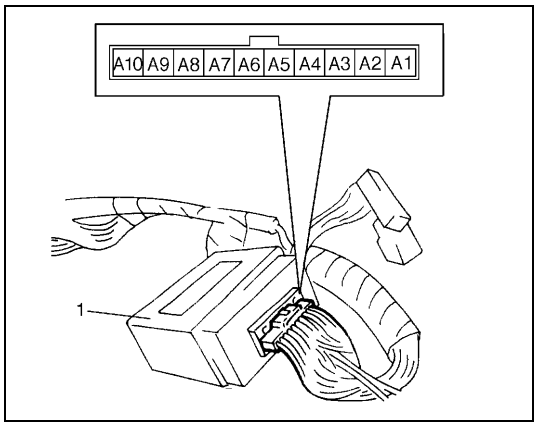

4WD Controller and its Circuit Check

Voltage Check

Check for input or output voltage of 4WD controller (1) (voltage between each circuit and body ground) with 4WD controller connector connected and ignition switch turned START (engine run).

CAUTION:

- **Disable air bag system (if equipped with Air Bag), refer to "Disabling Air Bag System" in Section 10B.**
- **This check must be carried out in a well-ventilated place.**

Terminal	Circuit	Normal Voltage	Condition
A1	VSV1	about 0 V	10 seconds after transfer shift control lever: 4WD → 2WD
		10 – 14 V	Transfer shift control lever: 4WD
A2	VSV2	*about 0 V	5 seconds after transfer shift control lever: 2WD → 4WD
		10 – 14 V	Transfer shift control lever: 2WD
A3	4WD indicator lamp	*about 0 V	Transfer shift control lever: 4WD
		10 – 14 V	Transfer shift control lever: 2WD
A4	–	–	–
A5	Ground	about 0 V	any time
A6	Vacuum switch	*about 0 V	5 seconds after transfer shift control lever: 2WD → 4WD
		10 – 14 V	Other than above
A7	4WD switch	about 0 V	Transfer shift control lever: 4WD
		10 – 14 V	Transfer shift control lever: 2WD
A8	–	–	–
A9	ECM	0 – 1 V	IG: ON
		Voltage varies according to engine speed.	
A10	Ignition switch	10 – 14 V	IG: ON

*: With engine running

4WD Control System Check

Air Locking Hub

1) Start engine and shift transfer shift control lever to 2H position.

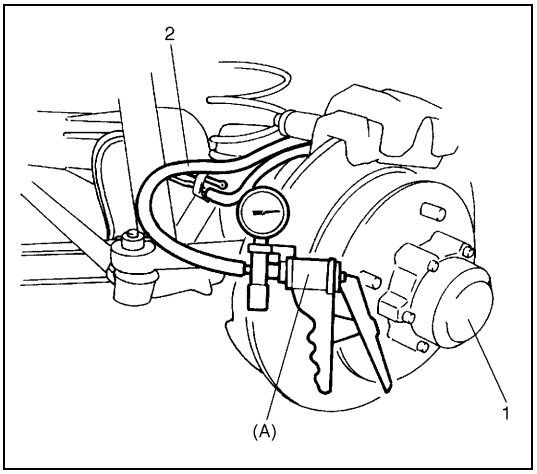

2) Connect vacuum pump gauge (special tool) to the spindle hose (2) which is disconnected from upper side pipe as shown. Apply vacuum and check operating sound from air locking hub (1).
   If there is not operating sound, replace air locking hub assembly.

Vacuum specification
Lower than –40 kPa (–5.70 Psi)

Special tool
(A): 09917-47011

3) Connect hose, then start engine and shift transfer shift control lever to 4H or 4L position.

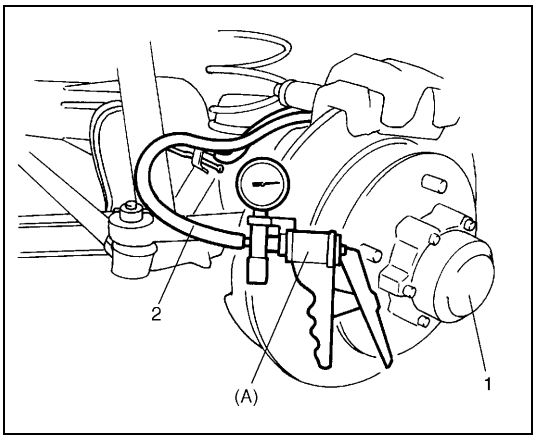

4) Connect vacuum pump gauge to the spindle hose (2) disconnected from lower side pipe.
   Apply vacuum and check operating sound from air locking hub (1).
   If there is no operating sound, replace air locking hub assembly.

Vacuum specification
Lower than –40 kPa (–5.70 Psi)

Special tool
(A): 09917-47011

VSV1 and VSV2

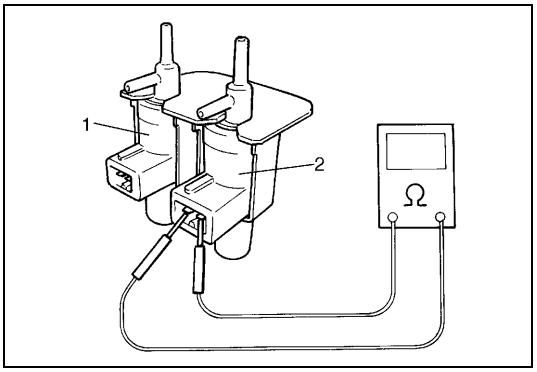

1) Disconnect coupler from VSV1 (1) (VSV2) (2) and check resistance between two terminals of VSV1 (1) (VSV2) (2).
   If resistance is out of specification, replace.

Resistance of VSV1 and VSV2
: 33 – 39 Ω

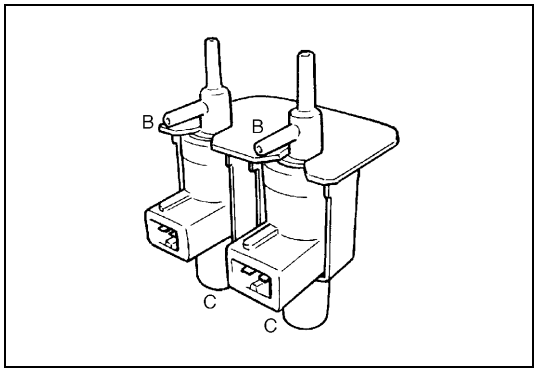

2) Blow air from B and check that air comes out of C.
   If found faulty, replace.

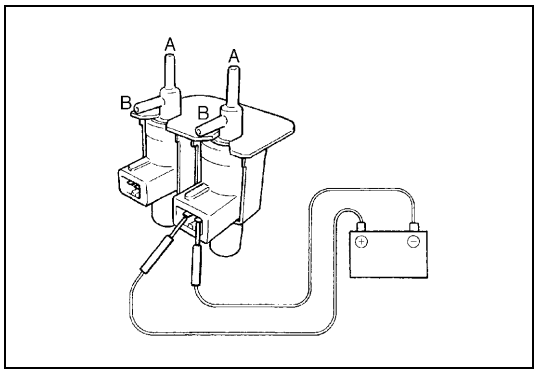

3) Connect 12 V-battery to VSV1 (VSV2) terminals and check continuity between A and B.
   Blow air from B and check that air comes out of A.
   If found faulty, replace.

Vacuum Switch

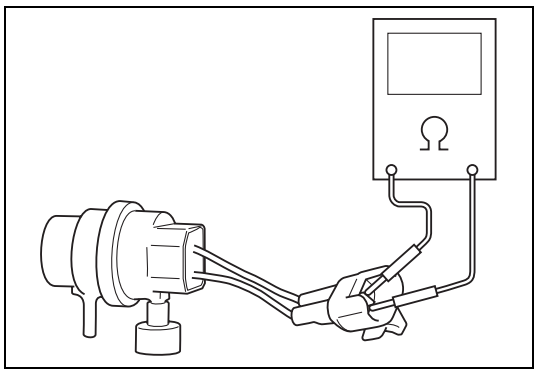

1) Disconnect coupler from vacuum switch and check resistance between two terminals of vacuum switch.
   If resistance is out of specification, replace.

Resistance of vacuum switch
: More than 1 MΩ

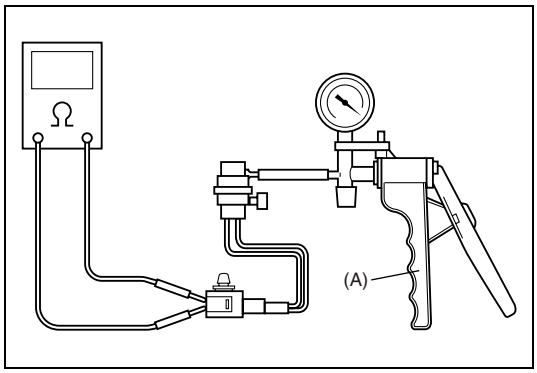

2) Connect vacuum pump gauge and apply vacuum lower than –40 kPa (–5.70 Psi), then check resistance between terminals of vacuum switch.
   If resistance is out of specification, replace.

Vacuum switch resistance
: Less than 0.8 Ω

Special tool
(A): 09917-47011

4WD Switch

Refer to “4WD Switch” in Section 7D.

Vacuum Hose / Pipe

Inspect vacuum hoses for leaks or cracks, vacuum pipes for cracks, dents or corrosion. If defective, replace.

Vacuum Pump

Refer to “Vacuum Pump” in Section 6H.

Vacuum Control Valve

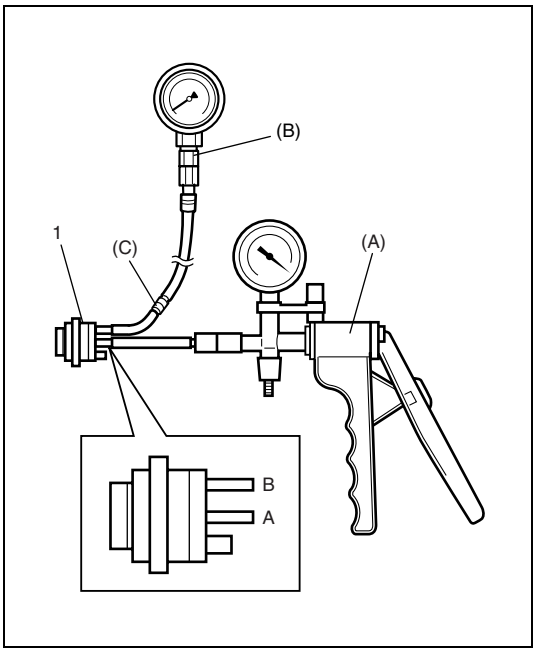

1) Remove vacuum control valve.
2) Connect vacuum pump gauge to A pipe of vacuum control valve and vacuum gauge to B pipe of vacuum control valve.
3) Apply vacuum lower than –60 kPa (–8.70 Psi), then check vacuum applied to B pipe of vacuum, control valve.
   If vacuum is out of specification, replace.

A: Pipe to vacuum pump
B: Pipe to vacuum switching valve

Vacuum specification applied to B pipe when applying –60 kPa to A pipe
–50 – –54 kPa (–7.25 – –7.83 Psi)

Special tool
(A): 09917-47011
(B): 09915-67311
(C): 09918-08210

On-Vehicle Service

Stabilizer Bar / Bushings

Removal

1) Hoist vehicle.
2) Remove front bumper.

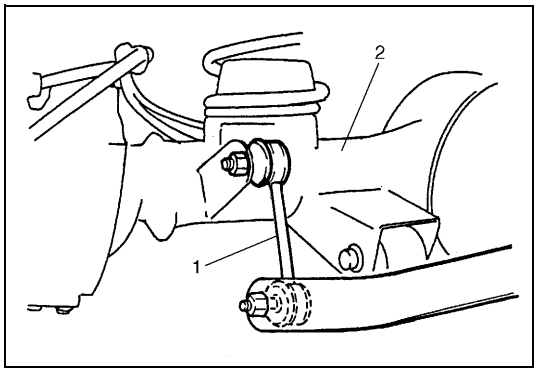

3) Disconnect stabilizer ball joints (right & left) (1) from front axle housing (2).

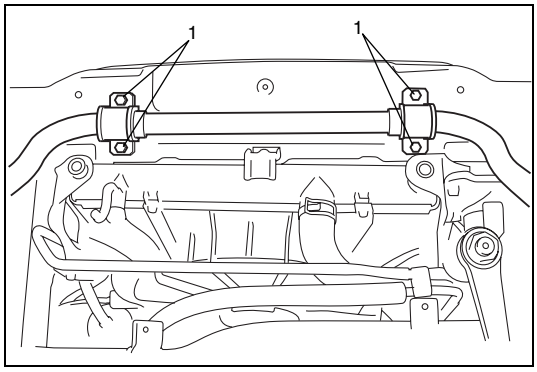

4) Remove stabilizer bar mount bush bracket bolts (1).
5) Remove stabilizer bar with its ball joint.
6) Disconnect stabilizer ball joints (right & left) from its bar.

Installation

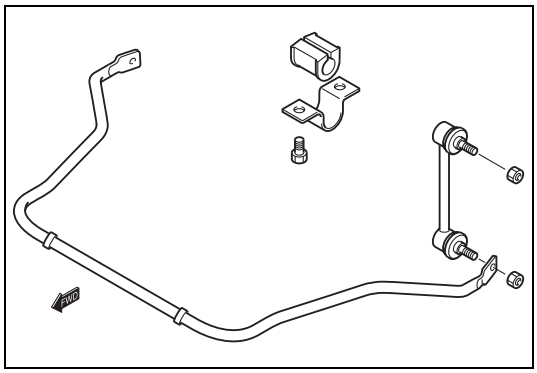

1) Connect stabilizer ball joints (right & left) to its bar.

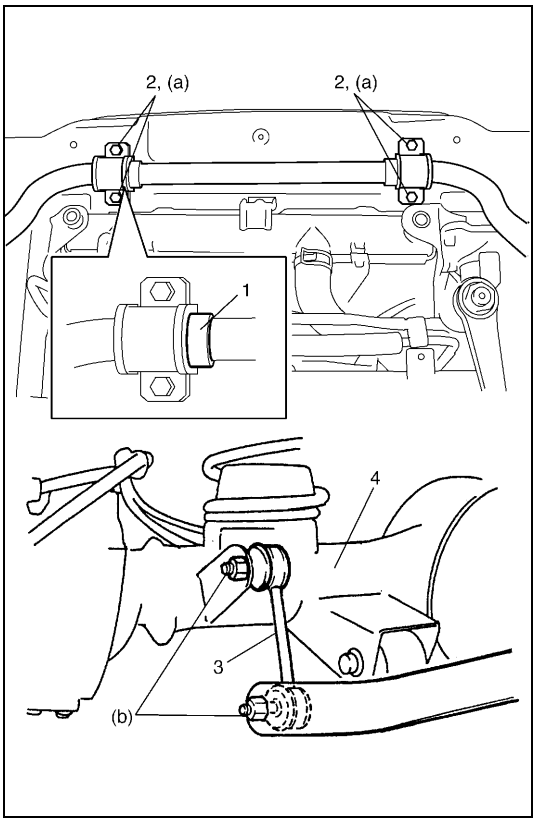

NOTE:

For correct installation of stabilizer bar, side-to-side, be sure that stopper ring (1) on stabilizer bar aligns with mount bush, both right and left, as shown.

2) When installing stabilizer, loosely assemble all components while insuring that stabilizer is centered, side-to-side.
3) Tighten stabilizer bracket bolts (2) and stabilizer ball joint nuts to specified torque.

NOTE:

Tighten stabilizer mount bracket bolts (2) with vehicle hoisted a little in non-load condition.

Tightening torque
Stabilizer mount bracket bolts
(a): 20 N·m (2.0 kg-m, 14.5 lb-ft)
Stabilizer ball joint nuts
(b): 50 N·m (5.0 kg-m, 36.5 lb-ft)

3.	Stabilizer ball joint
4.	Front axle housing

4) Install front bumper.
5) Lower hoist.

Leading Arm / Bushing

Removal

1) Hoist vehicle.
2) Support front axle housing by using floor jack.
3) Remove shock absorber lower mounting bolt, refer to “Front Shock Absorber” in this section.
4) Remove mounting bolts and leading arm (1).

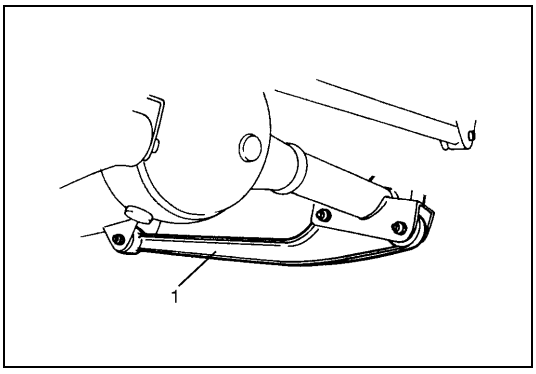

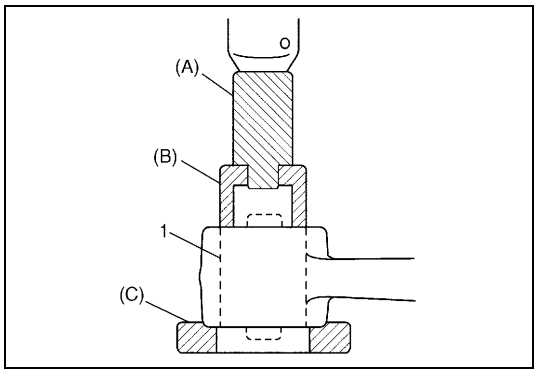

5) Remove bushings by using hydraulic press and special tools.

Special tool
(A): 09924-74510
(B): 09951-16030
(C): 09951-26010

Installation

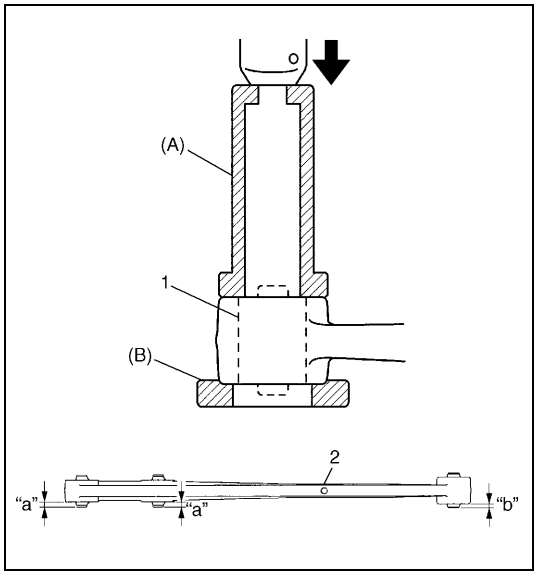

1) Install bushings (1) by using hydraulic press and special tools, noting the following point.
- Install bushings (1) so that either face of bushing are aligned with housing edge of leading arm (2), also the length between the aligned side end of bushing and leading arm (2) are within specification below.

Special tool
(A): 09913-85210
(B): 09951-26010

Specification for leading arm bushing protrusion
"a": 8.5 – 10.5 mm (0.33 – 0.41 in.)
"b": 6.0 – 9.0 mm (0.24 – 0.35 in.)

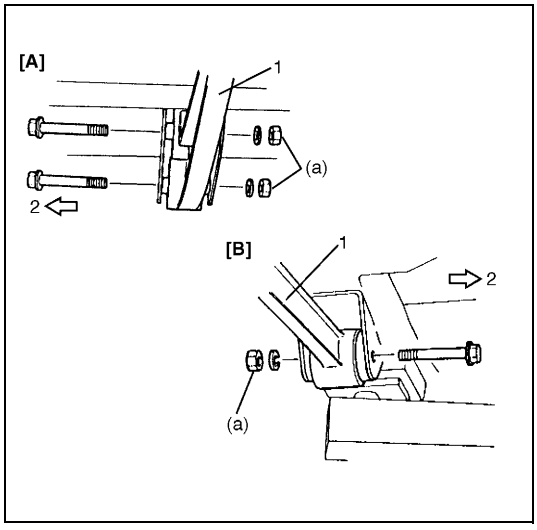

2) Install leading arm (1) to vehicle body and axle housing, referring to figure for proper installing direction of bolts.
   Nuts should not be tightened.
3) Install shock absorber lower mounting bolt, refer to "Front Shock Absorber" in this section.
4) Lower hoist and with vehicle in non-loaded condition, tighten nuts of leading arm to specified torque.

Tightening torque
Leading arm nuts
(a): 90 N·m (9.0 kg-m, 65.0 lb-ft)

2. Body outside
[A]: Front
[B]: Rear

Special Tool

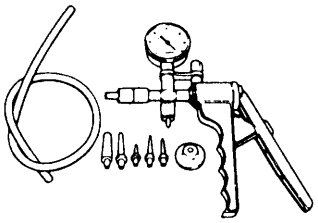 09917-47011 Vacuum pump gauge	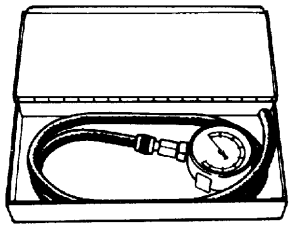 09915-67311 Vacuum gauge	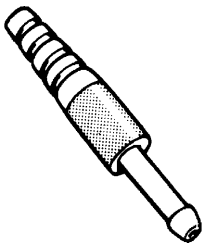 09918-08210 Vacuum gauge hose joint	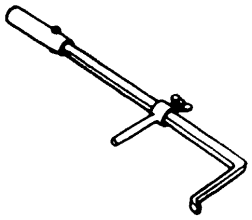 09913-50121 Oil seal remover
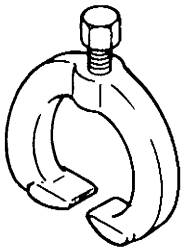 09913-65210 Tie rod end remover	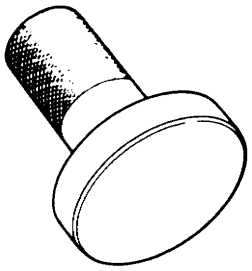 09913-75520 Bearing installer	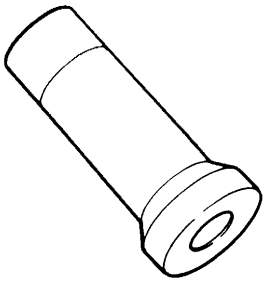 09951-76010 Bearing installer	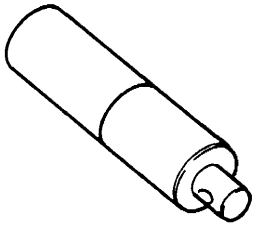 09924-74510 Bearing installer handle
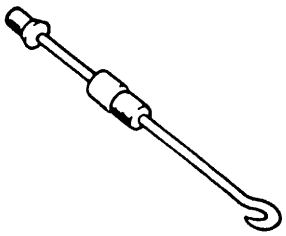 09942-15511 Sliding hammer	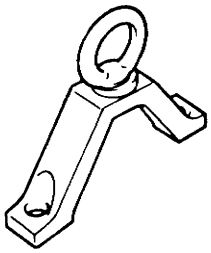 09943-35511 or 09943-35512 Brake drum remover	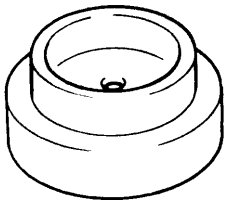 09944-66010 Wheel hub / knuckle oil seal installer	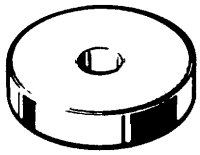 09944-68510 Bearing installer attachment
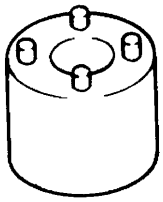 09951-16050 Wheel bearing tightening tool	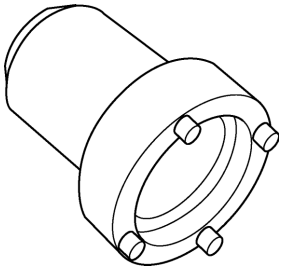 09944-77020 Ring nut wrench	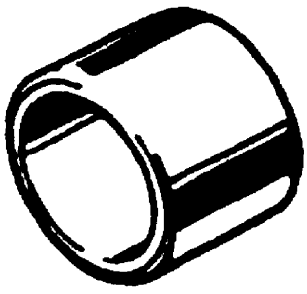 09944-78210 Bearing installer support	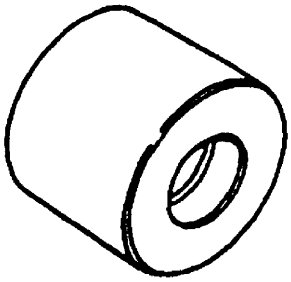 09917-88210 Valve guide installer attachment

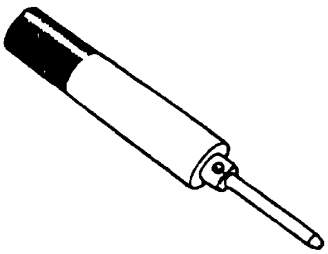 09916-58210 Valve guide installer handle	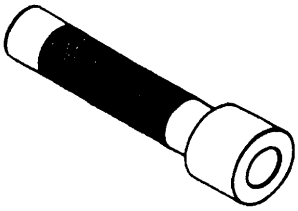 09922-55131 Bearing installer	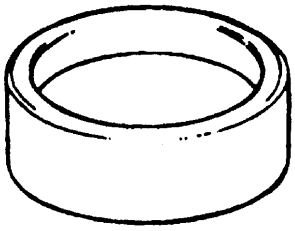 09944-66020 Bearing installer	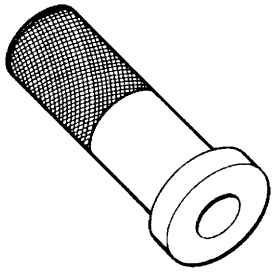 09913-85210 Oil seal installer
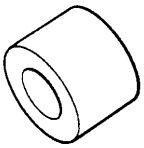 09951-16030 Bush remover	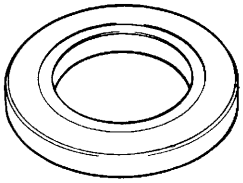 09951-26010 Bush remover plate		

SECTION 3E

REAR SUSPENSION

WARNING:

For lifting point of vehicle, refer to "Vehicle Lifting Points" in Section 0A.

NOTE:

- **All suspension fasteners are an important attaching part in that it could affect the performance of vital parts and systems, and/or could result in major repair expense. They must be replaced with one of the same part number or with an equivalent part if replacement becomes necessary. Do not use a replacement part of lesser quality or substitute design. Torque values must be used as specified during reassembly to assure proper retention of this part.**
- **Never attempt to heat, quench or straighten any suspension part. Replace it with a new part, or damage to the part may result.**
- **For the items with asterisk (*) in the "CONTENTS" below, refer to the same section of the Service Manual mentioned in "FOREWORD" of this manual.**

CONTENTS

General Description **3E-2**
Diagnosis ..... *
Diagnosis Table ..... *
Rear Shock Absorber Check ..... *
Trailing Arm, Lateral Rod, Axle Housing and Coil Spring Check ..... *
Trailing Arm and Lateral Rod Bush Check ..... *
Rear Suspension Fasteners ..... *
Bearing Retainer and Axle Shaft Oil Seal Check ..... *
Bump Stopper and Spring Rubber Seat Check ..... *
Wheel Disc, Nut and Bearing Check ..... *
On-Vehicle Service **3E-3**
Rear Shock Absorber ..... *
Coil Spring ..... *
Bump Stopper ..... *
Lateral Rod 3E-3
Trailing Arm / Bushing ..... *
Rear Axle Shaft and Wheel Bearing ..... *
Rear Axle Shaft Inner Oil Seal ..... *
Rear Axle Housing 3E-4
Tightening Torque Specifications ..... *
Required Service Materials ..... *
Special Tools ..... *

General Description

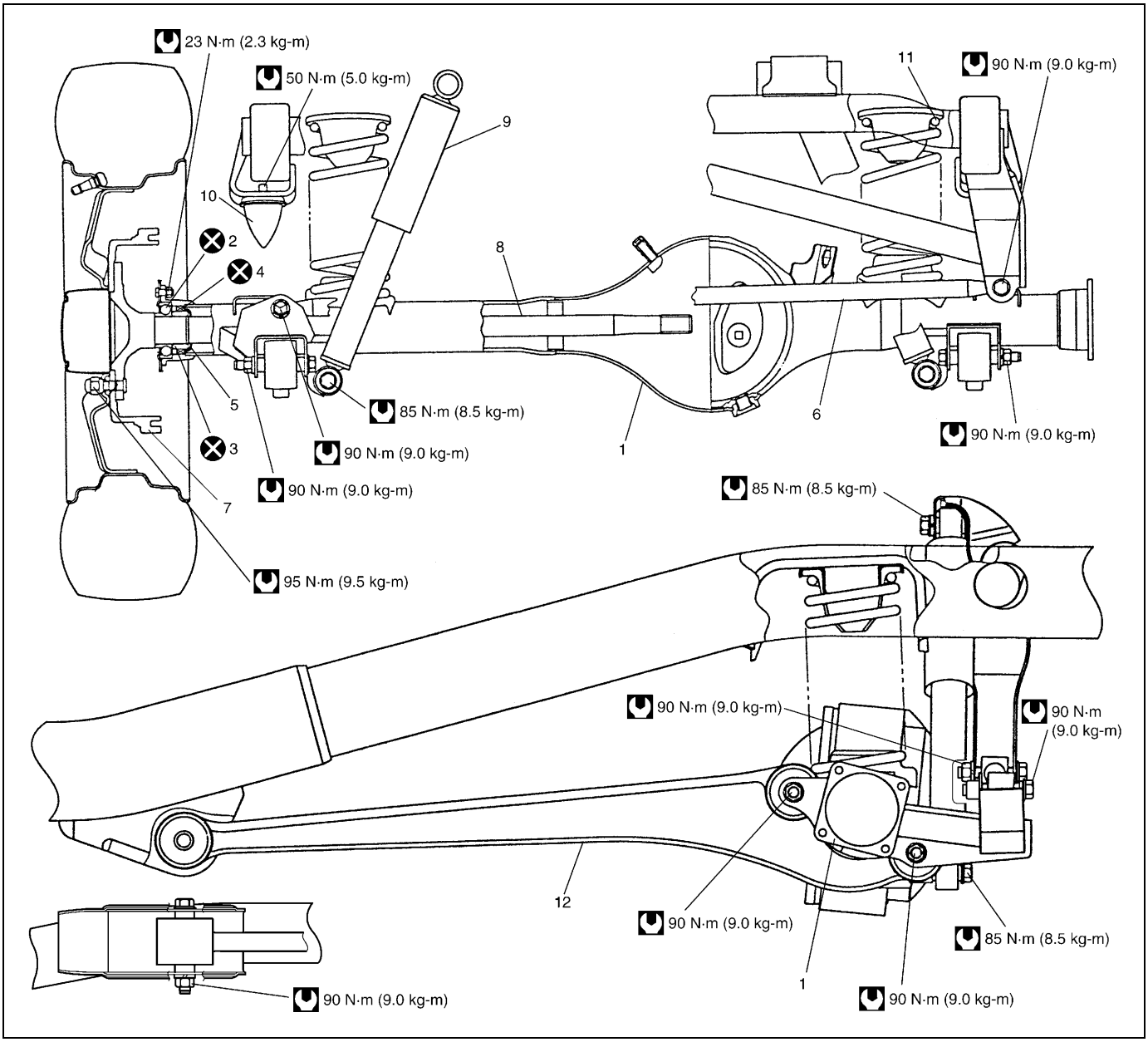

1. Rear axle housing	4. Bearing oil seal	7. Brake drum	10. Bump stopper	Tightening torque
2. Rear wheel bearing	5. Oil seal protector	8. Rear axle shaft	11. Coil spring	Do not reuse.
3. Bearing retainer ring	6. Lateral rod	9. Shock absorber	12. Trailing arm	

On-Vehicle Service

Lateral Rod

Removal

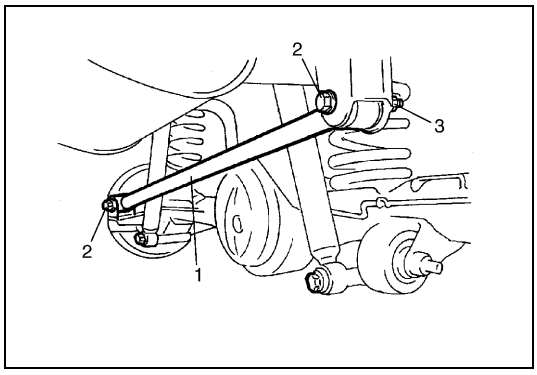

1) Hoist vehicle.
2) Remove lateral rod mounting bolts (2) and nut (3).
3) Remove lateral rod (1).

Installation

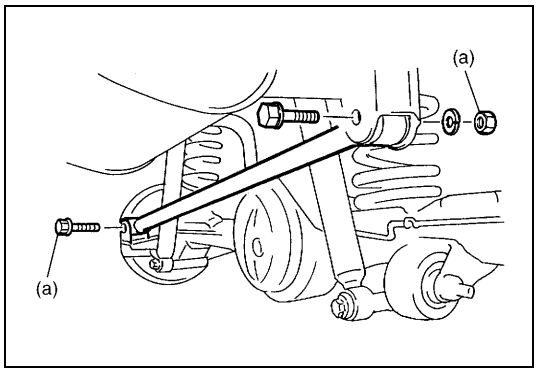

1) Install lateral rod to vehicle body and rear axle housing. Tighten bolt and nut temporarily by hand.
2) Lower hoist and with vehicle in non-loaded condition, tighten lateral rod bolt and nut to specified torque.

Tightening torque
Lateral rod bolt and nut
(a): 90 N·m (9.0 kg-m, 65.0 lb-ft)

Rear Axle Housing

Removal

1) Hoist vehicle and remove wheels.
2) Remove rear axle shafts (right & left), refer to “Rear Axle Shaft and Wheel Bearing” in this section.

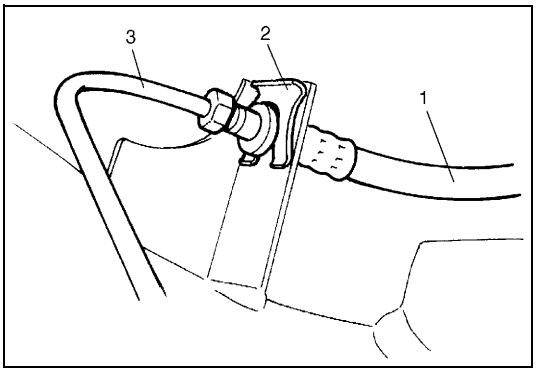

3) Disconnect brake pipe (3) from flexible hose (1) and remove E-ring (2).
4) Remove brake pipe clamps and pipes from axle housing.

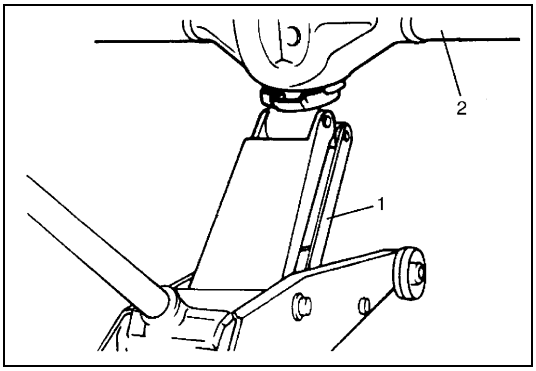

5) For jobs hereafter, support rear axle housing (2) by using floor jack (1) under axle housing (2).
6) Remove LSPV stay from axle housing (if equipped with LSPV).

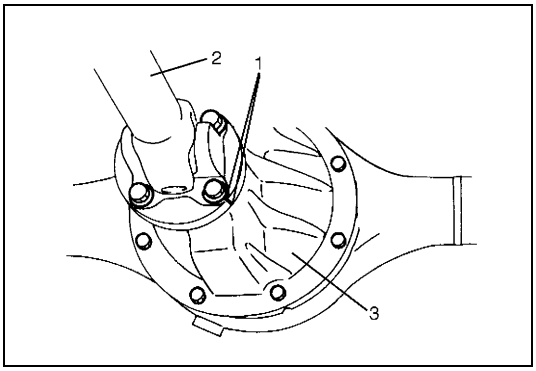

7) Before removing propeller shaft (2), give match marks (1) on joint flange and propeller shaft (2) as shown.
   Remove propeller shaft (2).
8) Remove differential carrier assembly (3).

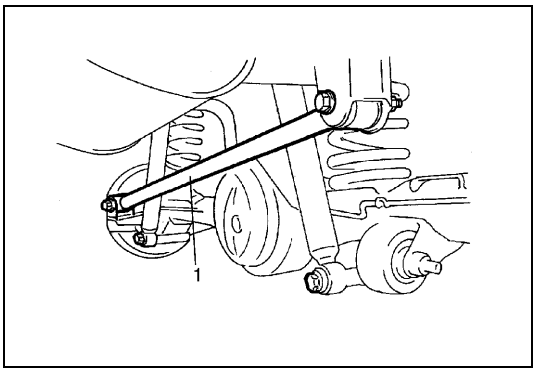

9) Remove lateral rod (1).

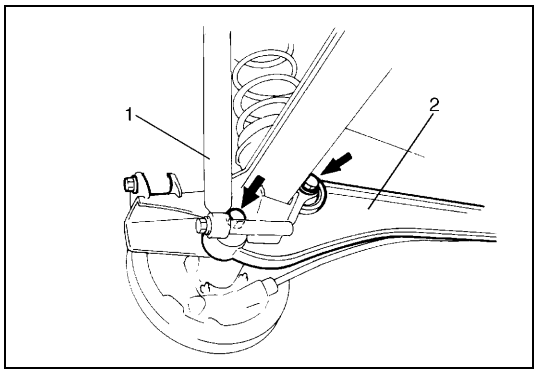

10) Loosen rear mounting nuts (right & left) of trailing arm (2) but don't remove bolt.
11) Remove shock absorbers (1) (right & left) lower mounting bolt.

12) Lower floor jack until tension of suspension coil spring becomes a little loose and remove rear mount bolts of trailing arm.
13) Lower rear axle housing gradually.

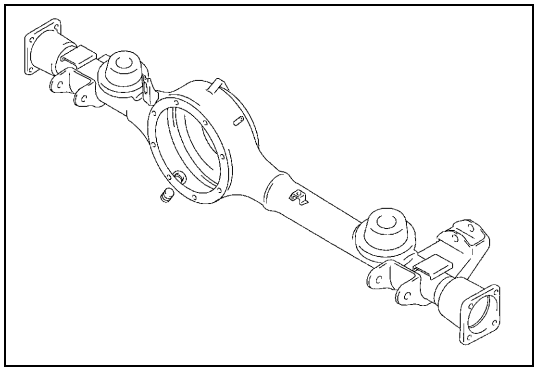

14) Remove axle housing.

Installation

Install removed parts in reverse order of removal, noting the following.

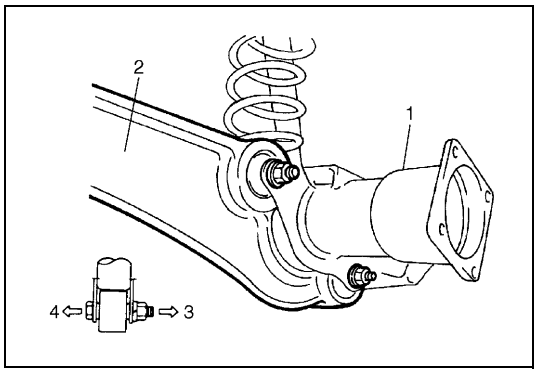

1) Place rear axle housing (1) on floor jack. Then install trailing arms (2) rear mounting bolts (right & left) in proper direction as shown. At this time, mount nuts but don't tighten them.

3. Out side
4. Body center

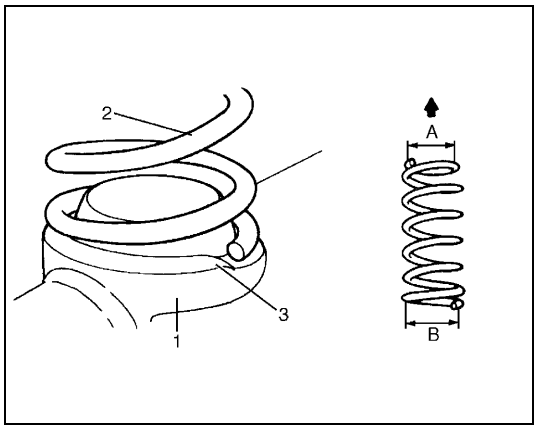

2) Install coil spring (2) (right & left) on spring seat (1) of axle housing and raise axle housing.

NOTE:

- **Upper and lower diameters of coil spring (2) are different. Bring larger diameter end at bottom and set its open end in place on spring seat (1).**
- **When seating coil spring (2), mate spring end with stepped part (3) of rear axle spring seat (1) as shown.**

A: Upper side (small dia.)
B: Lower side (large dia.)

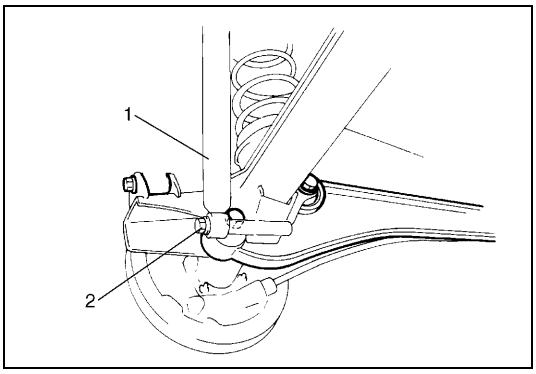

3) Install lower part of shock absorber (1) to right and left sides of axle housing and tighten bolts (2) temporarily by hand.

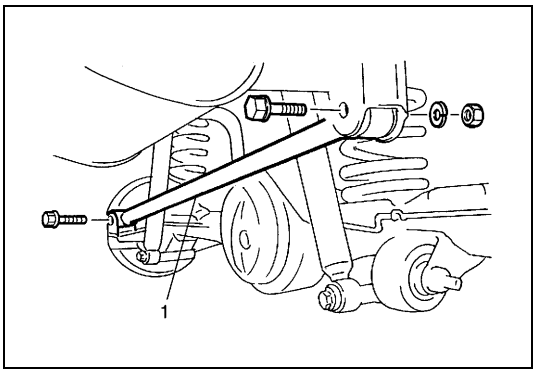

4) Install lateral rod (1) and install bolts in proper direction as shown.
   At this time, mount bolt and nut but don't tighten them.

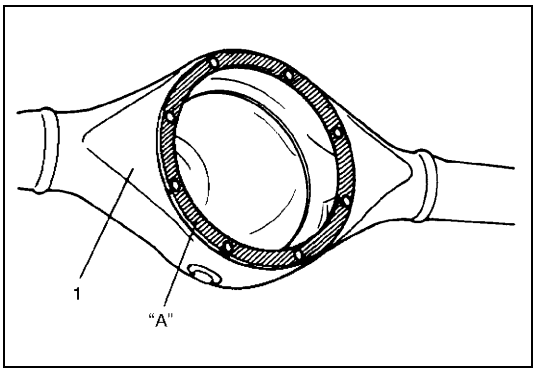

5) Clean mating surfaces of axle housing (1) and differential carrier and apply sealant to housing side.

   "A": Sealant 99000-31110

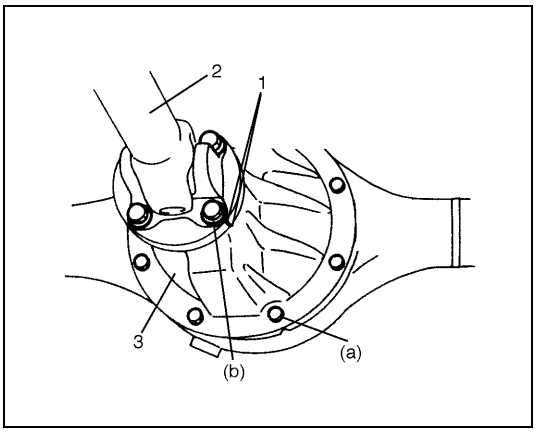

6) Install differential carrier assembly (3) to axle housing and tighten carrier bolts to specified torque.

   Tightening torque
   Rear differential carrier bolts
   (a): 23 N·m (2.3 kg-m, 17.0 lb-ft)

7) Install propeller shaft (2) to joint flange aligning match marks (1) and tighten flange bolts to specified torque.

   Tightening torque
   Rear propeller shaft bolts
   (b): 50 N·m (5.0 kg-m, 36.5 lb-ft)

8) Install LSPV stay to axle housing and adjust LSPV stay position, referring to "LSPV Assembly Inspection and Adjustment" in Section 5 (if equipped with LSPV).
9) Remove floor jack from axle housing.
10) Connect brake pipes and parking brake cable onto axle housing and clamp them securely.
    For clamping positions, refer to "Rear Brake Hose / Pipe" and "Parking Brake Cable" in Section 5.

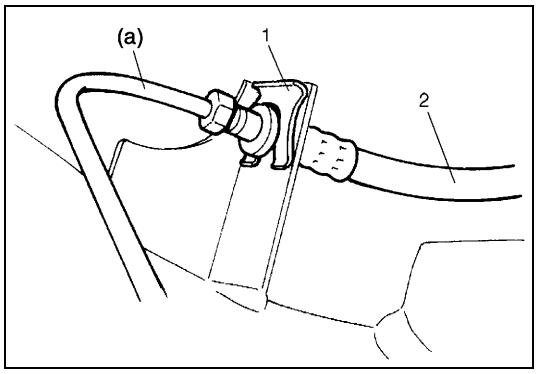

11) Connect brake flexible hose (2) to bracket on axle housing and secure it with E-ring (1).
12) Connect brake pipe to brake flexible hose and tighten brake pipe flare nut to specified torque.

Tightening torque
Brake pipe flare nut
(a): 16 N·m (1.6 kg-m, 11.5 lb-ft)

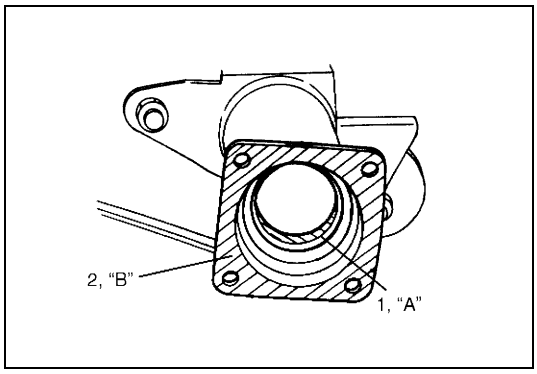

13) Clean mating surface of axle housing (2) (right & left) with brake back plate and apply sealant as shown.

"B": Sealant 99000-31090

14) Apply grease to axle shaft oil seals lip (1) (right & left) as shown.

"A": Grease 99000-25010

15) Install rear axle shafts, brake shoes, brake drums and wheels. For details, refer to "Rear Axle Shaft and Wheel Bearing" in this section.
16) Lower hoist.

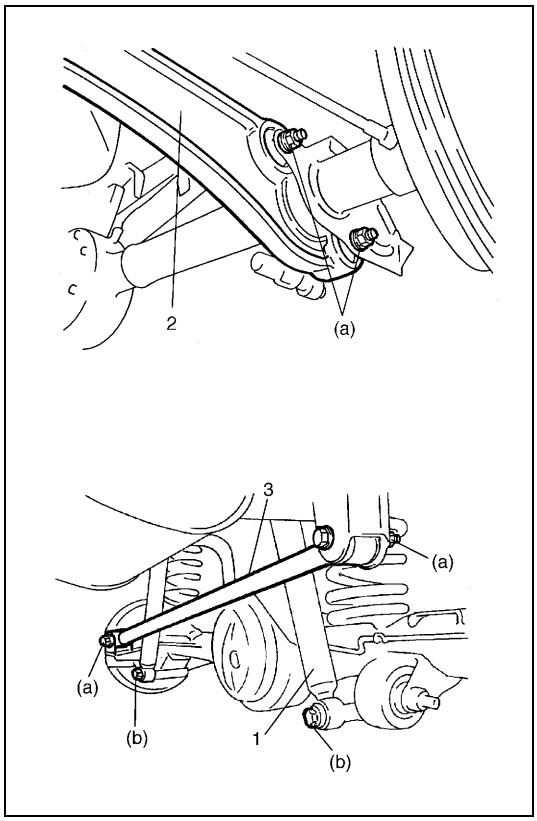

17) Tighten right and left trailing arm nuts and shock absorber lower bolts to specified torque.
Tighten lateral rod bolt and nut to specified torque.

NOTE:

When tightening these bolts and nuts, be sure that vehicle is off hoist and in non loaded condition.

Tightening torque
Trailing arm nuts and lateral rod bolt and nut
(a): 90 N·m (9.0 kg-m, 65.0 lb-ft)
Shock absorber lower bolts
(b): 85 N·m (8.5 kg-m, 61.5 lb-ft)

18) Check to ensure that brake drum is free from dragging and proper braking is obtained.
19) Perform brake test (foot brake and parking brake). (For brake test, see Section 5.)
20) Check each installed part for oil leakage.

1. Shock absorber
2. Trailing arm
3. Lateral rod

SECTION 5

BRAKES

WARNING:

For lifting point of vehicle, refer to "Vehicle Lifting Points" in Section 0A.

WARNING:

For vehicles equipped with a Supplement Restraint (Air Bag) System:

- **Service on and around the air bag system components or wiring must be performed only by an authorized SUZUKI dealer. Refer to "Air Bag System Components and Wiring Location View" under "General Description" in air bag system section in order to confirm whether you are performing service on or near the air bag system components or wiring. Please observe all WARNINGS and "Service Precautions" under "On-Vehicle Service" in air bag system section before performing service on or around the air bag system components or wiring. Failure to follow WARNINGS could result in unintentional activation of the system or could render the system inoperative. Either of these two conditions may result in severe injury.**
- **Technical service work must be started at least 90 seconds after the ignition switch is turned to the "LOCK" position and the negative cable is disconnected from the battery. Otherwise, the system may be activated by reserve energy in the Sensing and Diagnostic Module (SDM).**

NOTE:

- **When inspecting and servicing vehicle equipped with ABS, be sure to refer to section 5E first.**
- **All brake fasteners are important attaching parts in that they could affect the performance of vital parts and systems, and/or could result in major repair expense. They must be replaced with one of same part number or with an equivalent part if replacement becomes necessary. Do not use a replacement part of lesser quality or substitute design. Torque values must be used as specified during reassembly to assure proper retention of all parts. There is to be no welding as it may result in extensive damage and weakening of the metal.**
- **For the items with asterisk (*) in the "CONTENTS" below, refer to the same section of the Service Manual mentioned in "FOREWORD" of this Manual.**

CONTENTS

General Description 5-3
Diagnosis 5-4
Road Testing Brakes ..... *
Brake Fluid Leaks ..... *
Substandard or Contaminated Brake Fluid ..... *
Diagnosis Table ..... *
Brake Pedal Free Height Adjustment ..... *
Brake Pedal Play Check ..... *
Stop Light Switch Adjustment 5-4
Excessive Pedal Travel Check ..... *
Front Brake Disc Check ..... *
Front Brake Pad Check ..... *
Rear Brake Shoe Check ..... *
Master Cylinder and Brake Fluid Level Check ..... *
Rear Drum Brake Shoe Adjustment ..... *
Parking Brake Inspection and Adjustment ..... *
Booster Operation Check ..... *
Fluid Pressure Test (If Equipped with LSPV) ..... *
On-Vehicle Service 5-4
Air Bleeding of Brake System 5-4
Brake Hose and Pipe Inspection ..... *
Front Disc Brake 5-7
Brake pad 5-8
Caliper assembly 5-10
Brake disc 5-14
Rear Brake ..... *
Brake drum ..... *
Brake shoe ..... *

Wheel cylinder ..... *
Brake back plate ..... *
Master Cylinder 5-17
Master cylinder reservoir 5-17
Master cylinder assembly 5-19
Master cylinder ..... *
Fill reservoir ..... *
LSPV (Load Sensing Proportioning Valve) Assembly (If Equipped) ..... *
LSPV assembly ..... *
P (Proportioning) Valve ..... *
Brake Booster ..... *
Inspection and adjustment ..... *
Brake Hose / Pipe 5-21
Front brake hose / pipe 5-21
Rear brake hose / pipe 5-22
Parking Brake Lever/Cable ..... *
Parking brake lever ..... *
Parking brake cable ..... *
Tightening Torque Specifications 5-24
Required Service Material 5-24
Special Tool 5-25

General Description

When the foot brake pedal is depressed, hydraulic pressure is developed in the master cylinder to actuate pistons (two in front and four in rear).
The master cylinder is a tandem master cylinder. Three (or two) brake pipes are connected to the master cylinder and they make two independent circuits. One connects front brakes (right and left) and the other connects rear brakes (right and left).
The load sensing proportioning valve (LSPV) or the proportioning and bypass (P & B) valve is included in these circuits between the master cylinder and the rear brake.
In this brake system, the disc brake type is used for the front wheel brake and a drum brake type (leading / trailing shoes) for the rear wheel brake.
The parking brake system is mechanical. It applies brake force to only rear wheels by means of the cable and mechanical linkage system. The same brake shoes are used for both parking and foot brakes.

NOTE:

The figures shows left-hand steering vehicle.

WARNING:

If any hydraulic component is removed or brake line disconnected, bleed the brake system. The torque values specified are for dry, unlubricated fasteners.

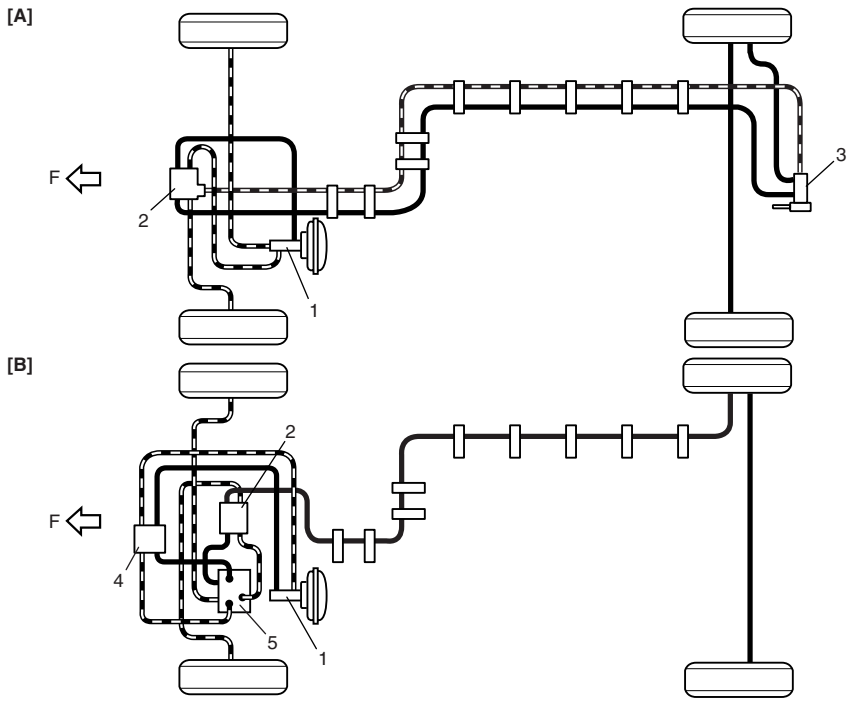

[A] : Vehicle with LSPV	1. Master cylinder	3. LSPV (Load Sensing Proportioning valve)	5. Hydraulic Unit
[B] : Vehicle with ABS	2. 5-way joint (4-way joint)	4. P & B valve	F: Forward

Diagnosis

Stop Light Switch Adjustment

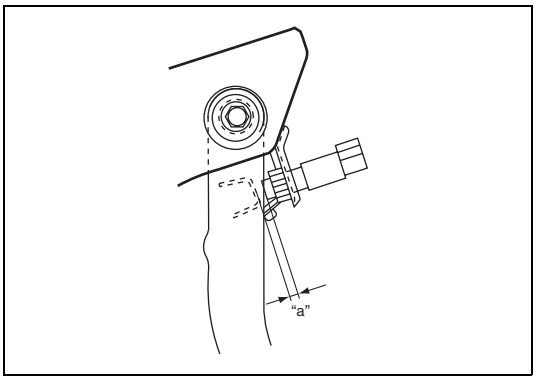

Adjustment should be made as follows when installing switch. Pull up brake pedal toward you and while holding it there, adjust switch position so that clearance between end of thread and brake pedal is as specified. Then adjust stop light switch assembly position and lock it by turning clockwise.

Clearance between brake pedal and stop light switch "a": 0.5 – 1.5 mm (0.02 – 0.06 in.)

On-Vehicle Service

Air Bleeding of Brake System

CAUTION:
Brake fluid is extremely damaging to paint. If fluid should accidentally touch painted surface, immediately wipe fluid from paint and clean painted surface.

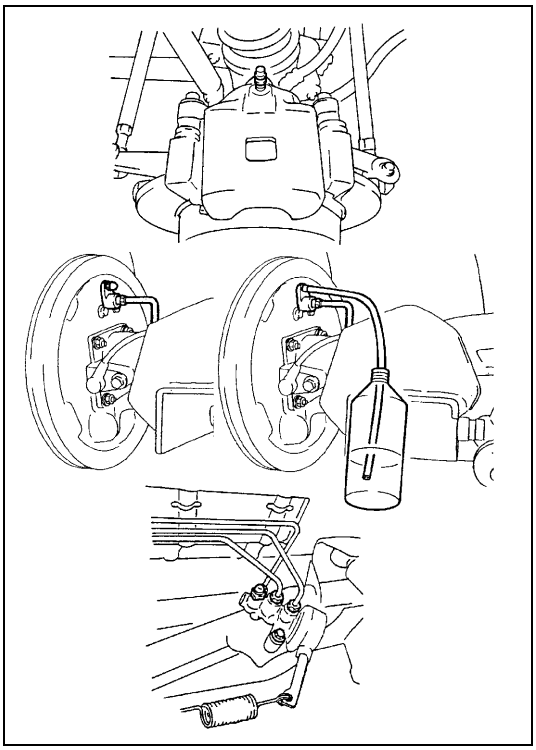

Bleeding operation is necessary to remove air whenever it entered hydraulic brake system.
Hydraulic lines of brake system consists of two separate lines, one for front wheel brakes and the other for rear wheel brakes. Air bleeding is necessary at right and left front wheel brakes, left rear wheel brake and LSPV (if equipped), i.e. 3 (4 for vehicle with LSPV) places in all.
Be sure to bleed air of brake system according to following procedure when its oil hydraulic circuit has been disconnected.

1) Fill master cylinder reservoir with brake fluid and keep at least one-half full of fluid during bleeding operation.

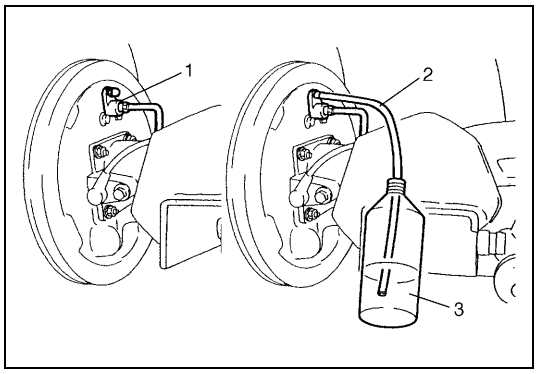

2) Remove bleeder plug cap (1).
   Attach a vinyl tube (2) to bleeder plug, and insert the other end into container (3).

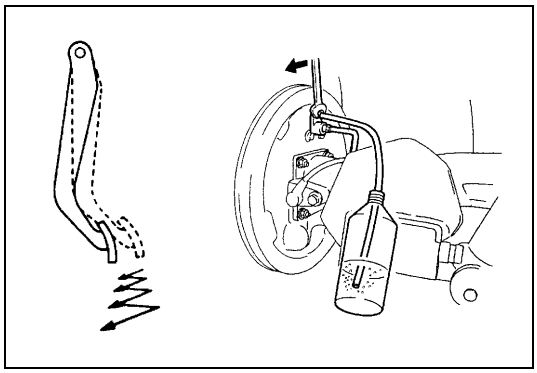

3) Depress brake pedal several times, and then while holding it depressed, loosen bleeder plug about one-third to one-half turn.

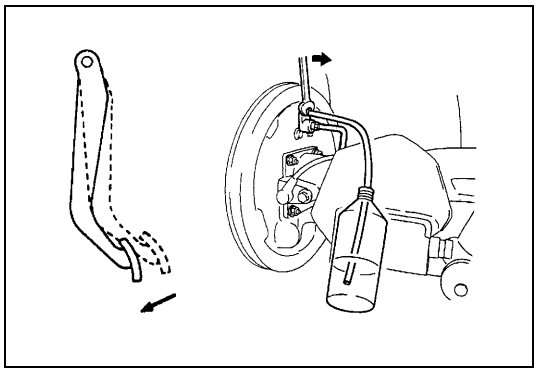

4) When fluid pressure in the cylinder is almost depleted, retighten bleeder plug.
5) Repeat this operation until there are no more air bubbles in hydraulic line.

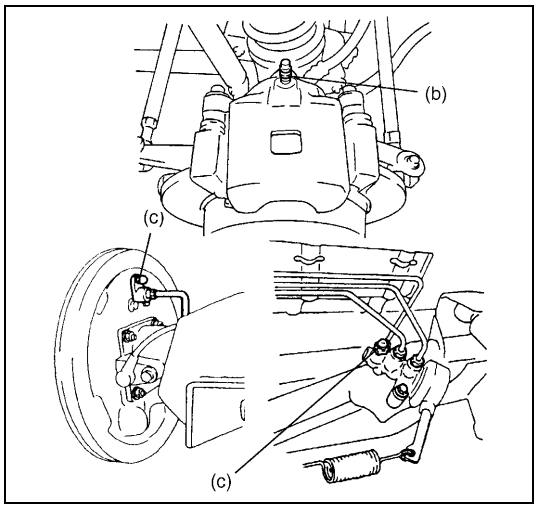

6) When bubbles stop, depress and hold brake pedal and tighten bleeder plug.

Tightening torque
Front caliper bleeder plug
(b): 8.5 N·m (0.85 kg-m, 6.5 lb-ft)

Rear wheel cylinder and LSPV bleeder plug
(c): 8 N·m (0.8 kg-m, 6.0 lb-ft)

7) Then attach bleeder plug cap.
8) After completing bleeding operation, apply fluid pressure to pipe line and check for leakage.

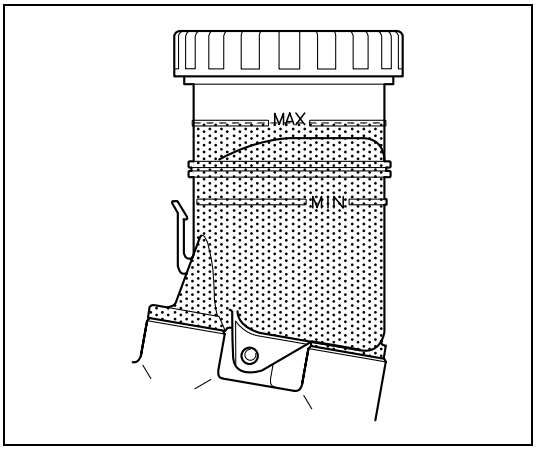

9) Replenish fluid into reservoir up to specified level.
10) Check brake pedal for “sponginess”. If found spongy, repeat entire procedure of bleeding.

Front Disc Brake

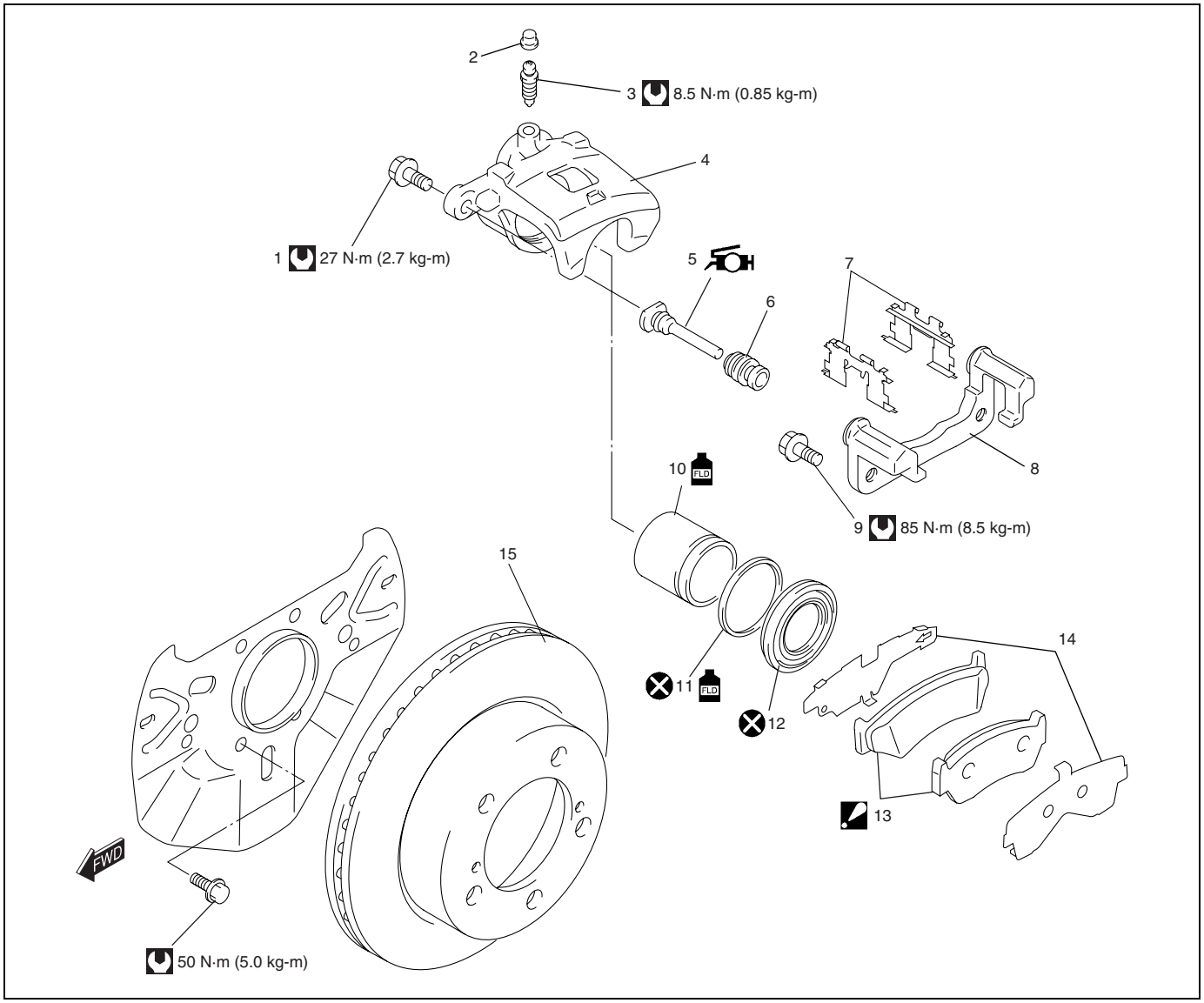

	1. Caliper pin bolt	FLD	10. Disk brake piston : Apply brake fluid to contact surface of cylinder
	2. Bleeder plug cap	FLD	11. Piston seal : Apply brake fluid to all around part of piston seal
	3. Bleeder plug		12. Cylinder boot
	4. Disk brake caliper		13. Disk brake pad : For right side brake, install pad with wear indicator to vehicle center side
	5. Slide pin : Apply rubber grease (included in spare parts) to pin outer surface		14. Anti noise shim
	6. Boot		15. Brake disk
	7. Pad spring		Tightening torque
	8. Brake caliper carrier		Do not reuse.
	9. Carrier bolt		

Brake pad

Removal

1) Hoist vehicle and remove wheel.

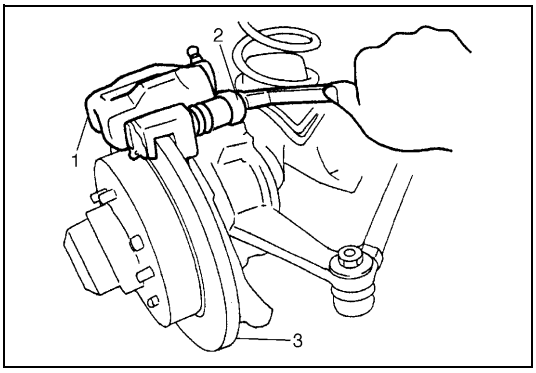

2) Remove caliper pin bolts (2).

1.	Caliper
3.	Disc

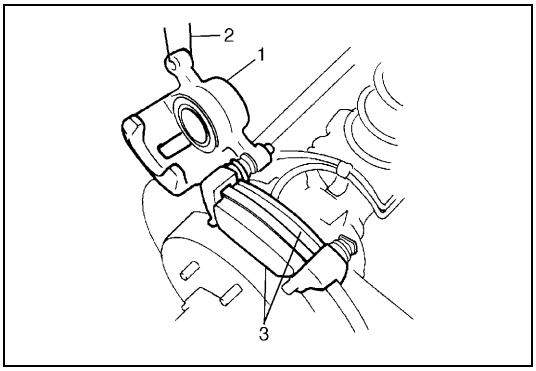

3) Remove caliper (1) from caliper carrier.

NOTE:

Hang removed caliper (1) with a wire hook (2) or the like so as to prevent brake hose from bending and twisting excessively or being pulled.
Don't operate brake pedal with pads (3) removed.

4) Remove pads (3).

Inspection

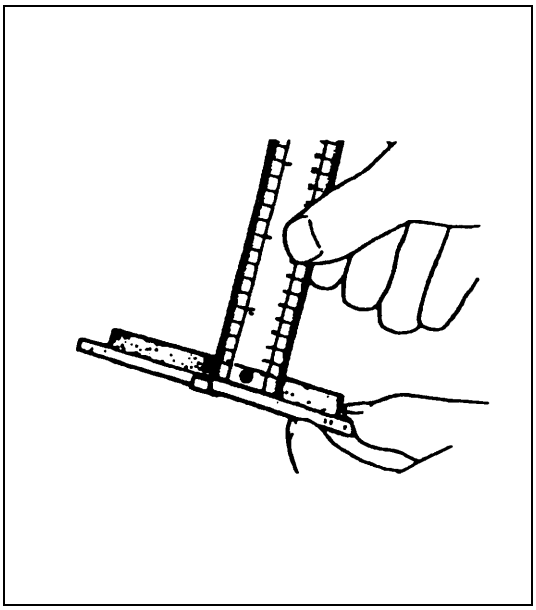

Check pad lining for wear. When wear exceeds limit, replace with new one.

CAUTION:

Never polish pad lining with sandpaper. If lining is polished with sandpaper, hard particles of sandpaper will be deposited in lining and may damage disc. When pad lining requires correction, replace it with a new one.

Brake pad thickness (lining)
Standard: 10 mm (0.39 in.)
Limit: 2 mm (0.08 in.)

NOTE:

When pads are removed, visually inspect caliper for brake fluid leak. Correct leaky point, if any.

Installation

NOTE:
See NOTE at the beginning of this section.

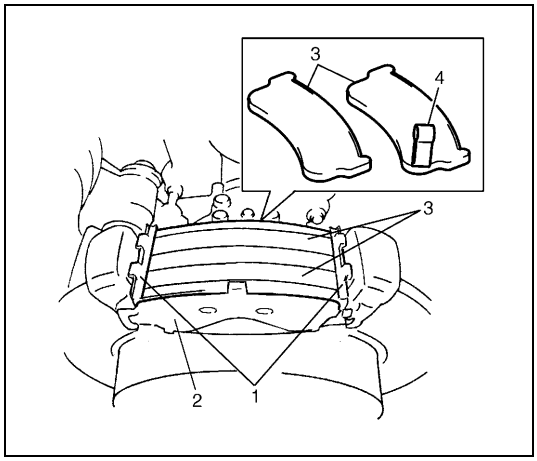

1) Set brake pad springs (1) and shim (2) and install brake pads (3).

NOTE:
For right side brake, install pad with wear indicator (4) to vehicle center side.

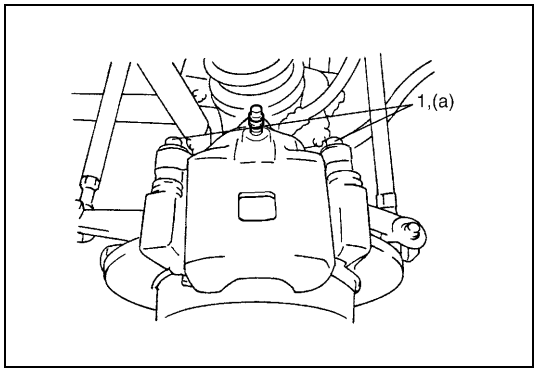

2) Install caliper and torque caliper pin bolts (1) to specification.

NOTE:
Make sure that boots are fit into groove securely.

Tightening torque
Brake caliper pin bolts
(a): 27 N·m (2.7 kg-m, 19.5 lb-ft)

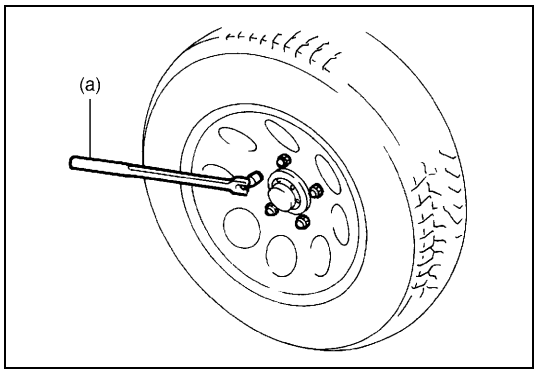

3) Install wheel and torque front wheel nuts to specification.

Tightening torque
Wheel nuts
(a): 95 N·m (9.5 kg-m, 69.0 lb-ft)

4) Upon completion of installation, perform brake test.

Caliper assembly

Removal

1) Hoist vehicle and remove wheel.
2) Remove brake flexible hose mounting bolt from caliper. As this will allow fluid to flow out of hose, have a container ready beforehand.

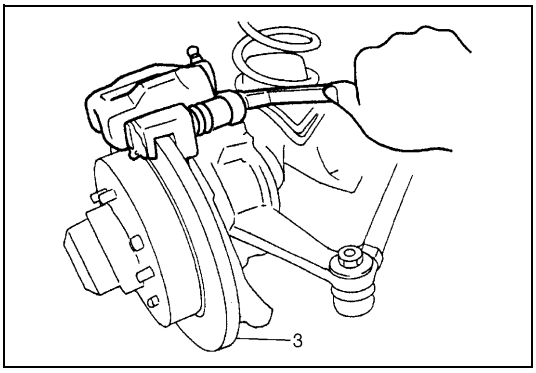

3) Remove caliper pin bolts.
4) Remove caliper from carrier.

Disassembly

1) Before disassembly, clean all around caliper with brake fluid.

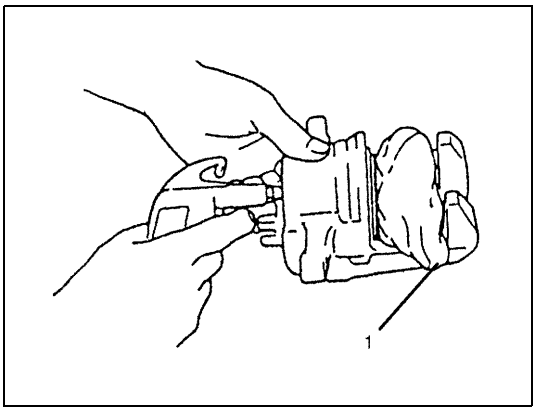

2) Blow compressed air into cylinder through bolt hole where flexible hose was fitted. With this air pressure, piston can be pushed out of cylinder.

WARNING:
Do not apply too highly compressed air which will cause piston to jump out of cylinder. Place a cloth (1) to prevent piston from damage. It should be taken out gradually with moderately compressed air. Do not place your fingers in front of piston when using compressed air.

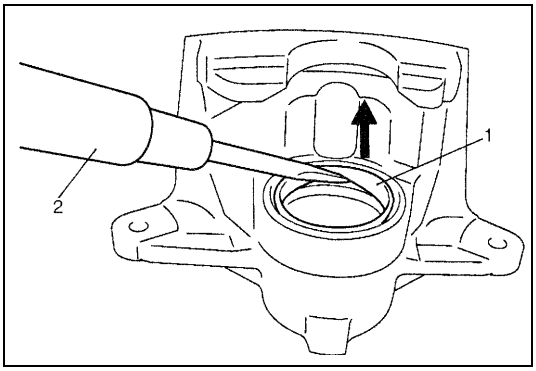

3) Remove piston boot (1) prying it with a metal tool (2) (no sharp edge).

CAUTION:
Be careful not to damage inside (bore side) of cylinder.

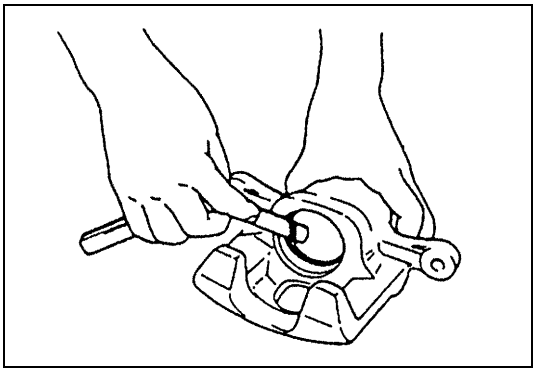

4) Remove piston seal using a thin blade like a thickness gauge, etc.

CAUTION:
Be careful not to damage inside (bore side) of cylinder.

5) Remove bleeder plug and cap from caliper.

Inspection

Cylinder slide pin / Pin cylinder

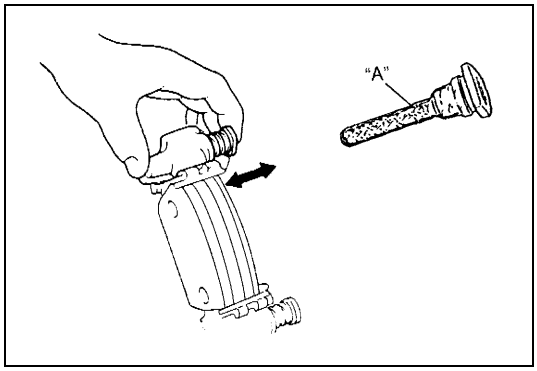

Check slide pin for smooth movement as shown in the figure.
If it is found faulty, correct or replace. Apply rubber grease to slide pin outer surface.

"A": Rubber grease

Bush dust boot and cylinder boot

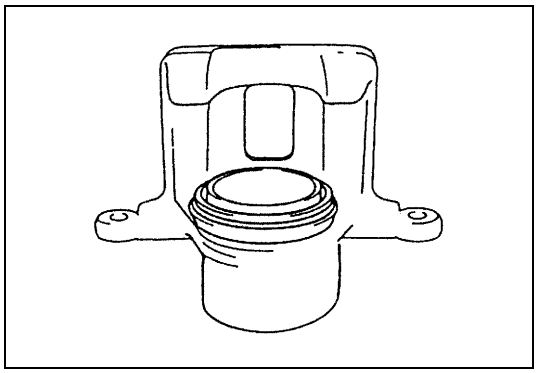

Check boots for breakage, crack and damage. If defective, replace.

Piston seal

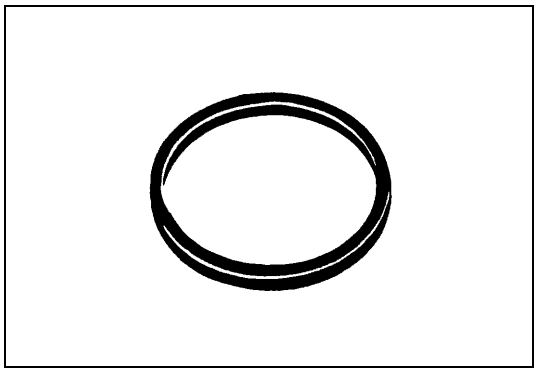

Excessive or uneven wear of pad lining may indicate unsmooth return of the piston. In such a case, replace rubber seal.

Assembly

Assemble parts in reverse order of disassembly, observing the following instructions.

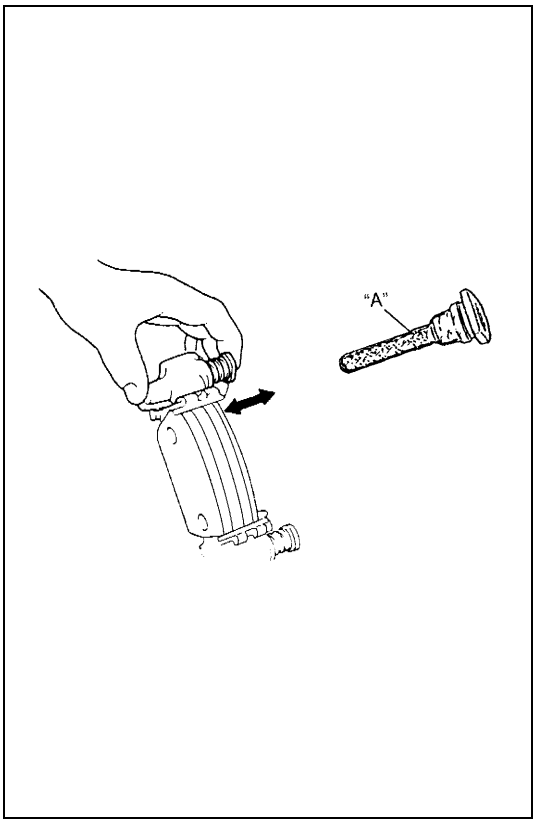

CAUTION:

- **Wash each part cleanly before installation in the same fluid as the one used in master cylinder reservoir.**
- **Never use other fluid or thinner.**
- **Before installing piston and piston seal to cylinder, apply brake fluid to them.**
- **After reassembling brake lines, bleed air from them.**
- **Install a new piston seal into groove in cylinder securely making sure that it is not twisted.**
- **Before installing caliper to carrier, install slide pin with grease applied into caliper carrier hole and check for its smooth movement in thrust direction.**

"A": Rubber grease

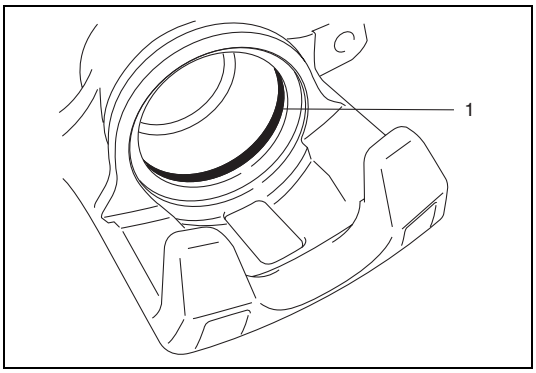

1) Install piston seal to caliper referring to the following instructions.
   - Piston seal is used to seal piston and cylinder and to adjust clearance between pad and disc.
   - Replace with a new one at every overhaul.
   - Fit piston seal (1) into groove in cylinder taking care not to twist it.

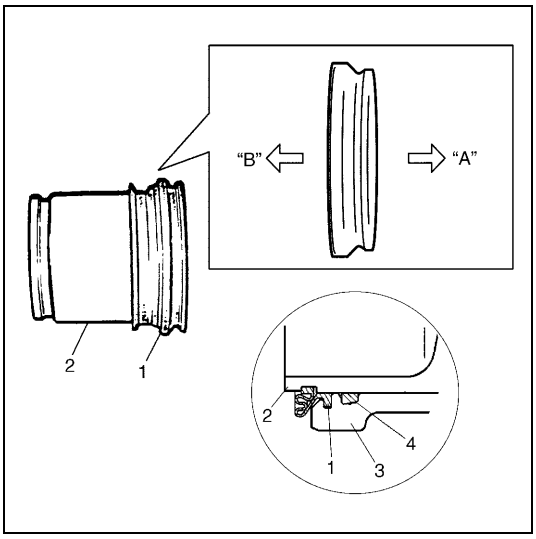

2) Before inserting piston (2) into cylinder, install new boot (1) onto piston (2) as shown.

"A": 1-grooved side directed inside (cylinder side)
"B": 2-grooved side directed pad side

3.	Cylinder
4.	Piston seal

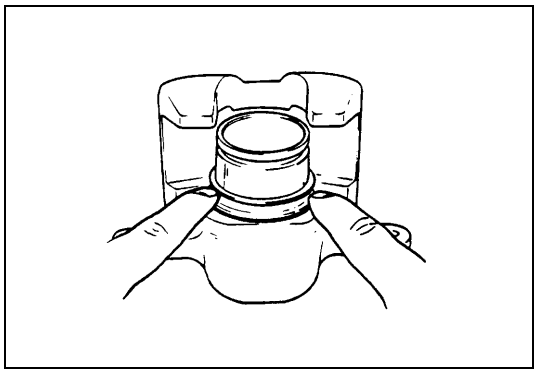

3) Fit boot as it is in figure into boot groove in cylinder with fingers.

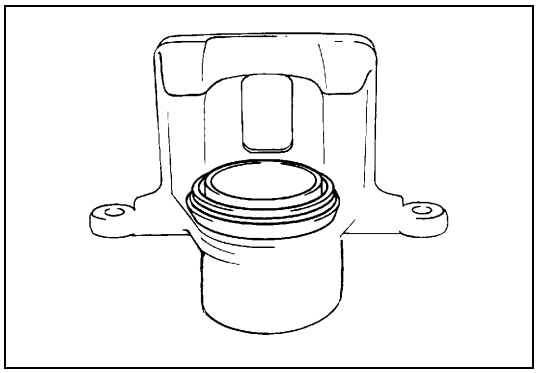

4) Insert piston into cylinder by hand and fit boot in boot groove in piston.

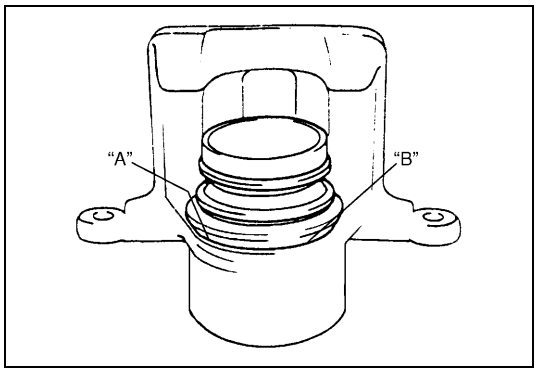

5) To confirm that boot is fitted in its groove in cylinder properly, pull piston out of cylinder a little but do not take it all out.

NOTE:

Boot's face "B" should be at the same level from cylinder's face "A" all around.

6) Insert piston into cylinder by hand.

Installation

1) Apply grease to slide pin, then install caliper to caliper carrier.

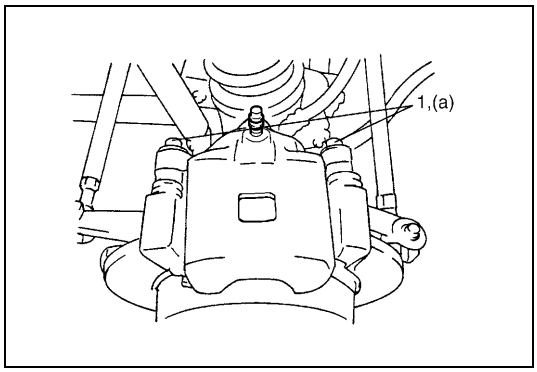

2) Torque caliper pin bolts (1) to specification.

NOTE:

Make sure that slide pin boots are fit into groove securely.

Tightening torque
Brake caliper pin bolts
(a): 27 N·m (2.7 kg-m, 19.5 lb-ft)

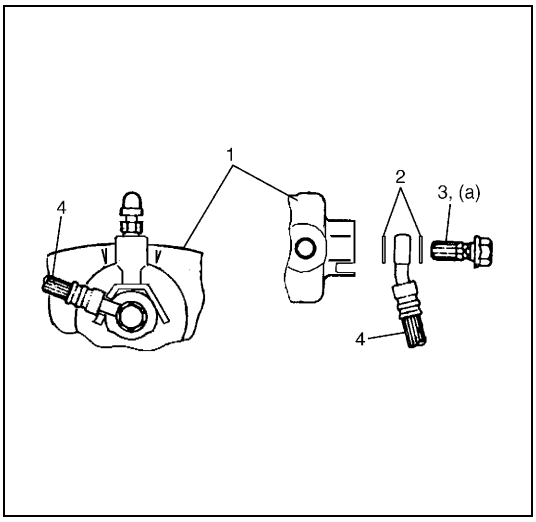

3) Install brake flexible hose (4) as shown and torque hose mounting bolt (3) to specification.

Tightening torque
Front brake flexible hose bolt
(a): 23 N·m (2.3 kg-m, 17.0 lb-ft)

WARNING:
Make sure that flexible hose is not twisted when tightening joint bolt. If it is twisted, reconnect it using care not to twist it.

1.	Brake caliper
2.	Washer

4) Install wheel and torque wheel nuts to specification.

Tightening torque
Wheel nuts: 95 N·m (9.5 kg-m, 69.0 lb-ft)

5) After completing installation, fill reservoir with brake fluid and bleed brake system referring to “Air Bleeding of Bleeding Brake System” in this section. Perform brake test and check each installed part for oil leakage.

Brake disc

Removal

1) Hoist vehicle and remove wheel.

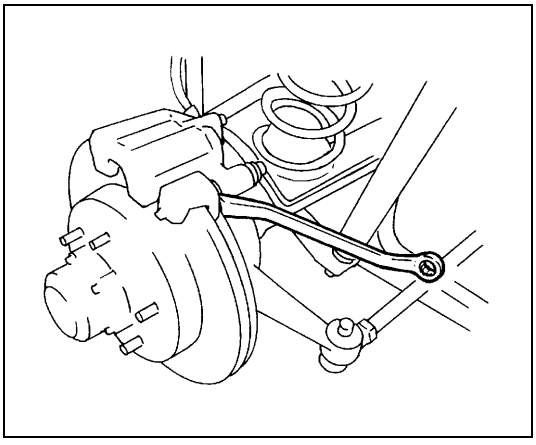

2) Remove caliper assembly by loosening carrier bolts (2 pcs).

CAUTION:
During removal, be careful not to damage brake flexible hose and not to depress brake pedal.

NOTE:
Hang removed caliper with a wire hook or the like so as to prevent brake hose from bending and twisting excessively or being pulled.
Don’t operate brake pedal with brake pads removed.

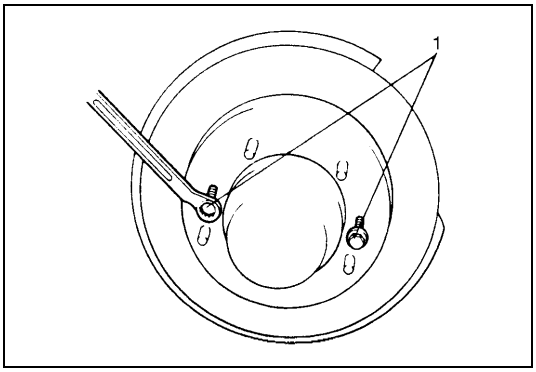

3) Pull brake disc off by using 8 mm bolts (1) (2 pcs).

Inspection

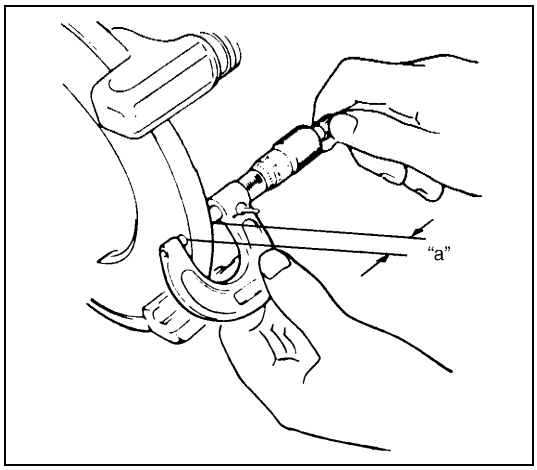

Check disc surface for scratches in wearing parts. Scratches on disc surface noticed at the time of specified inspection or replacement are normal and disc is not defective unless they are serious. But when there are deep scratches or scratches all over disc surface, replace it. When only one side is scratched, polish and correct that side.

Brake disc thickness "a"
Standard: 17.0 mm (0.67 in.)
Limit: 15.0 mm (0.59 in.)

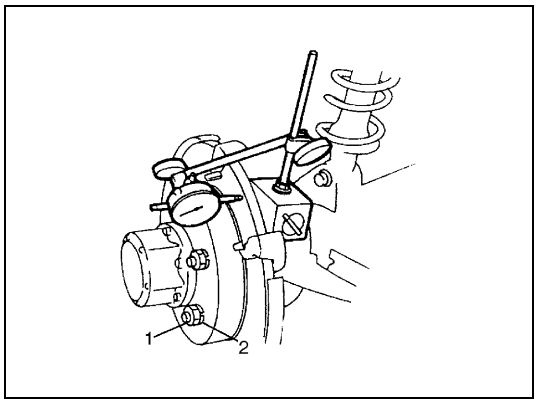

Use wheel nuts (1) and suitable plain washers (2) to hold the disc securely against the hub, then mount a dial indicator as shown and measure the runout at 10 mm (0.39 in.) from the outer edge of the disc.

Disk deflection
Limit: 0.15 mm (0.006 in.)

NOTE:
Check front wheel bearing for looseness before measurement.

Installation

NOTE:
See NOTE at the beginning of this section.

1) Install disc to wheel hub.
2) Install caliper assembly to steering knuckle.
3) Torque caliper carrier bolts to specification.

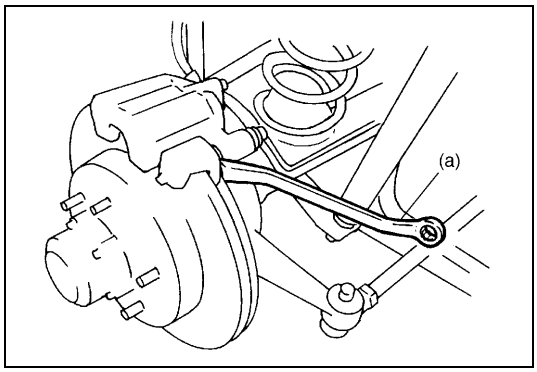

Tightening torque
Brake caliper carrier bolts
(a): 85 N·m (8.5 kg-m, 61.5 lb-ft)

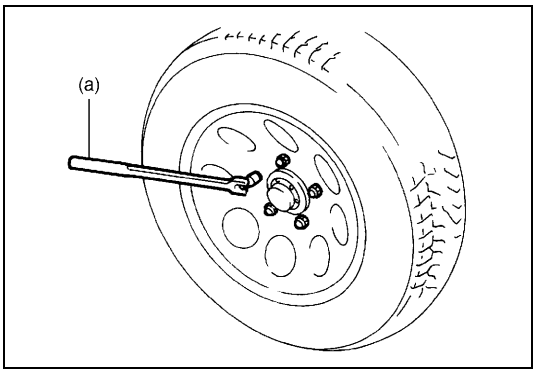

4) Install wheel and torque front wheel nuts to specification.

Tightening torque
Wheel nuts
(a): 95 N·m (9.5 kg-m, 69.0 lb-ft)

5) Upon completion of installation, perform brake test.

Check for Front Brake After Installation

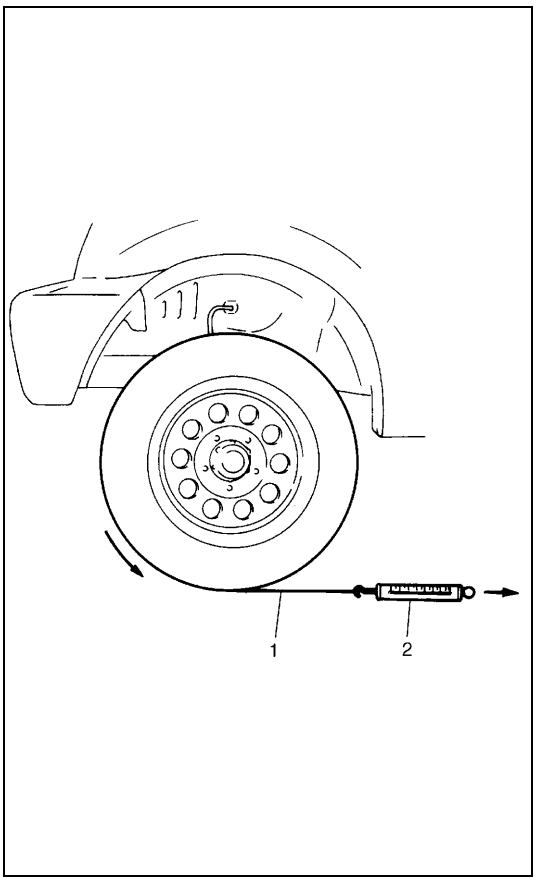

Mount tires and make certain that they rotate smoothly, with a force of less than 3.0 kg (6.6 lb).

NOTE:

For above check the following must be observed.

- **Jack up front wheels, both right and left, off the ground.**
- **Shift transfer shift lever to 2H (rear wheel) position (if equipped) and start engine for a few seconds then stop.**
- **Side figure shows outer periphery of tire.**
- **Be careful not to depress brake pedal when checking tire for rotation.**

If tire rotation is heavy, check the following:

- Piston, piston seal and cylinder slide bush of caliper for installation.
- Wheel bearings for breakage.
- Disc for flatness (Improper flatness brings disc into contact with lining during rotation and makes rotation heavy).

To check this, measure disc deflection.

1. String
2. Spring measure

Master Cylinder

Master cylinder reservoir

Removal

1) Disconnect reservoir lead wire at coupler.

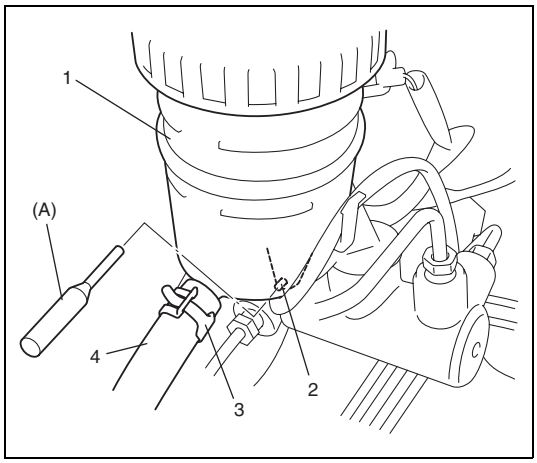

2) Clean outside of reservoir (1).
3) Take out fluid with syringe or such.
4) Loosen clamp (3) and disconnect clutch reservoir hose (4) from reservoir.
5) Remove reservoir connector pin (2) by using special tool.

Special tool
(A): 09922-85811



6) Remove reservoir (1).

CAUTION:
Brake fluid is extremely damaging to paint.
Do not allow brake fluid to get on painted surfaces.

2.	Connector pin
3.	Grommets

Installation

NOTE:

See NOTE at the beginning of this section.

1) When using new grommets, lubricate them with the same fluid as the one to fill reservoir with. Then press-fit grommets to master cylinder. Grommets must be seated in place.

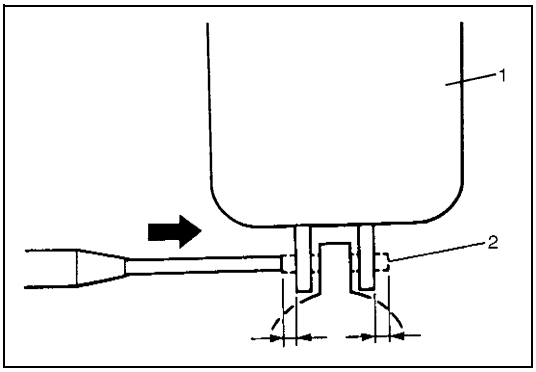

2) Install reservoir (1) and drive in reservoir pin (2).

NOTE:

Drive in reservoir pin (2) till both of its ends at the right and left of reservoir (1) become the same length.

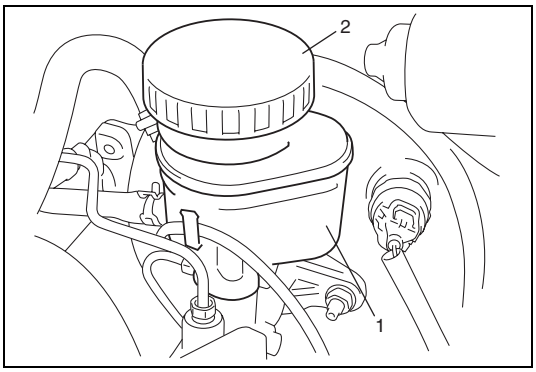

3) Connect clutch reservoir hose to reservoir and tighten clamp securely.

CAUTION:

If clamp is rusty, deformed or loose, replace it with a new one.

4) Connect reservoir lead wire.
5) Fill reservoir (1) with specified fluid.
6) Upon completion of installation, check for fluid leakage.

2. Cap

Master cylinder assembly

Removal

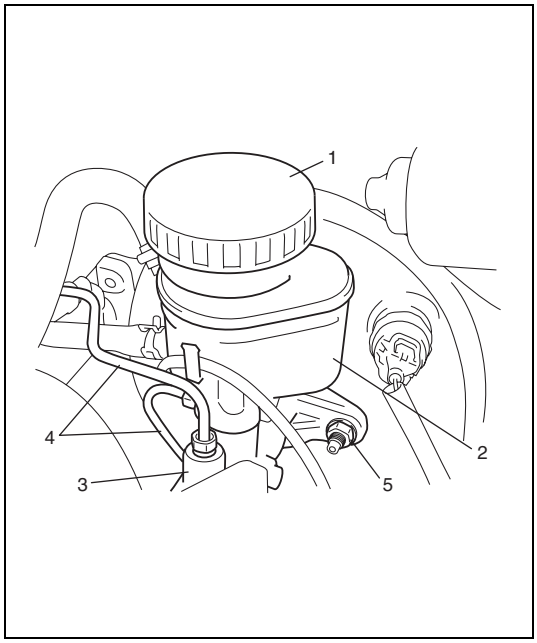

1) Disconnect reservoir lead wire at coupler.
2) Clean around reservoir cap (1) and take out fluid with syringe or such.
3) Loosen clamp and disconnect clutch reservoir hose from reservoir (2).
4) Disconnect brake pipes (4) from master cylinder (3).

CAUTION:
Brake fluid is extremely damaging to paint.
Do not allow brake fluid to get on painted surfaces.

5) Remove master cylinder attaching nuts (5).
6) Remove master cylinder (3).

Installation

NOTE:

- **See NOTE at the beginning of this section.**
- **Check clearance between booster piston rod and primary.**

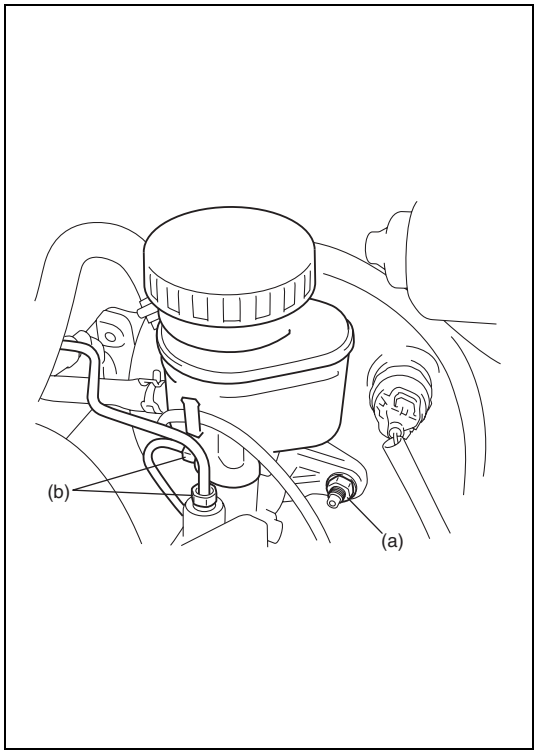

1) Install master cylinder as shown and torque attaching nuts to specification.

Tightening torque
Master cylinder nuts
(a): 13 N·m (1.3 kg-m, 9.5 lb-ft)

2) Attach hydraulic lines and torque flare nuts to specification.

Tightening torque
Brake pipe flare nuts
(b): 16 N·m (1.6 kg-m, 12.0 lb-ft)

3) Connect clutch reservoir hose to reservoir and tighten clamp securely.

CAUTION:
If clamp is rusty, deformed or loose, replace it with a new one.

4) Connect reservoir lead wire.
5) Fill reservoir with specified brake fluid.

6) After installing, bleed air from system (refer to “Air Bleeding of Brake System” in this section) and check brake pedal height and play.
7) Perform brake test and check each installed part for fluid leakage.

Brake Hose / Pipe

Front brake hose / pipe

For left-hand steering vehicle

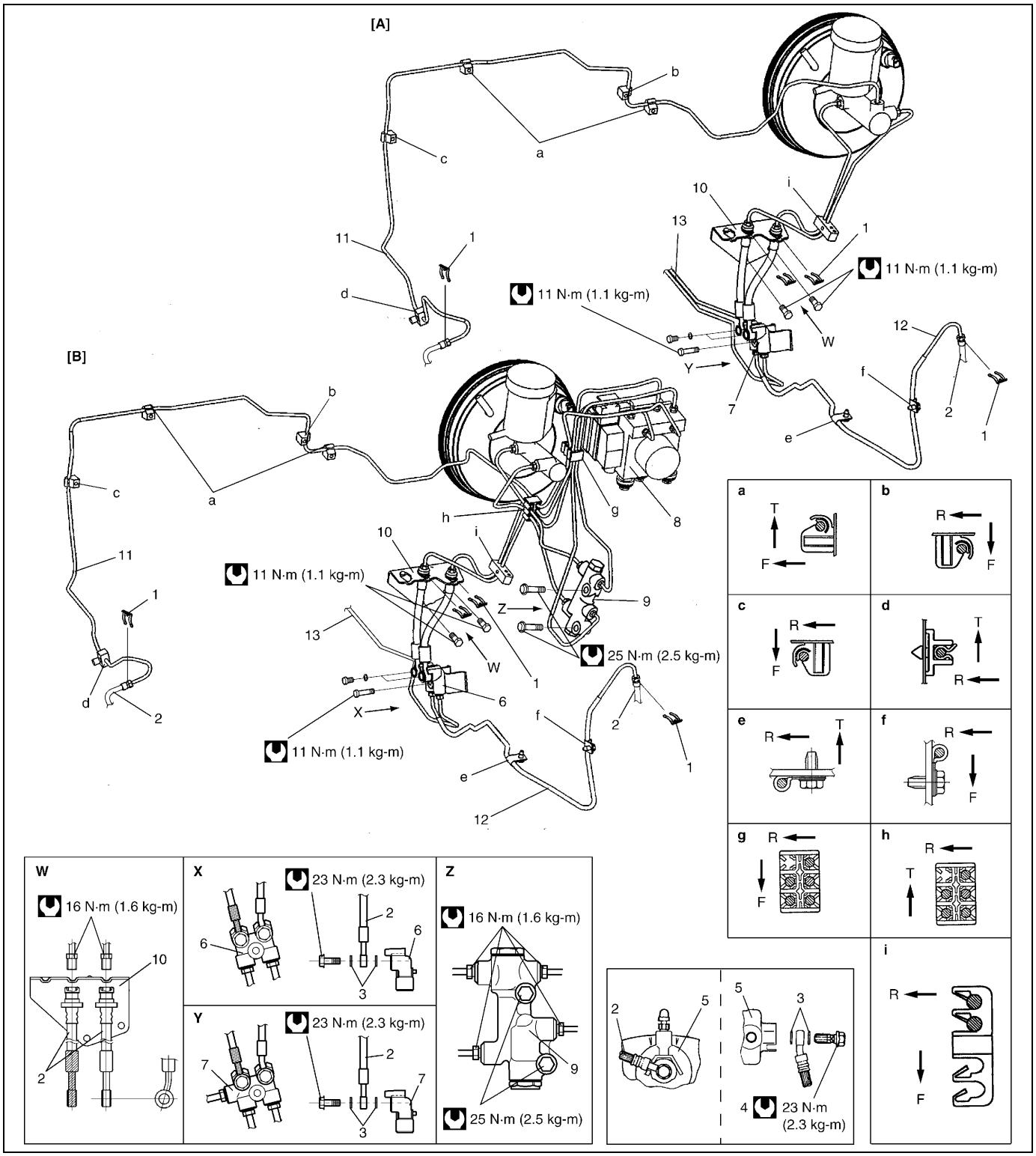

[A] : For vehicle without ABS	X: View X	4. Hose bolt	10. Hose bracket
[B] : For vehicle with ABS	Y: View Y	5. Brake caliper	11. To front right brake caliper
F: Front side	Z: View Z	6. 4 way joint	12. To front left brake caliper
R: Right side	1. E-ring	7. 5 way joint	13. To rear brake
T: Top side	2. Flexible hose	8. ABS hydraulic unit / control module assembly	a-i: Clamp
W: View W	3. Hose washer	9. P & B (proportioning & bypass) valve	Tightening torque

Removal

1) Raise, suitably support vehicle. Remove wheel if necessary.
2) Clean dirt and foreign material from both hose end or pipe end fittings.
3) Drain brake fluid in reservoir.

CAUTION:
Do not allow brake fluid to get on painted surface.
Painted surface will be damaged by brake fluid, flush it with water immediately if any fluid is spilled.

4) Remove brake hose and pipe.

Installation

1) Install brake hose and pipe by reversing removal procedure, noting the following points.
   For installation, make sure that steering wheel is in straightforward position and hose has no twist or kink. Check to make sure that hose doesn't contact any part of suspension, both in extreme right and extreme left turn conditions. If it does at any point, remove and correct. Fill and maintain brake fluid level in reservoir. Bleed brake system.
2) Bleed brake system. Refer to "Air Bleeding of Brake System" in this section.
3) Perform brake test and check installed part for fluid leakage.

Rear brake hose / pipe

Removal

1) Raise, suitably support vehicle. Remove wheel if necessary.
2) Clean dirt and foreign material from both hose end or pipe end fittings.
3) Drain brake fluid in reservoir.

CAUTION:
Do not allow brake fluid to get on painted surface.
Painted surface will be damaged by brake fluid, flush it with water immediately if any fluid is spilled.

4) Remove brake hose and pipe.

Installation

1) Install brake hose and pipe by reversing removal procedure, noting the following points.
   Fill and maintain brake fluid level in reservoir.
2) Bleed brake system referring to "Air Bleeding of Brake System" in this section.
3) Perform brake test and check each installed part for fluid leakage.

CAUTION:
- **Position clamps to white marks on two brake pipes.**
- **Be sure to obtain more than 3 mm (0.118 in.) clearance between axle housing and brake pipe.**
- **Install clamps properly referring to figure below and tighten bolts.**
- **When installing hose, make sure that it has no twist or kink.**

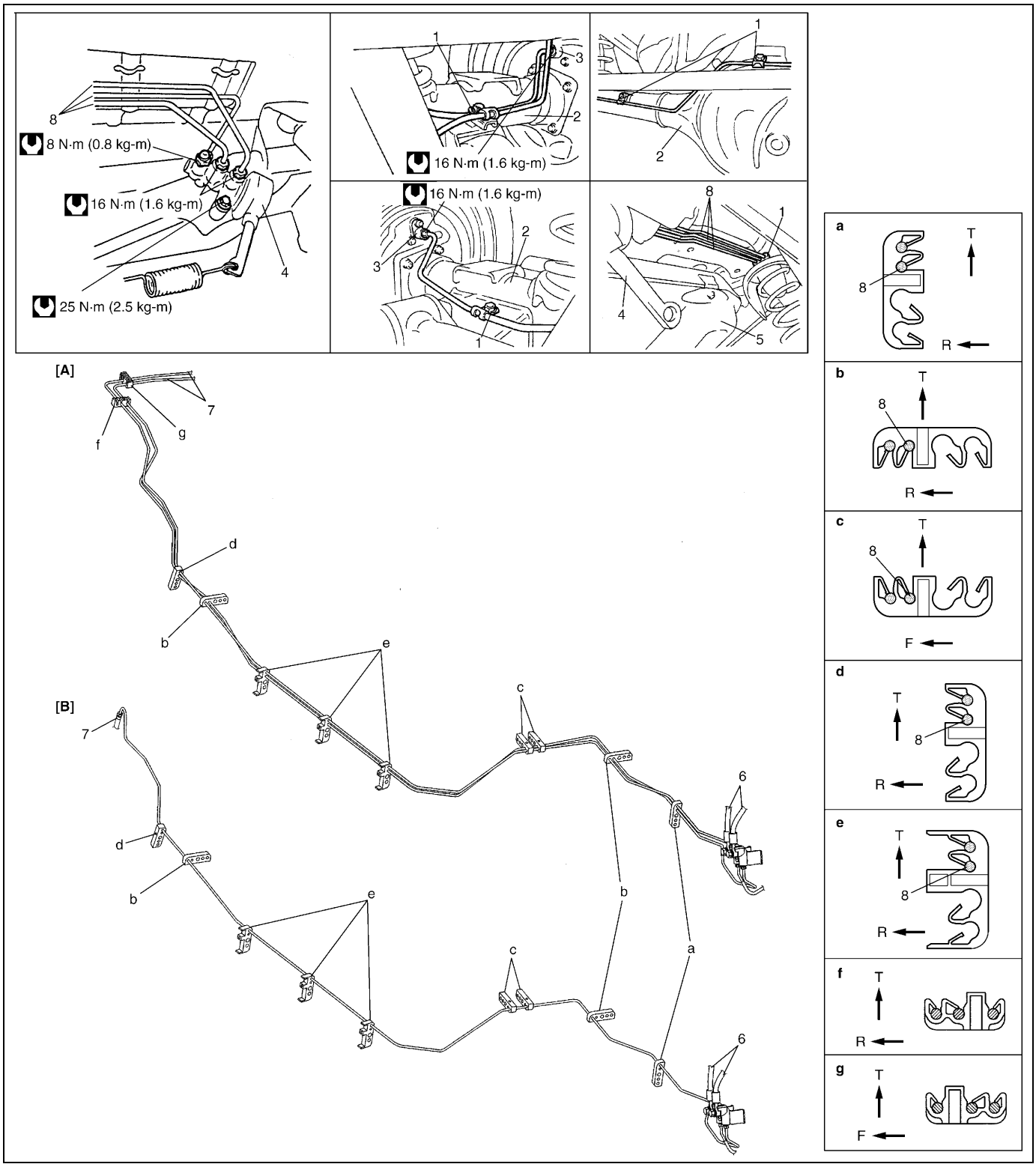

[A]: For vehicle without ABS	1. Clamp	6. To master cylinder
[B]: For vehicle with ABS	2. Rear axle housing	7. To rear brake or LSPV (if equipped)
F: Front side	3. Rear wheel cylinder	8. Brake pipe (vehicle with LSPV)
R: Right side	4. LSPV (if equipped)	a-g: Clamp
T: Top side	5. Fuel tank	Tightening torque

Tightening Torque Specifications

Fastening part		Tightening torque		
		N•m	kg-m	lb-ft
Brake caliper carrier bolt		85	8.5	61.5
Brake caliper pin bolt		27	2.7	19.5
Front brake flexible hose bolt		23	2.3	17.0
Rear brake back plate nut		23	2.3	17.0
Master cylinder nut		13	1.3	9.5
Booster nut		13	1.3	9.5
Brake pipe 5-way 4-way joint bolt		11	1.1	8.0
Brake pipe flare nut		16	1.6	12.0
LSPV bolt / P valve bolt		25	2.5	18.0
Brake bleeder plug	Front caliper	8.5	0.85	6.5
	Rear wheel cylinder, LSPV	8	0.8	6.0
Wheel nut		95	9.5	69.0
Hose bracket bolt		11	1.1	8.0
Booster clevis nut		25	2.5	18.0
Parking brake lever bolt		23	2.3	17.0
Wheel cylinder mounting bolt		9	0.9	6.5
Piston stopper bolt		10	1.0	7.5
LSPV adjust bolt		25	2.5	18.0

Required Service Material

Material	Recommended SUZUKI products	Use
Brake fluid	Indicated on reservoir tank cap or described in owner's manual of vehicle	• To fill master cylinder reservoir. • To clean and apply to inner parts of master cylinder caliper and wheel cylinder when they are disassembled.
Water tight sealant	SEALING COMPOUND 366E 99000-31090	• To apply to mating surfaces of brake back plate and rear wheel cylinder.
Sealant	SUZUKI BOND NO. 1215 99000-31110	• To apply to mating surfaces of brake back plate and rear axle housing. • To apply to mating surfaces of brake back plate and rear wheel bearing retainer.
Rubber grease	Use rubber grease included in spare parts or whose viscosity varies very little even at –40 °C (–40 °F).	• To apply to slide pin of brake caliper carrier.

Special Tool

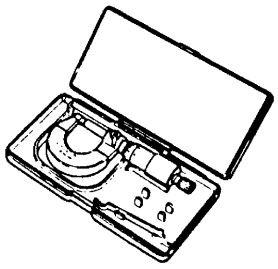 09900-20205 Micrometer (0 – 25 mm)	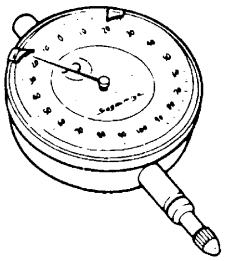 09900-20607 Dial gauge (1/1000 mm)	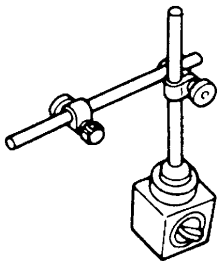 09900-20701 Magnetic stand	 09956-02210 Brake circuit plug
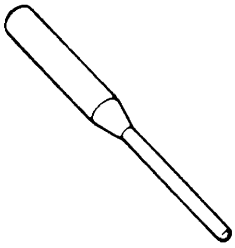 09922-85811 Connector pin remover	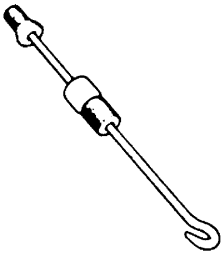 09942-15511 Sliding hammer	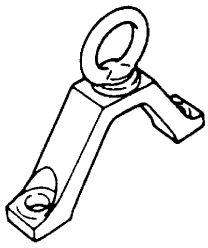 09943-35511 or 09943-35512 Brake drum remover (Front wheel hub remover)	 09950-78220 Flare nut wrench (10 mm)
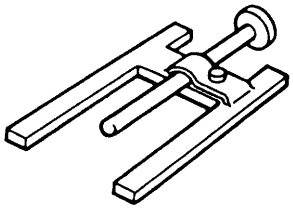 09950-96010 Booster piston rod gauge	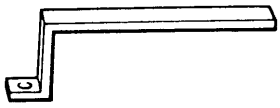 09952-16010 Booster piston rod adjuster	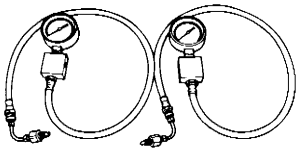 09956-02311 Fluid pressure gauge	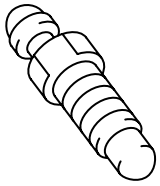 55473-82030 Air bleeder plug

SECTION 6-2

ENGINE GENERAL INFORMATION AND DIAGNOSIS (K9K ENGINE)

WARNING:

For vehicles equipped with a Supplemental Restraint (Air Bag) System:

- **Service on and around the air bag system components or wiring must be performed only by an authorized SUZUKI dealer. Refer to "Air Bag System Components and Wiring Location View" under "General Description" in air bag system section in order to confirm whether you are performing service on or near the air bag system components or wiring. Please observe all WARNINGS and "Precautions" under "On-Vehicle Service" in air bag system section before performing service on or around the air bag system components or wiring. Failure to follow WARNINGS could result in unintentional activation of the system or could render the system inoperative. Either of these two conditions may result in severe injury.**
- **Technical service work must be started at least 90 seconds after the ignition switch is turned to the "LOCK" position and the negative cable is disconnected from the battery. Otherwise, the system may be activated by reserve energy in the Sensing and Diagnostic Module (SDM).**

CONTENTS

General Information 6-2-3
Statement of Cleanliness and Care 6-2-3
General Information on Engine Service 6-2-3
Precaution on fuel system service 6-2-4
Fuel pressure relief confirmation procedure 6-2-4
Fuel leakage check procedure 6-2-4
Engine Diagnosis 6-2-5
General Description 6-2-5
On-Board Diagnostic System 6-2-5
Precaution in Diagnosing Trouble 6-2-7
Engine Diagnostic Flow Table 6-2-9
Diagnostic step details 6-2-11
Diagnostic Trouble Code (DTC) Check 6-2-12
Diagnostic Trouble Code (DTC) Clearance 6-2-12
Diagnostic Trouble Code (DTC) Table 6-2-13
Indicator lamp operation table 6-2-15
Visual Inspection 6-2-18
Engine Basic Check 6-2-19
Fault Finding – Fault Interpretation 6-2-20
DTC P0070 External air temperature sensor circuit malfunction 6-2-20
DTC P0087 Fuel rail/system pressure too low 6-2-21
DTC P0089 Fuel pressure regulator performance problem 6-2-22
DTC P0110 Intake air temperature circuit malfunction 6-2-23
DTC P0115 Engine coolant temperature circuit malfunction 6-2-24
DTC P0180 Fuel temperature sensor circuit malfunction 6-2-25
DTC P0190 Fuel pressure sensor circuit malfunction 6-2-26
DTC P0200 Injector circuit 6-2-27
DTC P0201 Injector circuit malfunction – cylinder 1 6-2-29
DTC P0202 Injector circuit malfunction – cylinder 2 6-2-30
DTC P0203 Injector circuit malfunction – cylinder 3 6-2-31
DTC P0204 Injector circuit malfunction – cylinder 4 6-2-32
DTC P0225 Pedal position sensor 1 circuit 6-2-33
DTC P0231 Fuel pump secondary circuit low 6-2-35
DTC P0235 Turbo pressure sensor circuit malfunction 6-2-36
DTC P0301 Cylinder 1 misfire detected 6-2-38
DTC P0302 Cylinder 2 misfire detected 6-2-39

DTC P0303 Cylinder 3 misfire detected 6-2-40
DTC P0304 Cylinder 4 misfire detected 6-2-41
DTC P0325 Knock sensor circuit malfunction..... 6-2-42
DTC P0335 Crankshaft position sensor circuit malfunction 6-2-43
DTC P0340 Camshaft position sensor circuit malfunction 6-2-44
DTC P0380 Glow plug/heater circuit malfunction..... 6-2-45
DTC P0670 Glow plug module control circuit..... 6-2-45
DTC P0382 Glow plug/heater circuit B malfunction..... 6-2-46
DTC P0400 Exhaust gas recirculation flow malfunction 6-2-47
DTC P2413 Exhaust gas recirculation system performance..... 6-2-47
DTC P0402 Exhaust gas recirculation flow excessive detected 6-2-48
DTC P0403 Exhaust gas recirculation control circuit..... 6-2-48
DTC P0409 Exhaust gas recirculation sensor circuit..... 6-2-49
DTC P0487 Exhaust gas recirculation throttle position control circuit..... 6-2-49
DTC P0480 Radiator cooling fan low speed control system malfunction..... 6-2-50
DTC P0481 Radiator cooling fan high speed control system malfunction..... 6-2-51
DTC P0500 Vehicle speed sensor circuit malfunction 6-2-52
DTC P0513 Incorrect immobilizer key..... 6-2-53
DTC P0530 A/C refrigerant pressure sensor circuit malfunction..... 6-2-54
DTC P0560 System voltage..... 6-2-55
DTC P0604 Control module internal fail..... 6-2-56
DTC P0605 Control module program error..... 6-2-57
DTC P0606 Control module program error..... 6-2-57
DTC P0608 Sensor supply circuit 1 fail..... 6-2-59
DTC P0609 Sensor supply circuit 2 fail..... 6-2-60
DTC P0651 Sensor reference voltage circuit/open..... 6-2-60
DTC P0645 A/C compressor relay control circuit malfunction..... 6-2-61
DTC P0685 Main relay control circuit malfunction..... 6-2-62
DTC P103D A/C signal circuit malfunction 6-2-63
DTC P1641 Additional heater relay circuit 1 6-2-64
DTC P1643 Additional heater relay circuit 2 6-2-65
DTC P2120 Pedal position sensor 2 circuit 6-2-66
DTC P2226 Barometric pressure circuit malfunction 6-2-68
Fault Finding – Customer Complaints 6-2-69
Table 1 No dialogue with the ECM 6-2-70
Table 2 The engine does not start 6-2-71
Table 3 The engine starts with difficulty or starts then stalls.....6-2-72
Table 4 Starting difficult with warm engine 6-2-73
Table 5 Rough idle speed (pumping).....6-2-74
Table 6 Idle speed too high/too low 6-2-75
Table 7 Unexpected acceleration/ deceleration and engine stalling 6-2-76
Table 8 Response fault.....6-2-77
Table 9 Engine stop/stalling.....6-2-78
Table 10 Engine jerking 6-2-79
Table 11 Lack of power.....6-2-80
Table 12 Too much power 6-2-81
Table 13 Excessive consumption 6-2-82
Table 14 Overspeed when lifting off accelerator or changing gear 6-2-83
Table 15 Engine dies on pulling away 6-2-84
Table 16 The engine does not stop 6-2-85
Table 17 Clanking engine, noisy engine 6-2-86
Table 18 Squalling noise.....6-2-87
Table 19 Various mechanical noises 6-2-88
Table 20 Exhaust odours.....6-2-89
Table 21 Diesel odours.....6-2-90
Table 22 Blue, white or black smoke 6-2-91
Table 23 Blue, black or white smoke when accelerating.....6-2-92
Fault Finding – Tests 6-2-93
Test 1: Low Pressure Circuit Check.....6-2-94
Test 2: Electrical Circuit Check.....6-2-94
Test 3: Injector Check.....6-2-95
Test 4: Parameter Check.....6-2-95
Test 5: Air Inlet Circuit Check 6-2-95
Test 6: ECM Check.....6-2-95
Test 7 High Pressure Pump Check.....6-2-96
Test 8: Diesel filter check.....6-2-96
Special Tool 6-2-97

General Information

Statement of Cleanliness and Care

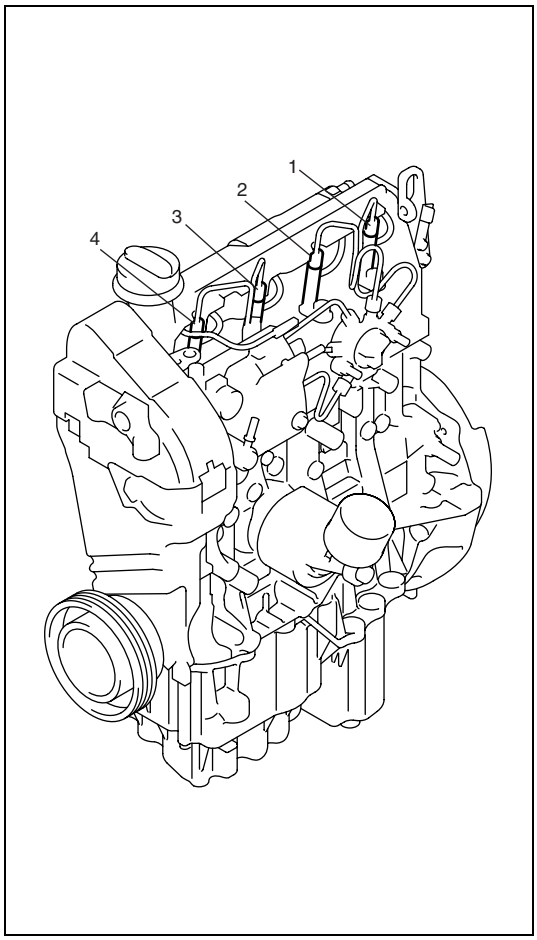

An automobile engine is a combination of many machined, honed, polished and lapped surfaces with tolerances that are measured in the thousands of an millimeter (ten thousands of inch). Accordingly, when any internal engine parts are serviced, care and cleanliness are important. Throughout this section, it should be understood that proper cleaning and protection of machined surfaces and friction areas is part of the repair procedure. This is considered standard shop practice even if not specifically stated.

- A liberal coating of engine oil should be applied to friction areas during assembly to protect and lubricate the surface on initial operation.
- Whenever valve train components, pistons, piston rings, connecting rods, rod bearings and crankshaft journal bearings are removed for service, they should be retained in order. At the time of installation, they should be installed in the same locations and with the same mating surfaces as when removed.
- Battery cables should be disconnected before any major work is performed on the engine. Failure to disconnect cables may result in damage to wire harness or other electrical parts.
- Throughout this manual, the four cylinders of the engine are identified by numbers: No.1 (1), No.2 (2), No.3 (3) and No.4 (4) as counted from flywheel side to crankshaft pulley side.

General Information on Engine Service

The following information on engine service should be noted carefully, as it is important in preventing damage, and in contributing to reliable engine performance.

- When raising or supporting engine for any reason, do not use a jack under oil pan. Due to small clearance between oil pan and oil pump strainer, jacking against oil pan may cause it to be bent against strainer resulting in damaged oil pick-up unit.
- It should be kept in mind, while working on engine, that 12-volt electrical system is capable of violent and damaging short circuits. When performing any work where electrical terminals could possibly be grounded, ground cable of the battery should be disconnected at battery.
- Any time the air cleaner, air cleaner outlet hose, turbocharger, intercooler, intercooler outlet hose, or intake manifold is removed, the intake opening should be covered. This will protect against accidental entrance of foreign material which could follow intake passage into cylinder and cause extensive damage when engine is started.

Precaution on fuel system service

- Work must be done with no smoking, in a well-ventilated area and away from any open flames.
- A small amount of fuel may be released after fuel line is disconnected.
  In order to reduce the chance of personal injury, cover fitting to be disconnected with a shop cloth. Put that cloth in an approved container when disconnection is completed.
- Never run engine with main relay disconnected when engine and exhaust system are hot.

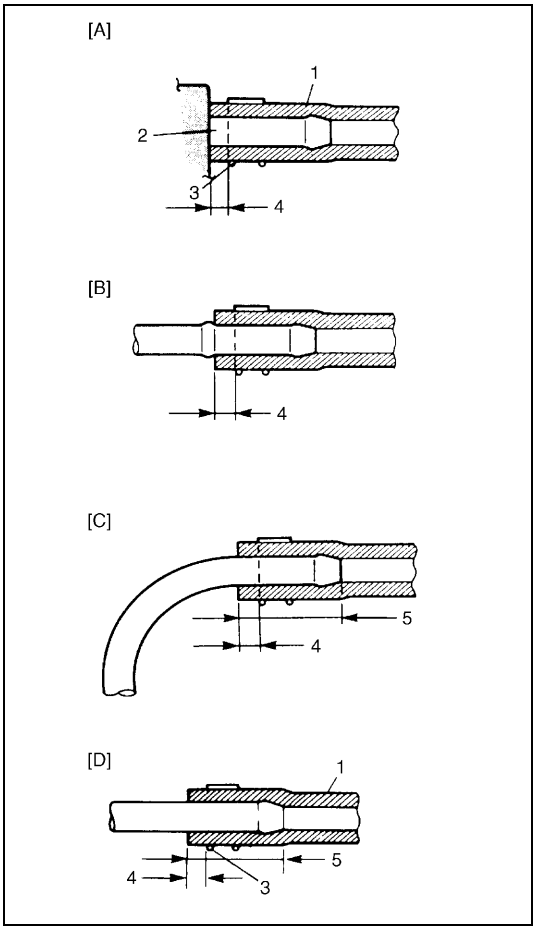

- Fuel or fuel vapor hose connection varies with each type of pipe. When reconnecting fuel or fuel vapor hose, be sure to connect and clamp each hose correctly referring to the figure.
  After connecting, make sure that it has no twist or kink.

[A]:	With short pipe, fit hose as far as it reaches pipe joint as shown.
[B]:	With following type pipe, fit hose as far as its peripheral projection as shown.
[C]:	With bent pipe, fit hose as its bent part as shown or till pipe is about 20 to 30 mm (0.79 – 1.18 in.) into the hose.
[D]:	With straight pipe, fit hose till pipe is, about 20 to 30 mm (0.79 – 1.18 in.) into the hose.
1.	Hose
2.	Pipe
3.	Clamp
4.	Clamp securely at a position 3 to 7 mm (0.12 – 0.27 in.) from hose end.
5.	20 to 30 mm (0.79 – 1.18 in.)

- Before starting any service on fuel system, refer to “Precautions in Fuel Delivery System” in Section 6E2.
- When installing fuel filter union bolt or plug bolt, always use new gasket and tighten it to specified torque.
- When installing injector, fuel feed pipe or fuel pressure regulator, lubricate its O-ring with spindle oil or fuel.
- When connecting fuel pipe flare nut, first tighten flare nut by hand and then tighten it to specified torque, using back-up wrench.

Fuel pressure relief confirmation procedure

The fuel system installed on the engine injects the high pressure fuel into the engine. Therefore, before starting fuel system service, confirm that fuel high pressure line is not under pressure referring to “Fuel Pressure Relief Confirmation Procedure” in Section 6E2.

Fuel leakage check procedure

After performing any service on fuel system, refer to “Fuel Leakage Check” in Section 6E2 to see if there is any fuel leakage.

Engine Diagnosis

General Description

The engine and emission control system in this vehicle are controlled by ECM. ECM has an On-Board Diagnostic system which detects a malfunction in this system and abnormality of those parts that influence the engine exhaust emission. When diagnosing engine troubles, be sure to have full understanding of the outline of “On-Board Diagnostic System” and each item in “Precaution in Diagnosing Trouble” and execute diagnosis according to “Engine Diagnostic Flow Table” in this section.
There is a close relationship between the engine mechanical, engine cooling system, exhaust system, etc. and the engine and emission control system in their structure and operation. In case of an engine trouble, even when the warning light (MIL, injection warning light, and/or red stop warning light) doesn’t turn ON, it should be diagnosed according to this flow table.

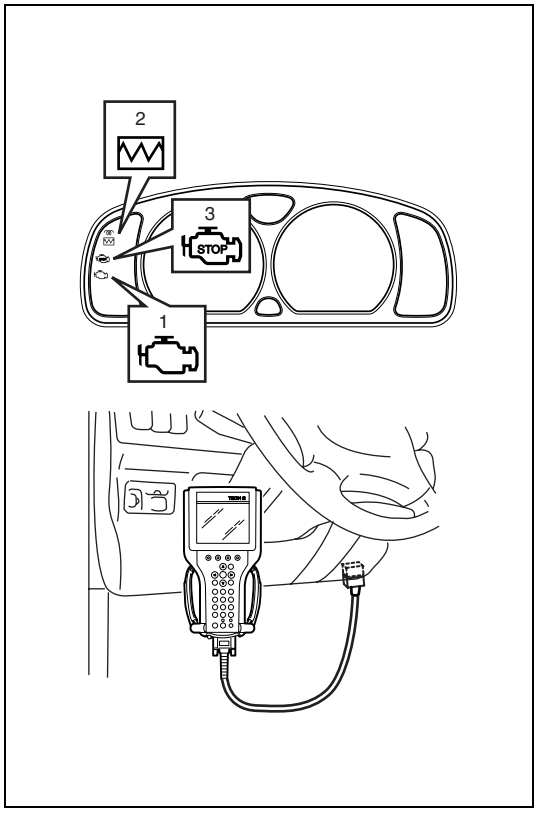

On-Board Diagnostic System

ECM in this vehicle has the following functions.

- When the ignition switch is turned ON with the engine at a stop, MIL (1), injection warning light (gravity 1 fault) (2) and/or red stop warning light (gravity 2 fault) (3) turns ON to check the warning lights and its circuit.
- When ECM detects a malfunction which gives an adverse effect to vehicle emission while the engine is running, it makes the malfunction indicator lamp in the meter cluster of the instrument panel turn ON and stores the malfunction area in its memory.
- When a malfunction is detected, a malfunction in some areas in the system and driving cycles then are stored in ECM memory (For the details, refer to description on “Indicator Lamp Operation Table” in this section.)

Warm-Up Cycle

A “warm-up cycle” means sufficient vehicle operation such that the coolant temperature has risen by at least 22 °C (40 °F) from engine starting and reaches a minimum temperature of 70 °C (160 °F).

Driving Cycle

A “driving cycle” consists of two parts, engine startup and engine shutoff.

3 Driving Cycle Detection Logic

The malfunction detected in the first driving cycle is stored in ECM memory (in the form of pending DTC) but the malfunction indicator lamp does not light at this time. It does not light up at the second detection of same malfunction also in the next driving cycle. It lights up at the third detection of same malfunction also in the third driving cycle.

Pending Diagnostic Trouble Code (DTC)

Pending DTC means a DTC detected and stored temporarily at first or second driving cycle of the DTC which is detected in the 3 driving cycle detection logic.

Data Link Connector (DLC)

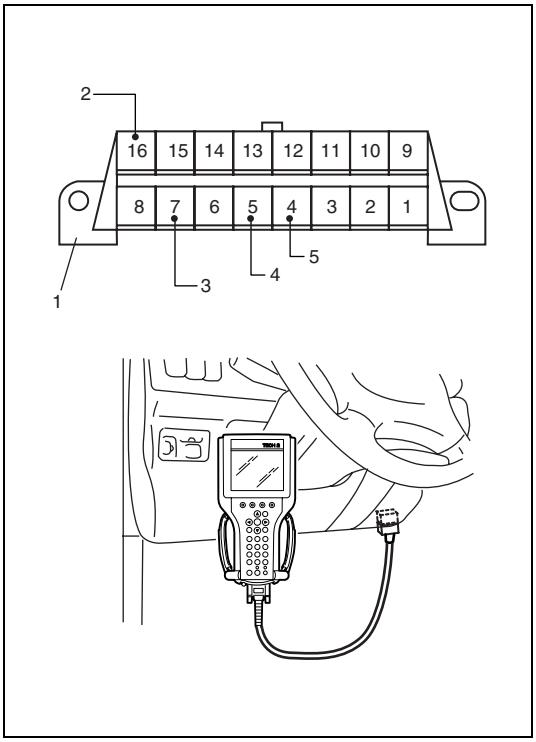

DLC (1) is in compliance with SAE J1962 in its installation position, the shape of connector and pin assignment.

K line (3) of ISO 9141 is used for SUZUKI scan tool to communication with ECM, ABS control module and immobilizer control module.

2.	B+
4.	ECM ground
5.	Body ground

Precaution in Diagnosing Trouble

- Don't disconnect couplers from ECM, battery cable from battery, ECM ground wire harness from engine or main fuse before confirming diagnostic information (DTC) stored in ECM memory.
- Diagnostic information stored in ECM memory can be cleared as well as checked by using SUZUKI scan tool. Before using scan tool, read its Operator's (Instruction) Manual carefully to have good understanding as to what functions are available and how to use it.
- Be sure to read "Precautions for Electrical Circuit Service" in Section 0A before inspection and observe what is written there.
- For the connector number and the terminal number described in fault finding procedure, refer to "Wiring Diagram Manual" described in FOREWORD of this manual.
- Fuel injector calibration code registration
  If fuel injector is replaced, register fuel injector calibration code into ECM by performing procedure described in "ECM Registration" of Section 6E2.
- Replacement of the ECM
  Before replacement of the ECM, save the data of vehicle specification (injector calibration code and vehicle configurations (equipment such as additional heater plug and air conditioning)) into SUZUKI scan tool from ECM according to procedure described in "ECM Registration" of Section 6E2.
- ECM substitution
  – The data of immobilizer control system registered with ECM cannot be reprogrammed. Therefore, check for engine control system can not be performed using known-good ECM installed in other normal vehicle.
  – In case that new ECM, on which the data of immobilizer control system is not programmed, is used for inspecting the engine control system, the ECM cannot be used for the other vehicles because the data of immobilizer control system registered with the ECM cannot be reprogrammed.

Malfunction Indicator Lamp (MIL) Check

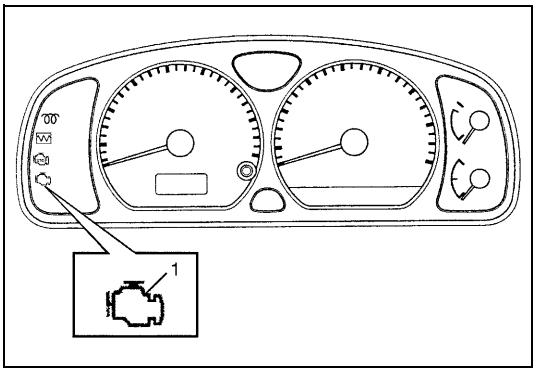

Malfunction indicator lamp (1) signals an antipollution system failure.
Check that it lights up for 3 seconds after the ignition switch is turned on, and then it goes off (automatic test procedure).
If light remains ON after an automatic test procedure, go to “Diagnostic Trouble Code (DTC) Check” in this section.
After the ignition switch is turned on, if light does not light up or remains ON, check that malfunction indicator lamp circuit.

Glow Indicator Light and Injection Warning Light (Gravity 1 Fault) Check

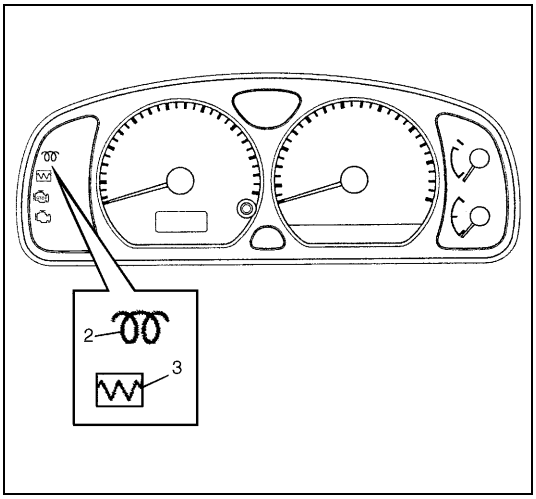

This light serves to indicate that the glow plugs are working and to signal system failures.

- Glow plug indicator light (2):
  Check that it lights while glow plugs are operating.
- Injection warning light (3):
  Check that it lights up for 3 seconds after the ignition switch is turned on, and then it goes off (automatic test procedure).

If lights (glow indicator light and injection warning light) remain ON after end of the preheating period and an automatic test procedure, go to “Diagnostic Trouble Code (DTC) Check” in this section.
After the ignition switch is turned on, if lights (glow indicator light and injection warning light) does not light up or remains ON, check that glow indicator light circuit or injection warning light (gravity 1 fault) circuit.

Red Stop Warning Light (Gravity 2 Fault) Check

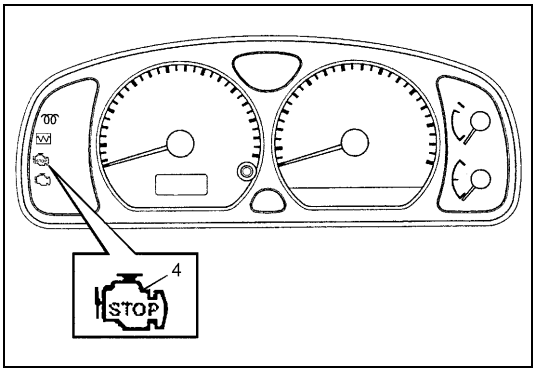

Red stop warning light (4) serves to indicate proper functioning and to signal system failures.
Check that it lights up for 3 seconds after the ignition switch is turned on, and then it goes off (automatic test procedure).
If light remains ON after an automatic test procedure, go to “Diagnostic Trouble Code (DTC) Check” in this section.
After the ignition switch is turned on, if light does not light up or remains ON, check that red stop warning light (gravity 2 fault) circuit.

Engine Diagnostic Flow Table

Numbers of each step correspond to the numbers of the items after this table.
Refer to “Diagnostic Step Details” following this table for the details of each step.

Step	Action	Yes	No
1	Customer Complaint Analysis Perform customer complaint analysis. Was customer complaint analysis performed?	Go to Step 2.	Perform customer complaint analysis.
2	Visual Inspection Perform visual inspection referring to “Visual Inspection” in this section. Is there any faulty condition?	Repair or replace malfunction part and then go to Step 3.	Go to Step 3.
3	Diagnostic Trouble Code Check and Record and clearance Check for DTC referring to “Diagnostic Step Details”. Is there any DTC(s)?	1) Record and clear DTC referring to “Diagnostic Trouble Code (DTC) Clearance” in this section. 2) Go to Step 5.	Go to Step 4.
4	Engine Basic Check and Fault Finding – Customer Complaints Check and repair according to “Engine Basic Check” and “Fault Finding – Customer Complaints” in this section. Is there any faulty condition?	Repair or replace malfunction part and then go to Step 8.	Go to Step 8.
5	Recheck DTC Recheck DTC referring to “Diagnostic Step Details”. Is there any DTC(s)?	Go to Step 6.	Go to Step 7.
6	Troubleshooting for DTC Check and repair according to applicable DTC diagnostic flow table in this section. Is there any faulty condition?	Repair or replace malfunction part and then go to Step 8.	Go to Step 7.
7	Check for intermittent problems Check for intermittent problems referring to “Diagnostic Step Details”. Is there any faulty condition?	Repair or replace malfunction part and then go to Step 8.	Go to Step 8.
8	Final Confirmation Test 1) Clear DTC if any. 2) Perform final confirmation test referring to “Diagnostic Step Details”. 3) Is there any problem symptom, DTC or abnormal condition?	Go to Step 5.	End.

Customer Problem Inspection Form (Example)

User name:	Model:	VIN:	
Date of issue:	Date Reg.	Date of problem:	Mileage:
PROBLEM SYMPTOMS			
☐Difficult Starting		**☐Poor Driveability**	
☐No cranking ☐No initial combustion ☐Poor starting at (☐Cold/☐Warm/☐Always) ☐Other _____		☐Hesitation on acceleration ☐Back fire/After fire ☐Loss of power ☐Surging ☐Abnormal knocking ☐Other _____	
☐Poor Idling		**☐Engine Stall when**	
☐Poor fast idle ☐Abnormal idling speed (☐High ☐Low) (r/min.) ☐Unstable ☐Hunting (r/min. to r/min.) ☐Other _____		☐Immediately after start ☐Accel. pedal is depressed ☐Accel. pedal is released ☐Load is applied ☐A/C ☐Electrical load ☐P/S ☐Other _____	
☐OTHERS:			
VEHICLE/ENVIRONMENTAL CONDITION WHEN PROBLEM OCCURS			
Environmental Condition			
Weather	☐Fair ☐Cloudy ☐Rain ☐Snow ☐Always ☐Other _____ (°F/ °C)		
Temperature	☐Hot ☐Warm ☐Cool ☐Cold ☐Always		
Frequency	☐Always ☐Sometimes (times/ day, month) ☐Only once ☐Under certain condition		
Road	☐Urban ☐Suburbs ☐Highways ☐Mountainous (☐Uphill ☐Downhill) ☐Paved road ☐Gravel		
	☐Other _____		
Vehicle Condition			
Engine condition	☐Cold ☐Warming up phase ☐Warmed up ☐Always ☐Other at starting ☐Immediately after start/ ☐Racing without load ☐Engine speed (r/min.)		
Vehicle condition	☐During driving: ☐Constant speed (km/h, mile/h) ☐Accelerating ☐Decelerating ☐Right hand corner ☐Left hand corner ☐When shifting (Lever position) ☐At stop ☐Other ( )		
Malfunction indicator lamp condition	☐Always ON ☐Sometimes ON ☐Always OFF ☐Good condition ☐Flashing		
Diagnostic trouble code	First check: ☐No code ☐Malfunction code ( )		
	Second check: ☐No code ☐Malfunction code ( )		

NOTE:

The above form is standard sample. It should be modified according to conditions characteristic of each market.

Diagnostic step details

1. Customer Complaint Analysis

Record details of the problem (failure, complaint) and how it occurred as described by the customer. For this purpose, use of such an inspection form will facilitate collecting information to the point required for proper analysis and diagnosis.

2. Visual Inspection

As a preliminary step, be sure to perform visual check of the items that support proper function of the engine referring to “Visual Inspection” in this section.

3. Diagnostic Trouble Code (DTC) Check, Record and Clearance

First, check DTC, referring to “Diagnostic Trouble Code (DTC) Check” in this section. If DTC is indicated, record and clear DTC by referring to “Diagnostic Trouble Code (DTC) Clearance” in this section.
Attempt to diagnose a trouble based on DTC in this step only or failure to clear the DTC in this step will lead to incorrect diagnosis, trouble diagnosis of a normal circuit or difficulty in troubleshooting.

4. Engine Basic Check and Fault Finding – Customer Complaints

Perform basic engine check according to the “Engine Basic Check” in this section first. When the end of the flow table has been reached, check the parts of the system suspected as a possible cause referring to “Fault Finding – Customer Complaints” in this section and based on symptoms appearing on the vehicle (symptoms obtained through steps of customer complaint analysis, trouble symptom confirmation and/or basic engine check) and repair or replace faulty parts, if any.

5. Recheck DTC

Refer to “Diagnostic Trouble Code (DTC) Check” in this section for checking procedure.

6. Troubleshooting for DTC (See each DTC Diag. Flow Table)

Based on the DTC indicated in Step 5 and referring to the applicable DTC diag. flow table in this section, locate the cause of the trouble, namely in a sensor, switch, wire harness, connector, actuator, ECM or other part and repair or replace faulty parts.

7. Check for Intermittent Problem

Check parts where an intermittent trouble is easy to occur (e.g., wire harness, connector, etc.), referring to “Intermittent and Poor Connection” in Section 0A and related circuit of DTC recorded in Step 5.

8. Final Confirmation Test

Confirm that the problem symptom has gone and the engine is free from any abnormal conditions. If what has been repaired is related to the DTC, clear the DTC once and then recheck DTC and confirm that no DTC is indicated.

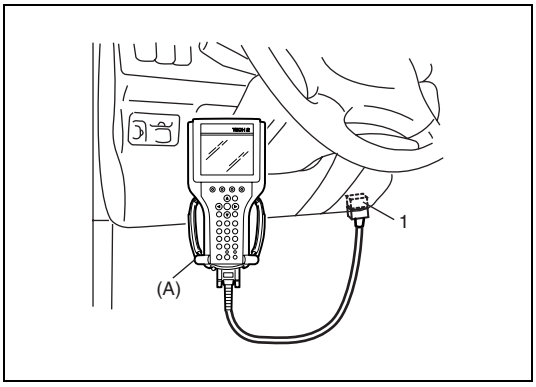

Diagnostic Trouble Code (DTC) Check

1) Prepare SUZUKI scan tool.
2) Connect it to data link connector (DLC) (1) located on underside of instrument panel at driver's seat side.

Special tool
(A): SUZUKI scan tool

3) Turn ignition switch ON.
4) Read DTC according to instructions displayed on scan tool and print them or write them down. Refer to scan tool operator's manual for further details.
   If communication between scan tool and ECM is not possible, check if scan tool is communicable by connecting it to ECM in another vehicle. If communication is possible in this case, scan tool is in good condition. Then check data link connector and serial data line (circuit) in the vehicle with which communication was not possible.
5) After completing the check, turn ignition switch off and disconnect scan tool from data link connector.

Diagnostic Trouble Code (DTC) Clearance

1) Connect SUZUKI scan tool to data link connector in the same manner as when making this connection for Diagnostic Trouble Code (DTC) Check.
2) Turn ignition switch OFF and then ON (but engine at stop).
3) Erase DTC according to instructions displayed on scan tool. Refer to scan tool operator's manual for further details.
4) After completing the clearance, turn ignition switch OFF and disconnect scan tool from data link connector.

Diagnostic Trouble Code (DTC) Table

DTC No. (Generic scan tool)	DTC No. (SUZUKI scan tool)	Detecting Item	Detecting Condition (DTC will set when detecting:)
P0070	P0070	External Air Temperature Sensor Circuit Malfunction	External air temperature sensor signal low or high input
–	P0087	Fuel Rail/System Pressure Too Low	Fuel flow actuator control signal circuit low or high input
P0089	P0089	Fuel Pressure Regulator Performance Problem	Fuel pressure regulator control signal low or high input
P0110	P0110	Intake Air Temperature Circuit Malfunction	Intake air temperature sensor signal low or high input
P0115	P0115	Engine Coolant Temperature Circuit Malfunction	Engine coolant temperature sensor signal low or high input
P0180	P0180	Fuel Temperature Sensor Circuit Malfunction	Fuel temperature sensor signal low or high input
P0190	P0190	Fuel Pressure Sensor Circuit Malfunction	• Fuel pressure sensor signal low or high input • Poor performance of fuel pressure sensor
P0200	P0200	Injector Circuit	Fuel injector control signal low or high input
P0201	P0201	Injector Circuit Malfunction – Cylinder 1	Fuel injector No.1 control signal circuit open
P0202	P0202	Injector Circuit Malfunction – Cylinder 2	Fuel injector No.2 control signal circuit open
P0203	P0203	Injector Circuit Malfunction – Cylinder 3	Fuel injector No.3 control signal circuit open
P0204	P0204	Injector Circuit Malfunction – Cylinder 4	Fuel injector No.4 control signal circuit open
P0225	P0225	Pedal Position Sensor 1 Circuit	Pedal position sensor 1 signal low or high input
P0231	P0231	Fuel Pump Secondary Circuit Low	Fuel flow actuator control signal circuit open or short
P0235	P0235	Turbo Pressure Sensor Circuit Malfunction	Turbo pressure sensor signal low or high input
P0301	P0301	Cylinder 1 Misfire Detected	Detection of engine speed fluctuation (problem on cylinder No.1)
P0302	P0302	Cylinder 2 Misfire Detected	Detection of engine speed fluctuation (problem on cylinder No.2)
P0303	P0303	Cylinder 3 Misfire Detected	Detection of engine speed fluctuation (problem on cylinder No.3)
P0304	P0304	Cylinder 4 Misfire Detected	Detection of engine speed fluctuation (problem on cylinder No.4)
–	P0325	Knock Sensor Circuit Malfunction	Knock sensor signal circuit low or high input
–	P0335	Crankshaft Position Sensor Circuit Malfunction	Crankshaft position sensor signal not inputted or incorrect signal inputted
P0340	P0340	Camshaft Position Sensor Circuit Malfunction	Camshaft position sensor signal not inputted or inconsistent signal inputted
P0670	P0380	Glow Plug Module Control Circuit	Detects an error of pre-heating control or glow plug failure

DTC No. (Generic scan tool)	DTC No. (SUZUKI scan tool)	Detecting Item	Detecting Condition (DTC will set when detecting:)
P0382	P0382	Glow Plug / Heater Circuit B Malfunction	Pre / post-heating control signal low or high input
P0400	P0400	Exhaust Gas Recirculation Flow Malfunction	Excessive or insufficient EGR flow
P2413		Exhaust Gas Recirculation System Performance	Poor performance of EGR valve
P0402	P0403	Exhaust Gas Recirculation Flow Excessive Detected	EGR valve actuator circuit shorted to ground circuit
P0403		Exhaust Gas Recirculation Control Circuit	EGR valve actuator circuit open or shorted to power circuit
P0409	P0409	Exhaust Gas Recirculation Sensor Circuit	EGR valve position sensor signal low or high input
P0487		Exhaust Gas Recirculation Throttle Position Control Circuit	EGR valve position sensor circuit open or short
–	P0480	Radiator Cooling Fan Low Speed Control System Malfunction	Radiator low speed cooling fan control circuit low or high input
–	P0481	Radiator Cooling Fan High Speed Control System Malfunction	Radiator high speed cooling fan control circuit low or high input
–	P0500	Vehicle Speed Sensor Circuit Malfunction	Vehicle speed sensor signal not inputted or incorrect signal inputted
–	P0513	Incorrect Immobilizer Key	Communication error with immobilizer control module
–	P0530	A/C Pressure Sensor Circuit Malfunction	A/C pressure sensor signal circuit low or high input
–	P0560	System Voltage	Power supply low or high input
–	P0604	Control Module Internal Fail	Engine control module internal faulty (system error)
P0605	P0606	Control Module Program Error	Engine control module internal faulty (system error)
–	P0608	Sensor Supply Circuit 1 Fail	Poor performance of ECM
P0651	P0609	Sensor Reference Voltage Circuit/Open	Sensor power supply circuit low or high input
–	P0645	A/C Relay Control Circuit	A/C relay signal circuit low or high input
P0685	P0685	Main Relay Control Circuit Malfunction	Main relay control signal low or high input
–	P103D	A/C Signal Circuit Malfunction	A/C signal circuit low or high input
–	P1641	Additional Heater Relay Circuit 1	Additional heater relay 1 signal circuit low or high input
–	P1642	Additional Heater Relay Circuit 2	Additional heater relay 2 signal circuit low or high input
P2120	P2120	Pedal Position Sensor 2 Circuit	Pedal position sensor 2 signal low or high input
P2226	P2226	Barometric Pressure Circuit	Barometric pressure is lower or higher than specification

Indicator lamp operation table

DTC No. (Generic scan tool)	DTC No. (SUZUKI scan tool)	Detecting Item	Malfunction Indicator Lamp (MIL)	Glow Indicator light	Injection Warning Light (Gravity 1 Fault)	Red Stop Warning Light (Gravity 2 Fault)
P0070	P0070 (DF022)	External Air Temperature Sensor Circuit Malfunction	–	–	–	–
–	P0087 (DF247)	Fuel Rail/System Pressure Too Low	–	1 driving cycle	1 driving cycle	1 driving cycle
P0089	P0089 (DF137)	Fuel Pressure Regulator Performance Problem	–	1 driving cycle	1 driving cycle	1 driving cycle
P0110	P0110 (DF128)	Intake Air Temperature Circuit Malfunction	–	–	–	–
P0115	P0115 (DF002)	Engine Coolant Temperature Circuit Malfunction	–	–	–	–
P0180	P0180 (DF021)	Fuel Temperature Sensor Circuit Malfunction	–	–	–	–
P0190	P0190 (DF117)	Fuel Pressure Sensor Circuit Malfunction	–	1 driving cycle	1 driving cycle	1 driving cycle
P0200	P0200 (DF136)	Injector Circuit	–	1 driving cycle	1 driving cycle	–
P0201	P0201 (DF099)	Injector Circuit Malfunction – Cylinder 1	*3 driving cycles	1 driving cycle	1 driving cycle	–
P0202	P0202 (DF100)	Injector Circuit Malfunction – Cylinder 2	*3 driving cycles	1 driving cycle	1 driving cycle	–
P0203	P0203 (DF101)	Injector Circuit Malfunction – Cylinder 3	*3 driving cycles	1 driving cycle	1 driving cycle	–
P0204	P0204 (DF102)	Injector Circuit Malfunction – Cylinder 4	*3 driving cycles	1 driving cycle	1 driving cycle	–
P0225	P0225 (DF071)	Pedal Position Sensor 1 Circuit	–	1 driving cycle	1 driving cycle	–
P0231	P0231 (DF126)	Fuel Pump Secondary Circuit Low	–	1 driving cycle	1 driving cycle	1 driving cycle
P0235	P0235 (DF115)	Turbo Pressure Sensor Circuit Malfunction	–	*1 driving cycle	*1 driving cycle	–
P0301	P0301 (DF130)	Cylinder 1 Misfire Detected	–	1 driving cycle	1 driving cycle	–
P0302	P0302 (DF131)	Cylinder 2 Misfire Detected	–	1 driving cycle	1 driving cycle	–
P0303	P0303 (DF132)	Cylinder 3 Misfire Detected	–	1 driving cycle	1 driving cycle	–
P0304	P0304 (DF133)	Cylinder 4 Misfire Detected	–	1 driving cycle	1 driving cycle	–
–	P0325 (DF134)	Knock Sensor Circuit Malfunction	–	–	–	–

DTC No. (Generic scan tool)	DTC No. (SUZUKI scan tool)	Detecting Item	Malfunction Indicator Lamp (MIL)	Glow Indicator light	Injection Warning Light (Gravity 1 Fault)	Red Stop Warning Light (Gravity 2 Fault)
P0335	P0335 (DF023)	Crankshaft Position Sensor Circuit Malfunction	–	*1 driving cycle	*1 driving cycle	*1 driving cycle
P0340	P0340 (DF116)	Camshaft Position Sensor Circuit Malfunction	–	–	–	–
P0670	P0380 (DF061)	Glow Plug Module Control Circuit	–	–	–	–
P0382	P0382 (DF045)	Glow Plug / Heater Circuit B Malfunction	–	–	–	–
P0400	P0400 (DF163)	Exhaust Gas Recirculation Flow Malfunction	–	1 driving cycle	1 driving cycle	–
P2413		Exhaust Gas Recirculation System Performance	*3 driving cycles	1 driving cycle	1 driving cycle	–
P0402	P0403 (DF027)	Exhaust Gas Recirculation Flow Excessive Detected	*3 driving cycles	1 driving cycle	1 driving cycle	–
P0403		Exhaust Gas Recirculation Control Circuit	–	–	–	–
P0409	P0409 (DF084)	Exhaust Gas Recirculation Sensor Circuit	–	1 driving cycle	1 driving cycle	–
P0487		Exhaust Gas Recirculation Throttle Position Control Circuit	*3 driving cycles	1 driving cycle	1 driving cycle	–
–	P0480 (DF048)	Radiator Cooling Fan Low Speed Control System Malfunction	–	–	–	–
–	P0481 (DF049)	Radiator Cooling Fan High Speed Control System Malfunction	–	–	–	–
P0500	P0500 (DF004)	Vehicle Speed Sensor Circuit Malfunction	–	–	–	–
–	P0513 (DF015)	Incorrect Immobilizer Key	–	–	–	–
–	P0530 (DF113)	A/C Pressure Sensor Circuit Malfunction	–	–	–	–
–	P0560 (DF012)	System Voltage	–	–	–	–
–	P0604 (DF093)	Control Module Internal Fail	–	1 driving cycle	1 driving cycle	1 driving cycle
P0605	P0606 (DF001)	Control Module Program Error	*3 driving cycles	*1 driving cycle	*1 driving cycle	*1 driving cycle
–	P0608 (DF091)	Sensor Supply Circuit 1 Fail	–	1 driving cycle	1 driving cycle	1 driving cycle

DTC No. (Generic scan tool)	DTC No. (SUZUKI scan tool)	Detecting Item	Malfunction Indicator Lamp (MIL)	Glow Indicator light	Injection Warning Light (Gravity 1 Fault)	Red Stop Warning Light (Gravity 2 Fault)
P0651	P0609 (DF092)	Sensor Reference Voltage Circuit/Open	–	1 driving cycle	1 driving cycle	–
–	P0645 (DF111)	A/C Relay Control Circuit	–	–	–	–
P0685	P0685 (DF125)	Main Relay Control Circuit Malfunction	–	–	–	–
–	P103D (DF052)	A/C Signal Circuit Malfunction	–	–	–	–
–	P1641 (DF124)	Additional Heater Relay Circuit 1	–	–	–	–
–	P1642 (DF123)	Additional Heater Relay Circuit 2	–	–	–	–
P2120	P2120 (DF073)	Pedal Position Sensor 2 Circuit	–	1 driving cycle	1 driving cycle	–
P2226	P2226 (DF024)	Barometric Pressure Circuit	–	–	–	–

NOTE:

- **For indicator/warning light operation of items with *, refer to corresponding Faulty Finding – Fault Interpretation in this section.**
- **"–" marked in above table indicates that indicator/warning light does not light.**
- **DTC in ( ) is only reference No. and not readable with SUZUKI scan tool.**

Visual Inspection

Visually check the following parts and systems.

INSPECTION ITEM	REFERRING SECTION
Engine oil - - - - - level, leakage	Section 0B
Engine coolant - - - - - level, leakage	Section 0B
Fuel - - - - - level, leakage	Section 0B
Air cleaner element - - - - - dirt, clogging	Section 0B
Battery - - - - - fluid level, corrosion of terminal	
Drive belt - - - - - tension, damage	Section 0B
Vacuum hoses of air intake system - - - - - disconnection, looseness, deterioration, bend	
Connectors of electric wire harness - - - disconnection, friction	
Fuses - - - - - burning	
Parts - - - - - installation, bolt - - - - - looseness	
Parts - - - - - deformation	
Other parts that can be checked visually Also add the following items at engine start, if possible.	
Malfunction indicator lamp operation	Check that malfunction indicator lamp circuit.
Glow plug indicator light and injection warning light operation	Check that glow plug indicator light and injection warning light circuit.
Red stop warning light	Check that red stop warning light circuit.
Charge warning lamp operation	Section 6H2
Engine oil pressure warning lamp operation	Section 8
Engine coolant temperature meter operation	Section 8
Fuel level meter operation	Section 8
Abnormal air being inhaled from air intake system	
Exhaust system - - - - - leakage of exhaust gas, noise	
Other parts that can be checked visually	

Engine Basic Check

This check is very important for troubleshooting when ECM has detected no DTC and no abnormality has been found in visual inspection.
Follow the flow table carefully.

Step	Action	Yes	No
1	Check battery voltage. Is it 11 V or more?	Go to Step 2.	Go to “Diagnosis” in Section 6H2.
2	Is engine cranked?	Go to Step 3	Go to “Diagnosis” in Section 6G2.
3	Does engine start?	Go to Step 4.	Go to Step 5.
4	Was the trouble symptom able to be confirmed?	Go to the corresponding item(s) in “Fault Finding-Customer Complaints” in this section.	Go to Step 7 of “Engine Diagnosis Flow Table” in this section.
5	Check immobilizer system referring to “Diagnostic Flow Table” in Section 8G2. Is it in good condition?	Go to the corresponding item(s) in “Fault Finding-Customer Complaints” in this section.	Repair malfunction part.

Fault Finding – Fault Interpretation

DTC P0070 External air temperature sensor circuit malfunction

Detecting Condition

• CC0: Short circuit to earth • CO1: Open circuit or short circuit to + 12 volt

Troubleshooting

Check the connection and condition of the external air temperature sensor connector. Repair if necessary.
Check the connection and condition of the ECM C47 connector. Repair if necessary.
Measure resistance of the external air temperature sensor, if it is not approximately 2051 Ω ± 120 Ω at 25°C replace the external air temperature sensor.
Check the insulation, continuity and absence of interference resistance of the connections: • Between “LT GRN/YEL” wire of external air temperature sensor connector and C47-19 terminal of ECM connector • Between “LT GRN/RED” wire of external air temperature sensor connector and C47-29 terminal of ECM connector Repair if necessary.

After Repair

Deal with any faults detected by SUZUKI scan tool.
Clear the DTC.
Carry out a road test followed by another check with the SUZUKI scan tool.

DTC P0087 Fuel rail/system pressure too low

NOTE:

- **This DTC indicated only with SUZUKI scan tool.**
- **Fault finding procedure application conditions for stored fault:**
  The fault is declared present with the engine running.

Troubleshooting

Check the connection and condition of the fuel flow actuator connector. Repair if necessary.
Measure the resistance of the fuel flow actuator, if it is not approximately 5.3 Ω ± 0.5 Ω at 20°C, replace the fuel flow actuator.
Check the connection and condition of the ECM C47 connector. Repair if necessary.
Check the insulation, continuity and absence of interference resistance of the connection: • Between C47-7 terminal of ECM connector and “GRN/BLK” wire of fuel flow actuator Repair if necessary.
Check for fuel in the tank. Carry out Test 1: Low Pressure Circuit Check in this section. Repair if necessary.
If the fault persists, carry out “Test 7: High Pressure Pump Check” in this section.

After Repair

Deal with any faults detected by SUZUKI scan tool.
Clear the DTC.
Carry out a road test followed by another check with the SUZUKI scan tool.

DTC P0089 Fuel pressure regulator performance problem

NOTE:

- **Priority when dealing with a number of faults:**
  If DTC P0089 and either one of DTC P0180 or P0190 are present, deal with DTC P180 Fuel Temperature Sensor Circuit Malfunction or DTC P0190 Fuel Pressure Sensor Circuit Malfunction first.
- **Fault finding procedure application conditions for stored fault:**
  The fault is declared present with the engine running.

Detecting Condition

• D1: Pressure < minimum • D2: Pressure > maximum • D3: < Minimum threshold • D4: > Maximum threshold • D5: High flow current < minimum • D6: High flow current > maximum • D7: Low flow current < minimum • D8: Low flow current > maximum

Troubleshooting for D4: > Maximum threshold, D6: High flow current > maximum and D8: Low flow current > maximum

Check the connection and condition of the fuel flow actuator connector. Repair if necessary.
Measure the resistance of the fuel flow actuator, if it is not approximately 5.3 Ω ± 0.5. at 20°C, replace the fuel flow actuator.
Check the connection and condition of the ECM C47 connector. Repair if necessary.
Check the insulation, continuity and absence of interference resistance of the connection: • Between C47-7 terminal of ECM connector and “GRN/BLK” wire of fuel flow actuator Repair if necessary.
Check for fuel in the tank. Carry out Test 1: Low Pressure Circuit Check in this section.

Troubleshooting for D1: Pressure < minimum, D2: Pressure > maximum, D3: < Minimum threshold, D5: High flow current < minimum and D7: Low flow current < minimum

Check for fuel in the tank. Carry out “Test 1: Low Pressure Circuit Check” in this section. Carry out “Test 7: High Pressure Pump Check” in this section.

After Repair

Deal with any faults detected by SUZUKI scan tool.
Clear the DTC.
Carry out a road test followed by another check with the SUZUKI scan tool.

DTC P0110 Intake air temperature circuit malfunction

Detecting Condition

• CC0: Short circuit to earth • CO1: Open circuit or short circuit to + 12 volt

Troubleshooting

Check the connection and condition of the intake air temperature sensor connector. Repair if necessary.
Check the connection and condition of the ECM C47 connector. Repair if necessary.
Measure the resistance of the intake air temperature sensor, if it is not approximately 2051 Ω ± 120 Ω at 25°C replace the intake air temperature sensor.
Check for insulation, continuity and absence of interference resistance of the connections: • “LT GRN” wire of intake air temperature sensor connector and C47-20 terminal of ECM connector • “LT GRN/WHT” wire of intake air temperature sensor connector and C47-30 terminal of ECM connector Repair if necessary.

After Repair

Deal with any faults detected by SUZUKI scan tool.
Clear the DTC.
Carry out a road test followed by another check with the SUZUKI scan tool.

DTC P0115 Engine coolant temperature circuit malfunction

NOTE:

- **If DTC P0115 is detected, radiator cooling fan motor operation is present.**
- **The preheating time is 15 seconds.**

Detecting Condition

• CC0: Short circuit to earth • CO1: Open circuit or short circuit to + 12 volt

Troubleshooting

Check the connection and condition of the coolant temperature sensor connector. Repair it if necessary.
Check the connection and condition of the ECM C47 connector. Repair if necessary.
Measure the resistance between C19-1 and C19-4 terminals of the coolant temperature sensor, if it is not approximately 2252 Ω ± 112.16 Ω at 25°C, replace the coolant temperature sensor.
Check the insulation, continuity and absence of interference resistance of the connections: • Between “BLU/WHT” wire of engine coolant temperature sensor connector and C47-31 terminal of ECM connector • Between “ORN/BLK” wire of engine coolant temperature sensor connector and C47-21 terminal of ECM connector Repair if necessary.

After Repair

Deal with any faults detected by SUZUKI scan tool.
Clear the DTC.
Carry out a road test followed by another check with the SUZUKI scan tool.

DTC P0180 Fuel temperature sensor circuit malfunction

Detecting Condition

• CC0: Short circuit to earth • CO1: Open circuit or short circuit to + 12 volt

Troubleshooting

Check the connection and condition of the fuel temperature sensor connector. Repair if necessary.
Check the connection and condition of the ECM C47 connector. Repair if necessary.
Measure the resistance of the fuel temperature sensor, if it is not approximately 2.2 KΩ at 25°C, replace the fuel temperature sensor.
Check the insulation, continuity and absence of interference resistance of the connections: • Between “BLK/YEL” wire of fuel temperature sensor connector and C47-22 terminal of ECM connector • Between “PNK” wire of fuel temperature sensor connector and C47-32 terminal of ECM connector Repair if necessary.

After Repair

Deal with any faults detected by SUZUKI scan tool.
Clear the DTC.
Carry out a road test followed by another check with the SUZUKI scan tool.

DTC P0190 Fuel pressure sensor circuit malfunction

NOTE:

- **Priority when dealing with a number of faults:**
  If DTC P0190 and either one of DTC P0608, DTC P0609 or DTC P0651 are detected, deal with DTC P0608 Sensor Supply Circuit 1 Fail, DTC P0609 Sensor Supply Circuit 2 Fail or P0651 Sensor Reference Voltage Circuit/Open first.
- **Fault finding procedure application conditions for stored fault:**
  The fault is declared present after the engine started.
- **If DTC P0190 is detected, the engine stops and impossible to restart.**

Detecting Condition

• D1: Consistency • D2: Maximum threshold • D3: Minimum threshold • CC0: Short circuit to ground • CO1: Open circuit or short circuit to + 12 volt

Troubleshooting

Check the connection and condition of the connector of the fuel pressure sensor. Repair if necessary.
Check the connection and condition of ECM C47 connector. Repair if necessary.
Check for insulation, continuity and absence of interference resistance of the connections: • Between “ORN” wire of fuel pressure sensor connector and C47-15 terminal of ECM connector • Between “RED/BLK” wire of fuel pressure sensor connector and C47-25 terminal of ECM connector • Between “BLK” wire of fuel pressure sensor connector and C47-35 terminal of ECM connector Repair if necessary. If the fault persists, replace the rail.

After Repair

Deal with any faults detected by SUZUKI scan tool.
Clear the DTC.
Carry out a road test followed by another check with the SUZUKI scan tool.

DTC P0200 Injector circuit

NOTE:

- **Conditions for applying the fault finding procedure to the fault stored:**
  Fault declared present, engine at idle speed.
- **Priority when dealing with a number of faults:**
  If DTC P0200 and either one of DTC P0201, DTC P0202, DTC P0203 or DTC P0204 are detected, the fault finding procedure remains the same, but the faulty injector has to be identified.

Detecting Condition

- CC1: Short circuit to + 12 volts
- CC0: Short circuit to earth

Troubleshooting

Switch off the ignition and check the connection and condition of the injector connectors.
Repair if necessary.

Switch off the ignition, disconnect the injectors (or the injector identified by DTC P0201, DTC P0202, DTC P0203 or DTC P0204) and switch the ignition back on.
Check DTC.
If DTC P0200 is detected, carry out troubleshooting for detected DTC P0200.
If DTC P0200 is not detected, carry out troubleshooting for not detected DTC P0200.

Troubleshooting for detected DTC P0200

The injectors are not faulty.
Check the condition and connection of the ECM C47 connector.
Repair if necessary.
Check for insulation, continuity and absence of interference resistance of the connections:

- Between C47-48 terminal of ECM connector and “BLK/YEL” wire of injector No.1 connector
- Between C47-47 terminal of ECM connector and “BLU/YEL” wire of injector No.1 connector
- Between C47-42 terminal of ECM connector and “BLK/ORN” wire of injector No.2 connector
- Between C47-41 terminal of ECM connector and “BLU/ORN” wire of injector No.2 connector
- Between C47-46 terminal of ECM connector and “BLK/WHT” wire of injector No.3 connector
- Between C47-45 terminal of ECM connector and “BLU/WHT” wire of injector No.3 connector
- Between C47-44 terminal of ECM connector and “BLK/RED” wire of injector No.4 connector
- Between C47-43 terminal of ECM connector and “BLU/RED” wire of injector No.4 connector

Repair if necessary.

Troubleshooting for not detected DTC P0200

Injector(s) fault.
Replace the injector, identified by DTC P0201 to DTC P0204 if detected.
If none of the faults identifying the faulty injector circuit are detected.
- Switch off the ignition
- Reconnect one of the four injectors
- Switch the back on, if the fault reappears as detected, replace the reconnected injector.

Carry out the same procedure for the remaining injectors.

After Repair

Deal with any faults detected by SUZUKI scan tool.
Clear the DTC.
Carry out a road test followed by another check with the SUZUKI scan tool.

DTC P0201 Injector circuit malfunction – cylinder 1

NOTE:

- **Cylinder number is counted from flywheel side.**
- **Fault finding procedure application conditions for stored fault:**
  Fault declared present: engine at idle speed.
- **If DTC P0201 (CO: open circuit or CC: short circuit) is detected, malfunction indicator lamp (MIL) lights up.**

Detecting Condition

Using SUZUKI scan tool	Not using SUZUKI scan tool
• CO: Open circuit • CC: Short circuit • D1: At minimum stop	• CO: Open circuit • CC: Short circuit

Troubleshooting

Switch off the ignition and wait 15 seconds. Check the connection and condition of the injector connector. Repair if necessary.
Check the continuity between the injector two terminals using a multimeter. Replace the injector if necessary.
Check that the injector winding has not short circuit with a multimeter. Replace the injector if necessary.
Check the connection and condition of the ECM C47 connector. Repair if necessary.
Check for continuity and absence of interference resistance of the connections: • Between C47-48 terminal of ECM connector and “BLK/YEL” wire of injector No.1 connector • Between C47-47 terminal of ECM connector and “BLU/YEL” wire of injector No.1 connector Repair if necessary.
Check for insulation of the two lines: • Between C47-48 terminal and C47-47 terminal of ECM connector Repair if necessary.
Turn the ignition key to lock position, start the engine and check if the fault is stored. Replace the injector if the fault is stored.

After Repair

Deal with any faults detected by SUZUKI scan tool.
Clear the DTC.
Carry out a road test followed by another check with the SUZUKI scan tool.

DTC P0202 Injector circuit malfunction – cylinder 2

NOTE:

- **Cylinder number is counted from flywheel side.**
- **Fault finding procedure application conditions for stored fault:**
  Fault declared present: engine at idle speed.
- **If DTC P0202 (CO: open circuit or CC: short circuit) is detected, malfunction indicator lamp (MIL) lights up.**

Detecting Condition

Using SUZUKI scan tool	Not using SUZUKI scan tool
• CO: Open circuit • CC: Short circuit • D1: At minimum stop	• CO: Open circuit • CC: Short circuit

Troubleshooting

Switch off the ignition and wait 15 seconds. Check the connection and condition of the injector connector. Repair if necessary.
Check the continuity between the injector two terminals using a multimeter. Replace the injector if necessary.
Check that the injector winding has not short circuit with a multimeter. Replace the injector if necessary.
Check the connection and condition of the ECM C47 connector. Repair if necessary.
Check for continuity and absence of interference resistance of the connections: • Between C47-42 terminal of ECM connector and “BLK/ORN” wire of injector No.2 connector • Between C47-41 terminal of ECM connector and “BLU/ORN” wire of injector No.2 connector Repair if necessary.
Check for insulation of the two lines: • Between C47-42 terminal and C47-41 terminal of ECM connector Repair if necessary.
Turn the ignition key to lock position start the engine and check if the fault is stored. Replace the injector if the fault is stored.

After Repair

Deal with any faults detected by SUZUKI scan tool.
Clear the DTC.
Carry out a road test followed by another check with the SUZUKI scan tool.

DTC P0203 Injector circuit malfunction – cylinder 3

NOTE:

- **Cylinder number is counted from flywheel side.**
- **Fault finding procedure application conditions for stored fault:**
  Fault declared present: engine at idle speed.
- **If DTC P0203 (CO: open circuit or CC: short circuit) is detected, malfunction indicator lamp (MIL) lights up.**

Detecting Condition

Using SUZUKI scan tool	Not using SUZUKI scan tool
• CO: Open circuit • CC: Short circuit • D1: At minimum stop	• CO: Open circuit • CC: Short circuit

Troubleshooting

Switch off the ignition and wait 15 seconds. Check the connection and condition of the injector connector. Repair if necessary.
Check the continuity between the injector two terminals using a multimeter. Replace the injector if necessary.
Check that the injector winding has not short circuit with a multimeter. Replace the injector if necessary.
Check the connection and condition of the ECM C47 connector. Repair if necessary.
Check the continuity and absence of interference resistance of the connections: • Between C47-46 terminal of ECM connector and “BLK/WHT” wire of injector No.3 connector • Between C47-45 terminal of ECM connector and “BLU/WHT” wire of injector No.3 connector Repair if necessary.
Check for insulation of the two lines: • Between C47-46 terminal and C47-45 terminal of ECM connector Repair if necessary.
Turn the ignition key to lock position, start the engine and check if the fault is stored. Replace the injector if the fault is stored.

After Repair

Deal with any faults detected by SUZUKI scan tool.
Clear the DTC.
Carry out a road test followed by another check with the SUZUKI scan tool.

DTC P0204 Injector circuit malfunction – cylinder 4

NOTE:

- **Cylinder number is counted from flywheel side.**
- **Fault finding procedure application conditions for stored fault:**
  Fault declared present: engine at idle speed.
- **If DTC P0204 (CO: open circuit or CC: short circuit) is detected, malfunction indicator lamp (MIL) lights up.**

Detecting Condition

Using SUZUKI scan tool	Not using SUZUKI scan tool
• CO: Open circuit • CC: Short circuit • D1: At minimum stop	• CO: Open circuit • CC: Short circuit

Troubleshooting

Switch off the ignition and wait 15 seconds. Check the connection and condition of the injector connector. Repair if necessary.
Check the continuity between the injector two terminals using a multimeter. Replace the injector if necessary.
Check that the injector winding has not short circuit with a multimeter. Replace the injector if necessary.
Check the connection and condition of the ECM C47 connector. Repair if necessary.
Check for continuity and absence of interference resistance of the connections: • Between C47-44 terminal of ECM connector and “BLK/RED” wire of injector No.4 connector • Between C47-43 terminal of ECM connector and “BLU/RED” wire of injector No.4 connector Repair if necessary.
Check for insulation of the two lines: • Between C47-44 terminal and C47-43 terminal of ECM connector Repair if necessary.
Turn the ignition key to lock position, start the engine and check if the fault is stored. Replace the injector if the fault is stored.

After Repair

Deal with any faults detected by SUZUKI scan tool.
Clear the DTC.
Carry out a road test followed by another check with the SUZUKI scan tool.

DTC P0225 Pedal position sensor 1 circuit

NOTE:

- **Priority when dealing with a number of faults:**
- **If DTC P0225 and either one of DTC P0608, DTC P0609 or DTC P0651 are detected, deal with DTC P0608 Sensor Supply Circuit 1 Fail, DTC P0609 Sensor Supply Circuit 2 Fail or P0651 Sensor Reference Voltage Circuit/Open first.**
- **If DTC P0225 is detected, engine speed maintained above 1000 rpm**
- **If DTC P0225 and DTC P2120 are detected, engine speed fixed at 1300 rpm**
- **Be aware that DTC P0225 (D3: jammed component) may be detected when the brake pedal and accelerator pedal are depressed at the same time (heel and toe) during sports style driving.**

Detecting Condition

Using SUZUKI scan tool	Not using SUZUKI scan tool
• D1: Consistency • D2: No signal • D3: Jammed component • CO0: Open circuit or short circuit to ground • CC1: Open circuit or short circuit to +12 volt	• D1: Consistency • D2: No signal • CO0: Open circuit or short circuit to ground • CC1: Open circuit or short circuit to +12 volt

Troubleshooting for D1: Consistency

Disconnect the ECM E17 connector and the pedal position sensor connector. Check for insulation between E17-3 terminal and E17-21 terminal of ECM connector Repair if necessary.

Troubleshooting for CO0: Open circuit or short circuit to ground, CC1: Open circuit or short circuit to +12 volt or D2: No signal

Check the connection and condition of the pedal position sensor connector. Repair if necessary.
Check the connection and condition of the ECM E17 connector. Repair if necessary.
Measure the resistance between E97-3 terminal and E97-5 terminal of pedal position sensor. If it is not approximately 0.67 – 1.69 KΩ, replace the pedal position sensor.
Check for insulation, continuity and absence of interference resistance of the connections: • Between “BRN/WHT” wire of pedal position sensor connector and E17-4 terminal of ECM connector • Between “WHT/RED” wire of pedal position sensor connector and E17-3 terminal of ECM connector • Between “RED” wire of pedal position sensor connector and E17-5 terminal of ECM connector Repair if necessary.
Disconnect the ECM E17 connector and the pedal position sensor connector. Check for insulation between E17-3 terminal and E17-21 terminal of ECM connector Repair if necessary. If the fault persists, replace the pedal position sensor.

Troubleshooting for D3: Jammed component

Check that the accelerator pedal is not jammed with data list parameter (accelerator pedal position) by using scan tool. Replace the pedal position sensor if necessary.
Check that the brake pedal is not jammed with data list parameter (brake pedal) by using scan tool. Replace the brake light switch if necessary.
Warn the customer that “heel and toe” sports driving (brake and accelerator pedal depressed) can bring out a fault and activate instrument panel warning lights.

After Repair

Deal with any faults detected by SUZUKI scan tool.
Clear the DTC.
Carry out a road test followed by another check with the SUZUKI scan tool.

DTC P0231 Fuel pump secondary circuit low

NOTE:

If DTC P0231 is detected, the fuel flow actuator is fully opened (leading to engine rattling) and the engine is stopped to prevent it from racing.

Detecting Condition

• CO0: Open circuit or short circuit to ground • CO1: Short circuit to + 12 volt

Troubleshooting

Check the condition and connection of the flow actuator connector. Repair if necessary.
Check the connection and condition of the ECM C47 connector. Repair if necessary.
Measure the resistance between terminals of the flow actuator, if it is not approximately 5.3 Ω ± 0.5 at 20°C, replace the actuator.
Check for insulation, continuity and absence of interference resistance of the connection: • Between C47-7 terminal of ECM connector and “GRN/BLK” wire of flow actuator connector Repair if necessary.

After Repair

Deal with any faults detected by SUZUKI scan tool.
Clear the DTC.
Carry out a road test followed by another check with the SUZUKI scan tool.

DTC P0235 Turbo pressure sensor circuit malfunction

NOTE:

- **If DTC P0235 and either one of DTC P0608, DTC P0609 or DTC P0651 are detected, deal with DTC P0608 Sensor Supply Circuit 1 Fail, DTC P0609 Sensor Supply Circuit 2 Fail or P0651 Sensor Reference Voltage Circuit/Open first.**
- **If DTC P0235 (D5: consistency) is detected, injection warning light (gravity 1 fault) lights up.**

Detecting Condition

• D1: < Minimum threshold • D2: > Maximum threshold • D3: Permanent low signal • D4: Permanent high signal • D5: Consistency • D6: At minimum stop • D7: At maximum stop

Troubleshooting for D1: <Minimum threshold, D2:> Maximum threshold, D3: Permanent low signal and D4: Permanent high signal

Check the connection and condition of the turbo pressure sensor connector. Repair if necessary.
Check the connection and condition of the ECM C47 connector. Repair if necessary.
Check for insulation, continuity and absence of interference resistance of the connections: • Between “LT GRN/RED” wire of turbo pressure sensor connector and C47-36 terminal of ECM connector • Between “GRY/RED” wire of turbo pressure sensor connector and C47-26 terminal of ECM connector • Between “ORN” wire of turbo pressure sensor connector and C47-16 terminal of ECM connector Repair if necessary.

Troubleshooting for D5: Consistency

Visually check that the turbocharger circuit sealing. Repair if necessary.
Remove the air supply ducts and check that they are not blocked. Repair if necessary.
With engine stationary, check the consistency between the atmospheric pressure and inlet manifold vacuum. With the engine stopped, the pressure should be approximately the same between the two sensors. Replace the turbo pressure sensor if necessary.

Troubleshooting for D6: At minimum stop and D7: At maximum stop

Visually check that the turbocharger circuit sealing. Repair if necessary.
Remove the air supply ducts and check that they are not blocked. Repair if necessary.
Check the condition of the turbo pressure sensor connector and replace it if necessary.
With engine stationary, check the consistency between the atmospheric pressure and inlet manifold vacuum. With the engine stopped, the pressure should be approximately the same between the two sensors. Replace the turbo pressure sensor if necessary.
Check the turbocharger (wastegate pneumatic actuation circuit). Repair if necessary.

After Repair

Deal with any faults detected by SUZUKI scan tool.
Clear the DTC.
Carry out a road test followed by another check with the SUZUKI scan tool.

DTC P0301 Cylinder 1 misfire detected

NOTE:

- **Cylinder number is counted from flywheel side.**
- **Fault finding procedure application conditions for stored fault:**
  Fault declared present, engine at idle speed.
- **Priority when dealing with a number of faults:**
  - **If DTC P0201 (CO: open circuit or CC: short circuit) and DTC P0301 are detected, deal first with fault DTC P0201 Injector Circuit Malfunction – Cylinder 1.**
  - **If DTC P0089 (D1: pressure < minimum, D2: pressure > maximum or D7: low flow current < minimum) and DTC P0301 are detected, deal with fault DTC P0089 Fuel Pressure Regulator Performance Problem first.**

Troubleshooting

Check the engine compression. Repair if necessary
Check the valve clearances and adjust them if necessary.
Check the air inlet conduits and the EGR valve and clean them if necessary.
Replace the injector.

After Repair

Deal with any faults detected by SUZUKI scan tool.
Clear the DTC.
Carry out a road test followed by another check with the SUZUKI scan tool.

DTC P0302 Cylinder 2 misfire detected

NOTE:

- **Cylinder number is counted from flywheel side.**
- **Fault finding procedure application conditions for stored fault:**
  Fault declared present, engine at idle speed.
- **Priority when dealing with a number of faults:**
  - **If DTC P0202 (CO: open circuit or CC: short circuit) and DTC P0302 are detected, deal first with fault DTC P0202 Injector Circuit Malfunction – Cylinder 2.**
  - **If DTC P0089 (D1: pressure < minimum, D2: pressure > maximum or D7: low flow current < minimum) and DTC P0302 are detected, deal with fault DTC P0089 Fuel Pressure Regulator Performance Problem first.**

Troubleshooting

Check the engine compression. Repair if necessary
Check the valve clearances and adjust them if necessary.
Check the air inlet conduits and the EGR valve and clean them if necessary.
Replace the injector.

After Repair

Deal with any faults detected by SUZUKI scan tool.
Clear the DTC.
Carry out a road test followed by another check with the SUZUKI scan tool.

DTC P0303 Cylinder 3 misfire detected

NOTE:

- **Cylinder number is counted from flywheel side.**
- **Fault finding procedure application conditions for stored fault:**
  Fault declared present, engine at idle speed.
- **Priority when dealing with a number of faults:**
  - **If DTC P0203 (CO: open circuit or CC: short circuit) and DTC P0303 are detected, deal first with fault DTC P0203 Injector Circuit Malfunction – Cylinder 3.**
  - **If DTC P0089 (D1: pressure < minimum, D2: pressure > maximum or D7: low flow current < minimum) and DTC P0303 are detected, deal with fault DTC P0089 Fuel Pressure Regulator Performance Problem first.**

Troubleshooting

Check the engine compression. Repair if necessary
Check the valve clearances and adjust them if necessary.
Check the air inlet conduits and the EGR valve and clean them if necessary.
Replace the injector.

After Repair

Deal with any faults detected by SUZUKI scan tool.
Clear the DTC.
Carry out a road test followed by another check with the SUZUKI scan tool.

DTC P0304 Cylinder 4 misfire detected

NOTE:

- **Cylinder number is counted from flywheel side.**
- **Fault finding procedure application conditions for stored fault:**
  Fault declared present, engine at idle speed.
- **Priority when dealing with a number of faults:**
  - **If DTC P0204 (CO: open circuit or CC: short circuit) and DTC P0304 are detected, deal first with fault DTC P0204 Injector Circuit Malfunction – Cylinder 4.**
  - **If DTC P0089 (D1: pressure < minimum, D2: pressure > maximum or D7: low flow current < minimum) and DTC P0304 are detected, deal with fault DTC P0089 Fuel Pressure Regulator Performance Problem first.**

Troubleshooting

Check the engine compression. Repair if necessary
Check the valve clearances and adjust them if necessary.
Check the air inlet conduits and the EGR valve and clean them if necessary.
Replace the injector.

After Repair

Deal with any faults detected by SUZUKI scan tool.
Clear the DTC.
Carry out a road test followed by another check with the SUZUKI scan tool.

DTC P0325 Knock sensor circuit malfunction

NOTE:

- **This DTC indicated only with SUZUKI scan tool.**
- **Fault finding procedure application conditions for stored fault:**
  The fault is declared present with the engine idling.
- **Priority when dealing with a number of faults:**
  If there is a combination of faults DTC P0325, P0115, P0180 and P2226 are detected, deal with faults P0115 Engine Coolant Temperature Circuit Malfunction, P0180 Fuel Temperature Sensor Circuit Malfunction, and P2226 Barometric Pressure Circuit first.
  A fault on there sensors could lead to incorrect fault finding of the knock sensor.

Troubleshooting

Check the connection and condition of the knock sensor connector. Repair if necessary.
Check the connection and condition of the ECM C47 connector and the sensor shielding on C47-9. Repair if necessary.
Check for insulation, continuity and absence of interference resistance of the connections: • Between “BLK” wire of knock sensor connector and C47-13 terminal of ECM connector • Between “WHT” wire of knock sensor connector and C47-12 terminal of ECM connector Repair if necessary.
Check that the fuel injector calibration codes are correctly entered on the ECM. Check that the knock sensor is secure on the engine. After retightening the knock sensor. Clear DTC. Carry out a road test followed by another check with the SUZUKI scan tool. If the fault persists, replace the knock sensor.

After Repair

Deal with any faults detected by SUZUKI scan tool.
Clear the DTC.
Carry out a road test followed by another check with the SUZUKI scan tool.

DTC P0335 Crankshaft position sensor circuit malfunction

NOTE:

- **This DTC indicated only with SUZUKI scan tool.**
- **If DTC P0335 (D1: consistency, D2: no tooth signal, D3: too many additional teeth or D6: too many teeth missing) is detected, the engine will stop and injection warning light (gravity 1 fault) and red stop warning light (gravity 2 fault) will light up.**
- **If DTC P0335 (D4: teeth missing or D5: additional teeth) 75 % engine performance, the warning light will not light up.**

Detecting Condition

• D1:Consistency • D2: No tooth signal • D3: Too many additional teeth • D4: Teeth missing • D5: Additional teeth • D6: Too many teeth missing

Troubleshooting

Check the connection and condition of the crankshaft position sensor connector and repair if necessary. Ensure the sensor is correctly fitted on the engine.
Check the connection and condition of the ECM C47 connector. Repair if necessary.
Measure the resistance of the crankshaft position sensor, if it is not approximately 760 Ω replace the crankshaft position sensor.
Check the insulation, continuity and absence of interference resistance of the connections: • Between “BLU” wire of crankshaft position sensor connector and C47-23 terminal of ECM connector • Between “PNK” wire of crankshaft position sensor connector and C47-33 terminal of ECM connector Repair if necessary.
Check that the flywheel ring gear is not faulty (missing teeth).

After Repair

Deal with any faults detected by SUZUKI scan tool.
Clear the DTC.
Carry out a road test followed by another check with the SUZUKI scan tool.

DTC P0340 Camshaft position sensor circuit malfunction

NOTE:

Fault finding procedure application conditions for stored fault:
The fault is declared present when the engine under the started or idling.

Detecting Condition

• D1: Consistency • D2: No signal

Troubleshooting

Check the connection and condition of the camshaft position sensor connector. Repair if necessary.
Check the connection and condition of the ECM C47 connector. Repair if necessary.
Check for the + 12 V after ignition feed on “BLK/RED” wire of camshaft position sensor connector. Repair if necessary.
Check the insulation, continuity and absence of interference resistance of the connections: • Between “YEL” wire of camshaft position sensor connector and C47-24 terminal of ECM connector • Between “GRN” wire of camshaft position sensor connector and C47-34 terminal of ECM connector If necessary, replace the sensor.
Check the timing gear setting referring to “Timing Belt Removal and Installation” in Section 6A2.

After Repair

Deal with any faults detected by SUZUKI scan tool.
Clear the DTC.
Carry out a road test followed by another check with the SUZUKI scan tool.

DTC P0380 Glow plug/heater circuit malfunction
DTC P0670 Glow plug module control circuit

NOTE:

- **DTC P0380 indicated only with SUZUKI scan tool.**
- **DTC P0670 indicated only with generic scan tool.**

Detecting Condition
• CO: Open circuit

Troubleshooting

Check the condition and connection of the pre-heating unit connector. Repair if necessary.
Check the condition and connection of the glow plug connectors. Repair if necessary.
Check the condition and connection of the ECM C48 connector. Repair if necessary.
Measure the resistance of each glow plug. The resistance must be less than 2 Ω. If not, replace the faulty plug(s).
Check for insulation, continuity and absence of interference resistance of the connection: • C48-18 terminal of ECM connector and “BLU” wire of pre-heating unit connector Repair if necessary.

After Repair

Deal with any faults detected by SUZUKI scan tool.
Clear the DTC.
Carry out a road test followed by another check with the SUZUKI scan tool.

DTC P0382 Glow plug/heater circuit B malfunction

NOTE:

If DTC P0382 is detected, starting difficult (or impossible when cold).

Detecting Condition

• CO0: Open circuit or short circuit to ground • CC1: Short circuit to +12 volt

Troubleshooting

Check the condition and connection of the pre-heating unit connector. Repair it if necessary.
Check the condition and condition of the ECM C48 connector. Repair if necessary.
Check for insulation, continuity and absence of interference resistance of the connections: • “BLK/RED” wire of pre-heating unit for power supply circuit • Between “BRN/WHT” wire of pre-heating unit connector and C48-10 terminal of ECM connector • Between “BLU” wire of pre-heating unit connector and C48-18 terminal of ECM connector Repair if necessary. If the connections are correctly, check the pre-heating unit working properly.

After Repair

Deal with any faults detected by SUZUKI scan tool.
Clear the DTC.
Carry out a road test followed by another check with the SUZUKI scan tool.

DTC P0400 Exhaust gas recirculation flow malfunction
DTC P2413 Exhaust gas recirculation system performance

NOTE:

- **DTC P2413 indicated only with generic scan tool.**
- **Fault finding procedure application conditions for stored fault:**
  The fault is declared present with the engine idling.
- **If DTC P0400 or DTC P2413 is detected, engine instability may even lead to stalling.**
  Starting difficult or even impossible when cold.
- **If DTC P0400 or DTC P2413 (D5: component stuck) is detected, malfunction indicator lamp (MIL) lights up.**

Detecting Condition

Using SUZUKI scan tool	Not using SUZUKI scan tool
DTC P0400 • D1: Parameter at limit minimum • D2: Parameter at limit maximum • D3: Inconsistency • D4: Above maximum threshold • D5: Component stuck	DTC P0400 • D1: Parameter at limit minimum • D2: Parameter at limit maximum • D3: Inconsistency • D4: Above maximum threshold DTC P2413 • D5: Component stuck

Troubleshooting

Check the connection and condition of the EGR valve connector. Repair if necessary.
Check the condition of the ECM C47 connector. Repair if necessary.
Measure the resistance at the EGR valve terminal • Approximately 4 KΩ ± 1.6 KΩ at 20°C between C46-1 terminal and C46-2 terminal of EGR valve • Approximately 1 KΩ ± 0.5 KΩ at 20°C between C46-2 terminal and C46-3 terminal of EGR valve If it is not, replace the EGR valve.
Check for the 12 V after ignition feed on “BLK/RED” wire of EGR valve connector.
Check for insulation, continuity and absence of interference resistance of the connections: • EGR valve “BLK/RED” wire for power supply circuit • Between C47-6 terminal of ECM connector and “GRY” wire of EGR valve connector Repair if necessary.
If D3: Inconsistency, D4: Above maximum threshold or D5: Component stuck: Remove the EGR valve. Check that there are no foreign bodies (scale…) that could jam the valve. Remove any foreign bodies and clean the EGR valve. Refit the EGR valve. Clear DTC. Carry out a road test followed by another check with the SUZUKI scan tool.

After Repair

Deal with any faults detected by SUZUKI scan tool.
Clear the DTC.
Carry out a road test followed by another check with the SUZUKI scan tool.

DTC P0402 Exhaust gas recirculation flow excessive detected
DTC P0403 Exhaust gas recirculation control circuit

NOTE:

- **DTC P0402 indicated only with generic scan tool.**
- **Fault finding procedure application conditions for stored fault:**
  The fault is declared present with the engine idling.
- **If DTC P0402 or DTC P0403 (CO0: open circuit or short circuit to ground) is detected, malfunction indicator lamp (MIL) lights up.**

Detecting Condition

Using SUZUKI scan tool	Not using SUZUKI scan tool
DTC P0403 • CO0: Open circuit or short circuit to ground • CC1: Short circuit to + 12 volt	DTC P0402 • CO0: Open circuit or short circuit to ground DTC P0403 • CC1: Short circuit to + 12 volt

Troubleshooting

Check the connection and condition of the EGR valve connector. Repair if necessary.
Check the connection and condition of the ECM C47 connector. Repair if necessary.
Measure the resistance between C46-4 and C46-6 terminals of the EGR valve, if it is not approximately 8 Ω ± 0.5 Ω at 25°C replace the EGR valve.
Check for insulation between C46-4 terminal of EGR valve and EGR valve body. If the insulation is not correct, replace EGR valve.
Check for insulation, continuity and absence of interference resistance of the connections: • EGR valve connector C46-4 for power supply circuit • Between “GRY” wire of EGR valve connector and C47-6 terminal of ECM connector Repair if necessary.

After Repair

Deal with any faults detected by SUZUKI scan tool.
Clear the DTC.
Carry out a road test followed by another check with the SUZUKI scan tool.

DTC P0409 Exhaust gas recirculation sensor circuit
DTC P0487 Exhaust gas recirculation throttle position control circuit

NOTE:

- **DTC P0487 indicated only with generic scan tool.**
- **Priority when dealing with a number of faults:**
  If DTC P0409 or DTC P0487 and either one of DTC P0608, DTC P0609 or DTC P0651 are detected, deal with DTC P0608 Sensor Supply Circuit 1 Fail, DTC P0609 Sensor Supply Circuit 2 Fail or P0651 Sensor Reference Voltage Circuit/Open first.
- **Fault finding procedure application conditions for stored fault:**
  The fault is declared present after the engine is started.
- **If DTC P0409 or DTC P0487 (CC0: open circuit or short circuit to ground or CC1: open circuit or short circuit to + 12 volts) is detected, malfunction indicator lamp (MIL) lights up.**

Detecting Condition

Using SUZUKI scan tool	Not using SUZUKI scan tool
DTC P0409 • D1: < Minimum threshold • D2: > Maximum threshold • CC0: Open circuit or short circuit to ground • CC1: Open circuit or short circuit to + 12 volt	DTC P0409 • D1: < Minimum threshold • D2: > Maximum threshold DTC P0487 • CC0: Open circuit or short circuit to ground • CC1: Open circuit or short circuit to + 12 volt

Troubleshooting

Check the condition and condition of the EGR valve connector. Repair if necessary.
Check the condition of the ECM C47 connector. Repair if necessary.
Measure the resistance at the EGR valve terminal • Approximately 4 KΩ ± 1.6 KΩ at 20°C between C46-1 terminal and C46-2 terminal of EGR valve • Approximately 1 KΩ ± 0.5 KΩ at 20°C between C46-2 terminal and C46-3 terminal of EGR valve If it is not, replace the EGR valve.
Check for insulation, continuity and absence of interference resistance of the connections: • Between “RED/WHT” wire of EGR valve connector and C47-17 terminal of ECM connector • Between “RED/YEL” wire of EGR valve connector and C47-27 terminal of ECM connector • Between “GRN/RED” wire of EGR valve connector and C47-37 terminal of ECM connector Repair if necessary.

After Repair

Deal with any faults detected by SUZUKI scan tool.
Clear the DTC.
Carry out a road test followed by another check with the SUZUKI scan tool.

DTC P0480 Radiator cooling fan low speed control system malfunction

NOTE:

This DTC indicated only with SUZUKI scan tool.

Detecting Condition

• CO0: Open circuit or short circuit to ground • CC1: Short circuit to + 12 volt

Troubleshooting

Check the condition and connection of the radiator fan relay No.2. Repair if necessary.
Check the condition and connection of the ECM C48 connector. Repair if necessary.
Check for insulation, continuity and absence of interference resistance of the connections: • Between C48-20 terminal of ECM connector and “BLK/BLU” wire of radiator fan relay No.2 socket With the ignition on, check for the presence of 12 volts supply on “BLK/RED” wire and “GRN” wire of radiator fan relay No.2 socket. Repair if necessary.

After Repair

Deal with any faults detected by SUZUKI scan tool.
Clear the DTC.
Carry out a road test followed by another check with the SUZUKI scan tool.

DTC P0481 Radiator cooling fan high speed control system malfunction

NOTE:

This DTC indicated only with SUZUKI scan tool.

Detecting Condition

• CO0: Open circuit or short circuit to ground • CC1: Short circuit to + 12 volt

Troubleshooting

Check the condition and connection of the radiator fan relay No.1 and No.3. Repair if necessary.
Check the condition and connection of the ECM C48 connector. Repair if necessary.
Check for insulation, continuity and absence of interference resistance of the connections: • Between C48-14 terminal of ECM connector and “BLK/YEL” wire of radiator fan relay No.1 socket • Between C48-14 terminal of ECM connector and “BLK/YEL” wire of radiator fan relay No.3 socket With the ignition on, check for the presence of 12 volts supply on “GRN/BLK” wires of radiator fan relay No.1 and No.3 sockets. Repair if necessary.

After Repair

Deal with any faults detected by SUZUKI scan tool.
Clear the DTC.
Carry out a road test followed by another check with the SUZUKI scan tool.

DTC P0500 Vehicle speed sensor circuit malfunction

NOTE:

This DTC indicated only with SUZUKI scan tool.

Detecting Condition

• D1: Consistency • D2: No signal

Troubleshooting

Check the condition and connection of the vehicle speed sensor connector. Repair if necessary.
Check the connection and condition of the ECM C48 connector. Repair if necessary.
Check the continuity and absence of interference resistance of the connections: • Vehicle speed sensor “BLK/ORN” wire for power supply circuit • Vehicle speed sensor “BLU/BLK” wire for ground circuit Repair if necessary.
Check for insulation form the +12 volt feed on the connection: • Between “YEL/GRN” wire of vehicle speed sensor connector and C48-23 terminal of ECM connector Repair if necessary.

After Repair

Deal with any faults detected by SUZUKI scan tool.
Clear the DTC.
Carry out a road test followed by another check with the SUZUKI scan tool.

DTC P0513 Incorrect immobilizer key

NOTE:

This DTC indicated only with SUZUKI scan tool.

Troubleshooting

Check the connection and condition of the ECM E17 connector. Repair if necessary.
Check the connection and condition of the immobilizer control module connector. Repair if necessary.
Check for insulation, continuity and absence of interference resistance of the connections: • Between E17-15 terminal of ECM connector and G46-15 terminal of immobilizer control module connector Repair if necessary.

After Repair

Deal with any faults detected by SUZUKI scan tool.
Clear the DTC.
Carry out a road test followed by another check with the SUZUKI scan tool.

DTC P0530 A/C refrigerant pressure sensor circuit malfunction

NOTE:

- **This DTC indicated only with SUZUKI scan tool.**
- **Fault finding procedure application conditions for stored fault:**
  The fault is declared present with the engine idling and air conditioning operating one vehicle equipped with air conditioning system.
- **Priority when dealing with a number of faults:**
  If DTC P0530 and either one of DTC P0608 or DTC P0609 are detected, deal with DTC P0608 Sensor Supply Circuit 1 Fail, DTC P0609 Sensor Supply Circuit 2 Fail first.

Detecting Condition

• CO1: Open circuit or short circuit to + 12 volt • CC0: Short circuit to ground

Troubleshooting

Check the connection and condition of the A/C pressure sensor. Repair if necessary.
Check the connection and condition of the ECM C48 connector. Repair if necessary.
Check for insulation, continuity and absence of interference resistance of the connections: • Between “GRN/RED” wire of A/C pressure sensor connector and C48-3 terminal of ECM connector • Between “LT GRN/RED” wire of A/C pressure sensor connector and C48-9 terminal of ECM connector • Between “BRN/WHT” wire of A/C pressure sensor connector and C48-27 terminal of ECM connector Repair if necessary.

After Repair

Deal with any faults detected by SUZUKI scan tool.
Clear the DTC.
Carry out a road test followed by another check with the SUZUKI scan tool.

DTC P0560 System voltage

NOTE:

- **This DTC indicated only with SUZUKI scan tool.**
- **Fault finding procedure application conditions for stored fault:**
  The fault is declared present with the engine running at over 1000 rpm.

Detecting Condition

• D1: < Minimum threshold • D2: > Maximum threshold

Troubleshooting

Measure the battery voltage when the ignition is switched on. If the battery voltage is less than 10V recharge the battery.
Check the connection and condition of the battery terminals. Repair if necessary.
Check the vehicle's charge circuit. Repair if necessary.
Check the connection and condition of the ECM E17 connector. Repair if necessary.
Check the insulation, continuity and absence of interference resistance of the connections: • ECM E17-11 terminal for power supply circuit • Between C48-31 terminal of ECM connector and vehicle body ground • Between C48-32 terminal of ECM connector and vehicle body ground Repair if necessary.

After Repair

Deal with any faults detected by SUZUKI scan tool.
Clear the DTC.
Carry out a road test followed by another check with the SUZUKI scan tool.

DTC P0604 Control module internal fail

NOTE:

- **This DTC indicated only with SUZUKI scan tool.**
- **Fault finding procedure application conditions for stored fault:**
  The fault is declared present with the engine idling.
- **If DTC P0604 is detected, engine stopped and restarting is impossible.**

Detecting Condition

• D1: RAM memory integrity

Troubleshooting

Replace the ECM.

After Repair

Deal with any faults detected by SUZUKI scan tool.
Clear the DTC.
Carry out a road test followed by another check with the SUZUKI scan tool.

DTC P0605 Control module program error
DTC P0606 Control module program error

NOTE:

- **DTC P0605 indicated only with generic scan tool.**
- **DTC P0606 indicated only with SUZUKI scan tool.**
- **If DTC P0606 or P0605 (D3: read EEPROM memory) is detected, malfunction indicator lamp (MIL) lights up.**
- **If DTC P0605 or DTC P0606 is detected, engine shuts off and injection warning light (gravity 1 fault) and red stop warning light (gravity 2 fault) lights up or engine runs noisily at 1300 rpm and injection warning light (gravity 1 fault) light up.**

Detecting Condition

Using SUZUKI scan tool	Not using SUZUKI scan tool
DTC P0606 • D1: Analogue converter • D2: Write to EEPROM memory • D3: Read EEPROM memory • D4: Injection calibration data • D5: Memory auto-test • D6: Watchdog not refreshed • D7: Interference on the injector control line • D8: Watchdog activation	DTC P0605 • D3: Read EEPROM memory

Troubleshooting for D7: Interference on the injector control line

Check the connection and condition of the ECM C47 connector. Repair it if necessary.
Check the insulation, continuity and absence of interference resistance of the connections: • Between C47-48 terminal of ECM connector and “BLK/YEL” wire of injector No.1 connector • Between C47-47 terminal of ECM connector and “BLU/YEL” wire of injector No.1 connector • Between C47-42 terminal of ECM connector and “BLK/ORN” wire of injector No.2 connector • Between C47-41 terminal of ECM connector and “BLU/ORN” wire of injector No.2 connector • Between C47-46 terminal of ECM connector and “BLK/WHT” wire of injector No.3 connector • Between C47-45 terminal of ECM connector and “BLU/WHT” wire of injector No.3 connector • Between C47-44 terminal of ECM connector and “BLK/RED” wire of injector No.4 connector • Between C47-43 terminal of ECM connector and “BLU/RED” wire of injector No.4 connector Repair if necessary.

Troubleshooting for D4: Injector calibration data

Check that the registered injector calibration code matches the injectors. If not write the injector calibration code (refer to “ECM Registration” in Section 6E2). If injector calibration code corresponds correctly to the injectors, replace the ECM.

Troubleshooting for D1: Analogue converter, D5: Memory auto-test, D6: Watchdog not refreshed and D8: Watchdog activation

Replace the ECM

Troubleshooting for D2: Write to EEPROM memory and D3: Read EEPROM memory

Deal with any faults detected by SUZUKI scan tool Clear the DTC referring to “Diagnostic Trouble Code (DTC) Clearance” in this section. Switch off the ignition and wait 30 seconds. Switch the ignition back on, carry out another check with the SUZUKI scan tool, and if the incident persists clear the DTC again. If the fault persists, replace the ECM.

After Repair

Deal with any faults detected by SUZUKI scan tool.
Clear the DTC.
Carry out a road test followed by another check with the SUZUKI scan tool.

DTC P0608 Sensor supply circuit 1 fail

NOTE:

- **This DTC indicated only with SUZUKI scan tool.**
- **Priority when dealing with a number of faults:**
  If DTC P0608 and either one of DTC P0190, DTC P0225, DTC P0235, DTC P0409 or DTC P0530 are detected, deal with DTC P0608 Sensor Supply Circuit 1 Fail first.
- **If DTC P0608 is detected, engine stopped and starting impossible.**

Detecting Condition

• CC0: Short circuit to ground • CO1: Open circuit or short circuit to + 12 volt

Troubleshooting

Check the condition and connection of all the sensor connectors as follows: • A/C pressure sensor • Turbo pressure sensor • Fuel pressure sensor • Pedal position sensor • EGR valve Repair if necessary.
Check the condition and connection of ECM connectors E17, C47 and C48. Repair if necessary.
To locate any internal fault in one of the sensors with a 5 V supply (short circuit), disconnect earth of the sensors on the list above. Clear DTC and recheck DTC. If the faulty sensor is located, check its connections and that it is in order. If necessary replace the sensor.
Check the insulation, continuity and absence of interference resistance of the connections: • Between C48-3 terminal of ECM connector and “GRN/RED” wire of A/C pressure sensor • Between C47-16 terminal of ECM connector and “ORN” wire of turbo pressure sensor • Between C47-15 terminal of ECM connector and “ORN” wire of fuel pressure sensor • Between E17-4 terminal of ECM connector and “BRN/WHT” wire of pedal position sensor • Between C47-17 terminal of ECM connector and “RED/WHT” wire of EGR valve Repair if necessary.
If the fault persists, apply the fault finding procedure for each sensor with a 5 V supply.

After Repair

Deal with any faults detected by SUZUKI scan tool.
Clear the DTC.
Carry out a road test followed by another check with the SUZUKI scan tool.

DTC P0609 Sensor supply circuit 2 fail
DTC P0651 Sensor reference voltage circuit/open

NOTE:

- **DTC P0609 indicated only with SUZUKI scan tool.**
- **DTC P0651 indicated only with generic scan tool.**
- **If DTC P0609 or DTC P0651 is detected, engine speed maintained at 1000 rpm and engine performance reduced to 75%.**

Detecting Condition

• CC0: Short circuit to ground • CO1: Open circuit or short circuit to + 12 volt

Troubleshooting for CC0: short circuit to ground

Check the connection and condition of the pedal position sensor connector. Repair if necessary.
Check the condition of the ECM E17connector. Repair if necessary.
For “RED/WHT” wire of pedal position sensor connector check for the + 5 V after ignition feed on “RED” wire of pedal position sensor connector. Repair if necessary.
Check for insulation from ground on the following connection: • Between “RED” wire of pedal position sensor connector and E17-15 terminal of ECM connector Repair if necessary.

Troubleshooting for CO1: open circuit or short circuit to + 12 volt

Check the connection and condition of the pedal position sensor connector. Repair if necessary.
Check the condition of the ECM E17connector. Repair if necessary.
For “RED/WHT” wire of pedal position sensor connector check for the + 5 V after ignition feed on “RED” wire of pedal position sensor connector. Repair if necessary.
Disconnect the ECM E17 connector and the pedal position sensor connector. Check for insulation on E17-15 terminal and E17-21 terminal of ECM connector Repair if necessary.
Check the continuity of the connections: • “RED/WHT” wire of pedal position sensor connector and E17-15 terminal of ECM connector • “PNK/BLK” wire of pedal position sensor connector and E17-27 terminal of ECM connector Repair if necessary.

After repair

Deal with any faults detected by SUZUKI scan tool.
Clear the DTC.
Carry out a road test followed by another check with the SUZUKI scan tool.

DTC P0645 A/C compressor relay control circuit malfunction

NOTE:

This DTC indicated only with SUZUKI scan tool.

Detecting Condition

• CO0: Open circuit or short circuit to ground • CC1: Short circuit to + 12 volt

Troubleshooting

Check the connection and condition of the A/C compressor relay. Repair if necessary.
Check the connection and condition of the ECM E17 connector. Repair if necessary.
Check for insulation, continuity and absence of interference resistance of the connections: • Between C55-1 wire of A/C compressor relay socket and E17-16 terminal of ECM connector Repair if necessary.

After Repair

Deal with any faults detected by SUZUKI scan tool.
Clear the DTC.
Carry out a road test followed by another check with the SUZUKI scan tool.

DTC P0685 Main relay control circuit malfunction

Detecting Condition

Using SUZUKI scan tool	Not using SUZUKI scan tool
• D1: Relay cut-off too soon • D2: Relay cut-off too late	• D1: Relay cut-off too soon

Troubleshooting

Check the main relay supply fuse in the engine compartment: (fuse F1). Replace the fuse if necessary.
Check the connection and condition and connection of the main relay socket. Repair if necessary.
Check the condition and connection of the ECM C48 connector. Repair if necessary.
Check for insulation, continuity and absence of interference resistance of the connections: • Between F1 fuse output and “BLK/YEL” wire of main relay socket terminal • Between “BLU/BLK” wire of main relay socket and C48-24 terminal of ECM connector • Between “BLK/RED” wire of main relay socket and C48-30 terminal of ECM connector • Between “BLK/RED” wire of main relay socket and C48-29 terminal of ECM connector • Between C48-31 terminal of ECM connector and vehicle body ground Repair if necessary. If the fault persists, replace the main relay.

After Repair

Deal with any faults detected by SUZUKI scan tool.
Clear the DTC.
Carry out a road test followed by another check with the SUZUKI scan tool.

DTC P103D A/C signal circuit malfunction

NOTE:

- **This DTC indicated only with SUZUKI scan tool.**
- **Fault finding procedure application conditions for stored fault:**
  The fault is declared present with the engine idling, and air conditioning either activated or off.

Detecting Condition

• D1: Consistency • D2: Permanent low level • D3: Permanent high level

Troubleshooting

Check the connection and condition of the ECM C48 connector. Repair if necessary.
Check the connection and condition of the A/C relay. Repair if necessary.
Check for insulation, continuity and absence of interference resistance of the connections: • Between C52-4 wire of A/C relay socket and C48-11 terminal of ECM connector Repair if necessary.
If the incident persists, consult the air conditioning fault finding procedure.

After Repair

Deal with any faults detected by SUZUKI scan tool.
Clear the DTC.
Carry out a road test followed by another check with the SUZUKI scan tool.

DTC P1641 Additional heater relay circuit 1

NOTE:

This DTC indicated only with SUZUKI scan tool.

Detecting Condition

• CO0: Open circuit or short circuit to ground • CC1: Short circuit to + 12 volt

Troubleshooting

Check the condition and connection of the additional heater relay No.1 socket. Repair if necessary.
Check the condition of the ECM C48 connector. Repair if necessary.
Check the insulation, continuity and absence of interference resistance of the connections: • Between C48-15 terminal of ECM connector and “YEL/BLK” wire of additional heater relay No.1 socket With the ignition on, check for the 12 V supply on “BLK/RED” wire and “BLK/BLU” wire of additional heater relay No.1 socket. Repair if necessary. If the fault persists, replace the relay.

After Repair

Deal with any faults detected by SUZUKI scan tool.
Clear the DTC.
Carry out a road test followed by another check with the SUZUKI scan tool.

DTC P1643 Additional heater relay circuit 2

NOTE:

This DTC indicated only with SUZUKI scan tool.

Detecting Condition

• CO0: Open circuit or short circuit to ground • CC1: Short circuit to + 12 volt

Troubleshooting

Check the condition and connection of the additional heater relay No.2 and No.3 socket. Repair if necessary.
Check the condition of the ECM C48 connector. Repair if necessary.
Check the insulation, continuity and absence of interference resistance of the connections: • Between C48-16 terminal of ECM connector and “YEL/RED” wire of additional heater relay No.2 socket • Between C48-16 terminal of ECM connector and “YEL/RED” wire of additional heater relay No.3 socket With the ignition on, check for the 12 volts supply the following terminals: • Between “BLK/RED” wire of additional heater relay No.2 socket and vehicle body ground • Between “RED/WHT” wire of additional heater relay No.2 socket and vehicle body ground • Between “BLK/RED” wire of additional heater relay No.3 socket and vehicle body ground • Between “RED” wire of additional heater relay No.3 socket and vehicle body ground. Repair if necessary. If the fault persists, replace the relay.

After Repair

Deal with any faults detected by SUZUKI scan tool.
Clear the DTC.
Carry out a road test followed by another check with the SUZUKI scan tool.

DTC P2120 Pedal position sensor 2 circuit

NOTE:

- **Priority when dealing with a number of faults:**
  If DTC P2120 and either one of DTC P0608, DTC P0609 or DTC P0651 are detected, deal with DTC P0608 Sensor Supply Circuit 1 Fail, DTC P0609 Sensor Supply Circuit 2 Fail or P0651 Sensor Reference Voltage Circuit/Open first.
- **If DTC P2120 is detected, engine speed maintained above 1000 rpm.**
- **If DTC P2120 and DTC P0225 are detected, engine speed fixed at 1300 rpm.**

Detecting Condition

• CC0: Open circuit or short circuit to ground • CC1: Short circuit to + 12 volt

Troubleshooting for CO0: open circuit or short circuit to ground

Check the connection and condition of the pedal position sensor connector Repair if necessary.
Check the connection and condition of the ECM E17 connector Repair if necessary.
Measure the resistance at the pedal position sensor terminals: • Between E97-6 terminal and E97-2 terminal of pedal position sensor If it is not approximately 1.17 – 2.43 KΩ, replace the pedal position sensor.
Disconnect the ECM E17 connector and the pedal position sensor connector. Check the insulation from earth on E17-21 terminal of ECM connector. Repair if necessary.
Check the continuity of the connection: • Between “RED/YEL” wire of pedal position sensor connector and E17-21 terminal of ECM connector Repair if necessary. If the fault persists, replace the pedal position sensor.

Troubleshooting for CC1: short circuit to + 12 volt

Check the connection and condition of the pedal position sensor connector Repair if necessary.
Check the connection and condition of the ECM E17 connector Repair if necessary.
Measure the resistance at the pedal position sensor terminals: • Between E97-6 terminal and E97-2 terminal of pedal position sensor If it is not approximately 1.17 – 2.43 KΩ, replace the pedal position sensor.
Disconnect the ECM E17 connector and the pedal position sensor connector. Check the insulation from the 12 V feed on E17-15 terminal and E17-21 terminal of ECM connector. Repair if necessary.
Check the continuity of the connections: • Between “RED/YEL” wire of pedal position sensor connector and E17-21 terminal of ECM connector • Between “RED/WHT” wire of pedal position sensor connector and E17-15 terminal of ECM connector • Between “PNK/BLK” wire of pedal position sensor connector and E17-27 terminal of ECM connector Repair if necessary.
Disconnect E17 connector from the ECM and the connector from the pedal position sensor. Check for insulation between E17-15 terminal and E17-21 terminal of ECM connector. Repair if necessary. If the fault persists, replace the pedal position sensor.

After Repair

Deal with any faults detected by SUZUKI scan tool.
Clear the DTC.
Carry out a road test followed by another check with the SUZUKI scan tool.

DTC P2226 Barometric pressure circuit malfunction

Detecting Condition

- CC1: Short circuit to +12 volts
- CC0: Open circuit or short circuit to ground

Troubleshooting

Replace the ECM

After Repair

Deal with any faults detected by SUZUKI scan tool.
Clear the DTC.
Carry out a road test followed by another check with the SUZUKI scan tool.

Fault Finding – Customer Complaints

NOTE:

Only consult this customer complaint after a complete check using the scan tool.

Symptom	Condition	Referring Table
No communication with the ECM	Not communication scan tool and ECM	Refer to Table 1
Starting fault	The engine does not start	Refer to Table 2
	The engine starts with difficulty or starts then stalls	Refer to Table 3
	Starting difficult with warm engine	Refer to Table 4
Idle speed fault	Rough idle speed (pumping)	Refer to Table 5
	Idle speed too high or too low	Refer to Table 6
Behaviour while driving	Unexpected acceleration/deceleration and engine stalling	Refer to Table 7
	Response fault	Refer to Table 8
	Engine stop (timing)	Refer to Table 9
	Engine jerking	Refer to Table 10
	Lack of power	Refer to Table 11
	Too much power	Refer to Table 12
Road holding	Excessive consumption	Refer to Table 13
	Overspeed when lifting off acceleration or changing gear	Refer to Table 14
	Engine dies when pulling away	Refer to Table 15
	The engine does not stop	Refer to Table 16
Noise, odours or smoke	Clanking engine, noisy engine	Refer to Table 17
	Squalling noise	Refer to Table 18
	Varied mechanical noise	Refer to Table 19
	Exhaust odours	Refer to Table 20
	Diesel odours	Refer to Table 21
	Blue, white or black smoke	Refer to Table 22
	Smoke (blue, white or black) on acceleration	Refer to Table 23

Table 1 No dialogue with the ECM

Troubleshooting

Try the scan tool on another vehicle.
Check the ECM earth point.
Check: • Check the connection between the scan tool and the data link connector • Check the main and circuit fuses
Check the voltage (12 volts) between the following terminals (ignition switch turned ON): • Between “WHT” wire and “BLK” wire of data link connector • Between “WHT” wire and “BLK/ORN” wire of data link connector Repair if necessary.
Check the insulation, continuity and absence of interference resistance of the connections: • Between C48-29 terminal of ECM connector and “BLK/RED” wire of main relay socket • Between C48-30 terminal of ECM connector and “BLK/RED” wire of main relay socket • Between E17-11 terminal of ECM connector and circuit fuse socket terminal • Between C48-24 terminal of ECM connector and “BLU/BLK” wire of main relay socket (relay control) • Between C48-31 terminal of ECM connector and vehicle body ground • Between C48-32 terminal of ECM connector and vehicle body ground • Between E17-31 terminal of ECM connector and “PNK/GRN” wire of data link connector (K-line) Repair if necessary.

Table 2 The engine does not start

Troubleshooting

Step	Action	Yes	No
1	Check that the fuel tank is correctly filled and that the fuel type is suitable. Is the fuel type suitable and the tank correctly filled?	Go to Step 2.	Refill the fuel tank correctly.
2	Is the starter motor working properly?	Go to Step 3.	Carry out the required repairs.
3	Check the following: • Check the low pressure circuit referring to "Test 1: Low Pressure Circuit Check" in this section • Check for leaks in the high pressure circuit • Check the electrical circuit referring to "Test 2: Electrical Circuit Check" in this section • Check the engine parameters referring to "Test 4: Parameter Check" in this section • Check the air inlet circuit referring to "Test 5: Air Inlet Circuit Check" in this section Is it in good condition?	Go to Step 4.	Carry out the required repairs.
4	Is the fuel flow actuator blocked?	Carry out the required repairs.	Go to Step 5.
5	Is the engine wiring harness cut off or jammed?	Carry out the required repairs.	Go to Step 6.
6	Check that the glow plugs are working properly. Is the glow plug resistance above 1 Ω?	Replace the glow plugs.	Go to Step 7.
7	Are the compressions correct?	Go to Step 8.	Carry out the required repairs.
8	Check the injectors referring to "Test 3: Injector Check" in this section. • Check the injection pump referring to "Test 7: High Pressure Pump Check" in this section • Check the ECM referring to "Test 6: ECM Check" in this section Is it in good condition?	End of fault finding.	Carry out the required repairs.

Table 3 The engine starts with difficulty or starts then stalls

Troubleshooting

Step	Action	Yes	No
1	Check that the fuel tank is correctly filled and that the fuel type is suitable. Is the fuel type suitable and the tank correctly filled?	Go to Step 2.	Refill the fuel tank correctly.
2	Check the following: • Check the low pressure circuit referring to “Test 1: Low Pressure Circuit Check” in this section • Check for leaks in the high pressure circuit • Check the electrical circuit referring to “Test 2: Electrical Circuit Check” in this section • Check the engine parameters referring to “Test 4: Parameter Check” in this section • Check the air inlet circuit referring to “Test 5: Air Inlet Circuit Check” in this section Is it in good condition?	Go to Step 3.	Carry out the required repairs.
3	Is the fuel flow actuator blocked?	Carry out the required repairs.	Go to Step 4.
4	Is the engine oil level correct?	Go to Step 5.	Top up the oil.
5	Is the catalytic converter sealed off or damaged?	Replace the catalytic converter.	Go to Step 6.
6	Is the engine wiring harness cut off or jammed?	Carry out the required repairs.	Go to Step 7.
7	Check that the glow plugs are working properly. Is the glow plug resistance over 1 Ω?	Replace the glow plug.	Go to Step 8.
8	Are the compressions correct?	Go to Step 9.	Carry out the required repairs.
9	Check the following: • Check the injectors referring to “Test 3: Injector Check” in this section • Check the ECM referring to “Test 6: ECM Check” in this section Is it in good condition?	End of fault finding.	Carry out the required repairs.

Table 4 Starting difficult with warm engine

Troubleshooting

Step	Action	Yes	No
1	Check the following: • Check the low pressure circuit referring to “Test 1: Low Pressure Circuit Check” in this section • Check the injectors referring to “Test 3: Injector Check” in this section • Check the engine parameters referring to “Test 4: Parameter Check” in this section • Check the air inlet circuit referring to “Test 5: Air Inlet Circuit Check” in this section Is it in good condition?	Go to Step 2.	Carry out the required repairs.
2	Is the fuel flow actuator blocked?	Carry out the required repairs.	Go to Step 3.
3	Are the compressions correct?	Go to Step 4.	Carry out the required repairs.
4	Is the engine wiring harness cut off or jammed?	Carry out the required repairs.	Go to Step 5.
5	Check the ECM referring to “Test 6: ECM Check” in this section Is it in good condition?	End of fault finding.	Carry out the required repairs.

Table 5 Rough idle speed (pumping)

Troubleshooting

Step	Action	Yes	No
1	Check the following: • Check the low pressure circuit referring to "Test 1: Low Pressure Circuit Check" in this section • Check the engine parameters referring to "Test 4: Parameter Check" in this section Is it in good condition?	Go to Step 2.	Carry out the required repairs.
2	Is the engine wiring harness cut off or jammed?	Carry out the required repairs.	Go to Step 3.
3	Is the fuel flow actuator blocked?	Carry out the required repairs.	Go to Step 4.
4	Check for leaks in the high pressure circuit. Is it in good condition?	Go to Step 5.	Carry out the required repairs.
5	Check that the glow plugs are working properly. Is the glow plug resistance over 1 Ω?	Replace the glow plug.	Go to Step 6.
6	Are the compressions correct?	Go to Step 7.	Carry out the required repairs.
7	Check the following: • Check the injectors referring to "Injector Check" in this section • Check the injection pump referring to "Test 7: High Pressure Pump Check" in this section Is it in good condition?	End of fault finding.	Carry out the required repairs.

Table 6 Idle speed too high/too low

Troubleshooting

Step	Action	Yes	No
1	Check the following: • Check the electrical circuit referring to “Test 2: Electrical Circuit Check” in this section • Check the engine parameters referring to “Test 4: Parameter Check” in this section Is it in good condition?	Go to Step 2.	Carry out the required repairs.
2	Is the clutch linkage correct?	Go to Step 3.	Carry out the required repairs.
3	Check the ECM referring to “Test 6: ECM Check” in this section Is it in good condition?	End of fault finding.	Carry out the required repairs.

Table 7 Unexpected acceleration/deceleration and engine stalling

Troubleshooting

Step	Action	Yes	No
1	Check the following: • Check the engine parameters referring to “Test 4: Parameter Check” in this section • Check the air inlet circuit referring to “Test 5: Air Inlet Circuit Check” in this section Is it in good condition?	Go to Step 2.	Carry out the required repairs.
2	Is the engine wiring harness cut off or jammed?	Carry out the required repairs.	Go to Step 3.
3	Check the injectors referring to “Test 3: Injector Check” in this section Is it in good condition?	Go to Step 4.	Carry out the required repairs.
4	Check that the engine has not aspirated its oil (engine stalls).	Carry out the required repairs.	Go to Step 5.
5	Check the ECM referring to “Test 6: ECM Check” in this section Is it in good condition?	End of fault finding.	Carry out the required repairs.

Table 8 Response fault

Troubleshooting

Step	Action	Yes	No
1	Check the following: • Check the engine parameters referring to “Test 4: Parameter Check” in this section • Check the air inlet circuit referring to “Test 5: Air Inlet Circuit Check” in this section Is it in good condition?	Go to Step 2.	Carry out the required repairs.
2	Check that the turbocharger is working properly. Is the turbocharger correct?	Go to Step 3.	Carry out the required repairs.
3	Check the low pressure circuit referring to “Test 1: Low Pressure Circuit Check” in this section Is it in good condition?	Go to Step 4.	Carry out the required repairs.
4	Are the compressions correct?	Go to Step 5.	Carry out the required repairs.
5	Check for leaks in the high pressure circuit. Is it in good condition?	Go to Step 6.	Carry out the required repairs.
6	Check the following: • Check the injectors referring to “Test 3: Injector Check” in this section • Check the ECM referring to “Test 6: ECM Check” in this section Is it in good condition?	End of fault finding.	Carry out the required repairs.

Table 9 Engine stop/stalling

Troubleshooting

Step	Action	Yes	No
1	Check that the fuel tank is correctly filled and that the fuel type is suitable. Is the fuel type suitable and the tank correctly filled?	Go to Step 2.	Refill the fuel tank correctly.
2	Check the following: • Check the low pressure circuit referring to “Test 1: Low Pressure Circuit Check” in this section • Check for leaks in the high pressure circuit • Check the electrical circuit referring to “Test 2: Electrical Circuit Check” in this section • Check the engine parameters referring to “Test 4: Parameter Check” in this section • Check the air inlet circuit referring to “Test 5: Air Inlet Circuit Check” in this section Is it in good condition?	Go to Step 3.	Carry out the required repairs.
3	Is the fuel flow actuator blocked?	Carry out the required repairs.	Go to Step 4.
4	Is the engine wiring harness cut off or jammed?	Carry out the required repairs.	Go to Step 5.
5	Is the catalytic converter sealed off or damaged?	Replace the catalytic converter.	Go to Step 6.
6	Check that the engine has not aspirated its oil (engine stalls).	Carry out the required repairs.	Go to Step 7.
7	Check the following: • Check the injection pump referring to “Test 7: High Pressure Pump Check” in this section. • Check the ECM referring to “Test 6: ECM Check” in this section. Is it good condition?	End of fault finding.	Carry out the required repairs.

Table 10 Engine jerking

Troubleshooting

Step	Action	Yes	No
1	Check that the fuel tank is correctly filled and that the fuel type is suitable. Is the fuel type suitable and the tank correctly filled?	Go to Step 2.	Refill the fuel tank correctly.
2	Check the following: • Check the low pressure circuit referring to “Test 1: Low Pressure Circuit Check” in this section • Check the engine parameters referring to “Test 4: Parameter Check” in this section Is it in good condition?	Go to Step 3.	Carry out the required repairs.
3	Is the engine wiring harness cut off or jammed?	Carry out the required repairs.	Go to Step 4.
4	Check that the glow plugs are working properly. Is the glow plug resistance over 1 Ω?	Replace the glow plug.	Go to Step 5.
5	Are the compressions correct?	Go to Step 6.	Carry out the required repairs.
6	Is the valve clearance properly adjusted?	Go to Step 7.	Make the necessary adjustments.
7	Check the following: • Check the injection pump referring to “Test 7: High Pressure Pump Check” in this section • Check the ECM referring to “Test 6: ECM Check” in this section Is it in good condition?	End of fault finding.	Carry out the required repairs.

Table 11 Lack of power

Troubleshooting

Step	Action	Yes	No
1	Check the following: • Check the engine parameters referring to "Test 4: Parameter Check" in this section • Check the air inlet circuit referring to "Test 5: Air Inlet Circuit Check" in this section Is it in good condition?	Go to Step 2.	Carry out the required repairs.
2	Is the engine oil level correct?	Go to Step 3.	Top up the oil.
3	Is the catalytic converter sealed off or damaged?	Replace the catalytic converter.	Go to Step 4.
4	Check that the turbocharger is working properly. Is the turbocharger correct?	Go to Step 5.	Carry out the required repairs.
5	Check the following: • Check the low pressure circuit referring to "Test 1: Low Pressure Circuit Check" in this section • Check the injectors referring to "Test 3: Injector Check" in this section Is it in good condition?	Go to Step 6.	Carry out the required repairs.
6	Are the compressions correct?	Go to Step 7.	Carry out the required repairs.
7	Is the valve clearance properly adjusted?	End of fault finding.	Make the necessary adjustments.

Table 12 Too much power

Troubleshooting

Step	Action	Yes	No
1	Check the following: • Check the engine parameters referring to “Test 4: Parameter Check” in this section • Check the air inlet circuit referring to “Test 5: Air Inlet Circuit Check” in this section Is it in good condition?	Go to Step 2.	Carry out the required repairs.
2	Check that the engine has not aspirated its oil (engine stalls).	Carry out the required repairs.	Go to Step 3.
3	Check the following: • Check the injectors referring to “Test 3: Injector Check” in this section • Check the ECM referring to “Test 6: ECM Check” in this section Is it in good condition?	End of fault finding.	Carry out the required repairs.

Table 13 Excessive consumption

Troubleshooting

Step	Action	Yes	No
1	Check the low pressure circuit referring to “Test 1: Low Pressure Circuit Check” in this section Is it in good condition?	Go to Step 2.	Carry out the required repairs.
2	Does the fuel flow actuator have a leak?	Carry out the required repairs.	Go to Step 3.
3	Is the fuel temperature sensor leaking?	Replace the fuel temperature sensor.	Go to Step 4.
4	Check the following: • Check the injectors referring to “Test 3: Injector Check” in this section • Check for leaks in the high pressure circuit • Check the engine parameters referring to “Test 4: Parameter Check” in this section • Check the air inlet circuit referring to “Test 5: Air Inlet Circuit Check” in this section Is it in good condition?	Go to Step 5.	Carry out the required repairs.
5	Is the engine oil level correct?	Go to Step 6.	Top up the oil.
6	Is the catalytic converter clogged or damaged?	Replace the catalytic converter.	Go to Step 7.
7	Check that the turbocharger is working properly. Is the turbocharger correct?	Go to Step 8.	Carry out the required repairs.
8	Are the compressions correct?	Go to Step 9.	Carry out the required repairs.
9	Check the ECM referring to “Test 6: ECM Check” in this section. Is it in good condition?	End of fault finding.	Carry out the required repairs.

Table 14 Overspeed when lifting off accelerator or changing gear

Troubleshooting

Step	Action	Yes	No
1	Check the engine parameters referring to “Test 4: Parameter Check” in this section. Is it in good condition?	Go to Step 2.	Carry out the required repairs.
2	Is the engine wiring harness cut or pinched?	Carry out the required repairs.	Go to Step 3.
3	Is the clutch linkage properly adjusted?	Go to Step 4.	Carry out the required repairs.
4	Check that the engine has not aspirated its oil (engine stalls).	Carry out the required repairs.	Go to Step 5.
5	Check that the turbocharger is working properly. Is the turbocharger correct?	Go to Step 6.	Carry out the required repairs.
6	Check the following: • Check the injectors referring to “Test 3: Injector Check” in this section • Check the ECM referring to “Test 6: ECM Check” in this section. Is it in good condition?	End of fault finding.	Carry out the required repairs.

Table 15 Engine dies on pulling away

Troubleshooting

Step	Action	Yes	No
1	Check the following: • Check the low pressure circuit referring to “Test 1: Low Pressure Circuit Check” in this section • Check the engine parameters referring to “Test 4: Parameter Check” in this section • Check the air inlet circuit referring to “Test 5: Air Inlet Circuit Check” in this section Is it in good condition?	Go to Step 2.	Carry out the required repairs.
2	Is the catalytic converter clogged or damaged?	Replace the catalytic converter.	Go to Step 3.
3	Is the clutch linkage properly adjusted?	Go to Step 4.	Carry out the required repairs.
5	Is the engine wiring harness cut or pinched?	Carry out the required repairs.	Go to Step 6.
6	Is the fuel flow actuator blocked?	Carry out the required repairs.	Go to Step 7.
7	Check the ECM referring to “Test 6: ECM Check” in this section Is it in good condition?	End of fault finding.	Carry out the required repairs.

Table 16 The engine does not stop

Troubleshooting

Step	Action	Yes	No
1	Check the engine parameters referring to “Test 4: Parameter Check” in this section. Is it in good condition?	Go to Step 2.	Carry out the required repairs.
2	Check that the engine has not aspirated its oil (engine stalls).	Carry out the required repairs.	Go to Step 3.
3	Check the ECM referring to “Test 6: ECM Check” in this section. Is it in good condition?	End of fault finding.	Carry out the required repairs.

Table 17 Clanking engine, noisy engine

Troubleshooting

Step	Action	Yes	No
1	Check the following: • Check the engine parameters referring to “Test 4: Parameter Check” in this section • Check the air inlet circuit referring to “Test 5: Air Inlet Circuit Check” in this section Is it in good condition?	Go to Step 2.	Carry out the required repairs.
2	Check that the glow plugs are working properly. Is the glow plug resistance above 1 Ω?	Replace the glow plug.	Go to Step 3.
3	Are the compressions correct?	Go to Step 4.	Carry out the required repairs.
4	Check the following: • Check the low pressure circuit referring to “Test 1: Low Pressure Circuit Check” in this section • Check the injectors referring to “Test 3: Injector Check” in this section Is it in good condition?	End of fault finding.	Carry out the required repairs.

Table 18 Squalling noise

Troubleshooting

Step	Action	Yes	No
1	Check the engine parameters referring to “Test 4: Parameter Check” in this section Is it in good condition?	Go to Step 2.	Carry out the required repairs.
2	Is the engine wiring harness cut or pinched?	Carry out the required repairs.	Go to Step 3.
3	Is the fuel flow actuator blocked?	Carry out the required repairs.	Go to Step 4
4	Check the ECM referring to “Test 6: ECM Check” in this section Is it in good condition?	End of fault finding.	Carry out the required repairs.

Table 19 Various mechanical noises

Troubleshooting

Step	Action	Yes	No
1	Check that the injectors are not making a buzzing noise (injector discharge).	Carry out the required repairs.	Go to Step 2.
2	Are the mounting clips on the injector pipes broken or missing?	Carry out the required repairs.	Go to Step 3.
3	Check the engine parameters referring to “Test 4: Parameter Check” in this section Is it in good condition?	Go to Step 4.	Carry out the required repairs.
4	Is the catalytic converter clogged or damaged?	Replace the catalytic converter.	Go to Step 5.
5	Check the following: • Check the injectors referring to “Test 3: Injector Check” in this section • Check the air inlet circuit referring to “Test 5: Air Inlet Circuit Check” in this section Is it in good condition?	Go to Step 6.	Carry out the required repairs.
6	Is the clutch linkage properly adjusted?	Go to Step 7.	Carry out the required repairs.
7	Check that the turbocharger is working properly. Is the turbocharger correct?	Go to Step 8.	Carry out the required repairs.
8	Is the valve clearance properly adjusted?	End of fault finding.	Make the necessary adjustments.

Table 20 Exhaust odours

Troubleshooting

Step	Action	Yes	No
1	Check the following: • Check the engine parameters referring to “Test 4: Parameter Check” in this section • Check the air inlet circuit referring to “Test 5: Air Inlet Circuit Check” in this section Is it in good condition?	Go to Step 2.	Carry out the required repairs.
2	Check that the engine has not aspirated its oil (engine stalls).	Carry out the required repairs.	Go to Step 3.
3	Check that the turbocharger is working properly. Is the turbocharger correct?	Go to Step 4.	Carry out the required repairs.
4	Is the engine oil level correct?	Go to Step 5.	Top up the oil.
5	Is the catalytic converter clogged or damaged?	Replace the catalytic converter.	Go to Step 6.
6	Check the following: • Check the injectors referring to “Test 3: Injector Check” in this section • Check the ECM referring to “Test 6: ECM Check” in this section Is it in good condition?	End of fault finding.	Carry out the required repairs.

Table 21 Diesel odours

Troubleshooting

Step	Action	Yes	No
1	Check the low pressure circuit referring to “Test 1: Low Pressure Circuit Check” in this section. Is it in good condition?	Go to Step 2.	Carry out the required repairs.
2	Is the fuel flow actuator leaking?	Carry out the required repairs.	Go to Step 3.
3	Is the fuel temperature sensor leaking?	Replace the fuel temperature sensor.	Go to Step 4.
4	Check the following: • Check the injectors referring to “Test 3: Injector Check” in this section • Check for leaks in the high pressure circuit Is it in good condition?	End of fault finding.	Carry out the required repairs.

Table 22 Blue, white or black smoke

Troubleshooting

Step	Action	Yes	No
1	Check the following: • Check the engine parameters referring to "Test 4: Parameter Check" in this section • Check the air inlet circuit referring to "Test 5: Air Inlet Circuit Check" in this section Is it in good condition?	Go to Step 2.	Carry out the required repairs.
2	Is the fuel flow actuator blocked?	Carry out the required repairs.	Go to Step 3.
3	Is the engine oil level correct?	Go to Step 4.	Top up the oil.
4	Check the low pressure circuit referring to "Test 1: Low Pressure Circuit Check" in this section Is it in good condition?	Go to Step 5.	Carry out the required repairs.
5	Is the catalytic converter clogged or damaged?	Replace the catalytic converter.	Go to Step 6.
6	Check that the engine has not aspirated its oil (engine stalls).	Carry out the required repairs.	Go to Step 7.
7	Check that the glow plugs are working properly. Is the glow plug resistance above 1 Ω?	Replace the glow plugs.	Go to Step 8.
8	Are the compressions correct?	Go to Step 9.	Carry out the required repairs.
9	Check the injectors referring to "Test 3: Injector Check" in this section Is it in good condition?	End of fault finding.	Carry out the required repairs.

Table 23 Blue, black or white smoke when accelerating

Troubleshooting

Step	Action	Yes	No
1	Check the following: • Check the engine parameters referring to "Test 4: Parameter Check" in this section • Check the air inlet circuit referring to "Test 5: Air Inlet Circuit Check" in this section Is it in good condition?	Go to Step 2.	Carry out the required repairs.
2	Check the low pressure circuit referring to "Test 1: Low Pressure Circuit Check" in this section. Is it in good condition?	Go to Step 3.	Carry out the required repairs.
3	Is the engine oil level correct?	Go to Step 4.	Top up the oil.
4	Check that the turbocharger is working properly. Is the turbocharger correct?	Go to Step 5.	Carry out the required repairs.
5	Is the catalytic converter clogged or damaged?	Replace the catalytic converter.	Go to Step 6.
6	Check that the engine has not aspirated its oil (engine stalls).	Carry out the required repairs.	Go to Step 7.
7	Check that the glow plugs are working properly. Is the glow plug resistance above 1 Ω?	Replace the glow plugs.	Go to Step 8.
8	Are the compressions correct?	Go to Step 9.	Carry out the required repairs.
9	Check for leaks in the high pressure circuit Is it in good condition?	Go to Step 10.	Carry out the required repairs.
10	Is the engine wiring harness cut or pinched?	Carry out the required repairs.	Go to Step 11.
11	Check the following: • Check the injectors referring to "Test 3: Injector Check" in this section • Check the ECM referring to "Test 6: ECM Check" in this section Is it in good condition?	End of fault finding.	Carry out the required repairs.

Fault Finding – Tests

Some specific checks are grouped together into tests and are performed as required in the various fault finding tables or when interpreting faults.

Test 1: Low pressure circuit check

Test 2: Electrical circuit check

Test 3: Injector check

Test 4: Parameter check

Test 5: Air inlet circuit check

Test 6: ECM check

Test 7: High pressure pump check

Test 8: Diesel filter check

Test 1: Low Pressure Circuit Check

Step	Action	Yes	No
1	Check the conformity of the low pressure circuit connections. Are the low pressure circuit connections in order?	Go to Step 2.	Carry out the required repairs.
2	Check the condition of the priming pump, and that it is working properly. Look for leaks on the unions. Are there leaks in the hoses and unions?	Carry out the required repairs.	Go to Step 3.
3	Check for air bubbles in the diesel fuel. Are there any air bubbles in the low pressure circuit?	Bleed the low pressure circuit. Place a container under the filter: • Disconnect the leak return hose from the filter and cap the filter. • Pump with the priming pump until there is no air left. • Reconnect the return hose immediately.	Low pressure circuit correct.

Test 2: Electrical Circuit Check

Step	Action	Yes	No
1	Check the battery charge and that the alternator is working properly. Is the charge circuit correct?	Go to Step 2.	Carry out the required repairs.
2	Check the fuses. Are the fuses correct?	Go to Step 3.	Carry out the required repairs.
3	Check that the main relay is working properly. Is the main relay working properly?	Go to Step 4.	Replace the relay.
4	Check the engine earths. Are the engine earths correct?	The electrical circuit is correct.	Carry out the required repairs.

Test 3: Injector Check

Step	Action	Yes	No
1	Make a visual inspection around the injectors. Is there diesel fuel around the injectors?	Locate the source of leak and carry out the required repairs.	Go to Step 2.
2	Disconnect connector from cylinder No. 1 injector. Is there a noticeable change in engine noise?	Reconnect connector from cylinder No. 1 injector. Carry out the same test on the other cylinders to identify a possible suspected injector.	Replace faulty injector.

Test 4: Parameter Check

Step	Action	Yes	No
1	Use the SUZUKI scan tool to check that injector calibration code corresponds to the injectors. Is injector calibration code correctly filled in?	Check that the “Data List” value (parameter) is consistent.	Use the SUZUKI scan tool to program injector calibration code into the memory, paying attention to the cylinder numbers.

Test 5: Air Inlet Circuit Check

Step	Action	Yes	No
1	Check for the presence of a leak/intake of air. Presence of a leak/intake of air.	Carry out the required repairs.	Go to Step 2.
2	Check the condition of the air filter. Air filter correct?	Go to Step 3.	Replace the air filter.
3	Check that the intake manifold is not obstructed (dirty). Is the intake manifold blocked?	Clean the intake manifold.	Air circuit correct.

Test 6: ECM Check

Step	Action	Yes	No
1	Check the condition of the ECM connections (for bent pin, signs of oxidation, silicone, etc.). Check that the ECM connectors are locked correctly. Are the connectors poorly locked?	Lock the connectors correctly.	ECM correct.

Test 7 High Pressure Pump Check

NOTE:

It is useless and dangerous to engage the starter motor for more than 5 seconds.

Step	Action	Yes	No
1	It is possible to check the injection pump capacity by carrying out the following procedure: • Disconnect the fuel flow actuator connector • Disconnect connector from the four injectors • Connect the SUZUKI scan tool and check the rail pressure parameter • Run the starter motor for 5 seconds • Read the maximum rail pressure value Does the rail pressure greater than 1050 bar?	Injection pump correct.	Check the diesel filter referring to “Test 8 Diesel Filter Check” in this section.

Test 8: Diesel filter check

Step	Action	Yes	No
1	Check the conformity of the diesel filter. Is the diesel filter in order?	Go to Step 2.	Replace the filter.
2	With ignition switch off, analyze the diesel fuel in the diesel filter. • Disconnect the supply and return hoses from the filter. • Immediately block the filter inlets/outlets with the appropriate caps. • Remove the filter from its bracket and shake it well, keeping the caps in place and empty the contents of the filter into glass container by lifting up a protective cap and undoing the bleed screw. Can you see at bottom of the container a deposit of black particles?	Go to Step 3.	Diesel filter correct.
3	Pass a magnet beneath the container to collect only all the metal particles. Take the magnet away from the container. Do the particles collected using the magnet cover a surface area greater than 1 cm^2.	Repair or replace the entire injection system.	Diesel filter correct.

Special Tool

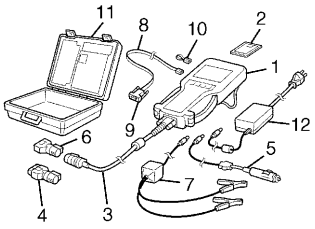

Tech 2 kit (SUZUKI scan tool)
(See NOTE)

NOTE:

This kit includes the following items.
1. Tech 2, 2. PCMCIA card, 3. DLC cable, 4. SAE 16/19 adapter, 5. Cigarette cable, 6. DLC loopback adapter, 7. Battery power cable, 8. RS232 cable, 9. RS232 adapter, 10. RS232 loopback connector, 11. Storage case, 12. Power supply

SECTION 6A2

ENGINE MECHANICAL (K9K ENGINE)

WARNING:

For vehicles equipped with a Supplemental Restraint (Air Bag) System:

- **Service on and around the air bag system components or wiring must be performed only by an authorized SUZUKI dealer. Refer to "Air Bag System Components and Wiring Location View" under "General Description" in air bag system section in order to confirm whether you are performing service on or near the air bag system components or wiring. Please observe all WARNINGs and "Service Precautions" under "On-Vehicle Service" in air bag system section before performing service on or around the air bag system components or wiring. Failure to follow WARNINGs could result in unintentional activation of the system or could render the system inoperative. Either of these two conditions may result in severe injury.**
- **Technical service work must be started at least 90 seconds after the ignition switch is turned to the "LOCK" position and the negative cable is disconnected from the battery. Otherwise, the system may be activated by reserve energy in the Sensing and Diagnostic Module (SDM).**

CAUTION:

Be sure to read "Precaution" in Section 6E2 before disconnecting fuel line or removing fuel system part(s). Failure to follow "Precautions" could result unneeded fuel system repairs.

CONTENTS

Diagnosis Information and Procedure 6A2-3
- Diagnosis Table 6A2-3
- Compression Check 6A2-3
- Oil Pressure Check 6A2-4
- Valve Lash (Clearance) 6A2-6
  - Measurement of valve lash (clearance) 6A2-6
  - Replacement of tappet 6A2-6

Repair Instructions 6A2-8
- Air Cleaner Element Removal and Installation 6A2-8
- Air Cleaner Element Inspection and Cleaning 6A2-8
- Air Cleaner Assembly Removal and Installation 6A2-8
- Cylinder Head Cover Components 6A2-9
- Cylinder Head Cover Removal and Installation 6A2-9
- Oil Pressure Switch Removal and Installation 6A2-11
- Heat Exchanger Removal and Installation 6A2-11
- EGR Valve and Intake Pipe Components 6A2-13
- EGR Valve and Intake Pipe Removal and Installation 6A2-13
- EGR Valve and Intake Pipe Inspection 6A2-16
- Turbocharger Components 6A2-17
- Turbocharger Removal and Installation 6A2-18
- Turbocharger Inspection 6A2-20
- Exhaust Manifold Components 6A2-20
- Exhaust Manifold Removal and Installation 6A2-21
- Oil Pan and Oil Pump Strainer Components 6A2-22
- Oil Pan and Oil Pump Strainer Removal and Installation 6A2-23
- Engine Assembly Removal and Installation 6A2-27
- Timing Belt and Belt Tensioner Components 6A2-30
- Timing Belt and Belt Tensioner Removal and Installation 6A2-31
- Timing Belt and Belt Tensioner Inspection 6A2-38
- Oil Pump and Oil Pump Chain Components 6A2-39
- Oil Pump and Oil Pump Chain Removal and Installation 6A2-40

Oil Pump and Oil Pump Chain Inspection 6A2-42
Camshaft and Tappet Components 6A2-43
Camshaft and Tappet Removal and Installation 6A2-44
Camshaft and Tappet Inspection 6A2-48
Valves and Cylinder Head Components ... 6A2-52
Valves and Cylinder Head Assembly Removal and Installation 6A2-52
Valves and Cylinder Head Assembly Inspection 6A2-55
Valves and Cylinder Head Assembly Disassembly and Reassembly 6A2-55
Valves and Cylinder Head Components Inspection 6A2-58
Pistons, Piston Rings, Connecting Rods and Cylinders Components 6A2-61
Pistons, Piston Rings, Connecting Rods and Cylinders Removal and Installation ... 6A2-62
Pistons, Piston Rings, Connecting Rods and Cylinders Disassembly and Reassembly 6A2-64
Pistons, Piston Rings, Connecting Rods and Cylinders Inspection 6A2-66
Main Bearings, Crankshaft and Cylinder Block Components 6A2-71
Main Bearings, Crankshaft and Cylinder Block Removal and Installation 6A2-71
Main Bearings, Crankshaft and Cylinder Block Inspection 6A2-78
Required Service Material 6A2-81
Tightening Torque Specifications 6A2-81
Special Tool 6A2-83

Diagnosis Information and Procedure

Diagnosis Table

Refer to “Fault Finding-Customer Complaints” in Section 6-2.

Compression Check

Check compression pressure on all 4 cylinders as follows:

1) Warm up engine.
2) Stop engine after warming up.

NOTE:

After warming up engine, place transmission gear shift lever in “Neutral” and set parking brake and block drive wheels.

3) Disconnect negative (–) cable at battery.

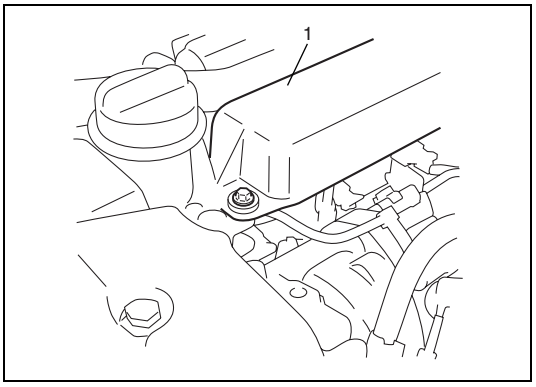

4) Remove injector cover (1).
5) Remove all glow plugs referring to “Glow Plug Removal and Installation” in Section 6E2.
6) Disconnect ECM connectors.

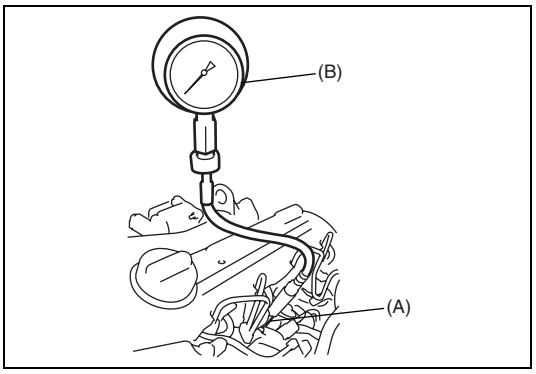

7) Install special tool (dummy heater plug) into glow plug hole.

Special tool
(A): 09917-78120
(B): 09912-57821

8) Connect negative (–) cable at battery.

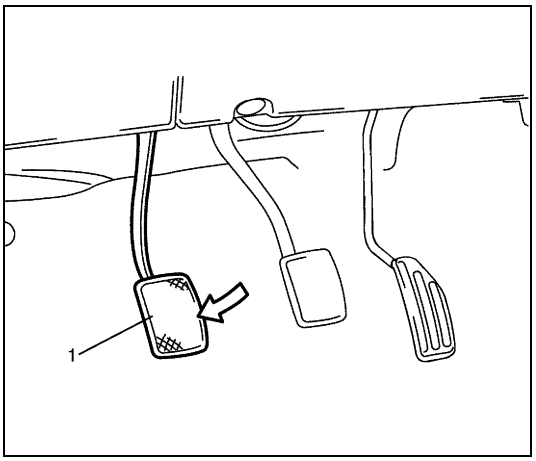

9) Disengage clutch (1) (to lighten starting load on engine).
10) Crank engine with fully charged battery and read highest pressure on compression gauge.

Compression pressure specification
Max. difference between any two cylinders:
300 kPa (3.0 kg/cm^2, 42.6 psi)

11) Carry out steps 7) to 10) on each cylinder to obtain 4 readings.
12) Disconnect negative (–) cable at battery.
13) After checking, install glow plugs referring to “Glow Plug Removal and Installation” in Section 6E2.

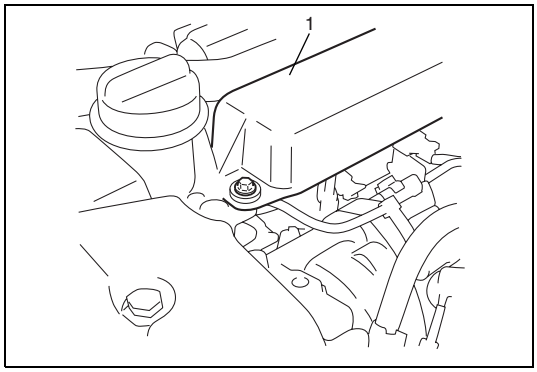

14) Install injector cover (1).
15) Connect ECM connector.
16) Connect negative (–) cable at battery.

Oil Pressure Check

WARNING:
To avoid danger of being burned, do not touch exhaust manifold when exhaust system is hot.

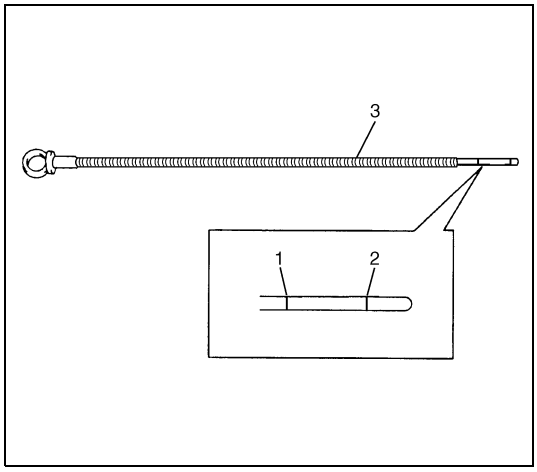

1) Prior to checking oil pressure, check the following items.
   - Oil level in oil pan.
     If oil level is low, add oil up to Full level mark (1) on oil level gauge (3).
   - Oil quality.
     If oil is discolored, or deteriorated, change it.
     For particular oil to be used, refer to “Engine Oil and Filter” in Section 0B.
   - Oil leaks.
     If leak is found, repair it.

2. Low level mark

2) Detach degassing tank from its bracket.

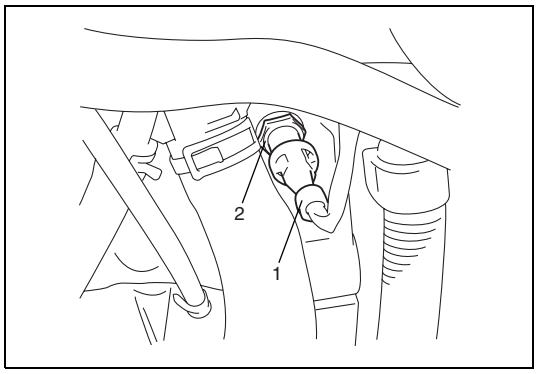

3) Disconnect oil pressure switch connector (1) and remove oil pressure switch (2) from cylinder block.

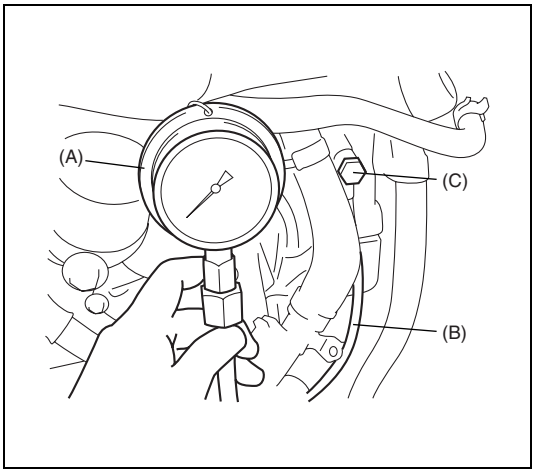

4) Install special tools (Oil pressure gauge) to vacated threaded hole.

CAUTION:

Be careful not to make special tool touch exhaust manifold when installing because exhaust manifold becomes very hot.

Special tool
(A): 09915-77311
(B): 09915-77420
(C): 09915-77430

5) Start engine and warm it up to normal operating temperature.

NOTE:

Be sure to place transmission gear shift lever in "Neutral" and set parking brake and block drive wheels.

6) After warming up, measure oil pressure.

Oil pressure specification:

100 – 140 kPa (1.0 – 1.4 kg/cm^2, 14.2 – 20.0 psi) at idle speed

330 – 370 kPa (3.3 – 3.7 kg/cm^2, 46.9 – 52.5 psi) at 3,000 rpm

7) Stop engine and remove oil pressure gauge and attachment.

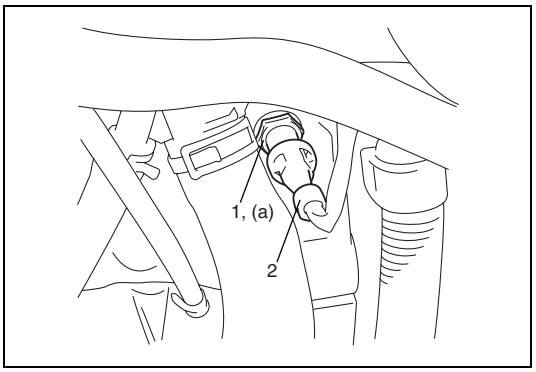

8) Before reinstalling oil pressure switch (1) and tighten switch to specified torque.

Tightening torque
Oil pressure switch (a): 25 N·m (2.5 kg-m, 18.0 lb-ft)

9) Connect oil pressure switch coupler (2).
10) Install degassing tank to its bracket.
11) Start engine and check oil pressure switch for oil leakage. If oil leakage is found, repair it.

Valve Lash (Clearance)

Measurement of valve lash (clearance)

1) Disconnect negative (–) cable at battery.
2) Remove cylinder head cover referring to “Cylinder Head Cover Removal and Installation” in this section.

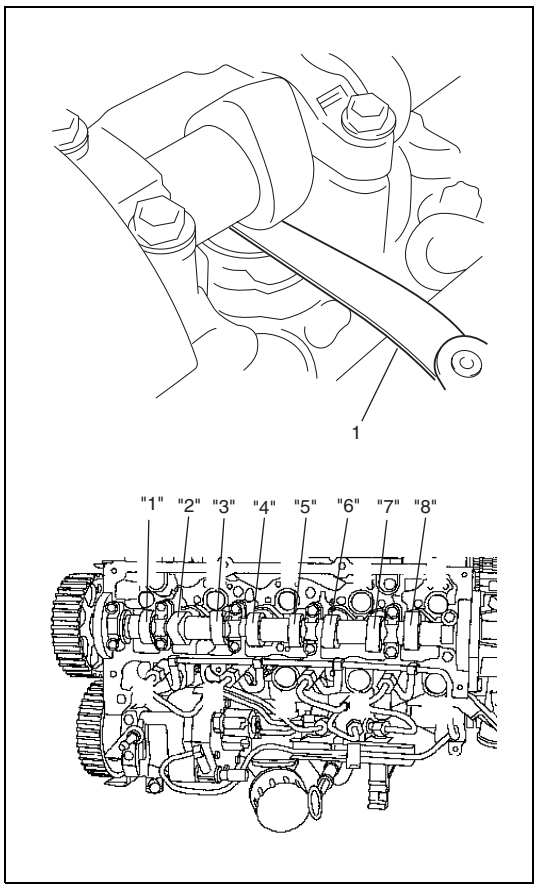

3) Turn crankshaft pulley clockwise until cam lobes become perpendicular to tappet faces at valves “1” and “6” as shown in figure.
4) Measure valve lashes with thickness gauge (1) according to the following procedure.
   a) Check valve lashes at valves “1” and “6”.
   b) Turn camshaft by 90° (by turning crankshaft with wrench).
   c) Make sure that cam lobes are perpendicular to tappet faces at valves to be checked (in this case, “5” and “8”), if not, adjust it by turning crankshaft. Check valve lashes.
   d) In the same manner as b) - c), check valve lashes at valves “4” and “7”.
   e) In the same manner as b) - c), check valve lashes at valves “2” and “3”.

If valve lash (clearance) is out of specification, record valve lash (clearance) and adjust it to specification by replacing tappet. Refer to “Replacement of tappet” under “Valve Lash (Clearance)” in this section.

Valve lash (clearance) specification

	When cold
Intake	**0.125 – 0.250 mm (0.00493 – 0.00984 in.)**
Exhaust	**0.325 – 0.450 mm (0.01280 – 0.01771 in.)**

Replacement of tappet

1) Measure valve lashes referring to “Measurement of Valve Lash (Clearance)” under “Valve Lash (Clearance)” in this section.
2) Remove tappet referring to “Camshaft and Tappet” in this section.

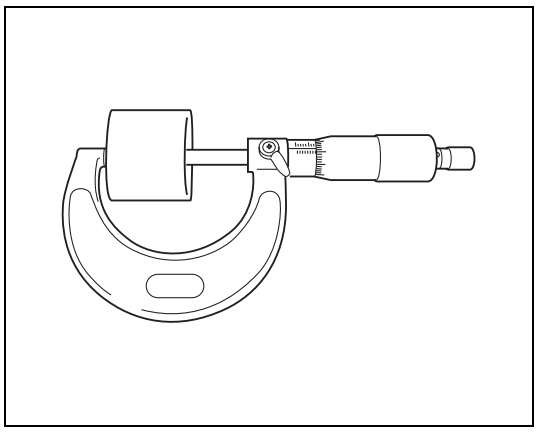

3) Using micrometer, measure the thickness of the removed tappet, and determine replacement tappet by calculating the thickness of new tappet with the following formula and table.

Intake side
A = B + C – 0.1875 mm (0.007382 in.)

Exhaust side
A = B + C – 0.3875 mm (0.015256 in.)

A: Thickness of new tappet
B: Thickness of removed tappet
C: Measured valve lash (clearance)

Example of intake side:
When thickness of removed tappet is 7.8875 mm (0.310531 in.), and measured valve lash (clearance) is 0.200 mm (0.00787 in.).
A = 7.8875 mm (0.310531 in.) + 0.200 mm (0.00787 in.) – 0.1875 mm (0.007382 in.) = 7.900 mm (0.31102 in.)
Calculated thickness of new tappet = 7.900 mm (0.31102 in.)

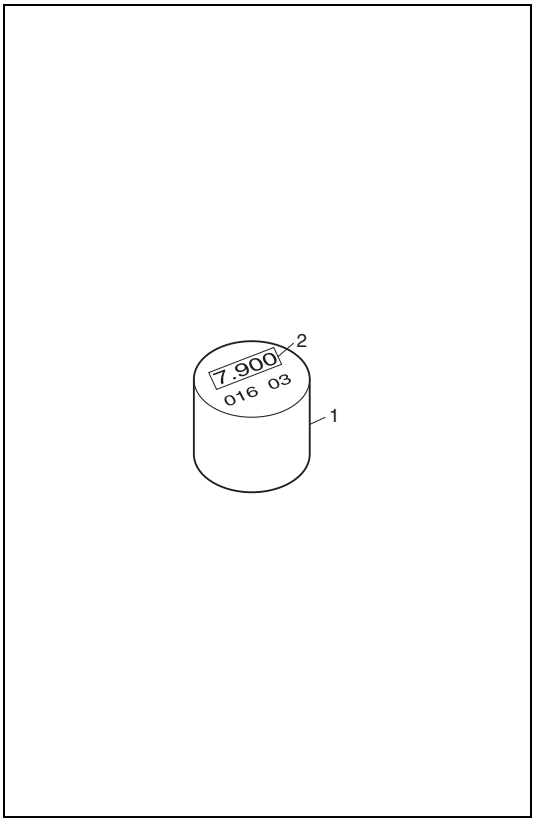

4) Select new tappet (1) with a thickness as close as possible to calculated value.

Available new tappets

Thickness mm (in.)	Thickness mm (in.)
7.550 mm (0.29724 in.)	7.875 mm (0.31004 in.)
7.575 mm (0.29823 in.)	7.900 mm (0.31102 in.)
7.600 mm (0.29921 in.)	7.925 mm (0.31201 in.)
7.625 mm (0.30020 in.)	7.950 mm (0.31299 in.)
7.650 mm (0.30118 in.)	7.975 mm (0.31398 in.)
7.675 mm (0.30217 in.)	8.000 mm (0.31496 in.)
7.700 mm (0.30315 in.)	8.025 mm (0.31595 in.)
7.725 mm (0.30413 in.)	8.050 mm (0.31693 in.)
7.750 mm (0.30512 in.)	8.075 mm (0.31791 in.)
7.775 mm (0.30610 in.)	8.100 mm (0.31890 in.)
7.800 mm (0.30709 in.)	8.125 mm (0.31988 in.)
7.825 mm (0.30807 in.)	8.150 mm (0.32087 in.)
7.850 mm (0.30906 in.)	

2. Tappet thickness

5) Install new tappet and camshaft referring to “Camshaft and Tappet Removal and Installation” in this section.
6) Measure valve lashes again referring to “Measurement of Valve Lash (Clearance)” under “Valve Lash (Clearance)” in this section.
7) Install cylinder head cover referring to “Cylinder Head Cover Removal and Installation” in this section.

Repair Instructions

Air Cleaner Element Removal and Installation

Removal

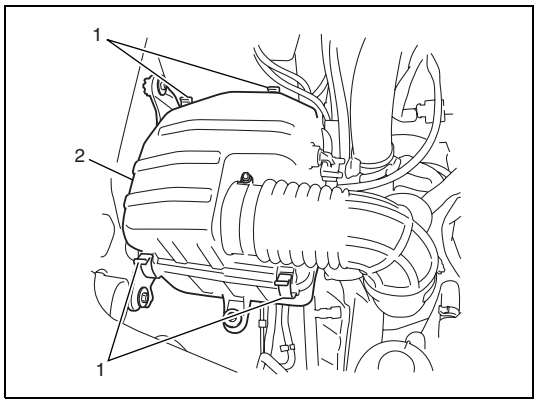

1) Open air cleaner case (2) unhooking its clamps (1).
2) Remove air cleaner element from case.

Installation

Reverse removal procedure for installation.

Air Cleaner Element Inspection and Cleaning

Inspection

Check element for dirt. Replace if excessively dirty element.

Cleaning

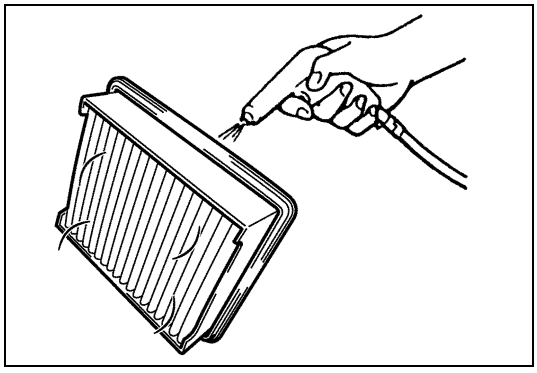

When cleaning element, blow off dust by compressed air from air outlet side of element (i.e., the side facing up when installed in air cleaner case.

Air Cleaner Assembly Removal and Installation

Removal

1) Disconnect negative (–) cable at battery.

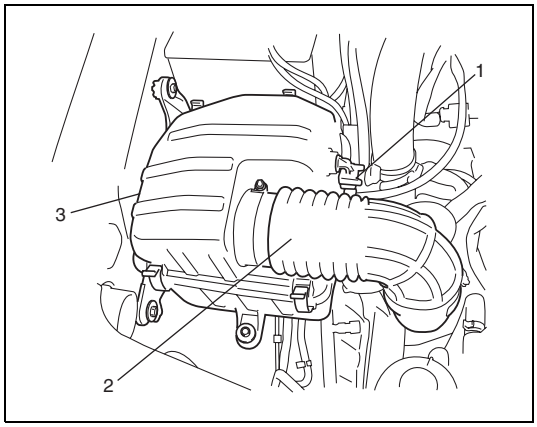

2) Disconnect IAT sensor No.1 connector (1).
3) Disconnect air cleaner outlet hose (2) from air cleaner assembly (3).
4) Remove air cleaner assembly from vehicle.

Installation

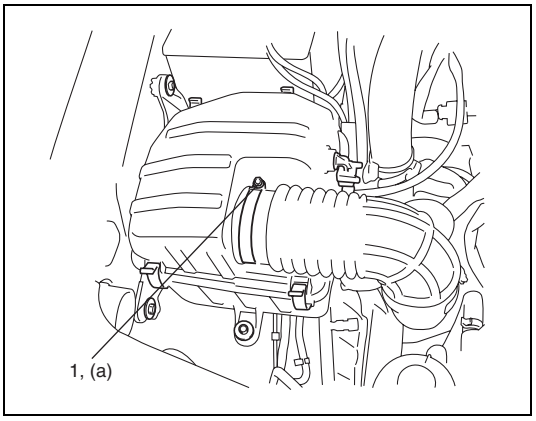

Reverse removal procedure for installation noting the followings.

- Tighten air cleaner outlet hose clamp (1) to specified torque.

Tightening torque
Air cleaner outlet hose clamp (a):
2.0 N·m (0.2 kg-m, 1.5 lb-ft)

Cylinder Head Cover Components

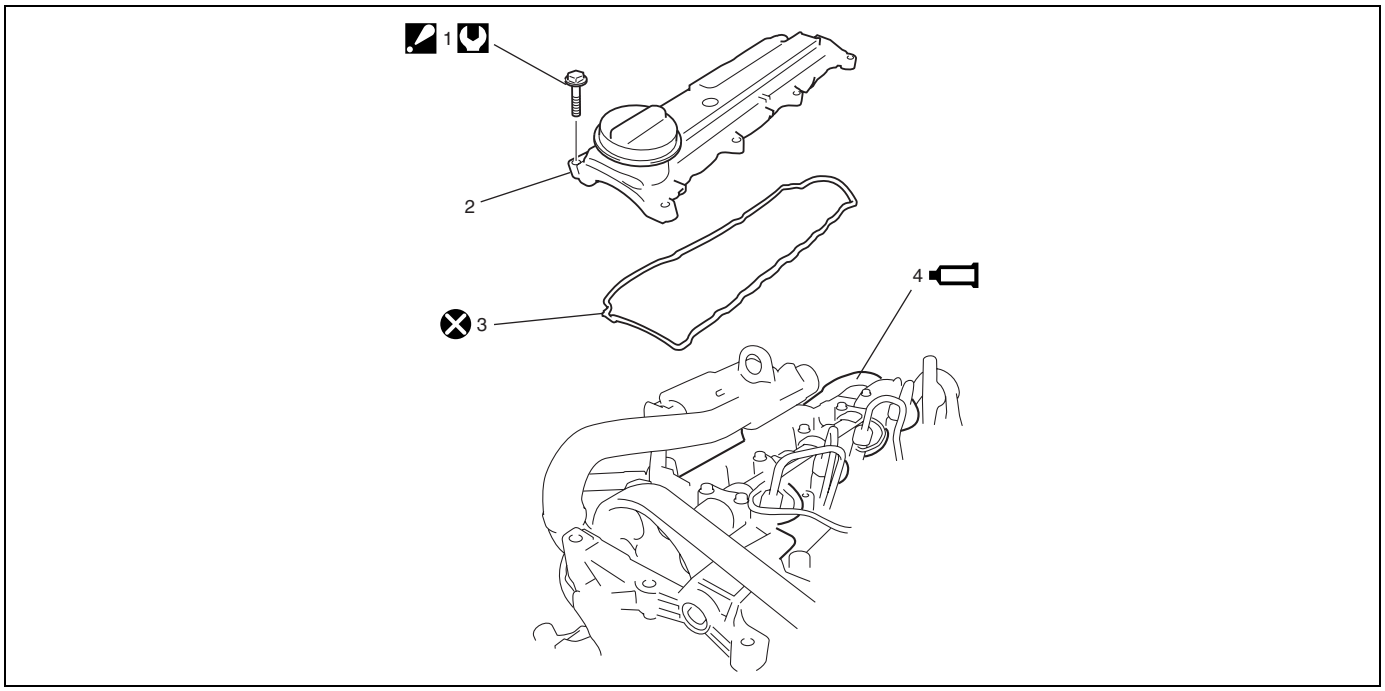

	1. Cylinder head cover bolt : Tighten 12 N·m (1.2 kg-m, 9.0 lb-ft) by the specified procedure.		3. Cylinder head cover gasket		Tightening torque
	2. Cylinder head cover		4. Cylinder head : Apply sealant Loctite 518® referring to “Installation” under “Cylinder Head Cover Removal and Installation”.		Do not reuse.

Cylinder Head Cover Removal and Installation

Removal

1) Disconnect negative (–) cable at battery.
2) Remove drive belt referring to “Generator Drive Belt Removal and Installation” in Section 6H2.

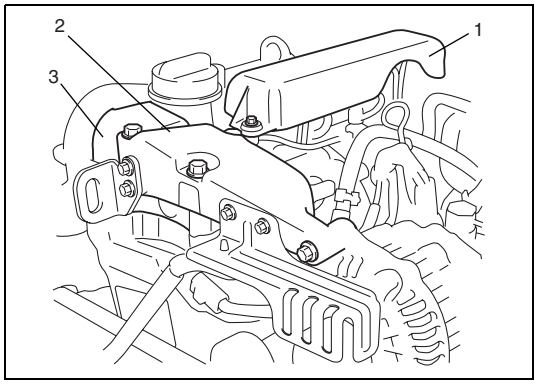

3) Remove injector cover (1), generator upper bracket (2), timing belt upper cover (3) and injector return hose cover .
4) Disconnect breather hose from cylinder head cover.

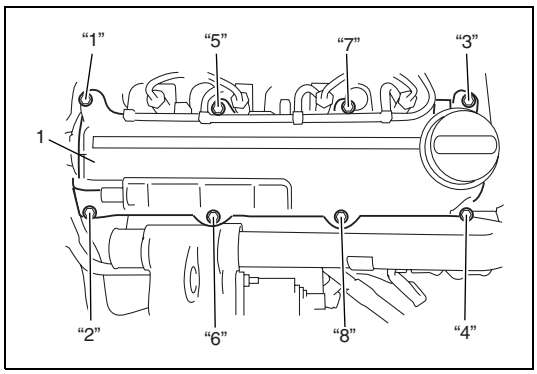

5) Loosen cylinder head cover bolts in such order ("1" to "8") as shown in the figure and remove them.
6) Remove cylinder head cover (1).

Installation

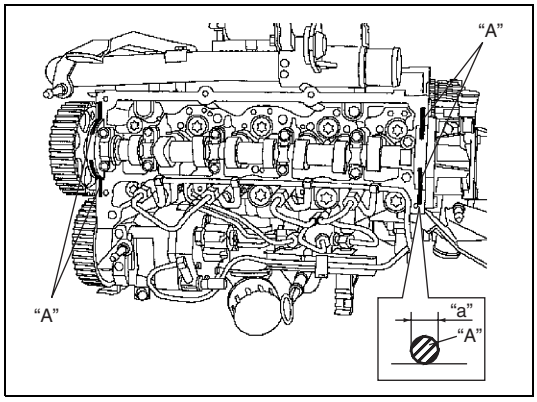

1) Remove oil, old sealant and dust from sealing surfaces. After cleaning, apply sealant "A" to cylinder head sealing surface area as shown in the figure.

"A": Loctite 518®

"a": 2 mm (0.08 in.)

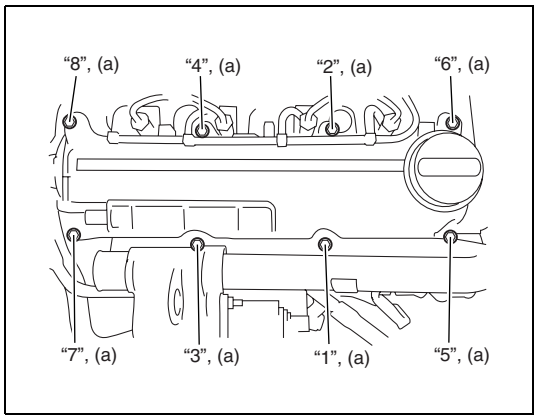

2) Install cylinder head cover to cylinder head as follows.
   a) Fit cylinder head cover to cylinder head with new gasket.
   b) Tighten cylinder head cover bolts temporarily by hand.
   c) Tighten cylinder head cover bolts specified torque by numerical order as shown in figure.

Tightening torque
Cylinder head cover bolt (a):
Tighten 12 N·m (1.2 kg-m, 9.0 lb-ft) by the specified procedure

3) Connect breather hose to cylinder head cover.

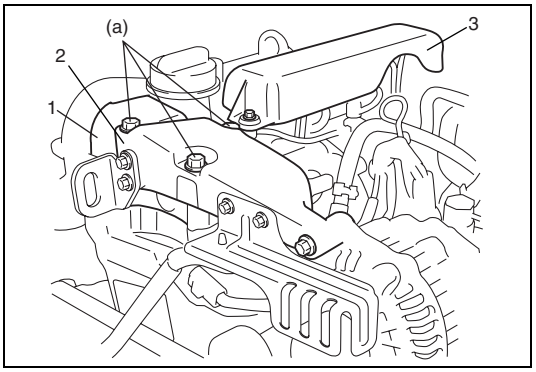

4) Install injector return hose cover, timing belt upper cover (1), generator upper bracket (2) and injector cover (3).

Tightening torque
Generator upper bracket bolt (a):
40 N·m (4.0 kg-m, 29.0 lb-ft)

5) Install drive belt referring to “Generator Drive Belt Removal and Installation” in Section 6H2.
6) Connect negative (–) cable at battery.

Oil Pressure Switch Removal and Installation

Removal

1) Detach degassing tank from its bracket.

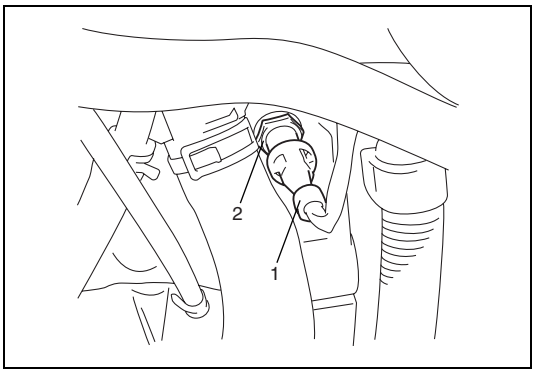

2) Disconnect oil pressure switch connector (1).
3) Remove oil pressure switch (2).

Installation

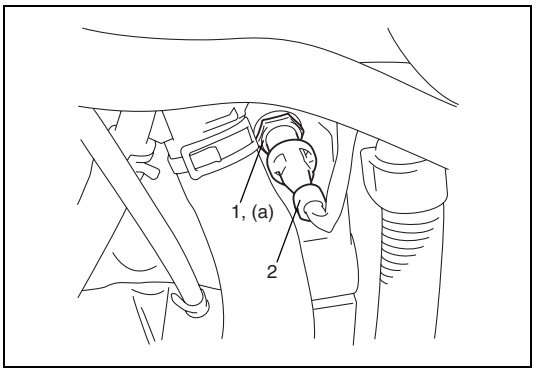

1) Install oil pressure switch (1) with new gasket.
2) Tighten oil pressure switch (1) to specified torque.

Tightening torque
Oil pressure switch (a): 25 N·m (2.5 kg-m, 18.0 lb-ft)

3) Connect oil pressure switch connector (2).
4) Install degassing tank to its bracket.
5) Start engine and check for oil leakage.

Heat Exchanger Removal and Installation

Removal

1) Drain engine coolant referring to “Coolant Replacement” in Section 6B2.
2) Detach degassing tank from its bracket.

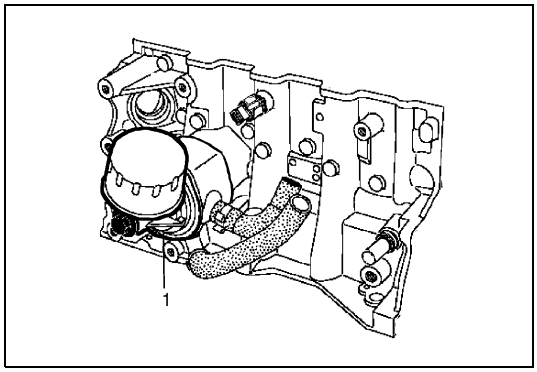

3) Remove oil filter unit bracket (1).

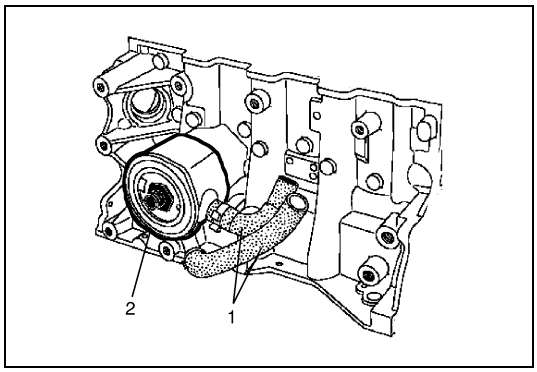

4) Disconnect heat exchanger hoses (1), and remove heat exchanger (2).

Installation

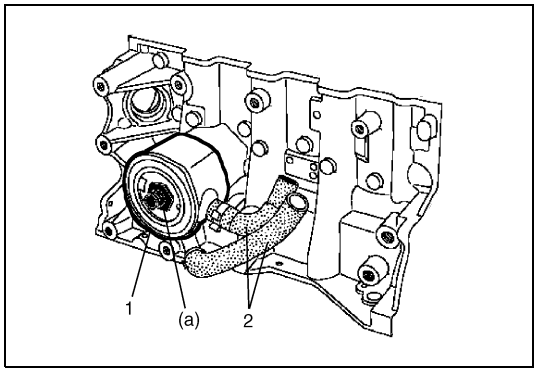

1) Install heat exchanger (1) with new gasket at specified position with which heat exchanger hoses (2) do not interfere in vacuum pump oil return hose and radiator outlet hose.

Tightening torque
Heat exchanger bolt (a): 45 N·m (4.5 kg-m, 32.5 lb-ft)

2) Connect heat exchanger hoses to heat exchanger.

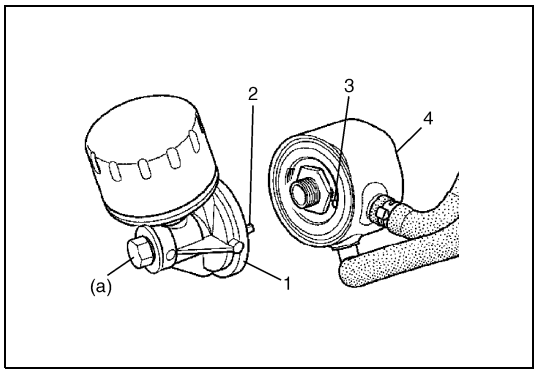

3) Install oil filter unit bracket (1) with new gasket.

NOTE:

Be sure to align lug (2) of oil filter unit bracket (1) with hole (3) of heat exchanger (4).

Tightening torque
Oil filter unit bracket bolt (a): 45 N·m (4.5 kg-m, 32.5 lb-ft)

4) Install degassing tank to its bracket.
5) Fill engine coolant referring to “Coolant Replacement” in section 6B2.
6) Check engine oil level referring to “Engine Oil and Filter” in Section 0B.
7) Check to make sure that there is no oil leakage and coolant leakage at each connection.

EGR Valve and Intake Pipe Components

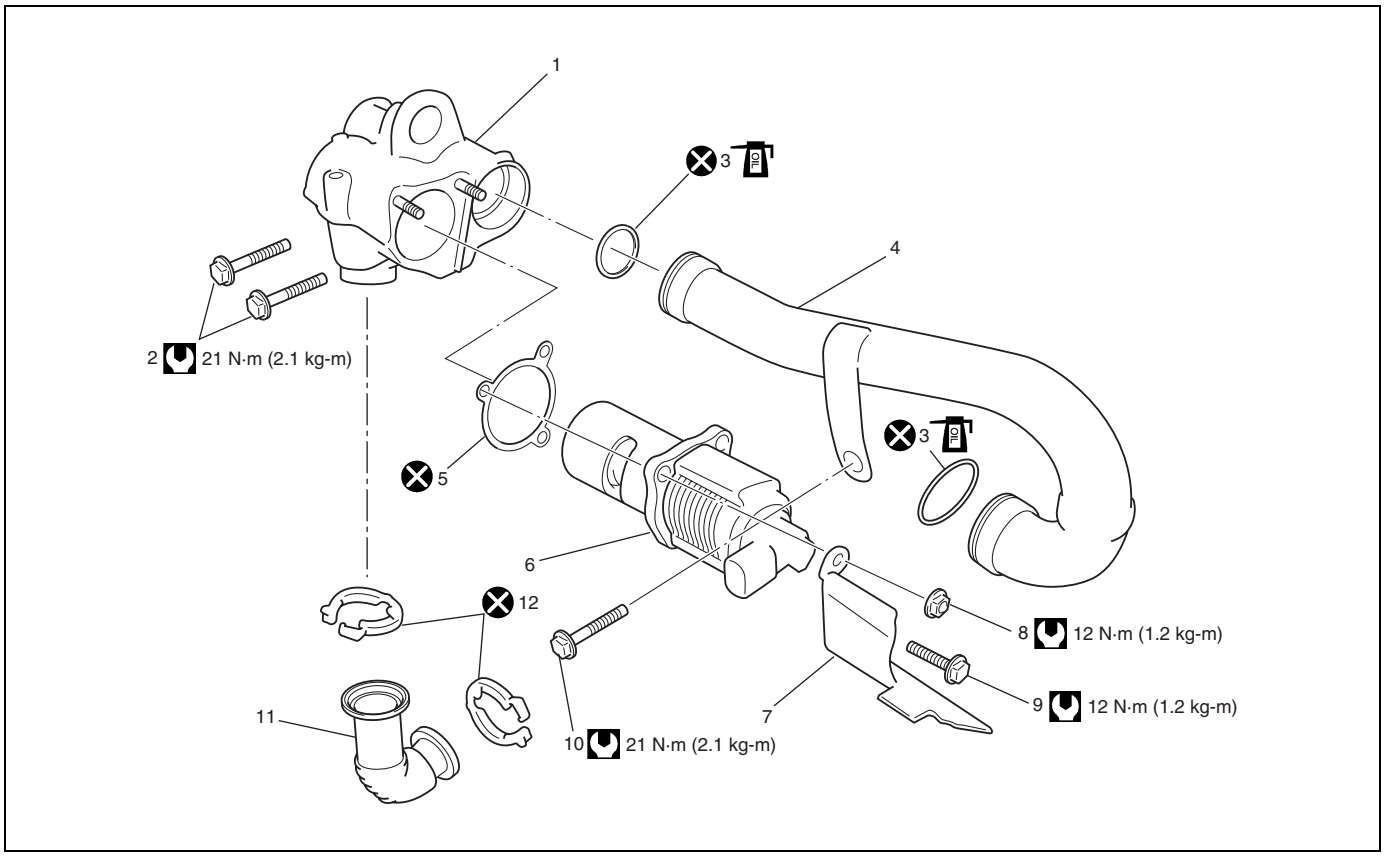

	1. EGR valve body	5. Gasket	9. EGR valve bolt	Tightening torque
	2. EGR valve body bolt	6. EGR valve	10. Intake pipe bolt	Do not reuse.
OIL	3. O-ring : Apply engine oil.	7. EGR valve heat shield	11. EGR pipe	
	4. Intake pipe	8. EGR valve nut	12. EGR pipe clamp	

EGR Valve and Intake Pipe Removal and Installation

Removal

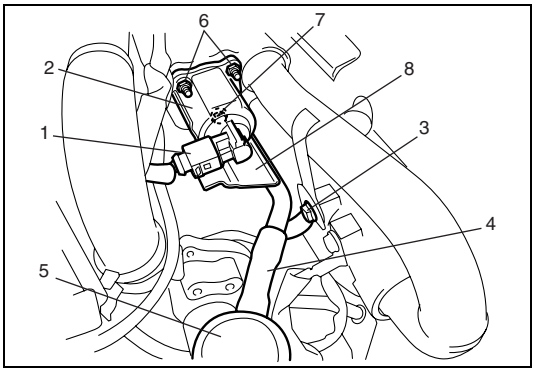

1) Disconnect negative (–) cable at battery.
2) Disconnect connector (1) from EGR valve (2).
3) Remove air intake pipe bolt (3).
4) Disconnect hose (4) from oil vapor recirculation valve (5).
5) Remove EGR valve nuts (6) and bolt (7).
6) Remove oil vapor pipe and heat shield (8) from EGR valve.
7) Remove EGR valve and its gasket from EGR unit.

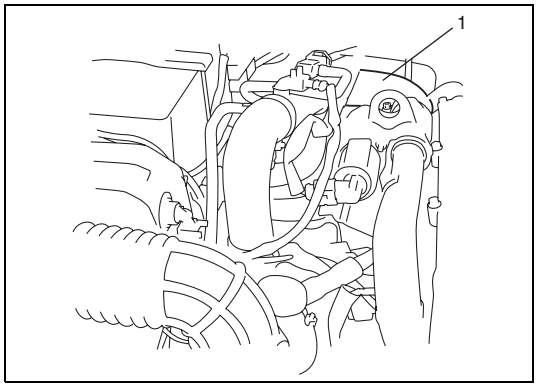

8) Remove turbocharger outlet hose No.2 (1).

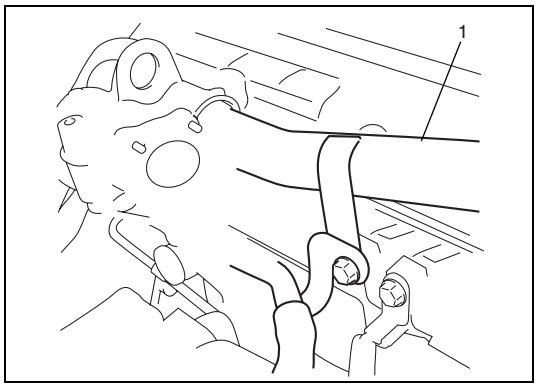

9) Remove intake pipe (1).

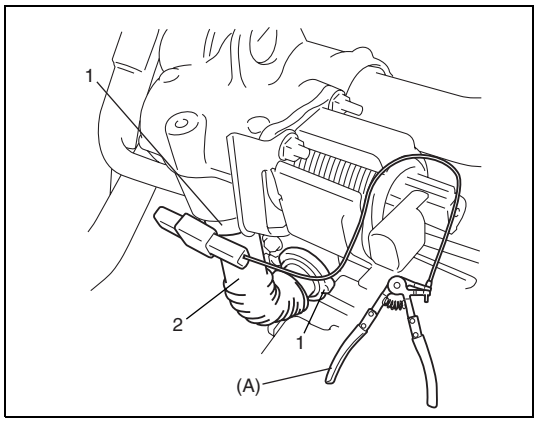

10) Remove EGR pipe after unclamping its clamp by special tool.

Special tool
(A): 09910-68110

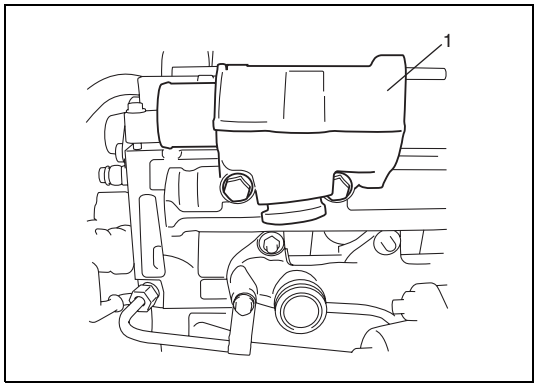

11) Remove EGR valve body (1) from cylinder head.

Installation

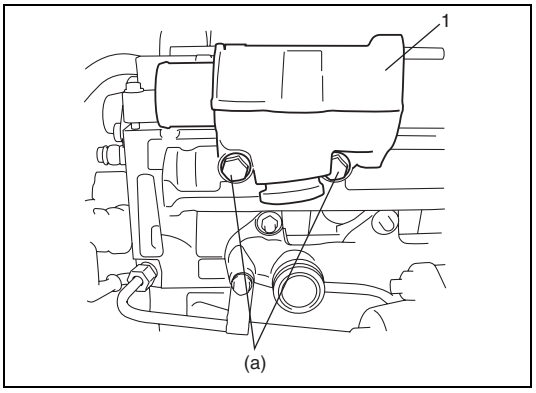

1) Install EGR valve body (1) to cylinder head.

Tightening torque
EGR valve body bolt (a):
21 N·m (2.1 kg-m, 15.5 lb-ft)

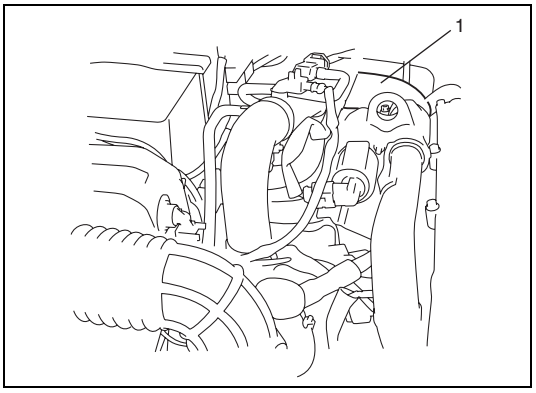

2) Install turbocharger outlet hose No2.

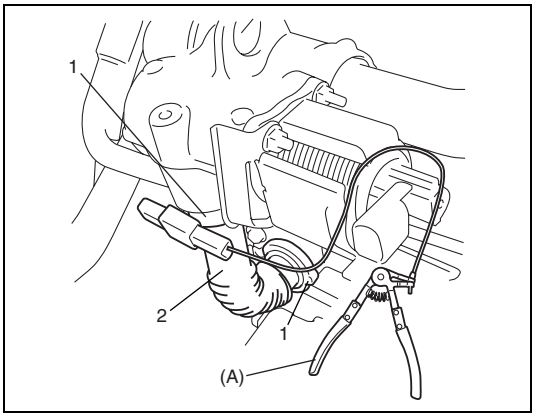

3) Install EGR pipe (2) clamping new clamp (1) by special tool.

Special tool
(A): 09910-68110

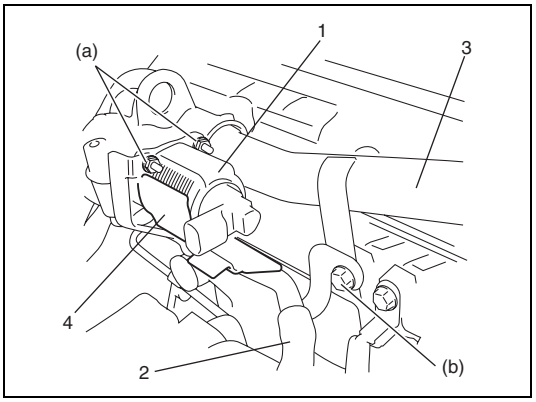

4) Connect hose (2) to oil vapor recirculation valve.
5) Apply engine oil to O-ring, and install EGR valve (1), EGR valve heat shield (4) and intake pipe (3) with new gasket and new O-ring.

Tightening torque
EGR valve bolt and nut (a):
12 N·m (1.2 kg-m, 9.0 lb-ft)
Intake pipe bolt (b): 21 N·m (2.1 kg-m, 15.5 lb-ft)

EGR Valve and Intake Pipe Inspection

EGR valve body

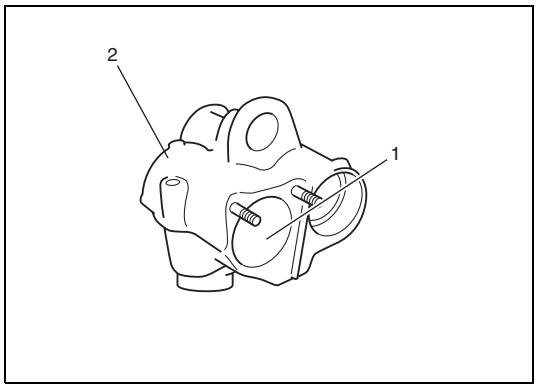

Check inside (1) of EGR valve body (2) for wear or damaged.

EGR stepper motor

Refer to “EGR Valve Inspection” in Section 6E2.

Turbocharger Components

WARNING:

To avoid danger of being burned, do not service exhaust system while it is still hot. Service should be performed after system cools down.

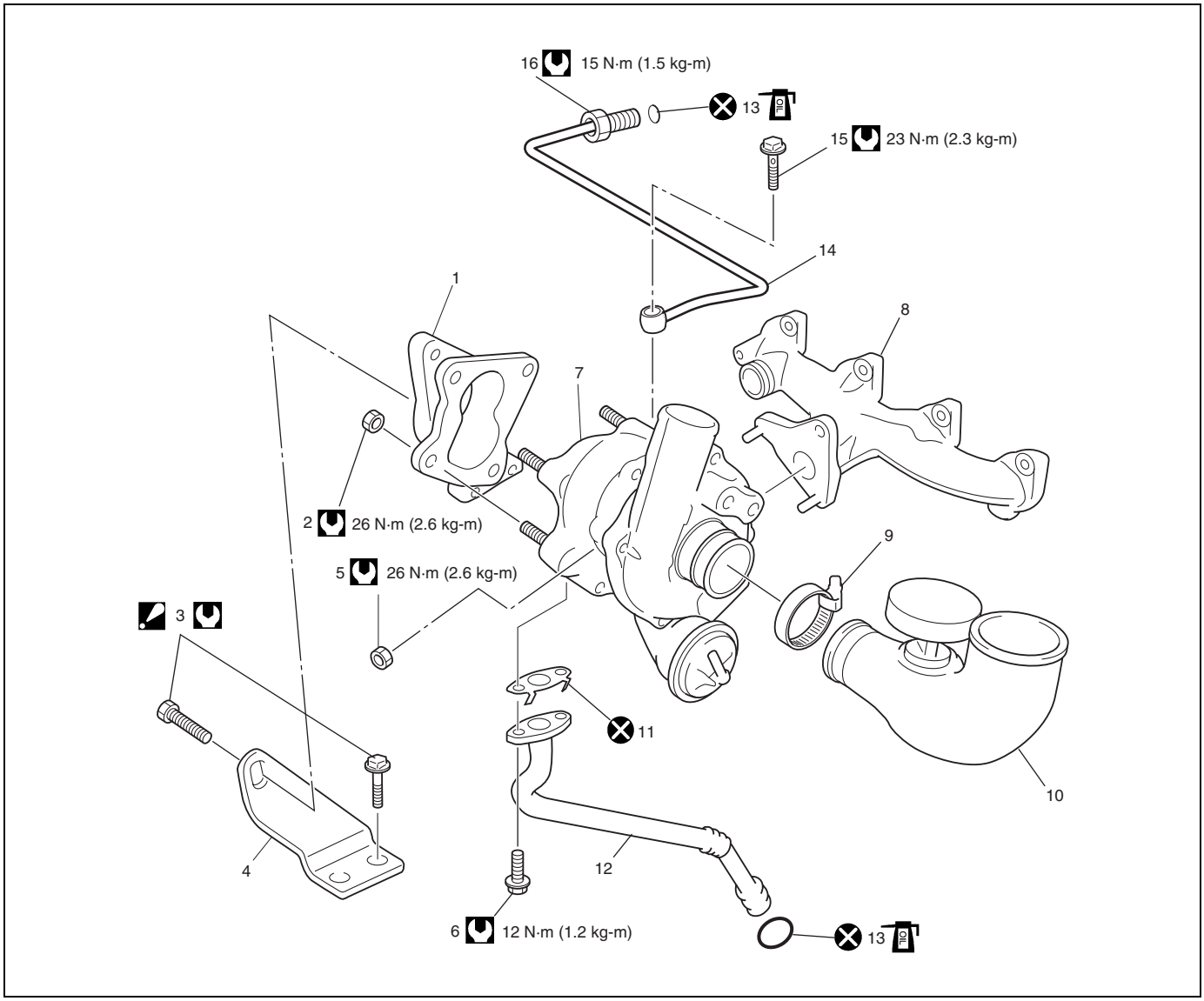

	1. Turbocharger outlet		7. Turbocharger		13. O-ring : Apply engine oil.
	2. Turbocharger outlet nut		8. Exhaust manifold		14. Lubrication pipe
	3. Turbocharger bracket bolt : Tighten 21 N·m (2.1 kg-m, 15.5 lb-ft) by the specified procedure.		9. Clamp		15. Lubrication pipe union bolt No.1
	4. Turbocharger bracket		10. Air cleaner outlet pipe		16. Lubrication pipe union bolt No.2
	5. Turbocharger nut		11. Gasket		Tightening torque
	6. Return pipe bolt		12. Turbocharger oil return pipe		Do not reuse.

Turbocharger Removal and Installation

WARNING:

To avoid danger of being burned, do not service exhaust system while it is still hot. Service should be performed after system cools down.

Removal

1) Disconnect negative (–) cable at battery.
2) Remove air cleaner assembly referring to “Air Cleaner Assembly Removal and Installation” in this section.

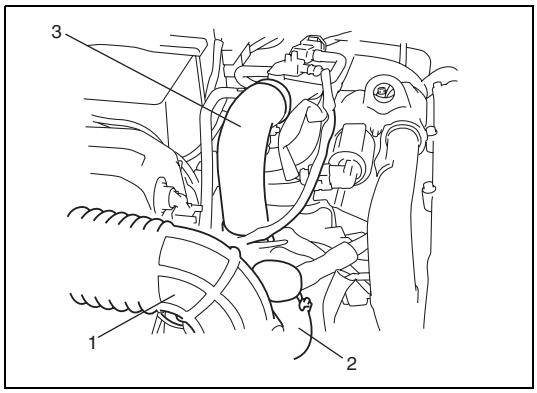

3) Remove air cleaner outlet pipe (1) and hose (2).
4) Remove turbocharger outlet hose No.1 (3) from turbocharger.
5) Remove exhaust pipe referring to “Exhaust System Components” in Section 6K2.

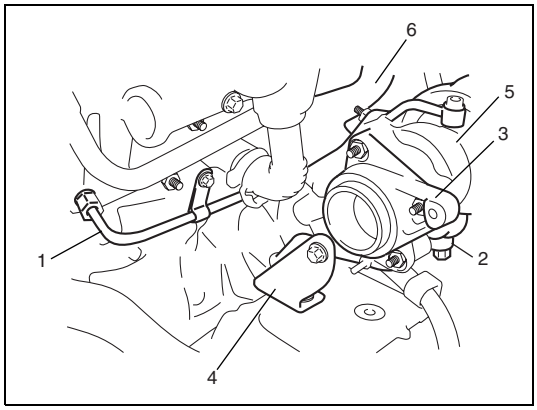

6) Remove lubrication pipe (1) and turbocharger oil return pipe (2).
7) Remove turbocharger outlet (3) and turbocharger bracket (4).
8) Remove turbocharger (5) from exhaust manifold (6).

Installation

1) Clean mating surfaces of turbocharger, catalytic converter and exhaust manifold.

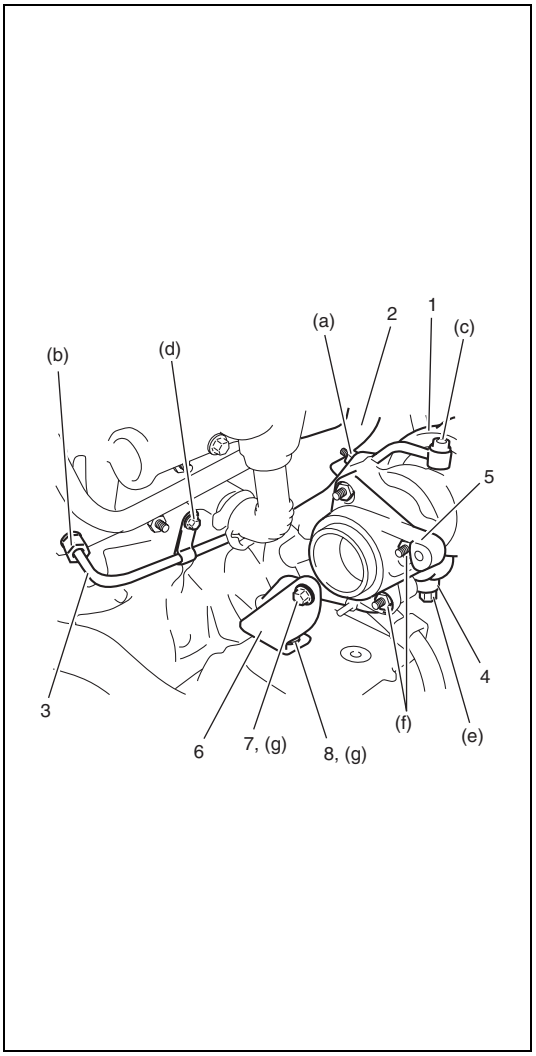

2) Install turbocharger (1) to exhaust manifold (2).

Tightening torque
Turbocharger nut (a): 26 N·m (2.6 kg-m, 19.0 lb-ft)

3) Apply engine oil to O-rings, and install lubrication pipe (3) and turbocharger oil return pipe (4) with new O-ring.

Tightening torque
Lubrication pipe union bolt No.2 (b):
23 N·m (2.3 kg-m, 17.0 lb-ft)
Lubrication pipe union bolt N0.1 (c):
15 N·m (1.5 kg-m, 11.0 lb-ft)
Lubrication pipe stiffener bolt (d):
12 N·m (1.2 kg-m, 9.0 lb-ft)
Turbocharger oil return pipe bolt (e):
12 N·m (1.2 kg-m, 9.0 lb-ft)

4) Install turbocharger outlet (5).

Tightening torque
Turbocharger outlet nut (f): 26 N·m (2.6 kg-m, 19.0 lb-ft)

5) Install turbocharger bracket (6) as follows.
   a) Temporarily tighten bracket bolt No.1 and No.2 (7 and 8).
   b) Tighten bracket bolt No.1 (7) first, and then tighten bracket bolt No.2 (8) to specified torque.

Tightening torque
Turbocharger bracket bolt (g):
Tighten 21 N·m (2.1kg-m, 15.5 lb-ft) by the specified procedure

6) Install exhaust pipe referring to “Exhaust System Components” in Section 6K2.

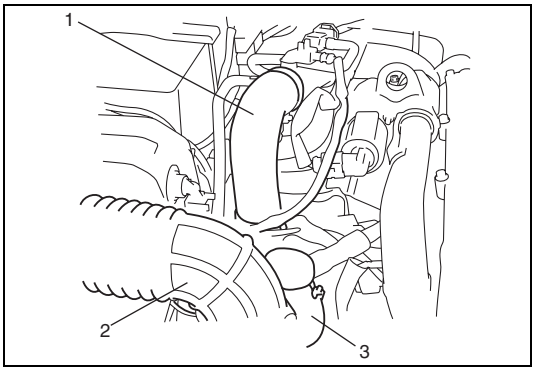

7) Install turbocharger outlet hose No.1 (1) to turbocharger.
8) Install air cleaner outlet hose (2) and pipe (3) to turbocharger.

Tightening torque
Air cleaner outlet hose clamp:
2.0 N·m (0.2 kg-m, 1.5 lb-ft)
Air cleaner outlet pipe clamp:
2.0 N·m (0.2 kg-m, 1.5 lb-ft)

9) Install air cleaner assembly referring to “Air Cleaner Assembly Removal and Installation” in this section.
10) Connect negative (–) cable at battery.
11) Using SUZUKI scan tool, cut fuel injection referring to “Operation Manual”.
12) Crank engine for 15 seconds in order to lubricate turbocharger.
13) Check to make sure that there is no oil leakage and exhaust gas leakage at each connection.

Turbocharger Inspection

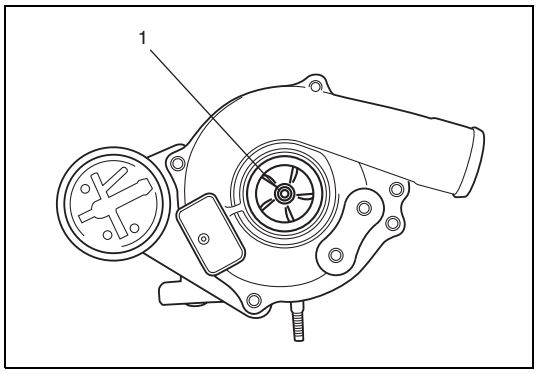

Rotate turbine shaft (1) by hand and verify that it turns smoothly without any abnormal noise and excessive runout.
If a malfunction is found, replace the turbocharger.

Exhaust Manifold Components

WARNING:
To avoid danger of being burned, do not service exhaust system while it is still hot. Service should be performed after system cools down.

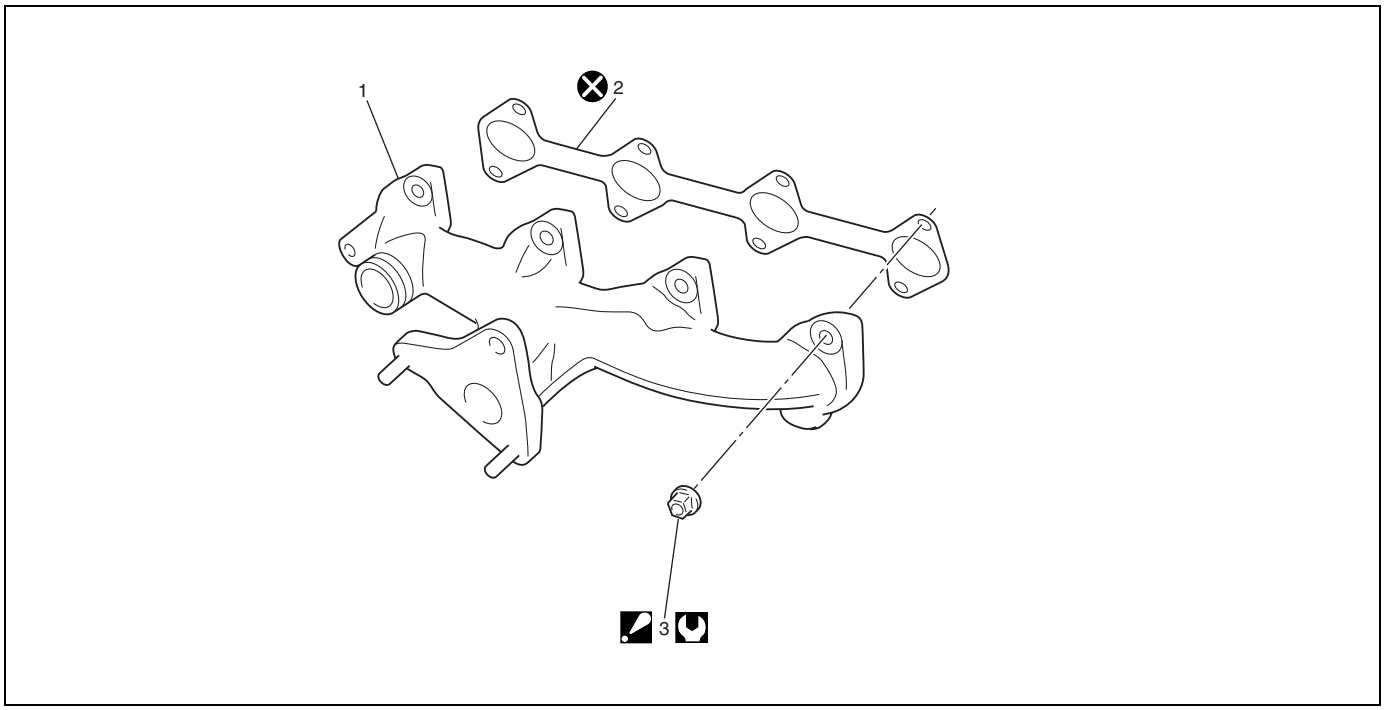

1. Exhaust manifold	3. Exhaust manifold nut : Tighten 26 N·m (2.6 kg-m, 19.0 lb-ft) by the specified procedure.	Do not reuse.
2. Exhaust manifold gasket	Tightening torque	

Exhaust Manifold Removal and Installation

WARNING:
To avoid danger of being burned, do not service exhaust system while it is still hot. Service should be performed after system cools down.

Removal

1) Disconnect negative (–) cable at battery.
2) Remove turbocharger assembly referring to “Turbocharger Removal and Installation” in this section.
3) Remove EGR pipe referring to “EGR Valve and Intake Pipe” in this section.

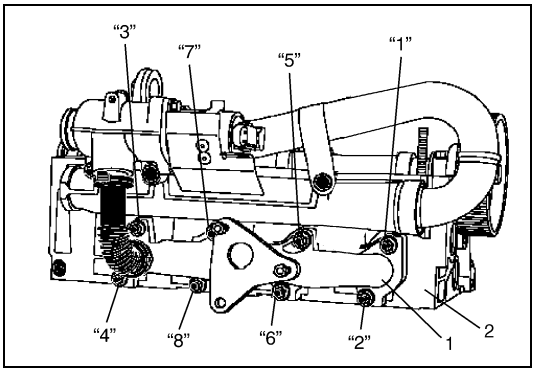

4) Loosen exhaust manifold nuts in numerical order (“1” to “8”) evenly as indicated in the figure, and remove them.
5) Remove exhaust manifold (1) from cylinder head (2).

Installation

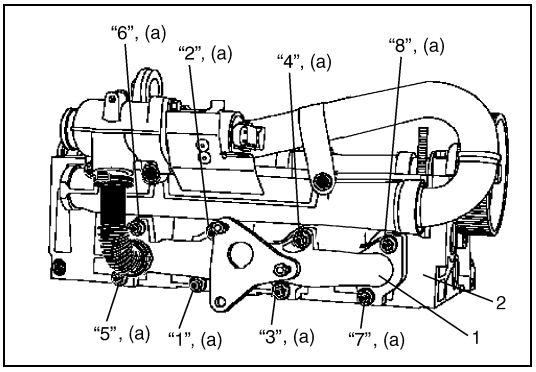

1) Install exhaust manifold (1) to cylinder head (2) as follows.
   a) Fit exhaust manifold to cylinder head with new gasket.
   b) Tighten exhaust manifold nuts temporarily by hand.
   c) Tighten exhaust manifold nuts specified torque by numerical order as shown in figure.

Tightening torque
Exhaust manifold nut (a):
Tighten 26 N·m (2.6 kg-m, 19.0 lb-ft) by the specified procedure

2) Install EGR pipe referring to “EGR Valve and Intake Pipe Removal and Installation” in this section.
3) Install turbocharger assembly referring to “Turbocharger Removal and Installation” in this section.
4) Connect negative (–) cable at battery.
5) Check to make sure that there is no oil leakage and exhaust gas leakage at each connection.

Oil Pan and Oil Pump Strainer Components

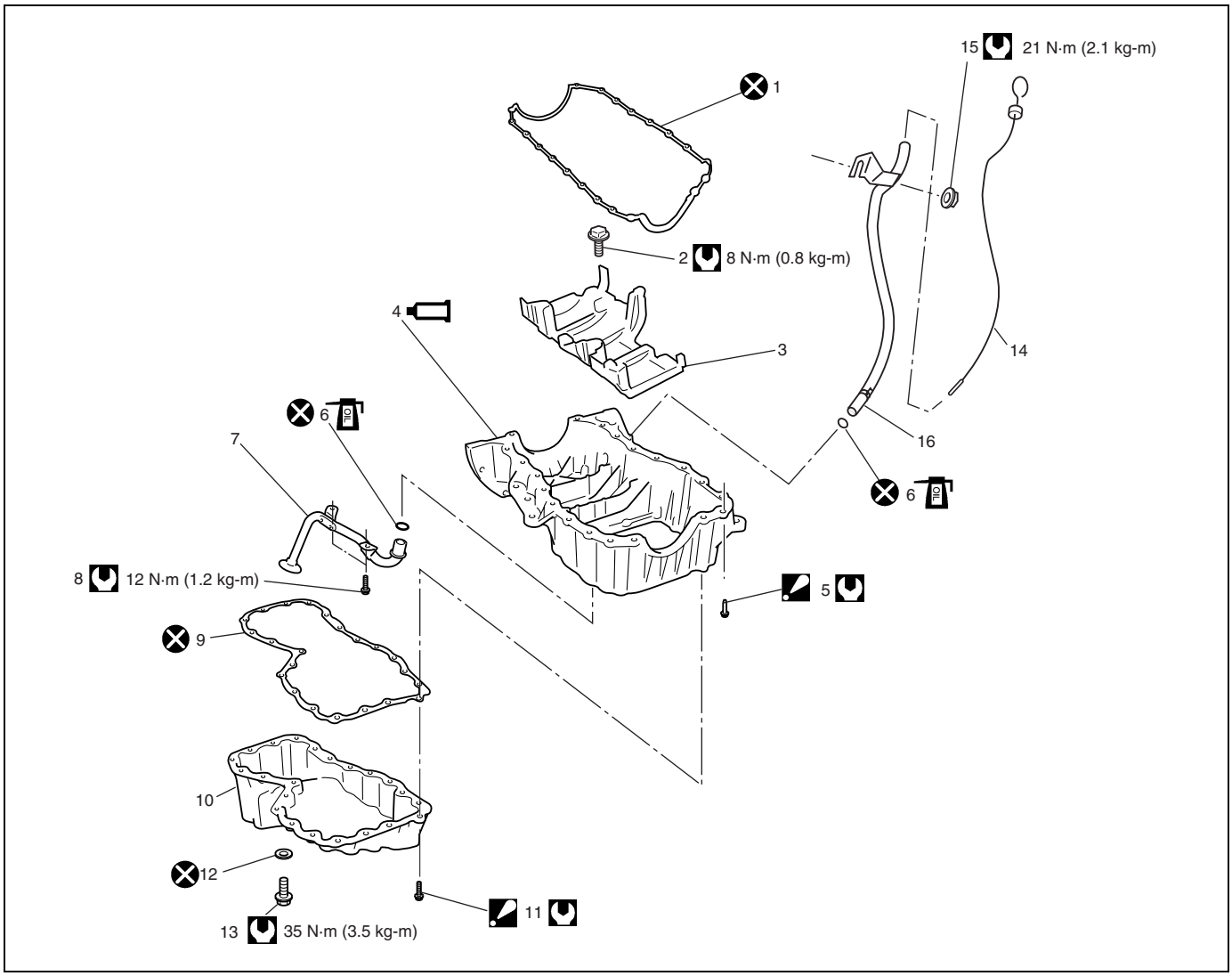

	1. Upper oil pan gasket		8. Oil pump strainer bolt		15. Level gage tube nut
	2. Oil pan baffle plate bolt		9. Lower oil pan gasket		16. Level gage tube
	3. Oil pan baffle plate		10. Lower oil pan		Tightening torque
	4. Upper oil pan : Apply sealant RHODORSEAL 5661® referring to “Installation” under “Oil Pan and Oil Pump Strainer Removal and Installation”.		11. Lower oil pan bolt : Tighten 12 N·m (1.2 kg-m, 9.0 lb-ft) by the specified procedure.		Do not reuse.
	5. Upper oil pan bolt : Tighten 6 N·m (0.6 kg-m, 4.5 lb-ft) and 16 N·m (1.6 kg-m, 12.0 lb-ft) by the specified procedure.		12. Engine oil drain plug gasket		
	6. O-ring : Apply engine oil.		13. Engine oil drain plug		
	7. Oil pump strainer		14. Level gauge		

Oil Pan and Oil Pump Strainer Removal and Installation

Removal

1) Disconnect negative (–) cable at battery.
2) Drain engine oil referring to “Engine Oil and Filter Change” in Section 0B.
3) Remove engine hood after disconnecting windshield washer hose.
4) Remove oil level gauge.
5) Remove clutch operating cylinder referring to “Transmission Dismounting and Remounting” in Section 7A2.

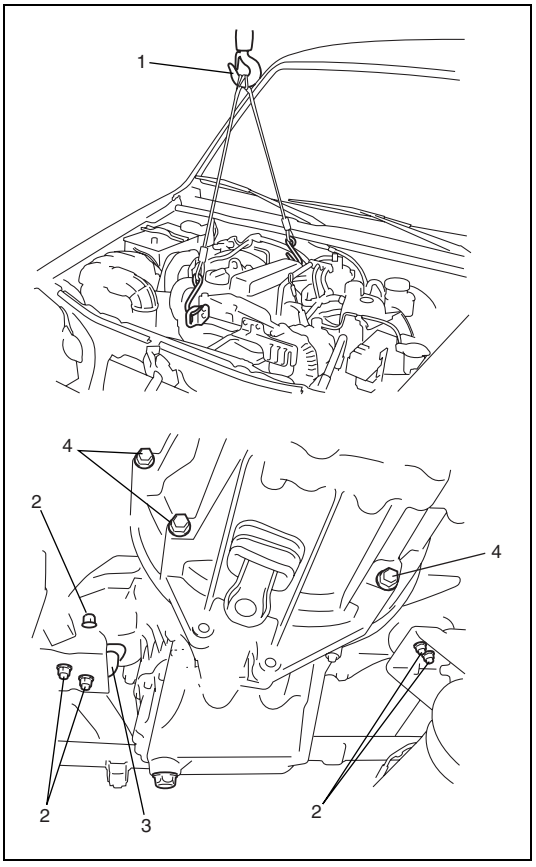

6) To facilitate and ensure removal of oil pan, increase clearance between engine and vehicle body according to the following procedures.
   a) Install lifting device (1).
   b) Remove engine mounting nuts (2).
   c) Hoist engine 15 – 20 mm (0.6 – 0.8 in.).

CAUTION:

Do not hoist engine more than instructed above. That may cause trouble to engine or transmission.

   d) Remove engine left mounting (3).
7) Remove transmission to engine bolts (4).

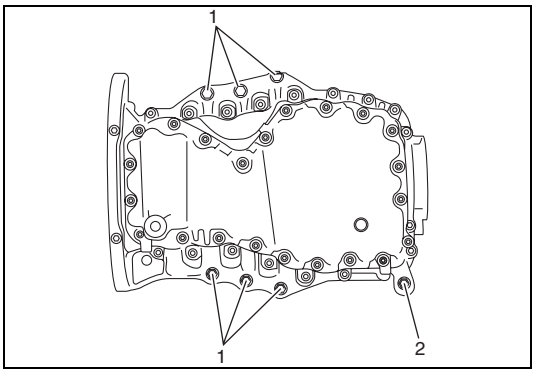

8) Remove engine mounting bracket bolts (1).
9) Remove accessory bracket bolt (2).

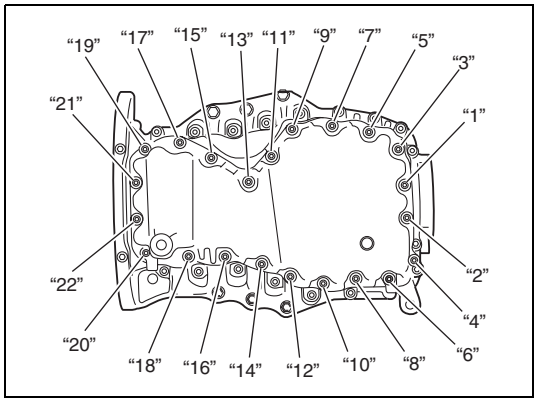

10) Loosen lower oil pan bolts in numerical order ("1" to "22") as shown in figure, and remove them.
11) Remove lower oil pan from upper oil pan.

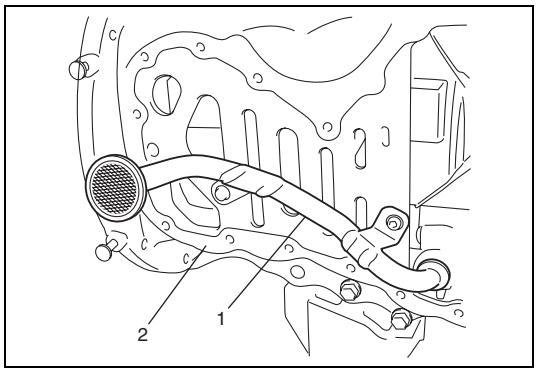

12) Remove oil pump strainer (1) from upper oil pan (2).

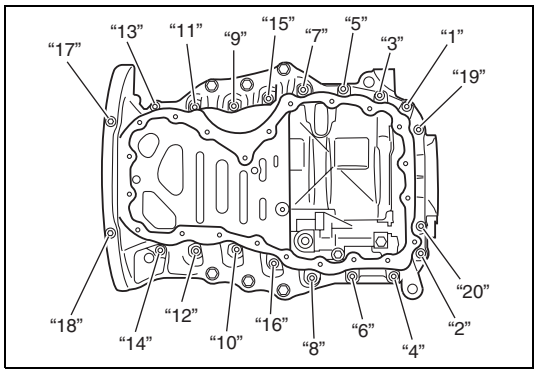

13) Loosen upper oil pan bolts in numerical order ("1" to "20") as shown in figure, and remove them.
14) Remove upper oil pan from cylinder block.

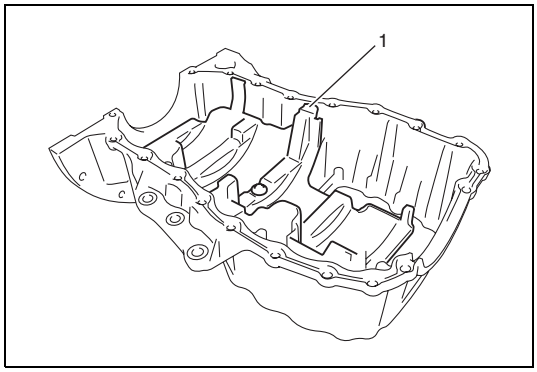

15) Remove oil pan baffle plate (1) from upper oil pan.

Installation

1) Clean sealing surfaces on cylinder block, upper oil pan and lower oil pan.

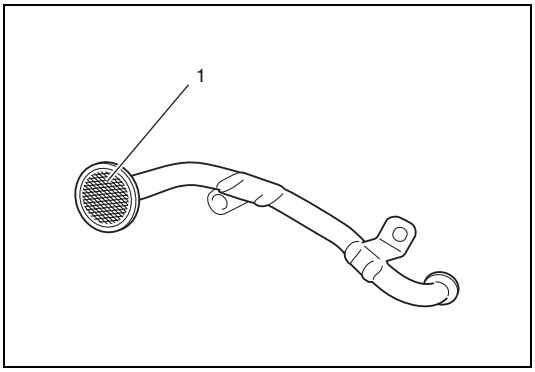

2) Clean Inside of oil pan and oil pump strainer screen (1).

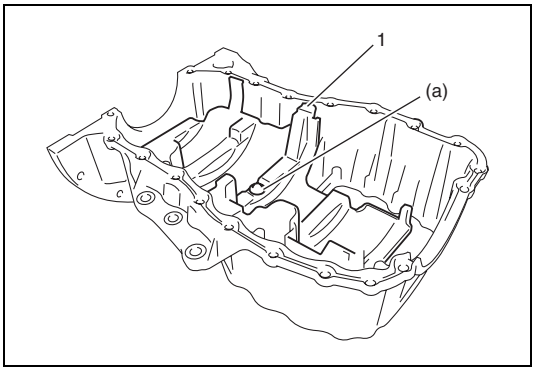

3) Install oil pan baffle plate to upper oil pan.

Tightening torque
Oil pan baffle plate bolt (a): 8 N·m (0.8 kg-m, 6.0 lb-ft)

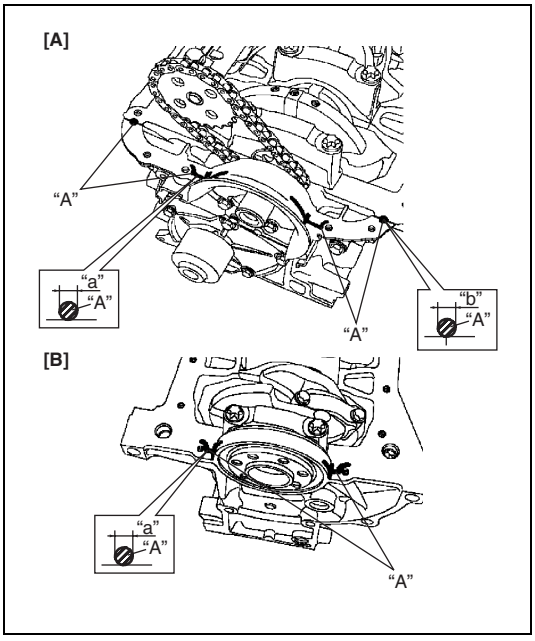

4) Apply sealant "A" to cylinder block and gasket holder sealing surface area as shown in the figure.

"A": RHODORSEAL 5661®

[A]:	Crankshaft pulley side
[B]:	Flywheel side
"a":	5 mm (0.20 in.)
"b":	7 mm (0.27 in.)

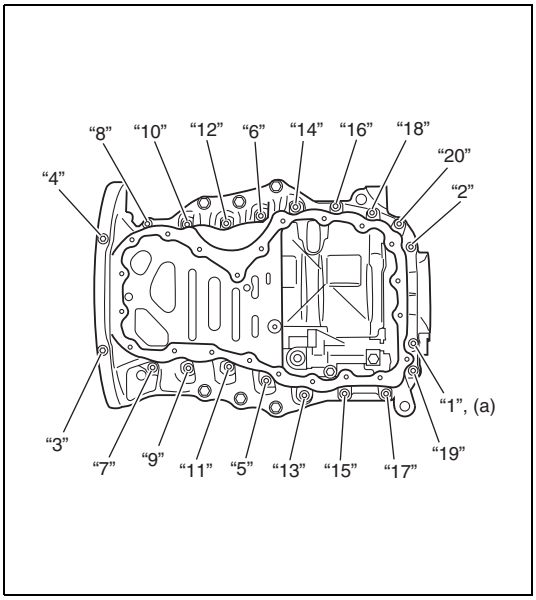

5) Install upper oil pan to cylinder block as follows.
   a) Fit upper oil pan to cylinder block with new gasket.
   b) Tighten upper oil pan bolts temporarily by hand.
   c) Tighten upper oil pan bolts ("1" to "8") to 6 N·m (0.6 kg-m, 4.5 lb-ft) according to numerical order in figure.
   d) Tighten upper oil pan bolts ("1" to "8") to 16 N·m (1.6 kg-m, 12.0 lb-ft) by numerical order as shown in figure.
   e) Tighten upper oil pan bolts ("9" to "20") to 6 N·m (0.6 kg-m, 4.5 lb-ft) according to numerical order in figure.
   f) Tighten upper oil pan bolts ("9" to "20") to 16 N·m (1.6 kg-m, 12.0 lb-ft) by numerical order as shown in figure.

Tightening torque
Upper oil pan bolt (a):
Tighten 6 N·m (0.6 kg-m, 4.5 lb-ft) and 16 N·m (1.6 kg-m, 12.0 lb-ft) by the specified procedure

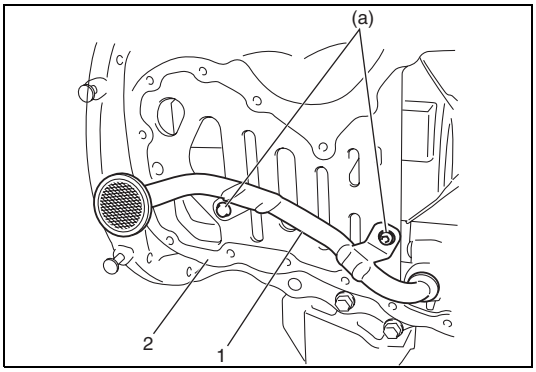

6) Apply engine oil to O-ring, and install oil pump strainer (1) to upper oil pan (2) with new O-ring.

Tightening torque
Oil pump strainer bolt (a): 12 N·m (1.2 kg-m, 9.0 lb-ft)

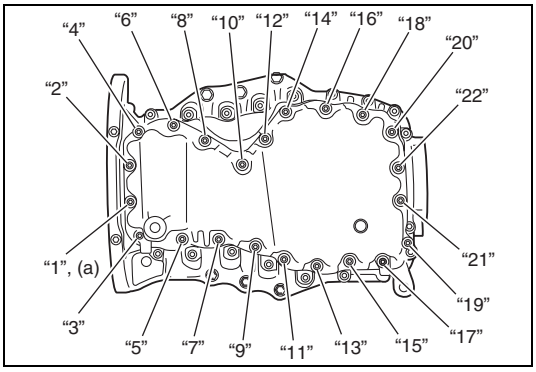

7) Install lower oil pan to upper oil pan as follows.
   a) Fit lower oil pan (1) to upper oil pan.
   b) Tighten lower oil pan bolts temporarily by hand.
   c) Tighten lower oil pan bolts to specified torque by numerical order as shown in figure.

Tightening torque
Lower oil pan bolt (a):
Tighten12 N·m (1.2 kg-m, 9.0 lb-ft) by the specified procedure

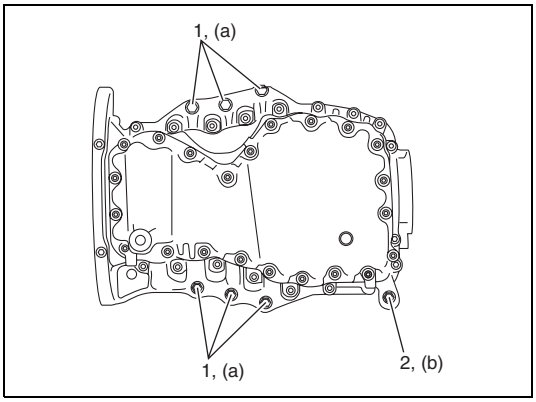

8) Install engine mounting bracket bolts (1).

Tightening torque
Engine mounting bracket bolt (a):
40 N·m (4.0 kg-m, 29.0 lb-ft)

9) Install accessory bracket bolt (2).

Tightening torque
Accessory bracket bolt (b):
28 N·m (2.8 kg-m, 20.5 lb-ft)

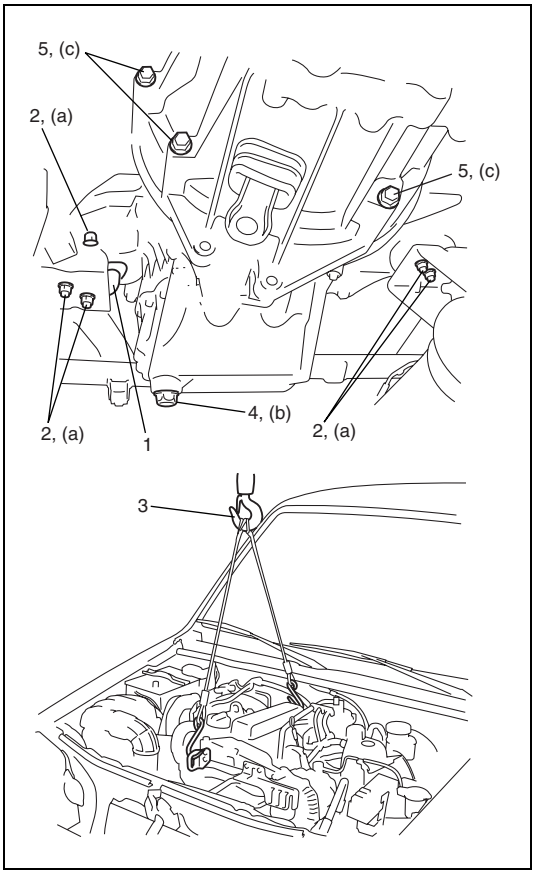

10) Install engine to vehicle as follows.
    a) Install engine left mounting (1).
    b) Lower engine.
    c) Tighten engine mounting nuts (2) to specified torque.

    Tightening torque
    Engine mounting nut (a):
    55 N·m (5.5 kg-m, 40.0 lb-ft)

    d) Remove lifting device (3).
11) Install drain plug (4) to oil pan with new gasket.

    Tightening torque
    Engine oil drain plug (b): 35 N·m (3.5 kg-m, 25.5 lb-ft)

12) Install transmission to engine bolts (5).

    Tightening torque
    Transmission to engine bolt (c):
    55 N·m (5.5 kg-m, 40.0 lb-ft)

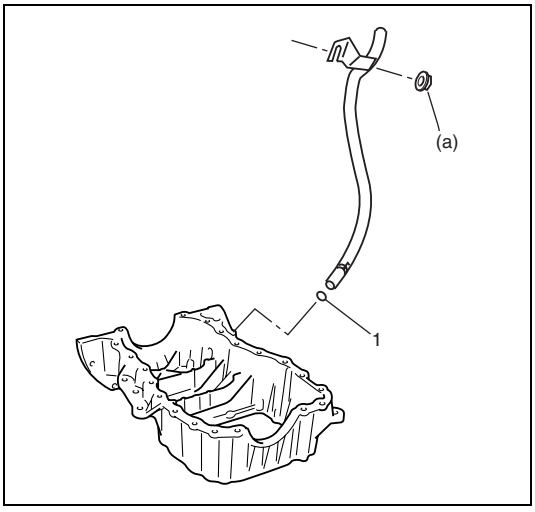

13) Apply engine oil to O-ring (1), and install oil level gauge with new O-ring.

    Tightening torque
    Oil level gauge nut (a): 21 N·m (2.1 kg-m, 15.5 lb-ft)

14) Install clutch operating cylinder referring to “Clutch Operating Cylinder Removal and Installation” in Section 7C2.
15) Refill engine oil referring to “Engine Oil and Filter” in Section 0B.
16) Connect negative (–) cable at battery.
17) Check to make sure that there is no oil leakage at each connection.

Engine Assembly Removal and Installation

Removal

1) Disconnect positive (+) and negative (–) cable at battery.
2) Remove engine hood after disconnecting windshield washer hose.
3) Remove air cleaner hose and pipe.
4) Remove radiator referring to “Radiator Removal and Installation” in Section 6B2.
5) Detach main fuse/relay box from its bracket.
6) Drain engine coolant referring to “Coolant Replacement” in section 6B2.

7) Remove degassing tank referring to “Radiator Removal and Installation” in Section 6B2.
8) Remove fuel filter referring to “Fuel Filter Removal and Installation” in Section 6C2.
9) Disconnect discharge hose pipe from A/C compressor referring to “Major Components and Location” in section 1B.
10) Remove transmission referring to “Transmission Dismounting and Remounting” in Section 7A2.
11) Remove starting motor referring to “Starting Motor Dismounting and Remounting” in Section 6G2.

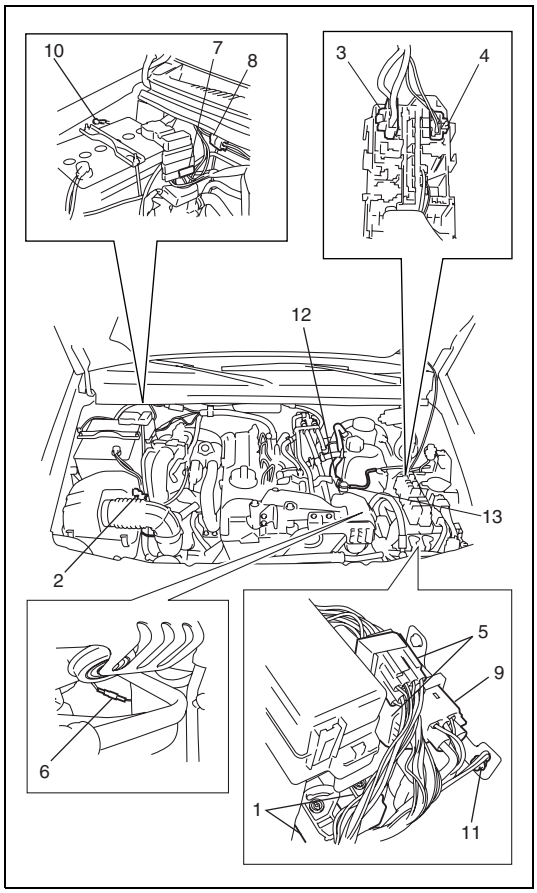

12) Disconnect the following electric wires, and then release wire harnesses from clamps.
    - ECM connectors (1)
    - IAT sensor No.1 connector (2)
    - Main fuse box connectors (3 and 4)
    - Engine harness to main harness connector (5)
    - Magnet clutch connector (6) of A/C compressor
    - Supplementary fuse box connector (7)
    - Battery to main harness connector (8)
    - Pre-heating unit connector (9)
    - Ground terminal (10 and 11)
13) Disconnect the following hoses.
    - Brake booster hose (12) and air lock hub hose (13) from vacuum pump
    - Heater inlet hose No. 1 from thermo plunger
    - Radiator upper hose from thermostat assembly
    - Heater outlet hose from heater core
14) With hose connected, detach power steering pump from its bracket.
15) Drain engine oil, if necessary.

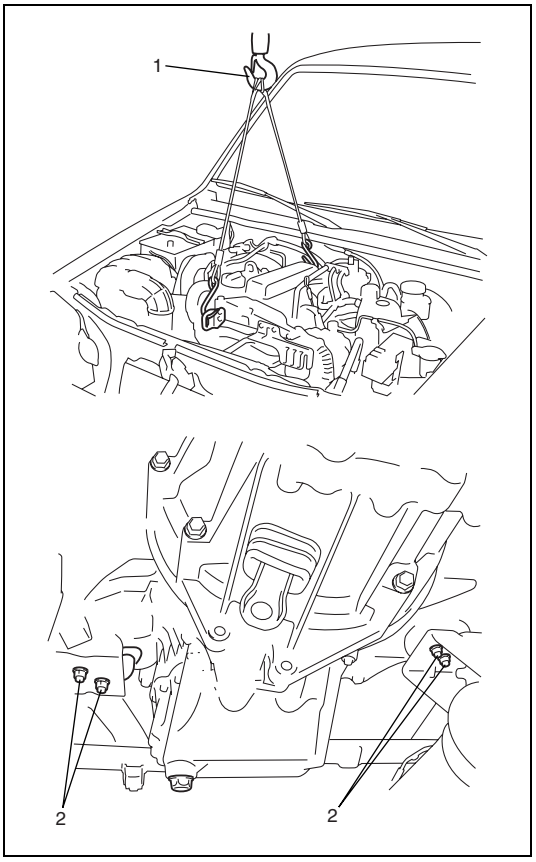

16) Install lifting device (1).
17) Remove engine mounting nuts (2).
18) Before lifting engine, check to ensure all hoses, electric wires and cables are disconnected from engine.
19) Remove engine assembly from vehicle.

Installation

CAUTION:
Before installing intake air pressure sensor hose, degrease connect part of hose and intercooler outlet hose. Otherwise hose may become detached and cause turbo system failure.

Reverse removal procedure for installation noting the following.

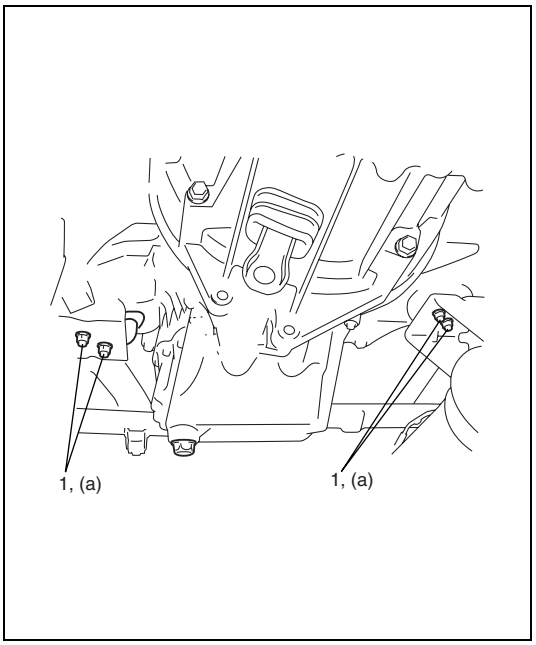

- Tighten engine mounting nuts (1) to specified torque.

Tightening torque
Engine mounting nut (a):
55 N·m (5.5 kg-m, 40.0 lb-ft)

- Install transmission assembly referring to “Transmission Dismounting and Remounting” in Section 7A2.
- Check to ensure that all removed parts are back in place. Reinstall any necessary parts which have not been reinstalled.
- Refill engine oil referring to “Engine Oil and Filter” in Section 0B.
- Refill cooling system referring to “Coolant Replacement” in Section 6B2.
- After connecting discharge hose pipe to A/C compressor, charge A/C system referring to “Charging Procedure” in Section 1B.

- Check to make sure that there is no fuel leakage, oil leakage, coolant leakage, refrigerant and exhaust gas leakage at each connection.

Timing Belt and Belt Tensioner Components

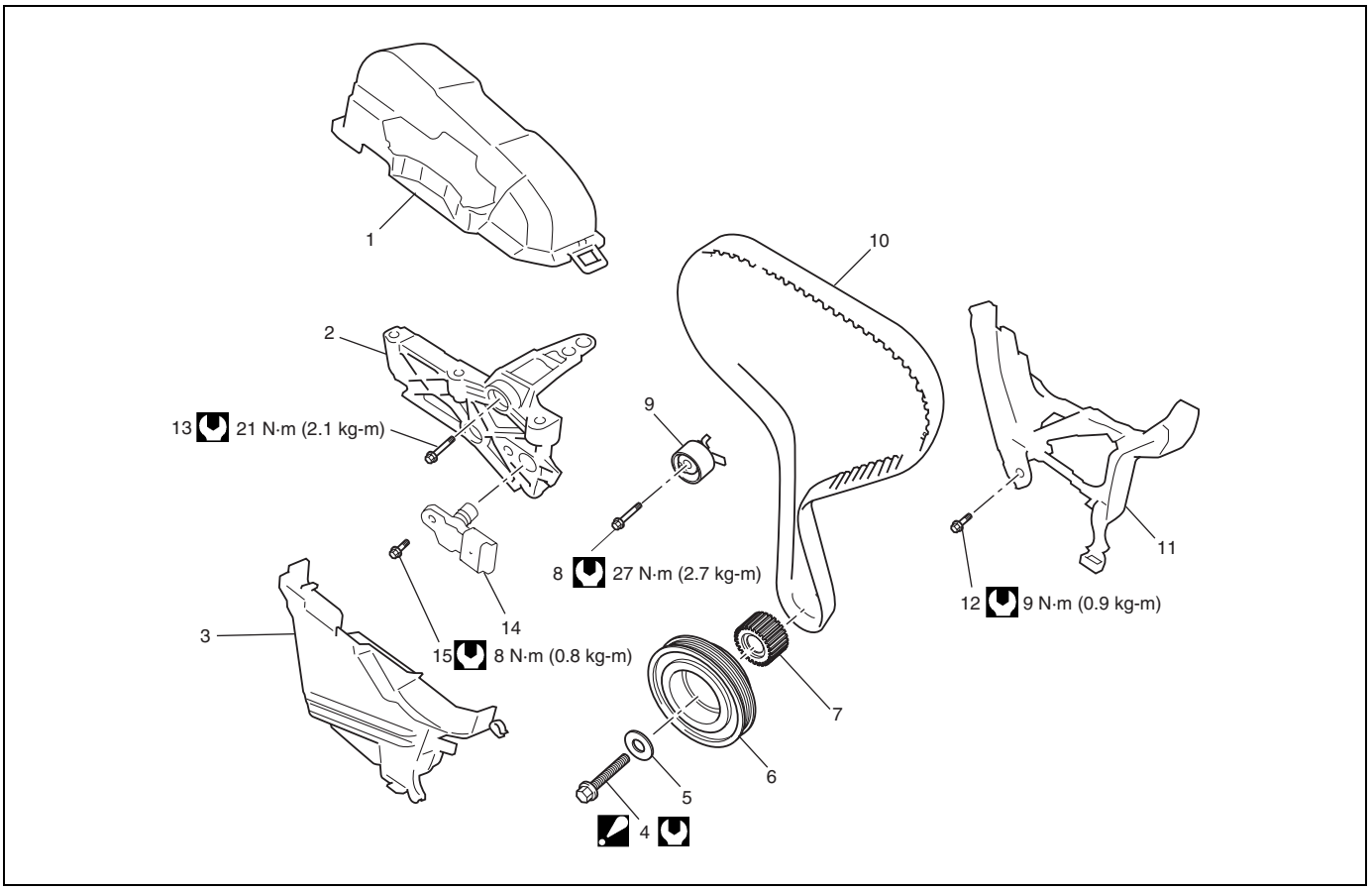

	1.	Timing belt upper cover	7.	Crankshaft pulley	13. Generator upper bracket support bolt
	2.	Generator upper bracket support	8.	Timing belt tensioner bolt	14. CMP sensor
	3.	Timing belt lower cover	9.	Timing belt tensioner	15. CMP sensor bolt
◢	4.	Crankshaft pulley bolt : Tighten 120 N·m (12.0 kg-m, 87.0 lb-ft) and 95° by the specified procedure.	10.	Timing belt	Tightening torque
	5.	Washer	11.	Timing belt inner cover	
	6.	Crankshaft pulley	12.	Timing belt inner cover bolt	

Timing Belt and Belt Tensioner Removal and Installation

Removal

1) Remove engine assembly from vehicle referring to “Engine Assembly Removal and Installation” in this section.

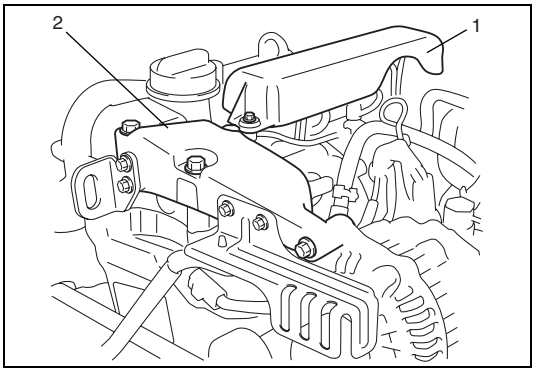

2) Remove injector cover (1) and generator upper bracket (2).

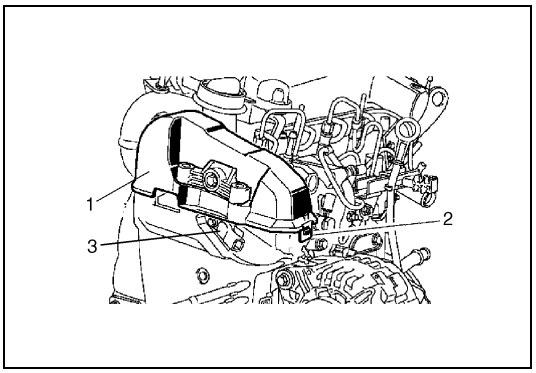

3) Remove timing belt upper cover (1) after unhooking its tabs (2).
4) Remove CMP sensor (3).

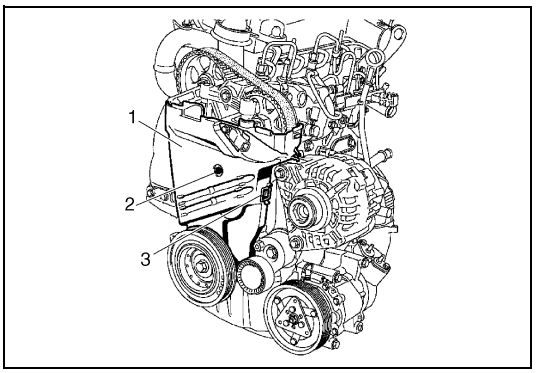

5) Remove timing belt lower cover (1) after unhooking its tabs (3) and removing its plastic bolt (2).

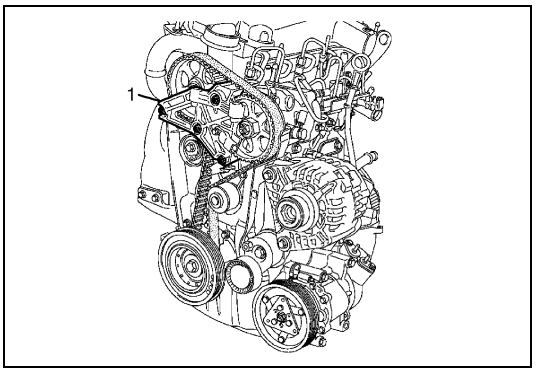

6) Remove generator upper bracket support (1) from cylinder head.

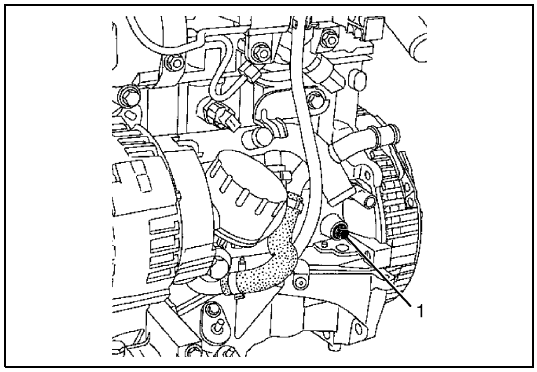

7) Remove TDC pin cap (1).

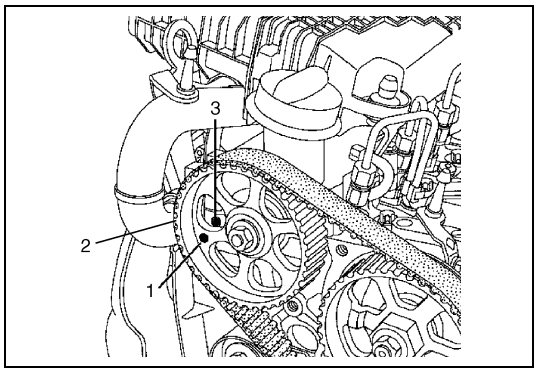

8) Turn crankshaft pulley clockwise, and stop it just before aligning hole (1) of camshaft timing belt pulley (2) matches with hole (3) of cylinder head.

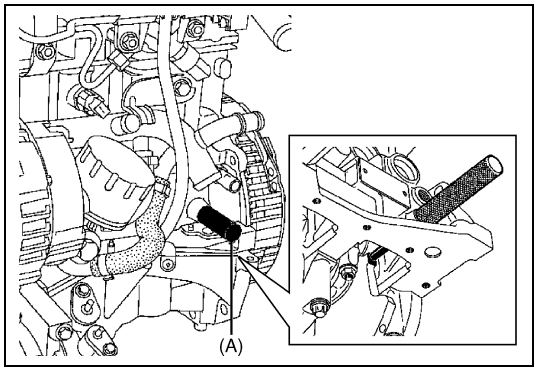

9) Insert special tool (A) into TDC pin hole as shown in figure.

Special tool
(A): 09919-58110

10) Turn crankshaft pulley clockwise until crankshaft touches special tool (A).

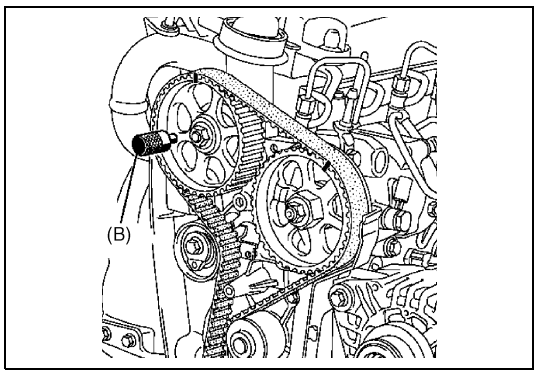

11) Check that special tool (B) inserts holes of timing belt pulley and cylinder head smoothly.

Special tool
(B): 09919-58120

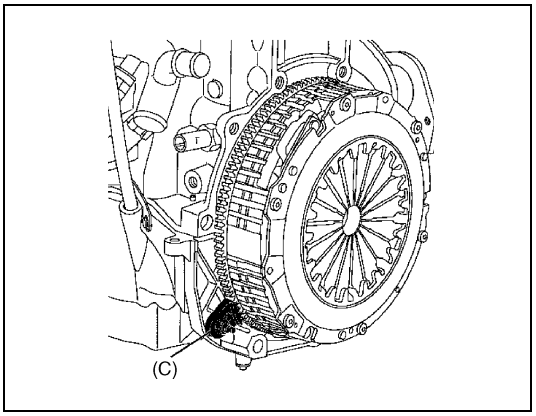

12) Loosen crankshaft pulley bolt as follows.
   a) Lock flywheel using special tool (C).

Special tool
(C): 09916-98110

   b) Remove special tools (A) and (B).
   c) Loosen crankshaft pulley bolt, and remove crank shaft pulley.
   d) Remove special tool (C).
   e) Insert special tools (A) and (B) to removed positions at step b).

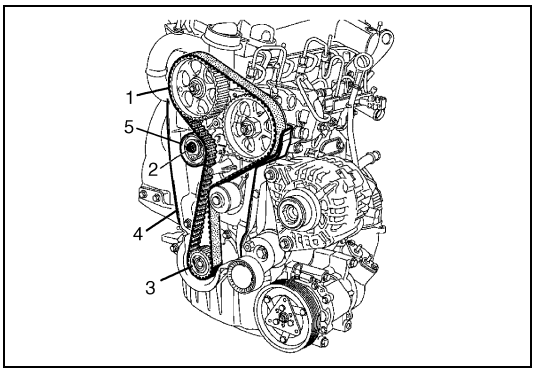

13) Loosen timing belt tensioner bolt (2).
14) Remove timing belt (1).
15) Remove timing belt tensioner (5), timing belt pulley and timing belt inner cover (4), if necessary.

Installation

1) Clean mating surface of oil pump pulley, crankshaft timing belt pulley and crankshaft accessory belt pulley.

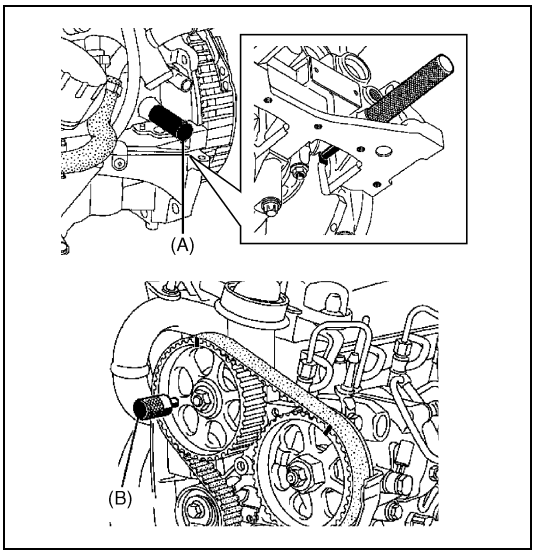

2) Confirm that special tool (A) and (B) is installed to cylinder block and cylinder head. If special tool(s) is removed, install special tool(s) referring to “Pistons, Piston Rings, Connecting Rods and Cylinders Removal and Installation” in this section or “Camshaft and Tappet Removal and Installation” in this section.

Special tool
(A): 09919-58110
(B): 09919-58120

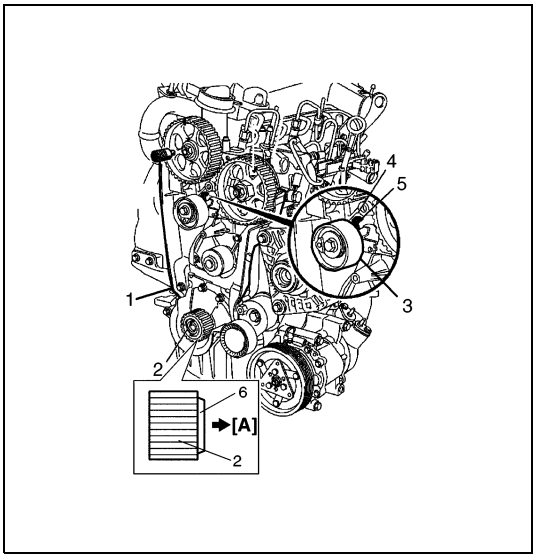

3) Install timing belt inner cover (1), timing belt pulley (2) and timing belt tensioner (3), if necessary.

CAUTION:
Install timing belt pulley so that boss side (6) may come to the gasket holder plate side.

NOTE:
Be sure to position peg (5) of timing belt tensioner (3) to groove (4) of cylinder block precisely.

Tightening torque
Timing belt inner cover bolt: 9 N·m (0.9 kg-m, 7.0 lb-ft)

[A]: Gasket holder plate side

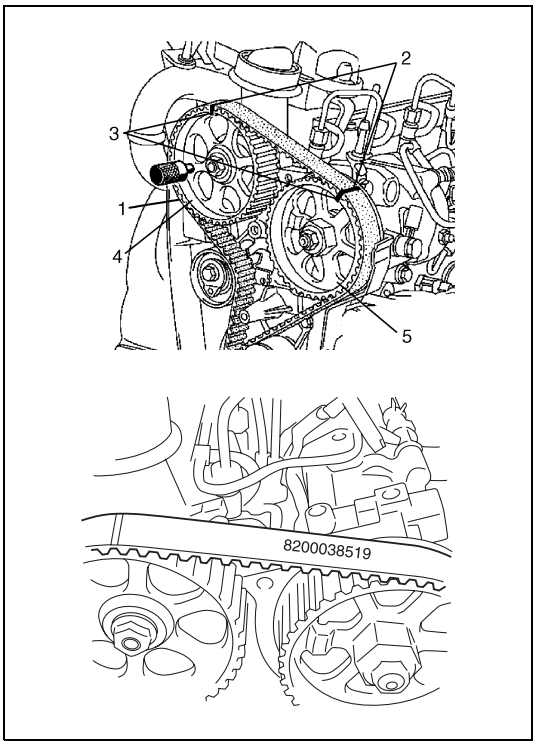

4) Install timing belt (1) aligning its matching lines (2) with matching marks (3) of camshaft pulley (4) and high pressure pump pulley (5).

NOTE:
- **Be sure to install timing belt to proper direction as shown in figure.**
- **Timing belt has 18 teeth between its matching lines.**

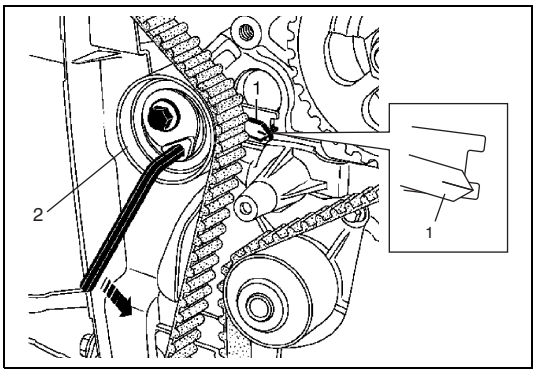

5) Using hexagon wrench, align movable index (1) of timing belt tensioner (2) to specified position as shown in figure by turning timing belt tensioner counterclockwise. And then, tighten timing belt tensioner bolt to specified torque.

Tightening torque
Timing belt tensioner bolt (a): 27 N·m (2.7 kg-m, 19.5 lb-ft)

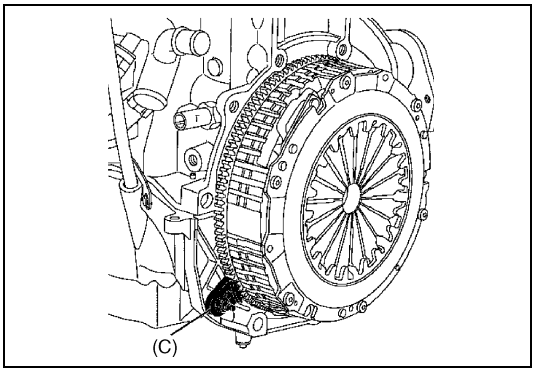

6) Install crankshaft pulley as follows.
   a) Lock flywheel using special tool (C).

Special tooll
(C): 09916-98110

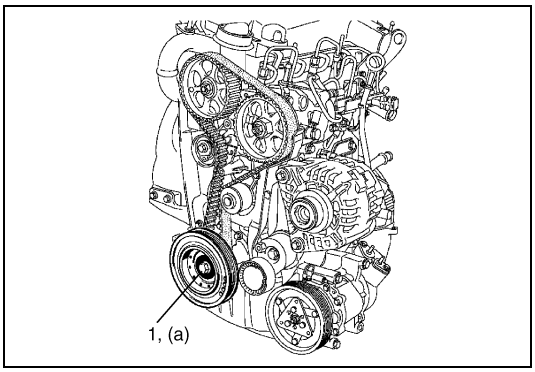

   b) Install crankshaft pulley and tighten its bolt as follows.
      i) Tighten crankshaft pulley bolt to 120 N·m (12.0 kg-m, 87.0 lb-ft).
      ii) Retighten crankshaft pulley bolt to 95°.

Tightening torque
Crankshaft pulley bolt (a):
Tighten 120 N·m (12.0 kg-m, 87.0 lb-ft) and 95° by the specified procedure

7) Remove special tools (A), (B) and (C).

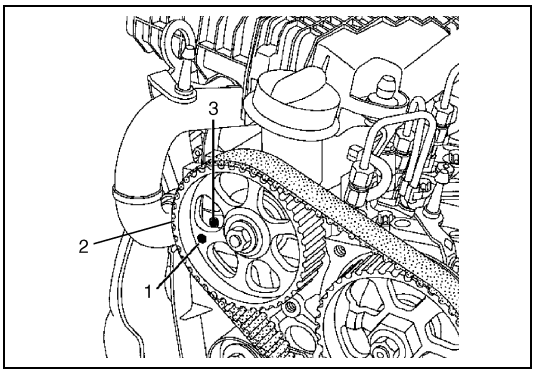

8) Turn crankshaft two revolutions clockwise, and stop it just before aligning hole (1) of camshaft timing belt pulley (2) matches with hole (3) of cylinder head.

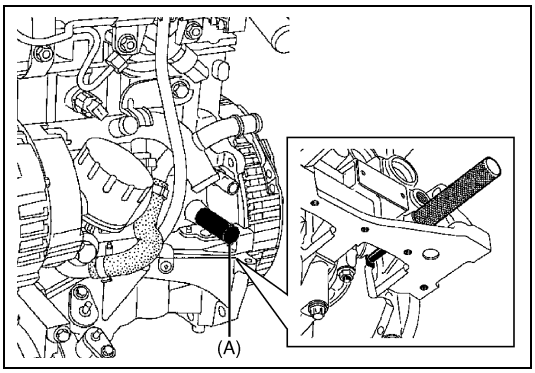

9) Insert special tool (A) into TDC pin hole as shown in figure.

Special tool
(A): 09919-58110

10) Turn crankshaft pulley clockwise until crankshaft touches special tool (A).

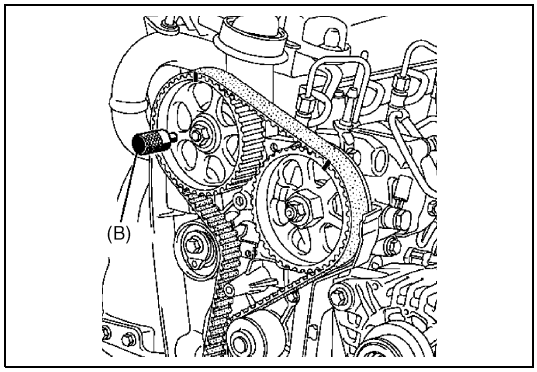

11) Check that special tool (B) inserts holes of timing belt pulley and cylinder head smoothly.

Special tool
(B): 09919-58120

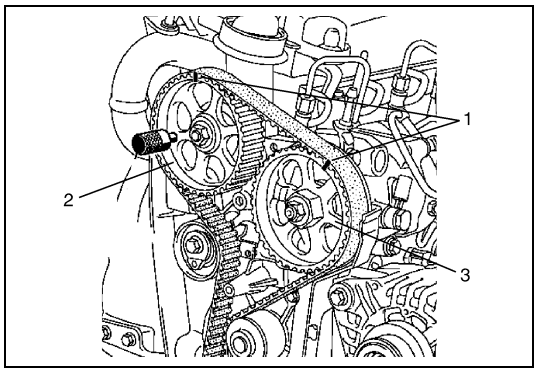

12) Check that there are 18 teeth between matching marks (1) of camshaft pulley (2) and high pressure pump pulley (3).
If not, remove timing belt and return to step 3).

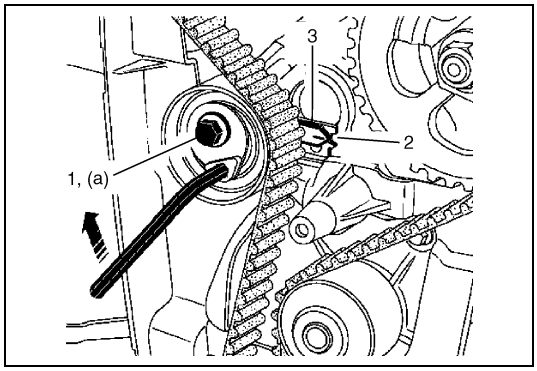

13) Loosen timing belt tensioner bolt (1) while holding timing belt tensioner by hexagon wrench, and then gradually bring movable index (3) to center of timing window (2) turning timing belt tensioner clockwise. And then, tighten timing belt tensioner bolt (1) as specified torque.

Tightening torque
Timing belt tensioner bolt (a): 25 N·m (2.5 kg-m, 18.0 lb-ft)

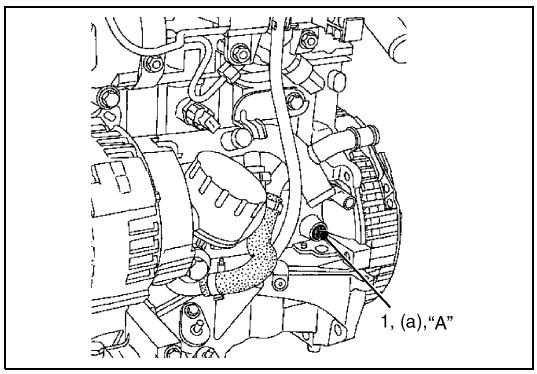

14) Apply sealant "A" to thread of TDC pin cap (1), and tighten TDC pin cap as specified torque.

Tightening torque
TDC pin cap (a): 20 N·m (2.0 kg-m, 14.5 lb-ft)

"A": RHODORSEAL 5661®

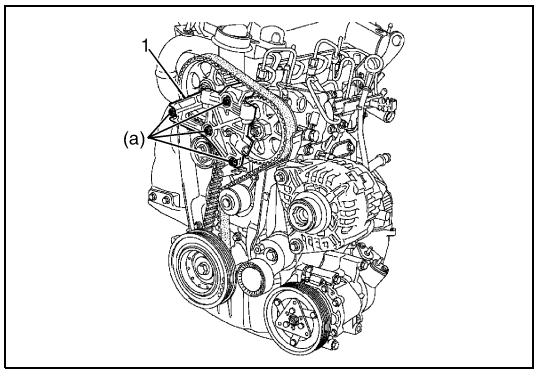

15) Install generator upper bracket support (1).

Tightening torque
Generator upper bracket support bolt (a):
21 N·m (2.1 kg-m, 15.5 lb-ft)

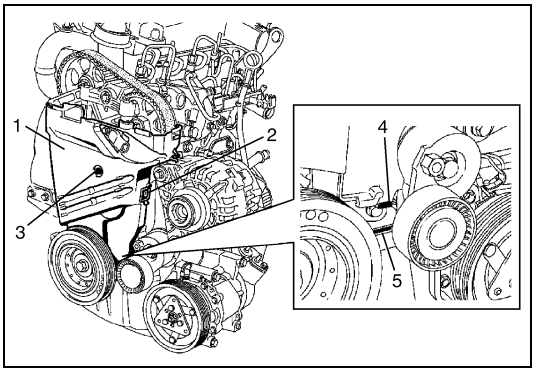

16) Install timing belt lower cover (1) hooking its tabs (2), and install its plastic bolt (3).

NOTE:

When installing timing belt lower cover, position its tab (4) into hole (5) of inner timing cover.

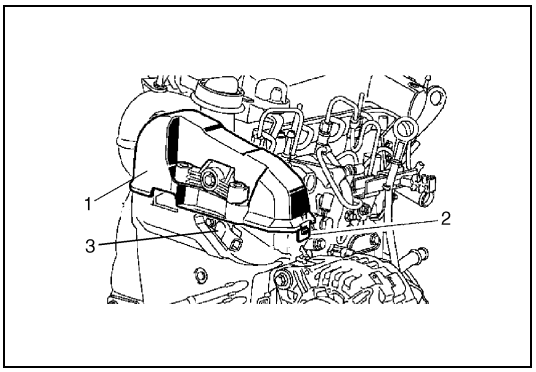

17) Install timing belt upper cover (1) hooking its tabs (2).
18) Install CMP sensor (3).

Tightening torque
CMP sensor bolt:
8 N·m (0.8 kg-m, 6.0 lb-ft)

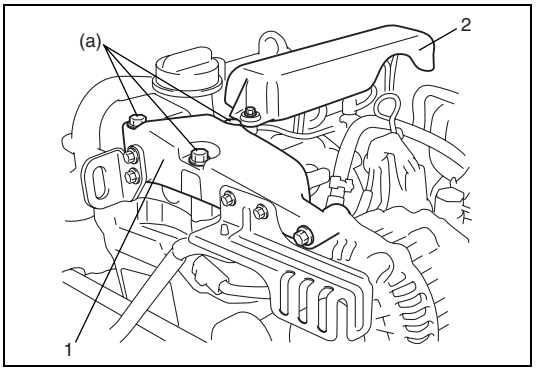

19) Install generator upper bracket (1) and injector cover (2).

Tightening torque
Generator upper bracket bolt (a):
40 N·m (4.0 kg-m, 29.0 lb-ft)

20) Install engine assembly to vehicle referring to “Engine Assembly Removal and Installation” in this section.

Timing Belt and Belt Tensioner Inspection

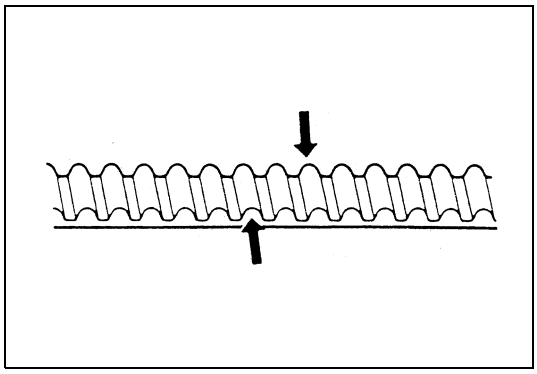

- Inspect timing belt for wear or crack.
  Replace it as necessary.

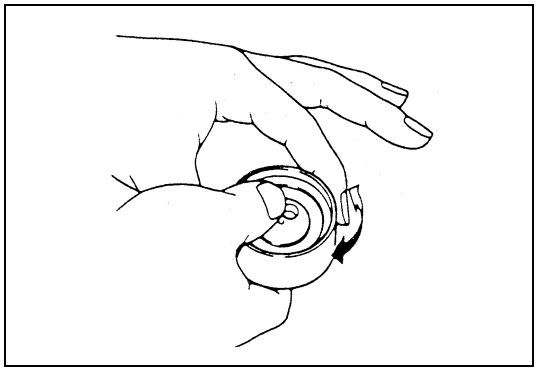

- Inspect timing belt tensioner and roller for smooth rotation.
  Replace it as necessary.

Oil Pump and Oil Pump Chain Components

CAUTION:

Never disassemble oil pump. Disassembly will spoil its original function. If faulty condition is found, replace it with new one.

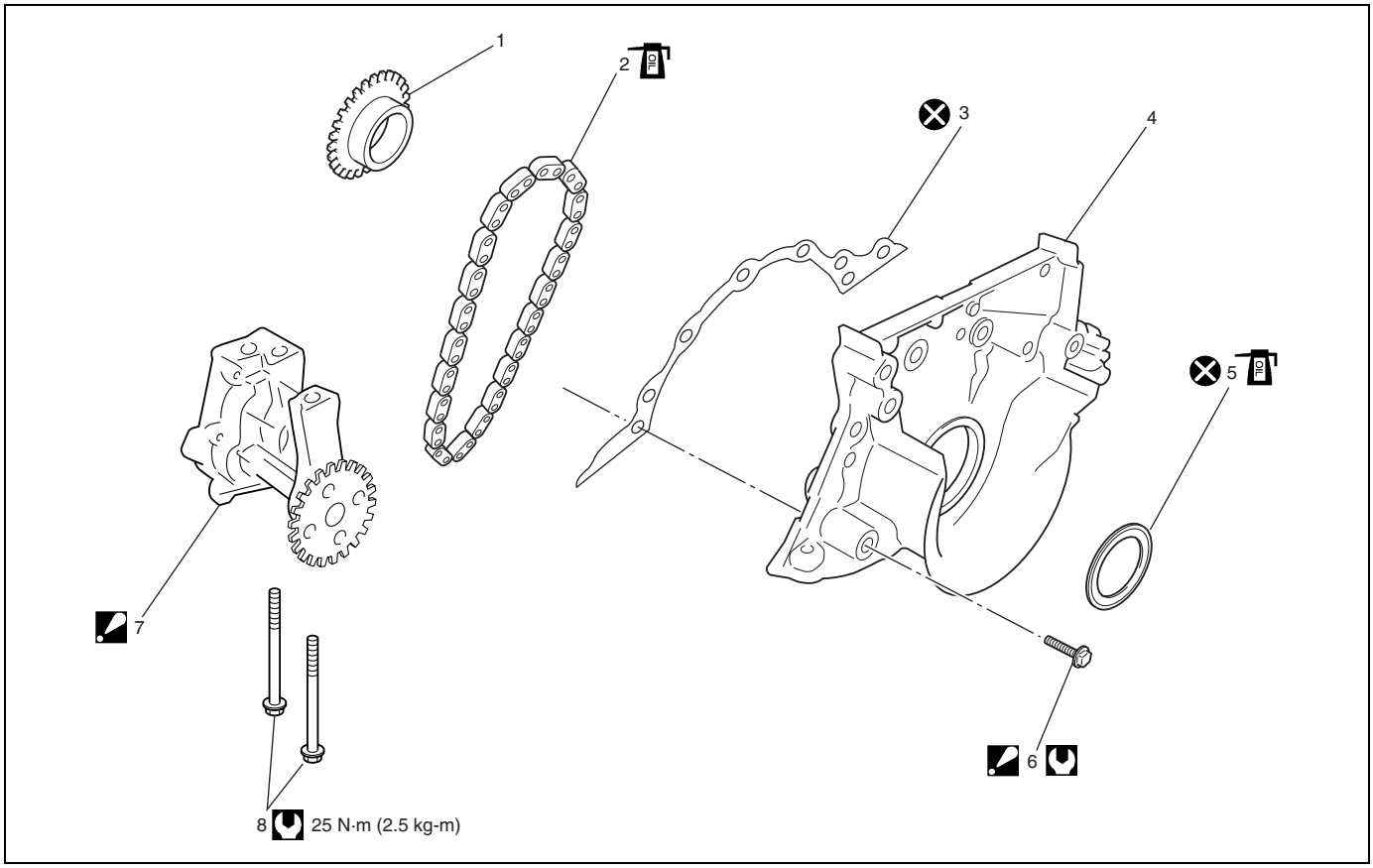

	1. Oil pump drive sprocket		5. Gasket holder plate oil seal : Apply engine oil to oil seal lip.		Tightening Torque
	2. Oil pump chain : Apply engine oil to sliding surface.		6. Gasket holder plate bolt : Tighten 11 N·m (1.1 kg-m, 8.0 lb-ft) by the specified procedure.		Do not reuse.
	3. Gasket		7. Oil pump assembly : Never disassemble oil pump assembly		
	4. Gasket holder plate		8. Oil pump assembly bolt		

Oil Pump and Oil Pump Chain Removal and Installation

Removal

1) Remove engine assembly from vehicle referring to “Engine Assembly Removal and Installation” in this section.
2) Remove upper oil pan referring to “Oil Pan and Oil Pump Strainer Removal and Installation” in this section.

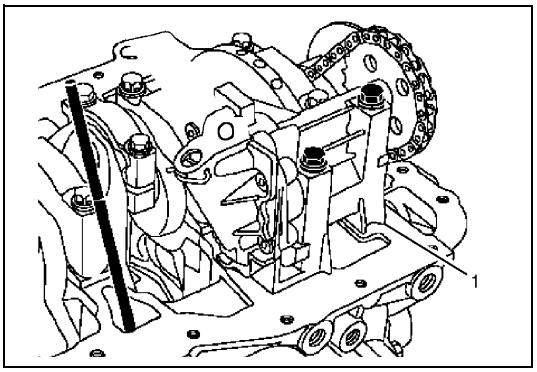

3) Remove oil pump (1) from cylinder block.
4) Remove timing belt referring to “Timing Belt and Belt Tensioner Removal and Installation” in this section.

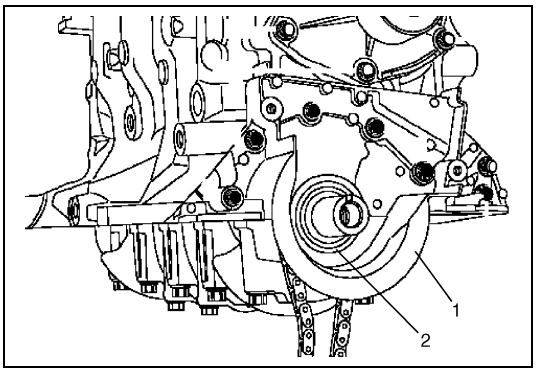

5) Remove gasket holder plate (1).
6) Remove gasket holder plate oil seal (2).

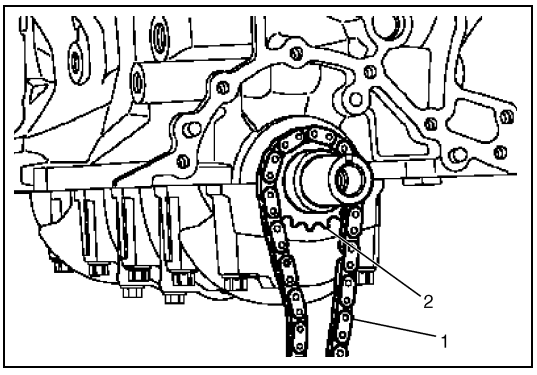

7) Remove oil pump chain (1) and oil pump drive sprocket (2).

Installation

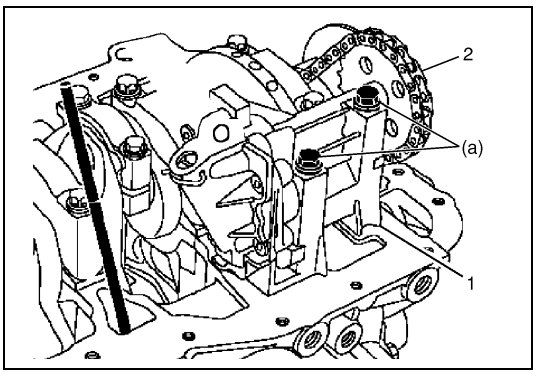

1) Install oil pump (1), oil pump chain (2) and oil pump drive sprocket all together.
   Tighten oil pump bolts to specified torque.

Tightening torque
Oil pump bolt (a): 25 N·m (2.5 kg-m, 18.0 lb-ft)

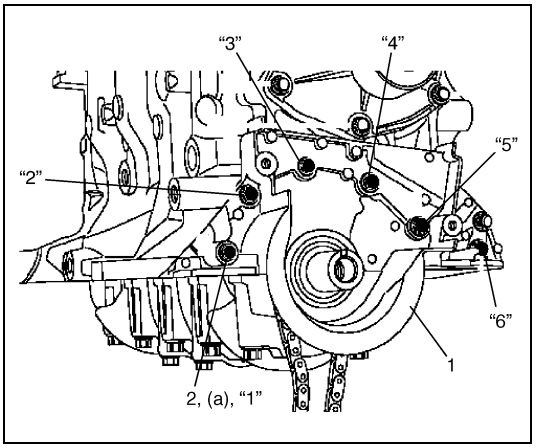

2) Install gasket holder plate (1) to cylinder block with new gasket.
   a) Tighten gasket holder plate bolts ("1" and "6") to 11 N·m (1.1 kg-m, 8.0 lb-ft).
   b) Tighten gasket holder plate bolts ("2", "3", "4" and "5") to 11 N·m (1.1 kg-m, 8.0 lb-ft).

Tightening torque
Gasket holder plate bolt (a):
Tighten 11 N·m (1.1 kg-m, 8.0 lb-ft) by the specified procedure

3) Install upper oil pan and lower oil pan referring to "Oil Pan and Oil Pump strainer Removal and Installation" in this section.

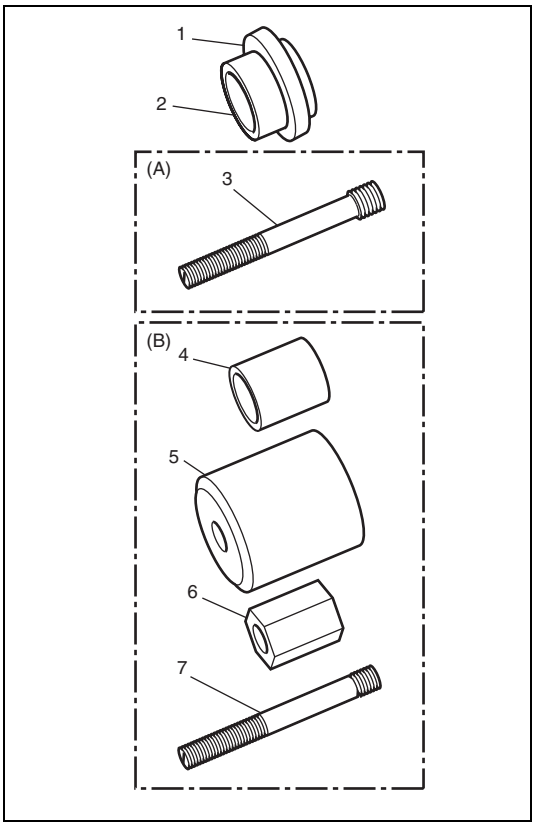

4) Install new gasket holder plate oil seal (1) to gasket holder plate using special tool as follows.

CAUTION:
Do not touch oil seal (1) so that it is extremely fragile. Whenever installing new oil seal, it must be installed using special tool (A), (B) and protector (2) supplied with new oil seal. If it doesn't follow the above-mentioned service, it may cause oil leak from oil seal.

Special tool
(A): 09911-98130
(B): 09911-98140

3. Bolt
4. Spacer
5. Installer
6. Nut
7. Not necessary.

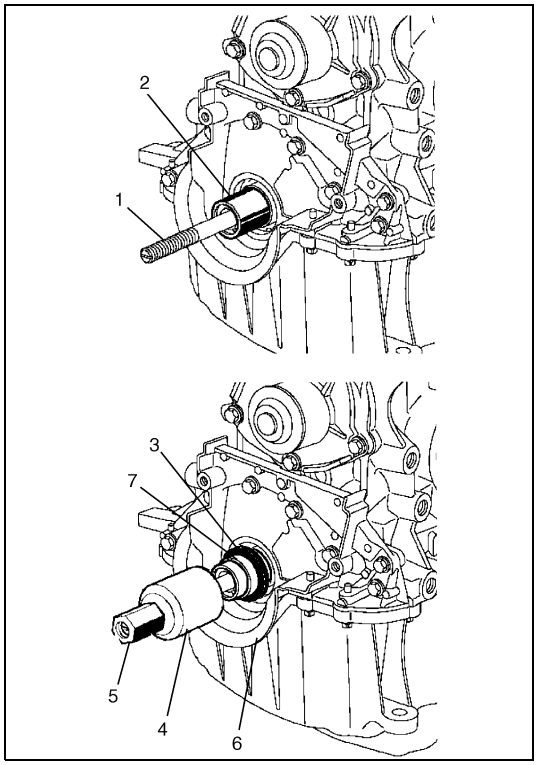

a) Install bolt (1) and spacer (2) of special tool to crankshaft.
b) Install protector (7) together with new oil seal (3) to spacer.
c) Install oil seal installer (4) of special tool to bolt (1).
d) Tighten nut (5) of special tool until oil seal installer (4) comes into contact with gasket holder plate (6).
e) Remove special tool and protector.

5) Install timing belt referring to “Timing Belt and Belt Tensioner Removal and Installation” in this section.
6) Install engine assembly to vehicle referring to “Engine Assembly Removal and Installation” in this section.

Oil Pump and Oil Pump Chain Inspection

- Check rotor and oil pump cases for excessive wear or damage.
  If any malcondition is found, replace oil pump assembly.

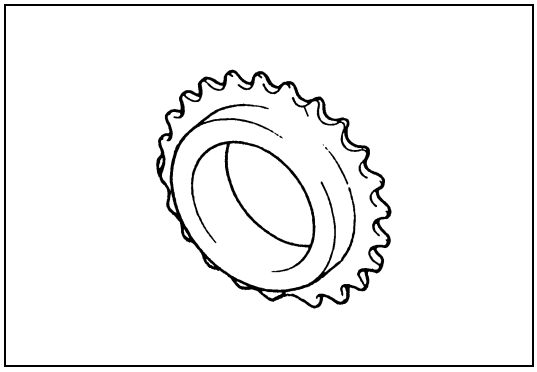

- Check teeth of oil pump drive sprocket for wear or damage.
  If any malcondition is found, replace oil pump drive sprocket.

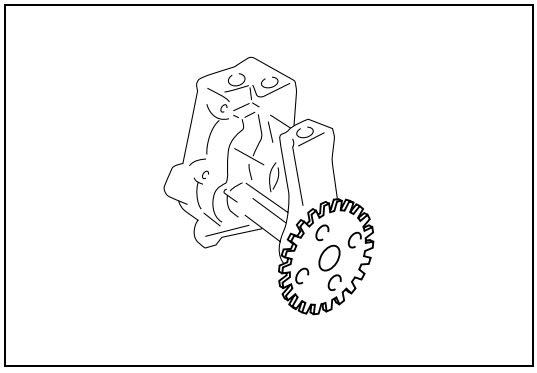

- Check teeth of oil pump sprocket for wear or damage.
  If any malcondition is found, replace oil pump assembly.

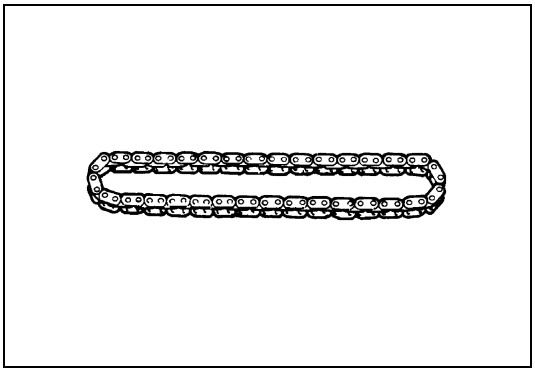

- Check oil pump chain for wear or damage.
  If any malcondition is found, replace oil pump chain.

Camshaft and Tappet Components

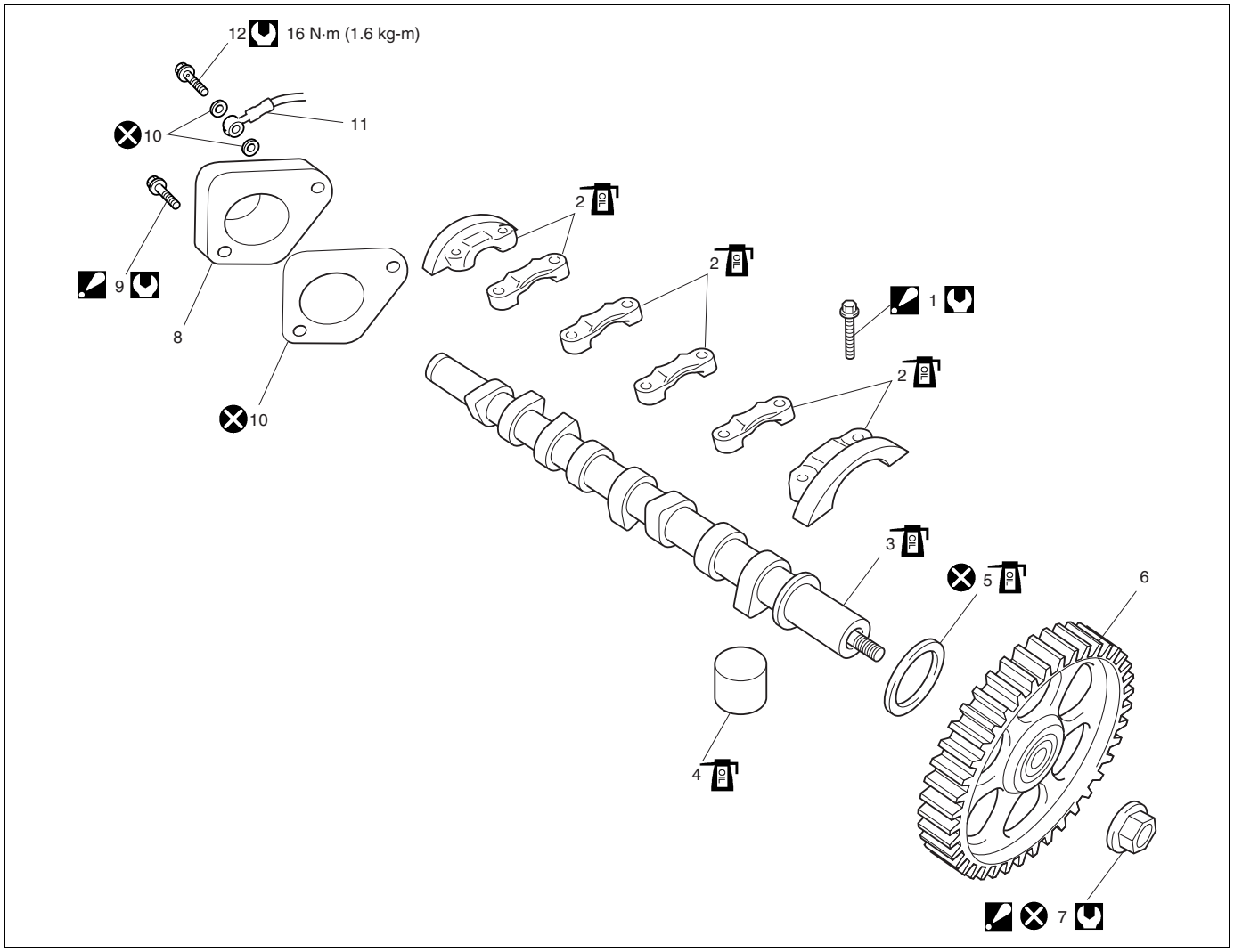

1. Camshaft housing bolt : Tighten 10 N·m (1.0 kg-m, 7.5 lb-ft) by the specified procedure.	6. Camshaft pulley	11. Vacuum pump oil hose
2. Camshaft housing : Apply engine oil to sliding surface	7. Camshaft pulley nut : Tighten 30 N·m (3.0 kg-m, 22.0 lb-ft) and 85° by the specified procedure.	12. Vacuum pump oil hose union bolt
3. Camshaft : Apply engine oil to sliding surface	8. Camshaft cover	Tightening torque
4. Tappet : Apply engine oil around tappet.	9. Camshaft cover bolt : Tighten 5 N·m (0.5 kg-m, 4.0 lb-ft) and 12 N·m (1.2 kg-m, 9.0 lb-ft).	Do not reuse.
5. Camshaft oil seal :Apply engine oil to oil seal lip.	10. Gasket	

Camshaft and Tappet Removal and Installation

Removal

1) Remove engine assembly from vehicle referring to “Engine Assembly Removal and Installation” in this section.
2) Remove timing belt referring to “Timing Belt and Tensioner Removal and Installation” in this section.

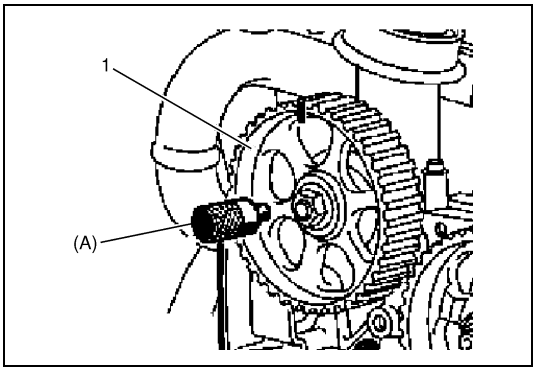

3) Remove special tool (A).

Special tool
(A): 09919-58120

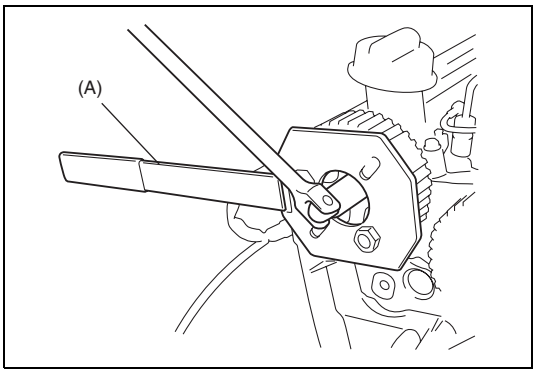

4) Remove camshaft pulley as follows.
   a) Fix camshaft pulley using special tool.

Special tool
(A): 09917-68221

   b) Loosen camshaft pulley nut, and remove camshaft pulley.
5) Remove cylinder head cover referring to “Cylinder Head Cover Removal and Installation” in this section.

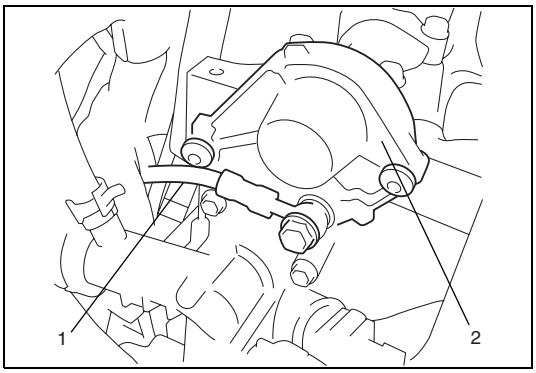

6) Disconnect vacuum pump oil hose (1) from camshaft cover (2).
7) Remove camshaft cover (2).

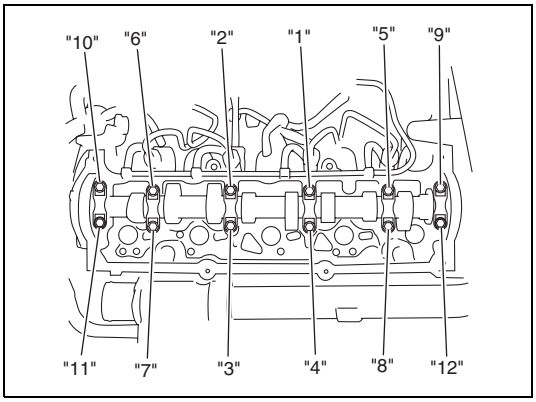

8) Loosen camshaft housing bolts in numerical order (“1” to “12”) as indicated in the figure, and remove them.
9) Remove camshaft housing and camshaft from cylinder head.

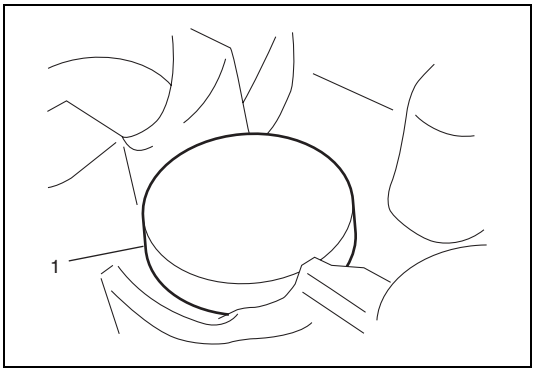

10) Remove tappet (1) from cylinder head.

CAUTION:
Note original position in which each tappet was installed when valve lash (clearance) adjustment is not necessary. If each tappet is not installed to original position, engine will spoil its original performance.

Installation

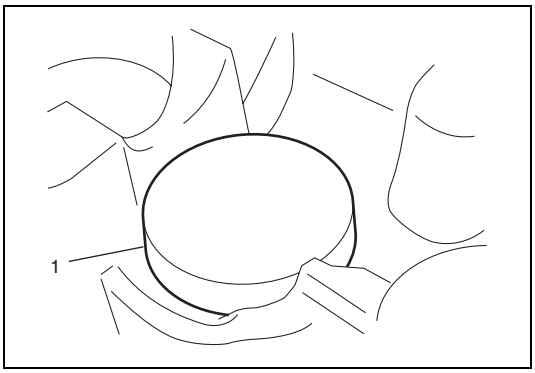

1) Apply engine oil around tappet (1), and then install it to cylinder head.

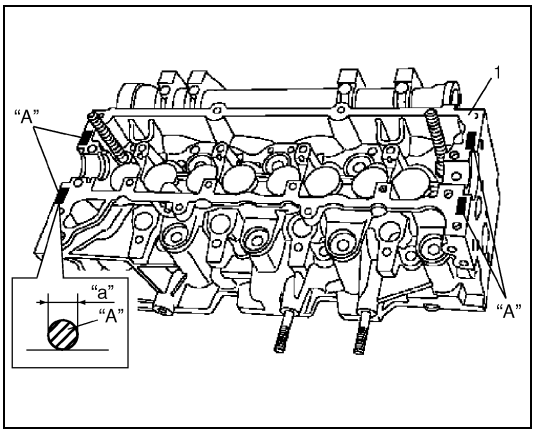

2) Remove oil, old sealant and dust from sealing surfaces. After cleaning, apply sealant "A" to cylinder head (1) sealing surface area as shown in figure.

"A": Loctite 5181®

"a": 1 mm (0.04 in.)

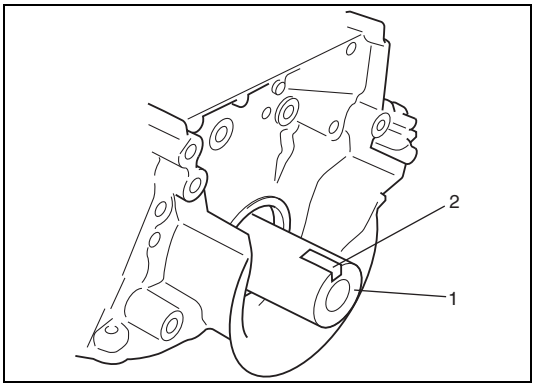

3) Install camshaft to cylinder head as follows.
   a) Direct key groove (2) upward by turning crankshaft (1) clockwise.

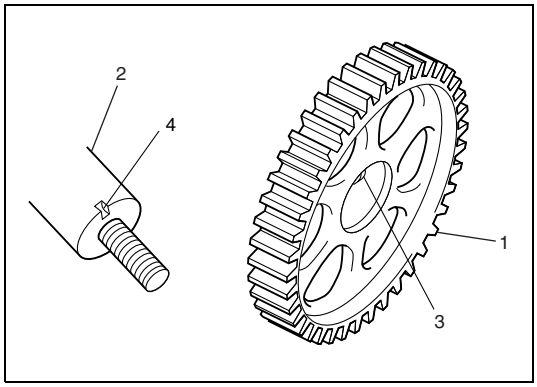

b) Fit camshaft pulley with camshaft aligning key (3) of camshaft pulley to key groove (4) of camshaft, and then tighten camshaft pulley nut to temporary.
c) Apply engine oil to sliding surface of each camshaft and camshaft journal.

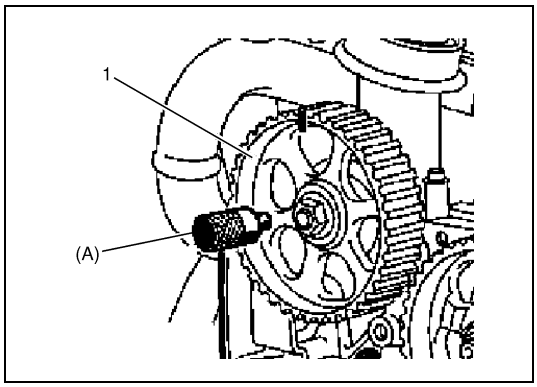

d) Fit camshaft to cylinder head and install special tool into holes of timing belt pulley (1) and cylinder head as shown in figure.

Special tool
(A): 09919-58120

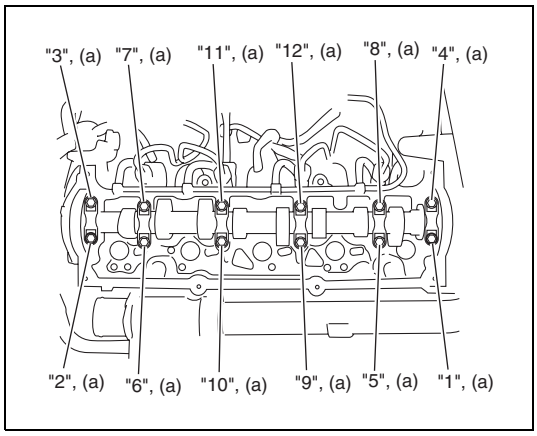

4) Install camshaft housing to cylinder head as follows.
a) Fit camshaft housing to cylinder head in specified position as shown.
b) Tighten camshaft housing bolts temporarily by hand.
c) Tighten camshaft housing bolts in numerical order as indicated in figure a little at a time till they are tightened to specified torque.

Tightening torque
Camshaft housing bolt (a):
Tighten 10 N·m (1.0 kg-m, 7.5 lb-ft) by the specified procedure

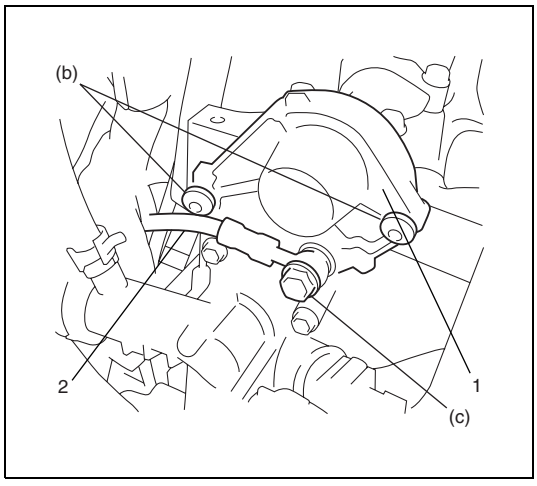

5) Install camshaft cover (1) with new gasket.

Tightening torque
Camshaft cover bolt (b):
Tighten 5 N·m (0.5 kg-m, 4.0 lb-ft) and 12 N·m (1.2 kg-m, 9.0 lb-ft)

6) Connect vacuum pump oil hose (2) to rear camshaft (1) cover with new gasket.

Tightening torque
Vacuum pump oil hose union bolt (c):
16 N·m (1.6 kg-m, 12.0 lb-ft)

7) Remove camshaft pulley and special tool.

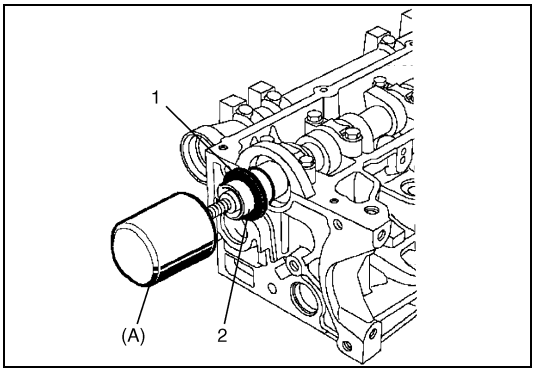

8) Install protector (2) together with new oil seal (1) using special tool with plastic hammer until special tool comes into contact with cylinder head

CAUTION:
Do not touch oil seal (1) so that it is extremely fragile. Whenever installing new oil seal, it must be installed using special tool (A) and protector (2) supplied with new oil seal. If it doesn't follow the above-mentioned service, it may cause oil leak from oil seal.

Special tool
(A): 09911-98120

9) Install cylinder head cover referring to "Cylinder Head Cover Removal and Installation" in this section.

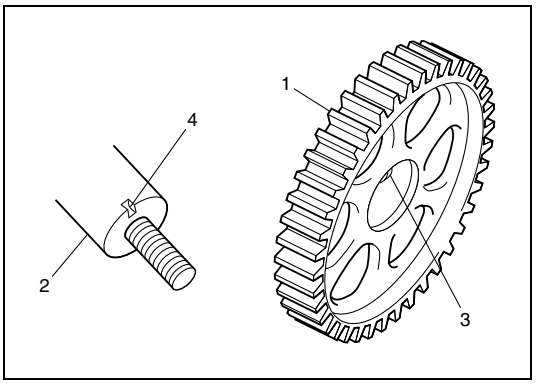

10) Install camshaft pulley (1) to camshaft (2) as follows.
a) Fit camshaft pulley with camshaft aligning key (3) of camshaft pulley to key groove (4) of camshaft.

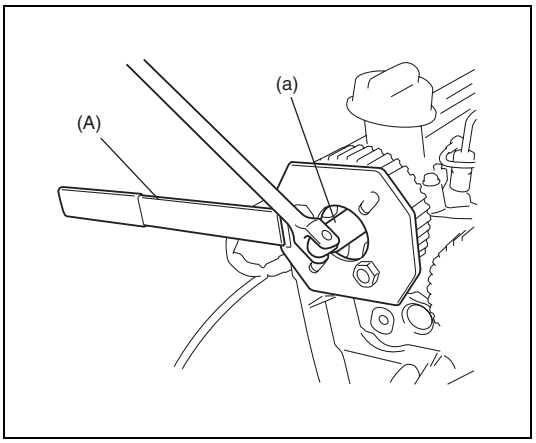

b) Fix camshaft pulley using special tool.

Special tool
(A): 09917-68221

c) Tighten new camshaft pulley nut to 30 N·m (3.0 kg-m, 22.0 lb-ft).
d) Retighten camshaft pulley nut 85°.

Tightening torque
Camshaft pulley nut (a):
Tighten 30 N·m (3.0 kg-m, 22.0 lb-ft) and 85° by the specified procedure

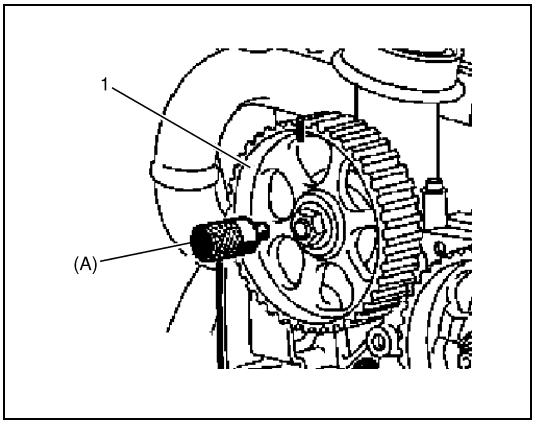

11) Install special tool into timing belt pulley (1) and cylinder head hole.

Special tool
(A): 09919-58120

12) Install timing belt referring to "Timing Belt and Tensioner Removal and Installation" in this section.
13) Check valve lash (clearance) referring to "Valve Lash (Clearance)" in this section.
14) Install engine assembly to vehicle referring to "Engine Assembly Removal and Installation" in this section.

Camshaft and Tappet Inspection

Camshaft

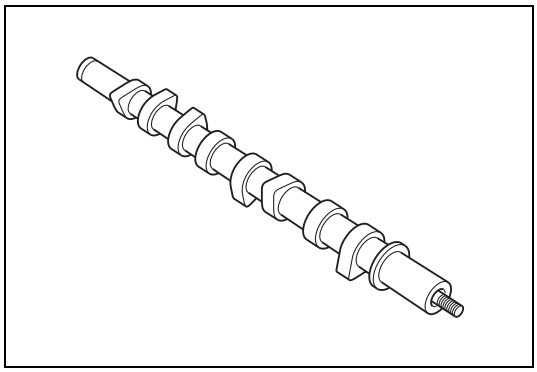

- Check teeth of sprocket for wear or damage.
- Check journals and cam faces for wear or damage.
  If any malcondition is found, replace camshaft.

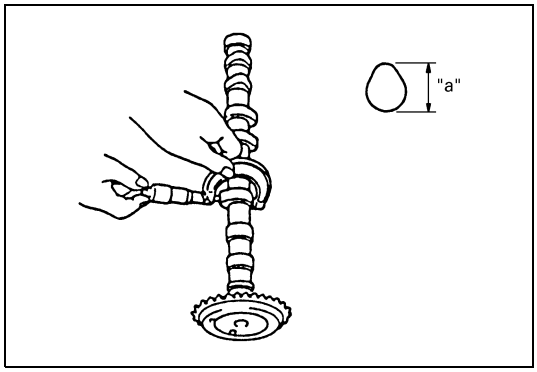

- Using a micrometer, measure cam height “a”. If measured height is out of specification, replace camshaft.

Cam height “a”
In: 43.985 – 44.045 mm (1.73170 – 1.73405 in.)
Ex: 44.565 – 44.625 mm (1.75453 – 1.75688 in.)

Camshaft Journal Wear

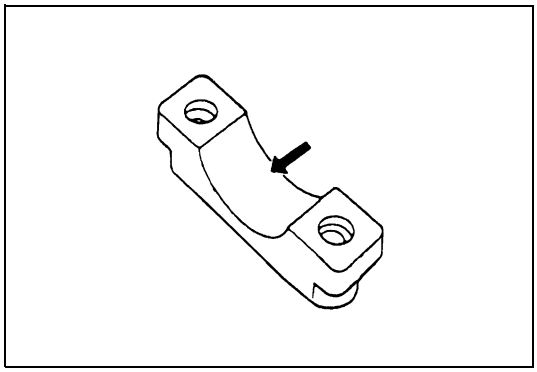

- Check camshaft journals and camshaft housings for pitting, scratches, wear or damage.
  If any malcondition is found, replace camshaft or cylinder head with housing. Never replace cylinder head without replacing housings.

- Check clearance between camshaft and camshaft journal using gauging plastic as follows.

NOTE:

Do not rotate camshaft while gauging plastic is installed.

a) Clean housings and camshaft journals.
b) Remove all tappets.
c) Install camshaft to cylinder head.
d) Place a piece of gauging plastic to full width of journal of camshaft (parallel to camshaft).

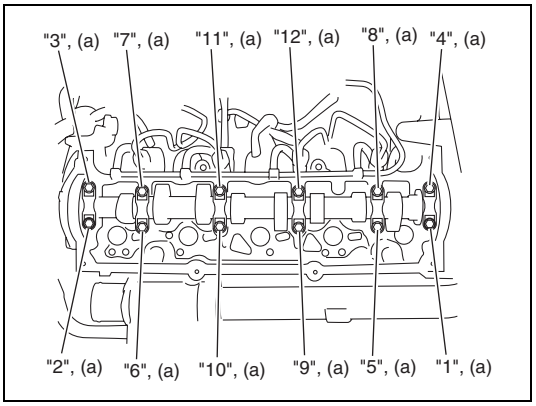

e) Install camshaft housing to cylinder head as follows.
  i) Fit camshaft housing to cylinder head.
  ii) Tighten camshaft housing bolts temporarily by hand.
  iii) Tighten camshaft housing bolts in numerical order as indicated in figure a little at a time till they are tightened to specified torque.

Tightening torque
Camshaft housing bolt (a):
Tighten 10 N·m (1.0 kg-m, 7.5 lb-ft) by the specified procedure

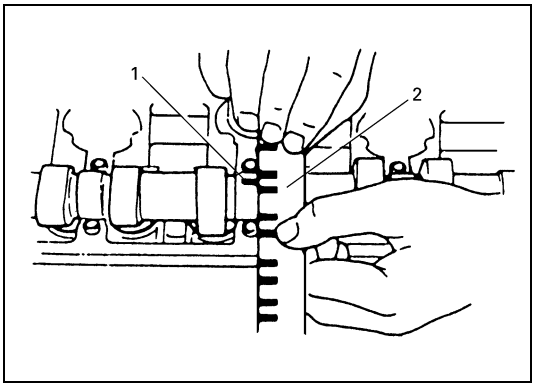

f) Remove housing, and using scale (2) on gauging plastic (1) envelop, measure gauging plastic width at its widest point.

Camshaft journal clearance:
0.049 – 0.171 mm (0.00193 – 0.00673 in.)

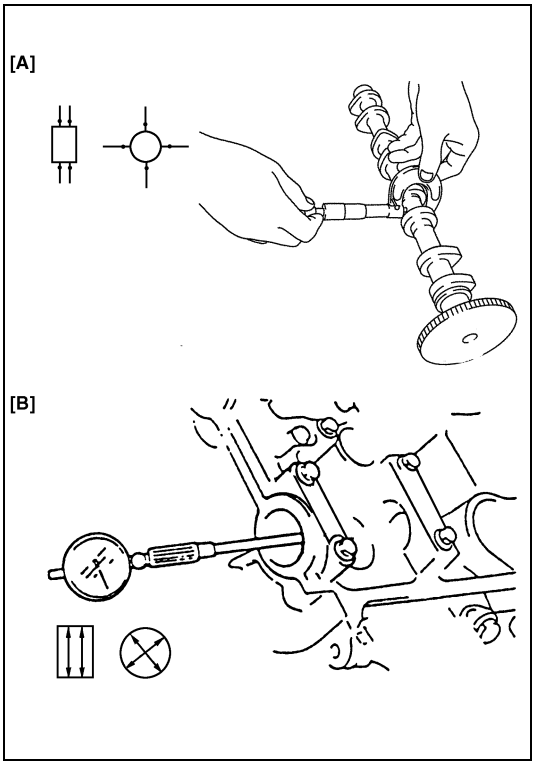

g) If measured camshaft journal clearance exceeds limit, measure journal (housing) bore and outside diameter of camshaft journal. Replace camshaft or cylinder head assembly whichever the difference from specification is greater.

Camshaft journal outside diameter [A]
No.6: 27.979 – 27.999 mm (1.10154 – 1.10232 in.)
Other: 24.979 – 24.999 mm (0.9835 – 0.98421 in.)

Camshaft journal bore diameter [B]
No.6: 28.040 – 28.060 mm (1.10394 – 1.10472 in.)
Other: 25.040 – 25.060 mm (0.98583 – 0.98661 in.)

Camshaft Thrust Play

1) Clean housings and camshaft journals.
2) Remove all tappets.
3) Remove all valves referring to “Valves and Cylinder Head” in this section.
4) Install camshaft to cylinder head.

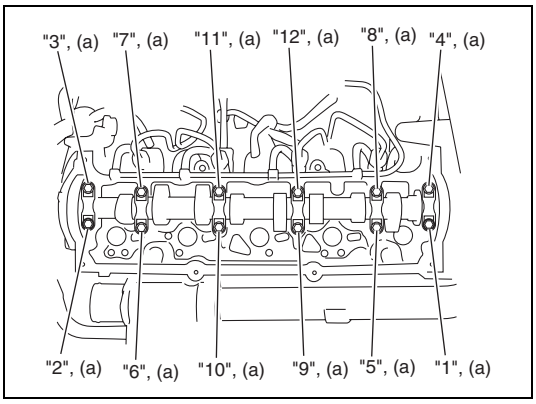

5) Install camshaft housing to cylinder head as follows.
   a) Fit camshaft housing to cylinder head.
   b) Tighten camshaft housing bolts temporarily by hand.
   c) Tighten camshaft housing bolts in numerical order as indicated in figure a little at a time till they are tightened to specified torque.

Tightening torque
Camshaft housing bolt (a):
Tighten 10 N·m (1.0 kg-m, 7.5 lb-ft) by the specified procedure

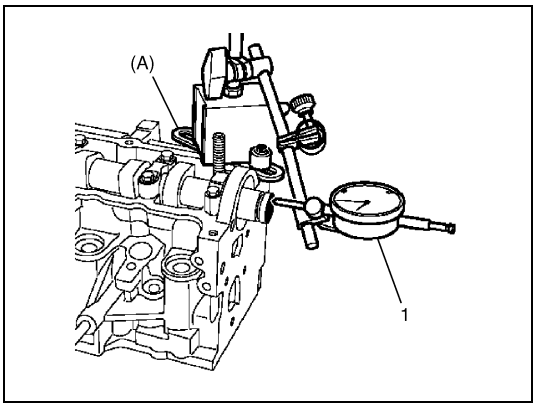

6) Measure camshaft thrust play using special tool and dial gauge (1) as shown in figure.
   If measured thrust play out of its specification, replace camshaft or cylinder head.

Special tool
(A): 09917-68110

Camshaft thrust play:
0.080 – 0.178 mm (0.00315 – 0.00700 in.)

Wear of Tappet

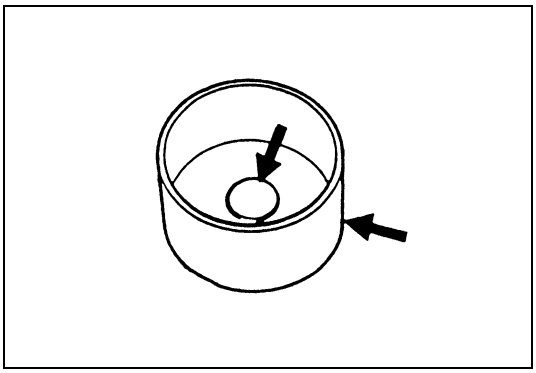

- Check tappet for pitting, scratches or damage.
  If any malcondition is found, replace.

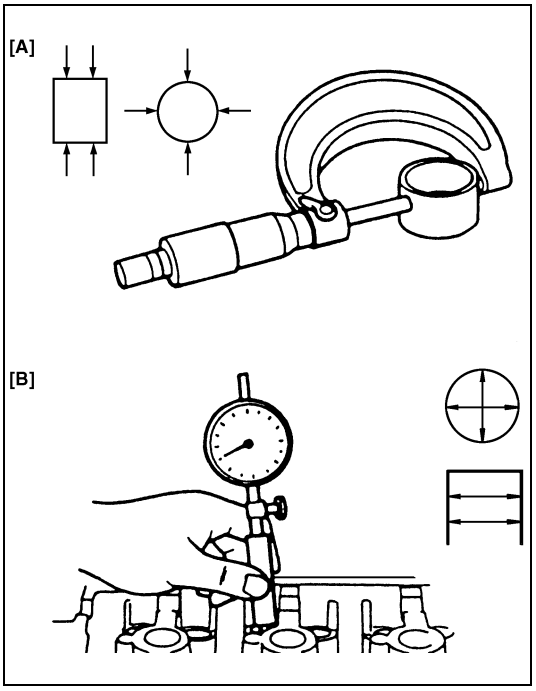

- Measure cylinder head bore and tappet outside diameter to determine cylinder head-to-tappet clearance. If clearance exceeds specification, replace tappet or cylinder head.

Cylinder head to tappet clearance:
0.015 – 0.075 mm (0.00059 – 0.00295 in.)

Tappet outside diameter [A]:
34.965 – 34.985 mm (1.37658 – 1.37736 in.)

Cylinder head tappet bore [B]:
35.000 – 35.040 mm (1.37796 – 1.37952 in.)

Valves and Cylinder Head Components

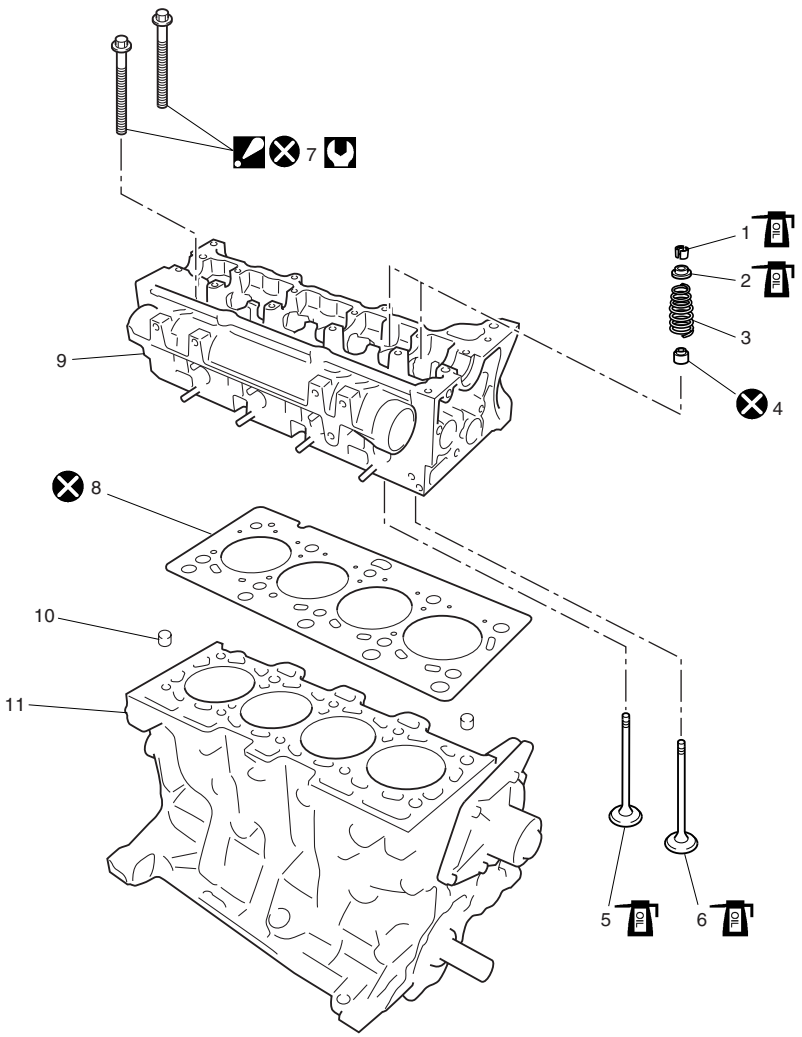

1. Valve cotter	6. Exhaust valve	11. Cylinder block	
2. Valve spring retainer	7. Cylinder head bolt : Tighten 25 N·m (2.5 kg-m, 18.0 lb-ft) and 255° by the specified procedure.	Tightening Torque	
3. Valve spring	8. Cylinder head gasket	Apply engine oil to sliding surface of each parts.	
4. Valve stem seal	9. Cylinder head	Do not reuse.	
5. Intake valve	10. Knock pin		

Valves and Cylinder Head Assembly Removal and Installation

Removal

1) Remove engine assembly from vehicle referring to “Engine Assembly Removal and Installation” in this section.
2) Remove exhaust manifold referring to “Exhaust Manifold Removal and Installation” in this section.
3) Remove camshaft from cylinder head referring to “Camshaft and Tappet Removal and Installation” in this section.

4) Remove EGR body and intake pipe referring to “EGR Body and Intake Pipe Removal and Installation” in this section.
5) Remove thermostat assembly referring to “Thermostat Assembly Removal and Installation” in Section 6B2.
6) Remove injection pump referring to “Injection Pump Removal and Installation” in Section 6E2.
7) Remove common rail referring to “Common rail (High Pressure Fuel Injection Rail) Removal and Installation” in Section 6E2.
8) Remove fuel injector referring to “Fuel Injector Removal and Installation” in Section 6E2.
9) Remove generator and generator upper bracket referring to “Generator Dismounting and Remounting” in Section 6H2.
10) Remove grow plugs referring to “Grow Plug Removal and Installation” in Section 6-2.

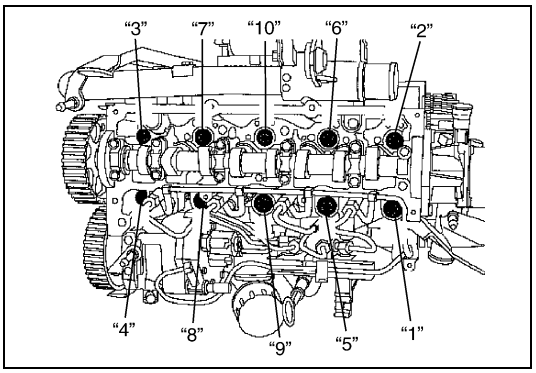

11) Loosen cylinder head bolts in numerical order as indicated in figure, and remove them.
12) Check all around cylinder head for any other parts required to be removed or disconnected and remove or disconnect whatever necessary.

Installation

1) Clean mating surface of cylinder head and cylinder block. Remove oil, old gasket and dust from mating surface.

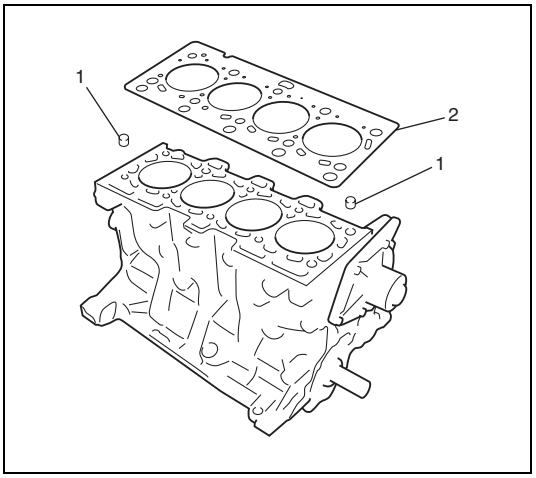

2) Install knock pins (1) to cylinder block.
3) Install new cylinder head gasket (2) to cylinder block.

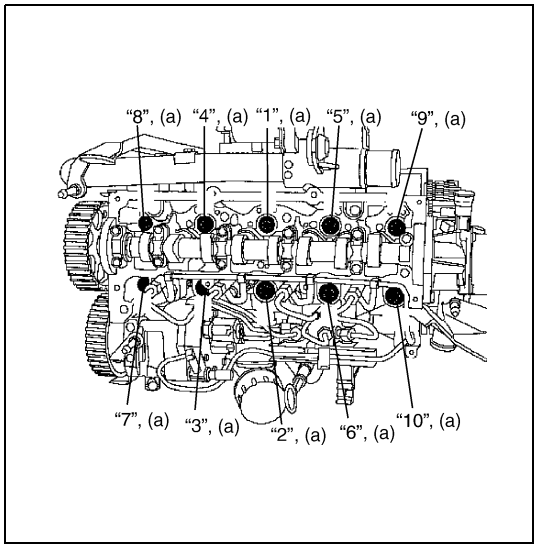

4) Tighten new cylinder head bolts gradually as follows.

NOTE:

Do not oil cylinder head bolt.

a) Tighten all bolts to 25 N·m (2.5 kg-m, 18.0 lb-ft) according to numerical order in figure.
b) Retighten all bolts 255° according to numerical order in figure.

Tightening torque
Cylinder head bolt (a):
Tighten 25 N·m (2.5 kg-m, 18.0 lb-ft) and 255° by the specified procedure

5) Install grow plugs referring to "Grow Plug Removal and Installation" in Section 6-2.
6) Install generator and generator upper bracket referring to "Generator Dismounting and Remounting" in Section 6H2.
7) Install fuel injector referring to "Fuel Injector Removal and Installation" in Section 6E2.
8) Install common rail referring to "Common Rail (High Pressure Fuel Injection Rail) Removal and Installation" in Section 6E2.
9) Install injection pump referring to "Injection Pump Removal and Installation" in Section 6E2.
10) Install thermostat referring to "Thermostat Assembly Removal and Installation" in Section 6B2.
11) Install EGR body and intake pipe referring to "EGR Body and Intake Pipe Removal and Installation" in this section.
12) Install tappet and camshaft to cylinder head referring to "Camshaft and Tappet Removal and Installation" in this section.
13) Install exhaust manifold referring to "Exhaust Manifold Removal and Installation" in this section.
14) Install engine assembly to vehicle referring to "Engine Assembly Removal and Installation" in this section.

Valves and Cylinder Head Assembly Inspection

Valve Protrusion

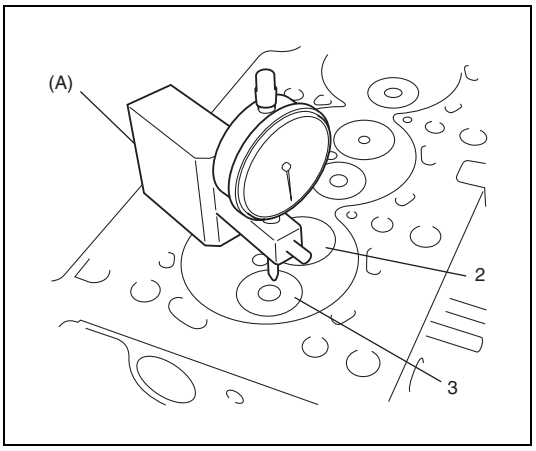

1) Clean valve face and then measure protrusion of each valve using special tool and dial gauge as shown in figure.
   If average is out of specification, grind valve seat and then lap valve on seat.

Special tool
(A): 09910-26510/OUT 0000005

Valve protrusion
Intake and exhaust valve protrusion
"a": –0.07 to 0.07 mm (–0.0027 to 0.0027 in.)

2.	Intake valve
3.	Exhaust valve

Valves and Cylinder Head Assembly Disassembly and Reassembly

Disassembly

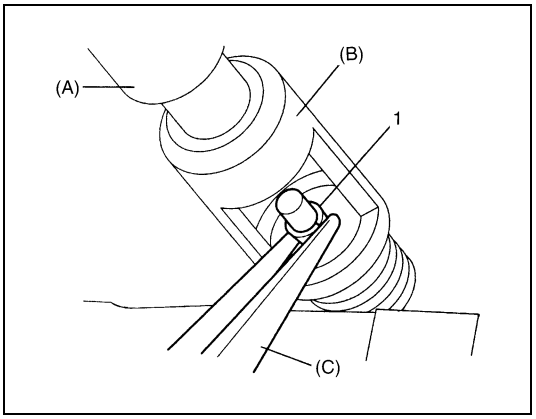

1) Using special tool (A) and (B), compress valve springs and then remove valve cotters (1) using special tool (C) as shown in figure.

Special tool
(A): 09916-14510
(B): 09916-14521
(C): 09916-84511

2) Release special tool, and remove spring retainer and valve spring.
3) Remove valve from combustion chamber side.

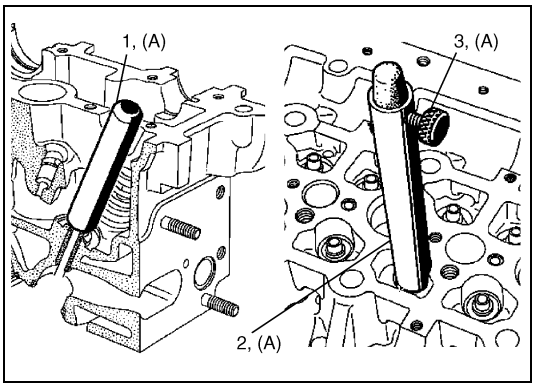

4) Measure stem seal height in order to install stem seal in specified position as follows.
   a) Fit pushrod (1) of special tool on valve stem seal.
   b) Fit guide tube (2) of special tool over pushrod (1) until guide tube comes into contact with cylinder head, and lock pushrod with screw (3).
   c) Remove special tool.

Special tool
(A): 09916-58130

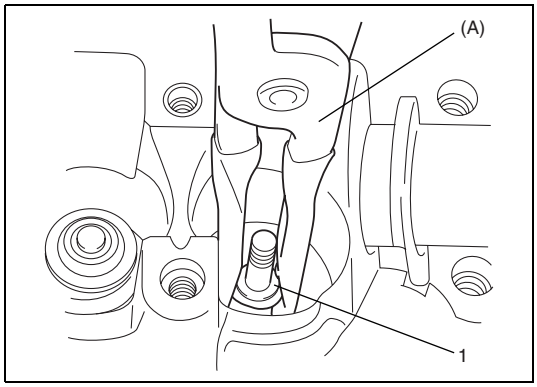

5) Remove stem seal from valve stem using special tool.

Special tool
(A): 09916-48110

Reassembly

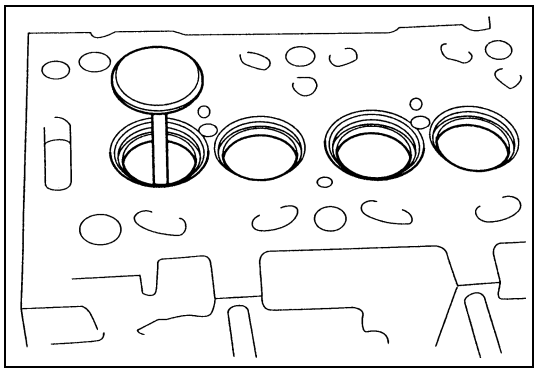

1) Apply engine oil to valve guide bore and valve stem, and install valve to valve guide.

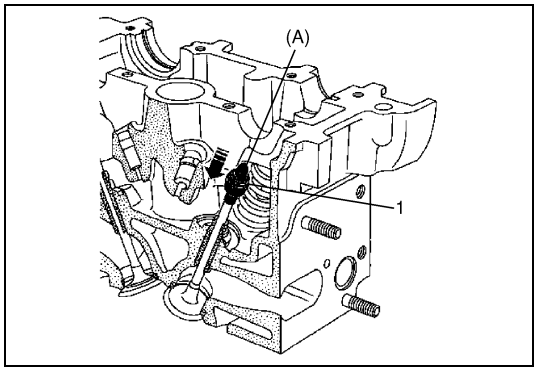

2) Install special tool to valve stem in order to prevent stem seal from damage, and install stem seal to valve stem.

NOTE:

Be sure to remove special tool after installing stem seal.

Special tool
(A): 09916-58130

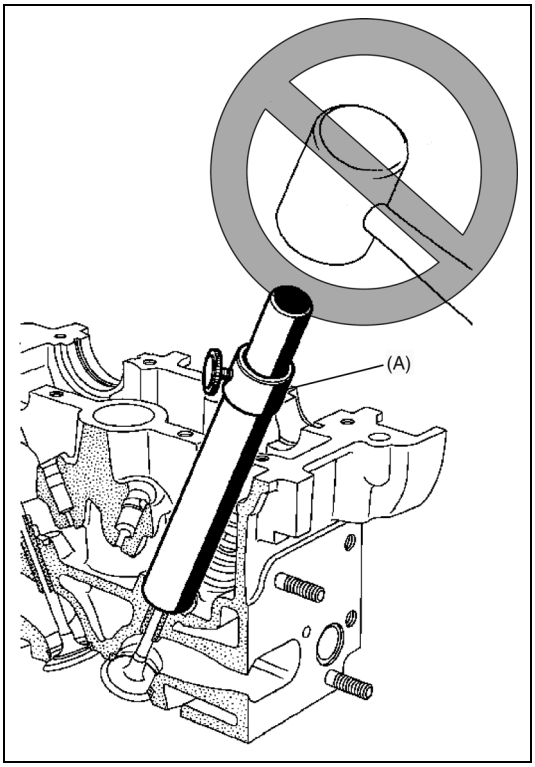

3) Press into stem seal to valve stem in specified position as follows.
   a) Place special tool which is measured stem seal height in removal procedure on valve stem seal.

Special tool
(A): 09916-58130

   b) Press into stem seal tapping top of special tool by hand until special tool touches cylinder head.

CAUTION:
Do not tap special tool by hammer.
It may result in misinstalling of stem seal and damage of special tool.

NOTE:
Do not lubricate the valve stem seal before fitting then.

4) Install valve spring and spring retainer.

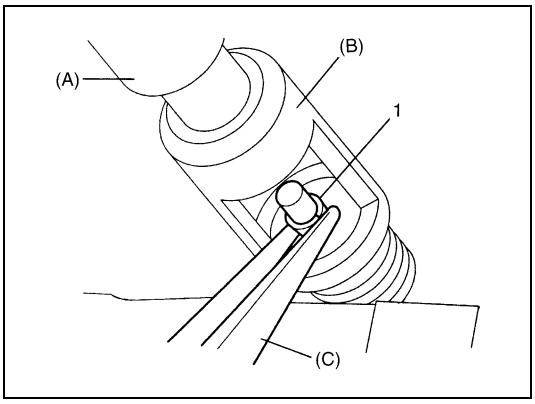

5) Using special tool (A) and (B), compress valve spring. And, fit two valve cotters (1) into groove in valve stem using special tool (C) as shown in figure.

Special tool
(A): 09916-14510
(B): 09916-14521
(C): 09916-84511

Valves and Cylinder Head Components Inspection

Valve Guides

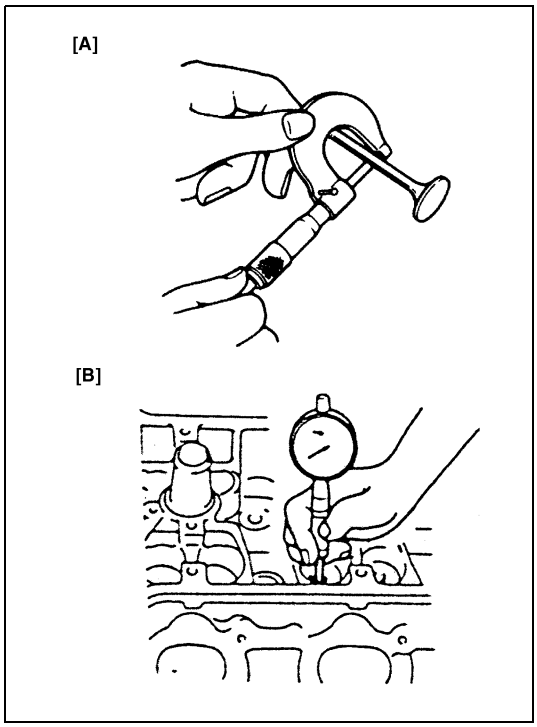

- Using a micrometer and bore gauge, take diameter readings on valve stems and guides to check stem-to-guide clearance. Be sure to take reading at more than one place along the length of each stem and guide.
  If clearance exceeds specification, replace valve and valve guide.

Valve stem-to-guide clearance
In: 0.015 – 0.049 mm (0.00059 – 0.00192 in.)
Ex: 0.029 – 0.063 mm (0.00115 – 0.00248 in.)

Valve stem diameter [A]
In: 5.969 – 5.985 mm (0.23500 – 0.23562 in)
Ex: 5.955 – 5.971 mm (0.23445 – 0.23507 in.)

Valve guide bore [B]
In and Ex: 6.000 – 6.018 mm (0.23622 – 0.23692 in.)

Valves

- Remove all carbon from valves.
- Inspect each valve for wear, burn or distortion at its face and stem end, as necessary, replace it.

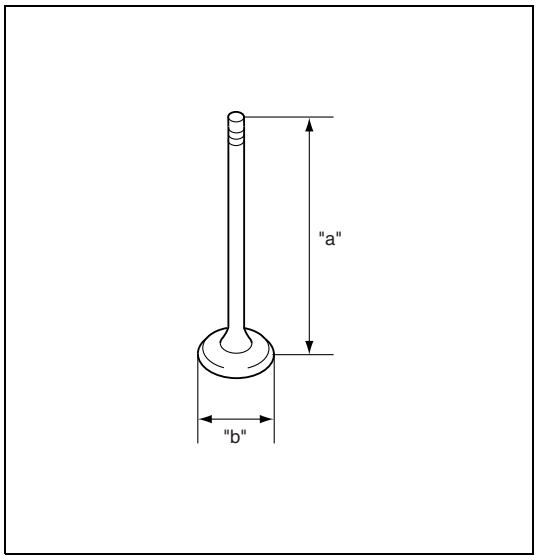

- Measure length “a” of valve.
  If measured length is out of specification, replace valve.

Valve length “a”
In: 100.73 – 101.17 mm (3.9658 – 3.9830 in.)
Ex: 100.53 – 100.97 mm (3.9579 – 3.9751 in.)

- Measure diameter “b” of valve.
  If measured diameter is out of specification, replace valve.

Valve head diameter “b”
In: 33.38 – 33.62 mm (1.3142 – 1.3236 in.)
Ex: 28.88 – 29.12 mm (1.1370 – 1.1464 in.)

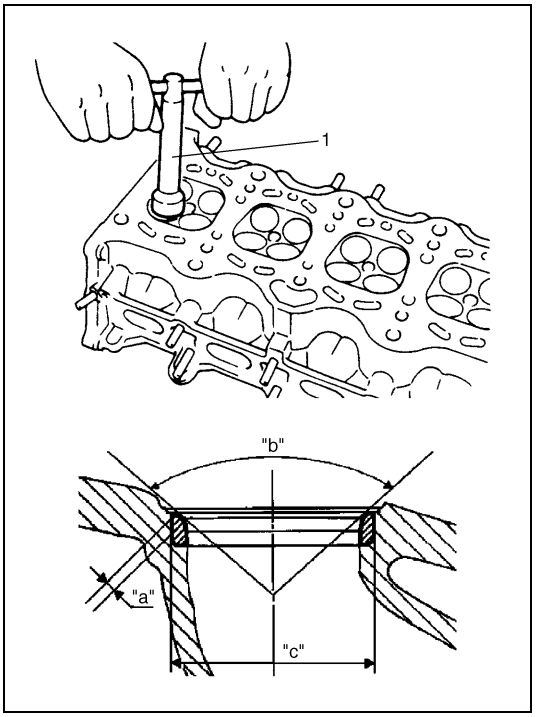

- Valve seat repair:
  A valve seat not producing a uniform contact with its valve or showing width of seating contact that is out of specified range must be repaired by regrinding or by cutting and regrinding and finished by lapping.

a) **Valve Seat**: Use valve seat cutters (1) to make a cut as illustrated in figure.

Seat width
"a": 1.8 mm (0.071 in.)

Seat angle
"b": 89° 30'

b) **Valve Lapping**: Lap valve on seat in two steps, first with coarse size lapping compound applied to face and the second with fine-size compound, each time using valve lapper according to usual lapping method.

Cylinder Head

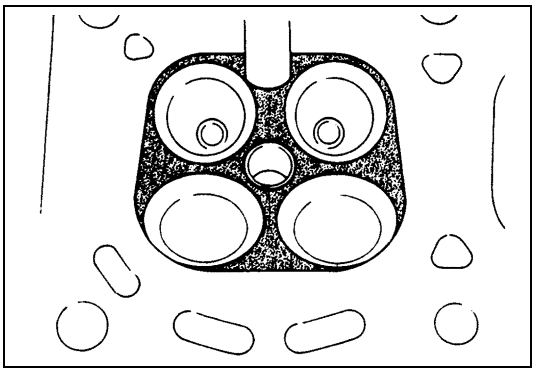

- Remove all carbon deposits from combustion chambers.

NOTE:

Do not use any sharp-edged tool to scrape off carbon deposits. Be careful not to scuff or nick metal surfaces when decarboning. The same applies to valves and valve seats, too.

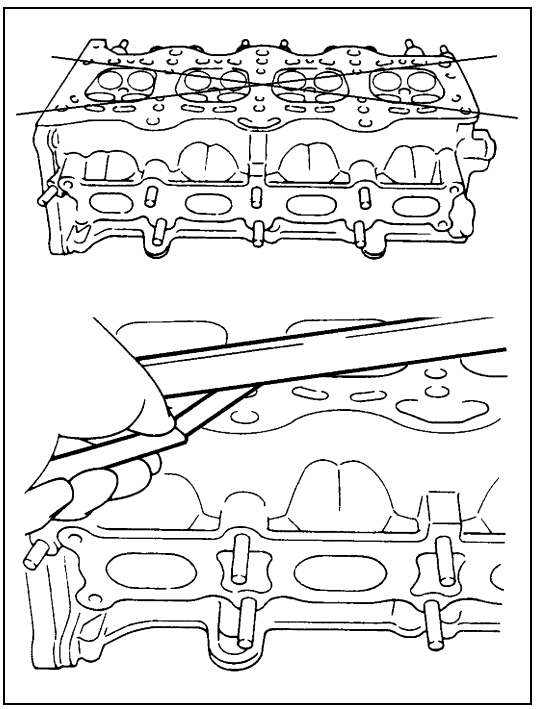

- Check cylinder head for cracks on intake and exhaust ports, combustion chambers, and head surface.
  Using a straightedge and thickness gauge, check flatness of gasketed surface at a total of 2 locations. If distortion limit, given below, is exceeded, replace cylinder head.

Limit of distortion for surface of cylinder head piston side: 0.05 mm (0.00197 in.)

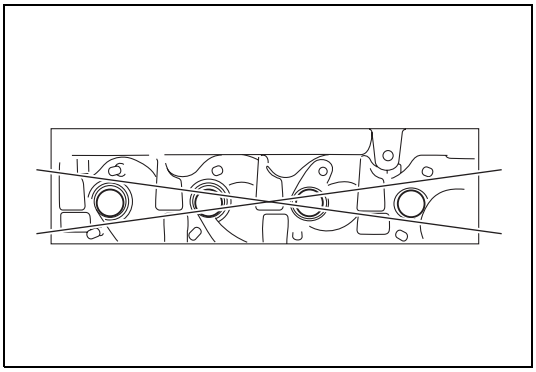

- Distortion of manifold seating faces:
  Check seating faces of cylinder head for manifolds, using a straightedge and thickness gauge, in order to determine whether these faces should be corrected or cylinder head replaced.

Limit of distortion for surface of cylinder head exhaust: manifolds sides
0.2 mm (0.008 in.)

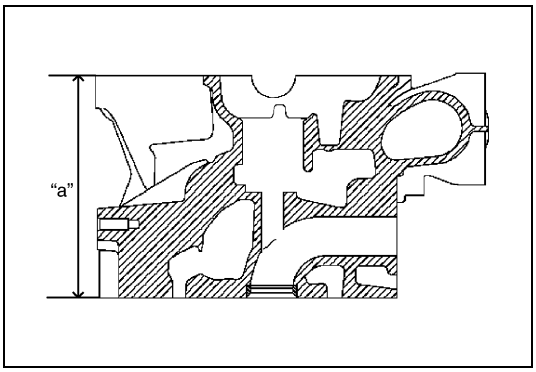

- Measure cylinder head height "a".
  If measured height is below its specification, replace cylinder head.

Cylinder head height
"a": 127 mm (5.00 in.)

Valve Springs

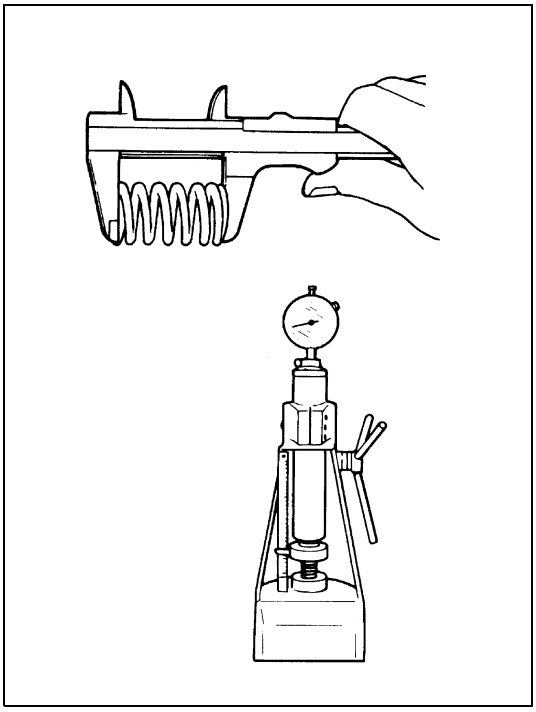

- Referring to data given below, check to be sure that each spring is in sound condition, free of any evidence of breakage or weakening. Remember, weakened valve springs can cause chatter, not to mention possibility of reducing power output due to gas leakage caused by decreased seating pressure.

Valve spring free length (In and Ex) "a":
43.31 mm (1.7051 in.)

Valve spring preload (In and Ex):
23 N (2.3 kg) for 33.80 mm (5.0 lb/ 1.3307 in.)
50 N (5.0 kg) for 24.80 mm (11.0 lb/ 0.9764 in.)

Max. Valve Lift

1) Install valve, tappet and camshaft referring to "Install" under "Valves and cylinder Head Removal and Installation" in this section.

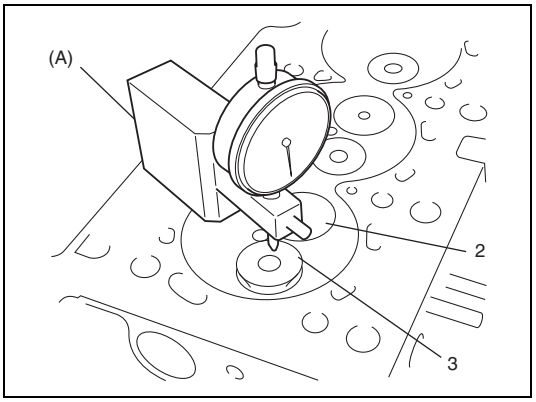

2) Measure valve lift using dial gauge as shown in figure.
If measured valve lift is found to exceed its limit, adjust valve lash (clearance) referring to “Valve Lash (Clearance)” in this section.

Special tool
(A): 09910-26510/OUT 0000005

Max. valve lift
In: 8.015 mm (0.31555 in.)
Ex: 8.595 mm (0.33839 in.)

Pistons, Piston Rings, Connecting Rods and Cylinders Components

CAUTION:
Connecting rod and connecting rod bearing must be replaced as a set when either replacement becomes necessary.

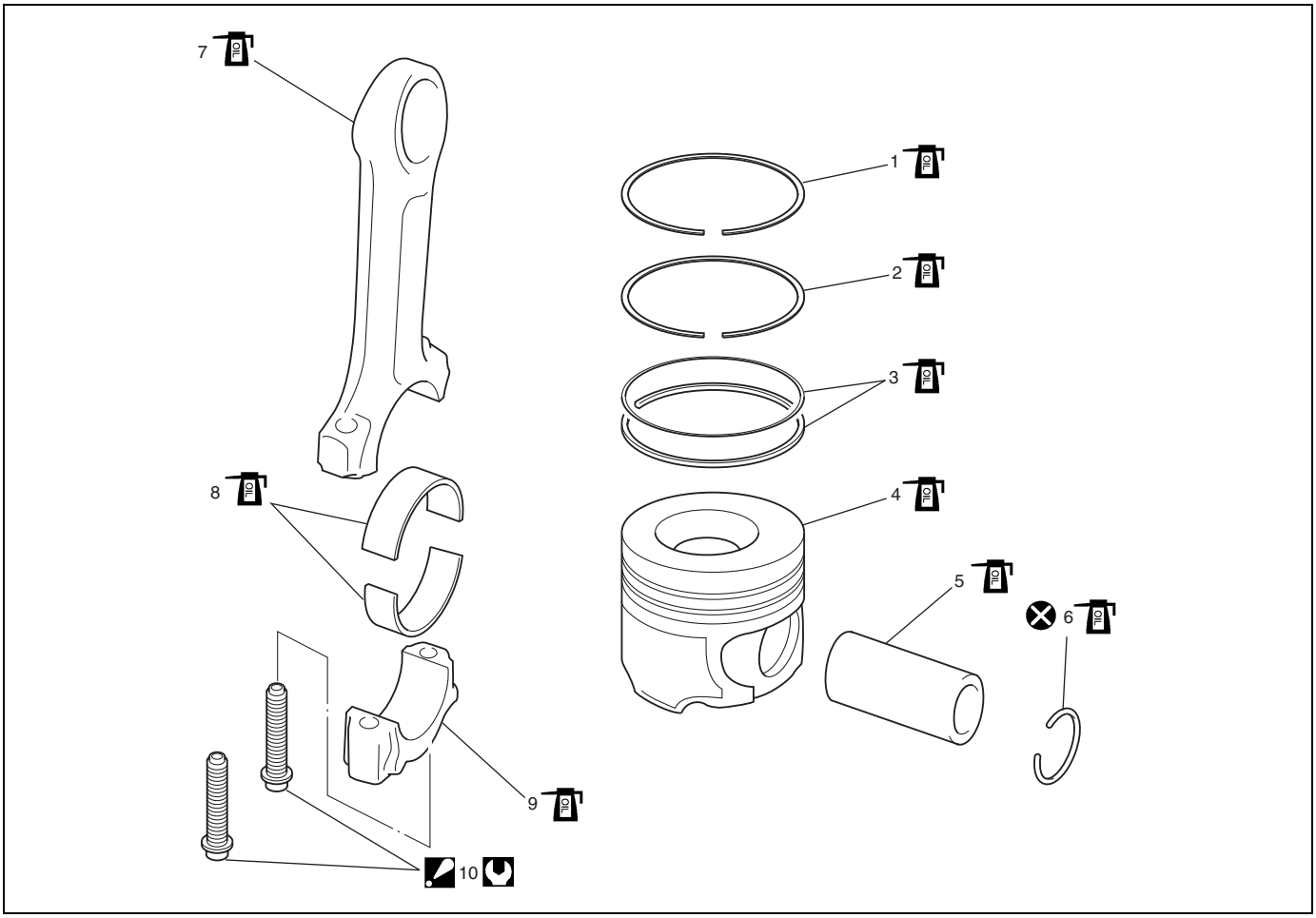

1. Top ring	5. Piston pin	9. Connecting rod bearing cap	Do not reuse.
2. 2nd ring	6. Piston pin circlip	10. Connecting rod bearing cap bolt : Tighten 20 N·m (20 kg-m, 14.5 lb-ft) and 45° by the specified.	
3. Oil ring	7. Connecting rod	Tightening Torque	
4. Piston	8. Connecting rod bearing	Apply engine oil to sliding surface of each parts.	

Pistons, Piston Rings, Connecting Rods and Cylinders Removal and Installation

CAUTION:
Connecting rod and connecting rod bearing must be replaced as a set when either replacement becomes necessary.

Removal

1) Remove engine assembly from vehicle referring to “Engine Assembly Removal and Installation” in this section.
2) Remove cylinder head referring to “Valves and Cylinder Head Removal and Installation” in this section.
3) Remove upper oil pan referring to “Oil Pan and Oil Pump Strainer Removal and Installation” in this section.
4) Remove oil pump referring to “Oil Pump and Oil Pump Chain Removal and Installation” in this section.

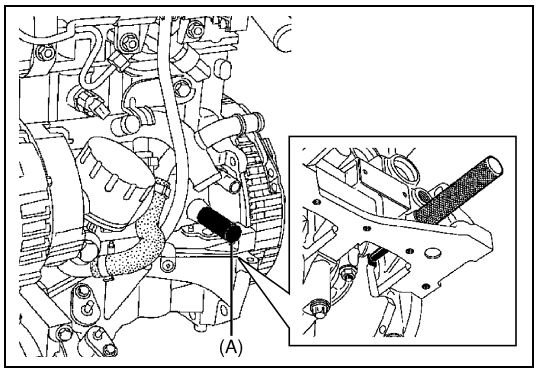

5) Remove special tool (A).

Special tool
(A): 09919-58110

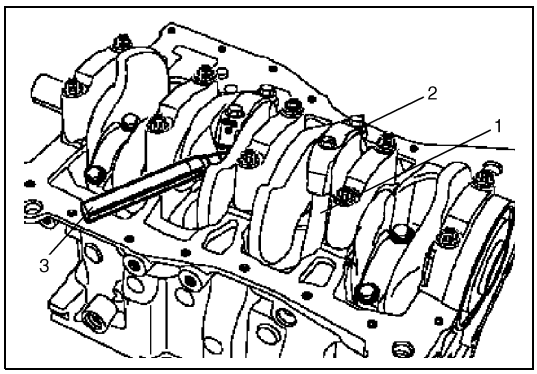

6) Mark cylinder number on all pistons, connecting rods (1) and rod bearing caps (2) using silver pencil or quick drying paint (3) for installation.
7) Remove connecting rod bearing caps.
8) Decarbon top of cylinder bore before removing piston from cylinder.
9) Push piston and connecting rod assembly out through the top of cylinder bore.

Installation

NOTE:

- **All parts to be installed must be perfectly clean.**
- **Main bearings, main bearing caps, connecting rods, connecting rod bearings, rod bearing caps, pistons and piston rings are in combination sets. Do not disturb such combination and make sure that each part goes back to where it came from, when installing.**

1) Apply engine oil to pistons, rings, cylinder walls, connecting rod bearings and crankpins.

NOTE:

Do not apply oil between connecting rod and bearing or between bearing cap and bearing.

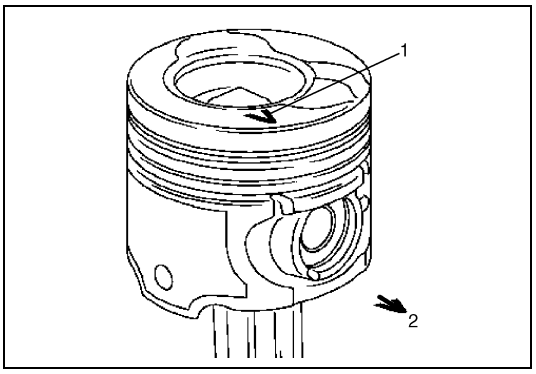

2) When installing piston and connecting rod assembly into cylinder bore, point arrow mark (1) on piston head to flywheel side (2).

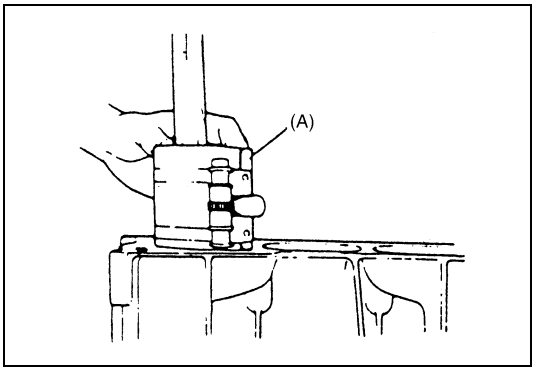

3) Install piston and connecting rod assembly into cylinder bore matching cylinder number marked in removal. Use special tool (Piston ring compressor) to compress rings. Guide connecting rod into place on crankshaft.
Using a hammer handle, tap piston head to install piston into bore. Hold ring compressor firmly against cylinder block until all piston rings have entered cylinder bore.

Special tool
(A): 09916-77310

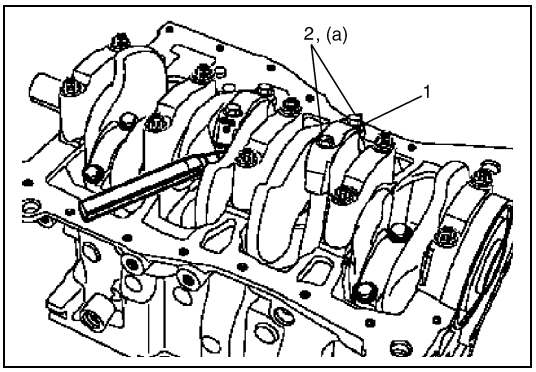

4) Install bearing cap (1) to applicable cylinder matching cylinder number marked in removal.
a) Tighten all cap bolts (2) to 20 N·m (2.0 kg-m, 14.5 lb-ft).
b) Retighten them by turning through 45°.

Tightening torque
Connecting rod bearing cap bolt (a):
Tighten 20 N·m (2.0 kg-m, 14.5 lb-ft) and 45° by the specified procedure

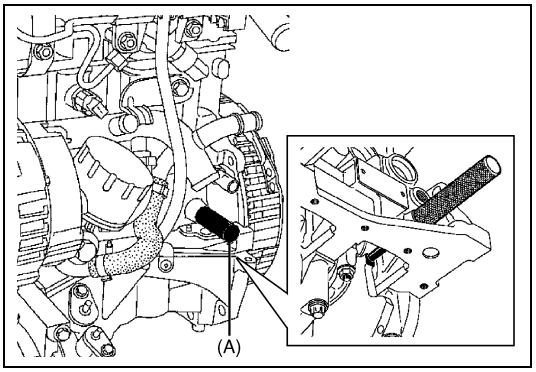

5) Insert special tool into TDC pin hole as shown in figure.
And turn crankshaft clockwise until crankshaft touches special tool.

Special tool
(A): 09919-58110

6) Install oil pump referring to “Oil Pump and Oil Pump Chain Removal and Installation” in this section.

7) Install oil pan and oil level gauge referring to “Oil pan and Oil Pump Strainer Removal and Installation” in this section.

8) Install cylinder head referring to “Valves and Cylinder Head Removal and Installation” in this section.
9) Install engine assembly to vehicle referring to “Engine Assembly Removal and Installation” in this section.

Pistons, Piston Rings, Connecting Rods and Cylinders Disassembly and Reassembly

Disassembly

1) Using piston ring expander, remove top and 2nd compression rings and oil ring from piston.

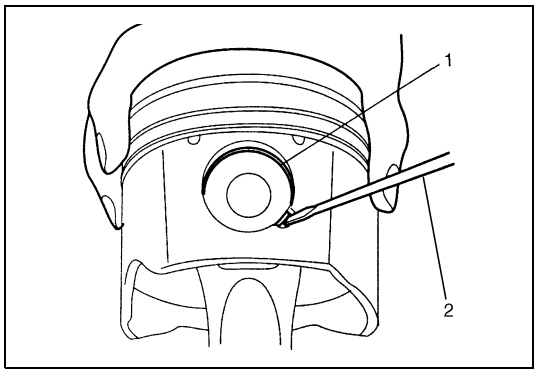

2) Remove piston pin from connecting rod as follows.
   a) Using flat head screw driver (2) or the like, remove piston pin circlips (1) as shown.

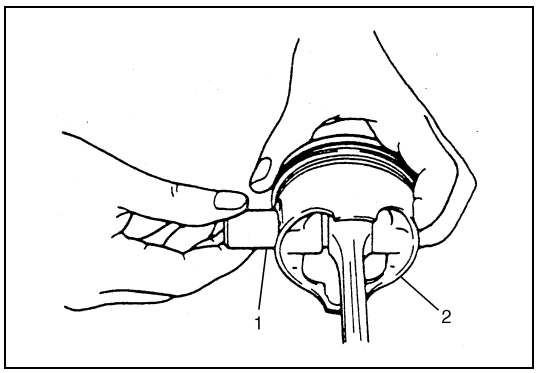

   b) Remove piston pin (1) from piston (2).

Reassembly

NOTE:

Whenever piston is replaced, select applicable piston referring to “Selection of Piston” under “Pistons, Piston Rings, Connecting Rods and Cylinder Inspection” in this section.

1) Clean carbon from piston head and ring grooves using a suitable tool.

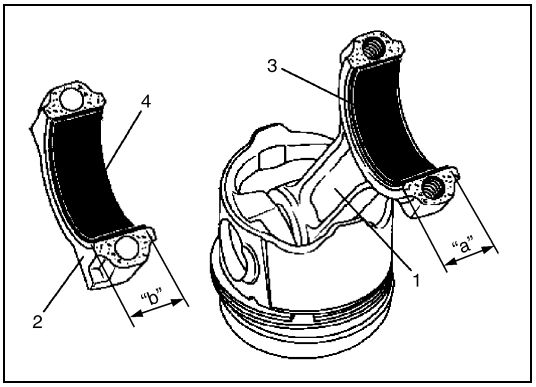

2) Install connecting rod bearings (3) to connecting rod (1) and bearing cap (2) as follows.
   a) Distinguish connecting rod bearing between connecting rod side connecting rod bearing and bearing side connecting rod bearing (4) measuring its width before installing.

Connecting rod side connecting rod bearing width "a": 20.500 – 20.750 mm (0.80709 – 0.81692 in.)

Bearing cap side connecting rod bearing width "b": 17.500 – 17.750 mm (0.68898 – 0.69881 in.)

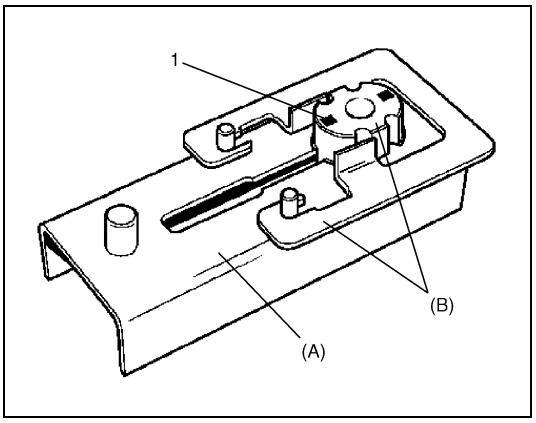

b) Install special tool (B) to special tool (A).

NOTE:

Be sure to install special tool (B) to specified direction as shown.

Special tool
(A): 09913-98110
(B): 09913-88110

1. Mark "B"

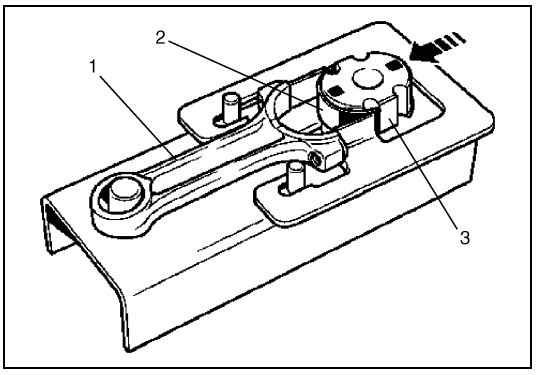

c) Install connecting rod (1) and connecting rod bearing to special tool (A and B) as shown.
d) Install connecting rod bearing to connecting rod pushing special tool (B) as shown.

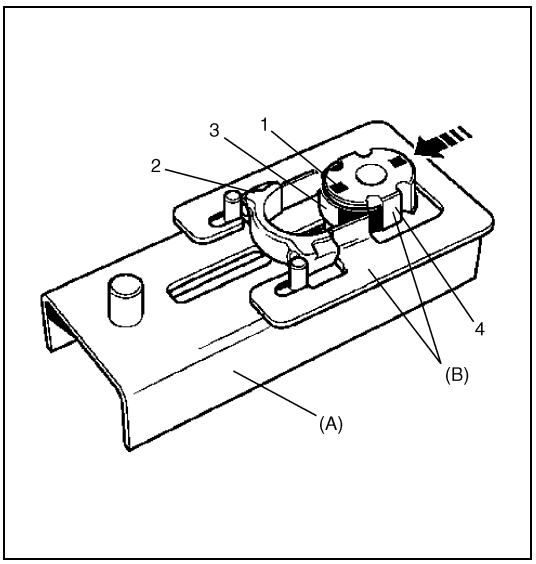

e) Install special tool (B) to special tool (A).

NOTE:

Be sure to install special tool (B) to specified direction as shown.

Special tool
(A): 09913-98110
(B): 09913-88110

f) Install bearing cap (2) and connecting rod bearing to special tool (A and B) as shown.
g) Install connecting rod bearing to bearing cap pushing special tool (B) as shown.

1. Mark "A"

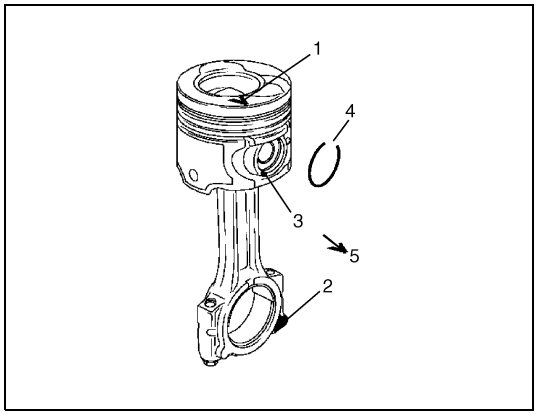

3) Install piston pin to piston and connecting rod as follows.
   a) After applying engine oil to piston pin and piston pin holes in piston and connecting rod, fit connecting rod to piston so that flat part (2) of connecting rod bearing and arrow mark (1) come on the same side, and insert piston pin to piston and connecting rod.
   b) Install piston pin circlips.
   c) Position opening of piston pin circlip to opposite side of removal and fitting channel (4).

5. Flywheel side

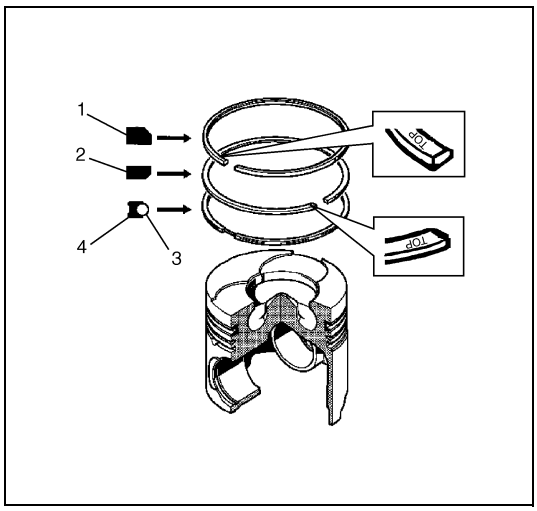

4) Install piston rings to piston noting the following.

NOTE:

- **As indicated in figure, 1st and 2nd rings have "TOP" mark respectively. When installing these piston rings to piston, direct marked side of each ring toward top of piston.**
- **1st ring (1) differs from 2nd ring (2) in thickness and shape.**
  Distinguish 1st ring from 2nd ring by referring to figure.
- **When installing oil ring, install spiral ring (3) first and then rail (4).**

Pistons, Piston Rings, Connecting Rods and Cylinders Inspection

Cylinders

- Inspect cylinder walls for scratches, roughness or ridges which indicate excessive wear. If cylinder bore is very rough, deeply scratched or ridged, replace cylinder block.

Pistons

- Inspect piston for faults, cracks or other damaged.
  Damaged or faulty piston should be replaced.

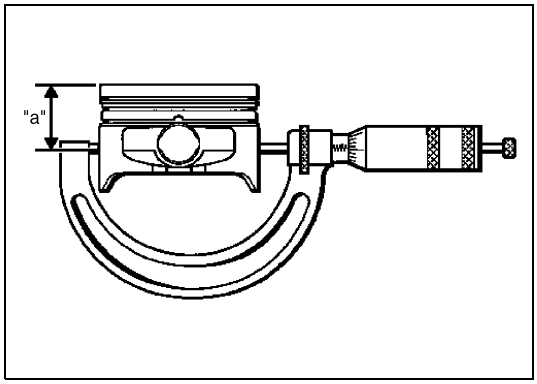

- Piston diameter:
  As indicated in figure, piston diameter should be measured at a position "a" from piston top in the direction perpendicular to piston pin.

Piston diameter specification:
75.933 – 75.947 mm (2.98949 – 2.99003 in.)

"a": 56.0 mm (2.205 in.)

Piston Pin

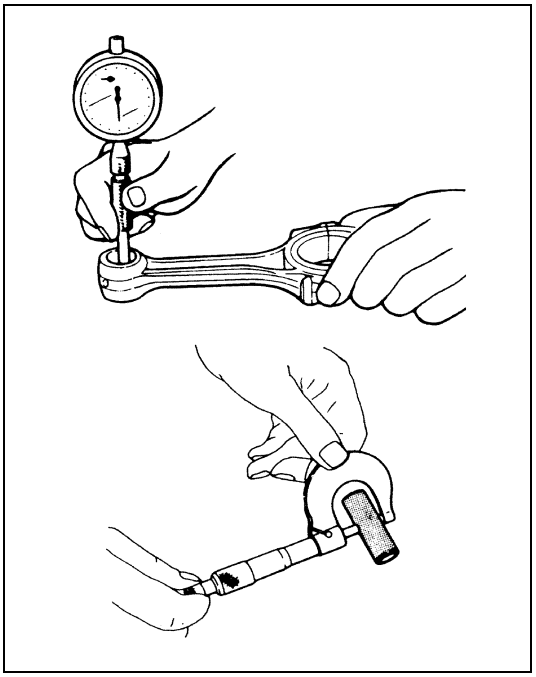

- Check piston pin, connecting rod small end bore and piston bore for wear or damage, paying particular attention to condition of small end bore bush. If pin, connecting rod small end bore or piston bore is badly worn or damaged, replace pin, connecting rod and/or piston.
- Piston pin clearance:
  Check piston pin clearance in small end and piston. Replace connecting rod and/or piston if its small-end is badly worn or damaged or if measured clearance out of specification.

Clearance between small-end and piston pin:
0.013 – 0.030 mm (0.00052 – 0.00118 in.)

Small-end bore for connecting rod:
26.013 – 26.025 mm (1.02414 – 1.02460 in.)

Piston pin outside diameter:
25.995 – 26.000 mm (1.02343 – 1.02362 in.)

Piston Rings

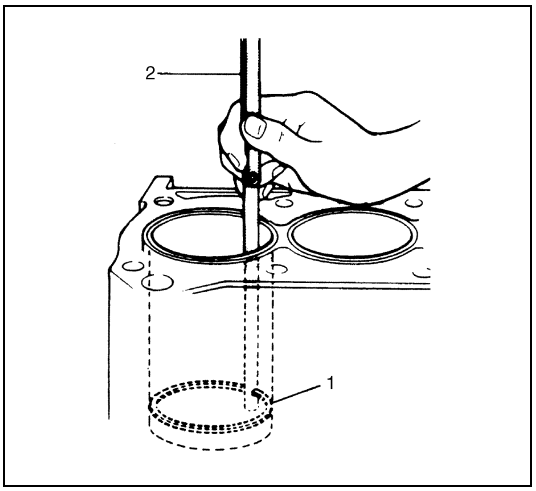

- Piston ring end gap
  To measure end gap, insert piston ring (1) into cylinder bore and then measure the gap by using thickness gauge (2).
  If measured gap is out of specification, replace ring.

NOTE:

Decarbonize and clean top of cylinder bore before inserting piston ring.

Piston ring end gap
Top ring: 0.20 – 0.35 mm (0.0079 – 0.0137 in.)
2nd ring: 0.70 – 0.90 mm (0.0276 – 0.0354 in.)
Oil ring: 0.25 – 0.50 mm (0.0099 – 0.0196 in.)

- Piston ring thickness
  Measure piston ring thickness. If measured thickness is out of specification, replace piston ring.

Piston ring thickness
Top ring: 1.97 – 1.99 mm (0.0776 – 0.0783 in.)
2nd ring: 1.97 – 1.99 mm (0.0776 – 0.0783 in.)
Oil ring: 2.47 – 2.49 mm (0.0973 – 0.0980 in.)

Connecting Rod

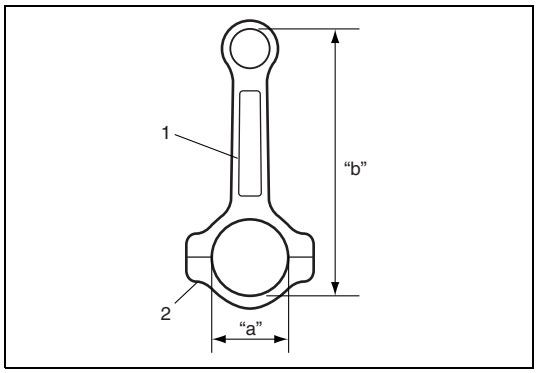

- Connecting rod big end bore and length.

a) Install bearing cap (2) to connecting rod (1).
b) Measure connecting rod big end bore and length.
If measured bore and length is out of specification, replace connecting rod.

Big end bore "a":
47.610 – 47.628 mm (1.87441 – 1.87511 in.)

Connecting rod length "b":
170.56 – 170.57 mm (6.7150 – 6.7153 in.)

- Connecting rod big end thrust play

a) Install connecting rod referring to "Installation" under "Pistons, Piston Rings, Connecting rods and Cylinders" in this section.

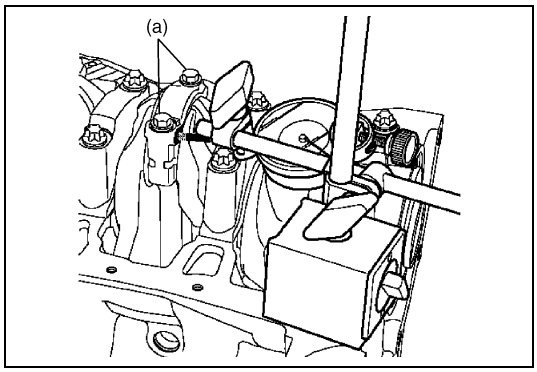

b) Check big-end of connecting rod for thrust play with rod fitted and connected to its crank pin in the normal manner.
If measured thrust play is out of specification, replace connecting rod.

Connecting rod big end thrust play:
0.205 – 0.467 mm (0.00807 – 0.01838 in.)

Crank Pin and Connecting Rod Bearings

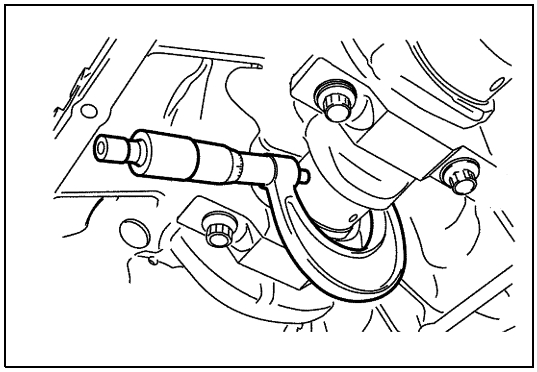

- Inspect crank pin for uneven wear or damage. Measure crank pin for crank pin diameter using a micrometer. If crank pin is damaged or crank pin diameter is out of specification, replace crankshaft.

Crank pin diameter:
43.960 – 43.980 mm (1.73071 – 1.73150 in.)

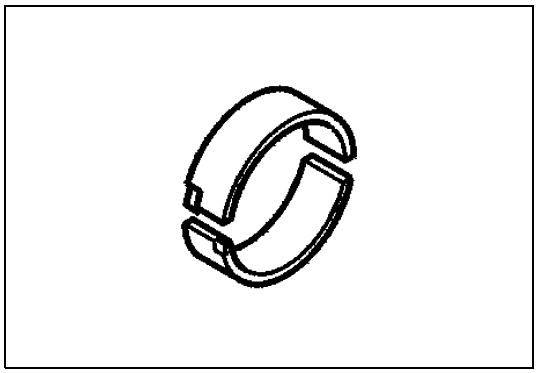

- Rod bearing:
Inspect bearing shells for signs of fusion, pitting, burn or flaking and observe contact pattern. Bearing shells found in defective condition must be replaced.

- Rod bearing clearance:

NOTE:

Do not rotate crankshaft while gauging plastic is installed.

a) Before checking bearing clearance, clean bearing and crank pin.
b) Install bearing in connecting rod and bearing cap referring to “Reassembly” under “Pistons, Piston Rings, Connecting Rods and Cylinders Disassembly and Reassembly” in this section.

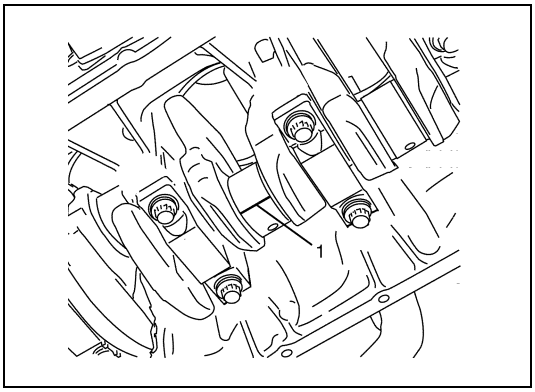

c) Place a piece of gauging plastic (1) to full width of crank pin as contacted by bearing (parallel to crankshaft), avoiding oil hole.
d) Install connecting rod and bearing cap referring to “Installation” under “Pistons, Piston Rings, Connecting rods and Cylinders” in this section.

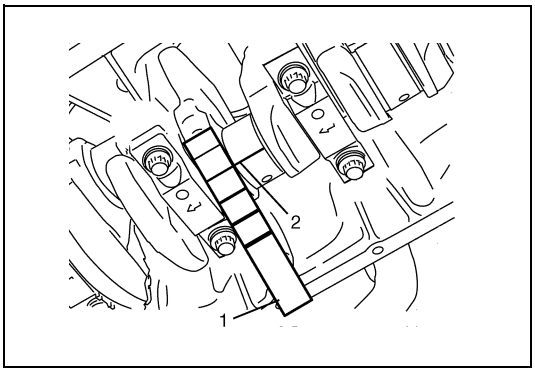

e) Using a scale (1) on gauging plastic (2) envelope, measure gauging plastic width at the widest point (clearance) after removing cap.
If clearance is out of specification, use a new bearing and remeasure clearance.

Connecting rod bearing clearance:
0.010 – 0.064 mm (0.0004 – 0.0025 in.)

Selection of Piston

1) Install piston and connecting rod referring to “Installation” under “Pistons, Piston Rings, Connecting rods and Cylinders” in this section.

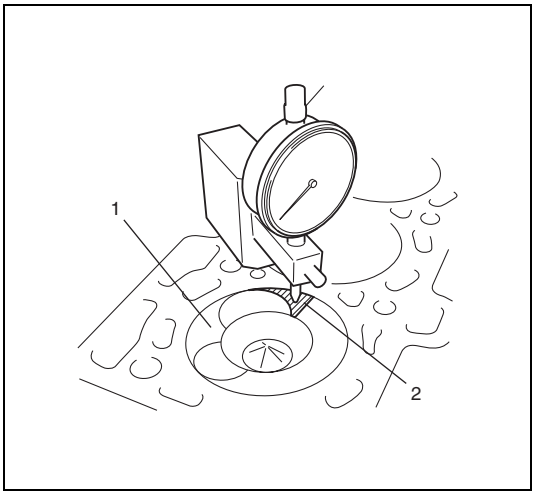

2) Using special tool and dial gauge, measure piston protrusion at specified measurement position (2) as shown in figure when piston (1) reaches top dead center. Repeat this procedure with each piston.
If piston protrusion is out of specification, proceed to next step.

Piston protrusion “a”:
0.75 – 0.81 mm (0.0295 – 0.0319 in.)

3) Check connecting rod length referring to “Connecting Rod” under “Piston, Piston Rings, Connecting Rod and Cylinders Inspection” in this section.
If connecting rod is normal, proceed to next step.

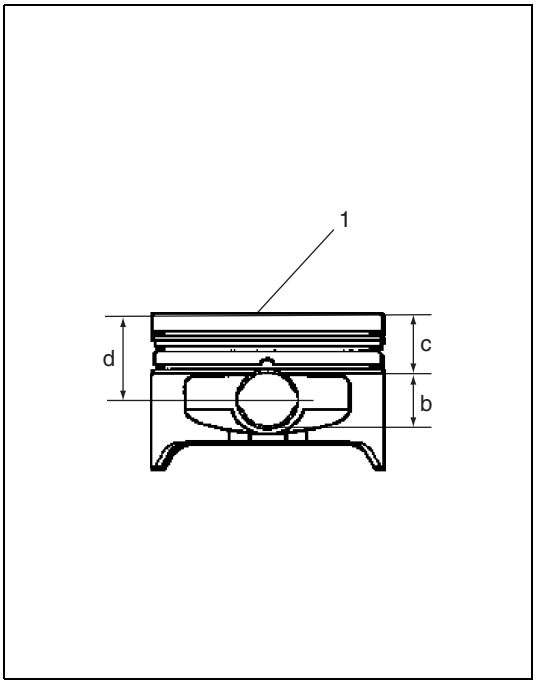

4) Replace piston (1) as follows in order to adjust piston protrusion to specified value.
   a) Remove piston, and measure the following specification.
   - Piston pin diameter "b"
   - Distance "c" between top of piston and top of piston pin hole

   b) Obtain distance "d" between top of piston and center of piston pin hole by the following equation.

   "d"= "b"/2 + "c"

   c) Using measured piston protrusion "a" at step 2), obtain adjusting distance "e'" by the following equation.

   "e'" = "d" + 0.78 mm (0.0307 in.) - "a"

Example:
When distance "d" of removed piston is 41.647 mm (1.63965 in.), and measured piston protrusion "a" is 0.70 mm (0.0276 in.).
Calculated adjusting distance "e" = 41.647 mm (1.63965 in.) + 0.78 mm (0.0307 in.) – 0.70 mm (0.0276 in.) = 41.727 mm (1.64280 in.)

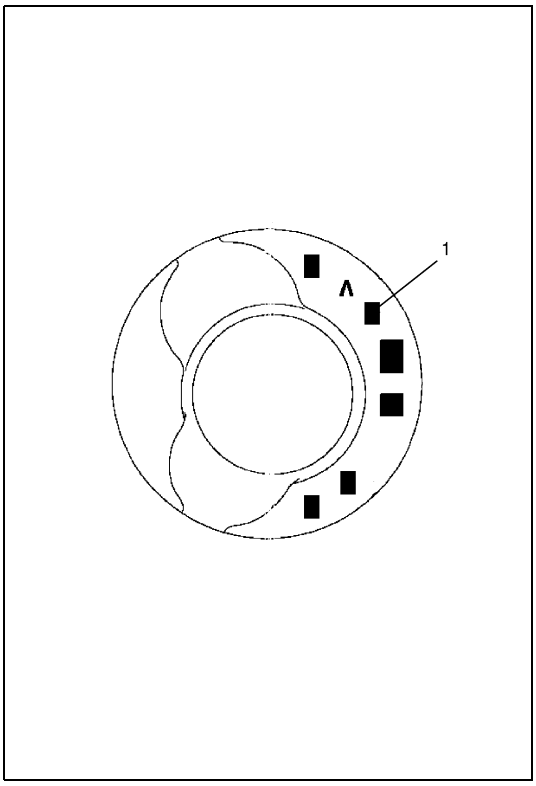

   d) Select new piston so that distance "e" is within range of distance "d" of new piston.

Available new piston class

Piston class (1)	Distance "d"
K	41.647 – 41.687 mm (1.63965 – 1.64122 in.)
L	41.689 – 41.729 mm (1.64130 – 1.64287 in.)
M	41.731 – 41.771 mm (1.64296 – 1.64452 in.)
N	41.773 – 41.813 mm (1.64461 – 1.64618 in.)
P	41.815 – 41.855 mm (1.64626 – 1.64783 in.)

NOTE:
- **Piston class (1) is marked on piston top as shown in figure.**
- **Supplied piston is only K, L, M and N classes. If selected piston is P class, N class piston must be installed as a replacement.**

   e) Replace removed piston to selected piston.
   f) Check piston protrusion, again.

Main Bearings, Crankshaft and Cylinder Block Components

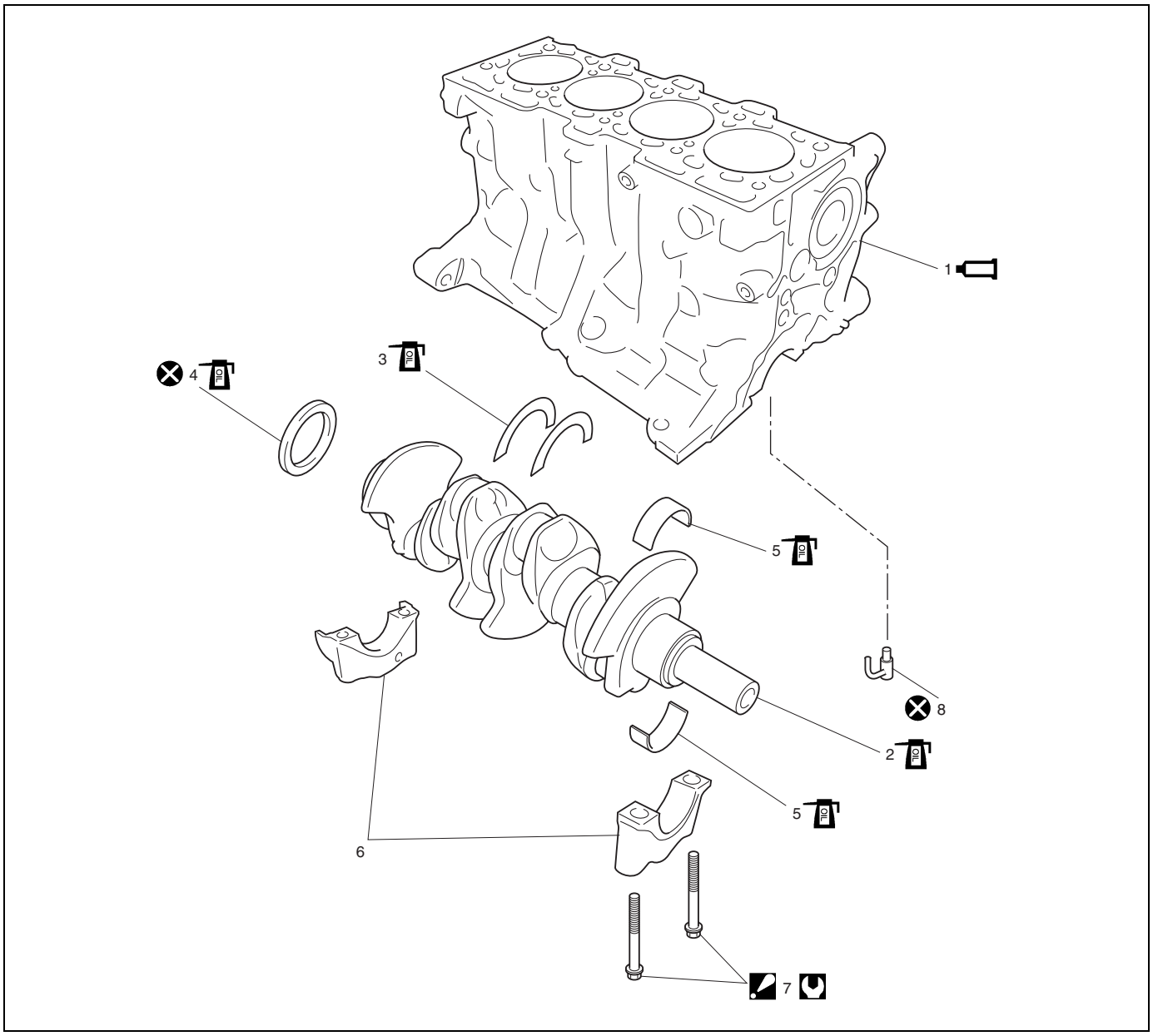

	1. Cylinder block : Apply sealant RHODORSEAL 5661® referring to "Installation" under "Main Bearings, Crankshaft and Cylinder Block Removal and Installation".		5. Main bearing : Apply engine oil to bearing inside surfaces.		Tightening Torque
	2. Crankshaft : Apply engine oil to sliding surface.		6. Main bearing cap		Do not reuse.
	3. Thrust bearing : Apply engine oil to sliding surface.		7. Main bearing cap bolt : Tighten 25 N·m (2.5 kg-m, 18.0 lb-ft) and 47° by the specified.		
	4. Flywheel side crankshaft oil seal : Apply engine oil to oil seal lip.		8. Oil jet		

Main Bearings, Crankshaft and Cylinder Block Removal and Installation

Removal

1) Remove engine assembly from vehicle referring to "Engine Assembly Removal and Installation" in this section.

2) Remove oil pan and oil pump strainer referring to “Oil Pan and Oil Pump Strainer Removal and Installation” in this section.
3) Remove exhaust manifold referring to “Exhaust Manifold Removal and Installation” in this section.
4) Remove cylinder head cover referring to “Cylinder Head Cover Removal and Installation” in this section.
5) Remove timing belt, belt tensioner, crankshaft pulley and timing belt cover referring to “Timing Belt and Belt Tensioner Removal and Installation” in this section.
6) Remove heat exchanger referring to “Heat Exchanger Removal and Installation” in this section.
7) Remove oil pump, oil pump drive sprocket and gasket holder plate referring to “Oil Pump Removal and Installation” in this section.
8) Remove power steering pump referring to “Power Steering (P/S) Pump” in Section 3B1.
9) Remove camshaft referring to “Camshaft and Tappet Removal and Installation” in this section.
10) Remove cylinder head assembly referring to “Valve and Cylinder Head Removal and Installation” in this section.
11) Remove piston and connection rod referring to “Piston, Piston Rings, Connecting Rods, Connecting Rods and Cylinders Removal and Installation” in this section.
12) Remove clutch cover, clutch disc and flywheel referring to “Clutch Cover, Clutch Disc, Flywheel and Release Bearing Removal and Installation” in Section 7C2.

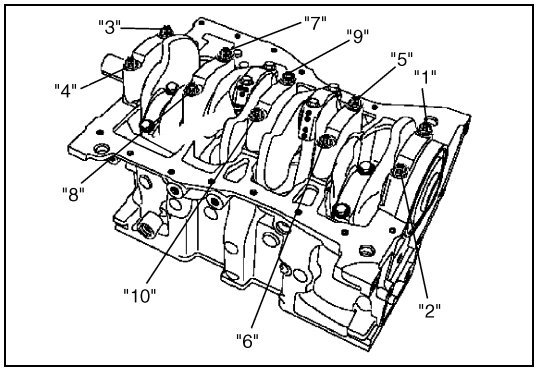

13) Loosen crankshaft bearing cap bolts in such order as indicated in figure a little at a time, and remove bearing caps.
14) Remove crankshaft from cylinder block.
15) Remove flywheel side crankshaft oil seal from crankshaft.

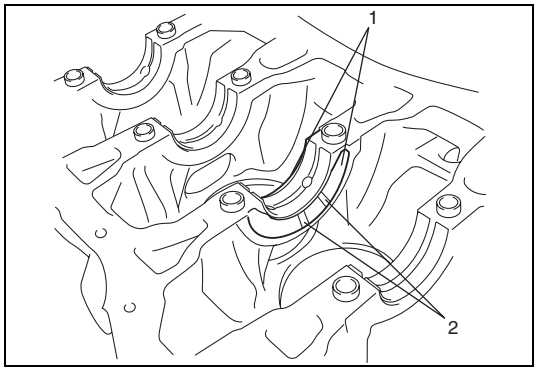

16) Remove main bearings (1) and thrust bearings (2).

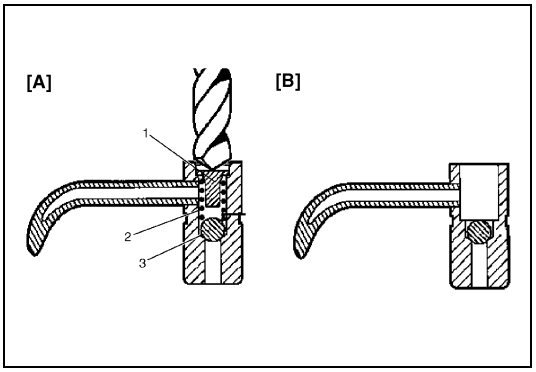

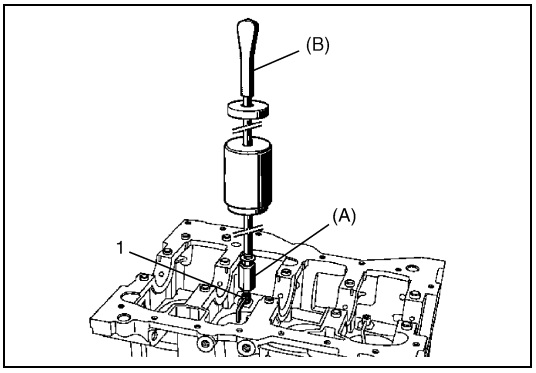

17) Remove oil jet as follows, if necessary.
   a) Pack rag into cylinder to prevent swarf from entering.
   b) Remove spring stop (1) and spring (2) using 7 mm (0.28 in.) diameter drill (4).

CAUTION:
Do not remove ball (3) to prevent swarf from entering cooling circuit.

   c) Desorb swarf from cylinder and oil jet.

   d) Install special tool (A) to drilled hole of oil jet (1).
   e) Remove oil jet from cylinder using special tools (A and B).

Special tool
(A): 09916-48120
(B): 09916-58120

Installation

NOTE:

- **Whenever crankshaft and cylinder block replaced, select applicable piston referring to "Selection of Piston" under "Pistons, Piston Rings, Connecting Rods and Cylinder Inspection" in this section.**
- **All parts to be installed must be perfectly clean.**
- **Be sure to apply oil to crankshaft journals, main bearings and thrust bearings.**
- **Main bearings, main bearing caps, connecting rods, connecting rod bearings, rod bearing caps, pistons and piston rings are in combination sets. Do not disturb such combination and make sure that each part goes back to where it came from, when installing.**

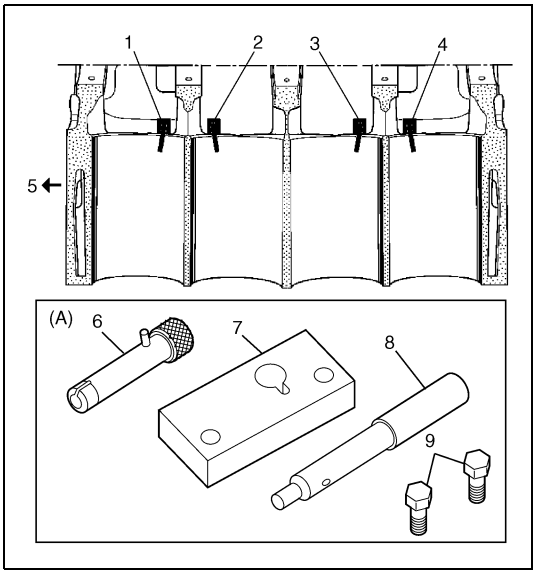

1) Using special tool, install oil jet to cylinder block as follows, if removed.

Special tool
(A): 09916-58110

1.	Oil jet No.1
2.	Oil jet No.2
3.	Oil jet No.3
4.	Oil jet No.4
5.	Flywheel side
6.	Push rod
7.	Plate
8.	Guide rod
9.	Plate bolt

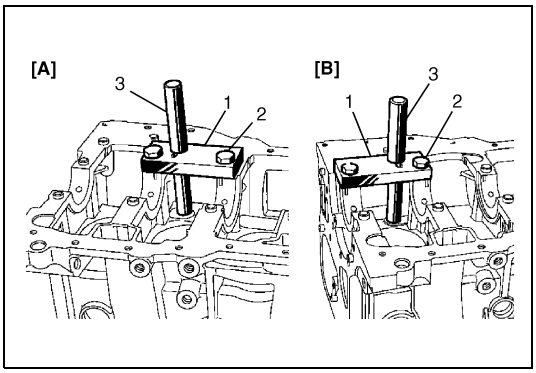

a) Install plate (1) to cylinder block tightening plate bolts (2) by hand.
b) Install guide rod (3) to plate aligning guide rod end with oil jet hole.
c) Tighten plate bolts, and remove guide rod.

[A]:	Oil jet No.2 and 4
[B]:	Oil jet No.1 and 3

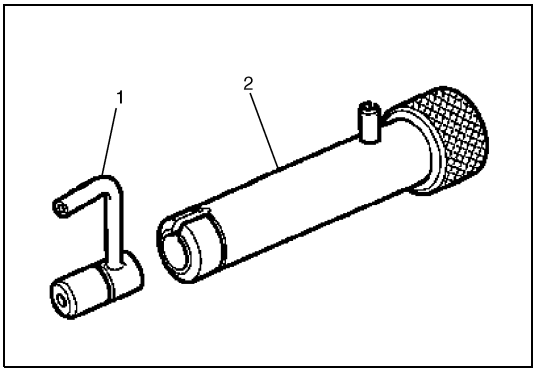

d) Insert oil jet (1) into push rod (2) facing oil jet with center of cylinder.

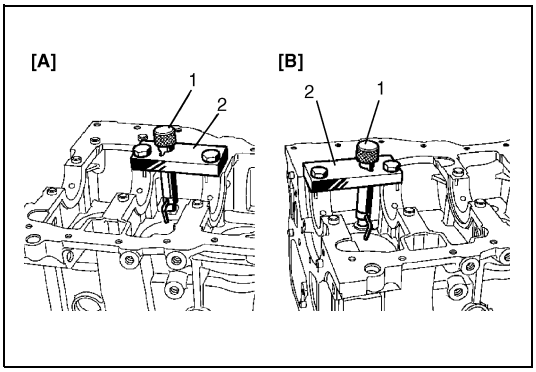

e) Using hammer, tap push rod until push rod (1) comes into contact with plate (2).
f) Remove special tool.

[A]:	Oil jet No.2 and 4
[B]:	Oil jet No.1 and 3

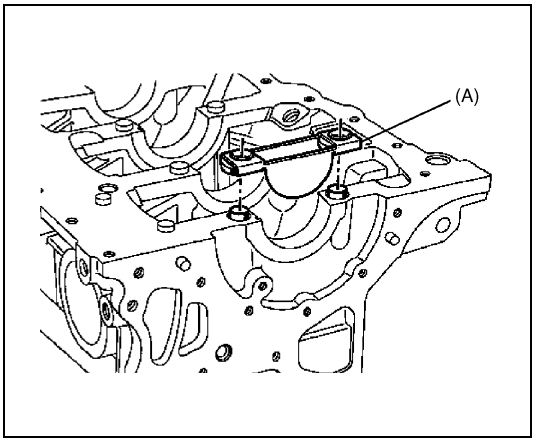

2) Using special tool, install main bearing to cylinder block and bearing cap as follows.

NOTE:

One of two halves of main bearing has oil groove. Install main bearing with oil grove to cylinder block, and the other one without oil groove to bearing cap.

Special tool
(A): 09913-78110

a) Install special tool (A) to cylinder block.

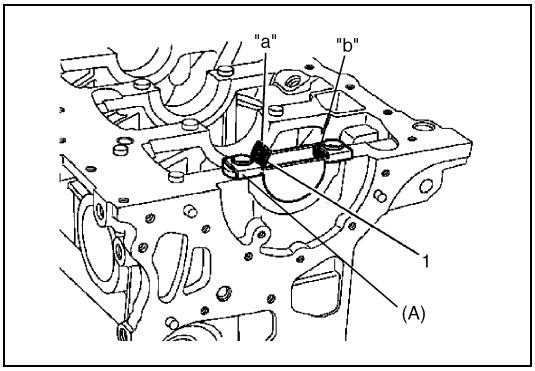

b) Fit main bearing (1) in special tool (A) as shown, and then press at “a” until main bearing is touched at “b”.

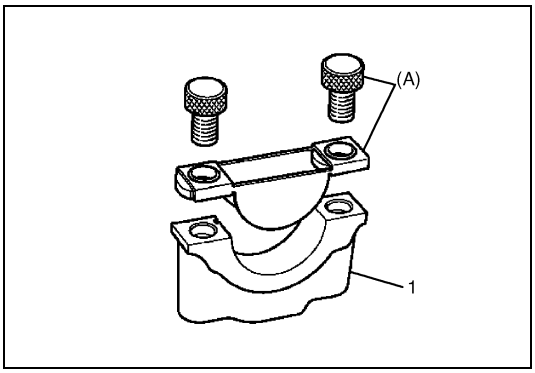

c) Install special tool (A) to bearing cap (1).

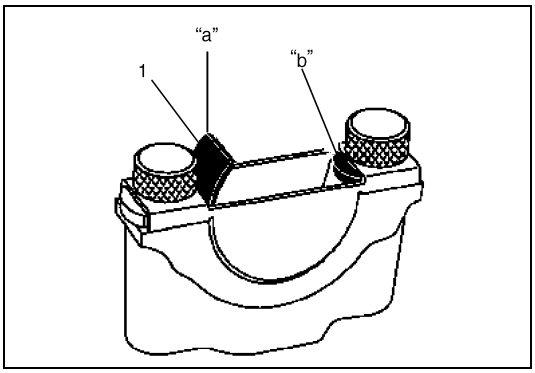

d) Fit main bearing (1) in special tool (A) as shown, and then press at “a” until main bearing is touched at “b”.

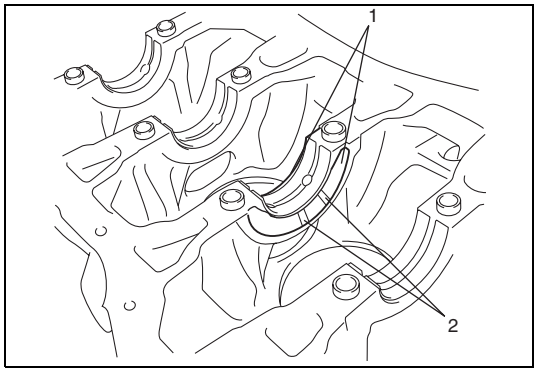

3) Install thrust bearings (1) to center of crankshaft journal facing its oil groove (2) to outside.
4) Install crankshaft to cylinder block.

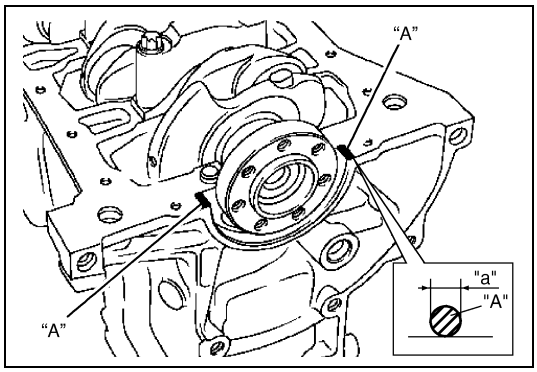

5) Apply sealant to cylinder block as shown in figure.

"A": RHODORSEAL 5661®

"a": 4 mm (0.16 in.)

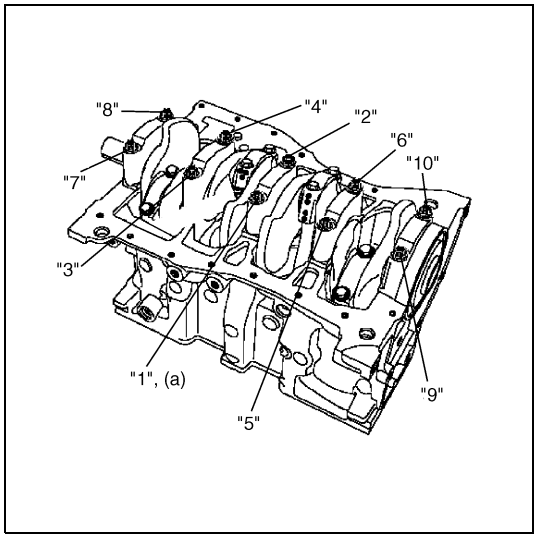

6) Install main bearing caps in proper position matching cylinder number marked in removal.
7) Tighten main bearing cap bolts as follows.
   a) Tighten bolts to 25 N·m (2.5 kg-m, 18.0 lb-ft).
   b) Retighten them by turning through 47°.

Tightening torque
Crankshaft main bearing cap bolt (a):
Tighten 25 N·m (2.5 kg-m, 18.0 lb-ft) and 47° by the specified procedure

NOTE:

After tightening cap bolts, check to be sure that crankshaft rotates smoothly.

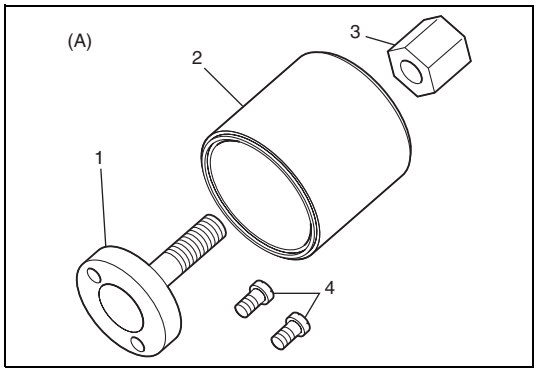

8) Using special tool, install flywheel side oil seal as follows.

CAUTION:

Do not touch oil seal so that it is extremely fragile. Whenever installing new oil seal, it must be installed using special tool (A) and protector supplied with new oil seal. If it doesn't follow the above-mentioned service, it may cause oil leak from oil seal.

Special tool
(A): 09911-98110

1. Fitting
2. Installer
3. Nut
4. Screw

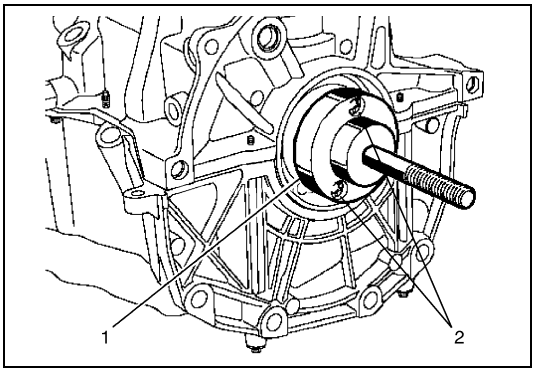

a) Install fitting (1) and screw (2) to crankshaft.

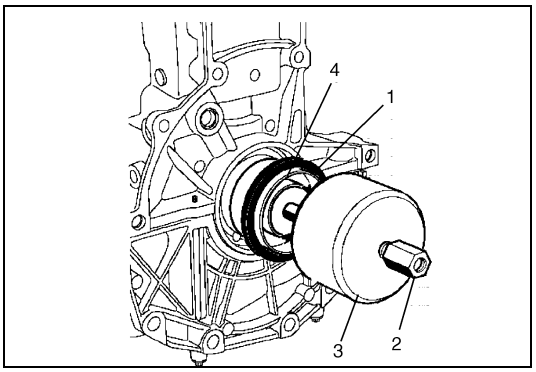

b) Install protector (4) together with new oil seal (1) to fitting by tightening nut (2) until installer (3) comes into contact with cylinder block.
c) Remove special tool and protector.

9) Install piston and connecting rod referring to “Piston, Piston Rings, Connecting Rods and Cylinders Removal and Installation” in this section.
10) Install oil pump, oil pump drive sprocket and gasket holder plate referring to “Oil Pump Removal and Installation” in this section.
11) Install oil pan and oil pump strainer referring to “Oil Pan and Oil Pump Strainer Removal and Installation” in this section.
12) Install cylinder head assembly referring to “Valve and Cylinder Head Removal and Installation” in this section.
13) Install camshaft referring to “Camshaft and Valve Tappet Removal and Installation” in this section.
14) Install timing belt, belt tensioner, crankshaft timing sprocket and timing belt cover referring to “Timing Belt and Belt Tensioner Removal and Installation” in this section.
15) Install cylinder head cover referring to “Cylinder Head Cover Removal and Installation” in this section.
16) Install flywheel referring to “Clutch Cover, Clutch Disc, Flywheel and Release Bearing Removal and Installation” in Section 7C2.
17) Install exhaust manifold referring to “Exhaust Manifold Removal and Installation” in this section.
18) Install turbocharger referring to Turbocharger Removal and Installation” in this section.
19) Install clutch to flywheel referring to “Clutch Cover, Clutch Disc, Flywheel and Release Bearing Removal and Installation” in Section 7C2.

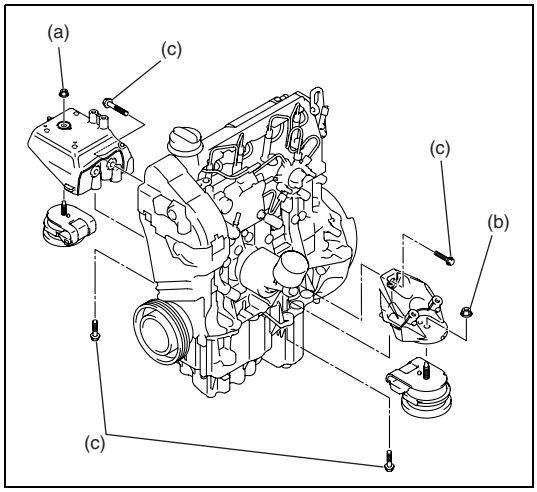

20) Install engine mounting brackets.

Tightening torque
Engine right mounting nut (a):
55 N·m (5.5 kg-m, 40.0 lb-ft)
Engine left mounting nut (b):
40 N·m (4.0 kg-m, 29.0 lb-ft)
Engine side mounting bracket bolt (c):
40 N·m (4.0 kg-m, 29.0 lb-ft)

21) Install engine assembly to vehicle referring to “Engine Assembly” in this section.

Main Bearings, Crankshaft and Cylinder Block Inspection

Crankshaft Thrust Play

1) Install main bearing, thrust bearing, crankshaft and main bearing cap referring to “Main Bearings, Crankshaft and Cylinder Block Removal and Installation” in this section.

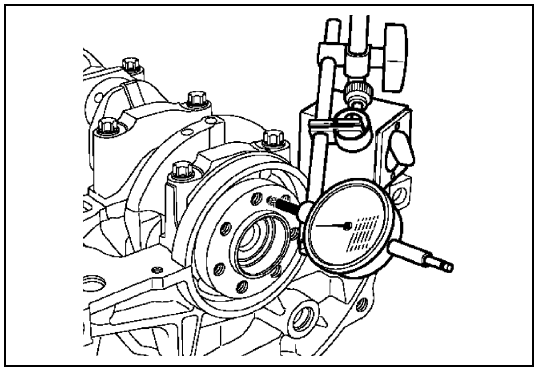

2) Use a dial gauge to read displacement in axial (thrust) direction of crankshaft.
If measured value is out of specification, replace thrust bearing.

Crankshaft thrust play
New thrust bearing:
0.045 – 0.252 mm (0.00178 – 0.00992 in.)

Reused thrust bearing:
0.045 – 0.852 mm (0.00178 – 0.03354 in.)

Crankshaft

Crankshaft journal

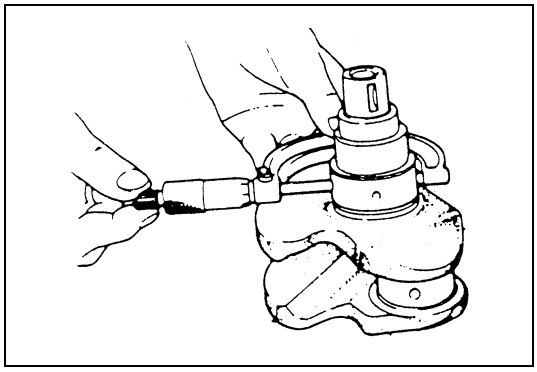

- Inspect crankshaft journal for uneven wear or damage. Measure crankshaft journal diameter using a micrometer. If crankshaft journal is damaged or diameter is out of specification, replace crankshaft.

Crankshaft journal diameter:
47.990 – 48.010 (1.88937 – 1.89015 in.)

Crankshaft journal bore

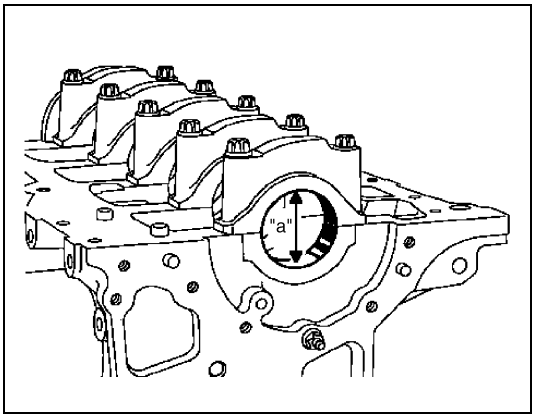

- Inspect crankshaft journal bore for uneven wear or damage. Measure crankshaft journal bore. If crankshaft journal bore is damaged or diameter is out of specification, replace cylinder block.

Crankshaft journal bore diameter “a”:
51.936 – 51.949 mm (2.04473 – 2.04523 in.)

Main Bearing

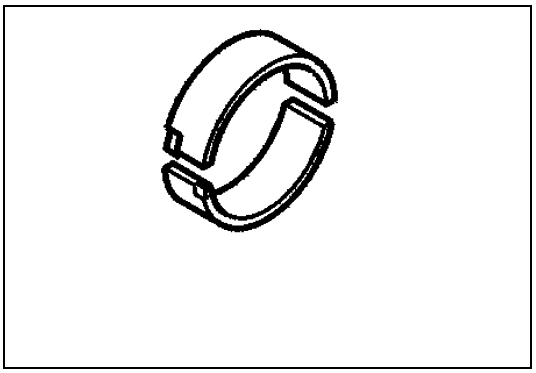

- Inspect bearing shells for signs of fusion, pitting, burn or flaking and observe contact pattern. Bearing shells found in defective condition must be replaced.

Main bearing thickness “a”:
1.949 – 1.959 mm (0.07674 – 0.07712 in.)

Main bearing clearance

NOTE:

Do not rotate crankshaft while gauging plastic is installed.

1) Before checking bearing clearance, clean bearing and crankshaft journal.
2) Install bearing to cylinder block and main bearing cap referring to “Main Bearings, Crankshaft and Cylinder Block Removal and Installation” in this section.

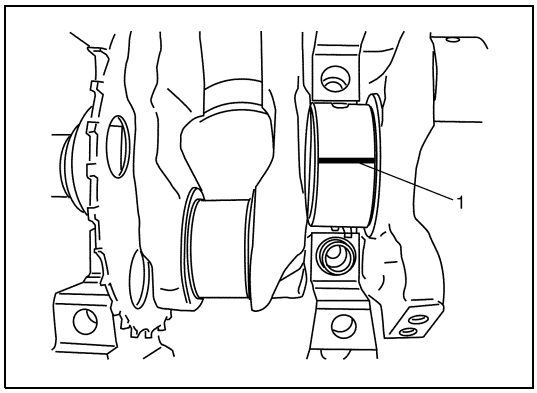

3) Place a piece of gauging plastic (1) to full width of crankshaft journal as contacted by bearing (parallel to crankshaft), avoiding oil hole.
4) Install main bearing cap referring to “Main Bearings, Crankshaft and Cylinder Block Removal and Installation” in this section.

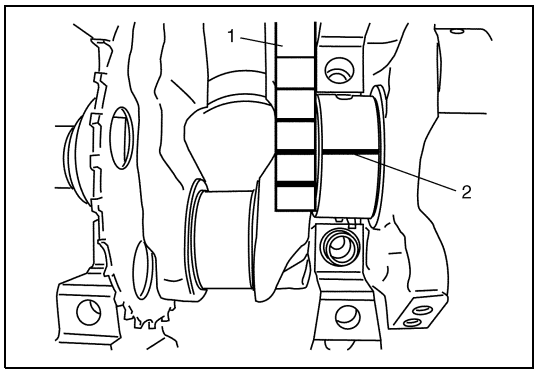

5) Remove cap and using a scale (1) on gauging plastic (2) envelope, measure gauging plastic width at the widest point (clearance).
   If clearance is out of specification, use a new bearing and remeasure clearance.

Crankshaft journal clearance:
0.027 – 0.054 mm (0.00107 – 0.00213 in.)

Visual inspection

Check bearings for pitting, scratches, wear or damage.
If any malcondition is found, replace both upper and lower halves.
Never replace one half without replacing the other half.

Cylinder Block

Distortion of gasketed surface

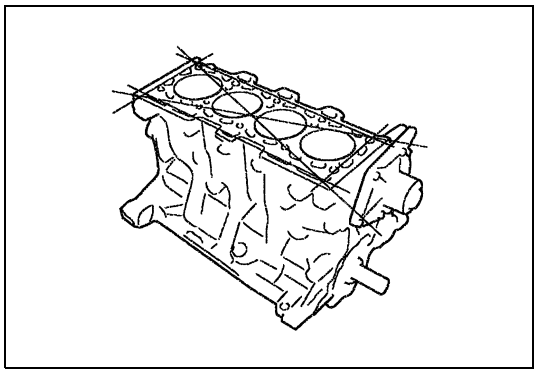

- Using straightedge and thickness gauge, check gasketed surface for distortion.
  If flatness exceeds its limit, replace cylinder block.

Cylinder block flatness
Limit: 0.03 mm (0.0012 in.)

Required Service Material

Recommended SUZUKI product or specification	Use
Loctite 518®	• To apply mating surface of cylinder head and cylinder head cover.
RHODORSEAL 5661®	• To apply mating surfaces of cylinder block, gasket holder plate and upper oil pan. • To apply mating surface of cylinder block and main bearing cap. • To apply mating surfaces of TDC pin and pin hole.
Loctite 5181®	• To apply mating surfaces of cylinder head and camshaft housing.

Tightening Torque Specifications

Fastening part	Tightening torque		
	N•m	kg-m	lb-ft
Oil pressure switch	25	2.5	18.0
Air cleaner outlet hose clamp	2.0	0.2	1.5
Cylinder head cover bolt	Tighten 12 N·m (1.2 kg-m, 9.0 lb-ft) by the specified procedure		
Generator upper bracket bolt	40	4.0	29.0
Oil pressure switch	25	2.5	18.0
Heat exchanger bolt	45	4.5	32.5
Oil filter unit bracket bolt	45	4.5	32.5
EGR valve body bolt	21	2.1	15.5
EGR valve bolt and nut	12	1.2	9.0
Intake pipe bolt	21	2.1	15.5
Turbocharger nut	26	2.6	19.0
Lubrication pipe union bolt No.2	23	2.3	17.0
Lubrication pipe union bolt N0.1	15	1.5	11.0
Lubrication pipe stiffener bolt	12	1.2	9.0
Turbocharger oil return pipe bolt	12	1.2	9.0
Turbocharger outlet nut	26	2.6	19.0
Turbocharger bracket bolt	Tighten 21 N·m (2.1kg-m, 15.5 lb-ft) by the specified procedure		
Air cleaner outlet hose clamp	2.0	0.2	1.5
Air cleaner outlet pipe clamp	2.0	0.2	1.5
Exhaust manifold nut	Tighten 26 N·m (2.6 kg-m, 19.0 lb-ft) by the specified procedure		
Oil pan baffle plate bolt	8	0.8	6.0
Upper oil pan bolt	Tighten 6 N·m (0.6 kg-m, 4.5 lb-ft) and 16 N·m (1.6 kg-m, 12.0 lb-ft) by the specified procedure		
Oil pump strainer bolt	12	1.2	9.0
Lower oil pan bolt	Tighten12 N·m (1.2 kg-m, 9.0 lb-ft) by the specified procedure		

Fastening part	Tightening torque		
	N•m	kg-m	lb-ft
Engine mounting bracket bolt	40	4.0	29.0
Accessory bracket bolt	28	2.8	20.5
Engine mounting nut	55	5.5	40.0
Engine oil drain plug	35	3.5	25.5
Transmission to engine bolt	55	5.5	40.0
Oil level gauge nut	21	2.1	15.5
Engine mounting nut	55	5.5	40.0
Timing belt tensioner bolt	25	2.5	18.0
Crankshaft pulley bolt	Tighten 120 N·m (12.0 kg-m, 87.0 lb-ft) and 95° by the specified procedure		
Timing belt inner cover bolt	9	0.9	7.0
Timing belt tensioner bolt	27	2.7	19.5
TDC pin cap	20	2.0	14.5
Generator upper bracket support bolt	21	2.1	15.5
CMP sensor bolt	8	0.8	6.0
Generator upper bracket bolt	40	4.0	29.0
Oil pump bolt	25	2.5	18.0
Gasket holder plate bolt	Tighten 11 N·m (1.1 kg-m, 8.0 lb-ft) by the specified procedure		
Camshaft housing bolt	Tighten 10 N·m (1.0 kg-m, 7.5 lb-ft) by the specified procedure		
Camshaft cover bolt	Tighten 5 N·m (0.5 kg-m, 4.0 lb-ft) and 12 N·m (1.2 kg-m, 9.0 lb-ft)		
Vacuum pump oil hose union bolt	16	1.6	12.0
Camshaft pulley nut	Tighten 30 N·m (3.0 kg-m, 22.0 lb-ft) and 85° by the specified procedure		
Cylinder head bolt	Tighten 25 N·m (2.5 kg-m, 18.0 lb-ft) and 255° by the specified		
Connecting rod bearing cap bolt	Tighten 20 N·m (2.0 kg-m, 14.5 lb-ft) and 45° by the specified procedure		
Crankshaft main bearing cap bolt	Tighten 25 N·m (2.5 kg-m, 18.0 lb-ft) and 47° by the specified procedure		
Engine right mounting nut	55	5.5	40.0
Engine left mounting nut	40	4.0	29.0
Engine side mounting bracket bolt	40	4.0	29.0

Special Tool

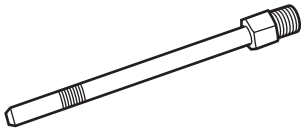 09917-78120 Dummy heater plug	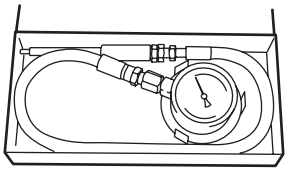 09915-77311 Oil pressure gauge	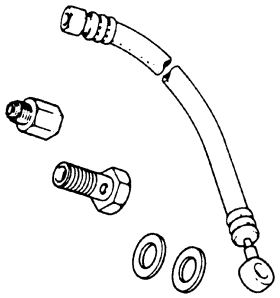 09915-77420 Oil pressure gauge hose	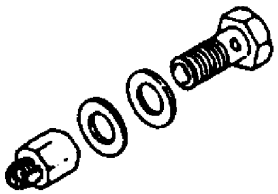 09915-77430 Oil pressure gauge attachment
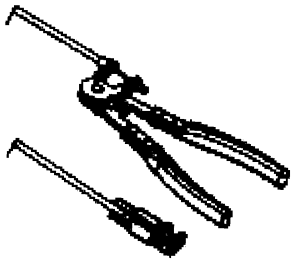 09910-68110 (Mot. 1567) EGR pipe clamp pliers	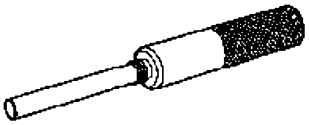 09919-58110 (Mot. 1489) TDC setting pin	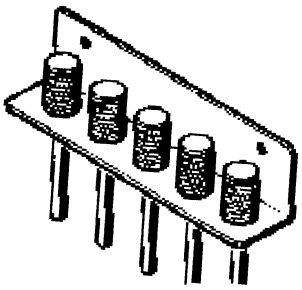 09919-58120 (Mot. 1430) Set of top dead center pins	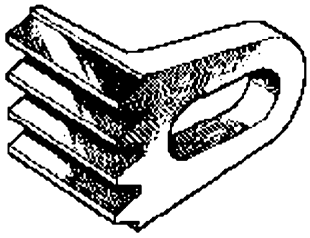 09916-98110 (Mot. 582-01) Flywheel locking tool
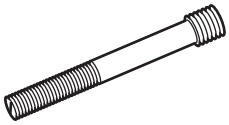 09911-98130 (Mot. 1714) Stud M14	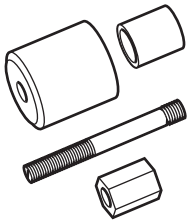 09911-98140 (Mot. 1586) Crankshaft oil seal fitting	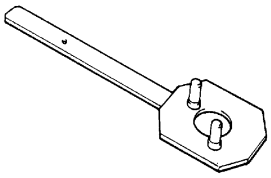 09917-68221 Camshaft lock holder	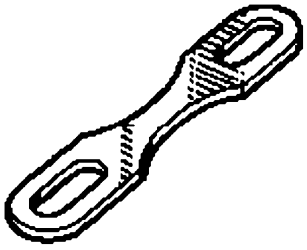 09917-68110 (Mot. 588) Cylinder liner flange
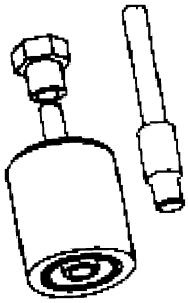 09911-98120 (Mot. 1632) Camshaft oil seal fitting	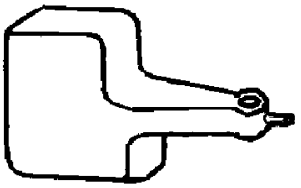 09910-26510/OUT 0000005 Dial gauge support	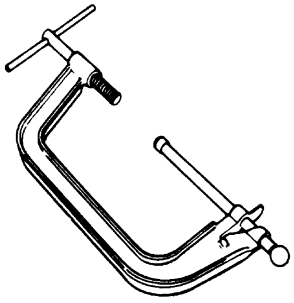 09916-14510 Valve lifter	 09916-14521 Valve lifter attachment

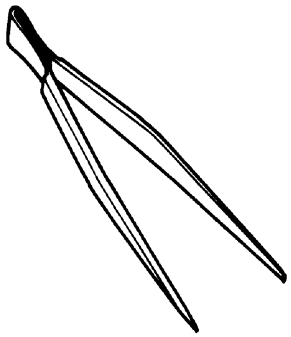 09916-84511 Forceps	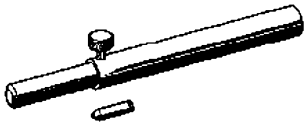 09916-58130 (Mot. 1511-01) Valve stem seal fitting	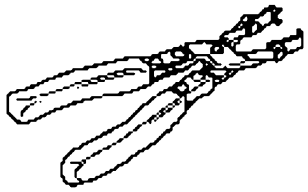 09916-48110 (Mot. 1335) Valve stem seal pliers	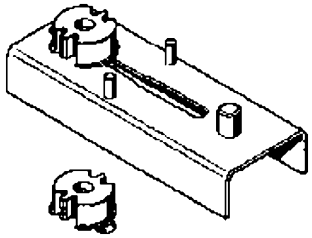 09913-98110 (Mot. 1492) Connecting rod bearing fitting
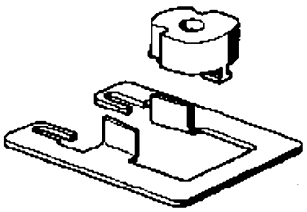 09913-88110 (Mot. 1492-3) Connecting rod bearing adapter	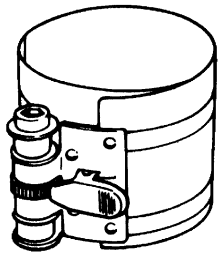 09916-77310 Piston ring compressor	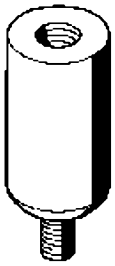 09916-48120 (Mot. 1485-01) Oil jet remover	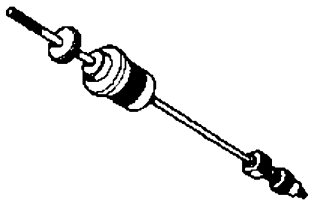 09916-58120 (Emb. 880) Inertia extractor
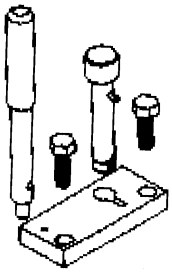 09916-58110 (Mot. 1494) Oil jet installer	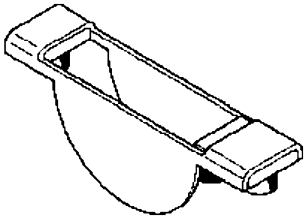 09913-78110 (Mot. 1493-01) Main bearing fitting	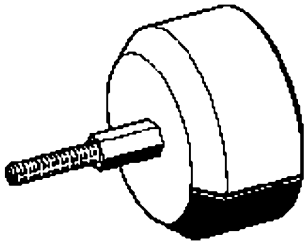 09911-98110 (Mot. 1585) Crankshaft oil seal fitting	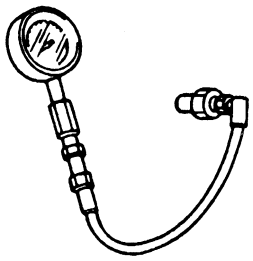 09912-57821 Compression gauge

SECTION 6B2

ENGINE COOLING (K9K ENGINE)

WARNING:

For vehicles equipped with a Supplemental Restraint (Air Bag) System:

- **Service on and around the air bag system components or wiring must be performed only by an authorized SUZUKI dealer. Refer to "Air Bag System Components and Wiring Location View" under "General Description" in air bag system section in order to confirm whether you are performing service on or near the air bag system components or wiring. Please observe all WARNINGS and "Service Precautions" under "On-Vehicle Service" in air bag system section before performing service on or around the air bag system components or wiring. Failure to follow WARNINGS could result in unintentional activation of the system or could render the system inoperative. Either of these two conditions may result in severe injury.**
- **Technical service work must be started at least 90 seconds after the ignition switch is turned to the "LOCK" position and the negative cable is disconnected from the battery. Otherwise, the system may be activated by reserve energy in the Sensing and Diagnostic Module (SDM).**

CONTENTS

General Description 6B2-2
- Cooling System Circulation 6B2-2
- Degassing Tank 6B2-2
- Water Pump 6B2-3
- Thermostat 6B2-3
- ECT sensor 6B2-3
- Radiator Cooling Fan 6B2-3

Diagnosis 6B2-4

Maintenance 6B2-5
- Coolant 6B2-5
- Coolant Level Check 6B2-6
- Engine Cooling System Inspection and Service 6B2-6
- Coolant Replacement 6B2-8

On-Vehicle Service 6B2-11
- Cooling System Component 6B2-11
- Cooling Water Pipes or Hoses Removal and Installation 6B2-12
- Thermostat Assembly Removal and Installation 6B2-12
- Engine Coolant Temperature Sensor (ECT Sensor) Removal and Installation 6B2-13
- Engine Coolant Temperature Sensor (ECT Sensor) Inspection 6B2-13
- Radiator Cooling Fan Removal and Installation 6B2-13
- Radiator Cooling Fan motor On-Vehicle Inspection 6B2-14
- Radiator Cooling Fan Disassembly and Reassembly 6B2-15
- Radiator Cooling Fan Relay Inspection 6B2-16
- Radiator Removal and Installation 6B2-16
- Radiator Inspection 6B2-17
- Water Pump Removal and Installation 6B2-17
- Water Pump Inspection 6B2-18

Required Service Material 6B2-19

Tightening Torque Specification 6B2-19

General Description

The cooling system consists of the degassing tank cap, radiator, degassing tank, hoses, water pump, radiator cooling fan and thermostat assembly. The radiator is of tube-and-fin type.

Cooling System Circulation

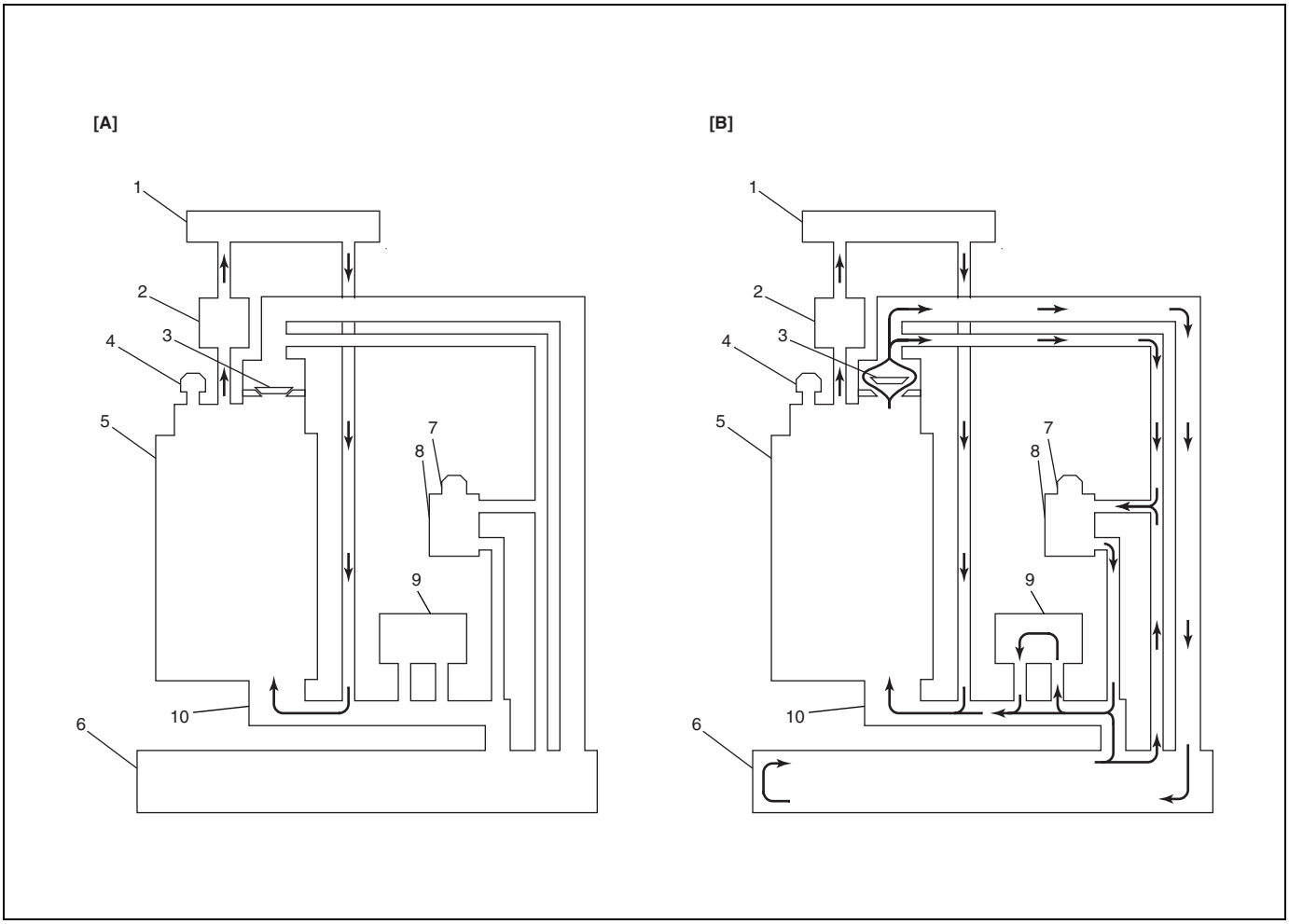

[A]: When thermostat is close	2. Thermo plunger	5. Cylinder block and cylinder head	8. Degassing tank
[B]: When thermostat is open	3. Thermostat	6. Radiator	9. Heat exchanger
1. Heater	4. Air bleed plug	7. Degassing tank cap	10. Water pump

Degassing Tank

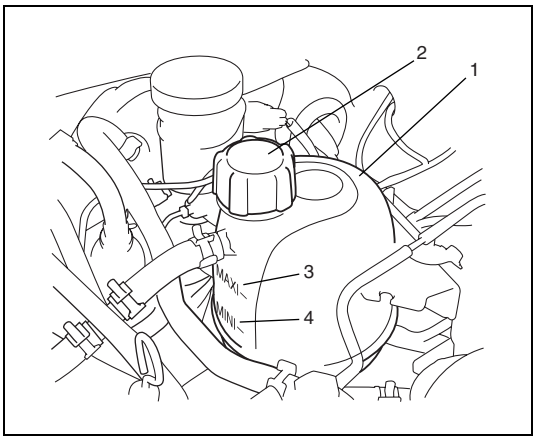

The degassing tank (1) consists of a “see-through” plastic tank, a hose and a degassing tank cap (2).

During operation, the coolant circulates inside the degassing tank constantly under pressure. As the coolant warms up and expands, the coolant level in the degassing tank rises. On the other hand, it lowers as the coolant cools down and contracts. When the pressure applied to the inside of the degassing tank constantly exceeds the specified value, the pressure is relieved through the degassing tank cap.

Therefore, cooling level should be between “MAXI” (3) and “MINI” (4) marks on the degassing tank.

Water Pump

The centrifugal type water pump is used in the cooling system.
The water pump is driven by timing belt, and it can not be disassembled.

Thermostat

The thermostat is installed to the thermostat assembly, and the thermostat assembly can not be disassembled.
A wax pellet type thermostat is used in the coolant outlet passage to control the flow of the engine coolant, to provide fast engine warm up and to regulate coolant temperatures.
A wax pellet element is hermetically contained in a metal case, and expands when heated and contracts when cooled.
When the pellet is heated and expands, the valve is opened.
As the pellet is cooled, the valve is closed by the spring.
Thus, the valve remains closed while the coolant is cold, preventing circulation of coolant through the radiator.
At this point, coolant is allowed to circulate only throughout the engine to warm it quickly and evenly.
As the engine warms, the pellet expands and the thermostat valve opens, permitting coolant to flow through the radiator.

ECT sensor

ECT sensor is installed to thermostat assembly.
For details, refer to “Engine Coolant Temperature Sensor (ECT Sensor) Removal and Installation” and “Engine Coolant Temperature Sensor (ECT Sensor) Inspection” in Section 6E2

Radiator Cooling Fan

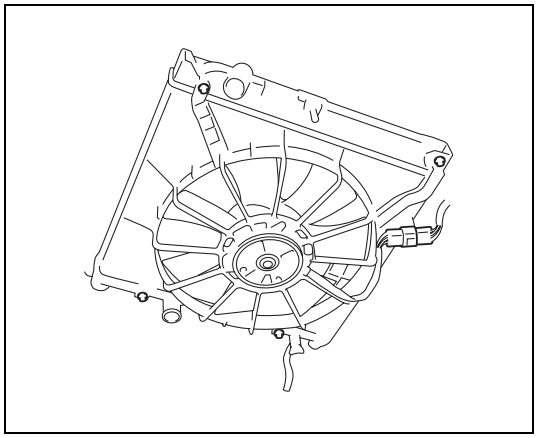

The radiator cooling fan is driven by electric motor, and the motor activates by ECM.

WARNING:

Keep hands, tools and clothing away from engine cooling fan to help prevent personal injury. This fan is electric and can come on whether or not the engine is running.
The fan can start automatically in response to the relays with the ignition switch in the “ON” position.

Diagnosis

Condition	Possible Cause	Correction
Engine overheats (It is in case that radiator cooling fan operates)	Loose or broken timing belt	Adjust or replace.
	Not enough coolant	Check coolant level and add as necessary.
	Faulty thermostat	Replace.
	Faulty water pump	Replace.
	Dirty or bent radiator fins	Clean or remedy.
	Coolant leakage on cooling system	Repair.
	Clogged radiator	Check and replace radiator as necessary.
	Faulty degassing tank cap	Replace.
	Dragging brakes	Adjust brake.
	Slipping clutch	Adjust or replace.
	Poor charge battery	Check and replace as necessary.
	Poor generation generator	Check and repair.
	ECT sensor faulty	Check and replace as necessary.
	Radiator cooling fan relay faulty	Check and replace as necessary.
	ECM faulty	Check and replace as necessary.
	Wiring or grounding faulty	Repair and necessary.
	Equipped with too much electric load part(s)	Dismount.
	Radiator cooling fan motor faulty	Check and replace as necessary.
Engine overheats (It is in case that radiator cooling fan won't operates)	Fuse blown	Check fuse of relay/fuse box and check for short circuit to ground.
	Radiator cooling fan relay	Check and replace as necessary.
	ECT sensor faulty	Check and replace as necessary.
	Radiator cooling fan motor faulty	Check and replace as necessary.
	Wiring or grounding faulty	Repair as necessary
	ECM faulty	Check and replace as necessary.

Maintenance

WARNING:

- **Keep hands, tools and clothing away from radiator cooling fan to help prevent personal injury. This fan is electric and can turn on whether engine is running or not. The fan can start automatically in response to ECM with ignition switch turned on.**
- **To help avoid danger of being burned, do nut remove degassing tank cap while engine and radiator are still hot.**
  Scalding fluid and steam can be blown out under pressure if cap is taken off too soon.

Coolant

When the system cools down, the coolant is drawn back into the radiator.
The cooling system has been filled at the factory with a quality coolant that is a 50/50 mixture of water and ethylene glycol antifreeze.
This 50/50 mixture coolant solution provides freezing protection to –36 °C (–33 °F).

- Maintain cooling system freeze protection at –36 °C (–33 °F) to ensure protection against corrosion and loss of coolant from boiling.
  This should be done even if freezing temperatures are not expected.
- Add ethylene glycol base coolant when coolant has to be added because of coolant loss or to provide added protection against freezing at temperature lower than –36 °C (–33 °F).

Anti-freeze proportioning chart

Freezing temperature	**°C**	**–36**
	°F	**–33**
Antifreeze/Anticorrosion coolant concentration	**%**	**50**
Ratio of compound to cooling water	**ltr.**	**3.5/3.5**
	US pt.	**6.16/6.16**
	Imp pt.	**7.40/7.40**

Coolant capacity
: 7 liters (12.32/14.79 US/Imp pt.)

NOTE:

- **Alcohol or methanol base coolant or plain water alone should not be used in cooling system at any time as damage to cooling system could occur.**
- **Coolant must be mixed with demineraled water or distilled water.**

Coolant Level Check

Coolant Level

WARNING:
To help avoid danger of being burned, do not remove degassing tank cap while engine and radiator are still hot.
Scalding fluid and steam can be blown out under pressure if cap is taken off too soon.

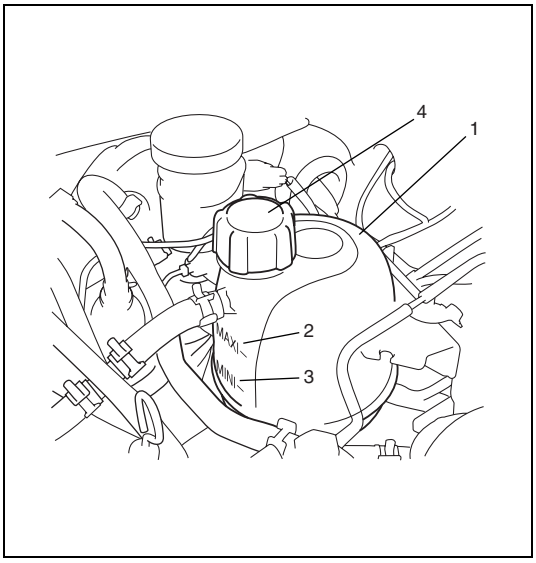

To check level, look at “see-through” degassing tank.
When engine is cool, check coolant level in degassing tank (1).
A normal coolant level should be between “MAXI” level mark (2) and “MINI” level mark (3) on degassing tank.
If coolant level is below “MINI” level mark (3), remove degassing tank cap (4) and add proper coolant to degassing tank (1) to bring coolant level up to “MAXI” level mark (2). Then, reinstall cap.

NOTE:
If proper quality antifreeze is used, there is no need to add extra inhibitors or additives that claim to improve system.
They may be harmful to proper operation of system, and are unnecessary expense.

Engine Cooling System Inspection and Service

WARNING:
To help avoid danger of being burned, do not remove degassing tank cap while engine and radiator are still hot.
Scalding fluid and steam can be blown out under pressure if cap is taken off too soon.

Cooling system should be serviced as follows.
1) Check cooling system for leakage or damage.
2) Wash degassing tank cap with clean water by removing degassing tank cap when engine is cold.
3) Check coolant for proper level and freeze protection.

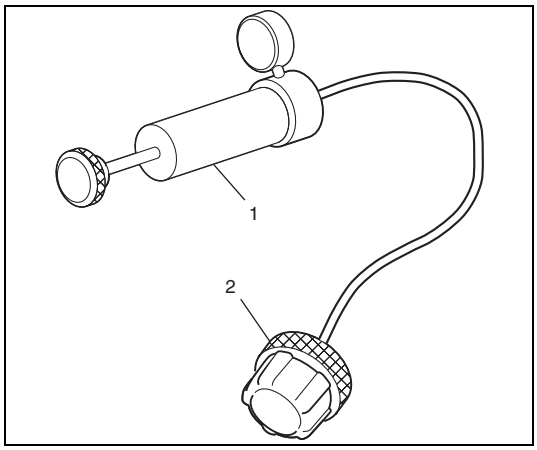

4) Using pressure tester (1), check system and degassing tank cap (2) for proper pressure holding capacity.
   If replacement of cap is required, use proper cap for this vehicle.

Cooling system and degassing tank cap holding pressure for inspection

: 120 kPa (1.1 kg/cm^2, 17.0 psi)

5) Inspect all hoses.
   Replace hoses whenever cracked, swollen or otherwise deteriorated.
6) Clean frontal area of radiator core.

Coolant Replacement

WARNING:

To help avoid danger of being burned, do not remove degassing tank cap while engine and radiator are still hot. Scalding fluid and steam can be blown out under pressure if cap is taken off too soon.

NOTE:

For detail of coolant specification, refer to "Coolant" in this section.

Coolant Draining

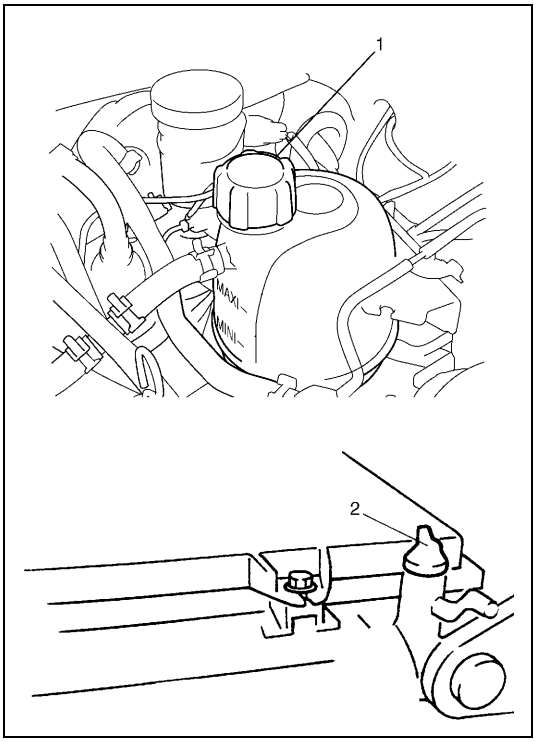

1) Remove degassing tank cap (1) by turning it counterclockwise slowly in order to release any pressure.
2) Drain coolant from radiator drain plug (2).
3) Check drained coolant for contaminants such as rust, corrosion or discoloration.
   If coolant is contaminated any one or coolant replacement is necessary, flush cooling system referring to "Cooling System Flushing" under "Coolant Replacement" in this section.

Coolant Refilling

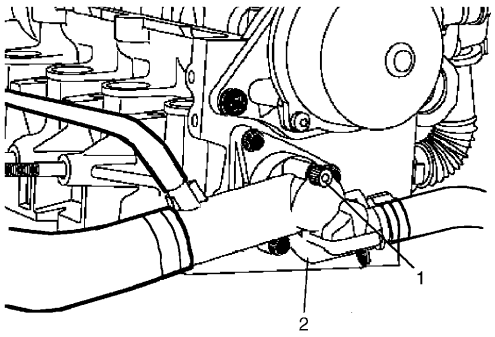

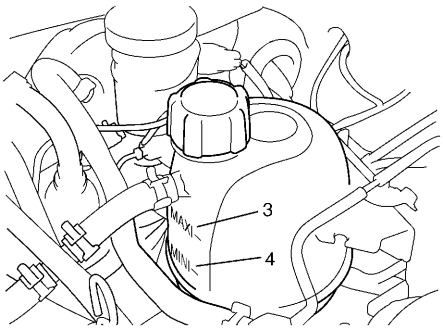

1) Close radiator drain plug.
2) Loosen air ventilation bolt (1) on thermostat assembly (2) without removing.
3) Fill degassing tank with coolant until coolant flow out from air ventilation bolt, and then tighten air ventilation bolt.
4) Fill degassing tank with coolant up to “MAXI” level mark (3).
5) Install degassing tank cap.
6) Run engine as follows in order to bleed air remained in engine and radiator.
   a) Run engine at 1500 rpm until upper radiator hose is hot.
   b) Depress accelerator pedal up to engine at 3500 rpm 4 times.
   c) Run engine at 2000 rpm for 20 minutes.
   d) Depress accelerator pedal up to engine at 3500 rpm 4 times.

NOTE:

If coolant level comes lower than “MINI” level mark (4) during this step, perform the following procedures.

a) Stop engine and wait until engine is cooled.
b) Fill degassing tank with coolant up to “MAXI” level mark.
c) Repeat step 6) again.

7) Stop engine and wait until engine is cooled.
8) Fill degassing tank with coolant up to “MAXI” level mark (3).

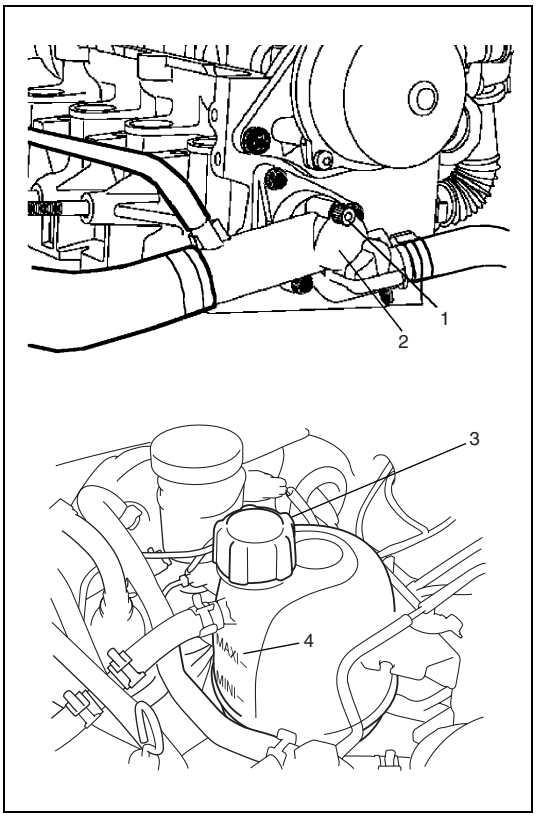

Cooling System Flushing

1) Drain coolant from cooling system referring to “Coolant draining” under “Coolant Replacement” in this section.
2) Close radiator drain plug.
3) Loosen air ventilation bolt (1) on thermostat assembly (2) without removing.
4) Fill degassing tank with water until water flow out from air ventilation bolt, and then tighten air ventilation bolt.
5) Fill degassing tank with water up to “MAXI” level mark (4).
6) Install degassing tank cap (3).
7) Run engine until upper radiator hose is hot (this shows that thermostat is open and coolant is flowing through system).
8) Wait until engine is cooled, and drain water from cooling system.
9) Repeat Steps 2) to 8) several times until drained liquid is nearly colorless.
10) Refill cooling system with coolant referring to “Coolant Refilling” under “Coolant Replacement” in this section.

On-Vehicle Service

CAUTION:

- **Check to make sure that engine coolant temperature is cold before removing any part of cooling system.**
- **Also be sure to disconnect negative (–) cable from battery terminal before removing any part.**

Cooling System Component

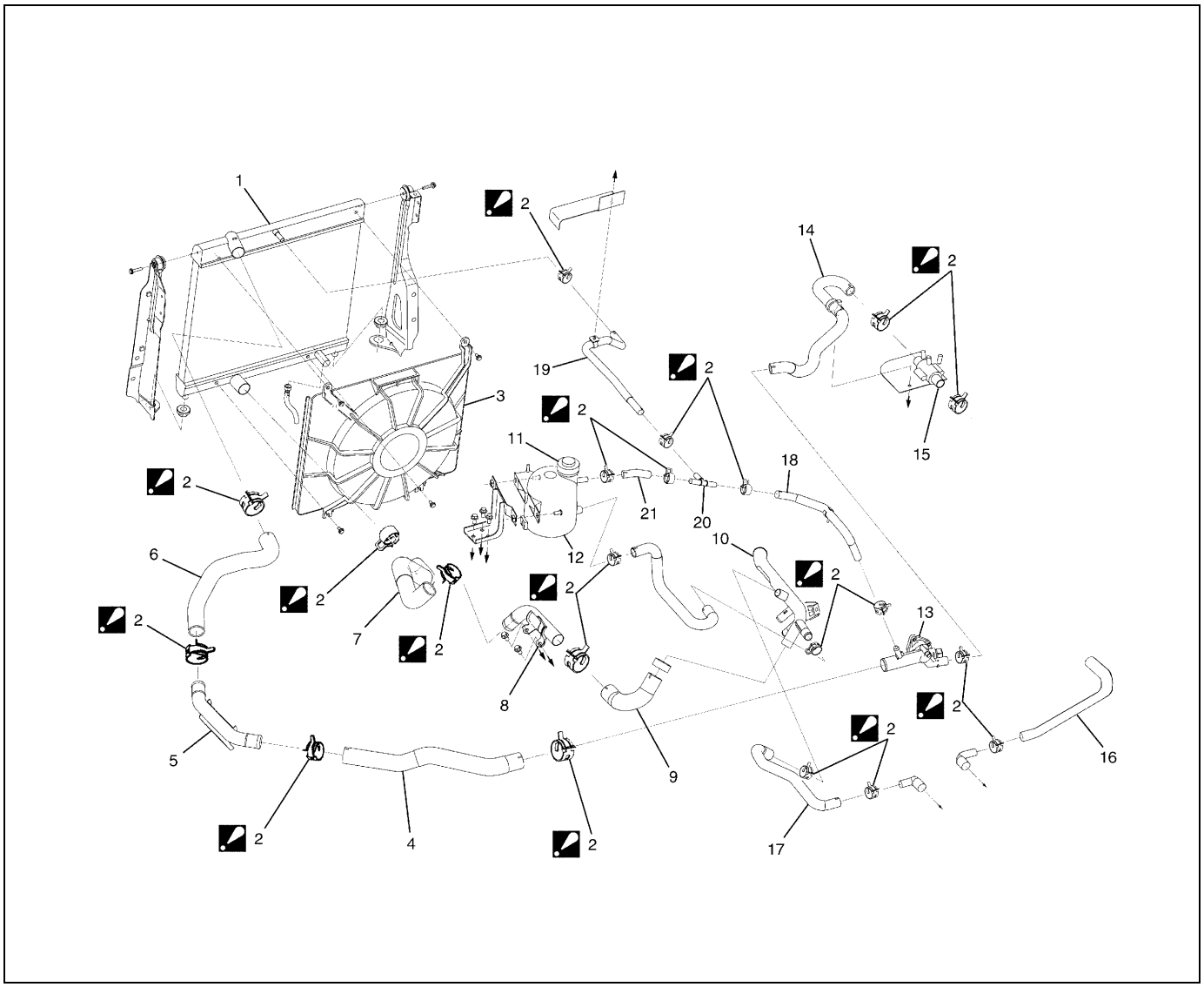

	1. Radiator	9. Radiator outlet hose No.2	17. Heater outlet hose
◢	2. Hose clip : Be sure to position clip in specified direction as shown in figure.	10. Radiator outlet pipe No.2	18. Ventilation hose (engine to 3-way joint)
	3. Radiator cooling fan assembly	11. Degassing tank cap	19. Ventilation hose (radiator to 3-way joint)
	4. Radiator inlet hose No.1	12. Degassing tank	20. 3-way joint
	5. Radiator inlet pipe	13. Thermostat assembly	21. Ventilation hose (3-way joint to degassing tank)
	6. Radiator inlet hose No.2	14. Heater inlet hose No.1	22. Degassing tank outlet hose
	7. Radiator outlet hose No.1	15. Thermo plunger	
	8. Radiator outlet pipe No.1	16. Heater inlet hose No.2	

Cooling Water Pipes or Hoses Removal and Installation

Removal

1) Drain coolant from cooling system referring to “Coolant Replacement” in this section.
2) To remove water pipes or hoses, loosen screw on each pipe or hose clip and pull hose end off.

Installation

Reverse removal order for installation noting the following.

- Connect each clip to proper direction securely referring to “Cooling System Component” in this section.
- Refill cooling system with coolant referring to “Coolant Replacement” in this section.

Thermostat Assembly Removal and Installation

CAUTION:

Do not disassemble thermostat assembly. Disassembly will spoil it original function. If any malcondition is found in thermostat assembly, replace it as assembly.

Removal

1) Drain coolant from cooling system referring to “Coolant Replacement” in this section.

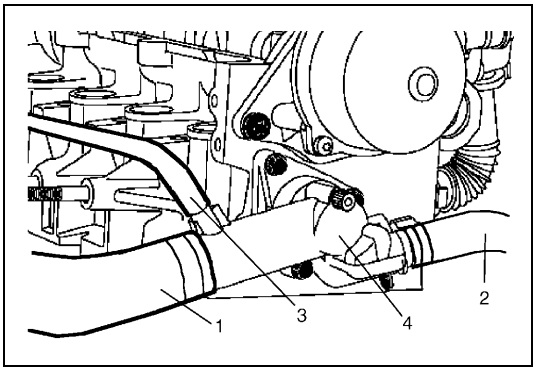

2) Disconnect radiator inlet hose No.1 (1), heater hose (2) and degassing tank hose (3).
3) Remove thermostat assembly (4) from cylinder head.

Installation

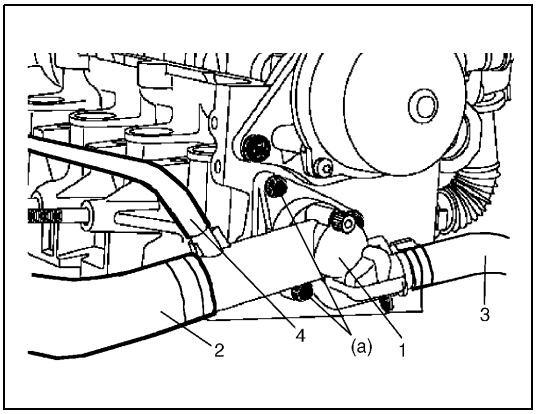

1) Install thermostat assembly (1) to cylinder head with new O-ring.
   Then, tighten thermostat assembly bolts to specified torque.

   Tightening torque
   Thermostat assembly bolt
   (a): 10 N·m (1.0 kg-m, 7.5 lb-ft)

2) Connect radiator inlet hose No.1 (2), heater hose (3) and degassing tank hose (4).
3) Refill cooling system with coolant referring to “Coolant Replacement” in this section.

Engine Coolant Temperature Sensor (ECT Sensor) Removal and Installation

Refer to “Engine Coolant Temperature Sensor (ECT Sensor) Removal and Installation” in Section 6E2.

Engine Coolant Temperature Sensor (ECT Sensor) Inspection

Refer to “Engine Coolant Temperature Sensor (ECT Sensor)” in Section 6E2.

Radiator Cooling Fan Removal and Installation

NOTE:

Do not disassemble radiator cooling fan.
If any repair is required on fan, replace it as assembly.

Removal

1) Disconnect negative (–) cable at battery.

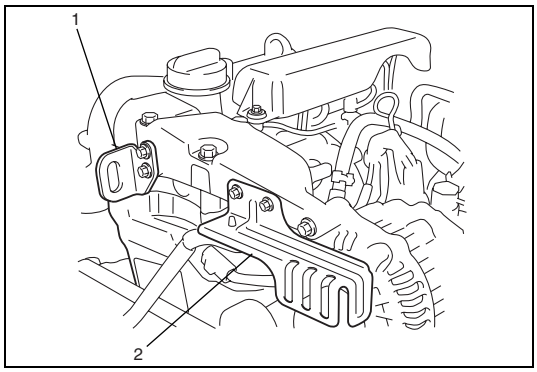

2) Remove engine hanger (1) and accessory belt cover (2).
3) Recovery refrigerant from A/C system referring to “Recovery” in Section 1B.
4) Remove A/C suction pipe and condenser outlet pipe referring to “Major Components and Location” in Section 1B.
5) Detach P/S reservoir from its bracket.
6) Drain coolant from cooling system referring to “Coolant Replacement” in this section.
7) Disconnect radiator upper hose No.2 and degassing hose from radiator.

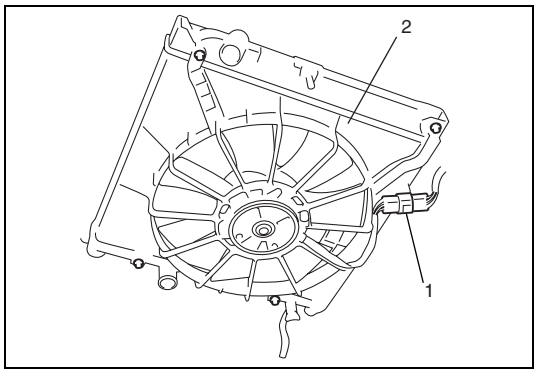

8) Disconnect cooling fan motor connector (1).
9) Remove radiator cooling fan (2).

Installation

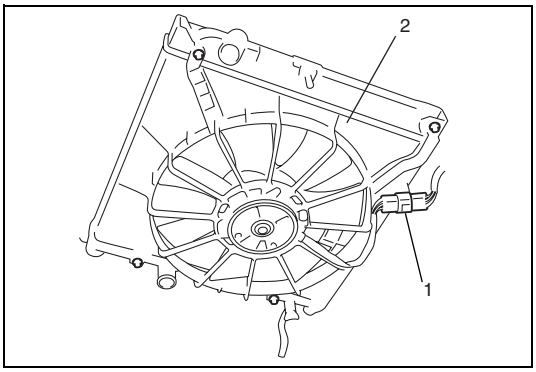

1) Install radiator cooling fan(2).
2) Connect cooling fan motor connector (1).
3) Connect radiator upper hose No.2 and degassing hose to radiator.
4) Install P/S tank to its bracket.
5) Install A/C suction pipe and condenser outlet pipe referring to “Major Components and Location” in Section 1B.

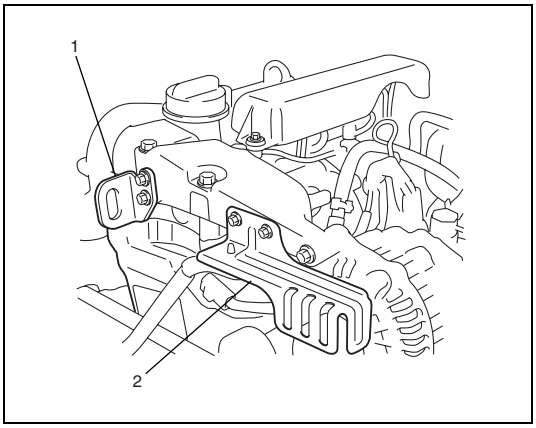

6) Install engine hanger (1) and accessory belt cover (2).

Tightening torque
Engine hanger bolt (a): 23 N·m (2.3 kg-m, 17.0 lb-ft)

7) Connect negative (–) cable at battery.
8) Refill cooling system with coolant referring to “Coolant Replacement” in this section.
9) Recharge A/C system with refrigerant referring to “Operation Procedure for Refrigerant Charging” in Section 1B.
10) Check to make sure that there is no coolant leakage and A/C refrigerant leakage at each connection.

Radiator Cooling Fan motor On-Vehicle Inspection

Inspection

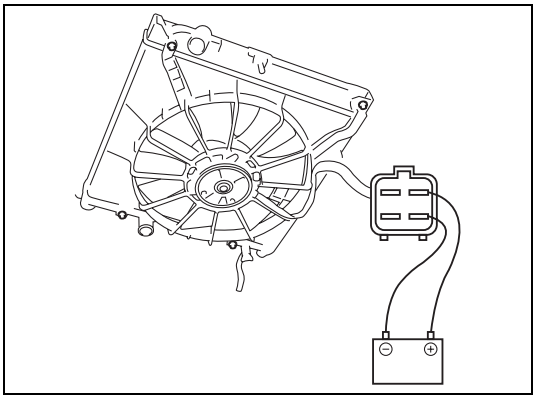

1) Check low speed operation of radiator cooling fan as follows.
   a) Connect battery to fan motor coupler as shown in figure.
   b) Check that radiator cooling fan rotates smoothly and ammeter indicates specified current.
      If any abnormality is found, replace radiator cooling fan motor.

Radiator cooling fan motor specified current at 12 V
: 15.0 A maximum

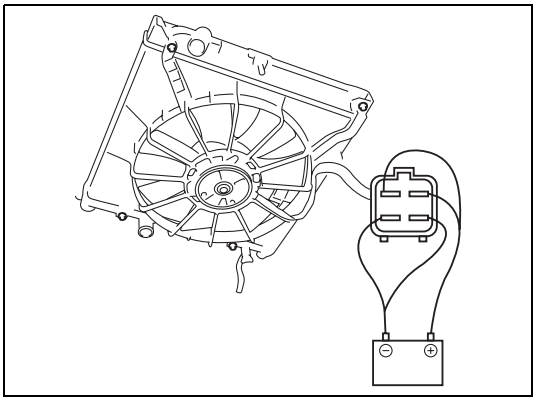

2) Check high speed operation of radiator cooling fan as follows.
   a) Connect battery to fan motor coupler as shown in figure.
   b) Check that radiator cooling fan rotates smoothly and ammeter indicates specified current.
      If any abnormality is found, replace radiator cooling fan motor.

Radiator cooling fan motor specified current at 12 V
: 20.0 A maximum

Radiator Cooling Fan Disassembly and Reassembly

Disassembly

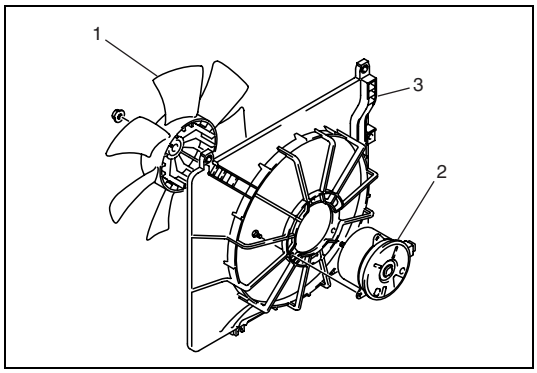

1) Remove fan (1) from cooling fan motor (2).
2) Remove fan motor (2) from cooling fan guide (3).

Reassembly

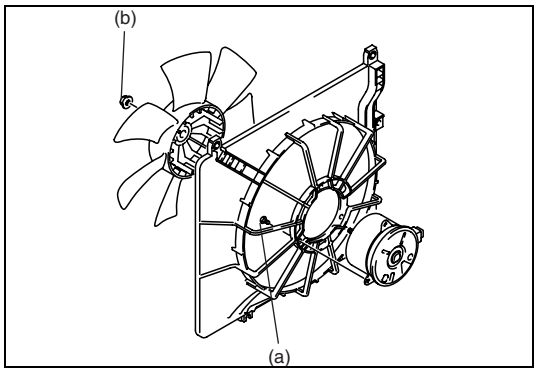

Reverse disassembly procedures for reassembly noting following.

Tightening torque
Cooling fan motor bolt (a): 4 N·m (0.4 kg-m, 3.0 lb-ft)
Tightening torque
Fan nut (b): 6 N·m (0.6 kg-m, 4.5 lb-ft)

Radiator Cooling Fan Relay Inspection

Inspection

1) Disconnect negative (–) cable at battery.
2) Remove radiator cooling fan relay No.1 (1), No.2 (2) and/or No.3 (3) from relay box.

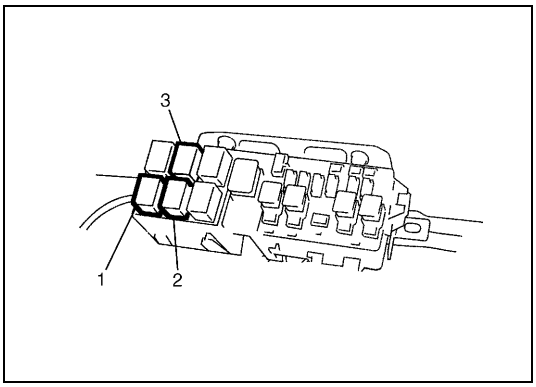

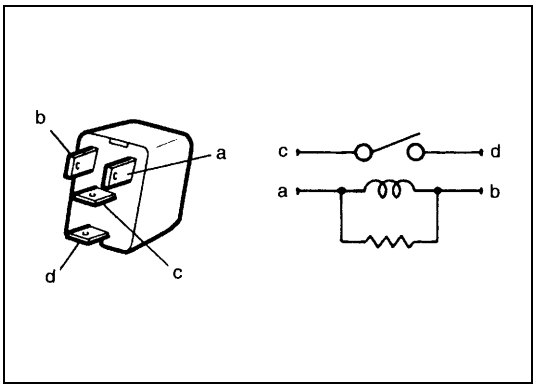

3) Check radiator cooling fan relay as follow.
   a) Check that there is no continuity between terminal “c” and “d”.
      If there is continuity, replace relay.
   b) Connect battery positive (+) terminal to terminal “b” of relay.
      Connect battery negative (–) terminal “a” of relay.
      Check continuity between terminal “c” and “d”.
      If there is no continuity when relay is connected to the battery, replace relay.

Radiator Removal and Installation

Removal

1) Remove radiator cooling fan assembly referring to “Radiator Cooling Fan Removal and Installation” in this section.
2) Disconnect radiator inlet hose No.1 from radiator.
3) Remove radiator after removing two mounting bolts (1).

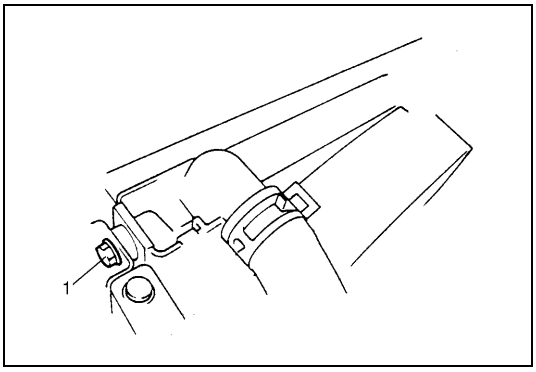

Installation

Reverse removal procedure for installation noting the following.

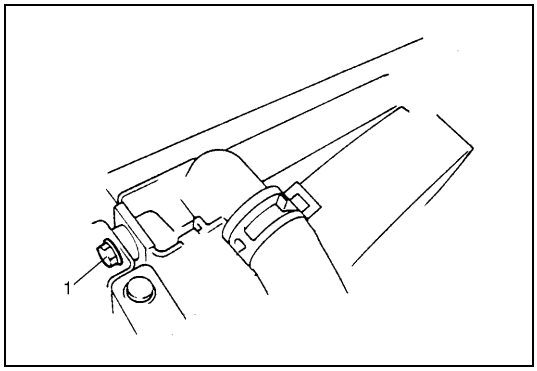

- Tighten radiator mounting bolts (1) by the specified torque

Tightening torque
Radiator mounting bolt (a): 11 N·m (1.1 kg-m, 8.0 lb-ft)

- Refill cooling system with coolant referring to “Coolant Replacement” in this section.
- Recharge A/C system with refrigerant referring to “Operation Procedure for Refrigerant Charging” in Section 1B.
- Check to make sure that there is no coolant leakage and A/C refrigerant leakage at each connection.

Radiator Inspection

Inspection

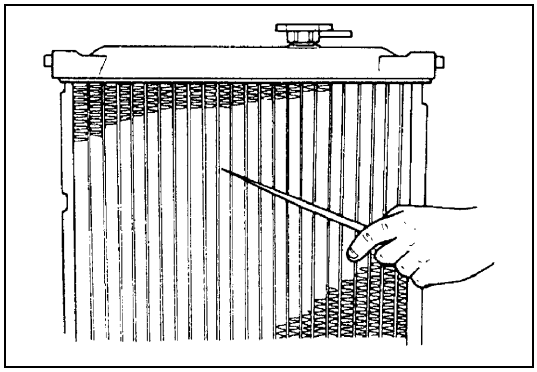

If the water side of the radiator is found excessively rusted or covered with scales, clean it by flushing with the radiator cleaner compound.
This flushing should be carried out at regular intervals for scale or rust formation advances with time even where a recommended type of coolant is used. Periodical flushing will prove more economical.
Inspect the radiator cores and straighten the flattened or bent fins, if any. Clean the cores, removing road grimes and trashes.
Excessive rust or scale formation on the wet side of the radiator lowers the cooling efficiency.
Flattened or bent fins obstruct the flow of air through the core to impede heat dissipation.

Water Pump Removal and Installation

NOTE:

Do not disassemble water pump.
If any repair is required on pump, replace it as assembly.

Removal

1) Remove engine assembly referring to “Engine Assembly Removal and Installation” in Section 6A2.
2) Remove timing belt referring to “Timing Belt and Belt Tensioner Removal and Installation” in Section 6A2.

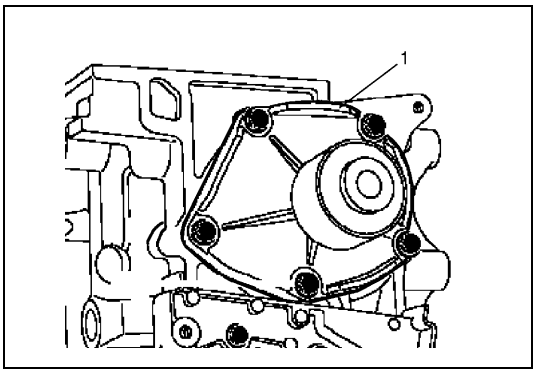

3) Remove water pump (1) from cylinder block.

Installation

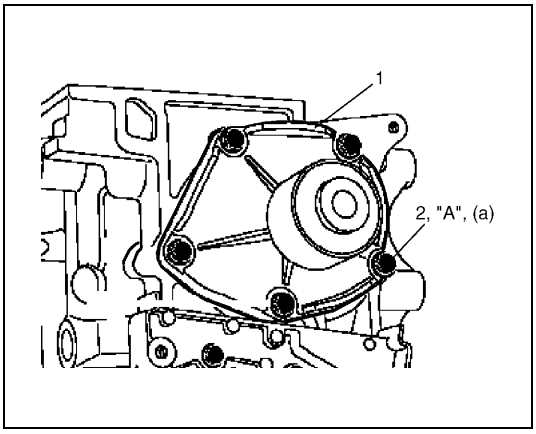

1) Install water pump (1) to cylinder block with new gasket, and tighten water pump bolts (2) specified torque after applying specified sealant.

"A": LOCTITE FRENETANCH

Tightening torque
Water pump bolt (a): 11 N·m (1.1 kg-m, 8.0 lb-ft)

2) Install timing belt referring to "Timing Belt and Belt Tensioner Removal and Installation" in Section 6A2.
3) Install engine assembly referring to "Engine Assembly Removal and Installation" in Section 6A2.

Water Pump Inspection

Inspection

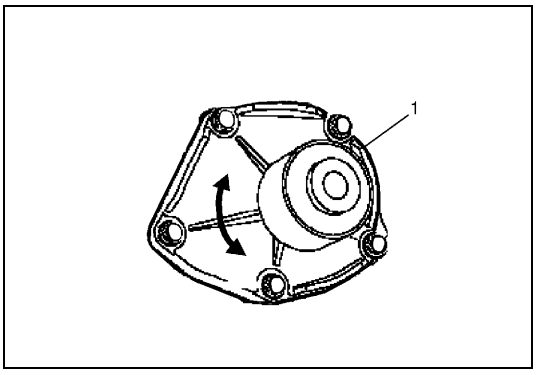

- Rotate water pump (1) by hand to check for smooth operation.
  If pump does not rotate smoothly or makes an abnormal noise, replace it.

Required Service Material

Material	Recommended SUZUKI product (Part Number)	Use
Ethylene glycol base coolant (Anti-freeze / Anti-corrosion coolant)	–	Additive to engine cooling system for improving cooling efficiency and for protection against rusting.
Sealant	LOCTITE FRENETANCH	To apply to water pump bolt.

Tightening Torque Specification

Fastening part	Tightening torque		
	N•m	kg-m	lb-ft
Thermostat assembly bolt	10	1.0	7.5
Engine hanger bolt	23	2.3	17.0
Radiator mounting bolt	11	1.1	8.0
Water pump bolt	11	1.1	8.0

SECTION 6C2

ENGINE FUEL (K9K ENGINE)

WARNING:

For vehicles equipped with a Supplemental Restraint (Air Bag) System:

- **Service on and around the air bag system components or wiring must be performed only by an authorized SUZUKI dealer. Refer to "Air Bag System Components and Wiring Location View" under "General Description" in air bag system section in order to confirm whether you are performing service on or near the air bag system components or wiring. Please observe all WARNINGS and "Service Precautions" under "On-Vehicle Service" in air bag system section before performing service on or around the air bag system components or wiring. Failure to follow WARNINGS could result in unintentional activation of the system or could render the system inoperative. Either of these two conditions may result in severe injury.**
- **Technical service work must be started at least 90 seconds after the ignition switch is turned to the "LOCK" position and the negative cable is disconnected from the battery. Otherwise, the system may be activated by reserve energy in the Sensing and Diagnostic Module (SDM).**

CONTENTS

General Description 6C2-1
On-Vehicle Service 6C2-2
Fuel System Components 6C2-2
Precautions 6C2-3
Water Draining of Fuel Filter 6C2-4
Air Bleeding of Fuel System 6C2-4
Fuel Line Inspection 6C2-4
Fuel Filler Cap Inspection 6C2-4
Fuel Tank Components 6C2-5
Fuel Tank Removal and Installation 6C2-6
Fuel Tank Inspection 6C2-8
Fuel Tank Purging Procedure 6C2-8
Fuel Level Gauge Assembly Removal and Installation 6C2-9
Fuel Pipe Removal and Installation 6C2-10
Fuel Level Gauge Inspection 6C2-12
Fuel Filter Removal and Installation 6C2-12
Special Tool 6C2-13
Tightening Torque Specification 6C2-13

General Description

The main components of the fuel system are fuel tank, fuel level gauge, priming pump, high pressure fuel pump and fuel filter and it includes fuel feed line, fuel vapor line and fuel return line.

On-Vehicle Service

CAUTION:

- **Do not expose removed fuel parts to dust. Keep them always clean.**
- **Be sure to read "Precautions in Fuel Delivery System" in Section 6E2 before disconnecting fuel line or removing fuel system part(s).**
  Failure to follow its instruction could result unneeded fuel system repairs.

Fuel System Components

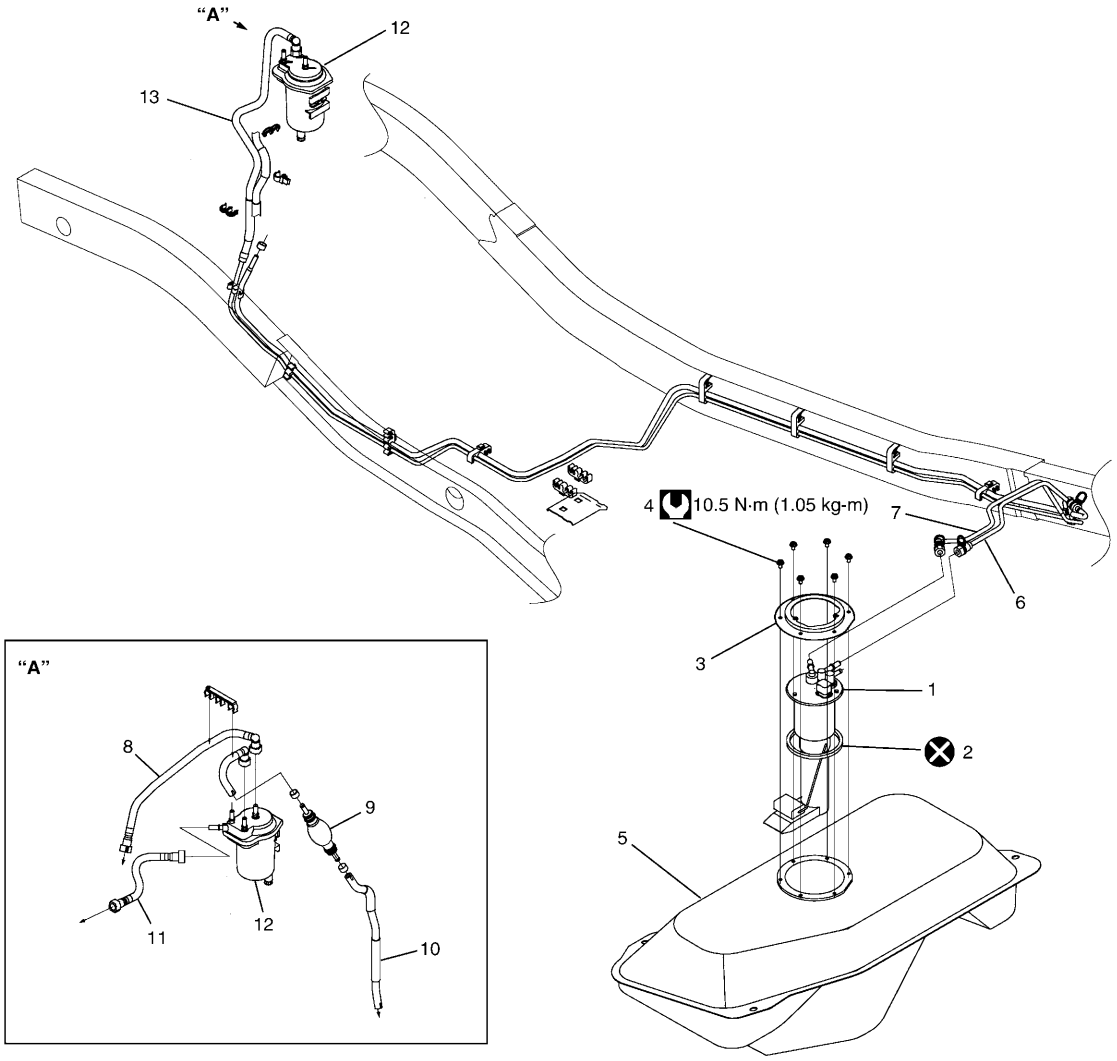

"A": View A	4. Fuel level gauge assembly bolt	8. Fuel feed hose No.2	12. Fuel filter
1. Fuel level gauge	5. Fuel tank	9. Priming pump	13. Fuel return hose No.2
2. Fuel level gauge plate gasket	6. Fuel feed line	10. Fuel feed hose No.1	Tightening torque
3. Fuel level gauge plate	7. Fuel return line	11. Fuel return hose No.1	Do not reuse.

Precautions

CAUTION:

- **Do not expose removed fuel parts to dust. Keep them always clean.**
- **Be sure to read "Precautions in Fuel Delivery System" in Section 6E2 before disconnecting fuel line or removing fuel system part(s).**
  Failure to follow its instruction could result unneeded fuel system repairs.

WARNING:

Before attempting service of any type on fuel system, the following should be always observed in order to reduce the risk or fire and personal injury.

- **Disconnect negative (–) cable at battery.**
- **Do not smoke, and place no smoking signs near work area.**
- **Be sure to have CO_2 fire extinguisher handy.**
- **Be sure to perform work in a well-ventilated area and away from any open flames (such as gas hot heater).**
- **Wear safety glasses.**
- **To relieve fuel vapor pressure in fuel tank, remove fuel filler cap from fuel filler neck and then reinstall it.**
- **A small amount of fuel may be released after the fuel line is disconnected. In order to reduce the chance of personal injury, cover the fitting to be disconnected with a shop cloth. Be sure to put that cloth in an approved container when disconnection is completed.**
- **Note that fuel hose connection varies with each type of pipe. Be sure to connect and clamp each hose correctly referring to the figure.**

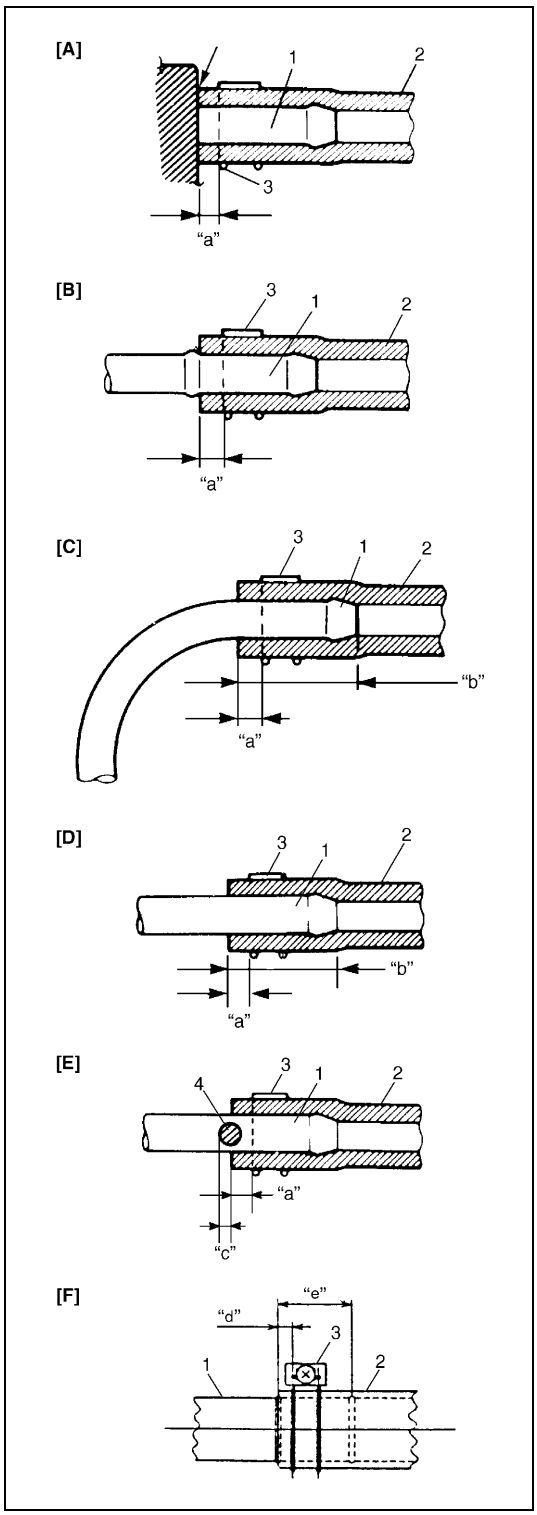

[A]:	With short pipe, fit hose as far as it reaches pipe joint as shown.
[B]:	With the following type pipe, fit hose as far as its peripheral projection as shown.
[C]:	With bent pipe, fit hose as far as its bent part as shown or till depth "b".
[D]:	With straight pipe, fit hose till depth "b".
[E]:	With red marked pipe, fit hose end reaches red mark on pipe.
[F]:	For fuel tank filler hose, insert it to spool or welding-bead.
1.	Pipe
2.	Hose
3.	Clamp
4.	Red mark
"a":	Clamp securely at a position 3 – 7 mm (0.12 – 0.27 in.) from hose end.
"b":	25 – 30 mm (0.79 – 1.18 in.)
"c":	0 – 5 mm (0 – 0.19 in.)
"d":	5 – 12 mm (0.2 – 0.47 in)
"e":	40 mm (1.57 in)

Water Draining of Fuel Filter

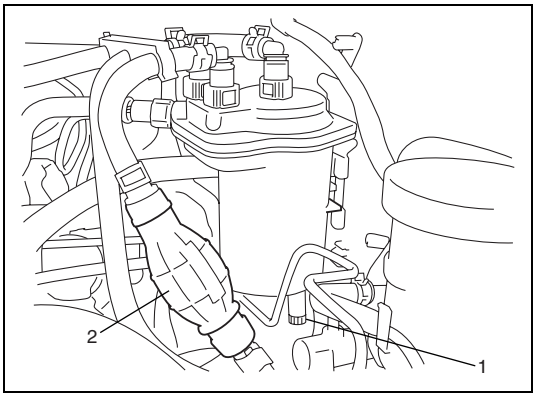

1) Disconnect negative (–) cable at battery.
2) Place container under bleed screw (1).
3) Pump priming pump (2) several times until fuel flow out from bleed screw in order to drain water from fuel filter.
4) Tighten bleed screw.
5) Connect negative (–) cable at battery.

Air Bleeding of Fuel System

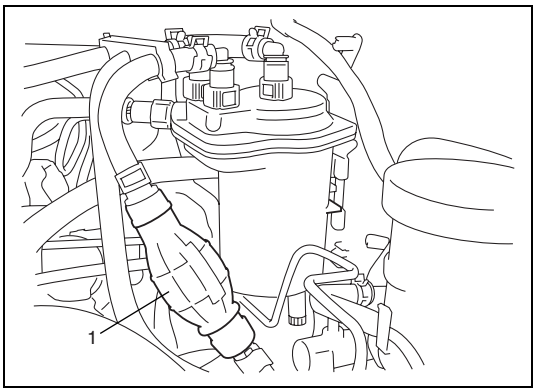

Air bleeding must be carried out when fuel system has been disassembled or when vehicle ran out of fuel.
Pump priming pump (1) 20 times or more, and then check engine starts.

Fuel Line Inspection

Visually inspect fuel lines for evidence of fuel leakage, hose crack and deterioration, or damage.
Make sure all clamps are secure.
Replace parts as needed.

Fuel Filler Cap Inspection

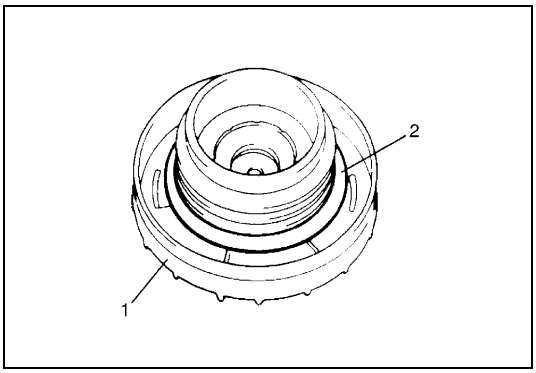

Remove cap (1), and check gasket for even filler neck imprint, and deterioration or any damage. If gasket (2) is in malcondition, replace cap.

CAUTION:

If cap requires replacement, only a cap with the same features should be used. Failure to use correct cap can result in critical malfunction of system.

Fuel Tank Components

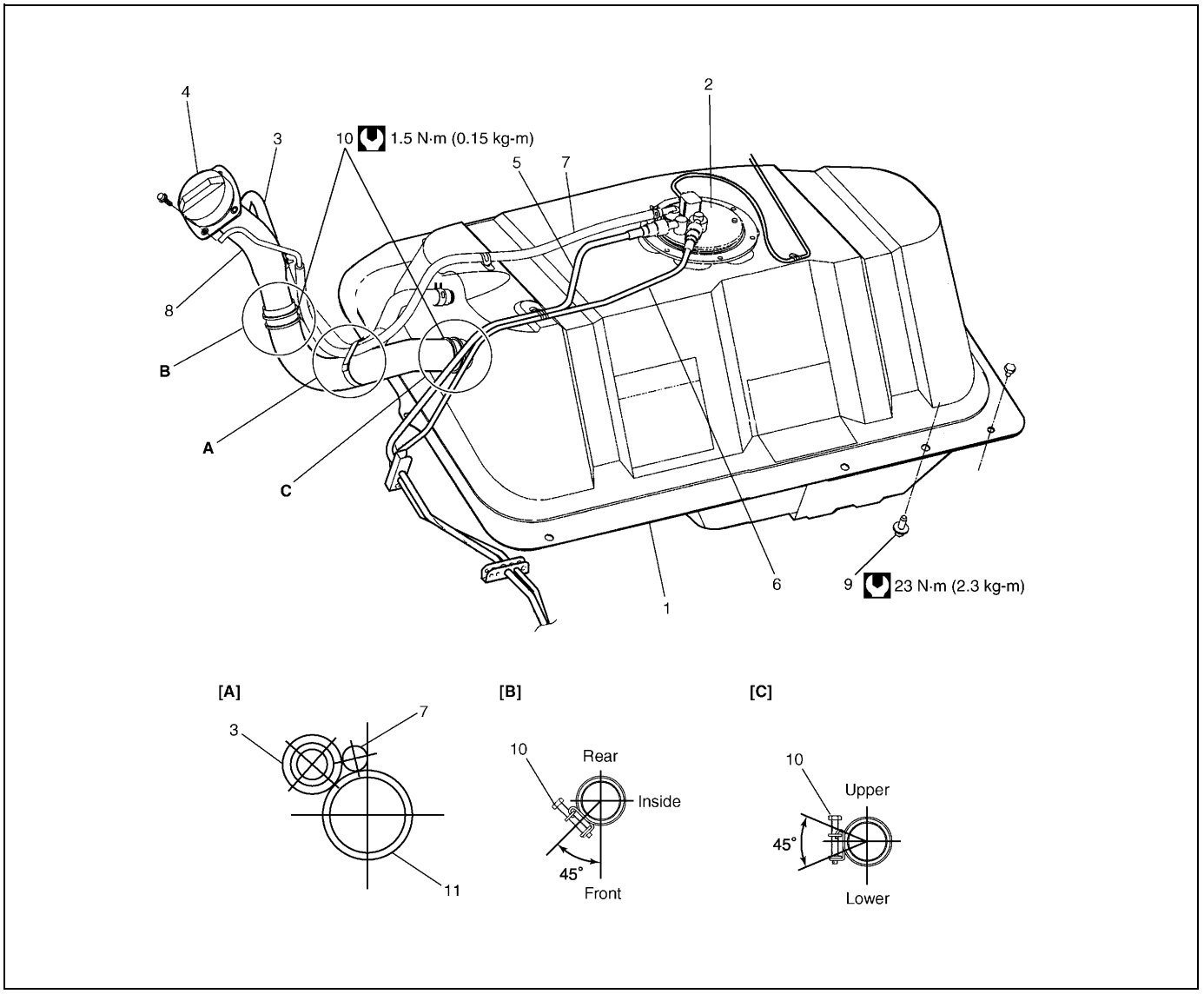

[A]: Detail: A	2. Fuel level gauge	6. Fuel return line	10. Fuel hose clamp
[B]: Detail: B	3. Breather hose	7. Fuel vapor line	11. Fuel filler hose
[C]: Detail: C	4. Fuel filler cap	8. Fuel filler neck	Tightening torque
1. Fuel tank	5. Fuel feed line	9. Fuel tank mounting bolt	

Fuel Tank Removal and Installation

Removal

WARNING:

- **Before starting the following procedure, be sure to observe "Precautions in Fuel Delivery System" in Section 6E2.**
- **Keep fuel tank horizontally and stably when removing it. Fuel may come out if tank is tilted. Also, fuel tank may drop and cause personal injury.**

1) Disconnect negative (–) cable at battery.
2) Remove fuel filler cap.
3) Insert hose of a hand operated pump into fuel filler hose (1) and drain fuel in space "a" in the figure (drain fuel through it till fuel stops).

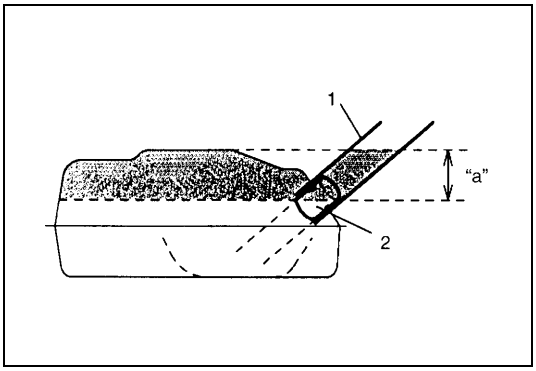

CAUTION:

Do not force hose of a hand operated pump into fuel tank. Doing so can damage inlet valve (2).

4) Hoist vehicle.
5) Remove exhaust center pipe referring to "Components" in Section 6K2 and rear propeller shaft referring to "Propeller Shafts" in Section 4B.
6) Remove fuel tank filler hose protector.
   Disconnect filler hose, vapor hose and breather hose from fuel filler neck.
7) With fuel tank supported on a jack, remove fuel tank bolts.
8) Lower fuel tank a little and hold it. Unclamp fuel hoses and disconnect them from fuel level gauge (1).
   When disconnecting joints of fuel feed line and return line from pipe, unlock joint by inserting special tool between pipe (3) and joint lock first.

   Special tool
   (A): 09919-47020

9) Disconnect fuel level gauge connector (6) from fuel level gauge.

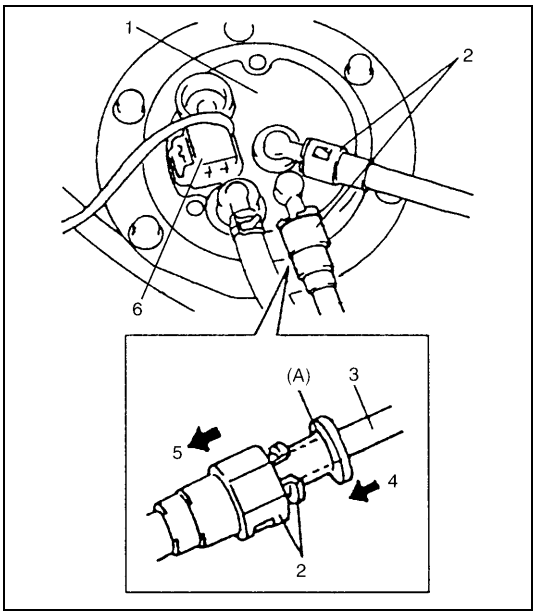

2.	Quick joint
4.	Insert special tool
5.	Disconnect joint

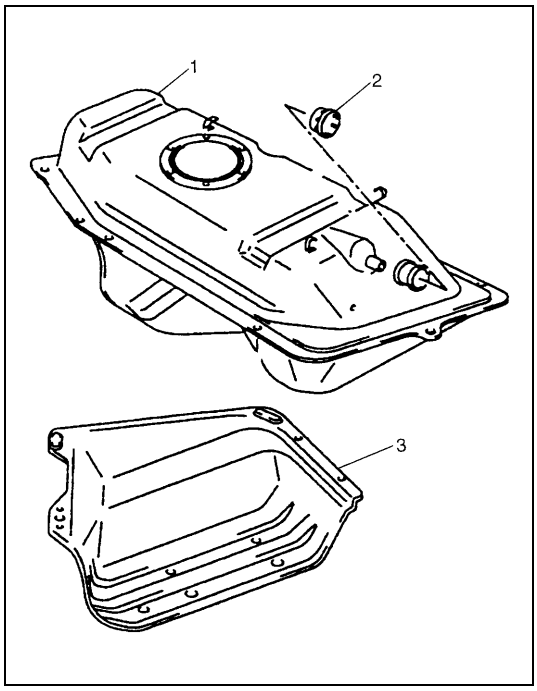

10) Remove fuel tank (1) from vehicle. Remove fuel tank protector (3) and inlet valve (2) as necessary.

Installation

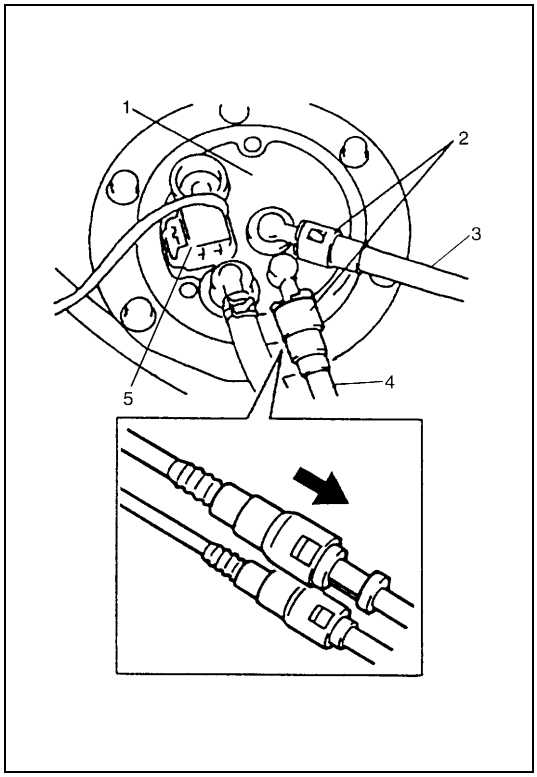

1) Install fuel level gauge (1) to fuel tank referring to “Fuel Level Gauge Assembly Removal and Installation” in Section. Install protector to fuel tank.
2) Install inlet valve to fuel tank.
   If deformed or damaged in any other way, replace with a new one.
3) Connect fuel filler and breather hoses to fuel tank and vapor hose to fuel level gauge. Clamp them securely.
4) Lift up fuel tank on jack.
   Connect fuel feed hose (4) and return hose (3) to pipes as shown in figure and clamp them securely.

CAUTION:

When connecting joint, clean outside surfaces of pipe where joint is to be inserted, push joint into pipe till joint lock clicks and check to ensure that pipes are connected securely, or fuel leak may occur.

5) Connect fuel level gauge connector (5).

2. Quick joint

6) Install fuel tank to vehicle.

Tightening torque
Fuel tank mounting bolt: 23 N·m (2.3kg-m, 17.0 lb-ft)

7) Connect fuel filler hose and breather hose to fuel filler neck. Connect fuel vapor hose to pipe. Clamp them securely.
8) Install fuel filler hose protector.

Fuel Tank Inspection

After removing fuel tank, check hoses and pipes connected to fuel tank for leaks, loose connections, deterioration or damage. Also check fuel level gauge gaskets for leaks, visually inspect fuel tank for leaks and damage.
Replace any damaged or malconditioned parts.

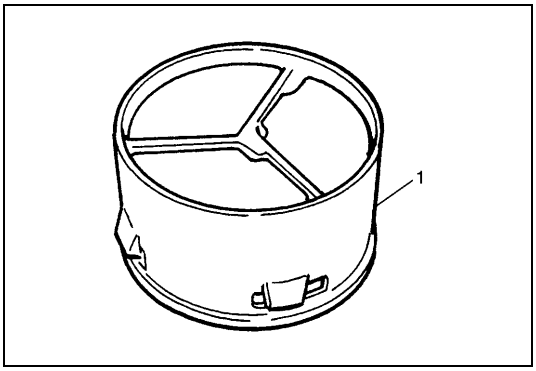

Check fuel tank inlet valve (1) for the following.

- Damage
- Smooth opening and closing

If any damage or malfunction is found, replace.

Fuel Tank Purging Procedure

WARNING:

This purging procedure will not remove all fuel vapor. Do not attempt any repair on tank using heat of flame as an explosion resulting in personal injury could occur.

CAUTION:

Never remain water in fuel tank after washing, or fuel tank inside will get corrosion.

1) After removing fuel tank, remove all hoses, pipes and fuel pump assembly from fuel tank.
2) Drain all remaining fuel from tank.
3) Place fuel tank to flushing area.
4) Fill tank with warm water or tap water, and agitate vigorously and drain. Repeat this washing until inside of tank is clean. Replace tank if its inside is rusty.
5) Completely flush out remaining water after washing.

Fuel Level Gauge Assembly Removal and Installation

WARNING:

Before starting the following procedure, be sure to observe "Precautions" in this section.

CAUTION:

Do not disassemble fuel level gauge assembly. Disassembly will spoil its original performance.

Removal

1) Remove fuel tank from vehicle referring to "Fuel Tank Removal and Installation" in this section.

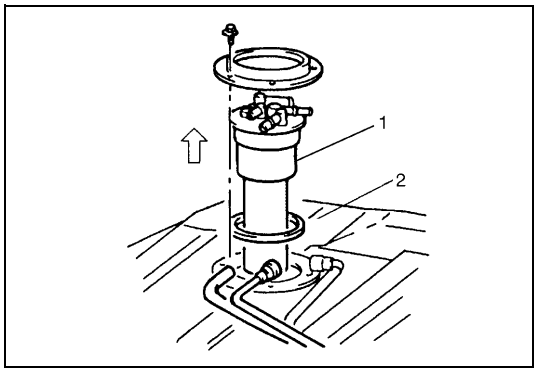

2) Remove fuel level gauge (1) from fuel tank (2).

Installation

CAUTION:

When connecting joint, clean outside surface of pipe where joint is to be inserted, push joint into pipe till joint lock clicks and check to ensure that pipes are connected securely, or fuel leak may occur.

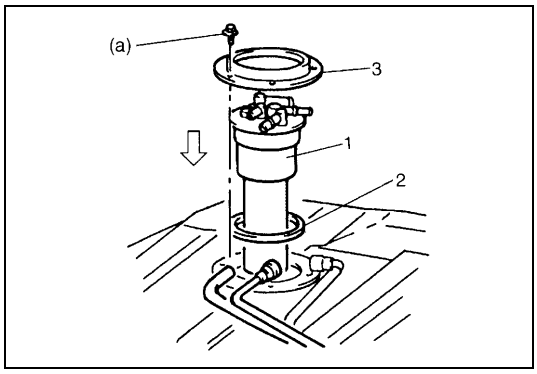

1) Clean mating surfaces of fuel level gauge (1) and fuel tank.
2) Install new gasket (2) and plate (3) to fuel level gauge (1), and then install fuel level gauge to fuel tank.

Tightening torque
Fuel level gauge bolt (a): 10.5 N·m (1.05 kg-m, 7.5 lb-ft)

3) Install fuel tank to vehicle referring to "Fuel Tank Removal and Installation" in this section.

Fuel Pipe Removal and Installation

WARNING:

- **Before starting the following procedure, be sure to observe "Precautions" in this section.**
- **A small amount of fuel may be released after the fuel hose is disconnected. In order to reduce the chance of personal injury, cover the hose and pipe to be disconnected with a shop cloth. Be sure to put that cloth in an approved container when disconnection is completed.**

Removal

1) Remove fuel tank referring to "Fuel Tank Removal and Installation" in this section.
2) Remove transfer referring to "Transfer Assembly Dismounting and Remounting" in Section 7D2.
3) Remove transmission referring to "Transmission Dismounting and Remounting" in Section 7A2.

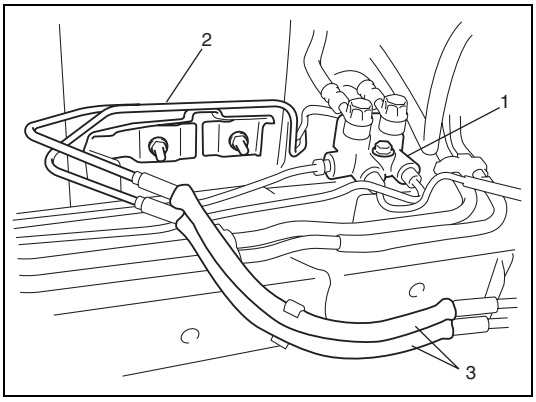

4) With pipe connected, detach brake pipe joint (1) from frame (if equipped).
5) Remove vacuum pipe (2) and hoses (3).

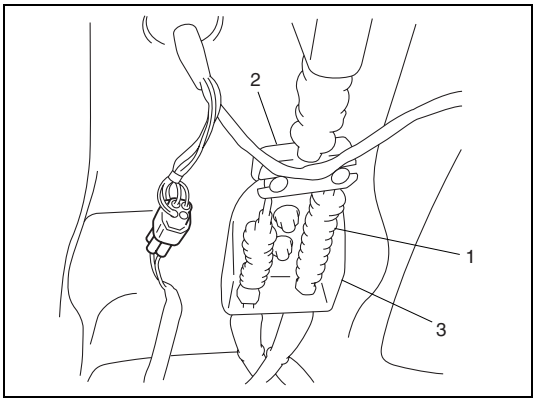

6) Disconnect right side parking brake cable (1) from equalizer (2) and bracket (3).
7) Disconnect fuel level gauge connector (1).

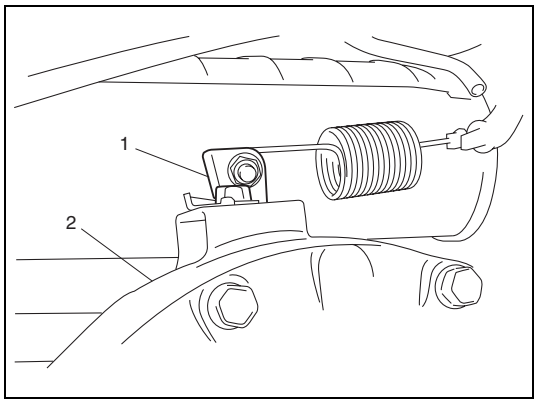

8) Remove LSPV bracket from (1) axle housing (2), if equipped.
9) Remove fuel return pipe and fuel feed pipe.

Installation

Reverse removal procedure for installation noting the following points.

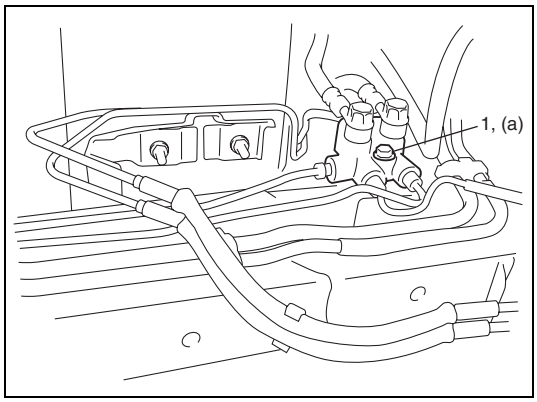

- Tighten brake pipe joint bolt (1) to specified torque.

Tightening torque
Brake pipe joint bolt (a):
11 N·m (1.1 kg-m, 8.0 lb-ft)

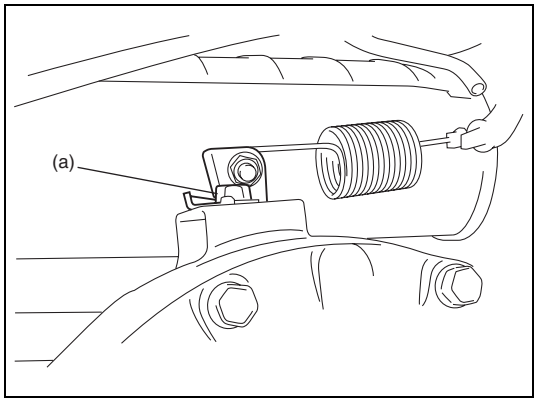

- Tighten LSPV bracket bolt to specified torque, if removed.

Tightening torque
LSPV bracket bolt (a):
25 N·m (2.5 kg-m, 18.0 lb-ft)

- After installation, check fuel pipes for damage, crack, deformation and contacting other parts.
- Bleed air in fuel system referring to “Air Bleeding of Fuel System” in this section.
- Check to make sure that there is no fuel leakage at each connection.

Fuel Level Gauge Inspection

Refer to “Fuel Sender Gauge” in Section 8.

Fuel Filter Removal and Installation

NOTE:

Fuel filter can not disassemble.
Replace fuel filter as an assembly, if necessary.

Removal

1) Disconnect negative (–) cable at battery.

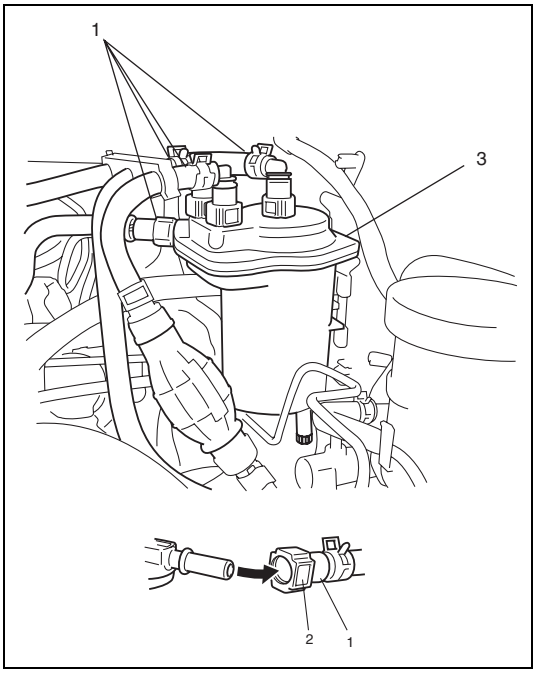

2) Pull out fuel hoses (1) with pushing lock button (2).
3) Install plugs (special tool) to openings of fuel filter (3) and fuel hose (1) in order to prevent its internal parts from dust. For detail referring to “Precaution in Fuel Delivery System” in Section 6E2.
4) Remove fuel filter (3) from its bracket.

Installation

Reverse removal procedure for installation noting the following.

- Bleed air in system referring to “Air Bleeding Procedure” in this section.
- Start engine and check that there are no fuel leakage.

Special Tool

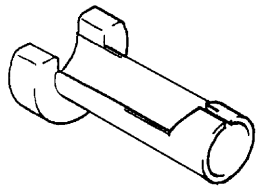

09919-47020
Quick joint remover

Tightening Torque Specification

Fastening part	Tightening torque		
	N•m	kg-m	lb-ft
Fuel level gauge bolt	10.5	1.05	7.5
Fuel tank bolt	23	2.3	17.0
Brake pipe joint bolt	11	1.1	8.0
LSPV bracket bolt	25	2.5	18.0

SECTION 6E2

ENGINE AND EMISSION CONTROL SYSTEM (K9K ENGINE)

WARNING:

For vehicles equipped with a Supplemental Restraint (Air Bag) System:

- **Service on and around the air bag system components or wiring must be performed only by an authorized SUZUKI dealer. Refer to "System Components and Wiring Location View and Connectors" under "General Description" in Section 10B in order to confirm whether you are performing service on or near the air bag system components or wiring. Please observe all WARNINGS and "Service Precautions" under "On-Vehicle Service" in Section 10B before performing service on or around the air bag system components or wiring. Failure to follow WARNINGS could result in unintentional activation of the system or could render the system inoperative. Either of these two conditions may result in severe injury.**
- **Technical service work must be started at least 90 seconds after the ignition switch is turned to the "LOCK" position and the negative cable is disconnected from the battery. Otherwise, the system may be activated by reserve energy in the Sensing and Diagnostic Module (SDM).**

CONTENTS

General Description 6E2-3
- System Diagram 6E2-3
- Electronic Control System 6E2-4
  - System wiring diagram 6E2-4
  - System location diagram 6E2-7
- Air Intake System 6E2-8
- Fuel Delivery System 6E2-9

On-Vehicle Service 6E2-10
- Idle Speed Inspection 6E2-10
- Fuel Delivery System 6E2-11
  - Precautions in fuel delivery system 6E2-11
  - Fuel delivery system components 6E2-14
  - Fuel pressure relief confirmation procedure 6E2-15
  - Fuel leakage check 6E2-15
  - High pressure pipes removal and installation 6E2-15
  - Fuel injector on-vehicle inspection 6E2-21
  - Fuel injector removal and installation 6E2-21
  - Common rail (High pressure fuel injection rail) removal and installation 6E2-23
  - Injection pump removal and installation 6E2-24
  - Venturi removal and installation 6E2-26
- Electronic Control System 6E2-27
- Engine control module (ECM) removal and installation 6E2-27
- ECM registration 6E2-28
- Glow plug removal and installation 6E2-29
- Glow plug inspection 6E2-29
- PPS (accelerator pedal position sensor) removal and installation 6E2-30
- PPS (accelerator pedal position sensor) inspection 6E2-31
- Fuel temperature sensor removal and installation 6E2-32
- Fuel temperature sensor inspection 6E2-33
- Fuel flow actuator removal and installation 6E2-33
- Fuel flow actuator inspection 6E2-35
- Engine coolant temperature sensor (ECT sensor) removal and installation 6E2-35
- Engine coolant temperature sensor (ECT sensor) inspection 6E2-36
- Camshaft position sensor (CMP sensor) removal and installation 6E2-36
- Crankshaft position (CKP) sensor (engine speed sensor) removal and installation 6E2-37
- Crankshaft position (CKP) sensor (engine speed sensor) inspection 6E2-38

External air temperature sensor removal and installation 6E2-38
External air temperature sensor inspection 6E2-39
Intake air temperature (IAT) sensor removal and installation 6E2-40
Intake air temperature (IAT) sensor inspection 6E2-40
Boost pressure sensor removal and installation 6E2-41
Boost pressure sensor inspection 6E2-41
Radiator fan control system inspection 6E2-41
Main relay and radiator fan relay inspection 6E2-42
Pre-heating unit removal and installation 6E2-42
Knock sensor removal and installation 6E2-43
EGR valve removal and installation 6E2-44
EGR valve inspection 6E2-44
Tightening Torque Specification 6E2-45
Special Tool 6E2-45

General Description

System Diagram

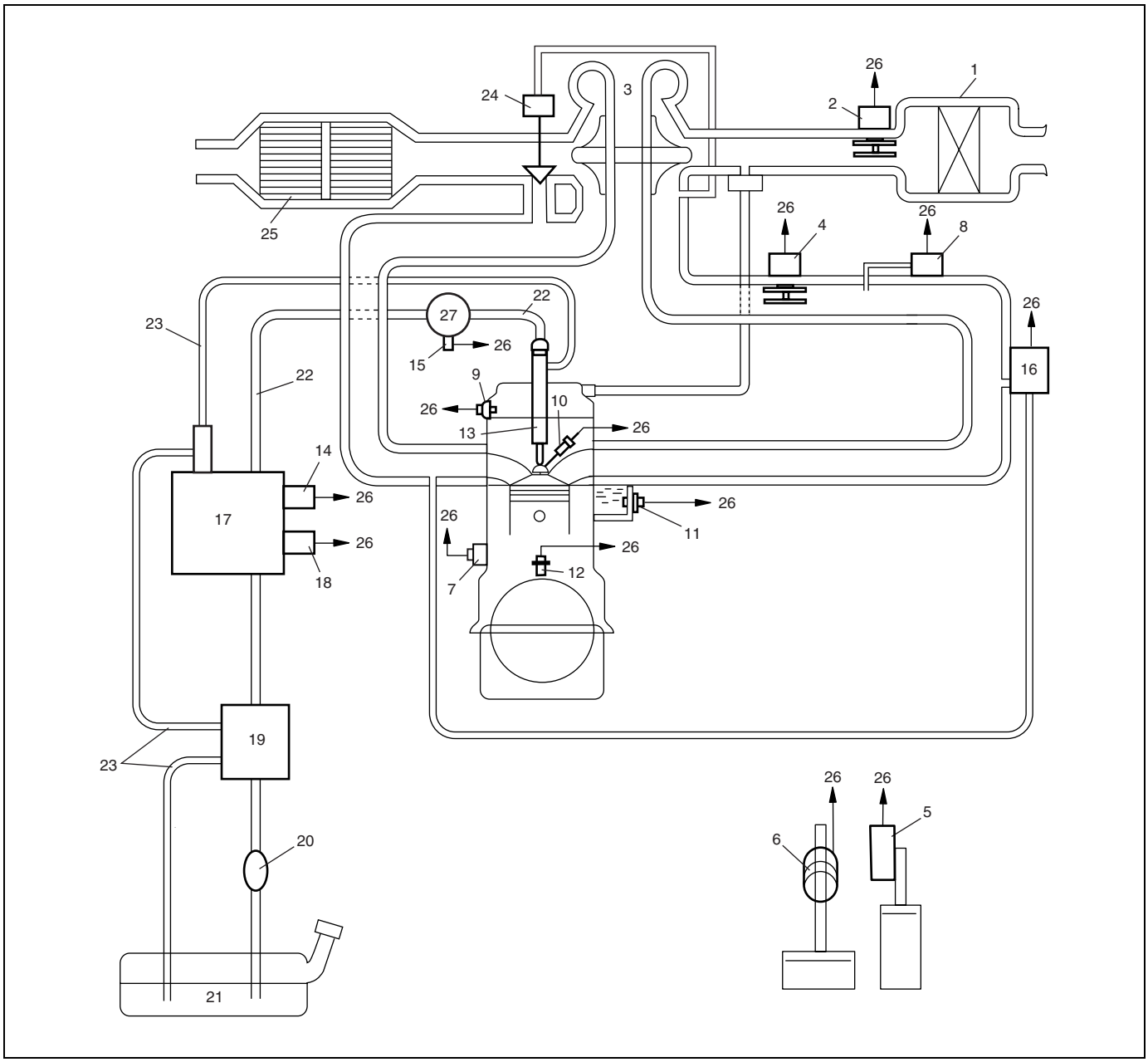

1. Air Cleaner	10. Glow plug	19. Fuel filter
2. External air temperature sensor	11. ECT sensor	20. Priming pump
3. Turbocharger	12. CKP sensor (Engine speed sensor)	21. Fuel tank
4. IAT sensor	13. Fuel injector	22. Fuel feed line
5. PPS (accelerator pedal position sensor)	14. Fuel temperature sensor	23. Fuel return line
6. Brake lamp switch	15. Fuel pressure sensor	24. Waste gate actuator
7. Knock sensor	16. EGR valve	25. Catalytic converter
8. Boost pressure sensor	17. Injection pump	26. To ECM
9. CMP sensor	18. Fuel flow actuator	27. Common rail (High pressure fuel injection rail)

Electronic Control System

System wiring diagram

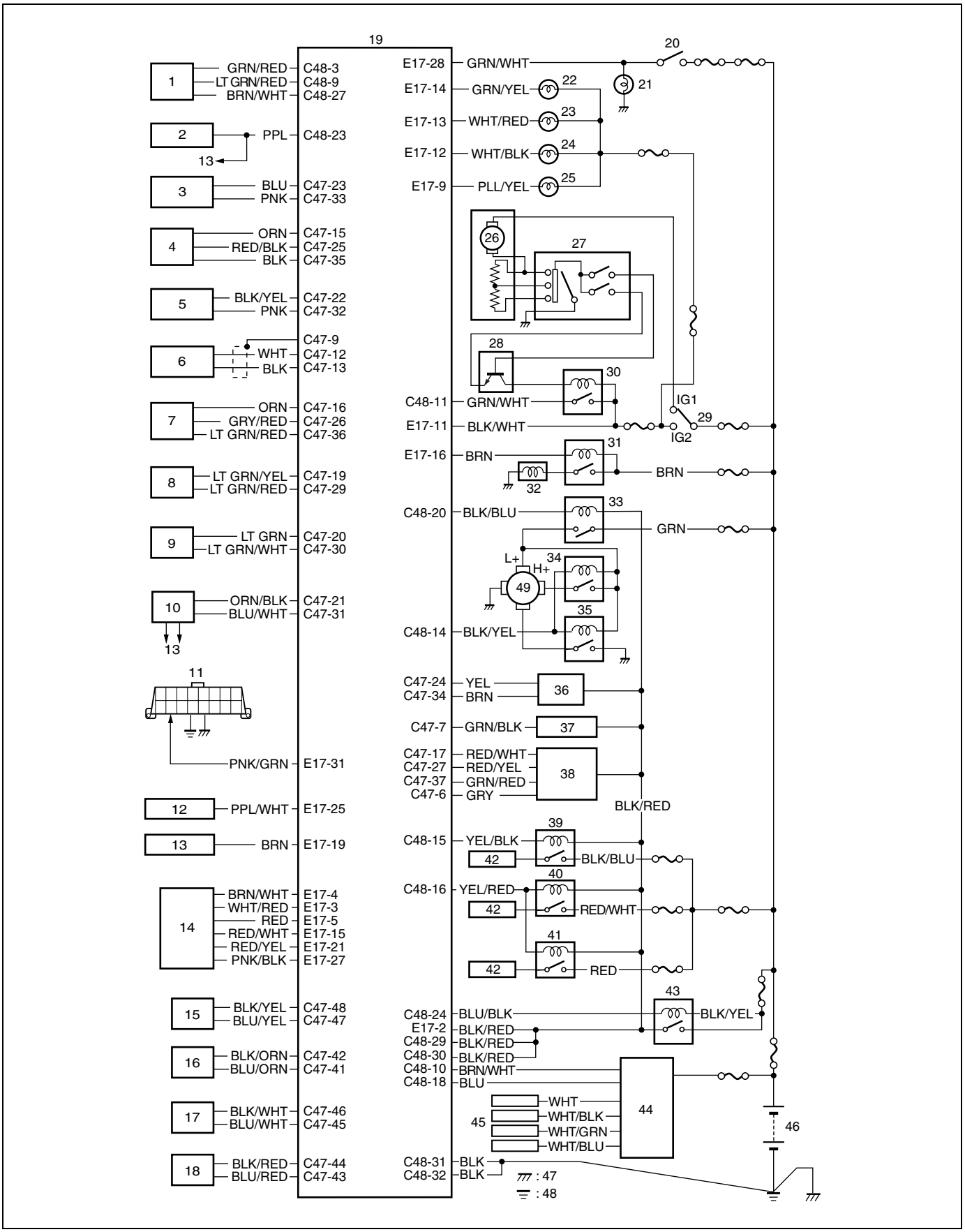

1. A/C pressure sensor (if equipped)	18. Fuel injector No.4	35. Radiator fan relay No.3
2. VSS	19. ECM	36. CMP sensor
3. CKP sensor	20. Brake (stop) lamp switch	37. Fuel flow actuator
4. Fuel pressure sensor	21. Brake lamp	38. EGR valve
5. Fuel temperature sensor	22. Glow lamp	39. Additional heater relay No.1
6. Knock sensor	23. Injection warning light (gravity 1 warning light)	40. Additional heater relay No.2
7. Boost pressure sensor	24. Red stop warning light (gravity 2 warning light)	41. Additional heater relay No.3
8. External air temperature sensor	25. Malfunction indicator lamp (MIL)	42. Additional heater plug
9. IAT sensor	26. Heater fan motor	43. Main relay
10. ECT sensor	27. Heater fan and rear defogger switch	44. Pre-heating unit
11. Data link connector	28. A/C evaporator thermister (if equipped)	45. Glow plug
12. Immobilizer control module	29. Ignition switch	46. Battery
13. Combination meter	30. A/C relay (if equipped)	47. Body ground
14. PPS (Accelerator pedal position sensor)	31. Compressor relay	48. ngine ground
15. Fuel injector No.1	32. A/C compressor (if equipped)	49. Radiator fan motor
16. Fuel injector No.2	33. Radiator fan relay No.1	
17. Fuel injector No.3	34. Radiator fan relay No.2	

ECM Connector (Terminal Arrangement Viewed from Harness Side)

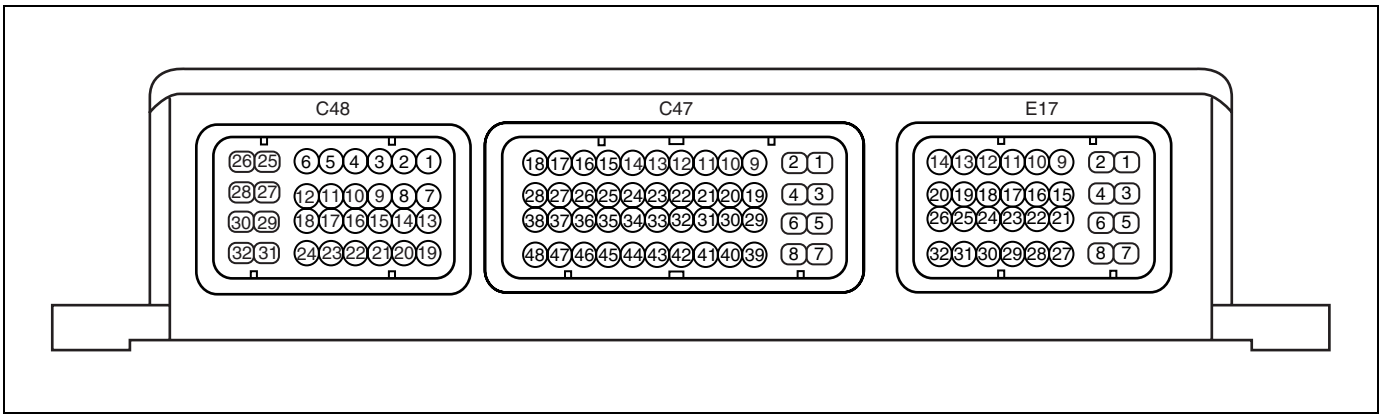

TERMINAL		CIRCUIT
E17	1	–
	2	Main power supply
	3	PPS 1 signal
	4	Power source for PPS 1
	5	Ground for PPS 1
	6	–
	7	–
	8	–
	9	Malfunction indicator lamp
	10	–
	11	Ignition switch signal
	12	Red stop warning light (gravity 2 warning light)
	13	Injection warning light (gravity 1 warning light)
	14	Glow lamp
	15	Power source for PPS 2
	16	Compressor relay output
	17	–
	18	–
	19	Engine revolution signal for combination meter
	20	–
	21	PPS 2 signal
	22	–
	23	–
	24	–
	25	Immobilizer control module input
	26	–
	27	Ground for PPS 2
	28	Brake lamp switch
	29	–
	30	–
	31	Serial communication line of data link connector 12 V
	32	–
C47	1	–
	2	–
	3	–
	4	–
	5	–

TERMINAL		CIRCUIT
C47	6	EGR valve output
	7	Fuel flow actuator output
	8	–
	9	Ground of shield wire for knock sensor
	10	–
	11	–
	12	Knock sensor signal
	13	Ground for knock sensor
	14	–
	15	Power source for fuel pressure sensor
	16	Power source for boost pressure sensor
	17	EGR valve output
	18	–
	19	External air temperature sensor signal
	20	AT sensor signal
	21	ECT sensor signal
	22	Fuel temperature sensor signal
	23	CKP sensor signal
	24	CMP sensor signal
	25	Fuel pressure sensor signal
	26	Boost pressure sensor signal
	27	EGR valve output
	28	–
	29	Ground for external air temperature sensor
	30	Ground for IAT sensor
	31	Ground for ECT sensor
	32	Ground for fuel temperature sensor
	33	Ground for CKP sensor
	34	Ground for CMP sensor
	35	Ground for fuel pressure sensor
	36	Ground for boost pressure sensor
	37	EGR valve output
	38	–
	39	–
	40	–
	41	Fuel injector No.2 output (low side)
	42	Fuel injector No.2 output (high side)
	43	Fuel injector No.4 output (low side)
	44	Fuel injector No.4 output (high side)
	45	Fuel injector No.3 output (low side)
	46	Fuel injector No.3 output (high side)

TERMINAL		CIRCUIT
C47	47	Fuel injector No.1 output (low side)
	48	Fuel injector No.1 output (high side)
C48	1	–
	2	–
	3	Power source for A/C pressure sensor
	4	–
	5	–
	6	–
	7	–
	8	–
	9	A/C pressure sensor signal
	10	Pre-heating unit diagnosis input
	11	A/C relay signal
	12	–
	13	–
	14	Radiator fan relay No.2 output
	15	Additional heater relay No.1 output
	16	Additional heater relay No.2 output
	17	–
	18	Pre-heating unit output
	19	–
	20	Radiator fan relay No.1 output
	21	–
	22	–
	23	VSS signal
	24	Main relay output
	25	–
	26	–
	27	Ground for A/C pressure sensor
	28	–
	29	Main power supply
	30	Main power supply
	31	Ground for ECM
	32	Ground for ECM

System location diagram

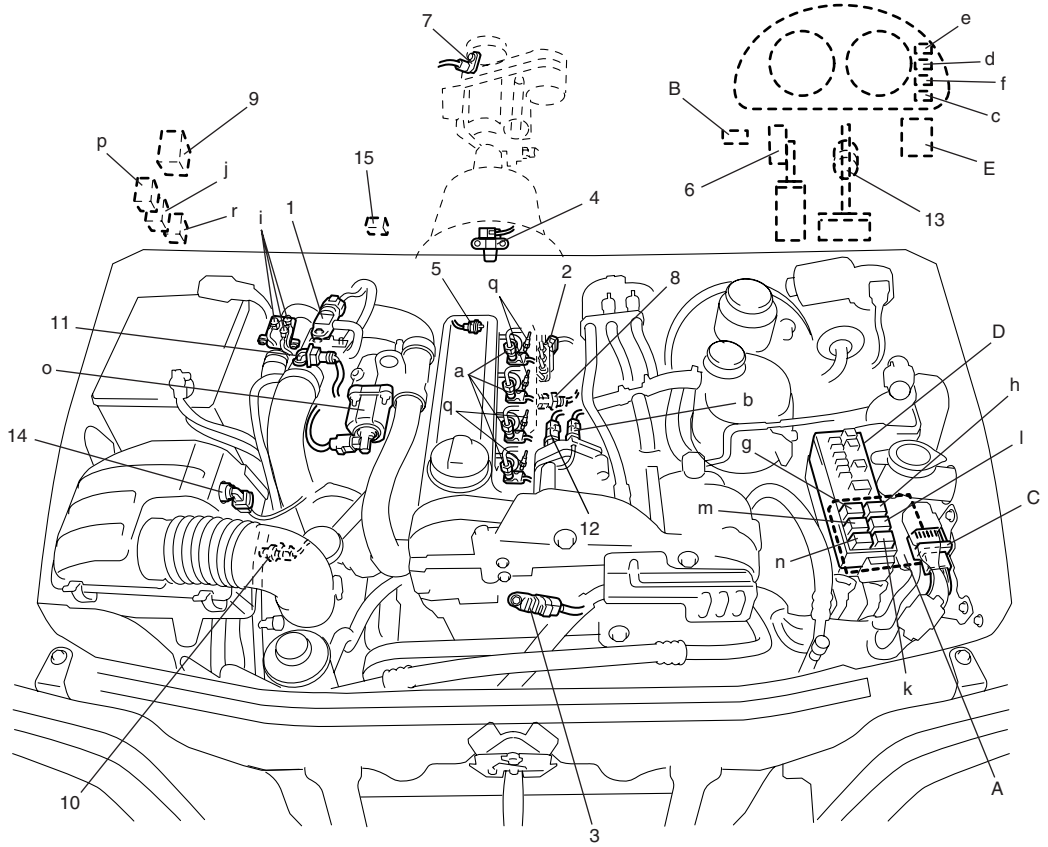

INFORMATION SENSORS	CONTROLLED DEVICES	OTHERS
1. Boost pressure sensor	a: Fuel injector	A: ECM
2. Fuel pressure sensor	b: Fuel flow actuator	B: Data link connector
3. CMP sensor	c: Malfunction indicator lamp	C: Pre-heating unit
4. CKP sensor	d: Gravity 1 warning light (injection warning light)	D: Main fuse box
5. ECT sensor	e: Glow lamp	E: Circuit fuse box
6. PPS (accelerator position sensor)	f: Gravity 2 warning light (red stop warning light)	
7. VSS	g: A/C relay (if equipped)	
8. Knock sensor	h: A/C compressor relay (if equipped)	
9. Immobilizer control module	i: Additional heater plug	
10. A/C pressure sensor	j: Additional heater relay No.1	
11. IAT sensor	k: Radiator fan relay No.1 (low)	
12. Fuel temperature sensor	l: Radiator fan relay No.2 (high)	
13. Brake lamp switch	m: Radiator fan relay No.3 (high)	
14. External air temperature sensor	n: Main relay	
15. A/C evaporator thermister	o: EGR valve	
	p: Additional heater relay No.2	
	q: Glow plug	
	r: Additional heater relay No.3	

Air Intake System

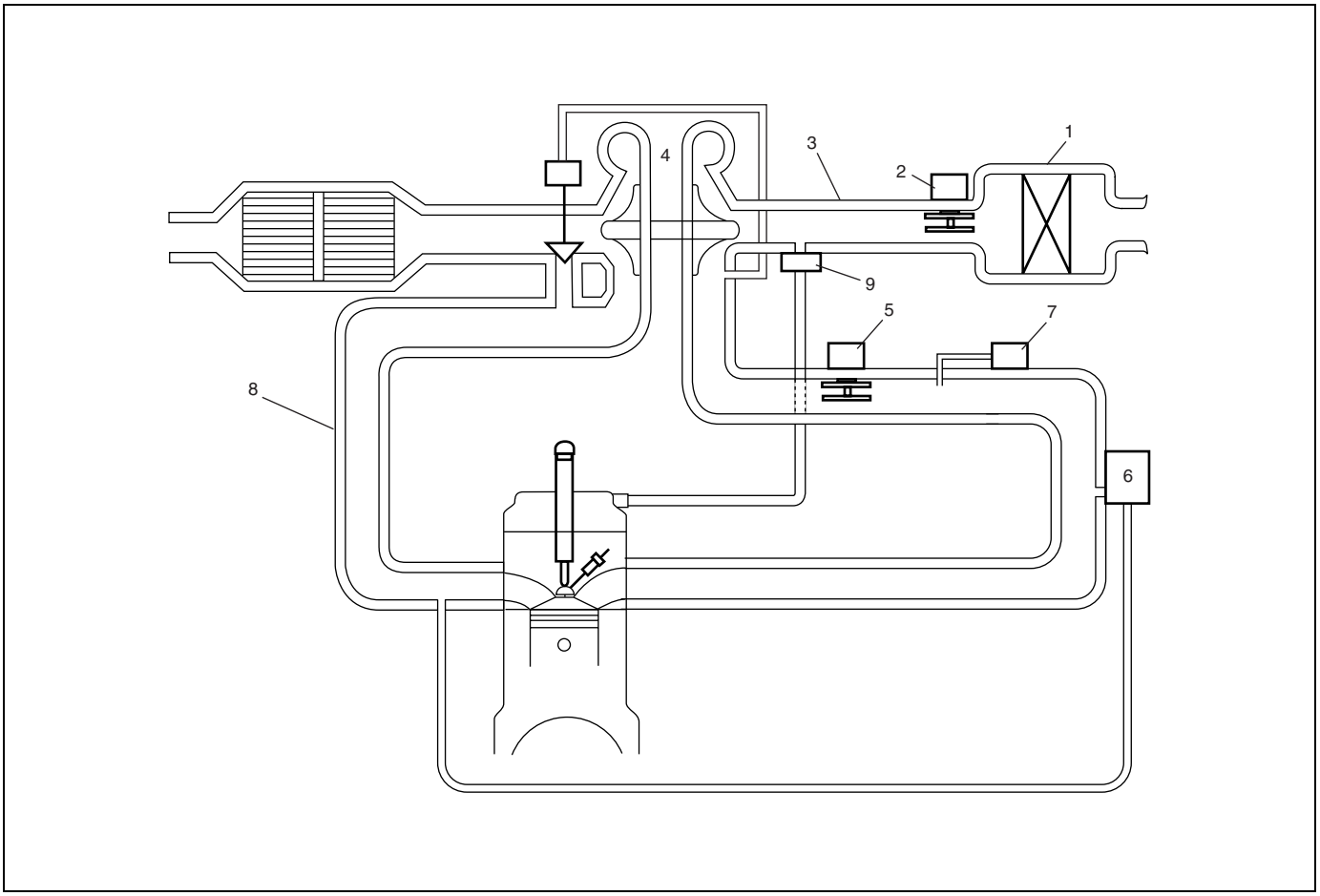

1. Air cleaner	4. Turbocharger	7. Boost pressure sensor
2. External air temperature sensor	5. IAT sensor	8. Exhaust manifold
3. Air cleaner outlet hose	6. EGR valve	9. Oil vapor recirculation valve

Fuel Delivery System

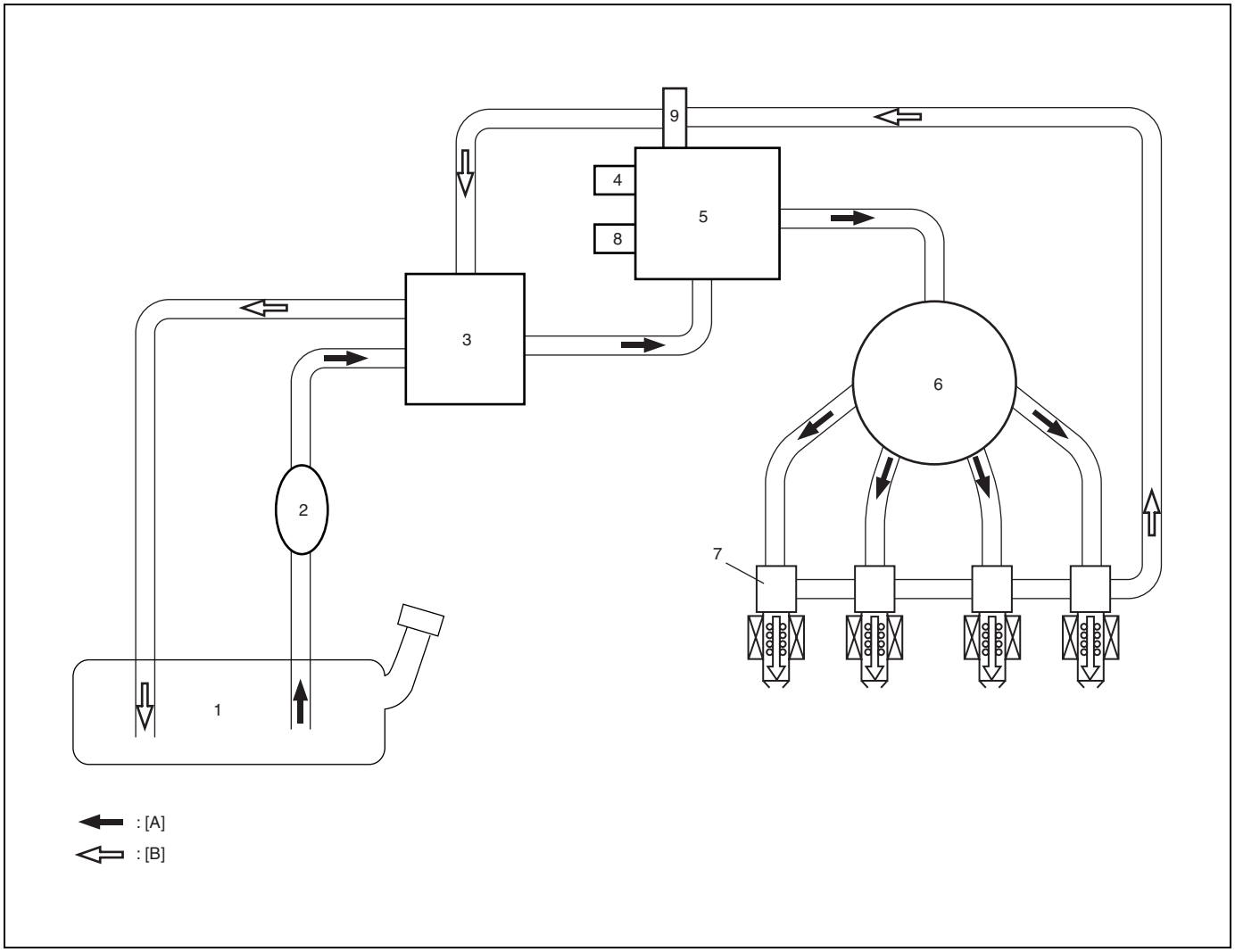

1. Fuel tank	6. Common rail (High pressure fuel injection rail)	[A]: Fuel feed line
2. Priming pump	7. Fuel injector	[B]: Fuel return line
3. Fuel filter	8. Fuel flow actuator	
4. Fuel temperature sensor	9. Venturi	
5. Injection pump		

On-Vehicle Service

Idle Speed Inspection

1) Shift transmission into Neutral.
2) Start engine and warm it up to normal operating temperature.
3) Turn all electrical loads off.
4) Using SUZUKI scan tool, verify that idle speed is within specification.

Engine speed: 730 – 880 rpm

5) If not, refer to “Table 5 Rough Idle Speed (Pumping)” or “Table 6 Idle Speed Too High or Too Low” in Section 6-2.

Fuel Delivery System

WARNING:

- **Fuel vapor is hazardous. It can very easily ignite, causing serious injury and damage. Always keep sparks and flames away from fuel. Fuel line spills and leaks are dangerous. Fuel can ignite and cause serious injuries or death and damage.**
- **Fuel can also irritate skin and eyes. To prevent this, always complete the following "Precautions".**
- **Never disconnect fuel high-pressure line between injection pump and injectors under pressure, or fuel can be sprayed out under pressure.**
  Be sure to confirm that fuel high-pressure line is not under pressure referring "Fuel pressure relief confirmation procedure" in section 6E2 before disconnecting. If it is under pressure, wait till it is not under pressure.

CAUTION:

Before servicing the fuel delivery system, read all contents described in "Precautions in Fuel Delivery System"; otherwise not only the fuel delivery system but also the engine might be damaged.

Precautions in fuel delivery system

- The system is very sensitive to contamination. The risks caused by the introduction of contamination are:
  – damage or destruction of the high pressure injection system and the engine.
  – seizing or leaking of a component.
- When servicing on the high pressure direct injection system, must be performed under very clean conditions. This means that no impurities (particles a few microns in side) get into the system during dismantling or into the circuits via the fuel unions.
- The cleanliness principle must be applied from the filter to the injectors.
- Contamination is caused by:
  – metal or plastic chips,
  – paint,
  – fibres: boxes, brushes, paper, clothing, cloths,
  – foreign bodies such as hair,
  – ambient air,
  – etc.
- It is not possible to clean the engine using a high pressure washer because of the risk of damaging connections. In addition, moisture may collect in the connectors and create electrical connection problems.
- The system can inject the diesel into the engine at a pressure up to 1400 bars. Before carrying out any work, check that the injector rail is not under pressure and that the fuel temperature is not too high.

Instructions to be Followed Before Any Work is Carried out on The Injection System

- Ensure that you have the plugs (1) for the unions to be opened. Plugs are to be used once only. After use, they must be thrown away (once used they are soiled and cleaning is not sufficient to make them reusable). Unused plugs must be thrown away.

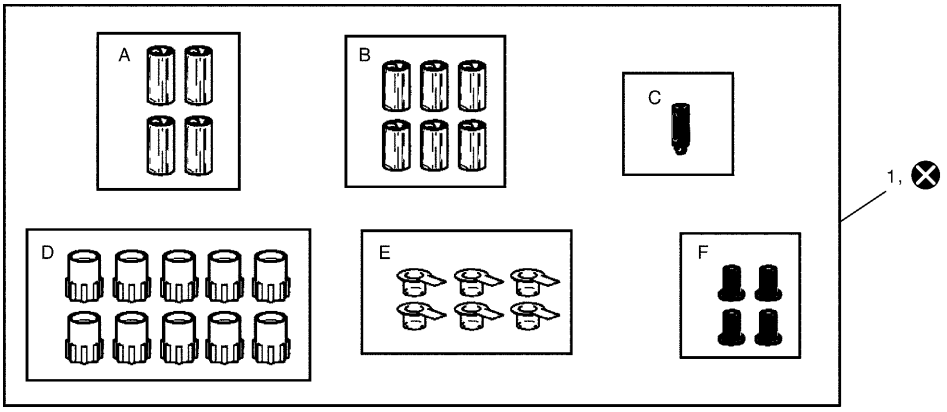

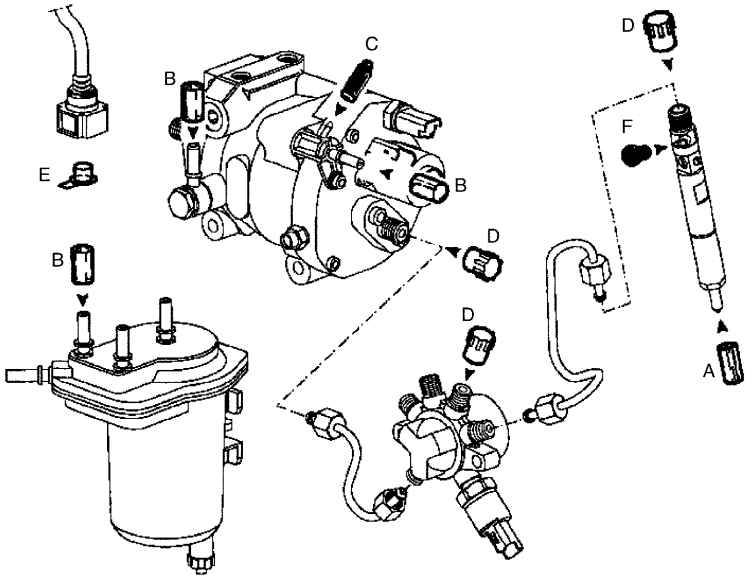

1.	Plug (Cap set available as a spare part: parts number 15733-84A00)
⊗	Do not reuse.

- Ensure that you have hermetically resealable plastic bags for storing removed parts. Stored parts will therefore be less subject to the risk of impurities. The bags must be used only once, and after use they must be thrown away.

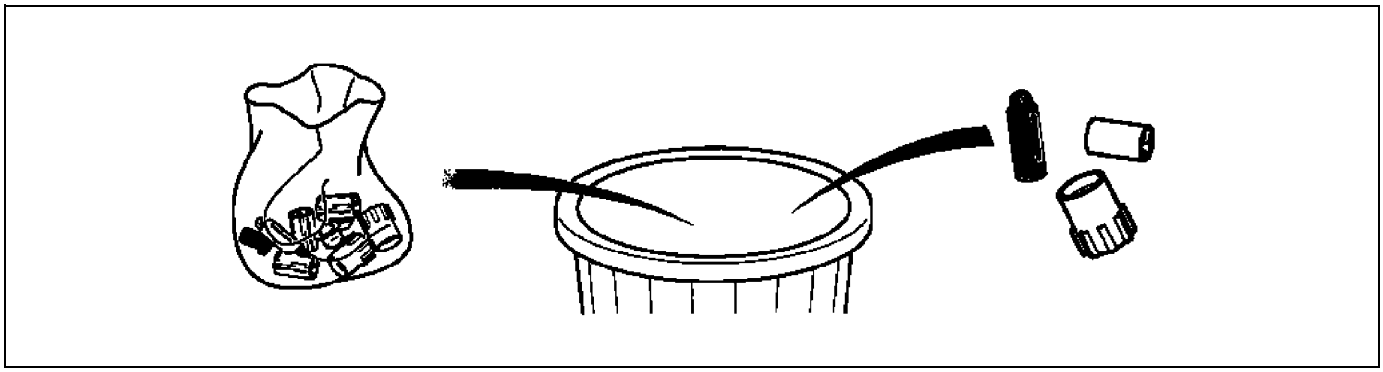

- Make sure that lint-free towelettes. The use of a normal cloth or paper for cleaning purposes is forbidden. These are not lint-free and may contaminate the fuel circuit of the system. Each lint-free cloth should only be used once.

Instructions to be Followed Before Opening The Fuel Circuit

- For each operation, use new thinner (used thinner contains impurities). Pour it into a clean receptacle.
- For each operation, use a clean brush which is in good condition (the brush must not shed its bristles).
- Use a brush and thinners to clean the connections to be opened.
- Blow compressed air over the cleaned parts (tools, cleaned the same way as the parts, connections and injection system zone). Check that no bristles remain adhered.
- Wash your hands before and during the operation if necessary.
- When wearing leather protective gloves, cover these with latex gloves.

Instructions to be Followed During The Operation

- As soon as the circuit is open, all openings must be plugged to prevent impurities from entering the system by using plug (available as a spare part). They must not, under any circumstances, be reused.
- Close the hermetically sealed bag, even if it has to be reopened shortly afterwards. Ambient air carries contamination.
- All components of the injection system that are removed must be stored in a hermetically sealed plastic bag once the plugs have been inserted.
- The use of a brush, thinner, bellows, sponge or normal cloth is strictly forbidden once the circuit has been opened.
  These items are likely to allow impurities to enter the system.
- A new component replacing an old one must not be removed from its packaging until it is to be fitted to the vehicle.

Fuel delivery system components

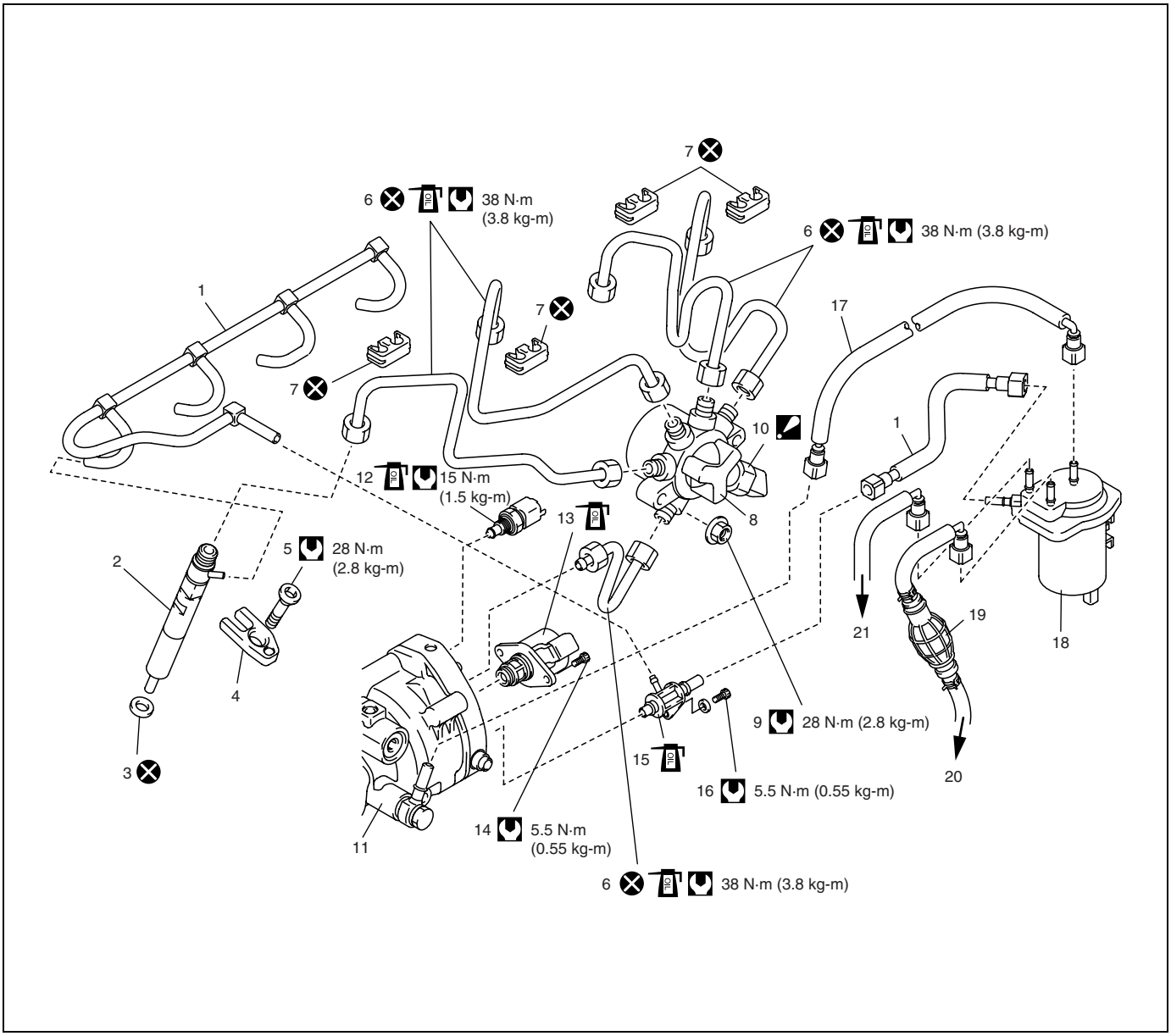

1. Fuel return hose	7. Clip	13. Fuel flow actuator : Apply oil (spare parts) to O-ring.	19. Priming pump
2. Fuel injector	8. Common rail	14. Fuel flow actuator bolt	20. To fuel feed pipe
3. Sealing washer	9. Common rail nut	15. Venturi : Apply oil (spare parts) to O-ring.	21. To fuel return pipe
4. Fuel injector bracket	10. Fuel pressure sensor : It is not possible to remove fuel pressure sensor from common rail.	16. Venturi bolt	: Tightening torque
5. Fuel injector bolt	11. Injection pump	17. Fuel feed hose	: Do not reuse.
6. High pressure pipe :Apply oil (included in spare parts kit) to all around thread part of union nut.	12. Fuel temperature sensor : Apply oil (spare parts) to O-ring.	18. Fuel filter	

Fuel pressure relief confirmation procedure

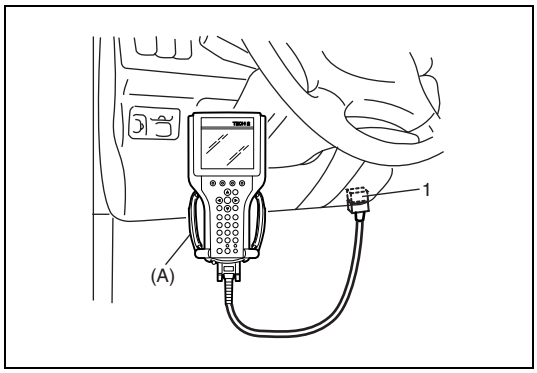

1) Check that engine is cold.
2) Connect SUZUKI scan tool to DLC (1) with ignition switch turned OFF.

Special tool
(A): SUZUKI scan tool

3) Turn ON ignition switch.
4) Confirm that fuel high-pressure line is not under pressure by using SUZUKI scan tool.

Fuel leakage check

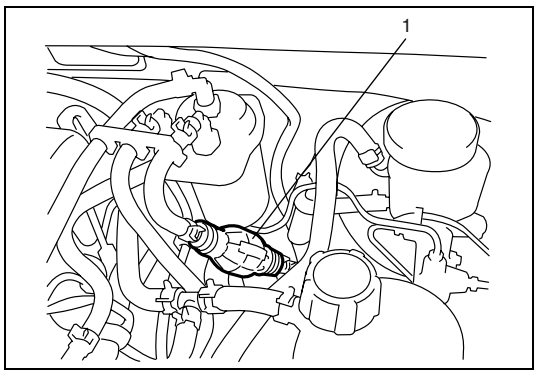

1) Prime fuel line using priming pump (1).
2) Check for fuel leakage of low pressure circuit.
3) Start engine and run it at idle speed for about 10 seconds.
4) Stop engine and then check for fuel leakage in each part, which was serviced.
5) Start engine and run it at 4000 r/min. for about 10 seconds.
6) Stop engine and then check for fuel leakage in each part, which was serviced.

High pressure pipes removal and installation

Removal

1) Check that engine is cold and fuel pressure is not under pressure referring to “Fuel Pressure Relief Confirmation Procedure” in this section.
2) Disconnect negative cable at battery.

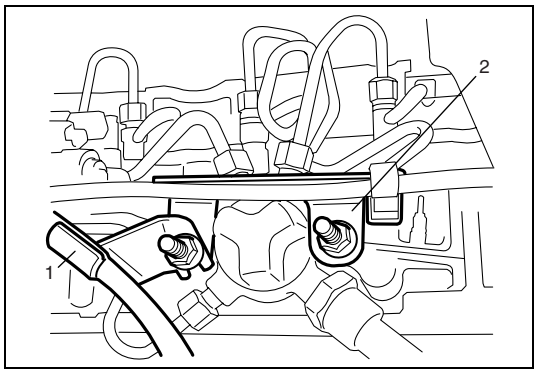

3) Remove oil level gauge guide (1) and engine harness clamp bracket (2).

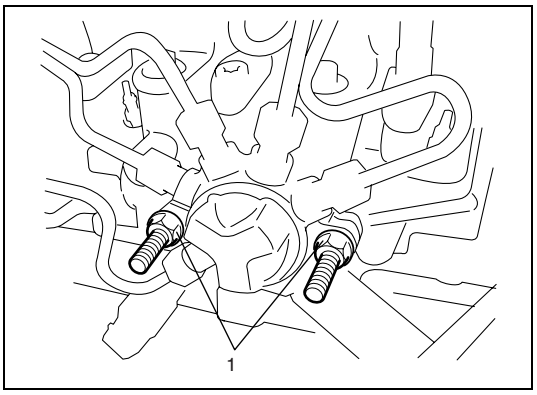

4) Loosen common rail nuts (1) a few turns.

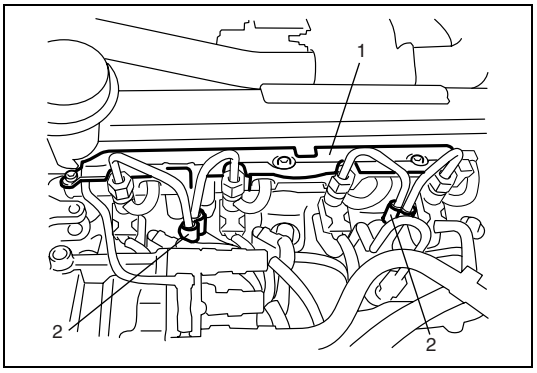

5) Remove injector cover and injector return hose cover (1).
6) Remove clip (2) connecting high pressure pipes.

7) Remove high pressure pipes as follows.

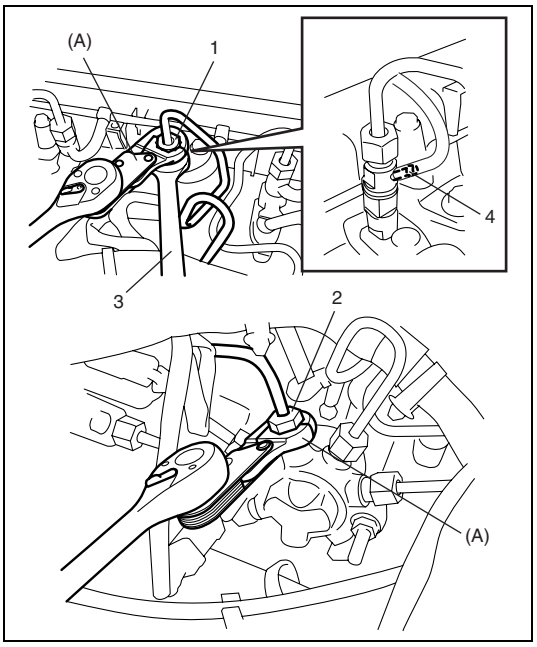

a) For fuel injector – common rail pipe
   i) Loosen union nut of fuel injector side (1).
   ii) Loosen union nut of common rail side (2).

CAUTION:
When loosing union nut of fuel injector side, hold fuel injector with wrench (3) as shown.
Do not damage fuel return pipe (4) of fuel injector.

Special tool
(A): 09911-78110

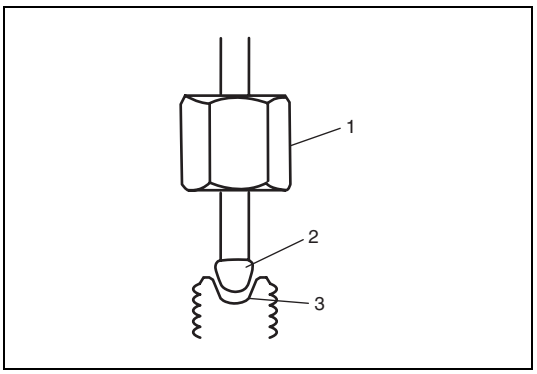

iii) Move union nut (1) along pipe keeping flange part (2) in contact with taper (3).

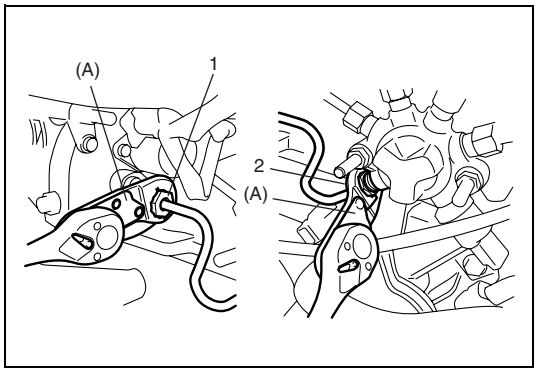

b) For injection pump – common rail pipe

i) Loosen union nut of injection pump side (1).
ii) Loosen union nut of common rail side (2).

Special tool
(A): 09911-78110

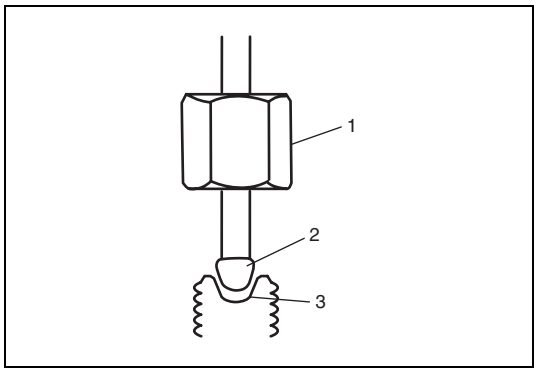

iii) Move union nut (1) along pipe keeping flange part (2) in contact with taper (3).

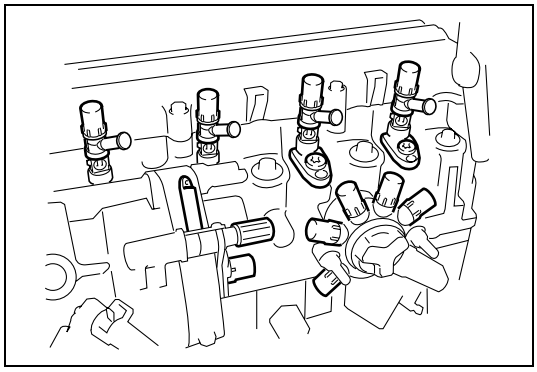

8) Plug all joint part of disconnected fuel injection circuit with cap available as a spare part to prevent them from entering dust. (Refer to “Precautions in Fuel Delivery System” in this section for parts number and handling).

Installation

CAUTION:
Do not reuse high pressure pipe because it has the possibility that fuel leaks out.

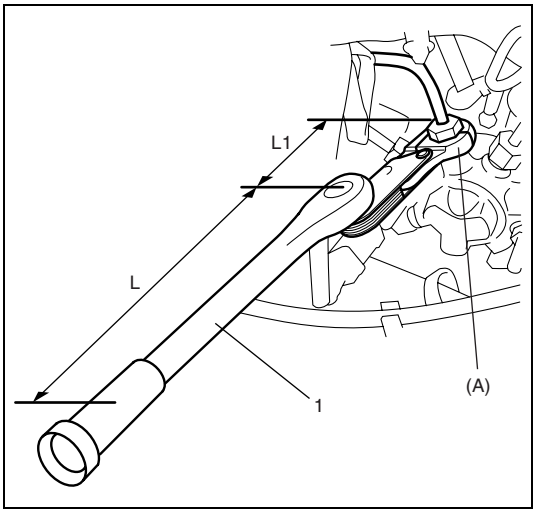

CAUTION:
In case of using extension special tool combined with torque wrench, reading value of torque wrench is smaller than specified tightening torque. When using extension special tool, reading value should be calculated according to below formula.

Tightening torque formula
M = T x L/(L + L1)
M: Reading value using extension special tool
T: Specified tightening torque
L: Length of torque wrench
L1: Length of special tool

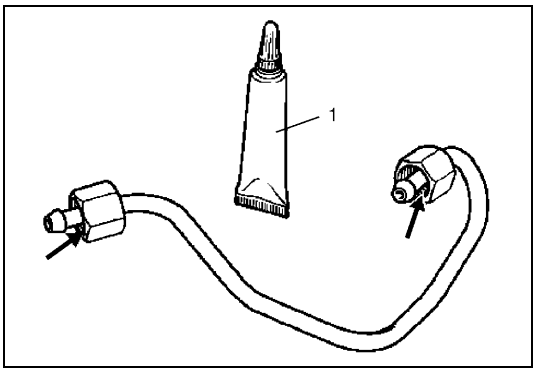

NOTE:
- **Fit injection pump – common rail pipe before common rail - fuel injector pipes.**
- **Before installing new high pressure pipe, move union nuts of pipe then apply oil (1) (included in spare parts kit) to all around thread part of union nut.**

1) Remove high pressure pipes as follows.
   a) For fuel injector – common rail pipe
      i) Remove plugs (dust preventing cap) from common rail outlet and fuel injector inlet.

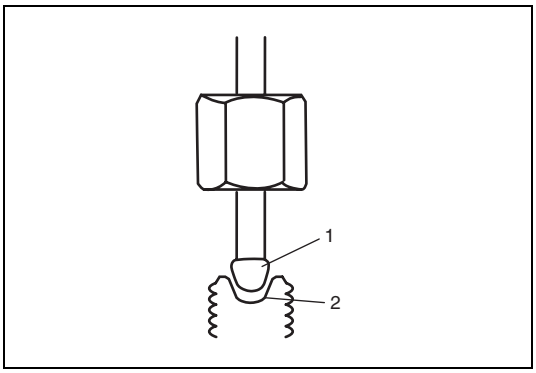

      ii) Insert high pressure pipe flange part (1) into taper (2) of fuel injector inlet.
      iii) Insert high pressure pipe flange part (1) into taper (2) of common rail outlet.

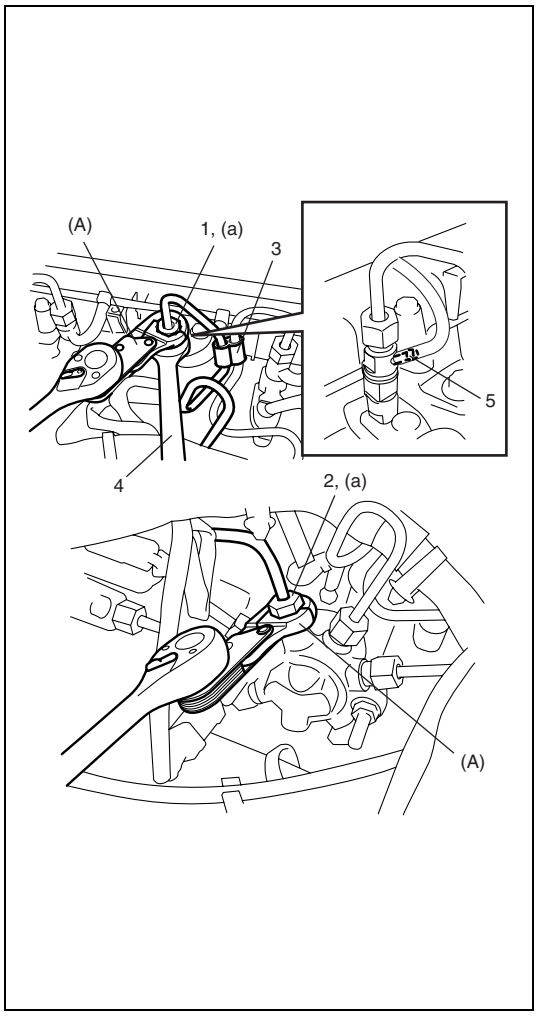

iv) Tighten fuel injector union nut (1) then common rail union nut (2) by hand.
v) Install new clip (3) to high pressure pipes.
vi) Tighten fuel injector union nut then common rail union nut to specified torque using special tool.

CAUTION:
- **Do not touch pipes with wrench when tightening union nuts.**
- **When tightening union nut of fuel injector side, hold fuel injector with wrench (4) as shown.**
- **Do not damage fuel return pipe (5) of fuel injector.**

Special tool
(A): 09911-78110

Tightening torque
High pressure pipe union nut
(a): 40 N·m (4.0 kg-m, 29.0 lb-ft) (See NOTE below.)

NOTE:

In case of using extension special tool combined with torque wrench, reading torque depends on the length of the torque wrench.
Therefore, calculate reading torque by using "Tightening Torque Formula" described earlier in this installation procedure.

b) For injection pump – common rail pipe
i) Remove plugs (dust prevent cap) from common rail outlet and fuel injector inlet.

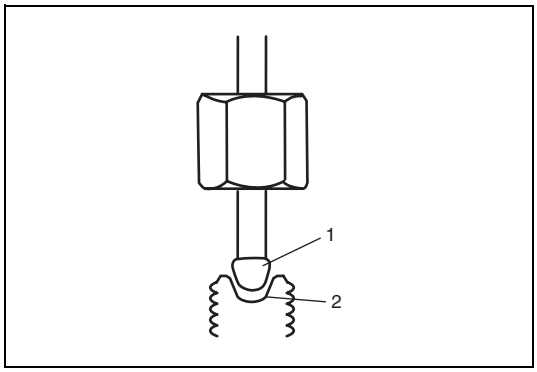

ii) Insert high pressure pipe flange part (1) into taper (2) of fuel injector inlet.
iii) Insert high pressure pipe flange part (1) into taper (2) of common rail outlet.

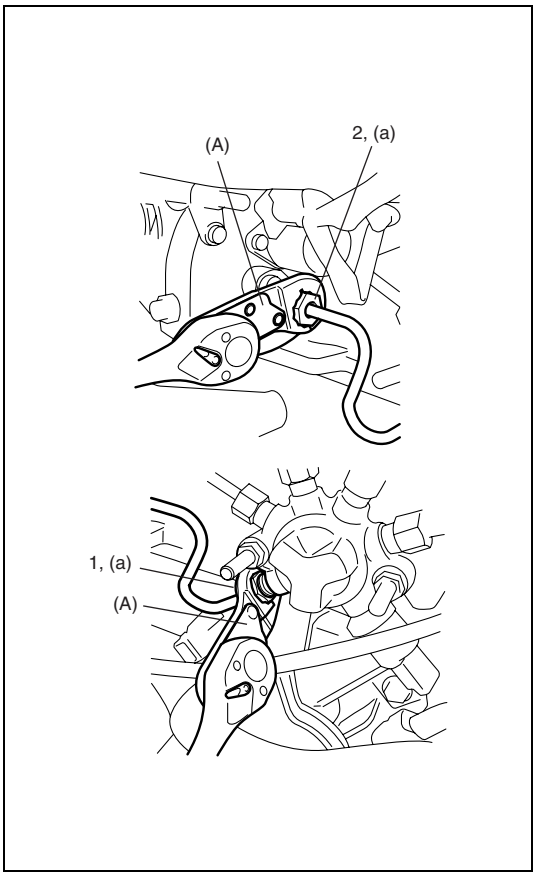

iv) Tighten common rail union nut (1) then injection pump union nut (2) by hand.
v) Tighten common rail union nut then injection pump union nut to specified torque using special tool.

CAUTION:
Do not touch pipes with wrench when tightening union nuts.

Special tool
(A): 09911-78110

Tightening torque
High pressure pipe union nut
(a): 40 N·m (4.0 kg-m, 29.0 lb-ft) (See NOTE below.)

NOTE:
In case of using extension special tool combined with torque wrench, reading torque depends on the length of the torque wrench.
Therefore, calculate reading torque by using "Tightening Torque Formula" described earlier in this installation procedure.

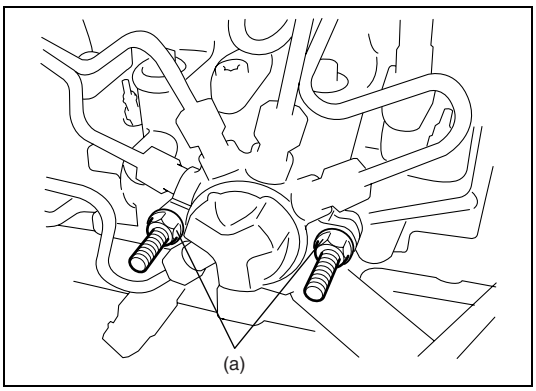

2) Tighten common rail nuts to specified torque.

Tightening torque
Common rail nut
(a): 28 N·m (2.8 kg-m, 20.5 lb-ft)

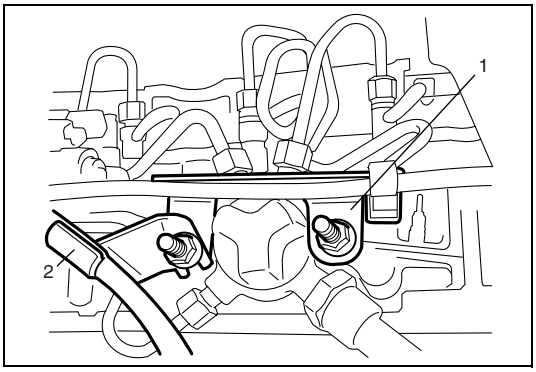

3) Install engine harness clamp bracket (1) and oil level gauge guide (2).
Tighten oil level gauge guide nuts to specified torque.

Tightening torque
Oil level gauge guide nut
(a): 21 N·m (2.1 kg-m, 15.5 lb-ft)

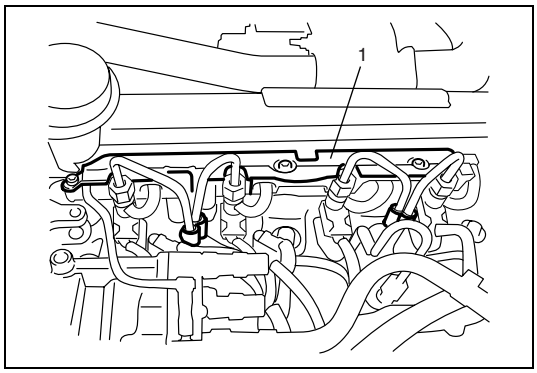

4) Install injector return hose cover (1) and injector cover.

5) Connect negative cable to battery.
6) Check fuel leakage referring to “Fuel Leakage Check” in this section.

Fuel injector on-vehicle inspection

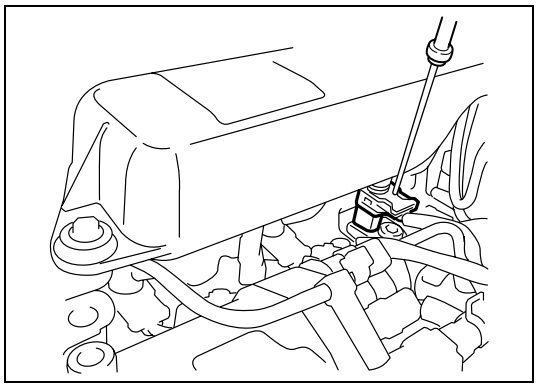

Using sound scope or such, check operating sound of injector when engine is running or cranking.
Cycle of operating sound should vary according to engine speed.
If no sound or an unusual sound is heard, confirm that check result of each step is in good condition referring to “DTC P0200 Injector Circuit” in Section 6-2.
If injector circuit is in good condition, replace fuel injector referring to “Fuel Injector Removal and Installation” in this section.

Fuel injector removal and installation

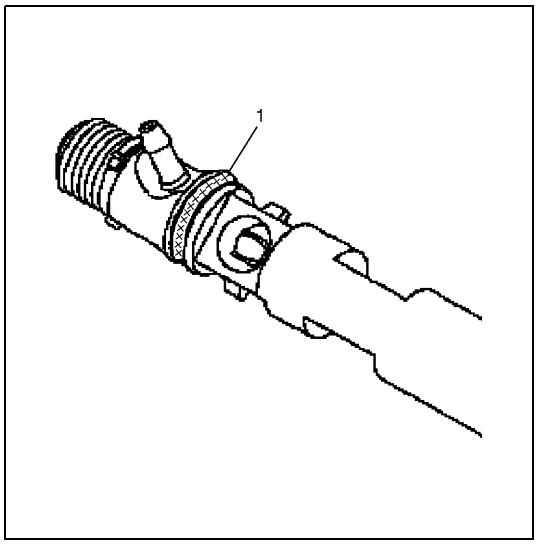

NOTE:

The calibration code (1) is the code that is given to each fuel injector, and it represents the performance characteristics of the fuel injector. It is registered in ECM, and ECM controls fuel injection according to the performance characteristics of the fuel injector. Therefore, after removing fuel injectors, be sure to install them as they were. In case that the fuel injectors were replaced with new ones, be sure to register each calibration code in ECM referring to “ECM Registration” in this section. If it is not registered correctly, DTC is stored in ECM and warning light is turned ON. Also calibration codes registration in ECM can be checked by SUZUKI scan tool.

Removal

1) Check that engine is cold and fuel pressure is not under pressure referring to “Fuel Pressure Relief Confirmation Procedure” in this section.
2) Disconnect negative cable at battery.

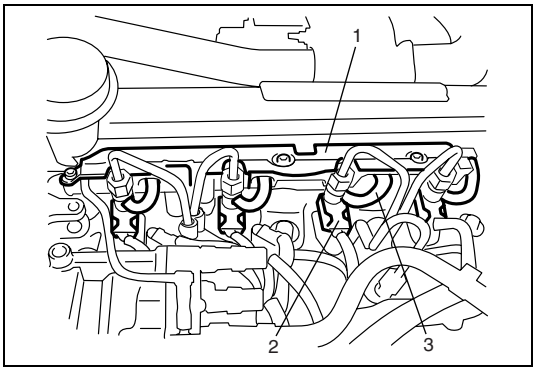

3) Remove injector cover and injector return hose cover (1).
4) Disconnect fuel injector connector (2).
5) Disconnect return hose (3) from fuel injector.

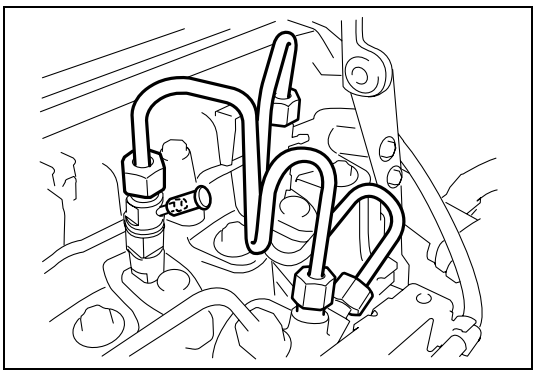

6) Plug fuel return pipe of fuel injector with cap available as a spare part to prevent them from entering dust. (Refer to “Precautions in Fuel Delivery System” in this section for parts number and handling.)

7) Remove high pressure pipe referring to “High Pressure Pipes Removal and Installation” in this section.

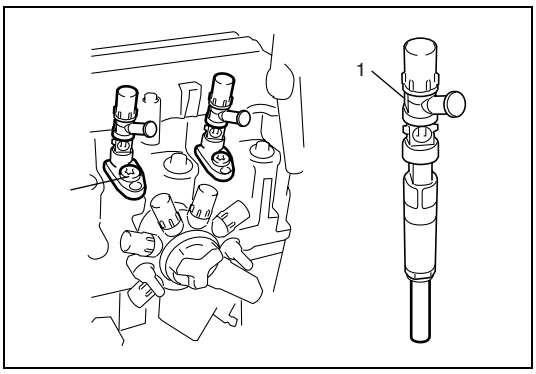

8) Remove fuel injector (1) from cylinder head.
9) Remove searing washer from cylinder head hole.
10) Plug fuel injector nozzle with cap available as a spare part to prevent them from entering dust. (Refer to “Precautions in Fuel Delivery System” in this section for parts number and handling.)

Installation

1) Clean fuel injector installing hole of cylinder head, fuel injector body and fuel injector bracket using a lint-free cloth dipped in clean solvent.

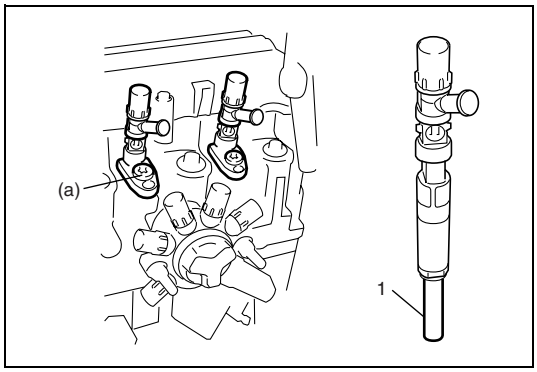

2) Remove plug (dust preventing cap) (1) from fuel injector nozzle.
3) Install new searing washer to cylinder head.
4) Install fuel injector to cylinder head.
   Tighten fuel injector bracket bolt to specified torque.

Tightening torque
Fuel injector bracket bolt
(a): 28 N·m (2.8 kg-m, 20.5 lb-ft)

5) Install new high pressure pipe referring to “High Pressure Pipes Removal and Installation” in this section.

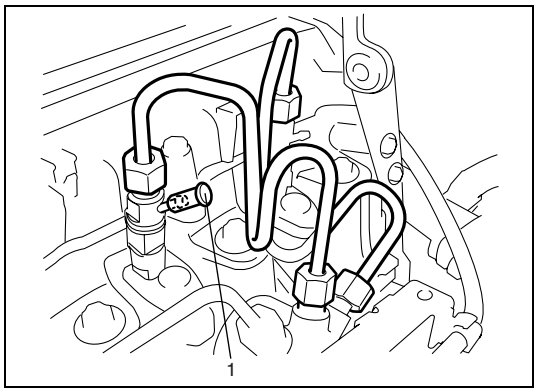

6) Remove plug (dust preventing cap) (1) from fuel return pipe of fuel injector.

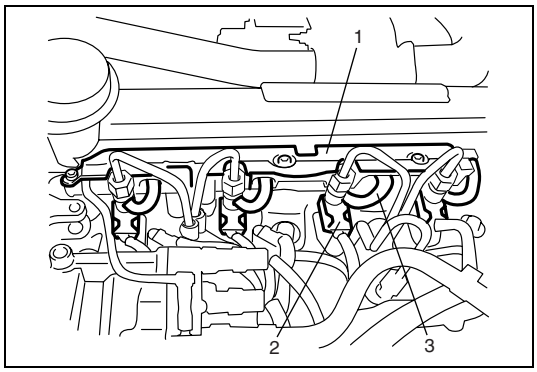

7) Connect return hose (3) to fuel injector.
8) Connect fuel injector connector (2).
9) Install return hose cover (1) and high pressure pipe cover.
10) Connect negative cable to battery.
11) Check fuel leakage referring to “Fuel Leakage Check” in this section.

Common rail (High pressure fuel injection rail) removal and installation

CAUTION:

Never remove fuel pressure sensor from common rail because this may cause fuel circuit contamination problems. If fuel pressure sensor fails, common rail and all high pressure pipes must be replaced.

Removal

1) Check that engine is cold and fuel pressure is not under pressure referring to “Fuel Pressure Relief Confirmation Procedure” in this section.
2) Disconnect negative cable at battery.

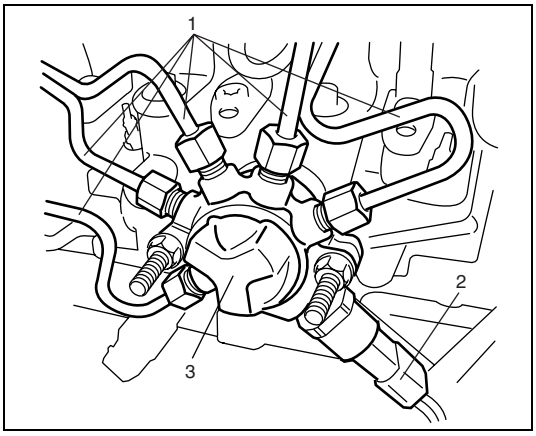

3) Remove all high pressure pipes (1) referring to “High Pressure Pipes Removal and Installation” in this section.
4) Disconnect connector from fuel pressure sensor (2).
5) Remove common rail (3).

Installation

1) Install common rail and tighten nuts (1) temporarily by hand.

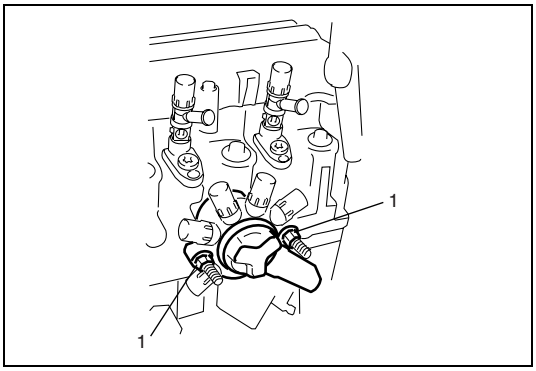

2) Install new high pressure pipes and then tighten common rail nut referring to “High Pressure Pipes Removal and Installation” in this section.
3) Connect connector to fuel pressure sensor.
4) Connect negative cable to battery.
5) Check fuel leakage referring to “Fuel Leakage Check” in this section.

Injection pump removal and installation

CAUTION:

It is strictly forbidden to remove any injection pump pulley marked number 070 575 from pump. If the pump is being replaced, the pump must be replaced with pulley as a set.

Removal

1) Check that engine is cold and fuel pressure is not under pressure referring to “Fuel Pressure Relief Confirmation Procedure” in this section.
2) Disconnect negative cable at battery.
3) Remove timing belt referring to “Timing Belt and Belt Tensioner Removal and Installation” in Section 6A2.

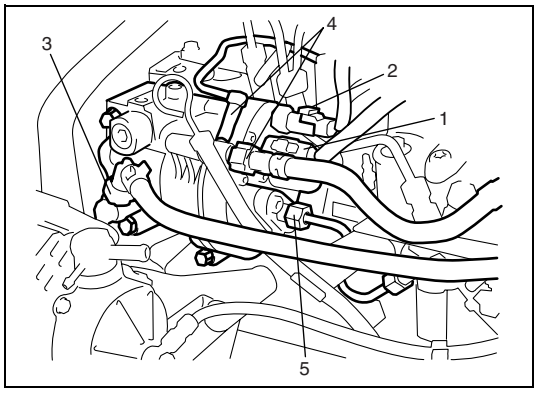

4) Disconnect connectors from fuel flow actuator (1) and fuel temperature sensor (2).
5) Disconnect fuel feed hose (3) and fuel return hoses (4) from injection pump.
6) Remove high pressure pipe (5) referring to “High Pressure Pipes Removal and Installation” in this section.

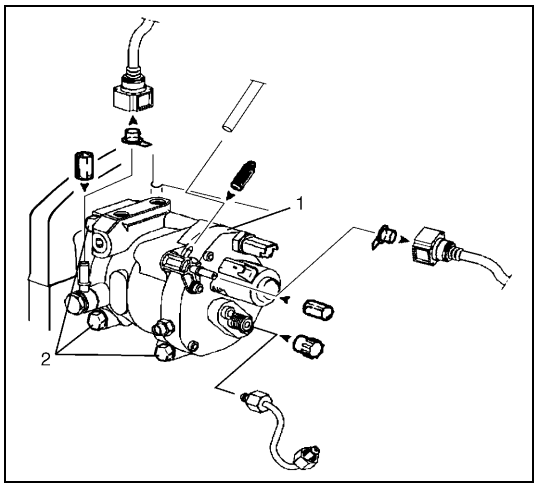

7) Plug all joint part of disconnected fuel injection circuit with cap available as a spare part to prevent them from entering dust. (Refer to “Precautions in Fuel Delivery System” in this section for parts number and handling.)
8) Remove injection pump (1) from cylinder head by removing 3 bolts (2).

Installation

Reverse removal procedure for installation noting the following.

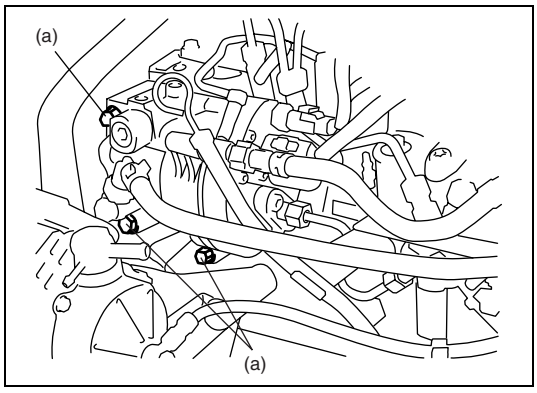

- Tighten injection pump bolts to specified torque.

Tightening torque
Injection pump bolt (a): 21 N·m (2.1 kg-m, 15.5 lb-ft)

- Install new high pressure pipe referring to “High Pressure Pipes Removal and Installation” in this section.
- Install timing belt referring to “Timing Belt and Belt Tensioner Removal and Installation” in Section 6A2.
- Check fuel leakage referring to “Fuel Leakage Check” in this section.

Venturi removal and installation

Removal

1) Check that engine is cold and fuel pressure is not under pressure referring to “Fuel Pressure Relief Confirmation Procedure” in this section.

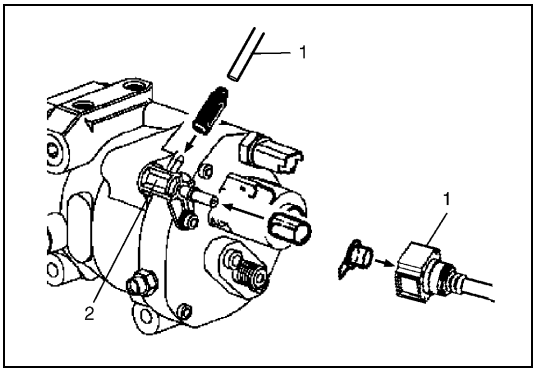

2) Disconnect return hoses (1) from venturi (2) on injection pump.
3) Plug disconnected hose and venturi on injection pump with cap available as a spare part to prevent them from entering dust. (Refer to “Precautions in Fuel Delivery System” in this section for parts number and handling.)
4) Remove venturi from injection pump.

Installation

Reverse removal procedure for installation noting the following.

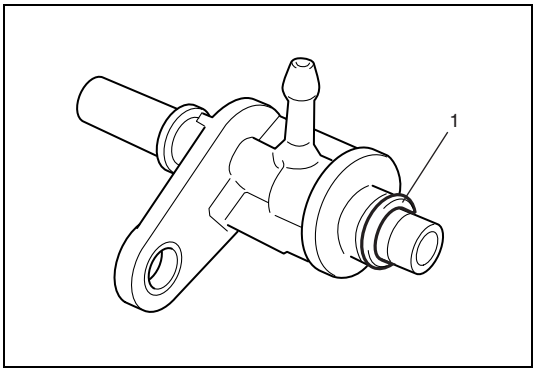

- Apply oil (spare parts) to O-ring (1) of venturi.
- Be careful not to damage O-ring when installing venturi.

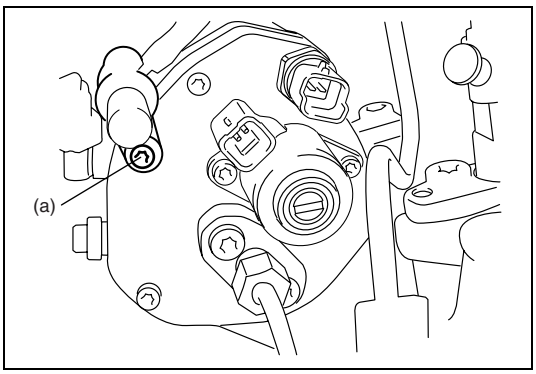

- Tighten venturi bolt to specified torque.

Tightening torque
Venturi bolt (a): 5.5 N·m (0.55 kg-m, 4.0 lb-ft)

- Check fuel leakage referring to “Fuel Leakage Check” in this section.

Electronic Control System

Engine control module (ECM) removal and installation

CAUTION:
As ECM consists of precision parts, be careful not to expose it to excessive shock.

Removal

NOTE:
When ECM is replaced, register vehicle specification (injector calibration code and equipment such as additional heater plug and air conditioning) into ECM referring to "ECM Registration" in this section.

1) Disconnect negative cable at battery.

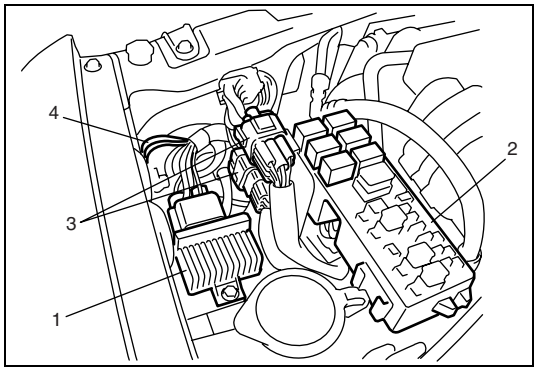

2) Detach pre-heating unit (1), relay box (2) and harness connectors (3) from ECM bracket.
3) Disconnect ground wire harness (4) from vehicle body.

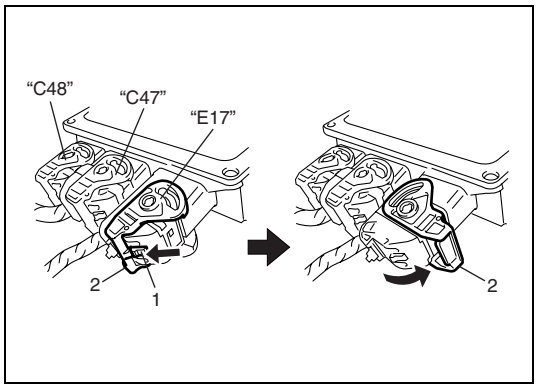

4) Disconnect connectors from ECM in order of "E17", "C47" and "C48" as follows.
   a) Push lock (1) to release locking of lock lever (2).
   b) Turn the lock lever to arrow direction until it stops.

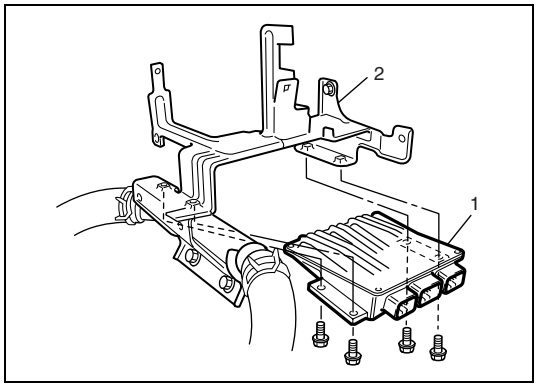

5) Remove ECM (1) from ECM bracket (2).

Installation

Reverse removal procedure for installation.

ECM registration

The following vehicle information is registered in ECM.

- Fuel injector calibration codes
- Immobilizer control module/ECM code
- Vehicle configurations (equipment such as additional heater plug and air conditioning)

If ECM is replaced, this information save to be registered into the new ECM.
If one or more fuel injector(s) is replaced, register each fuel injector calibration code(s) into the ECM, which is currently in use.

NOTE:

The immobilizer control module/ECM code registered in ECM cannot be erased or overwritten. If it is necessary to change the code (i.e. loss of ignition key and etc.), replace a ECM and a pair of keys as a set.

Registration Table

Replacement part	Register data	Reference
ECM	• Fuel injector calibration codes • Immobilizer control module/ECM code • Vehicle configurations (equipment such as additional heater plug and air conditioning)	Go to “Registration Procedure for the ECM”.
Fuel injector(s)	• Fuel injector calibration code	Go to “Registration Procedure for the Fuel Injector calibration code”.

Registration Procedure for the ECM

1) Using SUZUKI scan tool, read and save the fuel injector calibration code from ECM into SUZUKI scan tool (Refer to “Tech 2 Operator’s Manual”).

NOTE:

If the fuel injector calibration code can not be read out using SUZUKI scan tool, register the fuel injector calibration code of each fuel injector manually into ECM after replacing the ECM by reading the fuel injector calibration code on each fuel injector by using SUZUKI scan tool (Refer to “Tech 2 Operator’s Manual”).

2) Replace ECM referring to “ECM Removal and Installation” in this section.
3) Register the fuel injector calibration code into ECM from SUZUKI scan tool (Refer to “Tech 2 Operator’s Manual”).
4) Using SUZUKI scan tool, perform the “Static / Auto Configuration Test” referring to “Tech 2 Operator’s Manual” for configurations registration procedure.

Registration Procedure for the Fuel Injector calibration code

After one or more fuel injector(s) is replaced, register the fuel injector calibration code of each fuel injector manually, by reading the fuel injector calibration code on each fuel injector by using SUZUKI scan tool (Refer to “Tech 2 Operator’s Manual”).

Glow plug removal and installation

Removal

CAUTION:
- **Do not damage heating section of the glow plug.**
- **Do not use glow plug that has been dropped.**
- **When removing glow plug, first loosen it with a tool so that one or more screw threads remain engaged, then loosen and remove by hand.**

1) Disconnect negative (–) cable at battery.
2) Remove injection cover.

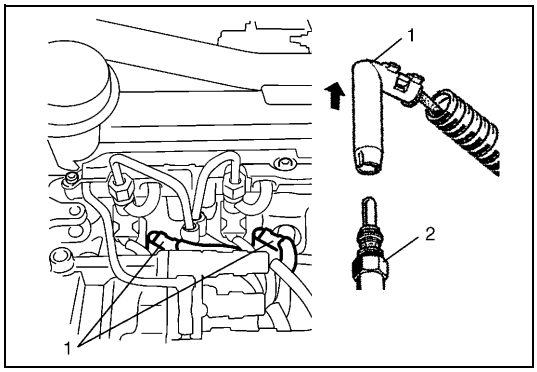

3) Pull off glow plug wires (1).
4) Clean outside of glow plug to avoid any dirt entering cylinder head.
5) Remove glow plugs (2) from cylinder head.

Installation

For installation, reverse removal procedure noting the following.

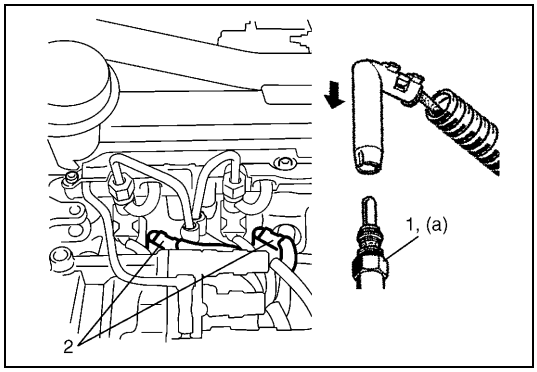

- Tightening glow plug (1) to specified torque.

Tightening torque
Glow plug (a): 15 N·m (1.5 kg-m, 11.0 lb-ft)

- Connect glow plug wires (2) securely.

Glow plug inspection

1) Disconnect negative cable at battery.
2) Remove injection cover.
3) Disconnect glow plug wires.

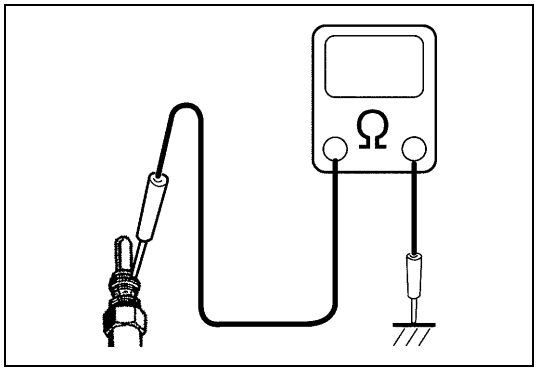

4) Check resistance between glow plug and engine ground. If resistance is out of specification, replace glow plug.

Glow plug resistance
Less than 1 Ω

PPS (accelerator pedal position sensor) removal and installation

Removal

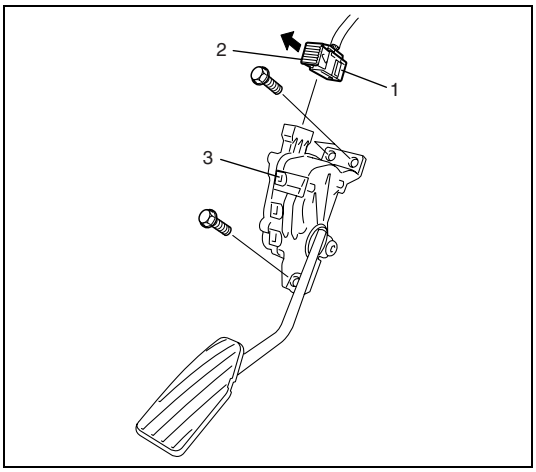

1) Disconnect negative cable at battery.
2) Disconnect connector (1) from pedal position sensor by pulling the lock lever (2).
3) Remove accelerator pedal assembly from accelerator pedal bracket.

Installation

Reverse removal procedure for installation noting the followings.

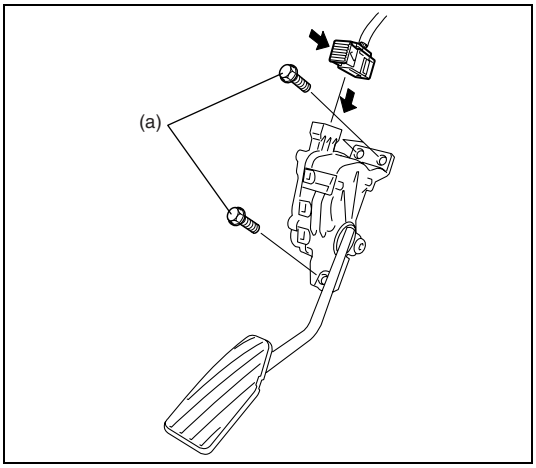

- Connect accelerator pedal position sensor connector securely.
- Tighten accelerator pedal assembly mounting bolts to specified torque.

Tightening torque
Accelerator pedal mounting bolt
(a): 10 N·m (1.0 kg-m, 7.5 lb-ft)

PPS (accelerator pedal position sensor) inspection

1) Disconnect negative cable at battery.
2) Remove accelerator pedal assembly referring to “PPS (Accelerator Pedal Position Sensor) Removal and Installation” in this section.

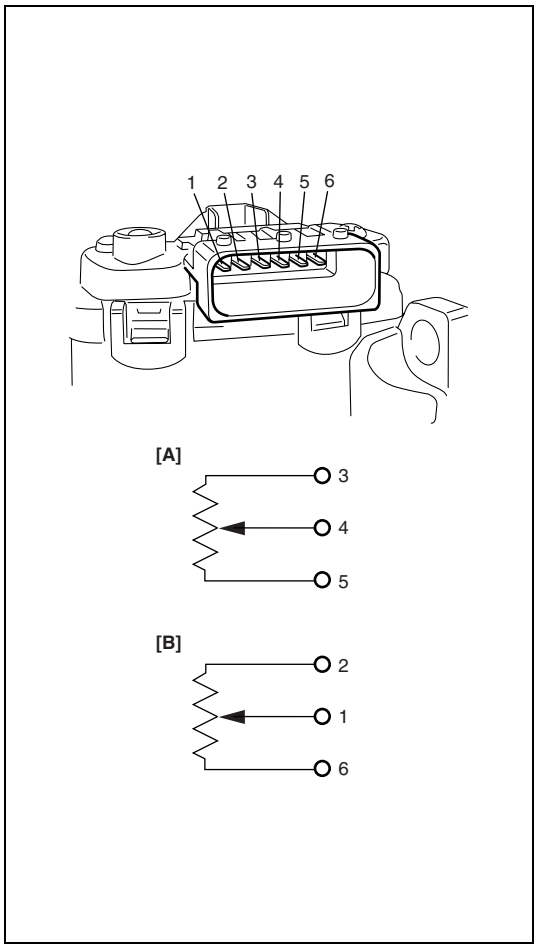

3) Using ohmmeter, check resistance between terminals under each condition given in table below.
   If check result is not satisfactory, replace accelerator pedal assembly.

Pedal position sensor resistance

	TERMINALS	RESISTANCE
PPS 1	Between 3 and 5 terminals	0.67 – 1.69 kΩ
	Between 4 and 5 terminals	1.134 – 1.018 kΩ, varying according to accelerator pedal depressing.
PPS 2	Between 2 and 6 terminals	1.17 – 2.48 kΩ
	Between 1 and 6 terminals	1.100 – 1.796 kΩ, varying according to accelerator pedal depressing.

[A]: PPS 1
[B]: PPS 2
1. Output voltage terminal (PPS 2)
2. Reference voltage terminal (PPS 2)
3. Reference voltage terminal (PPS 1)
4. Output voltage terminal (PPS 1)
5. Ground terminal (PPS 1)
6. Ground terminal (PPS 2)

4) Connect pedal position sensor connector securely.
5) Connect negative cable to battery.

Fuel temperature sensor removal and installation

Removal

1) Check that engine is cold and fuel pressure is not under pressure referring to “Fuel Pressure Relief Confirmation Procedure” in this section.
2) Disconnect negative cable at battery.

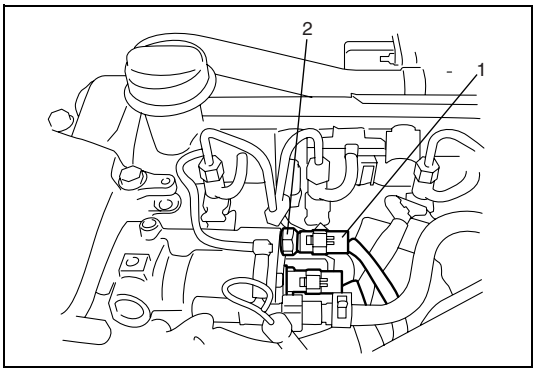

3) Disconnect fuel temperature sensor connector (1).
4) Remove fuel temperature sensor (2) from injection pump.

Installation

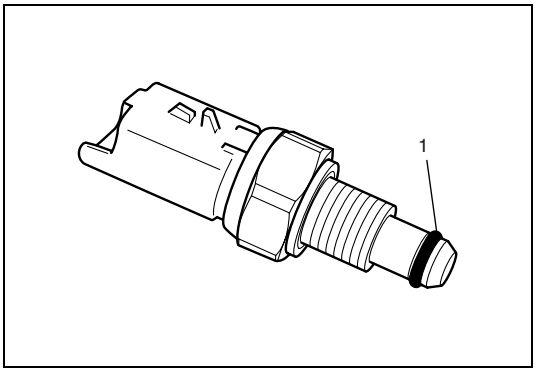

1) Apply oil (spare parts) to O-ring (1) of fuel temperature sensor.

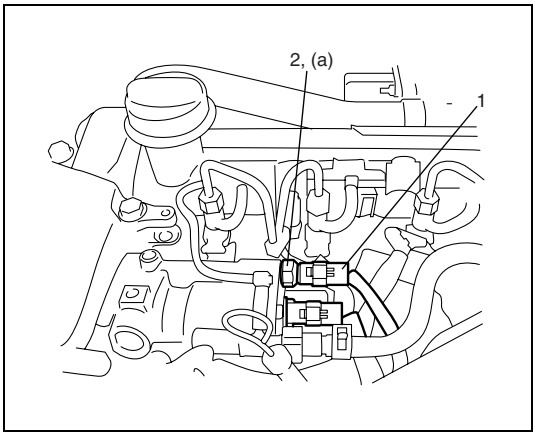

2) Install fuel temperature sensor (2) to injection pump.
   Tighten fuel temperature sensor to specified torque.

CAUTION:

Be careful not to damage O-ring when installing fuel temperature sensor.

Tightening torque
Fuel temperature sensor
(a): 15 N·m (1.5 kg-m, 11.0 lb-ft)

3) Connect fuel temperature sensor connector (1).
4) Connect negative cable to battery.
5) Check fuel leakage referring to “Fuel Leakage Check” in this section.

Fuel temperature sensor inspection

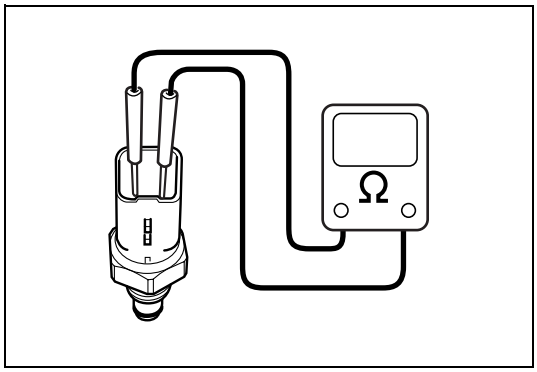

1) Remove fuel temperature sensor referring to “Fuel Temperature Sensor removal and Installation” in this section.
2) Check for resistance between fuel temperature sensor terminals.
   If resistance is not as specified, replace fuel temperature sensor.

Fuel temperature sensor resistance
1.76 – 2.64 kΩ at 25°C (77°F)

Fuel flow actuator removal and installation

Removal

1) Check that engine is cold and fuel pressure is not under pressure referring to “Fuel Pressure Relief Confirmation Procedure” in this section.
2) Disconnect negative cable at battery.

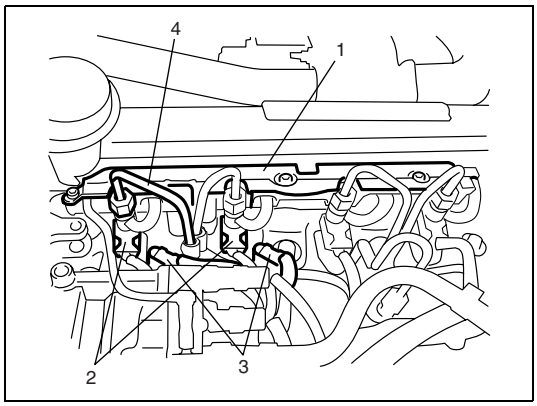

3) Remove injection cover and injector return hose cover (1).
4) Disconnect fuel injector connectors (2) and glow plug connectors (3) of No.3 and No.4 cylinders.
5) Remove high pressure pipe (4) of No.4 cylinder referring to “High Pressure Pipes Removal and Installation” in this section.

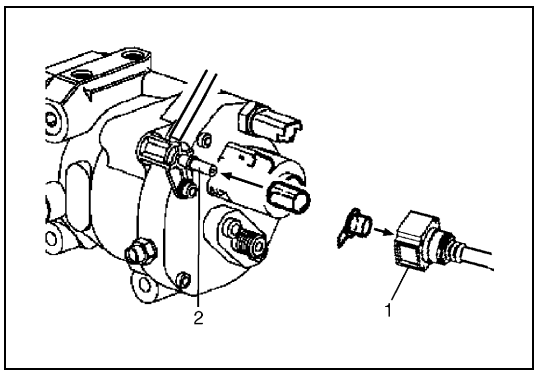

6) Disconnect return hose (1) from venturi (2) on injection pump.
7) Plug disconnected hose and venturi of injection pump with cap available as a spare part to prevent them from entering dust. (Refer to “Precautions in Fuel Delivery System” in this section for parts number and handling.)

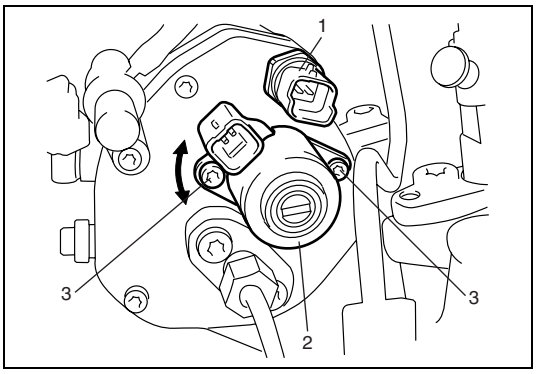

8) Disconnect connectors from fuel temperature sensor (1) and fuel flow actuator (2).
9) Remove fuel flow actuator screws (3).
10) Pull out fuel flow actuator by hand using small successive turns.

CAUTION:
Do not use fuel flow actuator connector as a lever arm when turning fuel flow actuator.

Installation

For installation, reverse removal procedure noting the following.

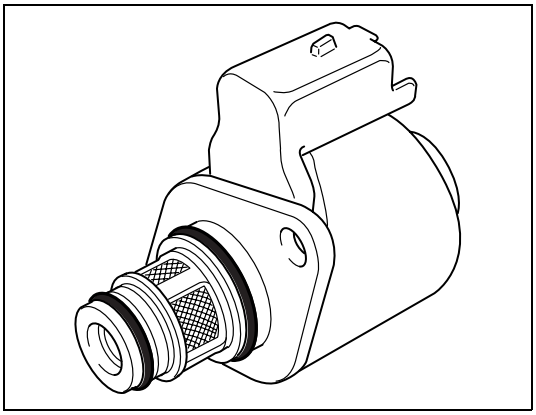

- Do not apply to O-rings of fuel flow actuator with grease or used diesel oil. Apply oil (spare parts) to O-ring of fuel flow actuator.

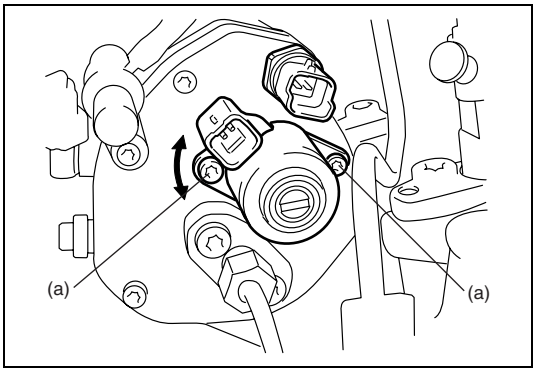

- Tighten fuel flow actuator bolts to specified torque.

Tightening torque
Fuel flow actuator bolt
(a): 5.5 N·m (0.55 kg-m, 4.0 lb-ft)

- Use new high pressure pipe of No.4 cylinder referring to “High Pressure Pipes Removal and Installation” in this section.
- Check fuel leakage referring to “Fuel Leakage Check” in this section.

Fuel flow actuator inspection

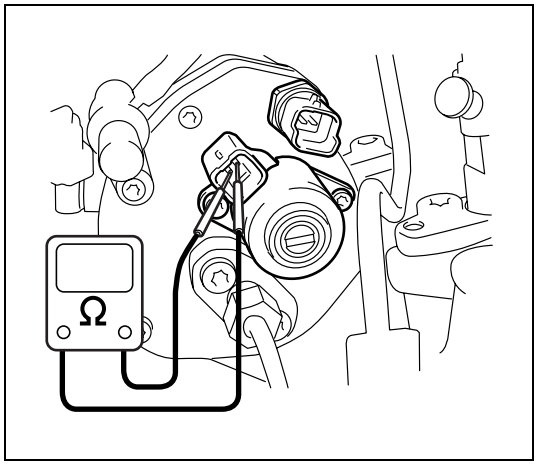

Check resistance between terminals of fuel flow actuator.
If resistance is out of specification, replace fuel flow actuator referring to “Fuel Flow Actuator Removal and Installation” in this section.

Fuel flow actuator resistance
4.8 – 5.8 Ω at 20°C, 68°F

Engine coolant temperature sensor (ECT sensor) removal and installation

Removal

1) Disconnect negative cable at battery.
2) Drain cooling system.

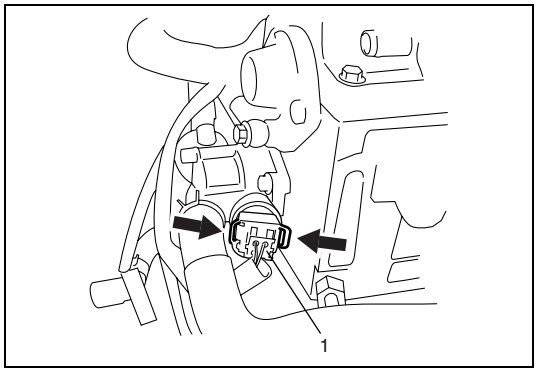

3) Disconnect ECT sensor connector (1) with unlocked connector lock.

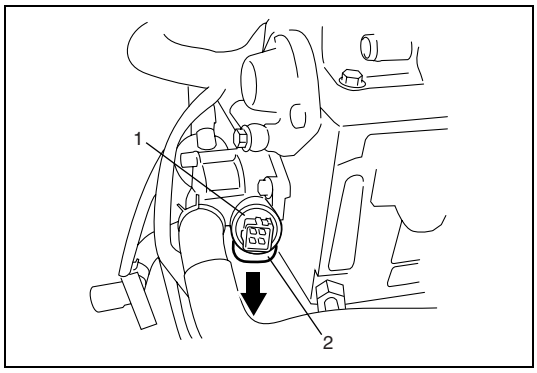

4) Remove ECT sensor (1) from thermostat assembly by removing clip (2).

Installation

Reverse removal procedure for installation noting the following.

- Check ECT sensor O-ring for damage.
  If malfunction is found, replace ECT sensor.
- Refill cooling system referring to “Cooling System Refill” in Section 6B2.
- Check cooling system leakage referring to “Cooling System Service” in Section 6B2.

Engine coolant temperature sensor (ECT sensor) inspection

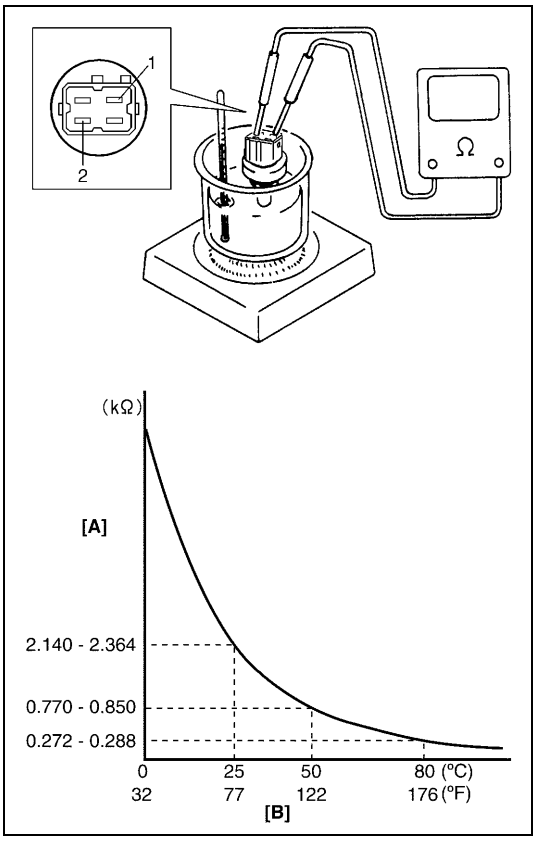

1) Remove ECT sensor referring to “Engine Coolant Temperature Sensor (ECT Sensor)” in this section.
2) Immerse temperature sensing part of ECT sensor in water and measure resistance between sensor terminal (1) and (2) while heating water gradually.
   If measured resistance doesn’t shown such characteristic as shown, replace ECT sensor.

ECT sensor resistance

Water temperature °C (°F)	Resistance (kΩ)
25 (77)	2.140 – 2.364
50 (122)	0.770 – 0.850
80 (176)	0.272 – 0.288

[A]: Resistance
[B]: Temperature

Camshaft position sensor (CMP sensor) removal and installation

Removal

1) Disconnect negative cable at battery.
2) Disconnect CMP sensor connector (2).
3) Remove CMP sensor (1) from generator upper bracket support.

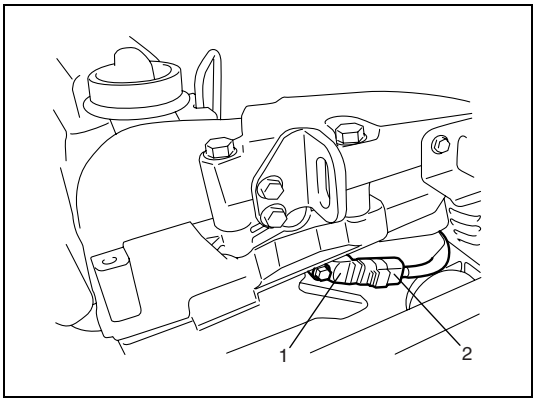

Installation

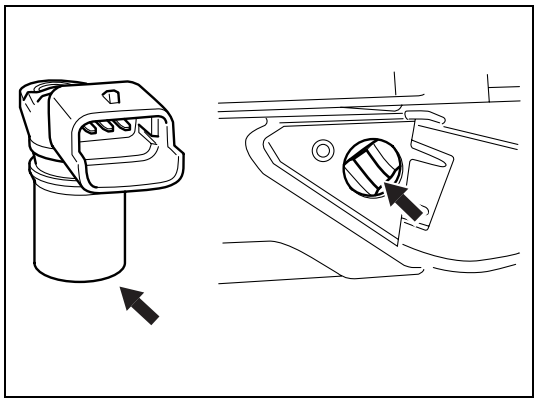

Reverse removal procedure for installation.

- Clean CMP sensor and protrusion of injection pump pulley before installation.

Crankshaft position (CKP) sensor (engine speed sensor) removal and installation

Removal

1) Disconnect negative cable at battery.
2) Detach fuel filter and loosen CKP sensor left side bolt (1).
3) Hoist vehicle.
4) Remove CKP sensor (2) from transmission case by removing CKP sensor bolts.
5) Disconnect CKP sensor connector.

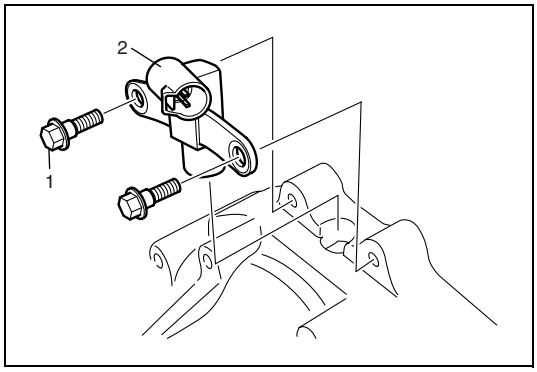

Installation

Reverse removal procedure for installation noting the following.

- Clean CKP sensor and sensor rotor teeth before installation.
- Tighten CKP sensor bolts to specified torque.

Tightening torque
CKP sensor bolt (a): 8 N·m (0.8 kg-m, 6.0 lb-ft)

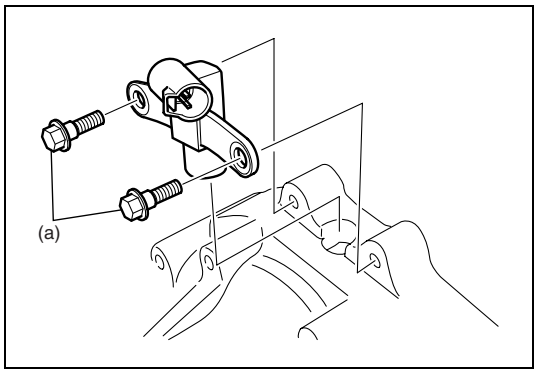

Crankshaft position (CKP) sensor (engine speed sensor) inspection

1) Remove CKP sensor referring to “Crankshaft Position (CKP) Sensor (Engine Speed Sensor) Inspection” in this section.

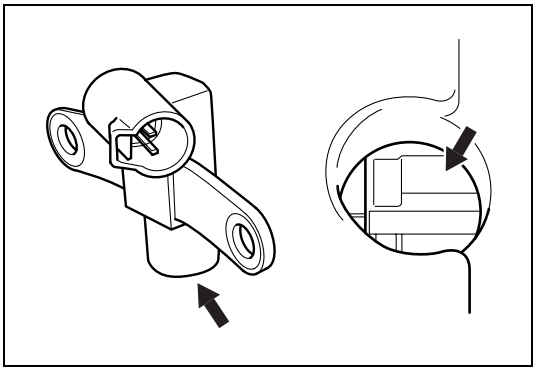

2) Check that CKP sensor (1) and sensor rotor tooth (2) are free from any metal particles and damage.

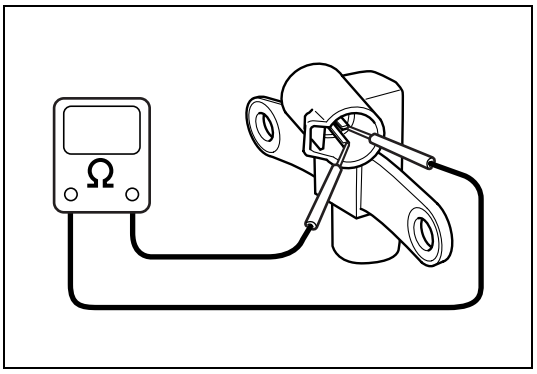

3) Check that resistance between terminals of CKP sensor is within specification.
   If resistance is not as specified, replace CKP sensor.

CKP sensor resistance
608 – 912 Ω at 20°C, 68°F

External air temperature sensor removal and installation

Removal

1) Disconnect negative cable at battery.

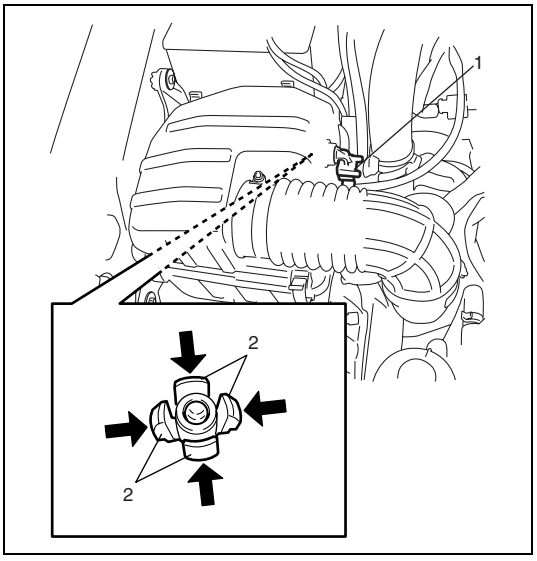

2) Disconnect external air temperature sensor connector (1).
3) Open air cleaner case.
4) Pull out external air temperature sensor from air cleaner case with pushing lock (2) of sensor.

Installation

1) Clean mating surfaces of external air temperature sensor and air cleaner case.
2) Install external air temperature sensor to air cleaner case securely.
3) Install air cleaner case.
4) Connect external air temperature sensor connector securely.
5) Connect negative cable to battery.

External air temperature sensor inspection

1) Remove external air temperature sensor from air cleaner case referring to “External Air Temperature Sensor Removal and Installation” in this section.

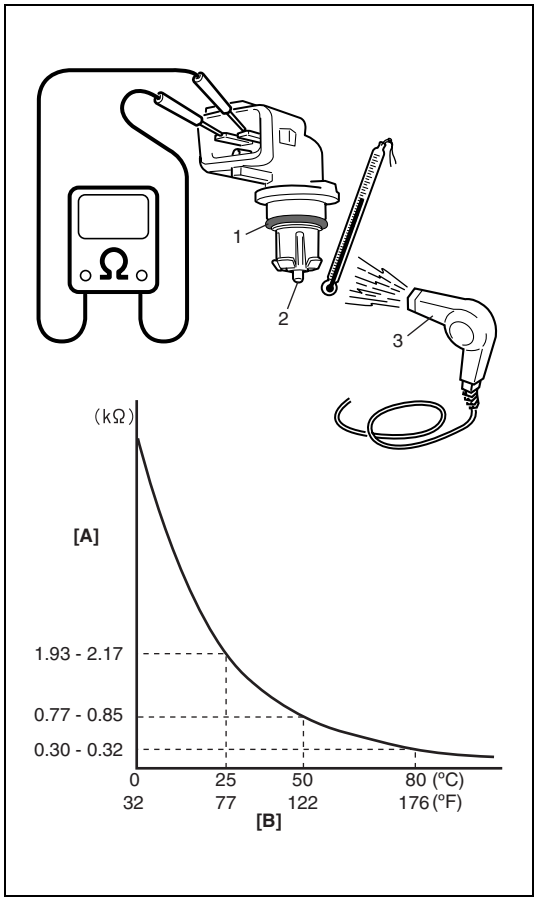

2) Check external air temperature sensor O-ring (1) for damage.
   If malfunction is found, replace external air temperature sensor.
3) Blow hot air to temperature sensing part (2) of external air temperature sensor using hot air drier (3) and measure resistance between sensor terminals while heating air gradually.
   If measured resistance does not show such characteristic as shown, replace external air temperature sensor.

CAUTION:

Do not heat up external air temperature sensor more than 100°C (212°F). Otherwise, external air temperature sensor is damaged.

External air temperature sensor resistance

Temperature °C (°F)	Resistance (kΩ)
25 (77)	1.93 – 2.17
50 (122)	0.77 – 0.85
80 (176)	0.30 – 0.32

[A]: Resistance
[B]: Temperature

Intake air temperature (IAT) sensor removal and installation

Removal

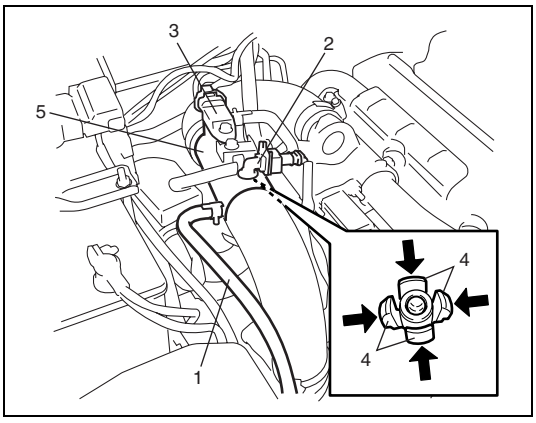

1) Disconnect negative cable at battery.
2) Disconnect west gate actuator hose (1), IAT sensor (2) and boost pressure sensor (3) connectors.
3) Remove turbocharger outlet air pipe (5).
4) Pull out IAT sensor from turbocharger outlet air pipe with pushing lock (4) of IAT sensor.

Installation

1) Clean mating surfaces of IAT sensor and turbocharger outlet air pipe.
2) Install IAT sensor to turbocharger outlet air pipe securely.
3) Install turbocharger outlet air pipe.
4) Connect waste gate actuator hose, IAT sensor and boost pressure sensor connectors securely.
5) Connect negative cable to battery.

Intake air temperature (IAT) sensor inspection

1) Remove IAT sensor from turbocharger outlet air pipe referring to “Intake Air Temperature (IAT) Sensor Removal and Installation” in this section.
   Structure of IAT sensor is the same as that of external air temperature sensor.
2) Check sensor O-ring and sensor resistance using the same procedure as that for external air temperature sensor referring to “External Air Temperature Sensor Inspection” in this section.

Boost pressure sensor removal and installation

Removal

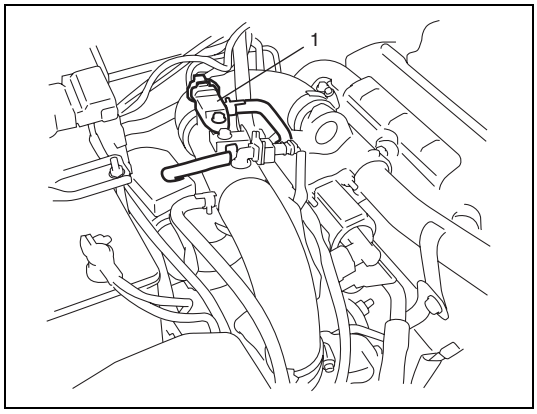

1) Disconnect negative cable at battery.
2) Disconnect connector and hose from boost pressure sensor (1).
3) Remove boost pressure sensor from turbocharger outlet air pipe.

Installation

Reverse removal procedure for installation.

Boost pressure sensor inspection

1) Remove boost pressure sensor from turbocharger outlet air pipe referring to “Boost Pressure Sensor Removal and Installation” in this section.

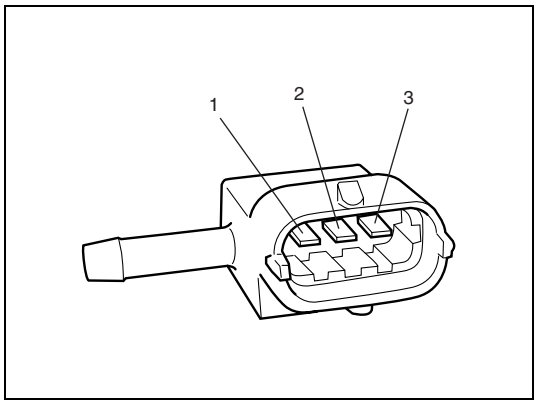

2) Using ohmmeter, check resistance between terminals in table below.
   If check result is not satisfactory, replace boost pressure sensor.

Boost pressure sensor resistance

Terminals	Resistance
Between 1 and 2 terminals	Approx 3.936 kΩ
Between 1 and 3 terminals	Approx 5.39 kΩ
Between 2 and 3 terminals	Approx 5.77 kΩ

Radiator fan control system inspection

WARNING:

Keep hands, tools, and clothing away from engine cooling fan to help prevent personal injury. This fan is electric and can come on whether or not the engine is running. The fan can start automatically in response to the ECT sensor with the ignition switch in the “ON” position.

Check system for operation referring to “Conformity check at Engine Running” in Section 6-2.
If radiator fan fails to operate properly, check relay, radiator fan and electrical circuit.

Main relay and radiator fan relay inspection

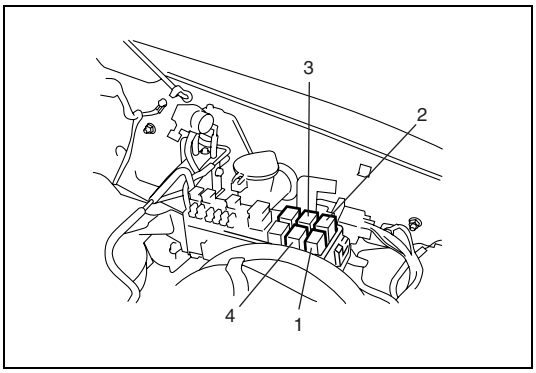

1) Disconnect negative cable at battery.
2) Remove main relay (1), radiator fan relay No.1 (2), No.2 (3) or No.3 (4) from relay connector.

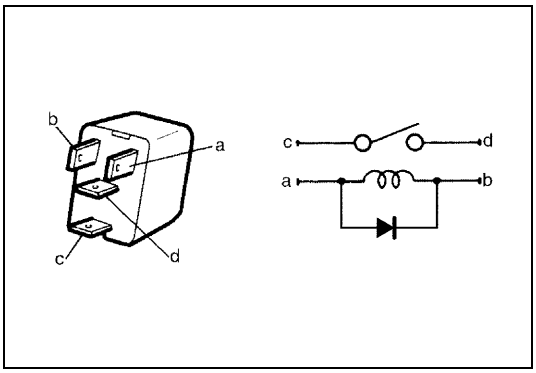

3) Check that there is no continuity between terminal “c” and “d”.
   If there is continuity, replace relay.
4) Connect battery positive (+) terminal to terminal “b” of relay. Connect battery negative (–) terminal “a” of relay.
   Check continuity between terminal “c” and “d”.
   If there is no continuity when relay is connected to the battery, replace relay.

Pre-heating unit removal and installation

Removal

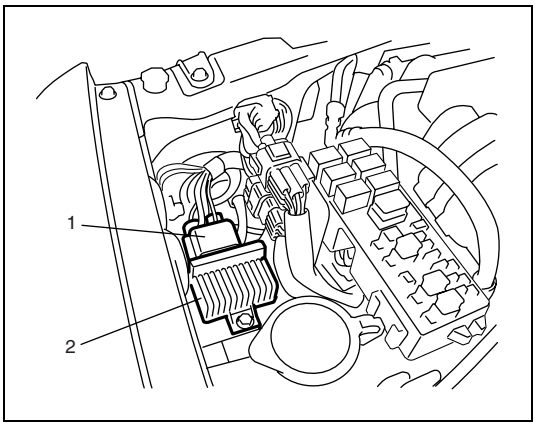

1) Disconnect negative cable at battery.
2) Disconnect pre-heating unit connector (1).
3) Remove pre-heating unit (2) from bracket.

Installation

Reverse removal procedure for installation.

Knock sensor removal and installation

Removal

1) Check that engine is cold and fuel pressure is not under pressure referring to “Fuel Pressure Relief Confirmation Procedure” in this section.
2) Disconnect negative cable at battery.
3) Drain coolant referring to “Coolant Replacement” in Section 6B2.
4) Remove injection pump to common rail high pressure pipe referring to “High Pressure Pipes Removal and Installation” in this section.

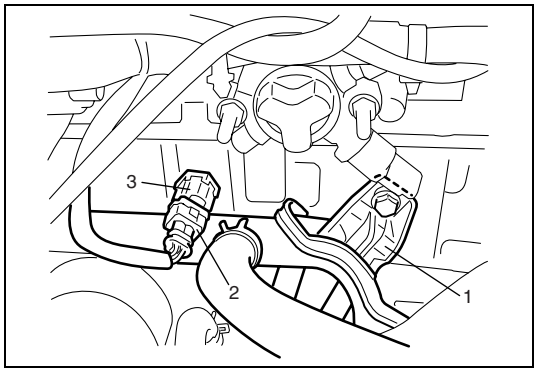

5) Remove water pipe (1).
6) Disconnect knock sensor connector (2).
7) Remove knock sensor (3) from cylinder block.

Installation

Reverse removal procedure noting the following.

- Check O-ring of water pipe for damage and replace if necessary.

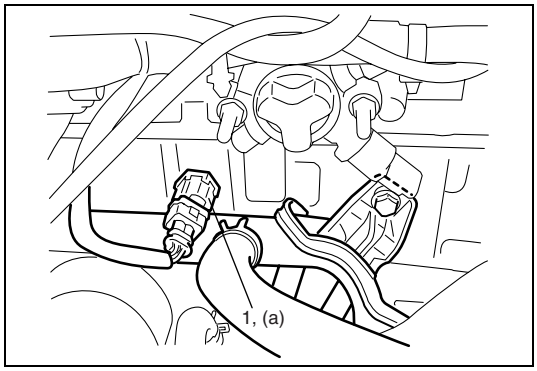

- Tighten knock sensor (1) to specified torque.

Tightening torque
Knock sensor (a): 20 N·m (2.0 kg-m, 14.5 lb-ft)

- Refill coolant referring to “Coolant Replacement” in Section 6B2.
- Install high pressure pipe referring to “High Pressure Pipes Removal and Installation” in this section.

EGR valve removal and installation

For removal and installation procedure of EGR valve, refer to “EGR Valve and Intake Pipe Removal and Installation” in Section 6A2.

EGR valve inspection

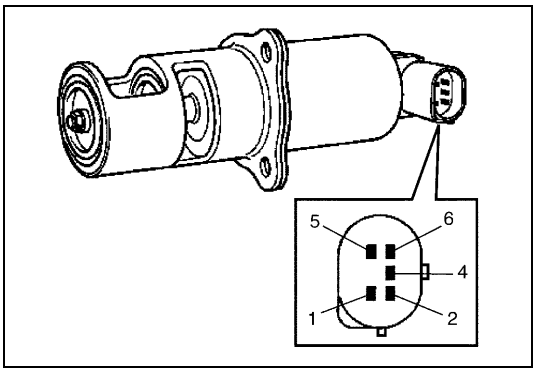

Check resistance between following terminals of EGR valve in each pair.
If resistance is out of specification, replace EGR valve.

EGR valve resistance

Terminal	Resistance
Between 1 and 5 terminals	7.5 – 8.5 Ω at 25°C, 77°F
Between 4 and 6 terminals	0.5 – 1.5 kΩ at 20°C, 68°F
Between 2 and 4 terminals	2.4 – 5.6 kΩ at 20°C, 68°F

Tightening Torque Specification

Fastening part	Tightening torque		
	N•m	kg-m	lb-ft
High pressure pipe union nut	38	3.8	28.0
Common rail nut	28	2.8	20.5
Oil level gauge guide nut	21	2.1	15.5
Fuel injector bracket bolt	28	2.8	20.5
Injection pump bolt	21	2.1	15.5
Venturi bolt	5.5	0.55	4.0
Glow plug	15	1.5	11.0
Accelerator pedal mounting bolt	10	1.0	7.5
Fuel temperature sensor	15	1.5	11.0
Fuel flow actuator bolt	5.5	0.55	4.0
CKP sensor bolt	8	0.8	6.0
Additional heater plug wire nut	3	0.3	2.5
Knock sensor	20	2.0	14.5
EGR valve bolt and nut	12	1.2	9.0
Air inlet metal tube bolt	21	2.1	15.5
EGR unit bolt	21	2.1	15.5

Special Tool

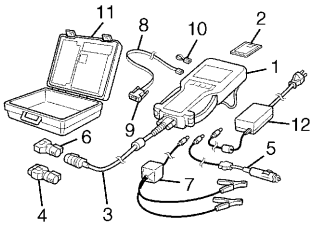	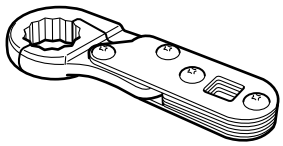
Tech 2 kit (SUZUKI scan tool) (See NOTE)	09911-78110 Crowfoot ratchet ends

NOTE:

This kit includes the following items.
1. Tech 2, 2. PCMCIA card, 3. DLC cable, 4. SAE 16/19 adapter, 5. Cigarette cable, 6. DLC loopback adapter, 7. Battery power cable, 8. RS232 cable, 9. RS232 adapter, 10. RS232 loopback connector, 11. Storage case, 12. Power supply

SECTION 6G2

CRANKING SYSTEM (K9K ENGINE)

WARNING:

For vehicles equipped with a Supplemental Restraint (Air Bag) System:

- **Service on and around the air bag system components or wiring must be performed only by an authorized SUZUKI dealer. Refer to "System Components and Wiring Location View and Connections" under "General Description" in Section 10B in order to confirm whether you are performing service on or near the air bag system components or wiring. Please observe all WARNINGS and "Service Precautions" under "On-Vehicle Service" in Section 10B before performing service on or around the air bag system components or wiring. Failure to follow WARNINGS could result in unintentional activation of the system or could render the system inoperative. Either of these two conditions may result in severe injury.**
- **Technical service work must be started at least 90 seconds after the ignition switch is turned to the "LOCK" position and the negative cable is disconnected from the battery. Otherwise, the system may be activated by reserve energy in the Sensing and Diagnostic Module (SDM).**

CONTENTS

General Description 6G2-2
Cranking System Circuit Diagram 6G2-2
Diagnosis 6G2-2
Cranking System Symptom Diagnosis 6G2-2
Cranking System Test 6G2-4
Pull-in test 6G2-4
Hold-in test 6G2-4
Plunger and pinion return test 6G2-4
No-load performance test 6G2-5
ON-Vehicle Service 6G2-6
Starting Motor Dismounting and Remounting 6G2-6
Dismounting 6G2-6
Remounting 6G2-6
Tightening Torque Specification 6G2-6

General Description

Cranking System Circuit Diagram

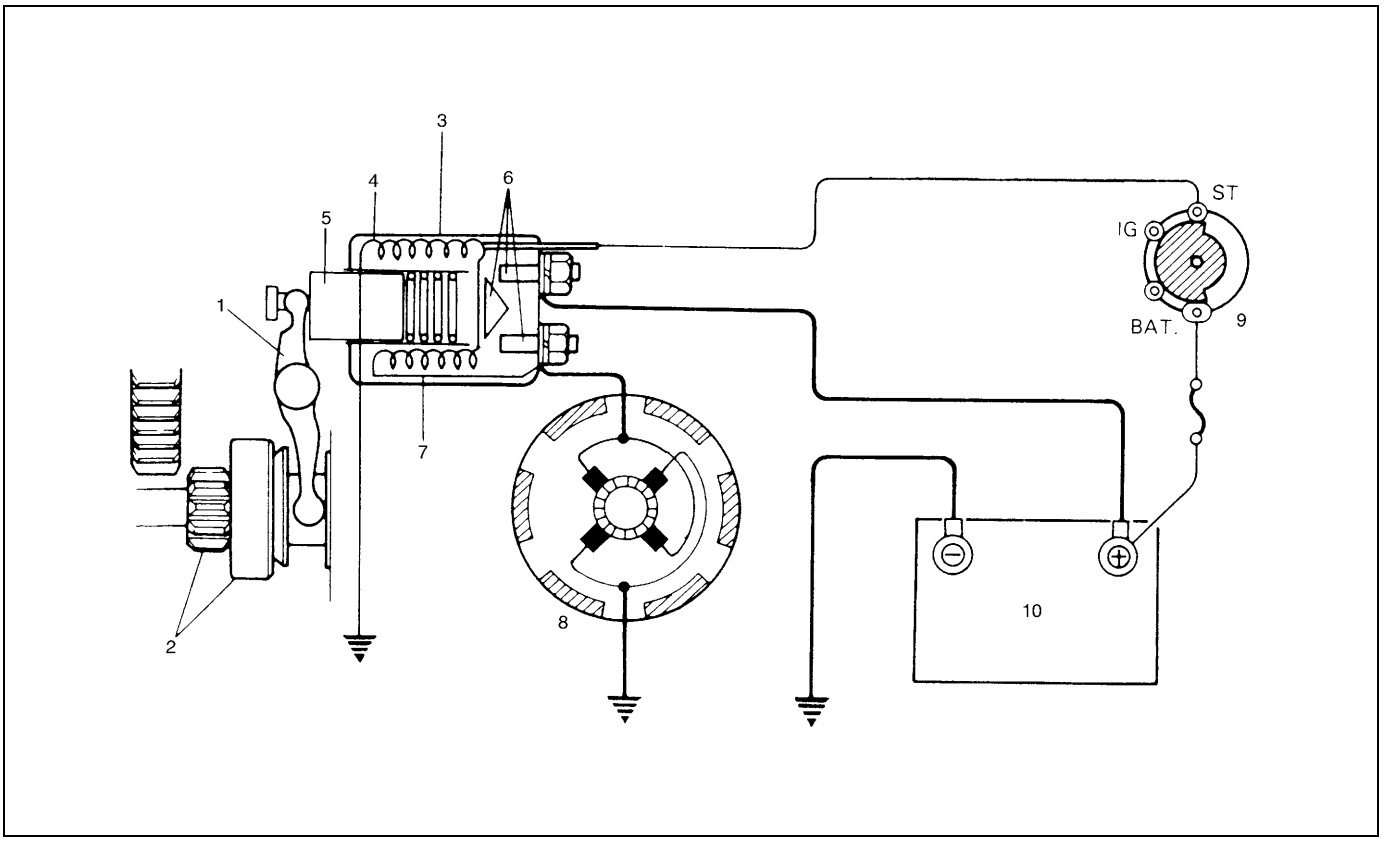

1. Pinion drive lever	5. Plunger	9. Ignition & Starter switch
2. Pinion & Over-running clutch	6. Magnetic switch contacts	10. Battery
3. Magnetic switch	7. Pull-in coil	
4. Hold-in coil	8. Starting motor	

Diagnosis

Cranking System Symptom Diagnosis

Possible symptoms due to starting system trouble would be as follows:

- Starting motor does not run (or runs slowly)
- Starting motor runs but fails to crank engine
- Abnormal noise is heard

Proper diagnosis must be made to determine exactly where the cause of each trouble lies.....in battery, wiring harness, (including starting motor switch), starting motor or engine.
Do not remove motor just because starting motor does not run. Check following items and narrow down scope of possible causes.

1) Condition of trouble
2) Tightness of battery terminals (including ground cable connection on engine side) and starting motor terminals
3) Discharge of battery
4) Mounting of starting motor

Condition	Possible Cause	Correction
Motor not running (No operating sound of magnetic switch)	Battery run down	Recharge battery.
	Battery voltage too low due to battery deterioration	Replace battery.
	Poor contact in battery terminal connection	Retighten or replace.
	Loose grounding cable connection	Retighten.
	Fuse set loose or blown off	Tighten or replace.
	Poor contacting action of ignition switch and magnetic switch	Replace.
	Lead wire coupler loose in place	Retighten.
	Open-circuit between ignition switch and magnetic switch	Repair.
	Open-circuit in pull-in coil	Replace starting motor.
	Brushes are seating poorly or worn down	Replace starting motor.
	Poor sliding of plunger and/or pinion	Replace starting motor.
Motor not running (Operating sound of magnetic switch heard)	Battery run down	Recharge battery.
	Battery voltage too low due to battery deterioration	Replace battery.
	Loose battery cable connections	Retighten.
	Burnt main contact point, or poor contacting action of magnetic switch	Replace starting motor.
	Brushes are seating poorly or worn down	Replace starting motor.
	Weakened brush spring	Replace starting motor.
	Burnt commutator	Replace starting motor.
	Layer short-circuit of armature	Replace starting motor.
	Crankshaft rotation obstructed	Repair.
Starting motor running but too slow (small torque) (If battery and wiring are satisfactory, inspect starting motor)	Insufficient contact of magnetic switch main contacts	Replace starting motor.
	Layer short-circuit of armature	Replace starting motor.
	Disconnected, burnt or worn commutator	Replace starting motor.
	Worn brushes	Replace starting motor.
	Weakened brush springs	Replace starting motor.
	Burnt or abnormally worn end bush	Replace starting motor.
Starting motor running, but not cranking engine	Worn pinion tip	Replace starting motor.
	Poor sliding of over-running clutch	Replace starting motor.
	Over-running clutch slipping	Replace starting motor.
	Worn teeth of ring gear	Replace flywheel.
Noise	Abnormally worn bush	Replace starting motor.
	Worn pinion or worn teeth of ring gear	Replace starting motor or flywheel.
	Poor sliding of pinion (failure in return movement)	Replace starting motor.
	Worn internal or planetary gear teeth	Replace starting motor.
	Lack of oil in each part	Replace starting motor.
Starting motor does not stop running	Fused contact points of magnetic switch	Replace starting motor.
	Short-circuit between turns of magnetic switch coil (layer short-circuit)	Replace starting motor.
	Failure of returning action in ignition switch	Replace.

Cranking System Test

CAUTION:

Each test must be performed within 3 – 5 seconds to avoid coil from burning.

Pull-in test

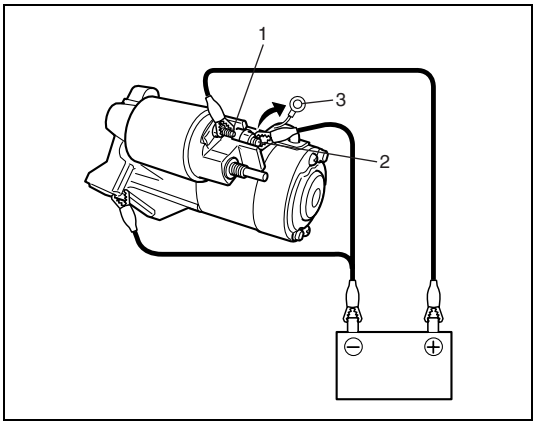

Connect battery to magnetic switch as shown.
Check that plunger and pinion move outward.
If plunger and pinion don't move, replace starting motor.

NOTE:

Before testing, disconnect lead wire (3) from terminal M (2).

1. Terminal "S"

Hold-in test

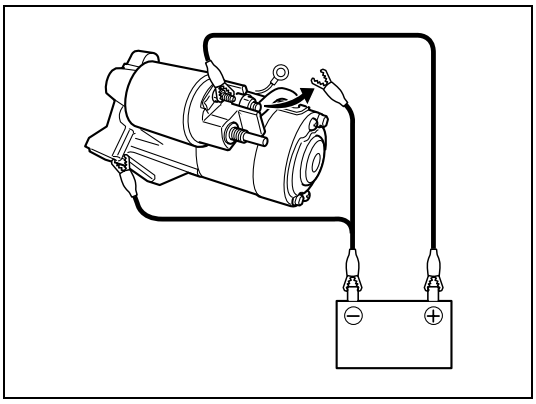

While connected as above with plunger out, disconnect negative lead from terminal "M".
Check that plunger and pinion remain out.
If plunger and pinion return inward, replace starting motor.

Plunger and pinion return test

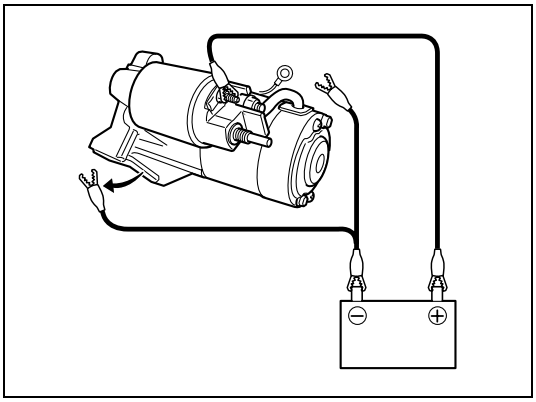

Disconnect negative lead from starting motor body.
Check that plunger and pinion return inward.
If plunger and pinion don't return, replace starting motor.

No-load performance test

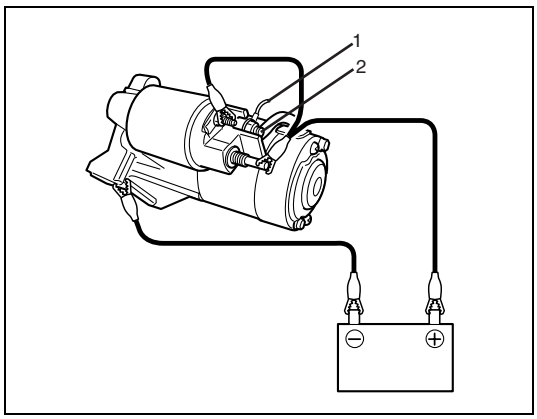

Connect lead wire (1) to terminal M (2).
Connect battery to starting motor as shown.
Check that starting motor rotates smoothly and steadily with pinion moving out.
If check result is not satisfactory, replace starting motor.

ON-Vehicle Service

Starting Motor Dismounting and Remounting

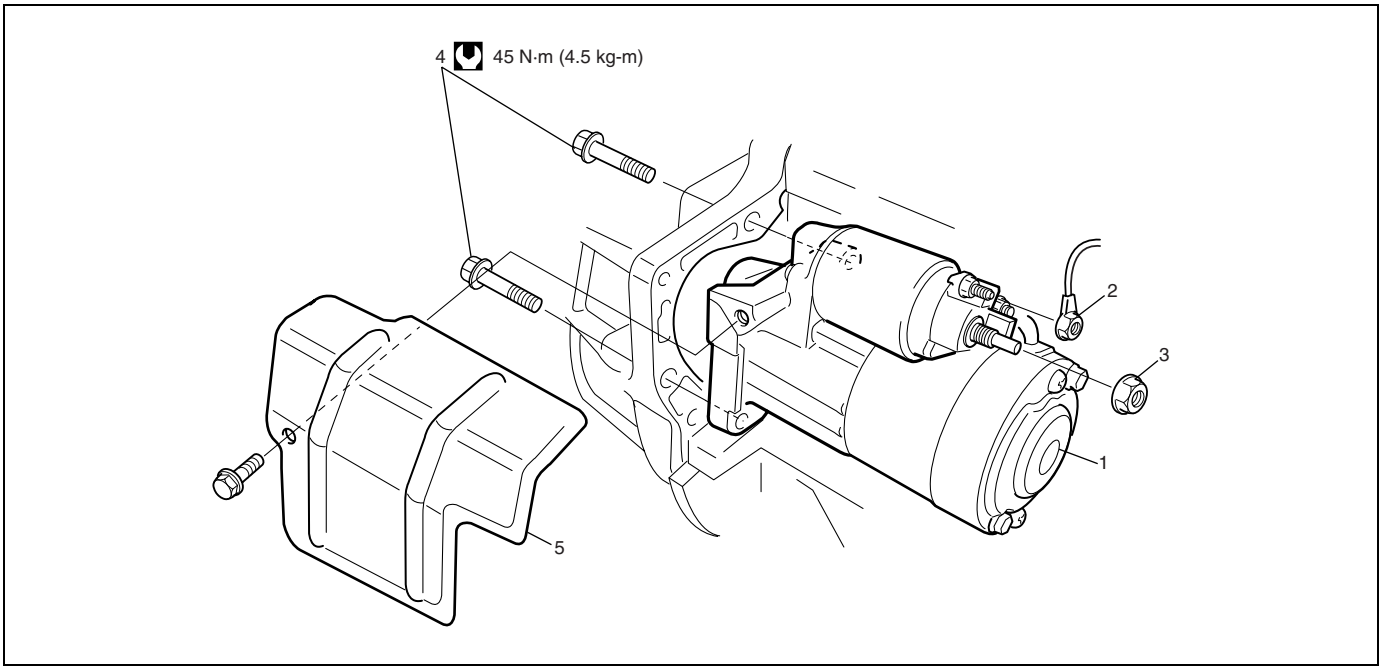

1. Starting motor	3. Battery cable nut	5. Starting motor heat protector
2. Magnetic switch lead wire nut	4. Starting motor mount bolt	Tightening torque

Dismounting

1) Disconnect negative cable at battery.
2) Remove exhaust No.1 pipe refer to “Exhaust No.1 Pipe Removal and Installation” in Section 6K2.
3) Remove starting motor heat protector.
4) Disconnect magnetic switch lead wire and battery cable from starting motor terminals.
5) Remove starting motor mount bolt
6) Remove starting motor.

Remounting

Reverse the dismounting procedure noting the following.

- Tighten starting motor mount bolts to specified torque.

Tightening torque
Starting motor mount bolt: 45 N·m (4.5 kg-m, 33.0 lb-ft)

Tightening Torque Specification

Fastening part	Tightening torque		
	N•m	kg-m	lb-ft
Starting motor mount bolt	45	4.5	33.0

SECTION 6H2

CHARGING SYSTEM (K9K ENGINE)

WARNING:

For vehicles equipped with a Supplemental Restraint (Air Bag) System:

- **Service on and around the air bag system components or wiring must be performed only by an authorized SUZUKI dealer. Refer to "System Components and Wiring Location View and Connectors" under "General Description" in Section 10B in order to confirm whether you are performing service on or near the air bag system components or wiring. Please observe all WARNINGS and "Service Precautions" under "On-Vehicle Service" in Section 10B before performing service on or around the air bag system components or wiring. Failure to follow WARNINGS could result in unintentional activation of the system or could render the system inoperative. Either of these two conditions may result in severe injury.**
- **Technical service work must be started at least 90 seconds after the ignition switch is turned to the "LOCK" position and the negative cable is disconnected from the battery. Otherwise, the system may be activated by reserve energy in the Sensing and Diagnostic Module (SDM).**

CONTENTS

General Description 6H2-2
- Battery Description 6H2-2
  - Carrier and hold-down 6H2-2
  - Electrolyte freezing 6H2-2
  - Sulfation 6H2-2
  - Built-in indicator (if equipped) 6H2-2
  - Care of battery 6H2-3
- Generator Description 6H2-4

Diagnosis 6H2-5
- Battery Inspection 6H2-5
  - Visual inspection 6H2-5
- Generator Symptom Diagnosis 6H2-5
  - Charging indicator lamp operation 6H2-5
  - Undercharged battery 6H2-6

On-Vehicle Service 6H2-7
- Jump Starting in Case of Emergency 6H2-7
  - With auxiliary (booster) battery 6H2-7
  - With charging equipment 6H2-7
- Battery Dismounting and Remounting 6H2-8
  - Dismounting 6H2-8
  - Handling 6H2-8
  - Remounting 6H2-8
- Generator Drive Belt Tensioner Components 6H2-9
- Generator Drive Belt Removal and Installation 6H2-10
- Generator Drive Belt Inspection 6H2-10
- Vacuum Pump Inspection 6H2-10
- Generator Dismounting and Remounting 6H2-11

Specification 6H2-12
- Battery 6H2-12
- Generator 6H2-12

Tightening Torque Specification 6H2-12

Special Tools 6H2-12

General Description

Battery Description

The battery has three major functions in the electrical system.

- It is a source of electrical energy for cranking the engine.
- It acts as a voltage stabilizer for the electrical system.
- It can, for a limited time, provide energy when the electrical load exceeds the output of the generator.

Carrier and hold-down

The battery carrier should be in good condition so that it will support the battery securely and keep it level.
Before installing the battery, the battery carrier and hold-down clamp should be clean and free from corrosion and make certain there are no parts in carrier.
To prevent the battery from shaking in its carrier, the hold-down bolts should be tight enough but not over-tightened.

Electrolyte freezing

The freezing point of electrolyte depends on its specific gravity. Since freezing may ruin a battery, it should be protected against freezing by keeping it in a fully charged condition. If a battery is frozen accidentally, it should not be charged until it is warmed.

Sulfation

If the battery is allowed to stand for a long period in discharged condition, the lead sulfate becomes converted into a hard, crystalline substance, which will not easily turn back to the active material again during the subsequent recharging. “Sulfation” means the result as well as the process of that reaction. Such a battery can be revived by very slow charging and may be restored to usable condition but its capacity is lower than before.

Built-in indicator (if equipped)

The battery has a built-in temperature compensated indicator at the top of the battery. This indicator is to be used with the following diagnostic procedure. When checking the indicator, make sure that the battery has a clean top. A light may be needed in some poorly-lit areas.

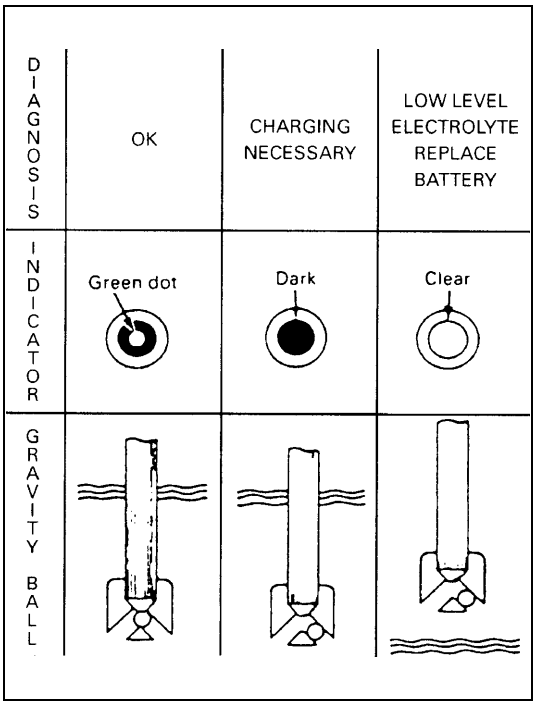

Three types of indication available under normal operation are as follows.

- Green Dot
  Battery is sufficiently charged for testing.
- Dark
  Battery must be charged before testing.
  If there is a cranking complaint, battery should be tested as described in Diagnosis section. Charging and electrical systems should also be checked at this time.
- Clear or Light Yellow
  This means that fluid level is below the bottom of hydrometer. Its possible cause is excessive or prolonged charging, a broken case, excessive tipping or normal battery deterioration. When the battery is found in such condition, it is possible that high charging voltage is caused by the faulty charging system and therefore, charging and electrical systems need to be checked. If there is a trouble in cranking and its cause lies in the battery, it should be replaced.

Care of battery

WARNING:

- **Never expose battery to open flame or electric spark because of battery generate gas which is flammable and explosive.**
- **Do not allow battery fluid to contact eyes, skin, fabrics, or painted surfaces as fluid is a corrosive acid. Flush any contacted area with water immediately and thoroughly.**
- **Batteries should always be kept out of reach of children.**

1) The battery is a very reliable component, but needs periodical attentions.
   - Keep the battery carrier clean
   - Prevent rust formation on the terminal posts
   - Keep the electrolyte up to the upper level uniformly in all cells.
   - When keeping battery on vehicle over a long period of time, follow instructions given below.
     – Weekly, start the engine and run it until it reaches normal operating temperature with engine speed of 2000 to 3000 rpm. Make sure all electric switches are off before storing the vehicle.
     – Recharge the battery twice a month to prevent it from discharging excessively. This is especially important when ambient temperature is low.
     The battery discharges even when it is not used, while vehicles are being stored. Battery electrolyte can freeze and battery case can crack at cold ambient condition if battery is not properly charged.
2) Keep the battery cable connections clean.
   The cable connections, particularly at the positive (+) terminal post, tend to become corroded. The product of corrosion, or rust, on the mating faces of conductors resists the flow of current.
   Clean the terminals and fittings periodically to ensure good metal-to-metal contact, and grease the connections after each cleaning to protect them against rusting.
3) Be always in the know as to the state of charge of the battery. The simplest way to tell the state of charge is to carry out a hydrometer test. The hydrometer is an instrument for measuring the specific gravity (S.G.) of the battery electrolyte. The S.G. of the electrolyte is indicative of the state of charge.

Generator Description

The generator is a small and high performance type with an IC regulator incorporated.
The internal components are connected electrically as shown below figure.

The generator features are as follows:

- Solid state regulator is mounted inside the generator.
- All regulator components are enclosed into a solid mold.
- This unit along with the brush holder assembly is attached to the rear housing.
- The IC regulator uses integrated circuits and controls the voltage produced by the generator, and the voltage setting cannot be adjusted.
- The generator rotor bearings contain enough grease to eliminate the need for periodic lubrication. Two brushes carry current through the two slip rings to the field coil mounted on the rotor, and under normal conditions will provide long period of attention-free service.
- The stator windings are assembled on the inside of a laminated core that forms part of the generator frame.

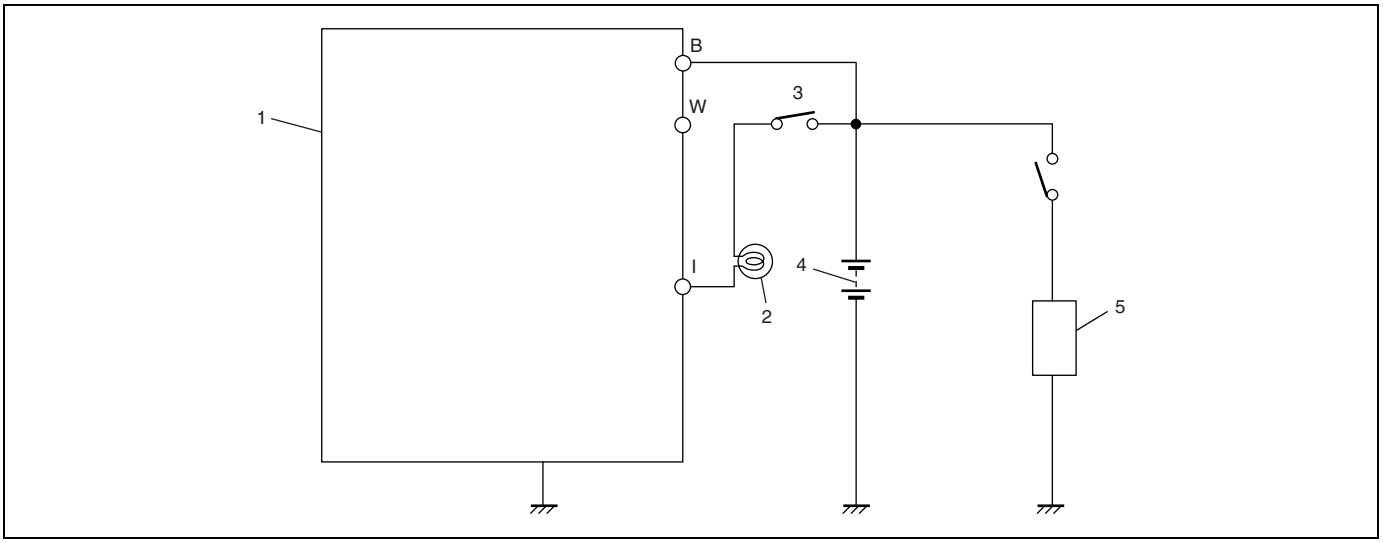

1. Generator with regulator assembly	3. Ignition switch	5. Load
2. Charge indicator light	4. Battery	

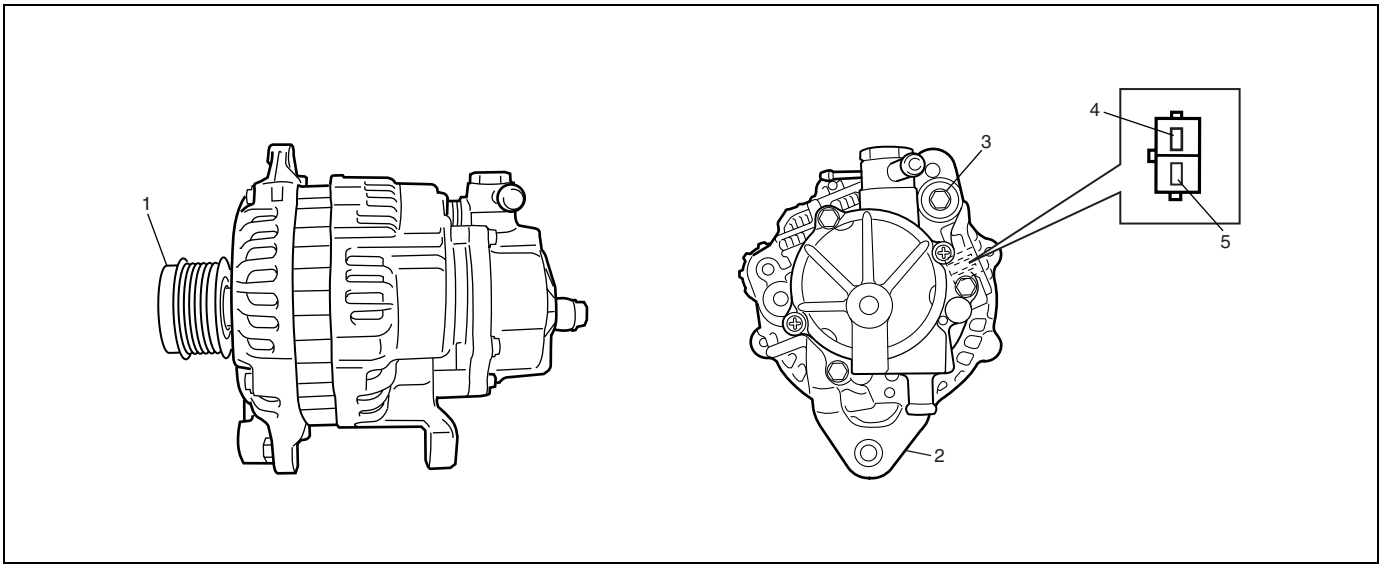

1. Pulley	3. “B” terminal	5. “W” terminal
2. Ground	4. “I” terminal	

Diagnosis

Battery Inspection

Visual inspection

Check for obvious damage, such as cracked or broken case or cover, that could permit loss of electrolyte. If obvious damage is noted, replace battery. Determine cause of damage and correct as needed.

Generator Symptom Diagnosis

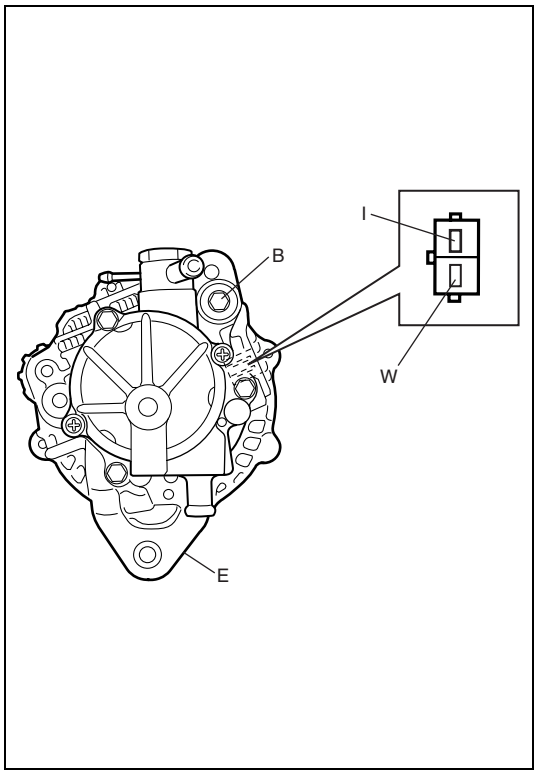

CAUTION:

- **Do not connect any load between I and E.**
- **When connecting charger or booster battery to vehicle battery, refer to "Jump starting in case of emergency" in this section.**

Trouble in charging system will show up as one or more of the following conditions:

1) Faulty indicator lamp operation.
2) An undercharged battery as evidenced by slow cranking or indicator dark.
3) An overcharged battery as evidenced by excessive spewing of electrolyte from vents.

Noise from generator may be caused by loose drive pulley, loose mounting bolts, worn or dirty bearings, defective diode, or defective stator.

B:	Generator output (Battery terminal)
E:	Ground
I:	Lamp terminal

Charging indicator lamp operation

Condition	Possible Cause	Correction
Charge light does not light with ignition ON and engine off	Fuse blown	Check fuse.
	Light burned out	Replace light.
	Wiring connection loose	Tighten loose connection.
	IC regulator or field coil faulty	Replace generator.
Charge light does not go out with engine running (battery requires frequent recharging)	Drive belt loose or worn	Replace drive belt.
	IC regulator or generator faulty	Check charging system.
	Wiring faulty	Repair wiring.
Noise from radio	Condenser faulty	Replace generator.

Undercharged battery

This condition, as evidenced by slow cranking or low specific gravity can be caused by one or more of the following conditions even though indicator lamp may be operating normal.

Following procedure also applies to cars with voltmeter and ammeter.

- Make sure that undercharged condition has not been caused by accessories left on for extended period of time.
- Check drive belt for proper tension.
- If battery defect is suspected, refer to “Battery Description” in this section.
- Inspect wiring for defects. Check all connections for tightness and cleanliness, battery cable connections at battery, starting motor and ignition ground cable.

On-Vehicle Service

Jump Starting in Case of Emergency

With auxiliary (booster) battery

CAUTION:

If vehicle is manual transmission model and has a catalytic converter, do not push or tow it to start. Damage to its emission system and/or to other parts may result.

Both booster and discharged battery should be treated carefully when using jumper cables. Follow procedure outlined below, being careful not to cause sparks.

WARNING:

- **Departure from these conditions or procedure described below could result in:**
  - **Serious personal injury (particularly to eyes) or property damage from such causes as battery explosion, battery acid, or electrical burns.**
  - **Damage to electronic components of either vehicle.**
- **Remove rings, watches, and other jewelry. Wear approved eye protection.**
- **Be careful so that metal tools or jumper cables do not contact positive battery terminal (or metal in contact with it) and any other metal on vehicle, because a short circuit could occur.**

WARNING:

Do not connect negative cable directly to negative terminal of dead battery.

1) Set parking brake and place NEUTRAL on manual transmission. Turn off ignition, turn off lights and all other electrical loads.
2) Check electrolyte level. If it is below low level line, add distilled water.
3) Attach end of one jumper cable to positive terminal of booster battery and the other end of the same cable to positive terminal of discharged battery. (Use 12-volt battery only to jump start engine).
4) Attach one end of the remaining negative cable to negative terminal of booster battery, and the other end to a solid engine ground (such as exhaust manifold) at least 45 cm (18 in.) away from battery of vehicle being started.
5) Start engine of vehicle with booster battery and turn off electrical accessories. Then Start engine of the vehicle with discharged battery.
6) Disconnect jumper cables in the exact reverse order.

With charging equipment

CAUTION:

When jump starting engine with charging equipment, be sure equipment used is 12-volt and negative ground. Do not use 24-volt charging equipment. Using such equipment can cause serious damage to electrical system or electronic parts.

Battery Dismounting and Remounting

Dismounting

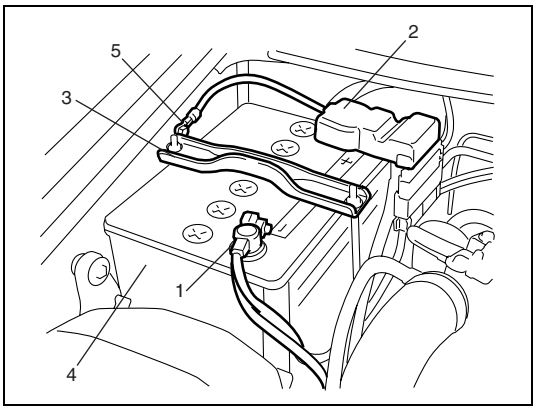

1) Disconnect negative cable (1).
2) Disconnect positive cable (2).
3) Remove retainer (3).
4) Remove battery (4).

5. Body ground bolt

Handling

When handling battery, following safety precautions should be followed:

- Hydrogen gas is produced by battery. A flame or spark near battery may cause the gas to ignite.
- Battery fluid is highly acidic. Avoid spilling on clothing or other fabric. Any spilled electrolyte should be flushed with large quantity of water and cleaned immediately.

Remounting

1) Reverse removal procedure.
2) Torque battery cables to specification.

NOTE:

Check to be sure that ground cable has enough clearance to hood panel by terminal.

Generator Drive Belt Tensioner Components

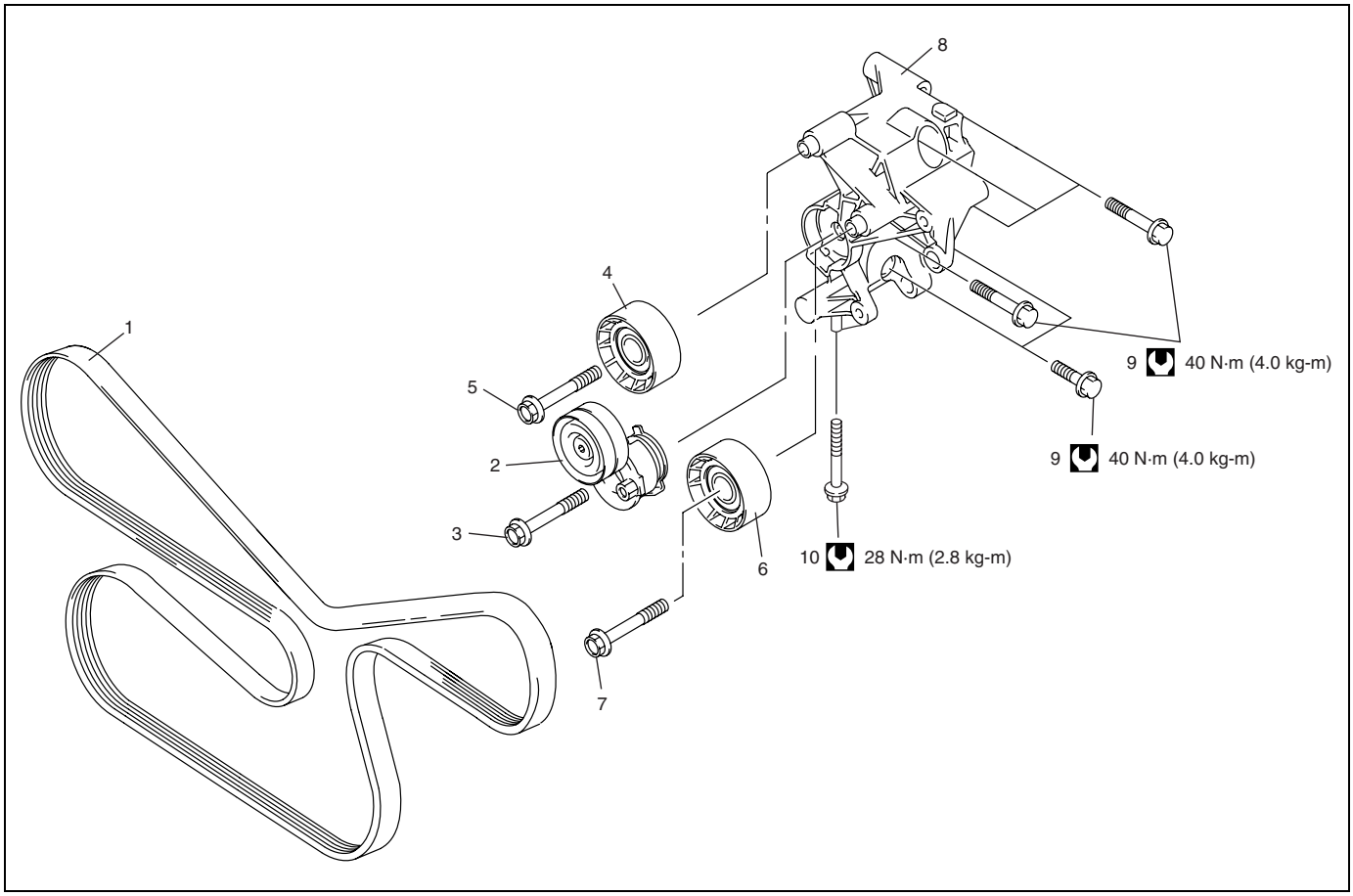

1. Drive belt	5. Idler pulley No.1 bolt	9. Accessary mounting bracket No.1 bolts
2. Auto tensioner	6. Idler pulley No.2	10. Accessary mounting bracket No.2 bolt
3. Auto tensioner bolt	7. Idler pulley No.3 bolt	Tightening torque
4. Idler pulley No.1	8. Accessary mounting bracket	

Generator Drive Belt Removal and Installation

Removal

1) Disconnect negative (-) cable at battery.
2) Remove generator cover.
3) Remove drive belt (2) while turning tensioner (1) counter clockwise until stopping.

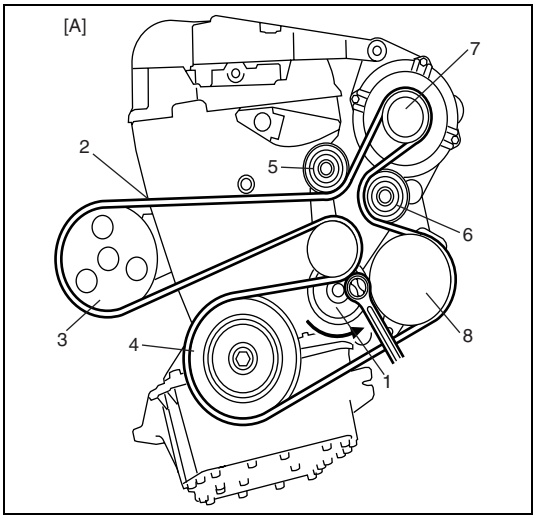

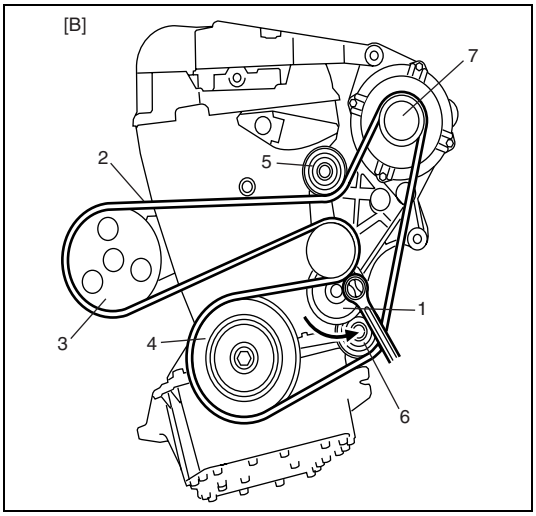

Installation

Reverse removal procedure.

3.	Power steering pump pulley
4.	Crankshaft pulley
5.	Idler pulley No.1
6.	Idler pulley No.2
7.	Generator Pulley
8.	A/C compressor pulley
[A]:	with A/C
[B]:	without A/C

Generator Drive Belt Inspection

- Check drive belt for wear and cracks, and replace as required.

Vacuum Pump Inspection

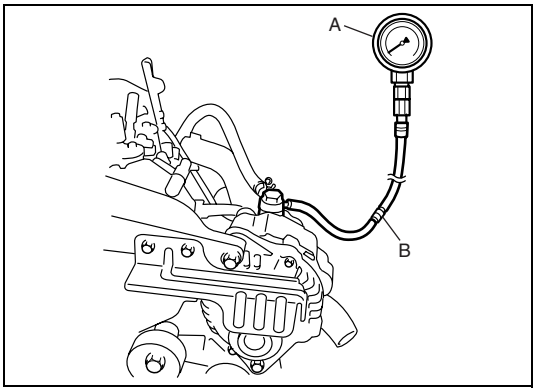

Install a Vacuum pump gauge to the vacuum circuit as shown in the figure and measure vacuum.

–75kPa (–10.9 psi) or more (keep for 20 seconds at engine speed 1,500 rpm first)
–85kPa (–12.3 psi) or more (keep for 20 seconds at engine speed 3,000 rpm first)

Special tool
(A): 09915-67311
(B): 09918-08210

Generator Dismounting and Remounting

1) Disconnect negative cable at battery.
2) Dismount in order as shown in the figure.
3) Reverse dismounting procedure for remounting.

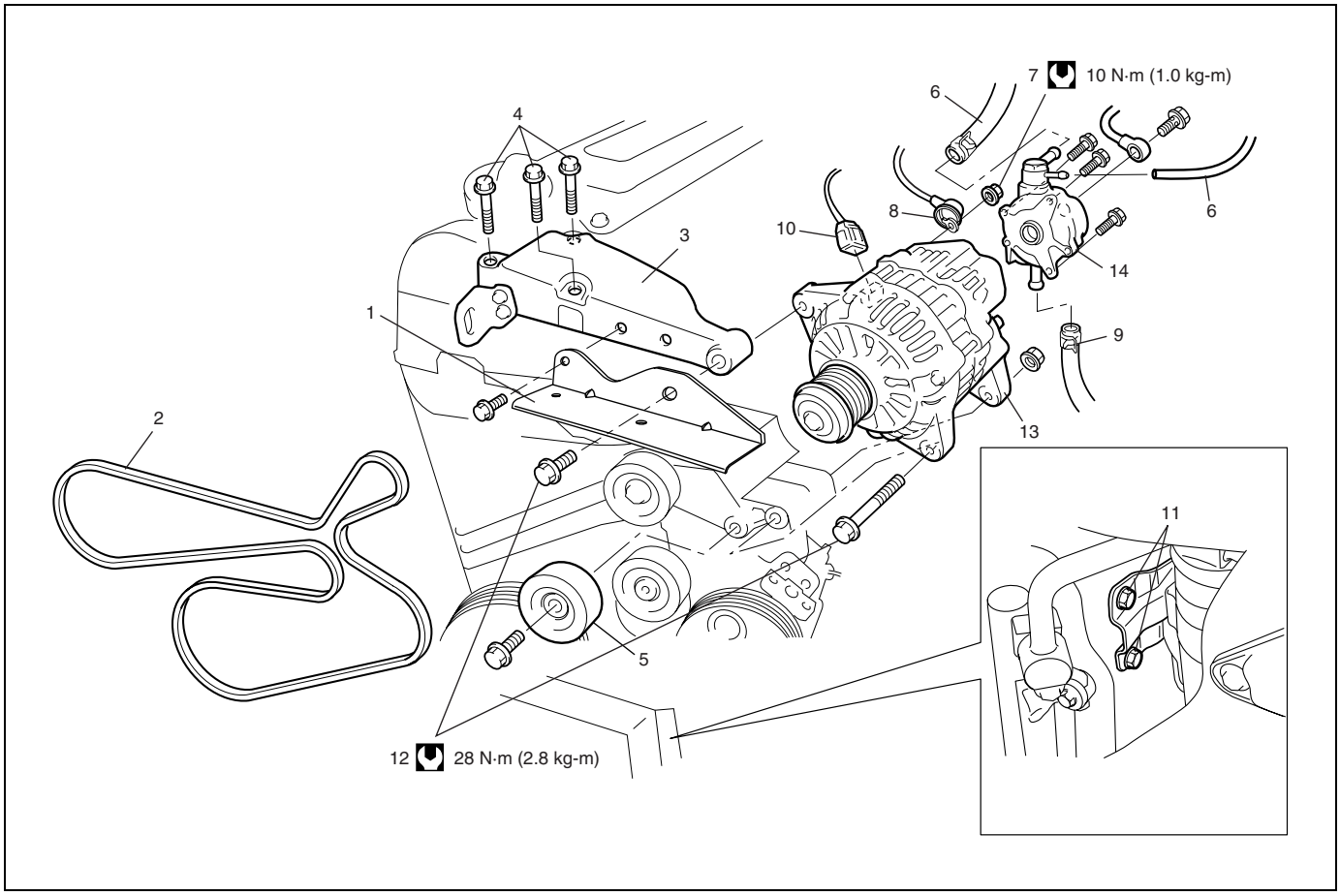

1. Generator cover	6. Vacuum hose	11. A/C receiver/dryer bolts (If Equipped)
2. Drive belt	7. "B" terminal nut	12. Generator bolts
3. Generator upper bracket	8. "B" terminal wire	13. Generator
4. Generator upper bracket bolts	9. Oil hose	14. Vacuum pump
5. Idler pulley No.2	10. Connector	Tightening torque

Specification

Battery

Battery type	75D23L
Nominal output	12 V
Rated capacity	54 Ah/5 h

Generator

Generator Type	100 A type
Rated voltage	12 V
Nominal output	100 A
Polarity	Negative ground
Rotation	Clockwise viewed from pulley side

Tightening Torque Specification

Fastening part	Tightening torque		
	N•m	kg-m	lb-ft
Generator bolts	28	2.8	20.0
“B” terminal bolt	10	1.0	7.0
Accessary mounting bracket No.1 bolts	40	4.0	29.0
Accessary mounting bracket No.2 bolt	28	2.8	20.0

Special Tools

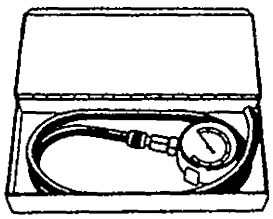	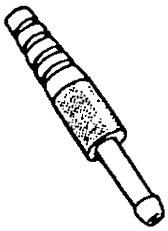
09915-67311 Vacuum gauge	09918-08210 Vacuum hose joint

SECTION 6K2

EXHAUST SYSTEM (K9K ENGINE)

CONTENTS

General Description 6K2-2
Maintenance 6K2-2
On-Vehicle Service 6K2-3
Exhaust System Components 6K2-3
Exhaust Manifold Removal and Installation 6K2-4
Exhaust Manifold Inspection 6K2-4
Exhaust Pipe Removal and Installation 6K2-4
Tightening Torque Specification 6K2-4

General Description

The exhaust system consists of an exhaust manifold, a turbo charger, exhaust pipe, a muffler and seal, gasket and etc.
The oxidation catalytic converter is included in exhaust pipe. It is an emission control device added to the exhaust system to lower the levels of Hydrocarbon (HC) and Carbon Monoxide (CO) pollutants in the exhaust gas.

Maintenance

WARNING:
To avoid the danger of being burned, do not touch the exhaust system when the system is hot. Any service on the exhaust system should be performed when the system is cool.

At every interval of periodic maintenance service, and when vehicle is raised for other service, check exhaust system as follows:

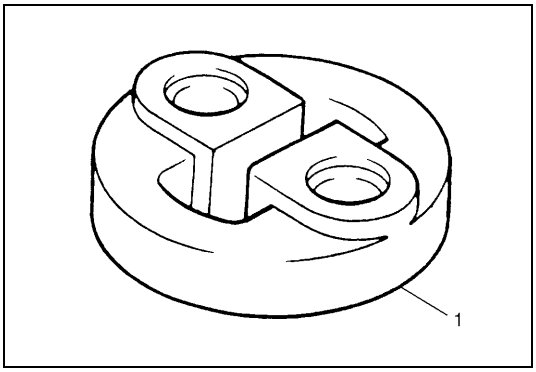

- Check rubber mountings (1) for damage, deterioration, and out of position.
- Check exhaust system for leakage, loose connection, dent and damage.
- If bolts or nuts are loosened, tighten them to specified torque referring to “Exhaust System Components” in this section.
- Check nearby body areas damaged, missing, or mispositioned part, open seam, hole connection or any other defect which could permit exhaust fumes to seep into vehicle.

- Make sure that exhaust system components have enough clearance from underbody to avoid overheating and possible damage to passenger compartment carpet.
- Any defect should be fixed at once.

On-Vehicle Service

Exhaust System Components

WARNING:

To avoid the danger of being burned, do not touch the exhaust system when the system is hot. Any service on the exhaust system should be performed when the system is cool.

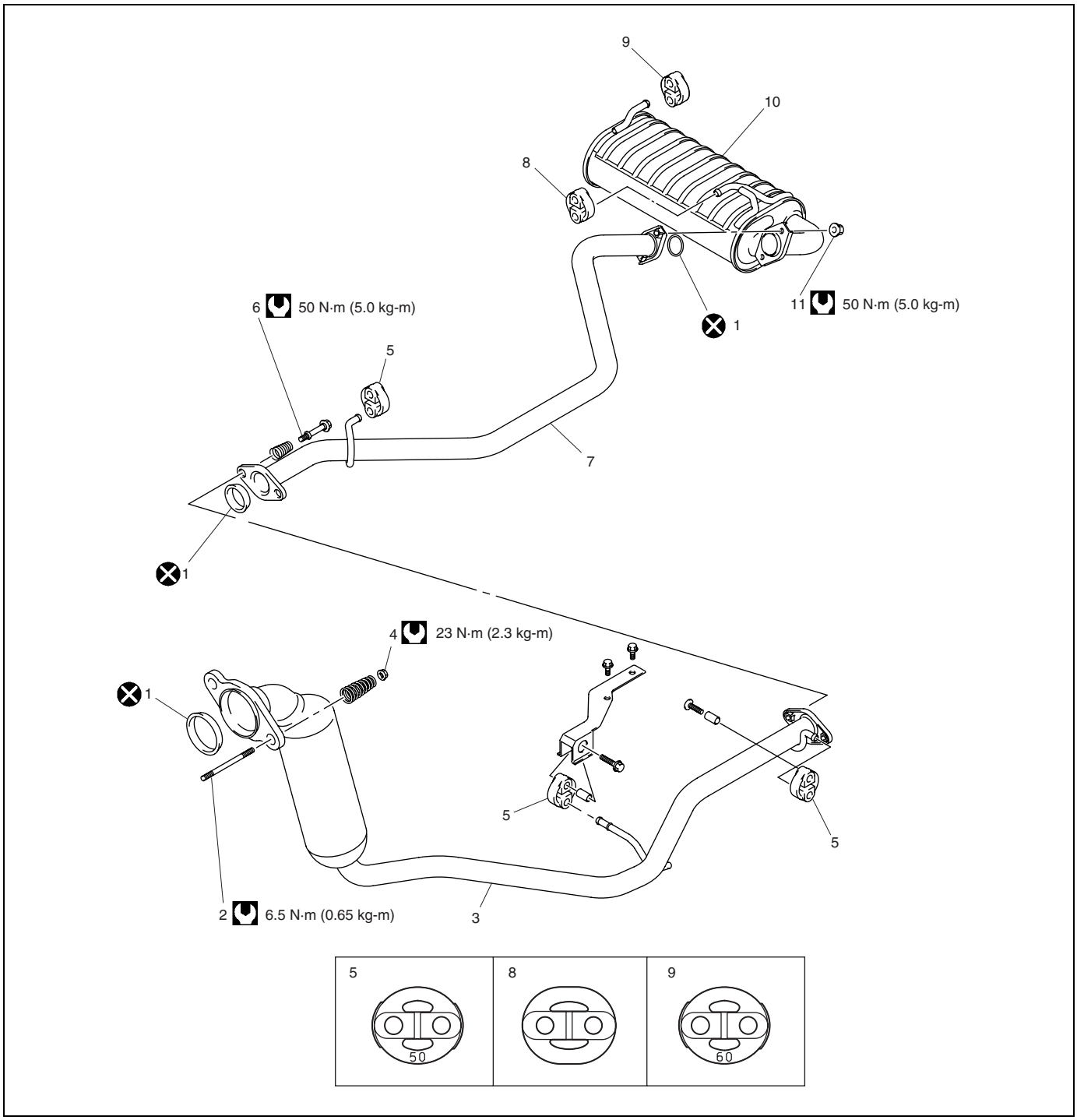

1. Seal ring	5. Mounting No.1	9. Mounting No.3	⊗ Do not reuse.
2. Exhaust pipe stud bolt	6. Center pipe bolt	10. Muffler	
3. Exhaust pipe	7. Center pipe	11. Muffler nut	
4. Exhaust pipe nut	8. Mounting No.2	Tightening torque	

Exhaust Manifold Removal and Installation

Removal and installation

Refer to “Exhaust Manifold Removal and Installation” in Section 6A2.

Exhaust Manifold Inspection

Check gasket and seal for deterioration or damage.
Replace them as necessary.

Exhaust Pipe Removal and Installation

CAUTION:

Exhaust pipe have oxidation catalytic converter in it, it should not be exposed to any impulse. Be careful not to drop it or hit it against something.

Removal and installation

For replacement of exhaust pipe, be sure to hoist vehicle and observe “Warning” under “Maintenance” in this section and the following.

- Tighten bolts and nuts to specified torque when reassembling referring to “Exhaust System Components” in this section.
- After installation, start engine and check each joint of exhaust system for leakage.

Tightening Torque Specification

Fastening part	Tightening torque		
	N•m	kg-m	lb-ft
Exhaust pipe stud bolt	6.5	0.65	4.5
Exhaust pipe nut	23	2.3	17.0
Center pipe bolt	50	5.0	36.5
Muffler nut	50	5.0	36.5

SECTION 7A2

MANUAL TRANSMISSION

WARNING:

For vehicles equipped with a Supplemental Restraint (Air Bag) System:

- **Service on and around the air bag system components or wiring must be performed only by an authorized SUZUKI dealer. Refer to "Air Bag System Components and Wiring Location View" under "General Description" in air bag system section in order to confirm whether you are performing service on or near the air bag system components or wiring. Please observe all WARNINGS and "Service Precautions" under "On-Vehicle Service" in air bag system section before performing service on or around the air bag system components or wiring. Failure to follow WARNINGS could result in unintentional activation of the system or could render the system inoperative. Either of these two conditions may result in severe injury.**
- **Technical service work must be started at least 90 seconds after the ignition switch is turned to the "LOCK" position and the negative cable is disconnected from the battery. Otherwise, the system may be activated by reserve energy in the Sensing and Diagnostic Module (SDM).**

CONTENTS

General Description 7A2-2
- Transmission Components 7A2-2

On-Vehicle Service 7A2-3
- Manual Transmission Oil Change 7A2-3
- Extension Case Oil Seal Replacement 7A2-4
- Gear Shift Control Lever Assembly Components 7A2-5
- Gear Shift Control Lever Assembly Removal and Installation 7A2-6
- Gear Shift Control Lever Assembly Disassembly and Reassembly 7A2-7
- Gear Shift Control Lever Assembly Inspection 7A2-7

Unit Repair Overhaul 7A2-8
- Manual Transmission Unit Components 7A2-8
- Transmission Unit Dismounting and Remounting 7A2-9
- Gear Shift Lever Case Assembly Components 7A2-11
- Gear Shift Lever Case Assembly Removal and Installation 7A2-12
- Gear Shift Lever Case Assembly Disassembly and Reassembly 7A2-13
- Back Up Lamp Switch Removal and Installation 7A2-14
- Back Up Lamp Switch Inspection 7A2-14
- Manual Transmission Assembly Components 7A2-15
- Manual Transmission Assembly Disassembly and Reassembly 7A2-16
- Locating Spring Inspection 7A2-21
- Front Case Disassembly and Assembly 7A2-22
- Gear Shift Shaft and Fork Components 7A2-23
- Gear Shift Fork Inspection 7A2-23
- Input Shaft, Countershaft and Output Shaft Components 7A2-24
- Input Shaft Assembly Disassembly and Reassembly 7A2-25
- Input Shaft Assembly Inspection 7A2-28
- Countershaft Assembly Disassembly and Reassembly 7A2-28
- Countershaft Assembly Inspection 7A2-31
- Output Shaft Assembly Disassembly and Reassembly 7A2-31
- Output Shaft Assembly Inspection 7A2-32

Tightening Torque Specification 7A2-32

Required Service Material 7A2-33

Special Tool 7A2-34

General Description

Transmission Components

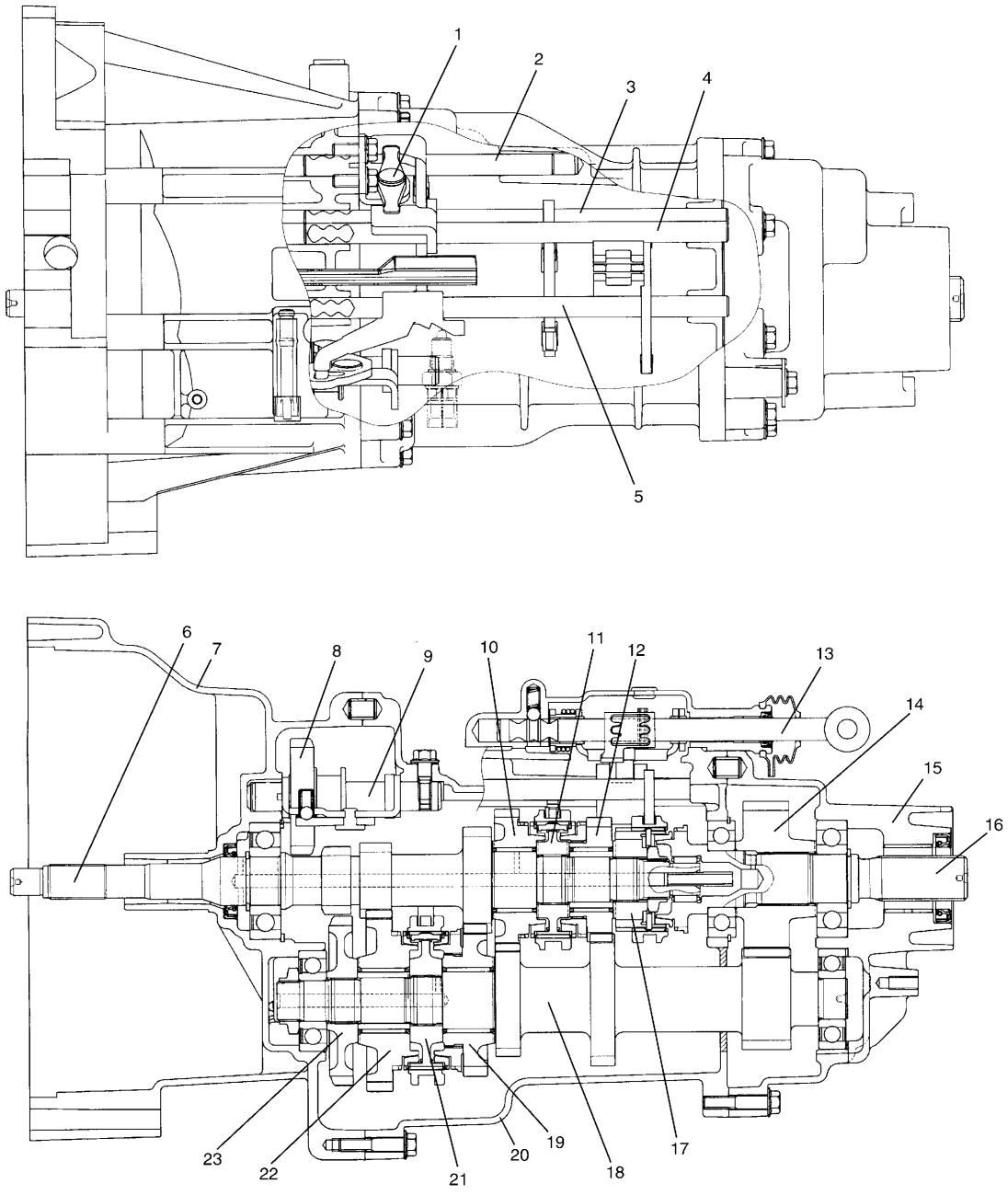

1. Low gear shift inverse lever	9. Reverse shaft	17. 5th speed synchronizer hub
2. Low speed gear shift fork	10. 4th gear	18. Countershaft
3. High speed gear shift fork	11. High speed synchronizer hub	19. 2nd gear
4. Low speed gear shift shaft	12. 3rd gear	20. Transmission rear case
5. 5th & reverse gear shift fork	13. Gear shift shaft	21. Low speed synchronizer hub
6. Input shaft	14. Output shaft gear	22. 1st gear
7. Transmission front case	15. Extension case	23. Reverse gear
8. Reverse idler gear	16. Output shaft	

On-Vehicle Service

CAUTION:
Do not reuse O-ring, circlip, spring pin, E-ring, oil seal, gasket, self locking nut and specified parts. Reuse of it can result in trouble.

Manual Transmission Oil Change

1) Before changing or inspecting oil, be sure to stop engine and lift vehicle horizontally.
2) With vehicle lifted up, check oil level and leakage.
   If leakage exists, correct it.
3) Drain old oil and fill new specified oil by specified amount (up to level hole).

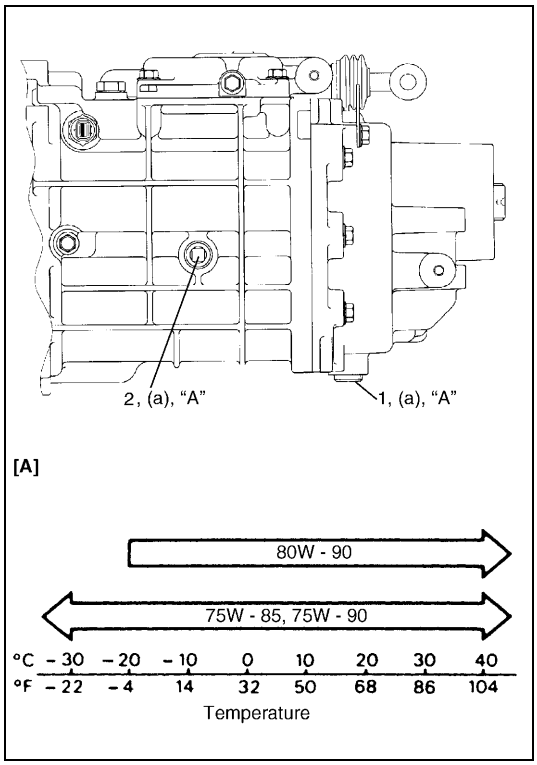

4) Apply sealant to thread of drain plug (1) and level / filler plug (2) and torque them as specified below.

"A": Sealant 99000-31260

Tightening torque
Transmission oil level / filler and drain plugs
(a): 23 N·m (2.3 kg-m, 17.0 lb-ft)

NOTE:

- **It is highly recommended to use API GL-4 75W-90 gear oil.**
- **Whenever vehicle is hoisted for any other service work than oil change, also be sure to check for oil leakage.**

Transmission oil
: API GL-4
For SAE classification, refer to viscosity chart [A] in the figure.

Transmission oil capacity
: 1.9 liters (4.1/3.3 US/Imp. pt)

Extension Case Oil Seal Replacement

Replacement

1) Drain transmission oil referring to “Manual Transmission Oil Change” in this section.
2) Remove gear shift control lever referring to “Gear Shift Control Lever Assembly Removal and Installation” in this section.
3) Remove propeller shaft No.1 referring to “Propeller Shafts” in Section 4B.
4) Support transmission with transmission jack.

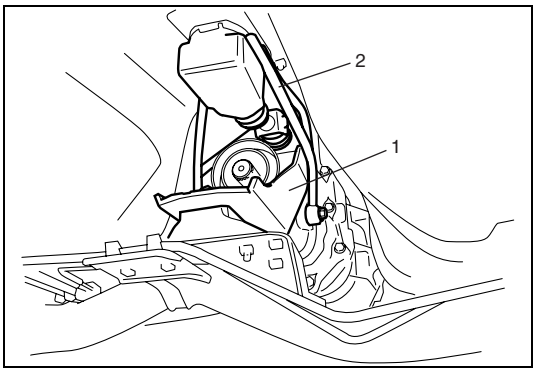

5) Remove rear mounting bracket (1).
6) Remove gear shift control arm (2).

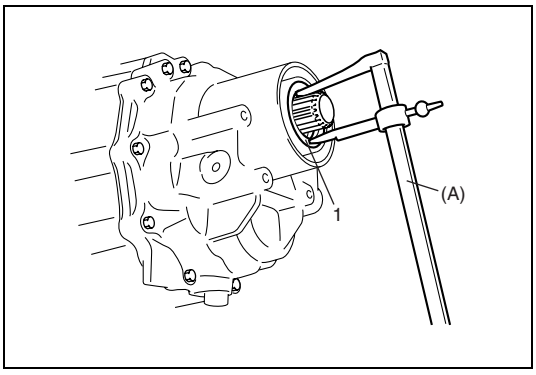

7) Remove extension case oil seal (1) using special tool.

Special tool
(A): 09913-50121

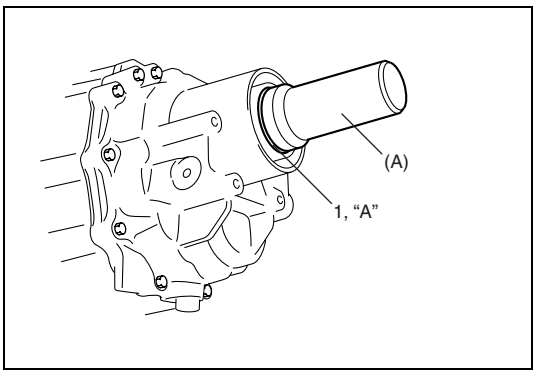

8) Install extension case oil seal (1) to extension case with its spring side inward.
   Use special tool and hammer for installation and apply grease to oil seal lip.

“A”: Grease 99000-25010

Special tool
(A): 09913-85210

9) Install gear shift control arm.
10) Install rear mounting bracket.
11) Install propeller shaft No.1 referring to “Propeller Shafts” in Section 4B.
12) Install gear shift control lever referring to “Gear Shift Control Lever Assembly Removal and Installation” in this section.
13) Fill transmission with oil referring to “Manual Transmission Oil Change” in this section.

Gear Shift Control Lever Assembly Components

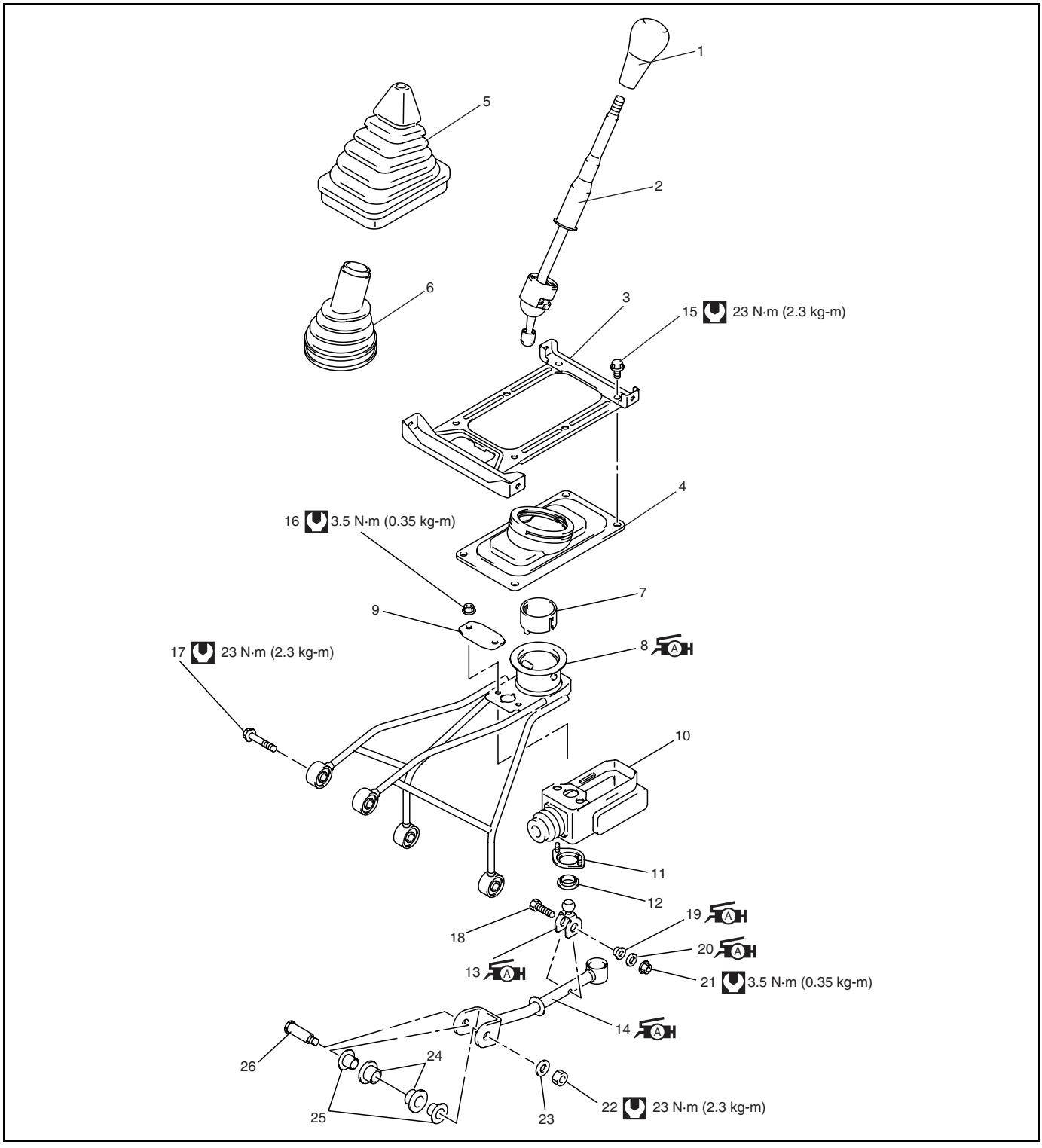

1. Gear shift knob	10. Gear shift lever No.4 boot	19. Gear shift control shaft bush : Apply grease 99000-25010 to bush.
2. Gear shift control lever	11. Gear shift stopper plate	20. Gear shift control joint washer : Apply grease 99000-25010 to washer.
3. Gear shift control boot cover	12. Gear shift control joint bush	21. Gear shift control joint nut
4. Gear shift lever No. 1 boot	13. Gear shift control joint : Apply grease 99000-25010 to connected part.	22. Shift lever No.1 nut
5. Gear shift lever No. 3 boot	14. Gear shift control shaft : Apply grease 99000-25010 to connected part.	23. Shift lever No.1 washer
6. Gear shift lever No. 2 boot	15. Gear shift control boot cover bolt	24. Joint inner bush
7. Gear shift lever case cover	16. Gear shift control boot plate nut	25. Joint outer bush
8. Gear shift control arm : Apply grease 99000-25010 to arm inside.	17. Shift lever No.2 bolt	26. Shift lever No.1 bolt
9. Gear shift control boot plate	18. Gear shift control joint bolt	Tightening torque

Gear Shift Control Lever Assembly Removal and Installation

Removal

1) Remove console box.

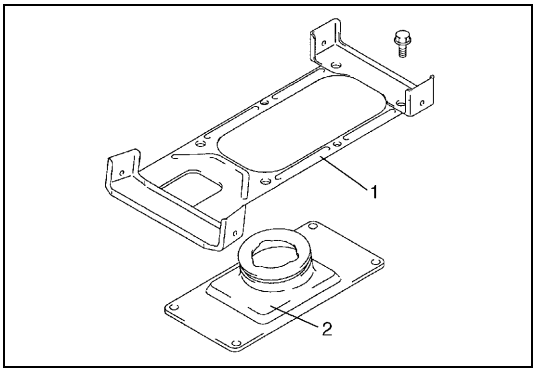

2) Remove gear shift control boot cover (1) from floor panel and gear shift lever No.1 boot (2).

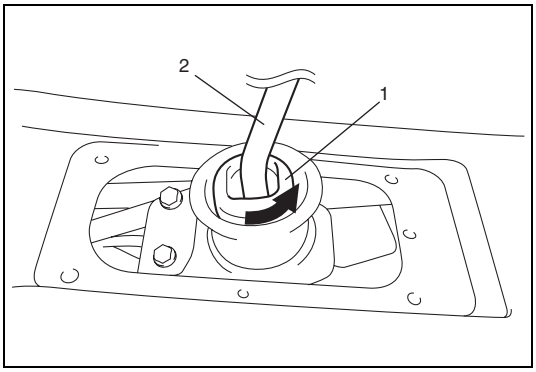

3) Remove gear shift control lever (2) while pushing and turning gear shift lever case cover (1) counterclockwise.
4) Drain transmission oil referring to “Manual Transmission Oil Change” in this section.
5) Remove exhaust pipe referring to “Exhaust Pipe” in Section 6K2.
6) Remove propeller shaft No.1 and No.2 referring to “Propeller Shafts” in Section 4B.

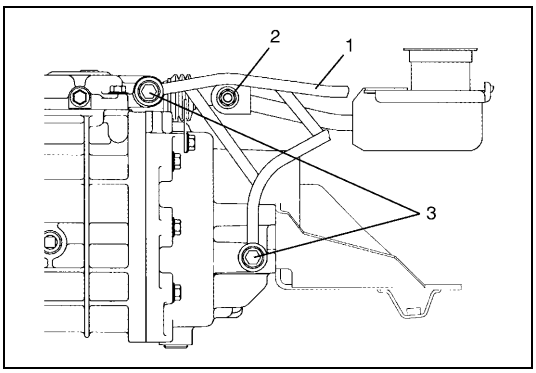

7) Remove gear shift control arm assembly (1).

2. Shift lever No.1 bolt	
3. Shift lever No.2 bolts	

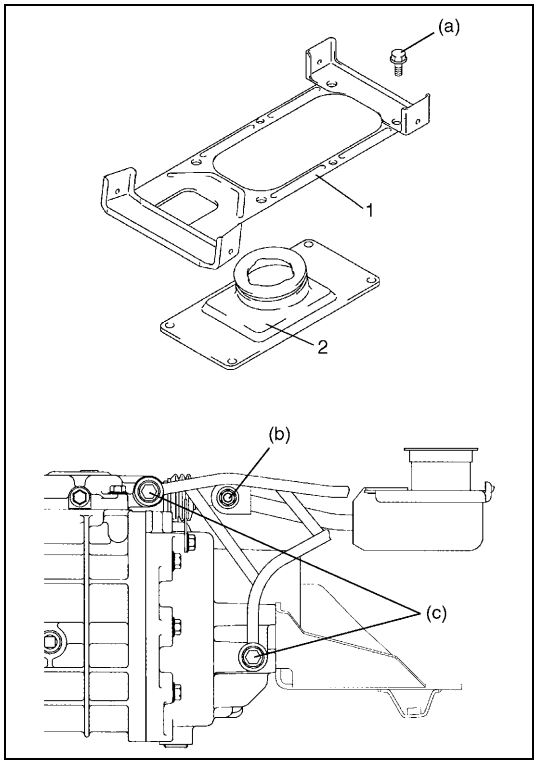

Installation

Reverse removal procedure for installation noting the following.

- Tighten bolts and nut to specified torque as follows.

Tightening torque
Gear shift control boot cover bolt
(a): 23 N·m (2.3 kg-m, 17.0 lb-ft)
Shift lever No.1 nut
(b): 23 N·m (2.3 kg-m, 17.0 lb-ft)
Shift lever No.2 bolt
(c): 23 N·m (2.3 kg-m, 17.0 lb-ft)

Gear Shift Control Lever Assembly Disassembly and Reassembly

Disassembly and reassembly component parts referring to “Gear Shift Control Lever Assembly Components” in this section.

Gear Shift Control Lever Assembly Inspection

- Check that gear shift control lever moves smoothly without abnormal noise.
- Check bushes and boot for damage and deterioration.
- If abnormality is found, replace or repair it.

Unit Repair Overhaul

Manual Transmission Unit Components

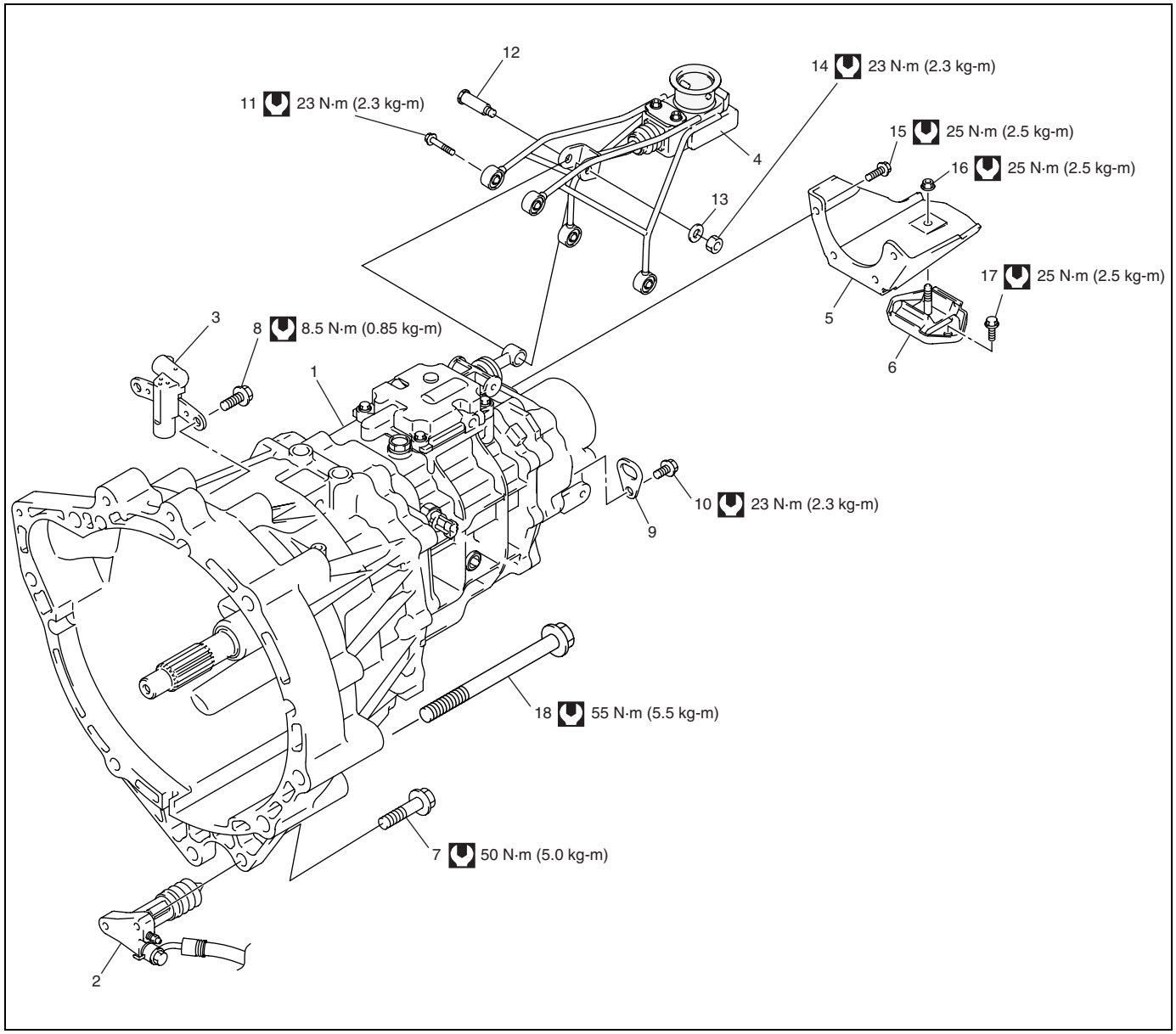

1. Transmission	8. CKP sensor bolt	15. Rear mounting bracket bolt
2. Clutch operating cylinder	9. Transmission hook	16. Rear mounting bracket nut
3. CKP sensor	10. Transmission hook bolt	17. Rear mounting bolt
4. Gear shift control lever assembly	11. Shift lever No.2 bolt	18. Transmission case bolt
5. Rear mounting bracket	12. Shift lever No.1 bolt	Tightening torque
6. Rear mounting	13. Shift lever No.1 washer	
7. Clutch operating cylinder bolt	14. Shift lever No.1 nut	

Transmission Unit Dismounting and Remounting

Dismounting

1) Disconnect negative cable at battery.
2) Remove gear shift control lever referring to “Gear Shift Control Lever Assembly Removal and Installation” in this section.
3) Remove CKP sensor referring to “Crankshaft Position (CKP) Sensor (Engine Speed Sensor) Removal and Installation” in Section 6E2.
4) Remove propeller shaft No.1 and No.2 referring to “Propeller Shafts” in Section 4B.
5) Remove exhaust pipe referring to “Exhaust Pipe” in Section 6K2.
6) Remove starting motor from transmission case referring to “Starting Motor Dismounting and Remounting” in Section 6G2.

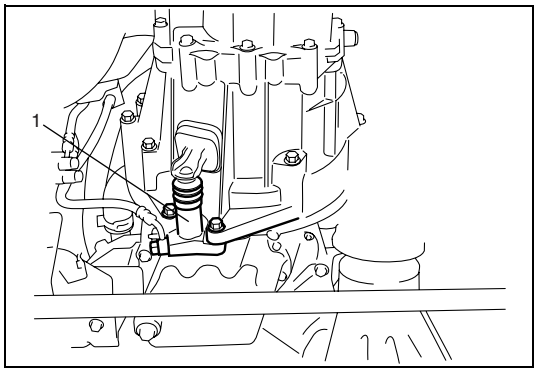

7) Remove clutch operating cylinder (1) referring to “Clutch Operating Cylinder Removal and Installation” in Section 7C2.

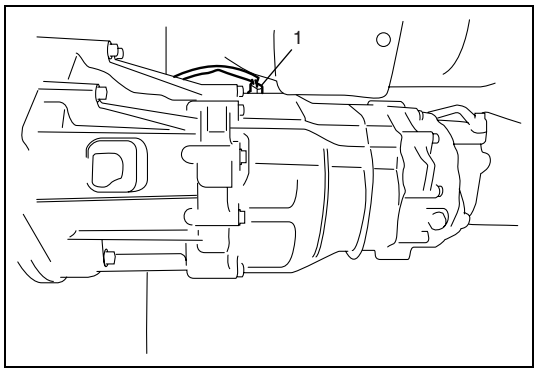

8) Disconnect back up lamp switch coupler (1).
9) Undo wiring harness clamp.
10) Support transmission with transmission jack.

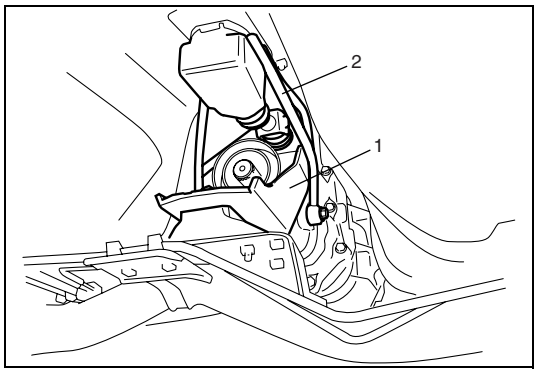

11) Remove rear mounting bracket (1).
12) Remove gear shift control arm (2).
13) Remove transmission to engine bolts and nut.
14) Pull transmission out so as to disconnect input shaft from clutch disc, and then lower it.

Remounting

Reverse dismounting procedure for remounting noting the following.

- Install clutch operating cylinder referring to “Clutch Operating Cylinder Removal and Installation” in Section 7C2.
- Tightening bolts and nuts to specified torque referring to “Manual Transmission Unit Components” in this section.
- Set wiring harness clamps securely.
- Fill transmission with oil as specified referring to “Manual Transmission Oil Change” in this section.
- Connect battery and check function of engine, clutch and transmission.

Gear Shift Lever Case Assembly Components

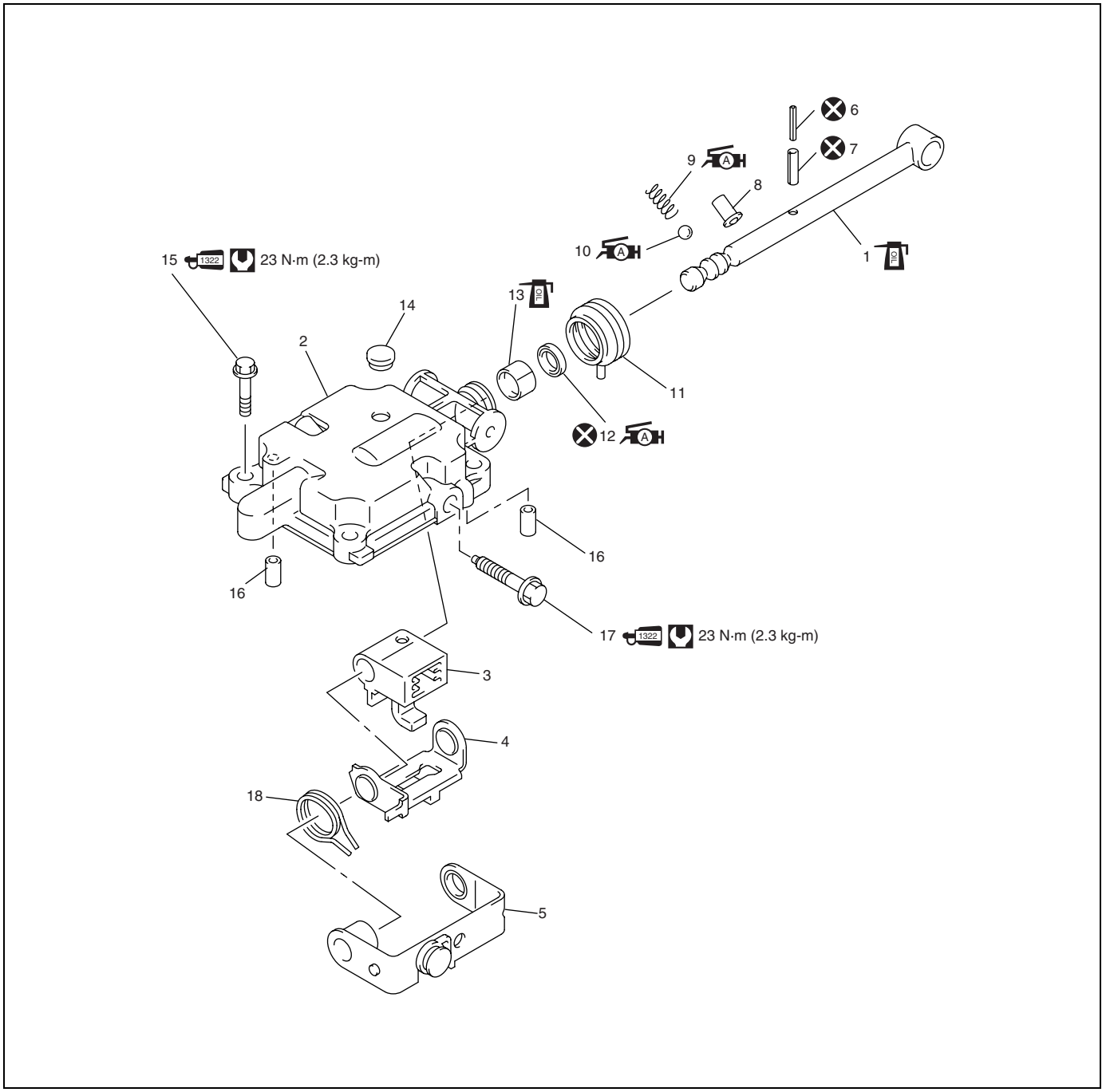

1. Gear shift shaft	8. Gear shift locating retainer	15. Gear shift lever case bolt : Apply thread lock 99000-32110 to bolt thread.
2. Gear case	9. Gear shift locating spring : Apply grease 99000-25010 to spring.	16. Knock pin
3. Gear shift & select arm	10. Gear shift locating ball : Apply grease 99000-25010 to ball.	17. Gear shift stop bolt : Apply thread lock 99000-32110 to bolt thread.
4. Gear shift interlock plate	11. Gear shift shaft boot	18. Gear select return spring
5. Reverse gear shift limit plate	12. Gear shift shaft oil seal : Apply grease 99000-25010 to seal lip.	Tightening torque
6. Gear shift arm inner pin	13. Gear shift case bush	Do not reuse.
7. Gear shift arm outer pin	14. Gear shift case plug	Apply transmission oil.

Gear Shift Lever Case Assembly Removal and Installation

Removal

1) Dismount transmission referring to “Transmission Unit Dismounting and Remounting” in this section.

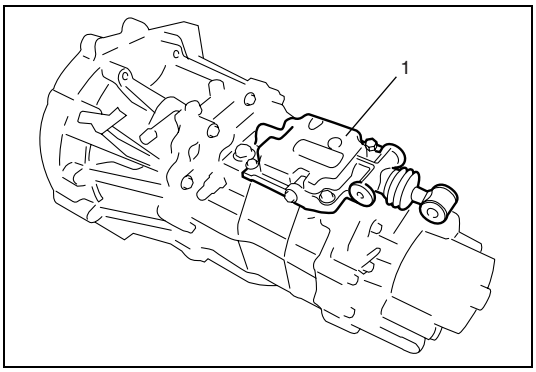

2) Remove gear shift lever case assembly (1) from transmission rear case.

Installation

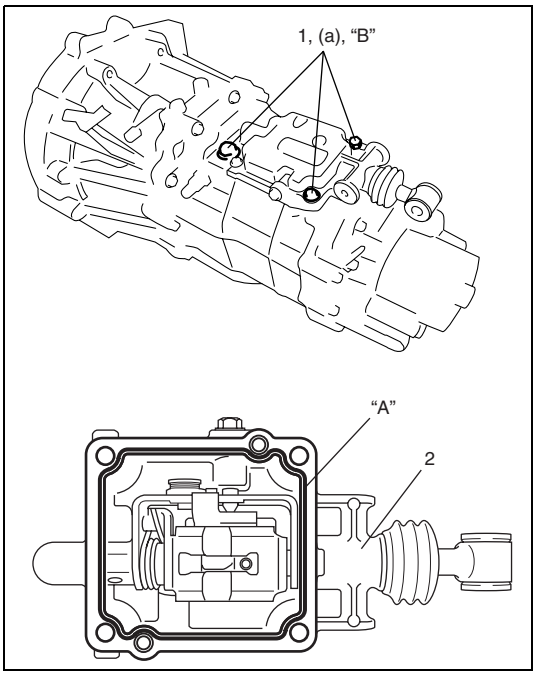

1) Clean mating surface of both rear case and gear shift lever case (2), and uniformly apply sealant to lever case as shown in figure.

“A”: Sealant 99000-31260

2) Install lever case with sealant to rear case and apply thread lock cement to lever case bolts (1), then tighten them to specified torque.

“B”: Thread lock cement 99000-32110

Tightening torque
Gear shift lever case bolt (a): 23 N·m (2.3 kg-m, 17.0 lb-ft)

3) Remount transmission referring to “Transmission Unit Dismounting and Remounting” in this section.

Gear Shift Lever Case Assembly Disassembly and Reassembly

Disassembly

1) Remove gear shift case plug.

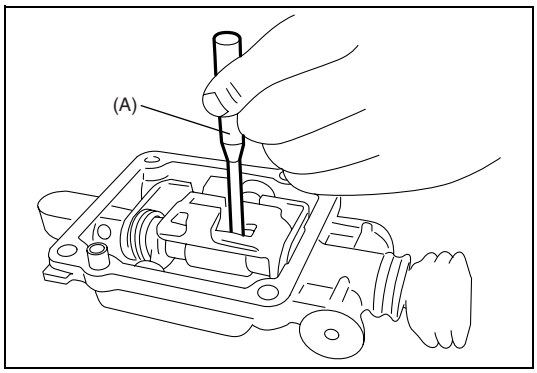

2) Drive out gear shift arm pin using special tool, and then disassemble components parts.

CAUTION:
Be careful to disconnect gear shift shaft from gear shift lever case so that gear shift locating ball and gear shift locating spring may be jumped out.

Special tool
(A): 09925-78210

Reassembly

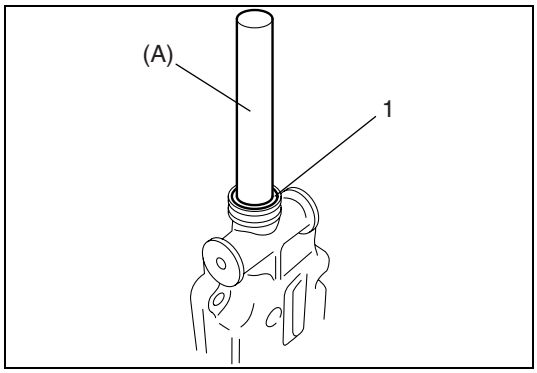

1) Install new gear shift shaft oil seal (1) to gear shift lever case using special tool.

Special tool
(A): 09923-46020

2) Assemble components parts referring to “Gear Shift Lever Case Assembly Components” in this section.

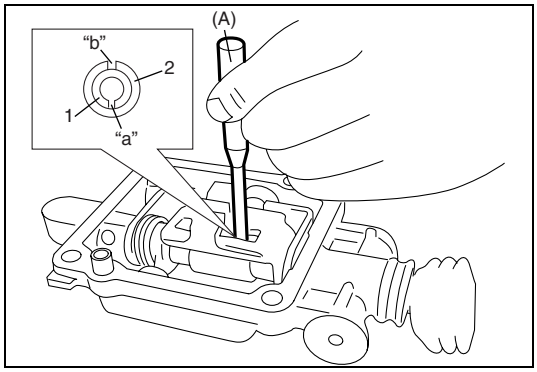

3) Set new gear shift arm inner pin (1) and outer pin (2) facing each gap (“a”, “b”) as shown in figure.
Drive them in using special tool.

Special tool
(A): 09925-78210

Back Up Lamp Switch Removal and Installation

Removal

1) Dismount transmission referring to “Transmission Unit Dismounting and Remounting” in this section.

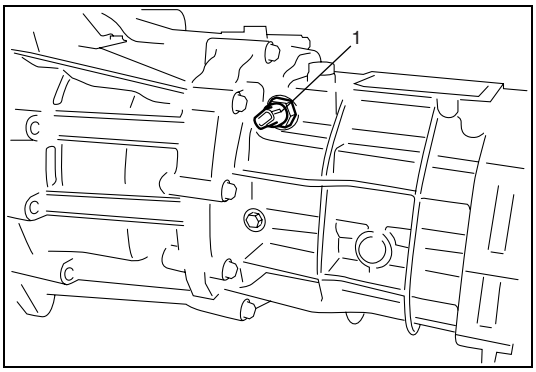

2) Remove back up lamp switch (1).

Installation

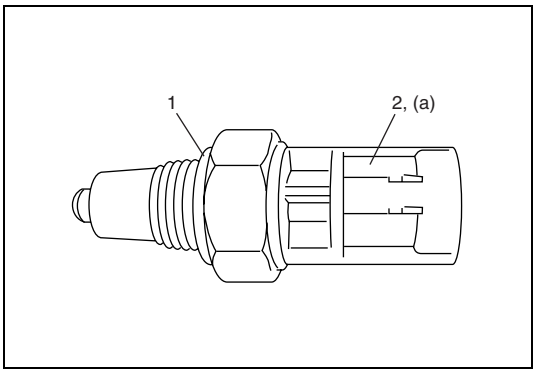

1) Apply oil to new O-ring (1) and tighten back up lamp switch (2) to specified torque.

Tightening torque
Back up lamp switch (a): 23 N·m (2.3 kg-m, 17.0 lb-ft)

2) Remount transmission referring to “Transmission Unit Dismounting and Remounting” in this section.

Back Up Lamp Switch Inspection

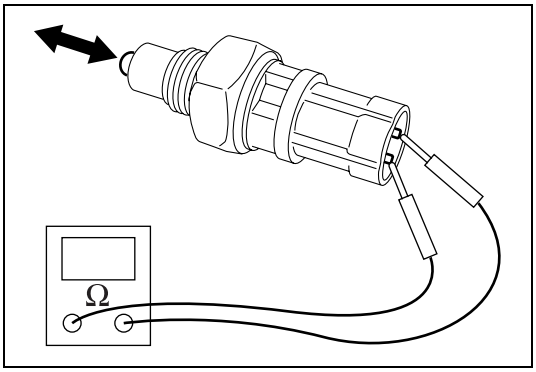

Check back up lamp switch for function using ohmmeter.

Switch ON (Push): Continuity
Switch OFF (Release): No continuity

Manual Transmission Assembly Components

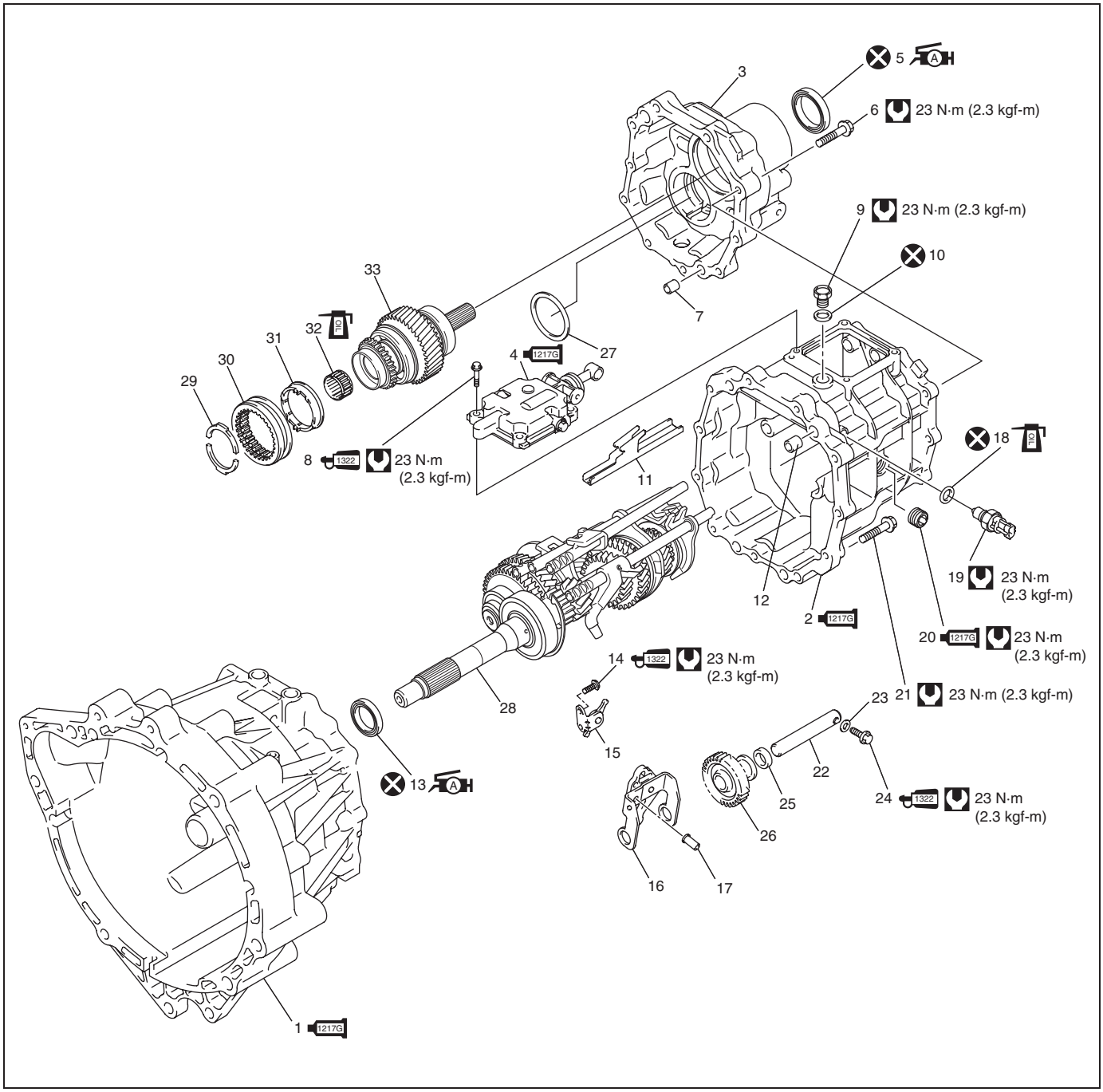

1. Transmission front case : Apply sealant 99000-31260 to mating surface of front case and rear case.	13. Input shaft oil seal : Apply grease 99000-25010 to oil seal lip.	25. Reverse gear shaft washer
2. Transmission rear case : Apply sealant 99000-31260 to mating surface of rear case and extension case.	14. 5th gear shift inverse lever bolt : Apply thread lock 99000-32110 to all around thread part of bolt.	26. Reverse idler gear
3. Extension case	15. Low gear shift inverse lever	27. Countershaft shim
4. Gear shift lever case assembly : Apply sealant 99000-31260 to mating surface of rear case and gear shift lever case assembly.	16. Reverse gear shift lever	28. Input shaft & countershaft assembly
5. Extension oil seal : Apply grease 99000-25010 to oil seal lip.	17. Reverse shift locating	29. 5th speed synchronizer lever
6. Extension case bolt	18. O-ring	30. 5th speed synchronizer sleeve
7. Knock pin	19. Back up lamp switch	31. 5th speed synchronizer ring
8. Gear shift lever case bolt : Apply thread lock 99000-32110 to all around thread part of bolt.	20. Oil filler plug : Apply sealant 99000-31260 to all around thread part of bolt.	32. Input shaft needle bearing
9. Oil hole plug	21. Transmission case bolt	33. Output shaft assembly
10. Oil hole gasket	22. Reverse gear shaft	Tightening torque
11. Oil gutter	23. Reverse shaft bolt washer	Do not reuse.
12. Knock pin	24. Reverse shaft bolt : Apply thread lock 99000-32110 to all around thread part of bolt.	Apply transmission oil.

Manual Transmission Assembly Disassembly and Reassembly

Disassembly

1) Remove clutch release bearing and release fork referring to “Clutch Cover, Clutch Disc, Flywheel and Release Bearing Removal and Installation” in Section 7C2.
2) Remove gear shift lever case assembly referring to “Gear Shift Lever Case Assembly Removal and Installation” in this section.
3) Remove extension case.
4) Remove output shaft assembly.
5) Remove reverse shaft bolt (1) and back up lamp switch (2).

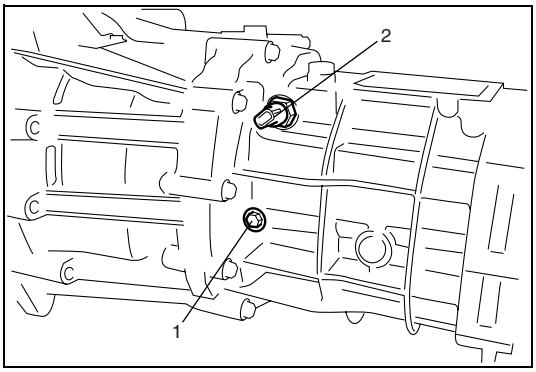

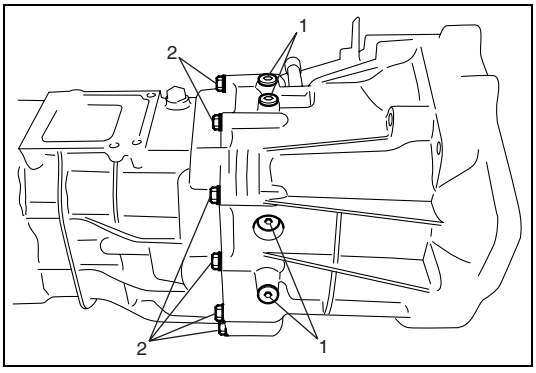

6) Remove gear shift locating bolts (1), then take out locating springs and gear shift shaft balls.
7) Remove rear to front case bolts (2), then separate rear case from front case tapping front case flange with plastic hammer.
8) Remove oil gutter.

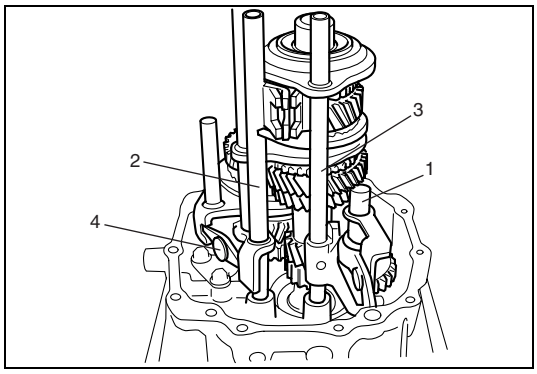

9) Remove reverse shaft assembly (1).
10) Remove 5th gear shift inverse lever (4).
11) Remove low speed gear shift shaft (2) and 5th & reverse gear shift fork (3).
12) Remove input shaft needle bearing, 5th speed synchronizer ring, 5th speed synchronizer levers and 5th speed synchronizer sleeve.

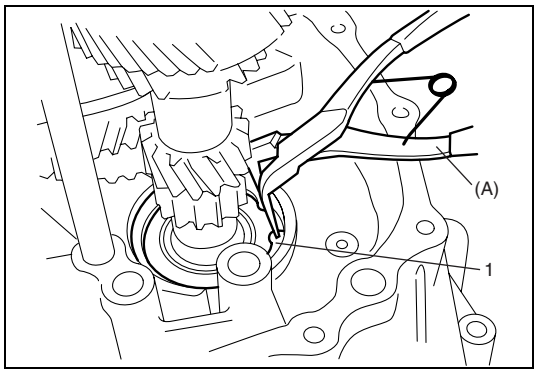

13) Remove input shaft front bearing circlip (1) from case using special tool.

Special tool
(A): 09900-06106

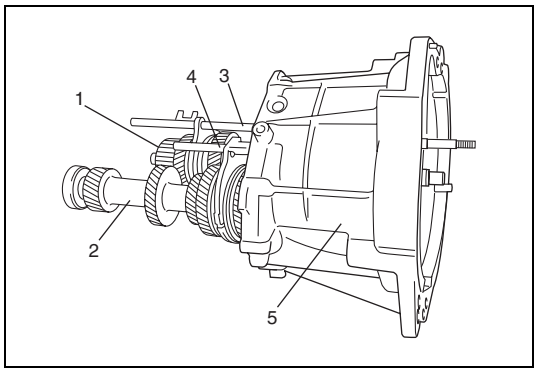

14) Remove input shaft assembly (1), countershaft assembly (2), high speed gear shift fork (3) and low speed gear shift fork (4) as assembly from front case (5) tapping input shaft end by plastic hammer lightly.

Reassembly

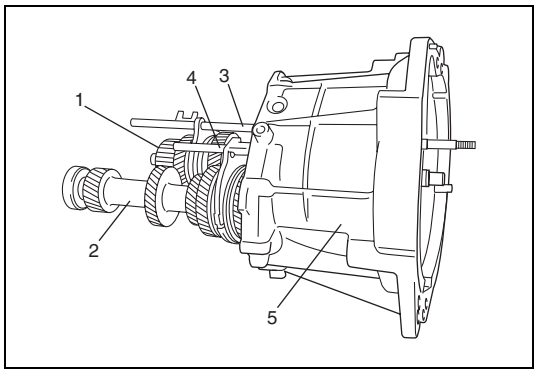

1) Assemble input shaft assembly (1), countershaft assembly (2), high speed gear shift fork (3) and low speed gear shift fork (4), then install them all together into front case (5).

CAUTION:
Take care not to damage oil seal lip by input shaft, or oil leakage may take place.

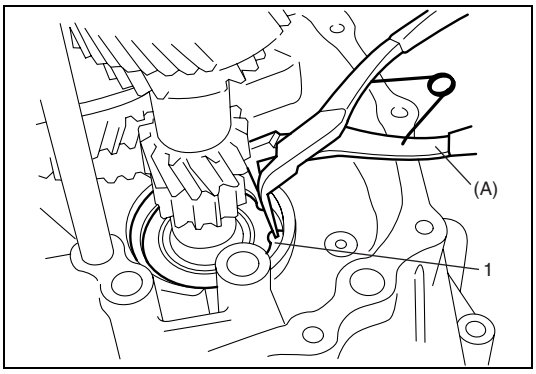

2) Install input shaft front bearing circlip (1) using special tool.

Special tool
(A): 09900-06106

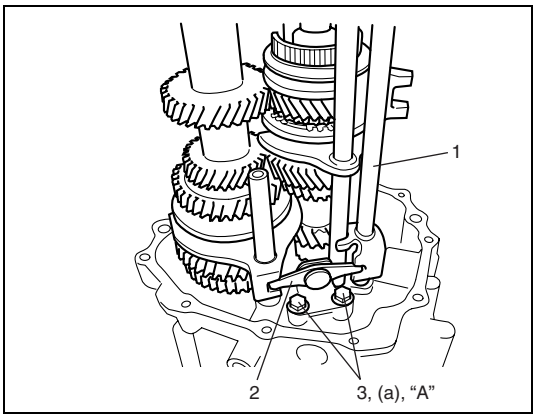

3) Install low speed gear shift shaft (1) and 5th gear shift inverse lever (2) and tighten with bolt (3) to which thread lock cement has been applied.

"A": Thread lock cement 99000-32110

Tightening torque
5th gear shift inverse lever bolt
(a): 23 N·m (2.3 kg-m, 17.0 lb-ft)

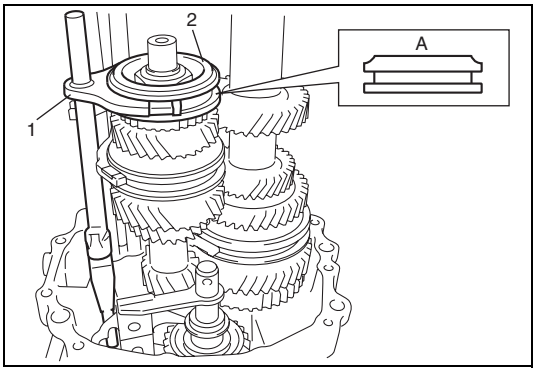

4) Fit 5th & reverse gear shift fork (1) to 5th speed synchronizer sleeve (2), and install them into input shaft and front case in specified direction as shown in figure.

A: Chamfered side

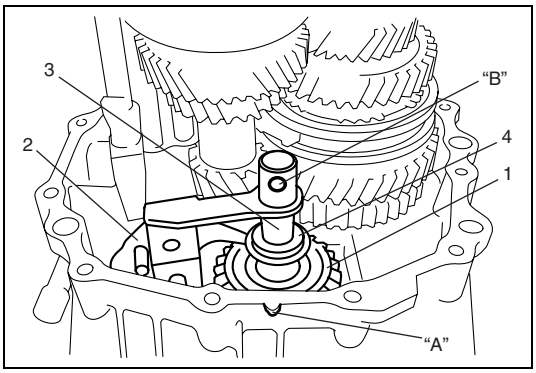

5) Set reverse idler gear (1), reverse gear shift lever (2) and reverse gear shaft washer (4), insert reverse gear shaft (3) into case through idler gear and then align hole "B" in shaft with protrusion "A" in case.
6) Install oil gutter

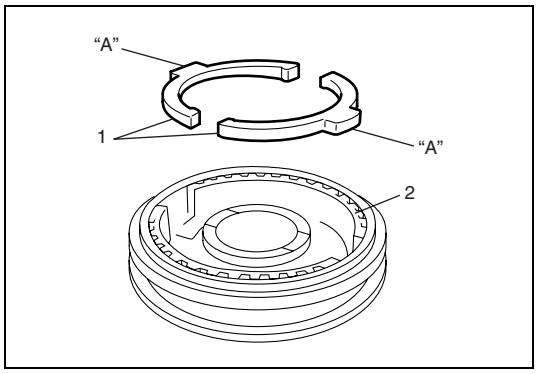

7) Install 5th speed synchronizer levers and 5th speed synchronizer ring as follows.
   a) Fit 5th speed synchronizer levers (1) to hub (2) aligning protrusion "A" of 5th speed synchronizer levers with groove of hub.

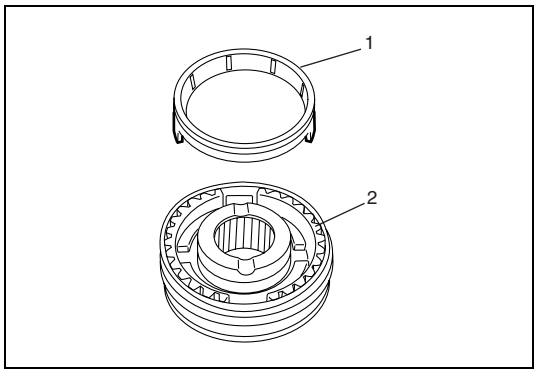

   b) Install synchronizer ring (1) to hub (2) in specified direction as shown in figure.

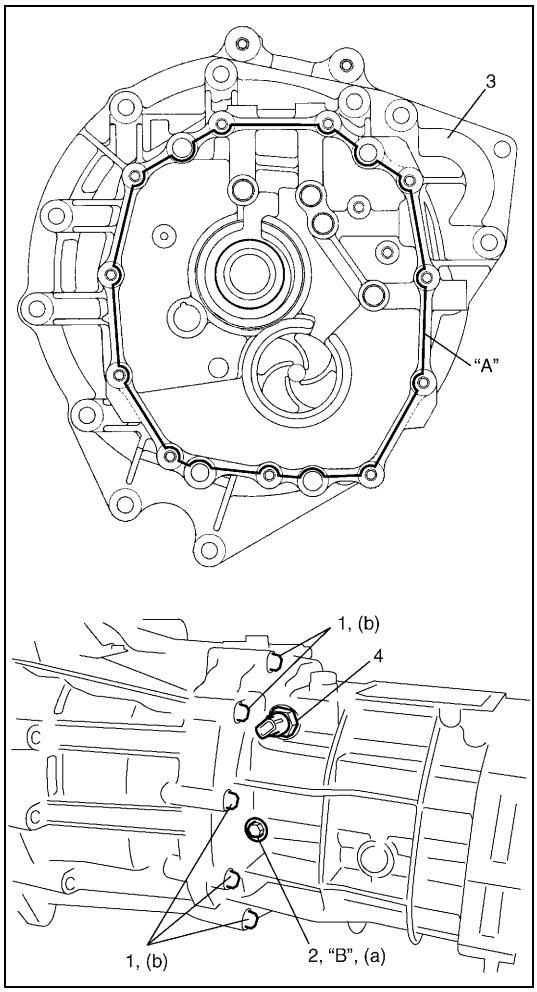

8) Clean mating surfaces of both front and rear cases, and uniformly apply sealant to front case (3) as shown in figure.

   "A": Sealant 99000-31260

9) Tighten case bolts (1) to specified torque.

   Tightening torque
   Transmission case bolt (b): 23 N·m (2.3 kg-m, 17.0 lb-ft)

10) Apply thread lock cement to reverse shaft bolt (2), and tighten it.

    "B": Thread lock cement 99000-32110

    Tightening torque
    Reverse shaft bolt (a): 23 N·m (2.3 kg-m, 17.0 lb-ft)

11) Install back up lamp switch (4) referring to "Back Up Lamp Switch Removal and Installation" in this section.

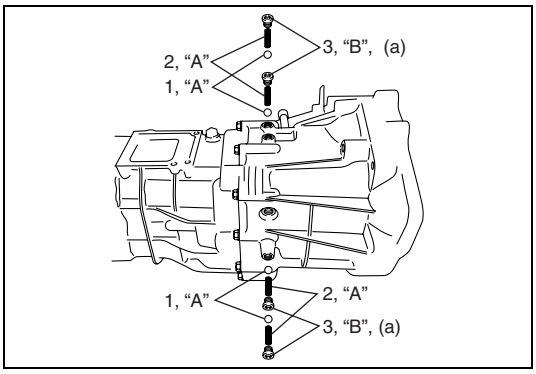

12) Apply grease to gear shift shaft balls (1) and locating springs (2), then install them.
Apply thread lock cement to gear shift locating bolts (3), and then tighten them.

"A": Grease 99000-25010

"B": Thread lock cement 99000-32110

Tightening torque
Gear shift locating bolt (a): 23 N·m (2.3 kg-m, 17.0 lb-ft)

13) Install output shaft into rear case.

14) Select a countershaft shim and output shaft shim as follows.
a) Measure depth "a" from mating surface of extension case (1) to face processed for installation of countershaft rear bearing (2) and measure depth "c" from mating surface of extension case to face processed for installation of output shaft rear bearing (4) using vernier caliper
b) Measure height "b" from mating surface of rear case (3) to countershaft rear bearing (2) and measure height "d" from mating surface of rear case (3) to output shaft rear bearing (4) using vernier caliper.
c) Calculate "a" – "b" and "c" – "d", and select a shim according to the following table.

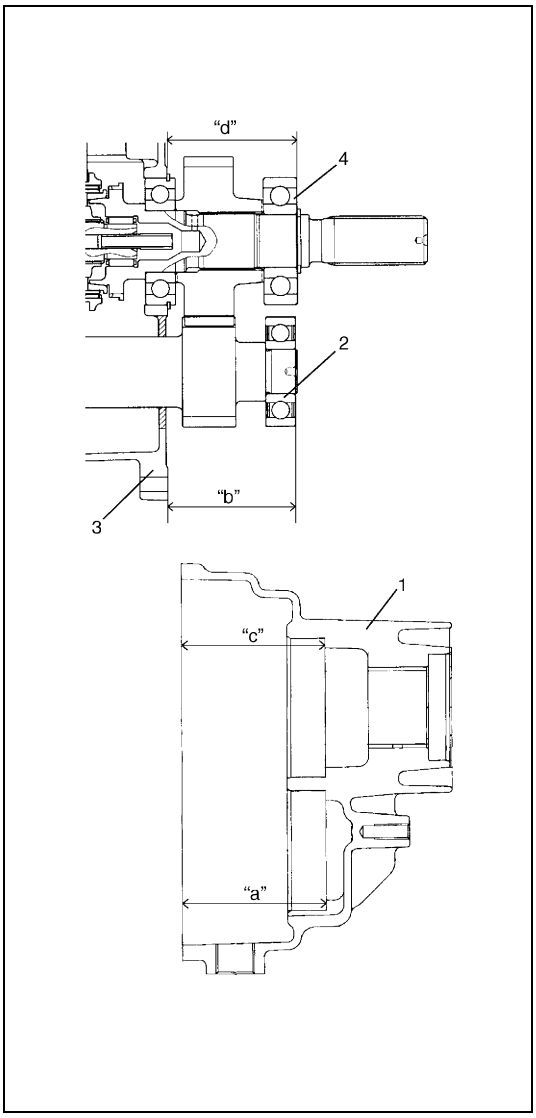

Countershaft shim selection table

Clearance "a" – "b"	Thickness of countershaft shim
1.15 – 1.24 mm (0.045 – 0.048 in.)	0.90 mm (0.035 in.)
1.25 – 1.34 mm (0.049 – 0.052 in.)	1.00 mm (0.039 in.)
1.35 – 1.44 mm (0.053 – 0.056 in.)	1.10 mm (0.043 in.)
1.45 – 1.54 mm (0.057 – 0.060 in.)	1.20 mm (0.047 in.)
1.55 – 1.64 mm (0.061 – 0.064 in.)	1.30 mm (0.051 in.)
1.65 – 1.74 mm (0.065 – 0.068 in.)	1.40 mm (0.055 in.)
1.75 – 1.84 mm (0.069 – 0.072 in.)	1.50 mm (0.059 in.)
1.85 – 1.94 mm (0.073 – 0.076 in.)	1.60 mm (0.063 in.)
1.95 – 2.04 mm (0.077 – 0.080 in.)	1.70 mm (0.067 in.)
2.05 – 2.14 mm (0.081 – 0.084 in.)	1.80 mm (0.071 in.)
2.15 – 2.24 mm (0.085 – 0.088 in.)	1.90 (0.90 + 1.00) mm (0.075 (0.035 + 0.039) in.)

Output shaft shim selection table

Clearance "c" – "d"	Thickness of counter-shaft shim
0 – 0.09 mm (0 – 0.004 in.)	–
0.10 – 0.19 mm (0.004 – 0.007 in.)	0.10 mm (0.004 in.)
0.20 – 0.29 mm (0.008 – 0.011 in.)	0.20 mm (0.008 in.)
0.30 – 0.39 mm (0.012 – 0.015 in.)	0.30 mm (0.012 in.)
0.40 – 0.49 mm (0.016 – 0.019 in.)	0.40 mm (0.016 in.)
0.50 – 0.59 mm (0.020 – 0.023 in.)	0.50 (0.20 + 0.30) mm (0.020 (0.008 + 0.012) in.)
0.60 – 0.69 mm (0.024 – 0.027 in.)	0.60 (0.20 + 0.40) mm (0.024 (0.008 + 0.016) in.)
0.70 – 0.79 mm (0.028 – 0.031 in.)	0.70 (0.30 + 0.40) mm (0.028 (0.012 + 0.016) in.)

15) Install selected countershaft shim and output shaft shim to extension case.

16) Clean mating surface of both rear case (1) and extension case, and uniformly apply sealant to rear case as shown in figure.

"A": Sealant 99000-31260

17) Tighten case bolts (2) to specified torque.

Tightening torque
Extension case bolt (a): 23 N·m (2.3 kg-m, 17.0 lb-ft)

18) Install gear shift lever case assembly (3) referring to "Gear Shift Lever Case Assembly Removal and Installation" in this section.

19) Install clutch release bearing and release fork referring to "Clutch Cover, Clutch Disc, Flywheel and Release Bearing Removal and Installation" in Section 7C2.

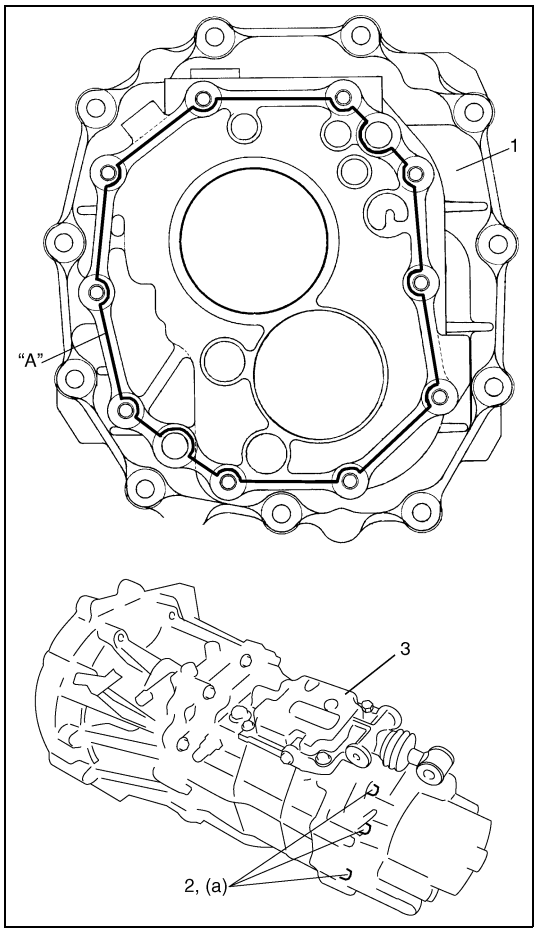

Locating Spring Inspection

Check locating springs for deterioration and replace with new ones if necessary.

Locating spring free length
Standard: 44.6 mm (1.756 in.)
Service limit: 40.1 mm (1.579 in.)

Front Case Disassembly and Assembly

Disassembly

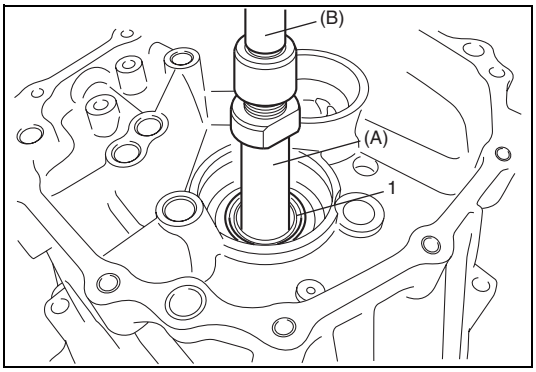

1) Pull out input shaft oil seal (1) using special tools, if necessary.

Special tool
(A): 09941-64511
(B): 09930-30104

Assembly

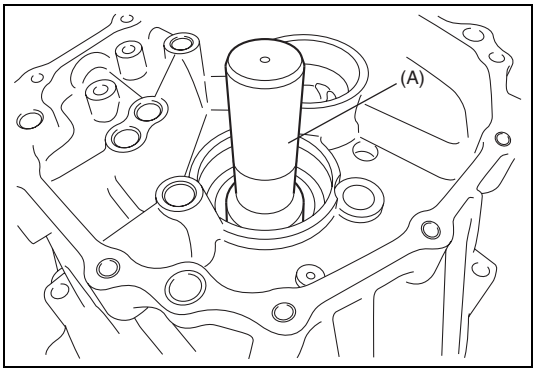

1) Install input shaft oil seal to front case with its spring side facing upward.
   use special tool and hammer for installation and apply grease to oil seal lip.

: Grease 99000-25010

Special tool
(A): 09913-76010

Gear Shift Shaft and Fork Components

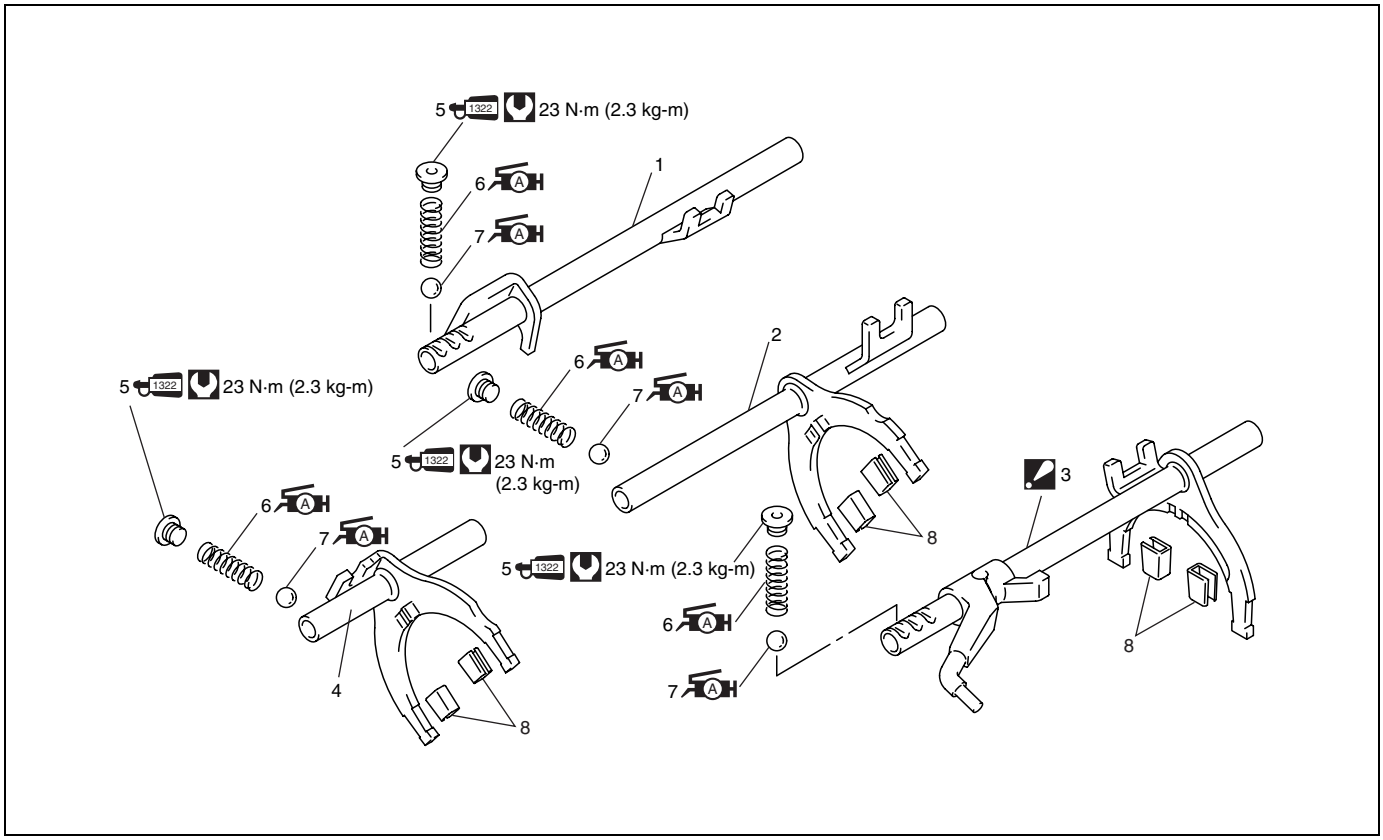

	1. Low speed gear shift shaft		4. Low speed gear shift fork	A H	7. Gear shift shaft ball : Apply grease 99000-25010 to ball.
	2. High speed gear shift fork	1322	5. Gear shift locating bolt : Apply thread lock 99000-32110 to bolt thread.		8. Gear shift shaft bush
	3. 5th & reverse gear shift fork : Never disassemble.	A H	6. Gear shift locating spring : Apply grease 99000-25010 to spring.		Tightening torque

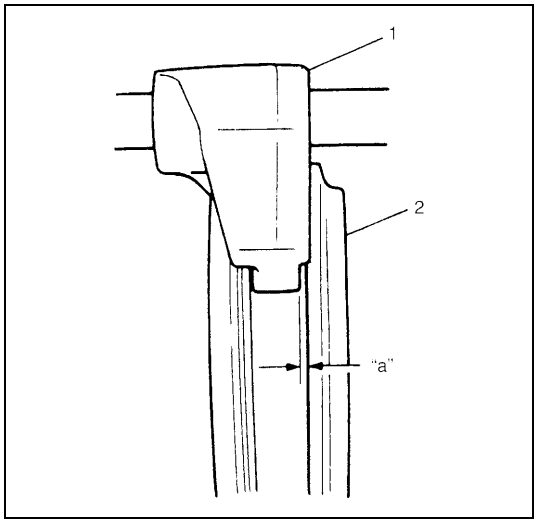

Gear Shift Fork Inspection

1) Using feeler gauge, check clearance between fork (1) and sleeve (2) and replace those parts if it exceeds limit below.

NOTE:

For correct judgement of parts replacement, carefully inspect contact portion of fork and sleeve.

Clearance between fork and sleeve
Service limit "a": 1.0 mm (0.039 in.)

2) Insert each gear shift shaft into case and check that it moves smoothly. If it doesn't, correct using oilstone, reamer or the like.

Input Shaft, Countershaft and Output Shaft Components

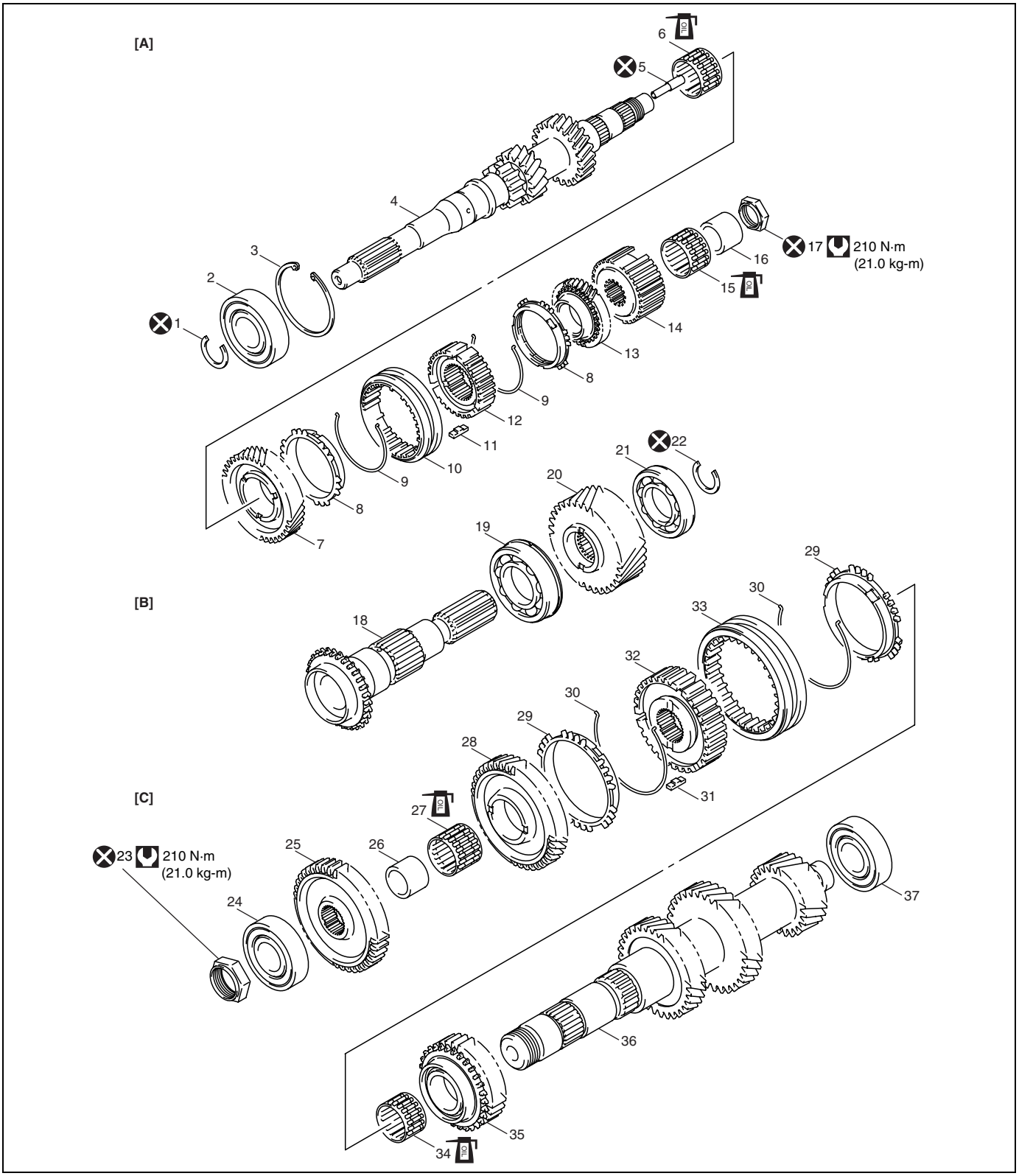

[A]: Input shaft assembly	13. 3rd gear	28. 1st gear
[B]: Output shaft assembly	14. 5th speed synchronizer hub	29. Low speed synchronizer ring
[C]: Countershaft assembly	15. High speed gear needle bearing	30. Low speed synchronizer spring
1. Snap ring	16. Input shaft 3rd gear bush	31. Low speed synchronizer key
2. Input shaft front bearing	17. Input shaft 5th hub nut	32. Low speed synchronizer hub
3. Input shaft front bearing circlip	18. Output shaft	33. Low speed synchronizer sleeve
4. Input shaft	19. Output shaft front bearing	34. Countershaft gear needle bearing
5. Input shaft union	20. Output shaft gear	35. 2nd gear
6. High speed gear needle bearing	21. Output shaft rear bearing	36. Countershaft
7. 4th gear	22. Output shaft rear snap ring	37. Countershaft rear bearing
8. High speed synchronizer ring	23. Countershaft front bearing nut	Tightening torque
9. High speed synchronizer spring	24. Countershaft front bearing	Do not reuse.
10. High speed synchronizer sleeve	25. Countershaft reverse gear	Apply transmission oil.
11. High speed synchronizer key	26. Countershaft low needle bush	
12. High speed synchronizer hub	27. Countershaft gear needle bearing	

Input Shaft Assembly Disassembly and Reassembly

Disassembly

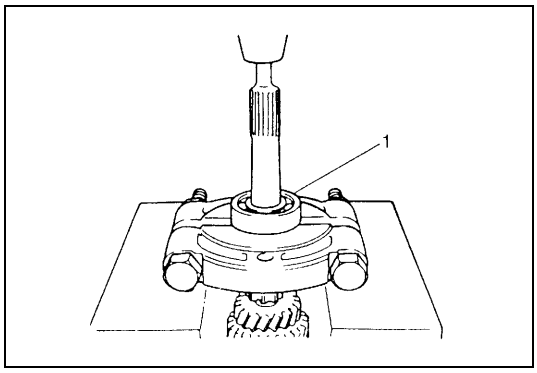

1) Remove snap ring.
2) Remove input shaft front bearing (1) using bearing puller and press, and then remove input shaft front bearing circlip.
3) Remove input shaft union.

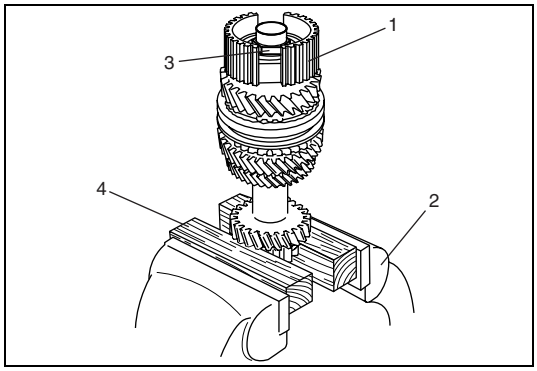

4) Hold part of reverse gear of input shaft assembly (1) with vise (2) through woodblock (4), remove input shaft 5th hub nut (3).

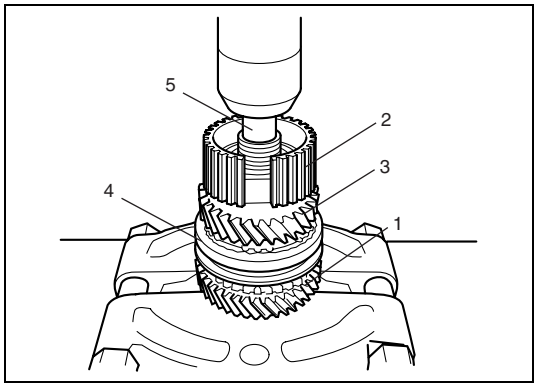

5) Apply bearing puller to 4th gear (1), and drive out 5th speed synchronizer hub (2), 3rd gear (3), high speed gear needle bearings, 3rd gear bush, high speed synchronizer assembly (4) and 4th gear all at once from input shaft using metal stick (5) and press.

CAUTION:
To avoid gear teeth from being damaged, support 4th gear at flat side of bearing puller.

Reassembly

1) Clean all components thoroughly, inspect them for any abnormality and replace with new ones as necessary.
2) To ensure lubrication, air blow oil holes (1) and make sure that they are free from any obstruction.

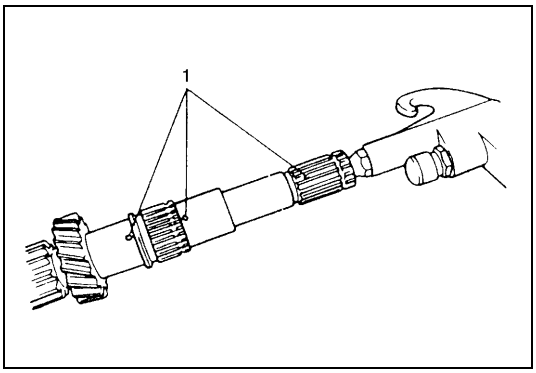

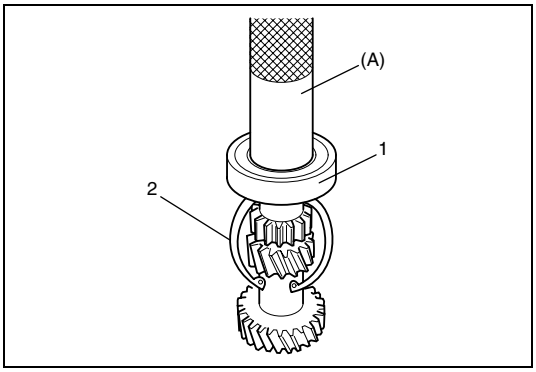

3) Drive in input shaft front bearing (1) to input shaft using special tool and hammer and then install snap ring.

Special tool
(A): 09940-51710

NOTE:

Input shaft front bearing circlip (2) must be installed before input shaft front bearing is installed.

4) Apply oil to high speed gear needle bearing, and then install needle bearing to input shaft.
   Install 4th gear and high speed synchronizer ring.

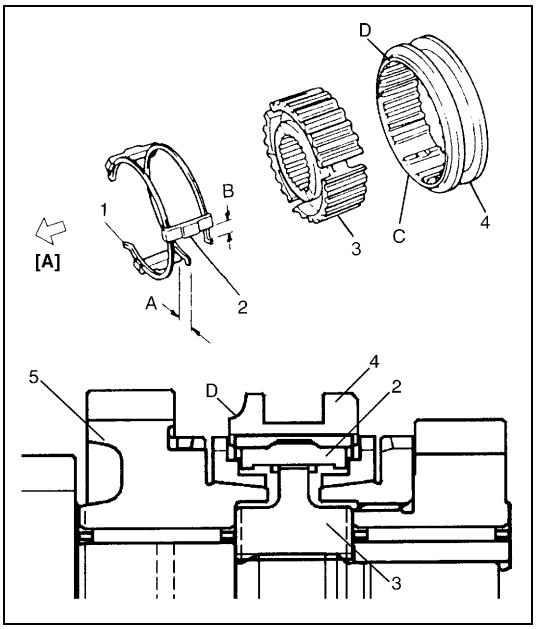

5) Assemble synchronizer sleeve (4) and hub (3) as follows.
   a) Fit high speed synchronizer sleeve to hub in specified direction as shown in figure.
   b) Insert 3 keys (2) to hub.
   c) Set springs (1) at specified position as shown in figure.

Synchronizer key installation position
: A = B

[A]:	4th gear side
C:	Key way
D:	Projecting end
5.	4th gear

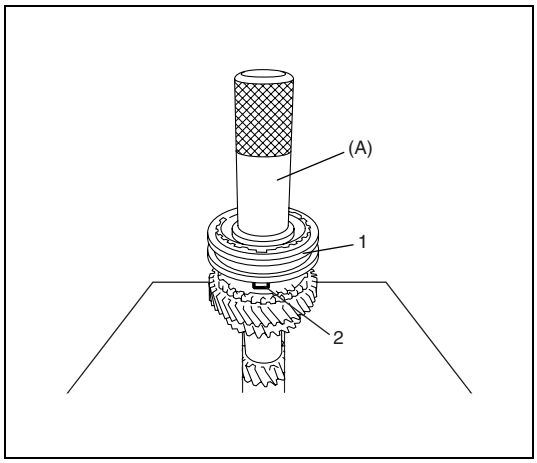

6) Drive in high speed synchronizer assembly (1) using special tool and hammer.

NOTE:

- **While press-fitting sleeve &hub, make sure that synchronizer ring key slots (2) are aligned with keys in sleeve & hub assembly.**
- **Check free rotation of 4th gear after press fitting sleeve & hub assembly.**

Special tool
(A): 09913-84510

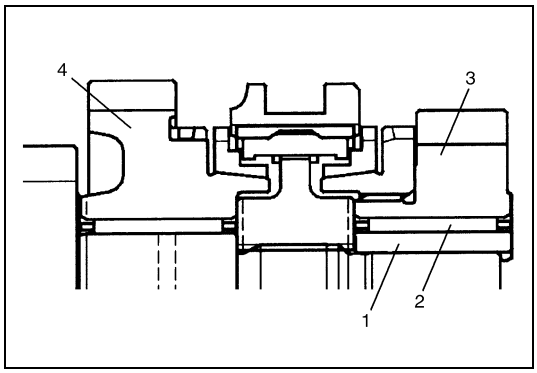

7) Apply oil to high speed gear needle bearing, and then install 3rd gear bush (1), high speed gear needle bearing (2) and 3rd gear (3).

4. 4th gear

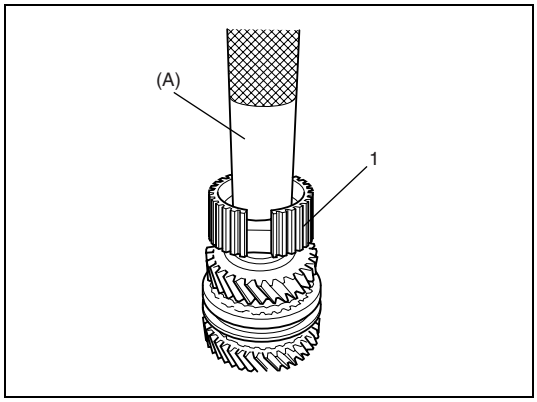

8) Press-fit 5th speed synchronizer hub (1) using special tool and hammer.

Special tool
(A): 09913-84510

9) Tighten input shaft 5th hub nut to specified torque in the same manner as step 4) of “Disassembly” in “Input Shaft Assembly Disassembly and Reassembly” in this section.

Tightening torque
Input shaft 5th hub nut: 210 N·m (21.0 kg-m, 152.0 lb-ft)

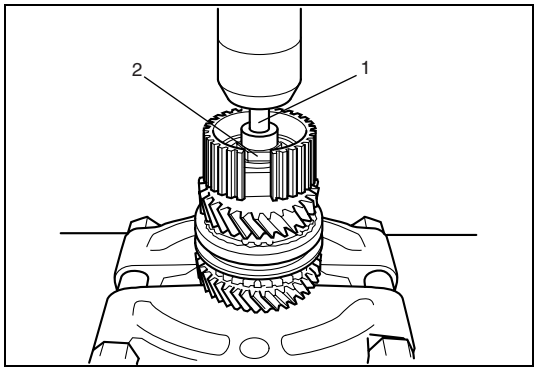

10) Caulk input shaft 5th hub nut (2) using caulking tool.
11) Drive in new input shaft union (1) using puller and hydraulic press.

Input Shaft Assembly Inspection

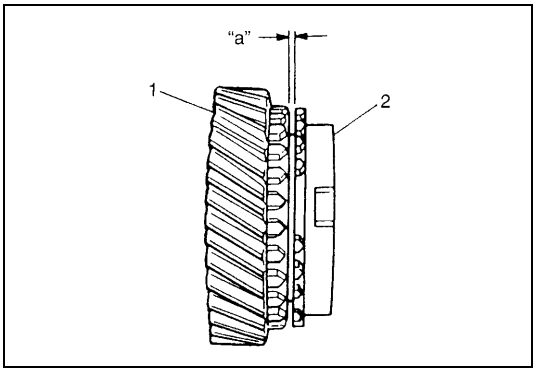

Check clearance "a" between ring (2) and gear (1), each chamfered teeth of gear, ring and sleeve, then determine parts replacement.

Clearance between synchronizer ring and gear
Standard "a": 1.0 – 1.4 mm (0.039 – 0.055 in.)
Service limit "a": 0.5 mm (0.019 in.)

Countershaft Assembly Disassembly and Reassembly

Disassembly

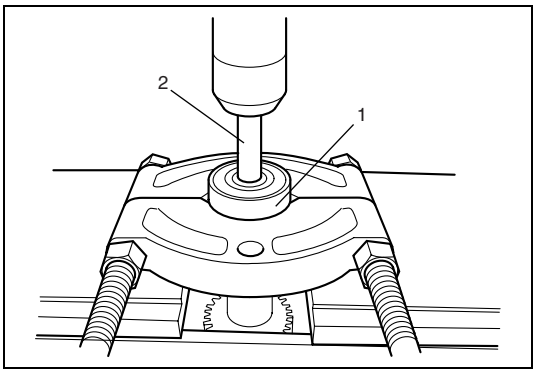

1) Remove countershaft rear bearing (1) using bearing puller, metal stick (2) and hydraulic press.
2) Remove countershaft front bearing nut in the same manner as step 4) of "Disassembly" in "Input Shaft Assembly Disassembly and Reassembly" in this section.

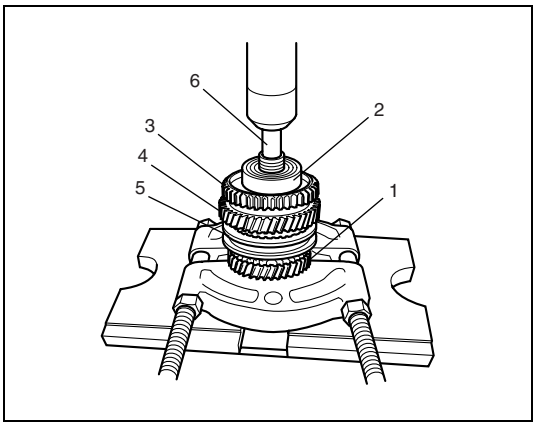

3) Apply bearing puller to 2nd gear (1), and drive out countershaft front bearing (2), countershaft reverse gear (3), 1st gear (4), countershaft gear needle bearings, countershaft low needle bearing, low speed synchronizer assembly (5) and 2nd gear all at once from countershaft using metal stick (6) and hydraulic press.

CAUTION:
To avoid gear teeth from being damaged, support 2nd gear at flat side of bearing puller.

Reassembly

1) Clean all components thoroughly, inspect them for any abnormality and replace with new ones as necessary.

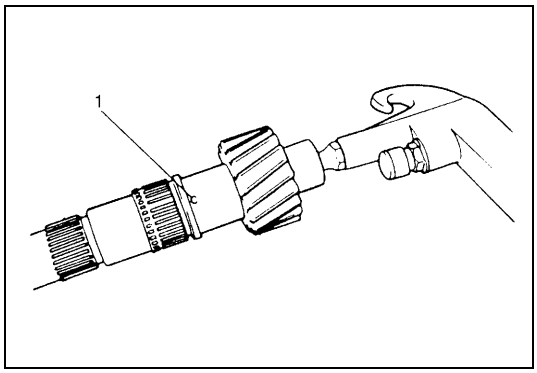

2) To ensure lubrication, air blow oil holes (1) and make sure that they are free from any obstruction.

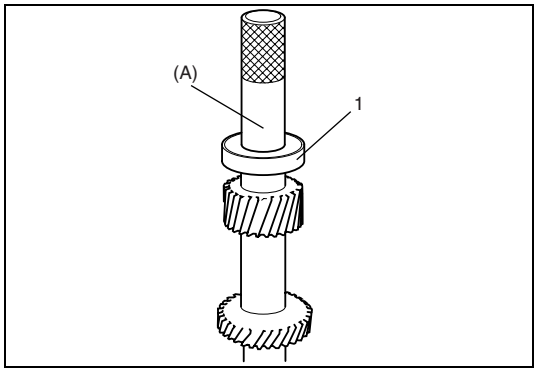

3) Drive in countershaft rear bearing (1) using special tool and hammer.

Special tool
(A): 09913-84510

4) Apply oil to countershaft gear needle bearing, and then install needle bearing and 2nd gear.

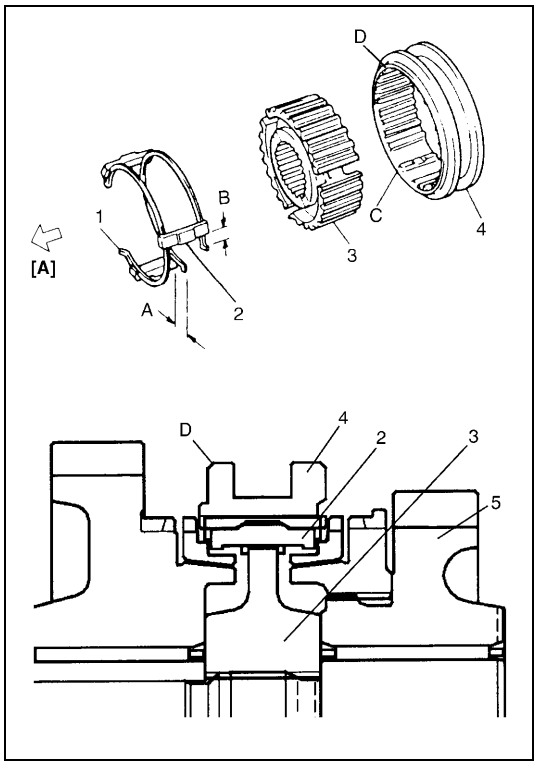

5) Assemble synchronizer sleeve (4) and hub (3) as follows.
   a) Fit low speed synchronizer sleeve to hub in specified direction as shown in figure.
   b) Insert 3 keys (2) to hub.
   c) Set springs (1) at specified position as shown in figure.

Synchronizer key installation position
: A = B

[A]:	1st gear side
C:	Key way
D:	Chamfered side
5.	2nd gear

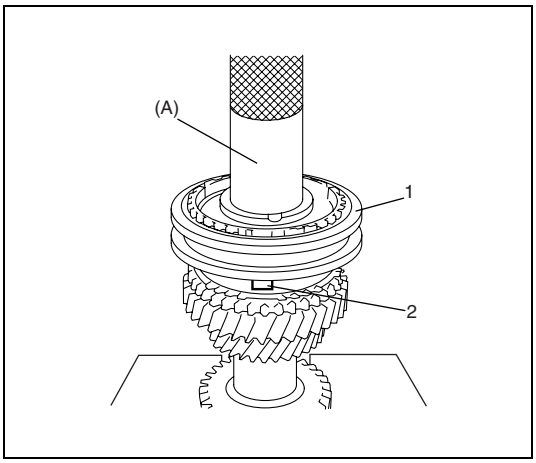

6) Drive in low speed synchronizer assembly (1) using special tool and hammer.

NOTE:

- **While press-fitting sleeve & hub, make sure that synchronizer ring key slots (2) are aligned with keys in sleeve & hub assembly.**
- **Check free rotation of 2nd gear after press-fitting sleeve & hub assembly.**

Special tool
(A): 09913-84510

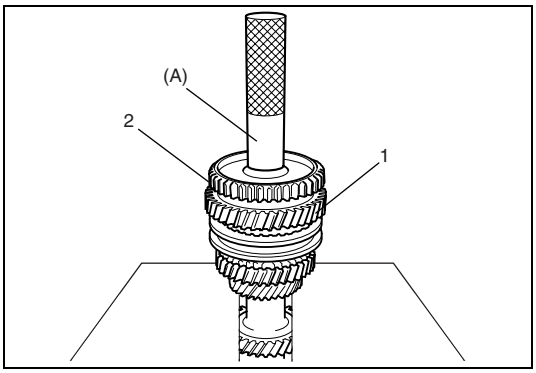

7) Install countershaft gear needle bearing, and then countershaft low needle bush, needle bearing and 1st gear (1) to countershaft.
8) Press-fit countershaft reverse gear (2) using special tool and hammer.

Special tool
(A): 09913-80113

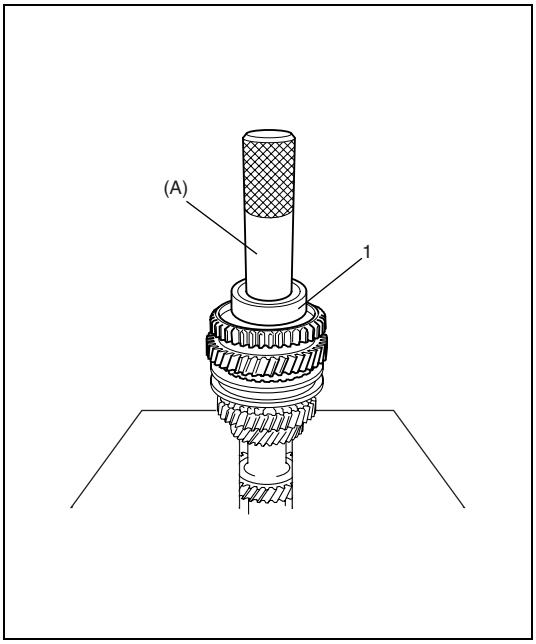

9) Press-fit countershaft front bearing (1) using special tool and hammer.

Special tool
(A): 09913-84510

10) Hold countershaft with vise through woodblock, tighten countershaft front bearing nut to specified torque.

Tightening torque
Countershaft front bearing nut
: 210 N·m (21.0 kg-m, 152.0 lb-ft)

CAUTION:
Do not hold spline, gear teeth or abrasived surface of shaft with vise, otherwise shaft may be damaged.

11) Caulk countershaft front bearing nut using caulking tool and hammer.

Countershaft Assembly Inspection

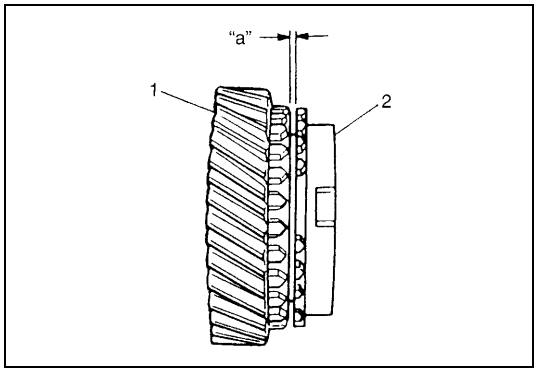

Check clearance "a" between ring (2) and gear (1), each chamfered teeth of gear, ring and sleeve, then determine parts replacement.

Clearance between synchronizer ring and gear
Standard "a": 1.0 – 1.4 mm (0.039 – 0.055 in.)
Service limit "a": 0.5 mm (0.019 in.)

Output Shaft Assembly Disassembly and Reassembly

Disassembly

1) Remove output shaft rear snap ring.

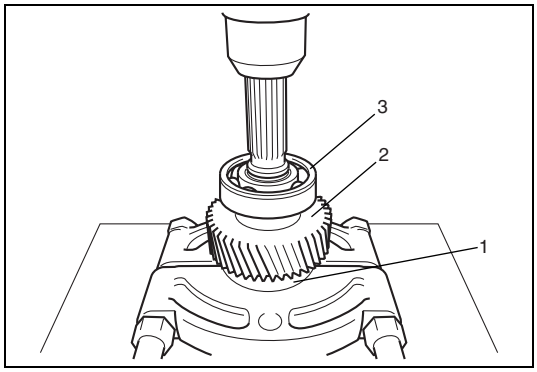

2) Apply bearing puller to output shaft front bearing (1), and drive out output shaft front bearing, output shaft gear (2) and output shaft rear bearing (3) all at once from output shaft using press.

Reassembly

1) Clean all components thoroughly, inspect them for any abnormality and replace with new ones as necessary.

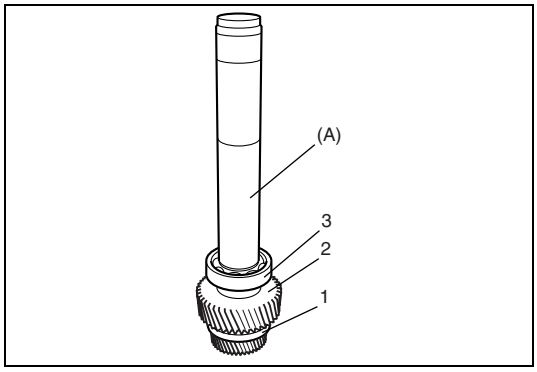

2) Drive in output shaft front bearing (1), output shaft gear (2) and output shaft rear bearing (3) using special tool and hammer.

Special tool
(A): 09940-51710

3) Install output shaft rear snap ring.

Output Shaft Assembly Inspection

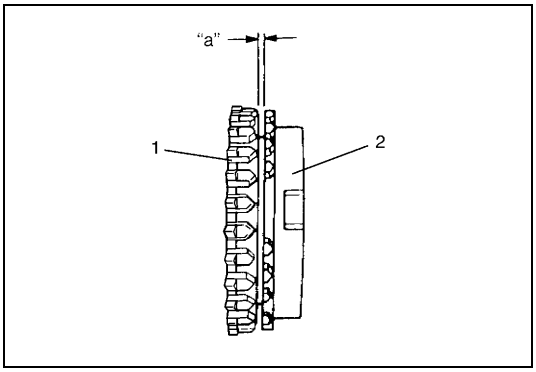

Check clearance "a" between ring (2) and output shaft (1), each chamfered teeth of gear, ring and sleeve, then determine parts replacement.

Clearance between synchronizer ring and output shaft
Standard "a": 1.0 – 1.4 mm (0.039 – 0.055 in.)
Service limit "a": 0.5 mm (0.019 in.)

Tightening Torque Specification

Fastening part	Tightening torque		
	N•m	kg-m	lb-ft
Transmission oil level / filler and drain plugs	23	2.3	17.0
Gear shift control boot cover bolt	23	2.3	17.0
Shift lever No.1 nut	23	2.3	17.0
Shift lever No.2 bolt	23	2.3	17.0
Back up lamp switch	23	2.3	17.0
Reverse shaft bolt	23	2.3	17.0
Gear shift locating bolt	23	2.3	17.0
Extension case bolt	23	2.3	17.0
Gear shift lever case bolt	23	2.3	17.0
5th gear shift inverse lever bolt	23	2.3	17.0
Input shaft 5th hub nut	210	21.0	152.0
Countershaft front bearing nut	210	21.0	152.0
Transmission to engine bolt	55	5.5	39.5
Gear shift control joint nut	3.5	0.35	2.5
Gear shift control boot plate nut	3.5	0.35	2.5
Gear shift stop bolt	23	2.3	17.0
Oil hole plug	23	2.3	17.0
Clutch operating cylinder bolt	50	5.0	36.0
Transmission hook bolt	23	2.3	17.0
CKP sensor bolt	8.5	0.85	6.0
Rear mounting bracket bolt	25	2.5	18.0
Rear mounting bracket nut	25	2.5	18.0
Rear mounting bolt	25	2.5	18.0
Transmission case bolt	23	2.3	17.0

Required Service Material

Material	Recommended SUZUKI product (Part Number)	Use
Lithium grease	SUZUKI SUPER GREASE A (99000-25010)	• Oil seal lips • Locating springs • Gear shift shaft balls • Gear shift control arm • Gear shift control shaft bush • Gear shift control joint washer • Gear shift control shaft
Sealant	SUZUKI BOND NO.1217G (99000-31260)	• Oil drain plug and filler / level plug • Mating surface of transmission front case • Mating surface of transmission rear case • Mating surface of gear shift lever case
Thread lock cement	THREAD LOCK 1322 (99000-32110)	• Reverse shaft bolt • 5th gear shift inverse lever bolt • Locating bolt • Gear shift stop bolt • Gear shift lever case bolt

Special Tool

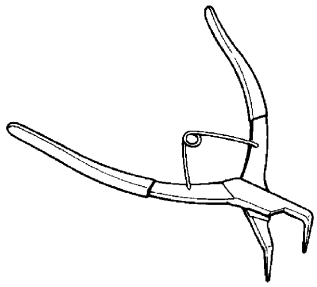 09900-06106 Snap ring remover	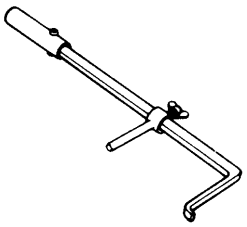 09913-50121-000 Oil seal remover	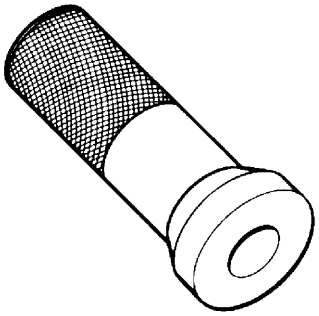 09913-76010-000 Differential bearing race installer	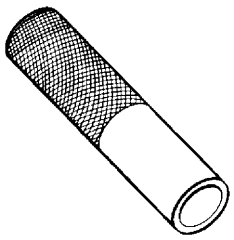 09913-80113 Bearing puller
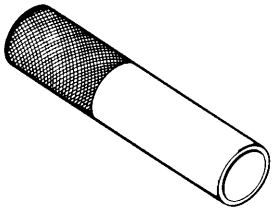 09913-84510 Bearing installer	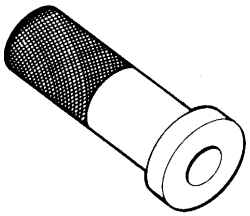 09913-85210-000 Bearing pulling holder	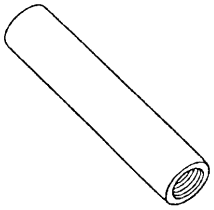 09923-46020 Joint pipe	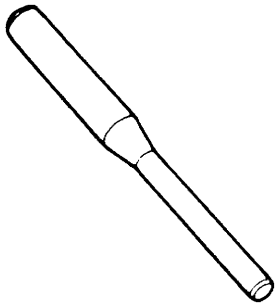 09925-78210 Spring pin remover 6 mm (0.24 in.)
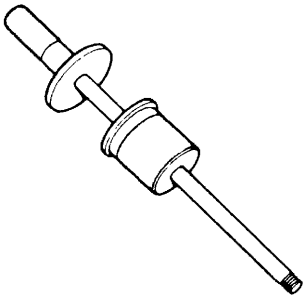 09930-30104 Sliding shaft	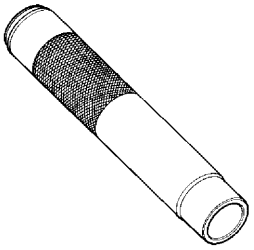 09940-51710-000 Bearing installer	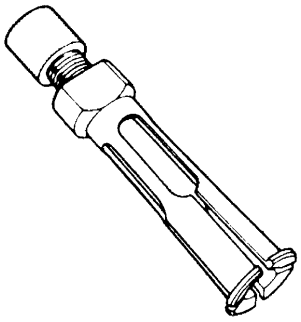 09941-64511 Bearing remover	

SECTION 7C2

CLUTCH

CONTENTS

General Description 7C2-2
Diagnosis 7C2-3
Diagnosis Table 7C2-3
Clutch Pedal Inspection 7C2-4
Clutch Fluid Level Check 7C2-4
On-Vehicle Service 7C2-5
Clutch Fluid Pipe and Hose Components .. 7C2-5
Clutch Fluid Pipe and Hose Removal and Installation 7C2-6
Clutch Fluid Pipe and Hose Inspection 7C2-7
Clutch Master Cylinder Removal and Installation 7C2-7
Clutch Operating Cylinder Removal and Installation 7C2-9
Unit Repair Overhaul 7C2-10
Clutch Master Cylinder Components..... 7C2-10
Clutch Master Cylinder Disassembly and Assembly..... 7C2-11
Clutch Master Cylinder Inspection 7C2-12
Clutch Operating Cylinder Components .. 7C2-12
Clutch Operating Cylinder Disassembly and Assembly 7C2-13
Clutch Operating Cylinder Inspection 7C2-14
Clutch Pedal and Clutch Pedal Bracket Components..... 7C2-14
Clutch Cover, Clutch Disc, Flywheel and Release Bearing Components 7C2-15
Clutch Cover, Clutch Disc, Flywheel and Release Bearing Removal and Installation..... 7C2-16
Clutch Cover, Clutch Disc, Flywheel and Release Bearing Inspection 7C2-18
Tightening Torque Specification 7C2-19
Required Service Material 7C2-19
Special Tool 7C2-19

General Description

The clutch is a diaphragm-spring clutch of a dry single disc type. The diaphragm spring is of a taperingfinger type, which is a solid ring in the outer diameter part, with a series of tapering fingers pointing inward. The disc, carrying four torsional coil springs, is slidably mounted on the transmission input shaft with a serration fit.

The clutch cover is secured to the flywheel, and carries the diaphragm spring in such a way that the peripheral edge of the spring pushes on the pressure plate against the flywheel with the disc in between, when the clutch release bearing is held back: This is the engaged condition of the clutch.

Depressing the clutch pedal causes the release bearing to advance and push on the tips of the tapering fingers of the diaphragm spring. When this happens, the diaphragm spring pulls the pressure plate away from the flywheel, thereby interrupting the flow of drive from flywheel through clutch disc to transmission input shaft.

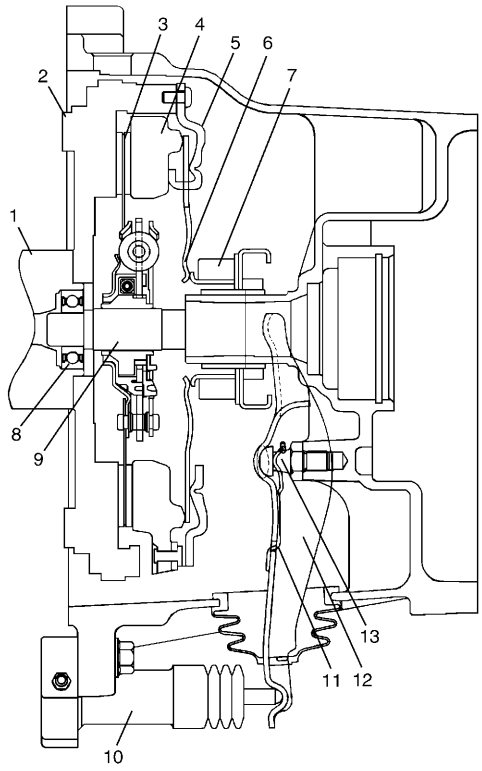

1. Crankshaft	6. Diaphragm spring	11. Clutch release fork clip
2. Flywheel	7. Release bearing	12. Release fork
3. Clutch disc	8. Input shaft bearing	13. Clutch release fork support
4. Pressure plate	9. Input shaft	
5. Clutch cover	10. Clutch operating cylinder	

Diagnosis

Diagnosis Table

Condition	Possible Cause	Correction
Slipping clutch	Improper clutch pedal free travel.	Replace clevis pin or clutch pedal arm.
	Worn or oily clutch disc facing.	Replace disc.
	Warped disc, pressure plate or flywheel surface.	Replace disc, clutch cover or flywheel.
	Weakened diaphragm spring.	Replace clutch cover.
	Master cylinder piston or seal cup not returning.	Repair master cylinder.
Dragging clutch	Improper clutch pedal free travel.	Replace clevis pin or clutch pedal arm.
	Weakened diaphragm spring, or worn spring tip.	Replace clutch cover.
	Rusted input shaft splines.	Lubricate.
	Damaged or worn splines of transaxle input shaft.	Replace input shaft.
	Excessively wobbly clutch disc.	Replace disc.
	Clutch facings broken or dirty with oil.	Replace disc.
	Fluid leakage.	Repair or replace.
Clutch vibration	Glazed (glass-like) clutch facings.	Repair or replace disc.
	Clutch facings dirty with oil.	Replace disc.
	Release bearing slides unsmoothly.	Lubricate.
	Wobbly clutch disc, or poor facing contact.	Replace disc.
	Weakened torsion springs in clutch disc.	Replace disc.
	Clutch disc rivets loose.	Replace disc.
	Distorted pressure plate or flywheel surface.	Replace clutch cover or flywheel.
	Weakened or loosened engine mounting bolt or nut.	Retighten or replace mounting.
Noisy clutch	Worn or broken release bearing.	Replace release bearing.
	Input shaft front bearing worn down.	Replace input shaft bearing.
	Excessive rattle of clutch disc hub.	Replace disc.
	Cracked clutch disc.	Replace disc.
	Pressure plate and diaphragm spring rattling.	Replace clutch cover.
Grabbing clutch	Clutch disc facings soaked with oil.	Replace disc.
	Clutch disc facings excessively worn.	Replace disc.
	Rivet heads showing out of facing.	Replace disc.
	Weakened torsion springs.	Replace disc.

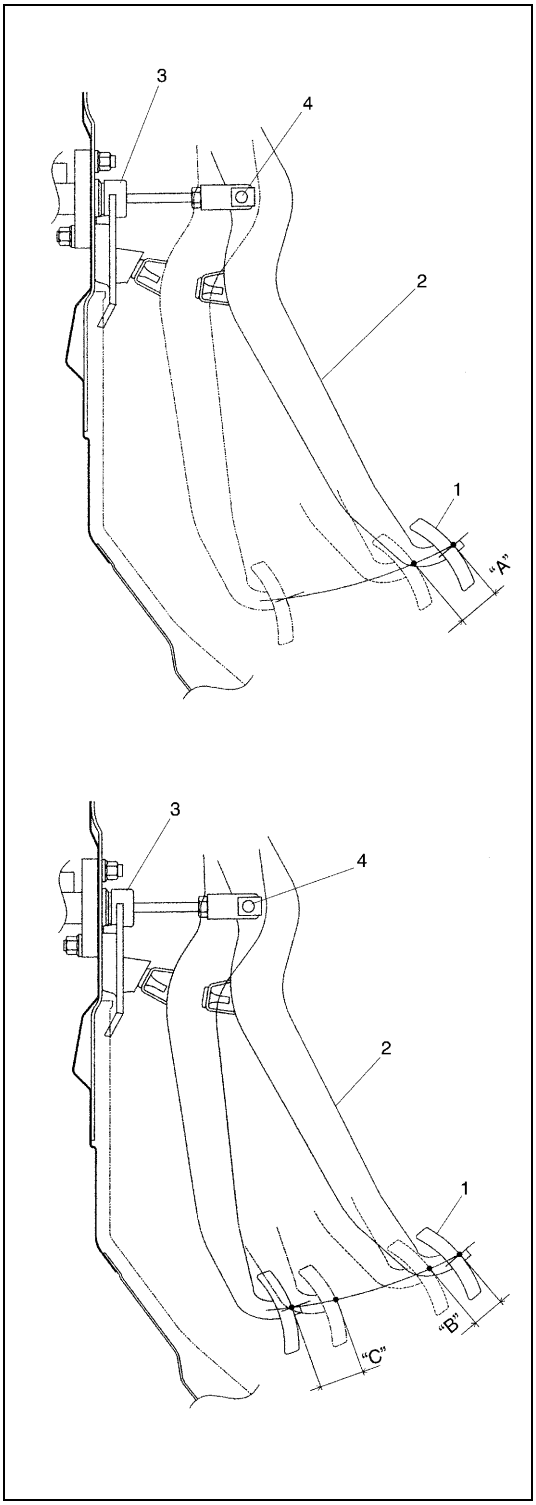

Clutch Pedal Inspection

Clutch pedal free travel "A"

1) Depress clutch pedal (1), stop the moment clutch resistance is felt, and measure how much pedal has moved (clutch pedal free travel) as represented by "A" in the figure. Then check its conformance to specification shown below.

Clutch pedal free travel
"A": 10 – 15 mm (0.39 – 0.59 in.)

2) If "A" is not within specification, check pedal arm (2) and master cylinder (3) and replace defective part.

Cylinder push rod play "B"

1) Press clutch pedal (1) gradually with finger, stop when slight increase of resistance is felt and measure how much pedal has moved (push rod play) as represented by "B" as shown. Then check its conformance to below specification.

Push rod play
"B": Max. 3 mm (0.12 in.)

2) If "B" is not within specification, replace clevis pin (4) or pedal arm (2).

Clutch release margin "C"

1) Pull up parking brake fully and block wheels.
2) Start engine and keep engine at idle with neutral gear position.
3) Without clutch pedal (1) depressed, be slow to shift the shift lever to reverse position until transaxle emits gear contact noise.
4) Be slow to depress clutch pedal (1), and at gear contact noise died position (release point (4)) stop depressing.
5) Measure distance between release point (4) and full stroke point (3) on clutch pedal (1) which is shown by "C" in the figure.

Clutch release margin
"C": 17 mm (0.67 in.) or more

6) If "C" is not within specification, it is possible that air is trapped in this system. If suspected so, bleed air.
   Upon completion of above inspection and adjustment, start engine and check clutch for proper operation.

Clutch Fluid Level Check

Refer to "Master Cylinder and Brake Fluid Level Check" in Section 5.

On-Vehicle Service

CAUTION:

- **Do not allow fluid to get on painted surface.**
- **Do not use shock absorber fluid or any other fluid which contains mineral oil. Do not use a container which has been used for mineral oil or a container which is wet from water. Mineral oil will cause swelling and distortion of rubber parts in hydraulic brake system and water mixed into brake fluid will lower fluid boiling point. Keep all fluid containers capped to prevent contamination.**

Clutch Fluid Pipe and Hose Components

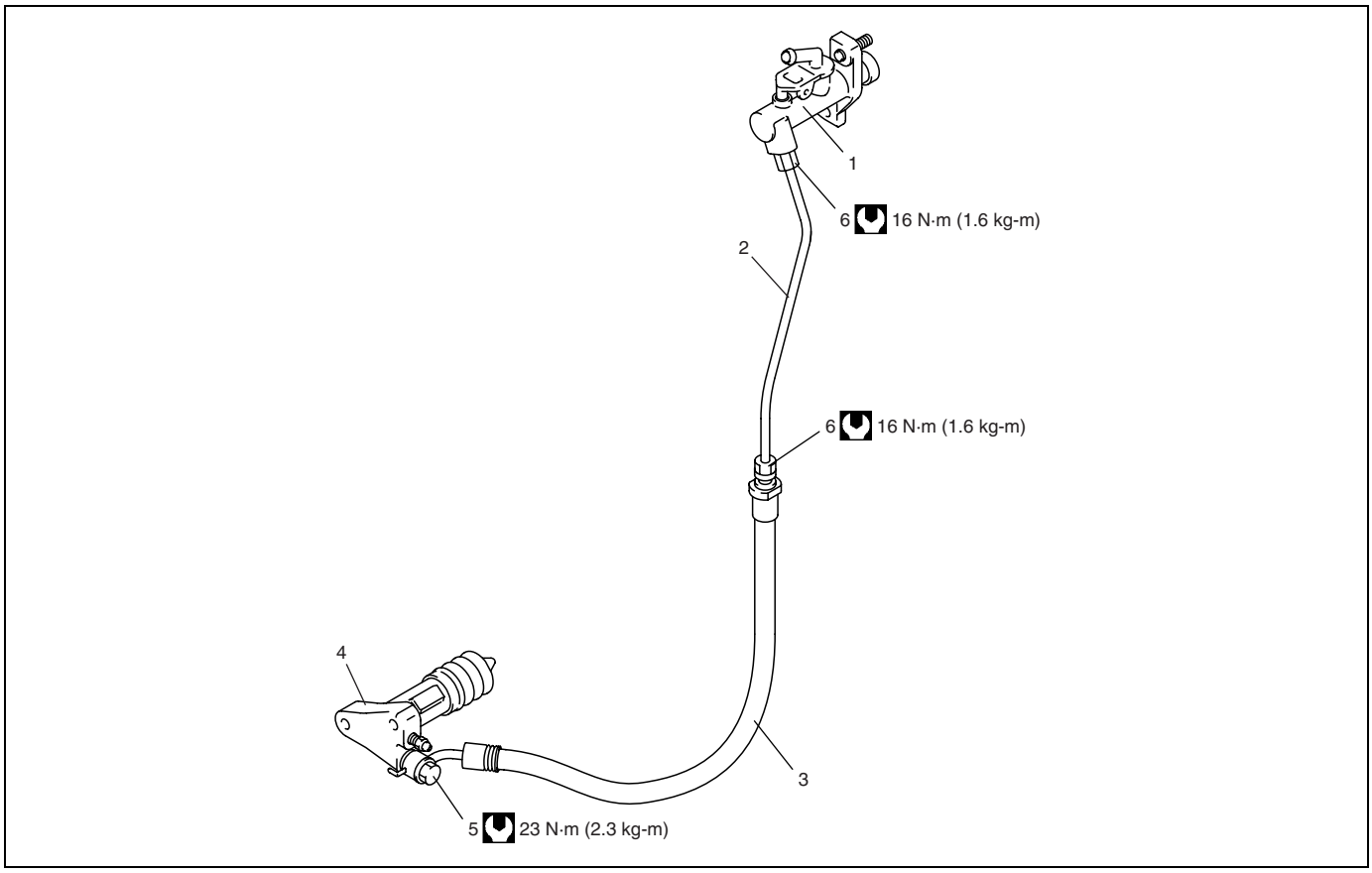

1. Clutch master cylinder	5. Union bolt
2. Pipe	6. Clutch pipe flare nut
3. Hose	Tightening torque
4. Clutch operating cylinder	

Clutch Fluid Pipe and Hose Removal and Installation

Removal

1) Remove dust and dirt from each joint of hose and pipe to be disconnected and clean around reservoir cap.
2) Take out fluid with syringe or such from brake master cylinder reservoir.

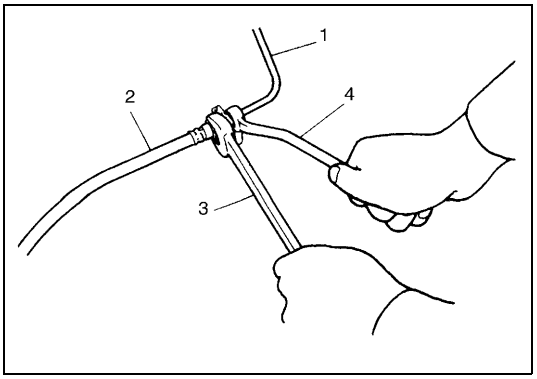

3) Disconnect fluid pipe (1) from hose (2).

NOTE:

To disconnect pipe (1) from hose (2), separate them by using flare nut wrench (4) and spanner (3) so as not to kink them.

Installation

Reverse removal procedure for installation, noting the following instruction.

CAUTION:

Do not allow pipe and hose to contact hard against vehicle body or other parts.

- Install each clamp securely.
- For installation angle of hose, refer to “Clutch Fluid Pipe and Hose Components” in this section.

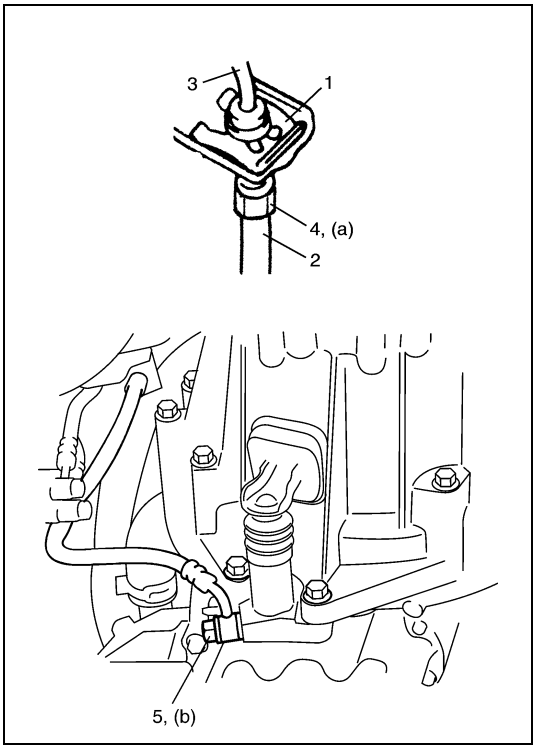

- Install E-ring securely as shown.
- Tighten clutch pipe flare nut (4) by using flare nut wrench and back up wrench.
- Tighten union bolt (5).

Tightening torque

Clutch pipe flare nut (a): 16 N·m (1.6 kg-m, 11.5 lb-ft)
Union bolt (b): 23 N·m (2.3 kg-m, 17.0 lb-ft)

- After installation, bleed air from system. (Refer to “Air Bleeding of Brake System” in Section 5.)
- Check fluid leakage.
- Add fluid to MAX level of reservoir.

1.	E-ring
2.	Hose
3.	Pipe

Clutch Fluid Pipe and Hose Inspection

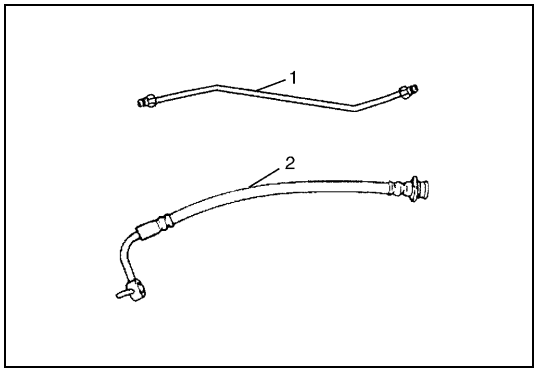

Check pipe (1) and hose (2) for dent, kink, crack, dirt and dust. Replace if check result is not satisfactory.

Clutch Master Cylinder Removal and Installation

Removal

1) Clean around reservoir cap and take out fluid with syringe or such from brake master cylinder reservoir.

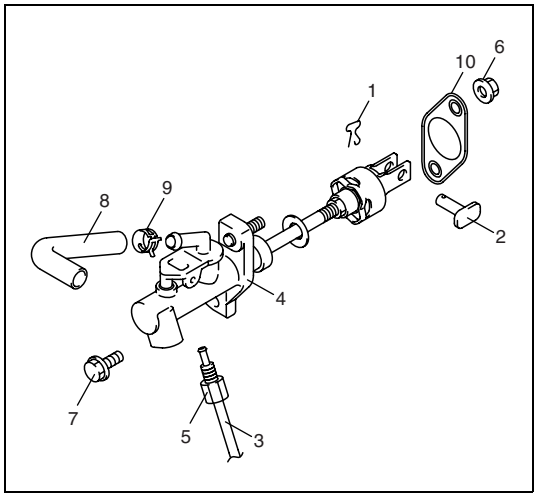

2) Remove clevis master cylinder clip (1) and master cylinder pin (2).
3) Disconnect clutch reservoir hose (8).
4) Disconnect fluid pipe (3) from master cylinder assembly (4) by loosing flare nut (5).
5) Remove master cylinder nut (6) and bolt (7).
6) Remove master cylinder assembly (4) and gasket (10).

9. Clamp

Installation

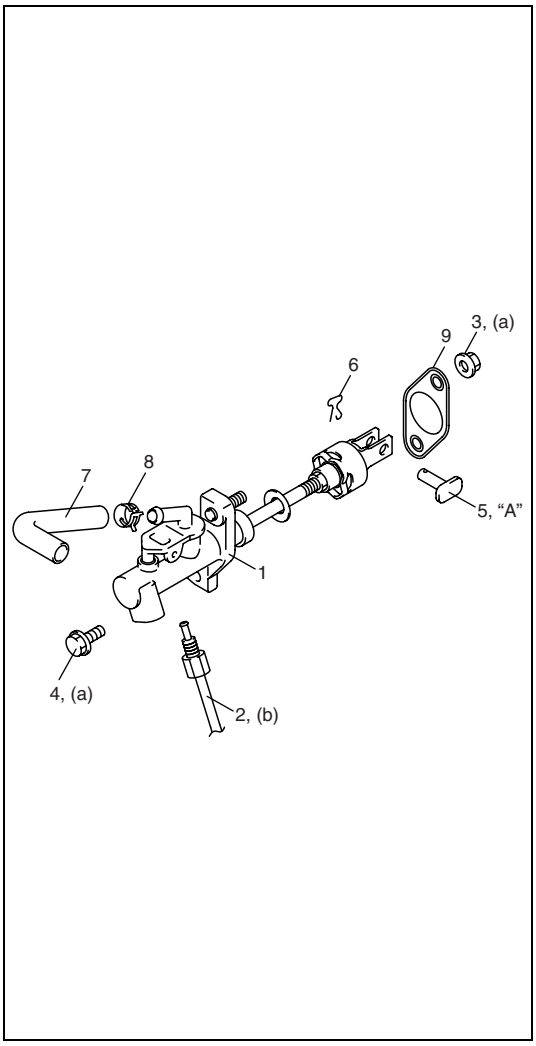

1) Install master cylinder assembly (1) and new gasket (9) to dash panel.

NOTE:

Do not reuse gasket.

2) Tighten master cylinder nut (3) and bolt (4) to specified torque.

Tightening torque

Clutch master cylinder nut and bolt

(a): 13 N·m (1.3 kg-m, 9.5 lb-ft)

3) Connect fluid pipe and tighten flare nut (2) to specified torque.

Tightening torque

Clutch pipe flare nut

(b): 16 N·m (1.6 kg-m, 11.5 lb-ft)

4) Connect clutch reservoir hose (7).
5) Apply grease to master cylinder pin (5) and install master cylinder pin.

"A": Grease 99000-25010

6) Install master cylinder clip (6).
7) Fill brake master cylinder reservoir with specified brake fluid and check fluid leakage.

8. Clamp

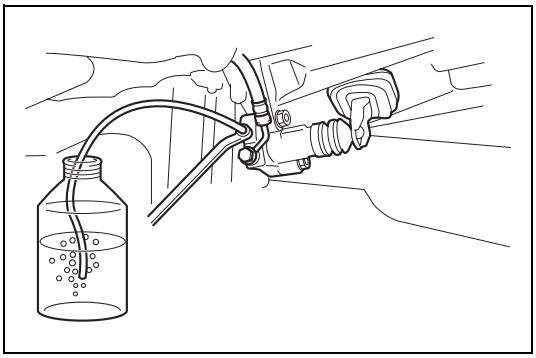

8) For procedure of air bleeding, refer to "Air Bleeding of Brake System" in Section 5.
9) Check clutch pedal free travel and clutch release margin. (Refer to "Clutch Pedal Inspection" in this section.)

Clutch Operating Cylinder Removal and Installation

Removal

1) Clean around master cylinder reservoir cap and take out fluid with syringe or such from brake master cylinder reservoir.

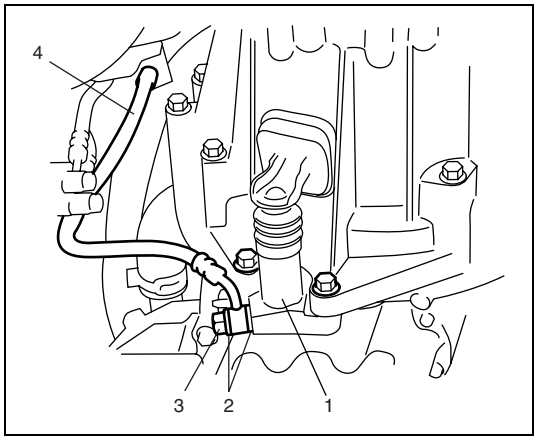

2) Disconnect fluid hose (4) from clutch operating cylinder by loosing union bolt (3).
3) Remove clutch operating cylinder assembly (1).

2. Gasket

Installation

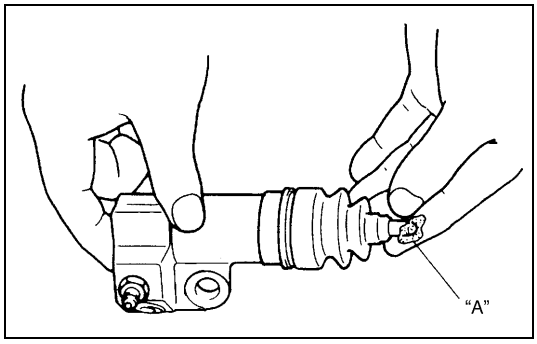

1) Apply small amount of grease to rod tip.

NOTE:

Do not allow any grease to be on boot.

"A": Grease 99000-25010

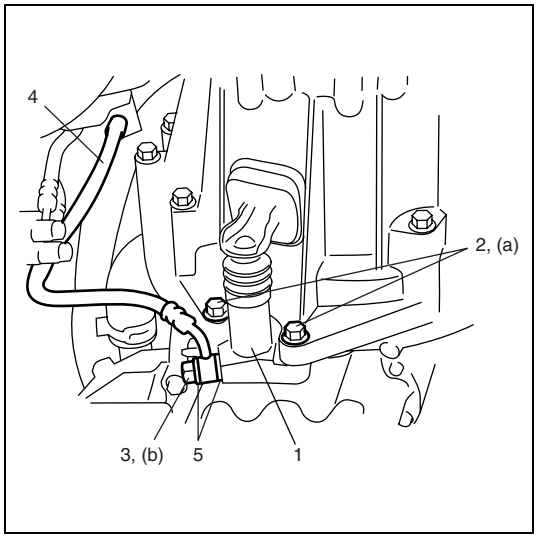

2) Install clutch operating cylinder assembly (1) and tighten clutch operating cylinder bolts (2) to specified torque.

Tightening torque

Clutch operating cylinder bolt
(a): 50 N·m (5.0 kg-m, 36.5 lb-ft)

3) Connect clutch fluid hose (4) and tighten union bolt (3) to specified torque.

Tightening torque

Union bolt (b): 23 N·m (2.3 kg-m, 17.0 lb-ft)

NOTE:

Do not reuse gaskets (5).

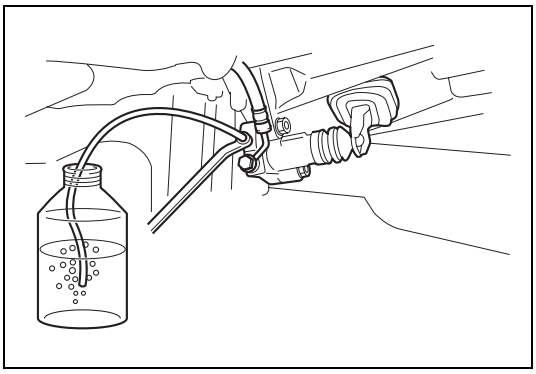

4) Fill brake master cylinder reservoir with specified brake fluid and check for fluid leakage.
5) For procedure of air bleeding, refer to “Air Bleeding of Brake System” in Section 5.
6) Check clutch pedal free travel and clutch release margin. (Refer to “Clutch Pedal Inspection” in this section.)

Unit Repair Overhaul

Clutch Master Cylinder Components

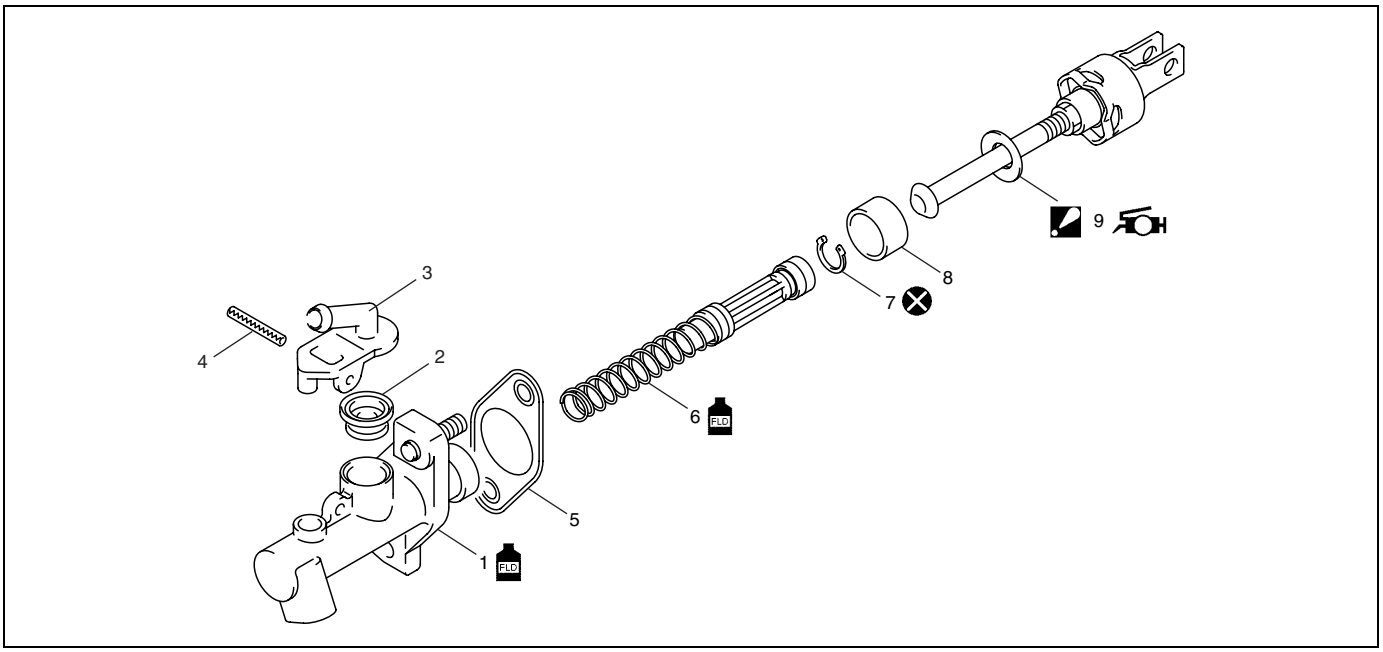

1. Cylinder	4. Spring pin	7. Circlip	Do not reuse.
2. Reservoir seal	5. Seat gasket	8. Boot	Apply brake fluid.
3. Nipple	6. Piston assembly	9. Push rod assembly : Apply grease 99000-25100 to spheral end of push rod. : Never disassemble.	

Clutch Master Cylinder Disassembly and Assembly

Disassembly

CAUTION:
Never disassemble push rod assembly, disassembling will affect original performance of clutch system.

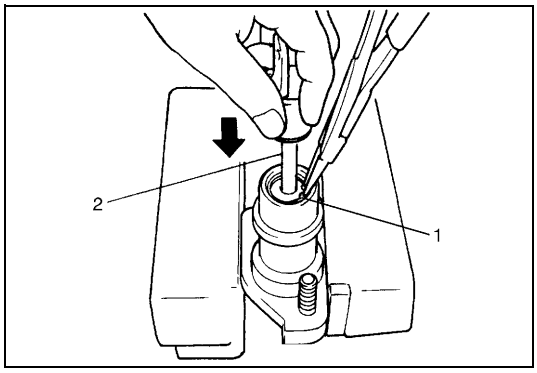

1) Remove circlip (1) with push rod (2) pushed in.

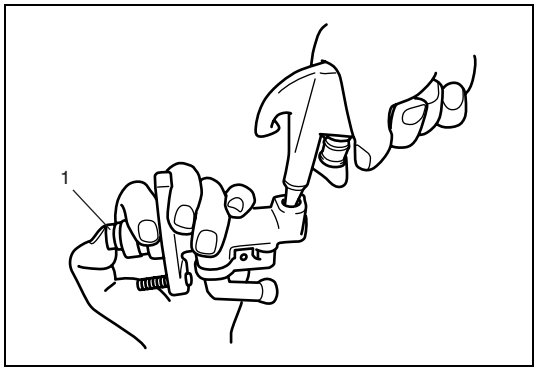

2) Blow compressed air gradually into hole for pipe connection to remove piston assembly (1), using care to prevent it from jumping out.

Reassembly

NOTE:
Before installation, wash each part in specified brake fluid.

1) Perform “Clutch Master Cylinder Inspection” in this section.
2) Apply brake fluid to piston assembly and inside of cylinder body.
3) Install piston assembly into cylinder.

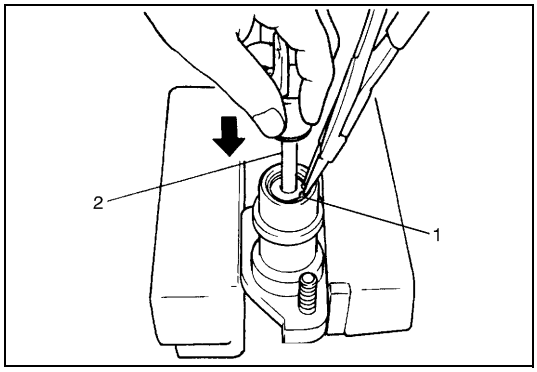

4) Apply grease to spheral end of push rod, and then install circlip (1) with push rod (2) pushed in.

: Grease 99000-25100

Clutch Master Cylinder Inspection

Inspect all disassembled parts for wear or damage, and replace parts if necessary.

NOTE:

- **Wash disassembled parts with brake fluid.**
- **Do not reuse piston assembly and circlip.**

Inspect cylinder bore for scoring or corrosion.
It is best to replace corroded cylinder. Corrosion can be identified as pits or excessive roughness.

NOTE:

- **Polishing bore of cylinder with cast aluminum body with anything abrasive is prohibited, as damage to cylinder bore may occur.**
- **Do not use a cloth to dry cylinder, as lint from cloth cannot be kept away from cylinder bore surfaces.**

Rinse cylinder in clean brake fluid. Shake excess rinsing fluid from cylinder.

Clutch Operating Cylinder Components

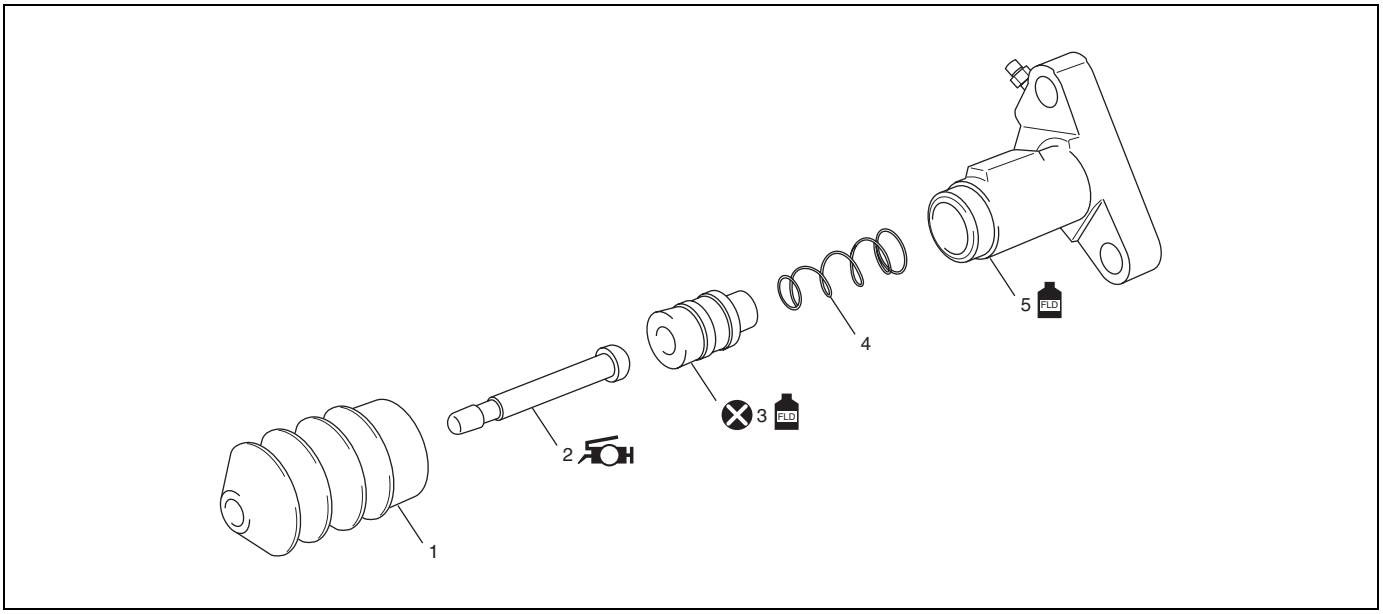

	1. Boot	4. Return spring	FLD Apply brake fluid.
	2. Push rod : Apply grease 99000-25100 to piston side spheral end of push rod.	5. Cylinder	
	3. Piston assembly	Do not reuse.	

Clutch Operating Cylinder Disassembly and Assembly

Disassembly

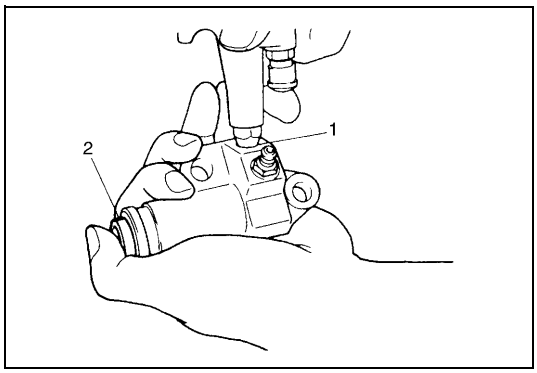

1) Remove boot and then push rod.
2) Remove piston (2) by blowing compressed air into bolt hole (1) where hose was connected, using care to prevent it from jumping out.

Reassembly

NOTE:

Before installation, wash each part in specified brake fluid.

1) Perform “Clutch Operating Cylinder Inspection” in this section.
2) Apply brake fluid to piston assembly and inside of cylinder.

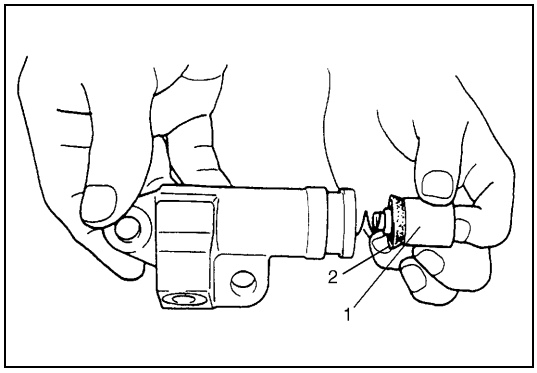

3) Install piston assembly (1) into cylinder. When inserting it, be careful not to cause damage to lip of piston cup (2).
4) Apply grease to piston side spheral end of push rod, and then install boot and push rod.

: Grease 99000-25100

Clutch Operating Cylinder Inspection

Inspect all disassembled parts for wear or damage, and replace parts if necessary.

NOTE:

- **Wash disassembled parts with brake fluid.**
- **Do not reuse piston assembly.**

Inspect cylinder bore for scoring or corrosion.
It is best to replace corroded cylinder. Corrosion can be identified as pits or excessive roughness.

NOTE:

- **Polishing bore of cylinder with anything abrasive is prohibited, as damage to cylinder bore may occur.**
- **Do not use a cloth to dry cylinder, as lint from cloth cannot be kept away from cylinder bore surfaces.**

Rinse cylinder in clean brake fluid. Shake excess rinsing fluid from cylinder.

Clutch Pedal and Clutch Pedal Bracket Components

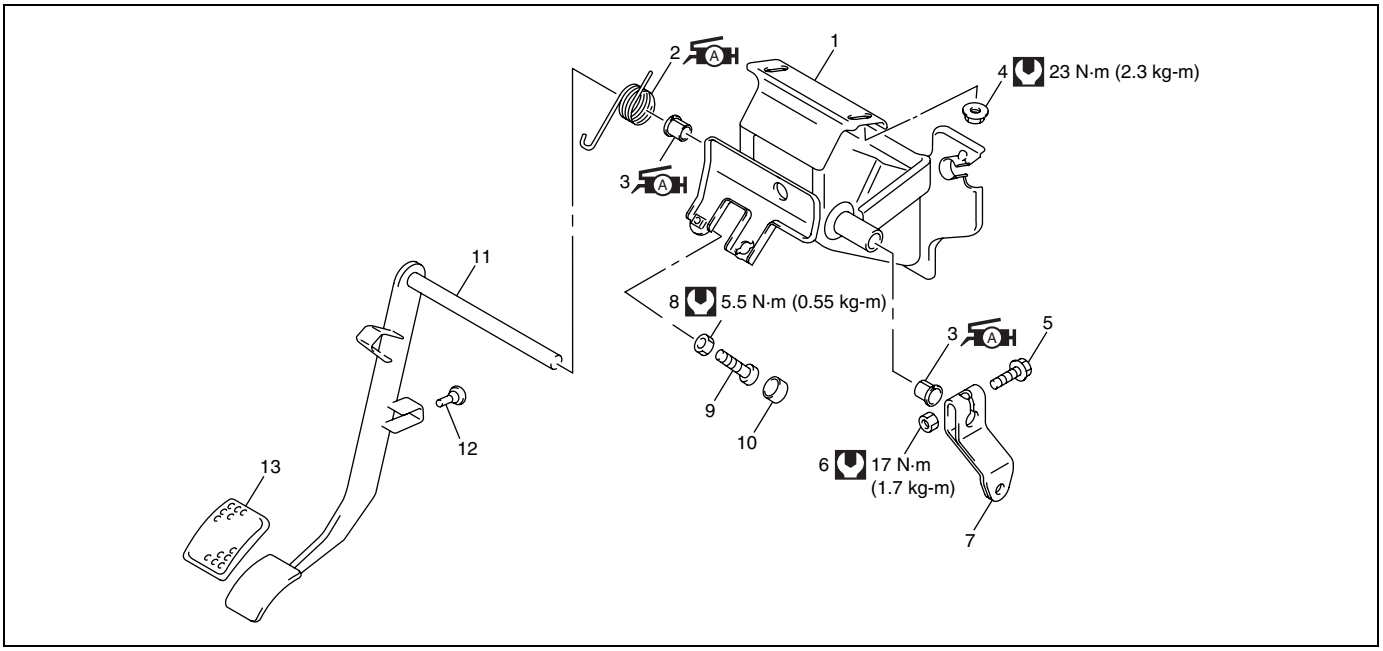

	1.	Pedal bracket	6.	Clutch pedal shaft arm nut	11. Clutch pedal
A H	2.	Clutch pedal spring : Apply grease 99000-25010 to spring inside.	7.	Clutch pedal lever	12. Clutch pedal stop cushion
A H	3.	Clutch bush : Apply grease 99000-25010 to bush all surface.	8.	Clutch pedal free height nut	13. Pedal pad
	4.	Bracket nut	9.	Clutch pedal free height bolt	Tightening torque
	5.	Clutch pedal shaft arm bolt	10	Clutch pedal return cushion	

Clutch Cover, Clutch Disc, Flywheel and Release Bearing Components

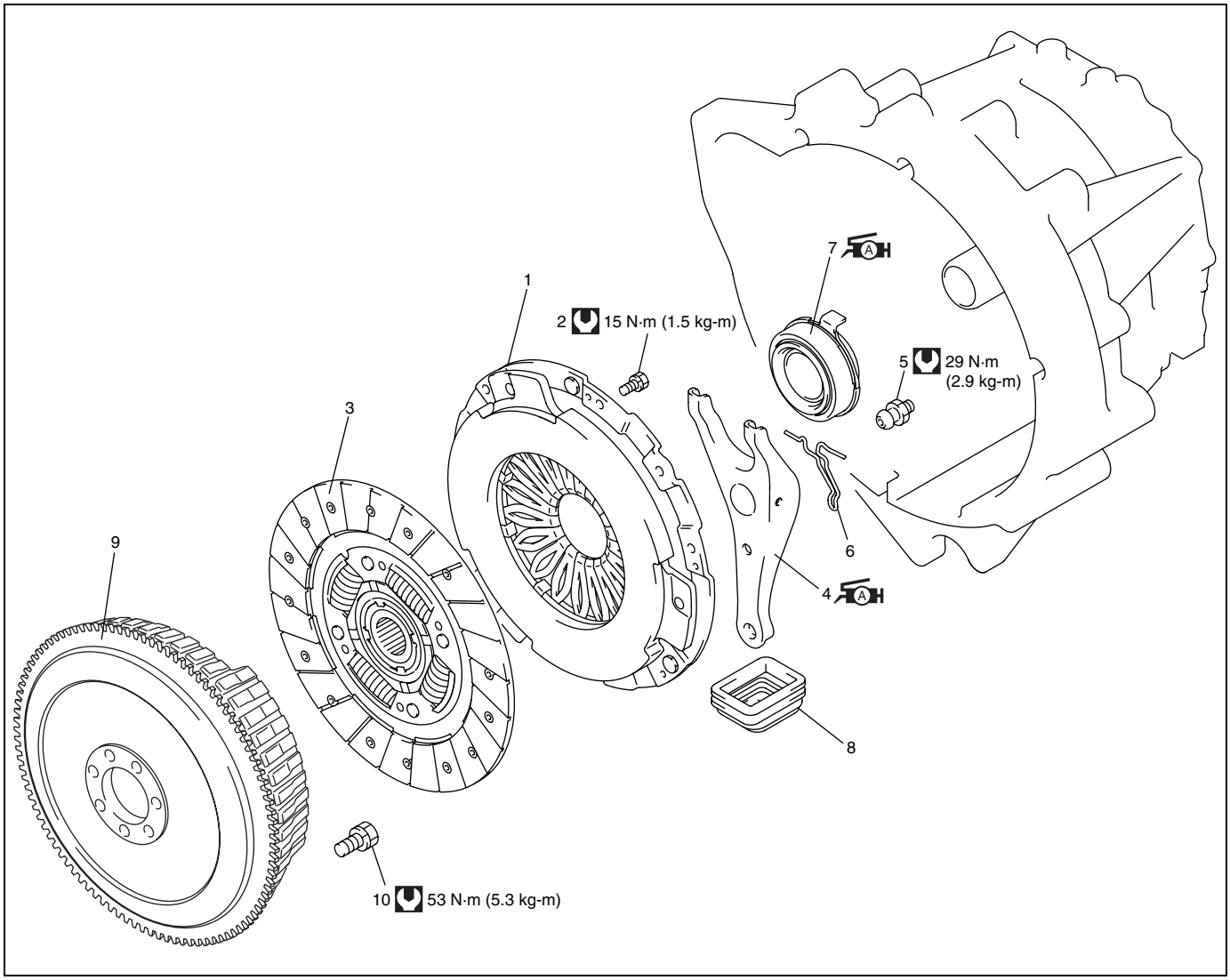

1. Clutch cover	5. Clutch release fork support	Tightening torque
2. Clutch cover bolt	6. Clutch release fork clip	9. Flywheel
3. Clutch disc	7. Release bearing : Apply grease 99000-25010 to release bearing inner surface.	10. Flywheel bolt
4. Release fork : Apply grease 99000-25010 to contact part with clutch release bearing and contact part with clutch release fork support.	8. Clutch release fork boot	

Clutch Cover, Clutch Disc, Flywheel and Release Bearing Removal and Installation

Removal

1) Dismount transmission assembly referring to “Transmission Unit Dismounting and Remounting” in Section 7A2.

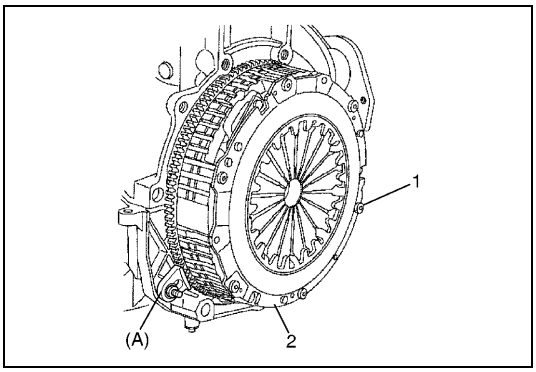

2) Hold flywheel with special tool and remove clutch cover bolts (1) and take off clutch cover (2) and disc.

Special tool
(A): 09916-98110

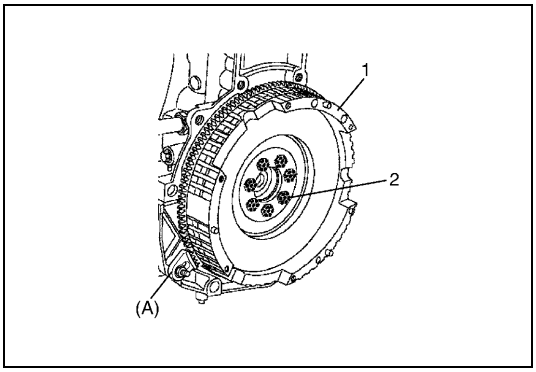

3) Hold flywheel (1) with special tool and remove flywheel bolts (2) and take off flywheel.

Special tool
(A): 09916-98110

4) Remove input shaft bearing from crankshaft by hand, if necessary.

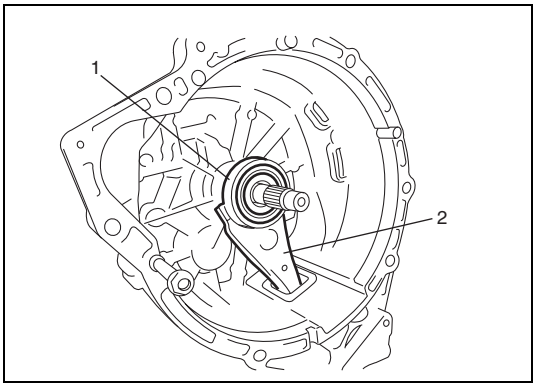

5) Remove release bearing (1) and clutch release fork (2).

Installation

NOTE:

Before assembling, make sure that flywheel surface and pressure plate surface have been cleaned and dried thoroughly.

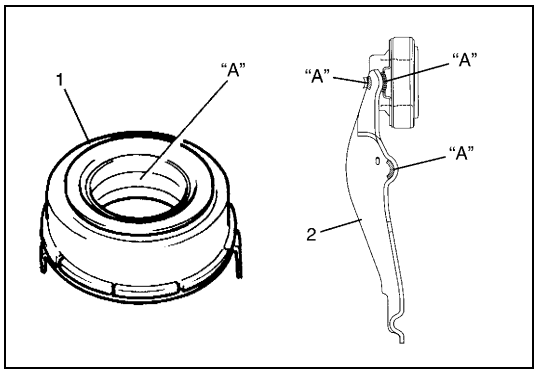

1) Apply grease to release bearing (1) inner surface and release fork (2).

"A": Grease 99000-25010

2) Install input shaft bearing to crankshaft.

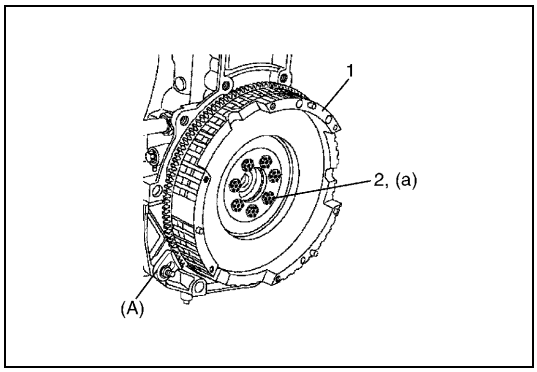

3) Install flywheel (1) to crankshaft and tighten bolts (2) to specified torque.

Special tool
(A): 09916-98110

Tightening torque
Flywheel bolt
(a): 53 N·m (5.3 kg-m, 38.5 lb-ft)

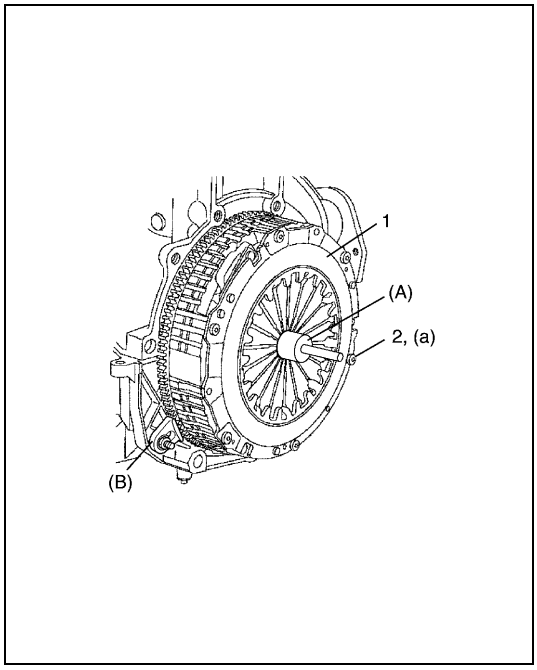

4) Using special tool, install clutch disc and clutch cover (1). Tighten clutch cover bolts (2) to specification using special tool.

NOTE:

- **While tightening clutch cover bolts, compress clutch disc with special tool (A) by hand so that disc centered.**
- **Tighten cover bolts little by little evenly in diagonal order.**

Special tool
(A): 09923-36320
(B): 09916-98110

Tightening torque
Clutch cover bolt
(a): 15 N·m (1.5 kg-m, 11.0 lb-ft)

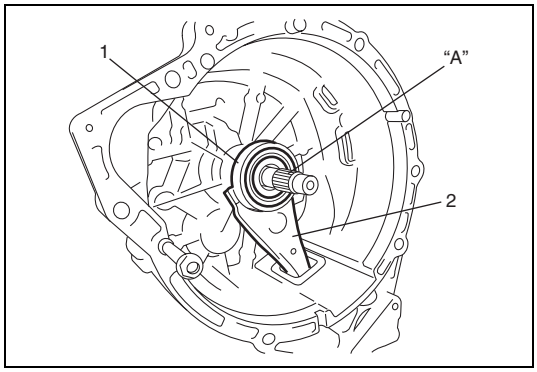

5) Install release bearing (1) and clutch release fork (2).
6) Slightly apply grease to input shaft. Then join transmission with engine. Refer to "Transmission Unit Dismounting and Remounting" in Section 7A2.

"A": Grease 99000-25210

Clutch Cover, Clutch Disc, Flywheel and Release Bearing Inspection

Input shaft bearing

Check bearing for smooth rotation and replace it if abnormality is found.

Clutch disc

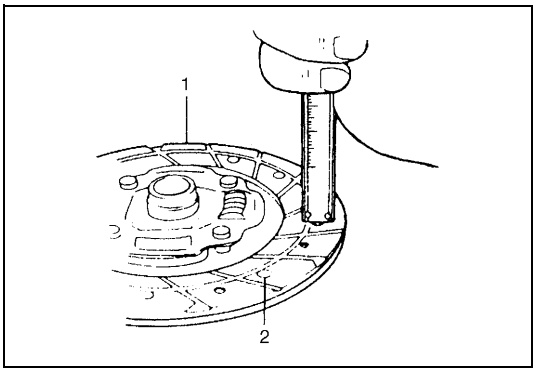

Measure depth of rivet head depression, i.e. distance between rivet head and facing surface.
If depression is found to have reached service limit at any of rivet holes (2), replace clutch disc assembly (1).

Rivet head depth
Standard: 1.4 mm (0.055 in.)
Limit: 0.3 mm or less (0.012 in. or less)

Clutch cover

1) Check diaphragm spring for abnormal wear or damage.
2) Inspect pressure plate for wear or heat spots.
3) If abnormality is found, replace it as assembly.
   Do not disassemble it into diaphragm and pressure plate.

Flywheel

Check surface contacting clutch disc for abnormal wear or heat spots. Replace or repair as required.

Release bearing

1) Check clutch release bearing for smooth rotation.
2) Inspect smoothness of release bearing retaining portion of transaxle case and correct or replace right case as necessary.

CAUTION:
Do not wash release bearing. Washing may cause grease leakage and consequential bearing damage.

Tightening Torque Specification

Fastening part	Tightening torque		
	N•m	kg-m	lb-ft
Flywheel bolt	53	5.3	38.5
Clutch cover bolt	15	1.5	11.0
Clutch pipe flare nut	16	1.6	11.5
Union bolt	23	2.3	17.0
Clutch master cylinder nut and bolt	13	1.3	9.5
Clutch pipe flare nut	16	1.6	11.5
Clutch operating cylinder bolt	50	5.0	36.5
Pedal bracket nut	23	2.3	17.0
Clutch pedal shaft arm nut	17	1.7	12.5
Brake master cylinder nut	13	1.3	9.5
Bracket nut	23	2.3	17.0
Clutch pedal free height nut	5.5	0.55	4.0

Required Service Material

Material	Recommended SUZUKI product (Part Number)	Use
Lithium grease	SUZUKI SUPER GREASE A (99000-25010)	• Clutch operating cylinder. • Master cylinder pin. • Release fork. • Inside of release bearing.
	SUZUKI SUPER GREASE I (99000-25210)	• Input shaft spline.

Special Tool

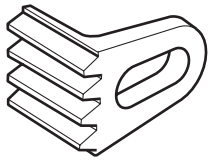	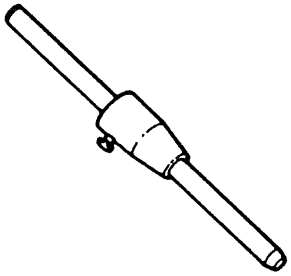
09916-98110 (Mot. 582-01) Flywheel locking tool.	09923-36320 Clutch center guide

SECTION 7D2

TRANSFER

CONTENTS

General Description 7D2-2
Transfer Cross Selection Diagram 7D2-2
Transfer Description 7D2-3
Gear Shift Control System Operation 7D2-3
Diagnosis 7D2-4
Transfer Diagnosis 7D2-4
On-Vehicle Service 7D2-5
Transfer Gear Oil Change 7D2-5
4WD Switch Removal and Installation 7D2-5
4WD Switch Inspection 7D2-6
VSS Removal and Installation 7D2-6
Transfer Assembly Mounting Components 7D2-7
Transfer Assembly Dismounting and Remounting 7D2-8
Unit Repair Overhaul 7D2-10
Transfer Unit Components 7D2-10
Transfer Case Component 7D2-10
Transfer Gear Component 7D2-11
Transfer Shift Shaft Component 7D2-12
Transfer Shift Lever Component 7D2-13
Transfer Unit Disassembly and Reassembly 7D2-14
Transfer Inspection 7D2-25
Front Case Assembly Disassembly and Reassembly 7D2-26
Rear Case Assembly Disassembly and Reassembly 7D2-28
Transfer Input Shaft Assembly Disassembly and Reassembly 7D2-29
Transfer Counter Gear Assembly Disassembly and Reassembly 7D2-30
Reduction Shift Shaft Assembly Disassembly and Reassembly 7D2-30
Reduction Shift Shaft Assembly Inspection 7D2-31
Front Drive Shift Shaft Assembly Disassembly and Reassembly 7D2-31
Front Drive Shift Shaft Assembly Inspection 7D2-31
Transfer Output Rear Shaft Assembly Disassembly and Reassembly 7D2-32
Transfer Output Front Shaft Assembly Disassembly and Reassembly 7D2-33
Output Shaft Snap Ring Adjustment 7D2-34
Tightening Torque Specification 7D2-35
Required Service Material 7D2-35
Special Tool 7D2-36

General Description

Transfer Cross Selection Diagram

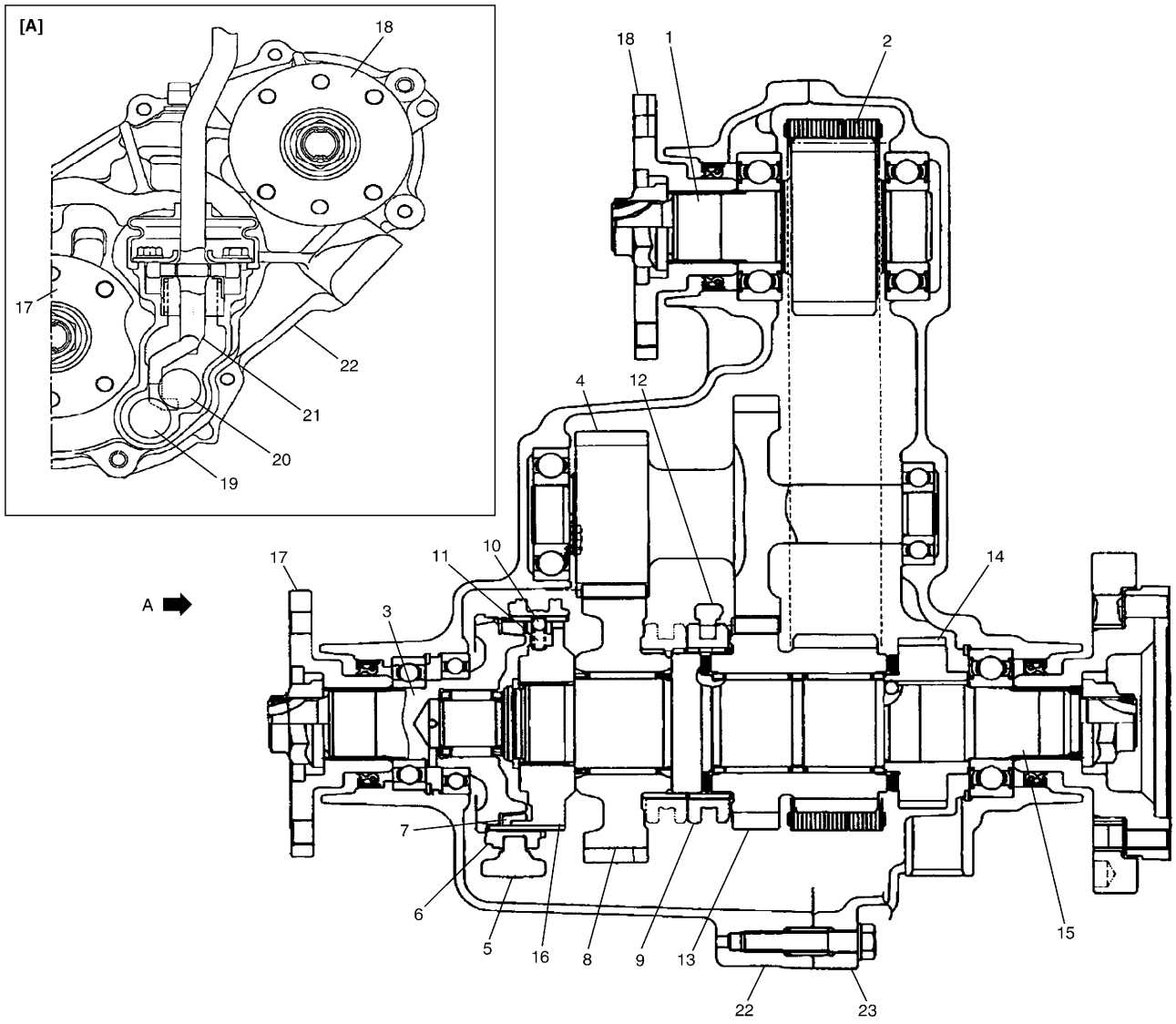

[A]: View A	8. Output low gear	16. Front drive clutch hub
1. Input shaft	9. Reduction clutch sleeve	17. Output front flange (without dynamic damper)
2. Drive chain	10. Steel ball	18. Input front flange (without dynamic damper)
3. Output front shaft	11. Key spring	19. Reduction shift shaft
4. Counter gear	12. High & low shift fork	20. Front drive shift shaft
5. Front drive gear shift fork	13. Sprocket output gear	21. Shift control lever
6. Front drive clutch hub sleeve	14. VSS rotor	22. Front case
7. Synchronizer ring	15. Output rear shaft	23. Rear case

Transfer Description

The aluminum transfer case directly connected to the back of the transmission contains an input shaft, counter gear, output rear shaft, output front shaft, drive chain, reduction shift shaft, high & low shift shaft and their accompanying gears, hubs, sleeves, synchronizer ring, fork, etc.

The transfer has such a selective mechanism as to enable the shift control lever to make the following selections.

- 2WD (high speed only) or 4WD (high or low speed)
- High speed (direct connection) or low speed (speed reduction by counter gear)

With a synchronizer installed to the front drive clutch hub sleeve, it is possible to change the shift position between the 2H (2WD high) position and the 4H (4WD high) position even while running.
The front drive gear shift fork has the shift fork spring to make a smooth shift from the 4H (4WD high) position to the 2H (2WD high) position.
The case has an oil receiver and a oil protect plate to provide proper lubrication even under the strict conditions of use.

Gear Shift Control System Operation

2H (2WD High) Position

The driving force from the input shaft is transmitted to the sprocket output gear through the drive chain. As the sprocket output gear and the rear output shaft are engaged via reduction clutch sleeve. At this time, the driving force transmitted from the input shaft rotates the transfer rear output shaft at the same speed as the input shift shaft.
On the other hand, as the rear output shaft and the front output shaft are not engaged with the front drive clutch hub sleeve, the driving force is not transmitted to the front output shaft.

4H (4WD High) Position

When the transfer shift control lever is shifted from the 2H position to the 4H position, the front drive shift shaft shifts the front drive gear shift fork, and the front drive clutch hub and the output front shaft are engaged via front drive clutch hub sleeve.
At this time, the driving force from the output rear shaft is transmitted to the transfer front output shaft.
The driving force from the input shaft is transmitted to the output rear shaft, as in the case of 2H (2WD high) position.

4L (4WD Low) Position

When the transfer shift control lever is shifted from the 4H position to the 4L position by pushing it down, the reduction shift shaft shifts high & low shift fork, and the output low gear and the output rear shaft are engaged via reduction clutch sleeve.
At this time, the driving force from the input shaft is transmitted to the output rear shaft and the output front shaft through the counter gear with the speed reduced.

Diagnosis

Transfer Diagnosis

Condition	Possible Cause	Correction
Gear slipping out of mesh	• Worn shift fork shaft	Replace.
	• Worn shift fork or sleeve	Replace.
	• Weak or damaged locating spring	Replace.
	• Worn bearings on input shaft or output shaft	Replace.
	• Worn chamfered tooth on sleeve or gear	Replace sleeve and gear.
	• Worn synchronizer ring	Replace.
Gears refusing to disengage	• Distorted shift shaft or shift fork	Replace.
	• Weakened or broken synchronizer spring	Replace.
Hard shifting	• Inadequate or insufficient lubricant	Replenish.
	• Worn chamfered tooth on sleeve or gear	Replace sleeve and gear.
	• Distorted shift shaft	Replace.
Noise	• Inadequate or insufficient lubricant	Replenish.
	• Damaged or worn bearing (s)	Replace.
	• Damaged or worn gear (s)	Replace.
	• Damaged or worn chamfered tooth on sleeve or gear	Replace.

On-Vehicle Service

Transfer Gear Oil Change

1) Before changing or inspecting oil, be sure to stop engine and lift vehicle horizontally.
2) With vehicle lifted up, check oil level and leakage. If leakage exists, correct or repair it.

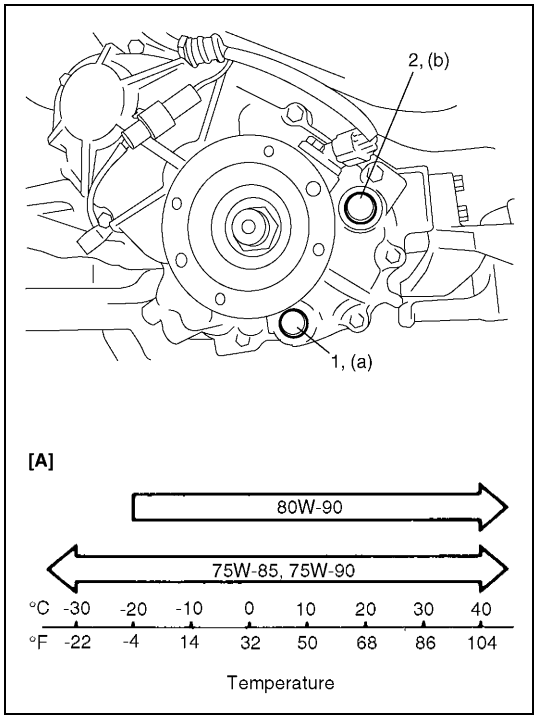

3) Drain old oil, tighten new drain plug (1) to specified torque and fill new specified oil as shown below by specified amount (roughly up to level hole).

Tightening torque
Oil drain plug (a): 23 N·m (2.3 kg-m, 17.0 lb-ft)

NOTE:

- **It is highly recommended to use SAE 75W-90 gear oil.**
- **Whenever vehicle is hoisted for any other service work than oil change, also be sure to check for oil leakage.**

Gear oil:
API GL-4
For oil viscosity, refer to the chart [A].
Oil capacity: 1.2 liters (2.5/2.1 US/Imp. pt)

4) Tighten new level / filler plug (2) to specified torque.

Tightening torque
Oil level / filler plug (b): 23 N·m (2.3 kg-m, 17.0 lb-ft)

4WD Switch Removal and Installation

Removal

1) Disconnect negative (–) cable at battery.
2) Hoist vehicle.

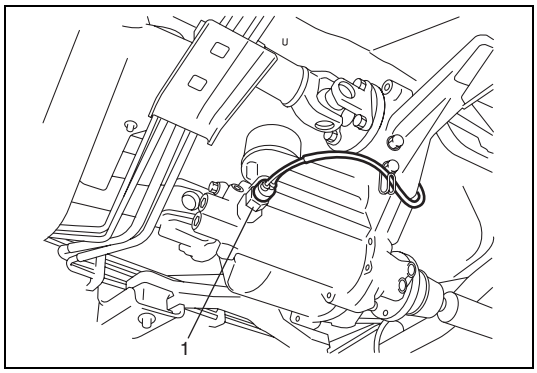

3) Disconnect 4WD switch coupler.
4) Remove 4WD switch (1) from transfer assembly.

Installation

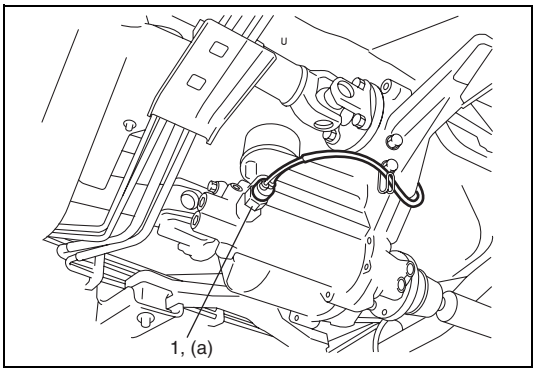

1) Install 4WD switch (1) to transfer assembly.

Tightening torque
4WD switch (a): 19 N·m (1.9 kg-m, 14.0 lb-ft)

2) Connect 4WD switch coupler.
3) Connect negative (–) cable at battery.

4WD Switch Inspection

1) Hoist vehicle.

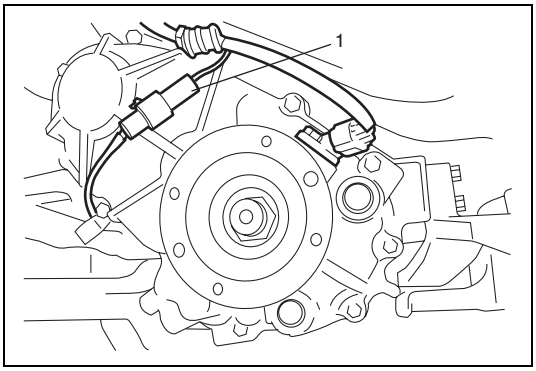

2) Disconnect 4WD switch coupler (1).

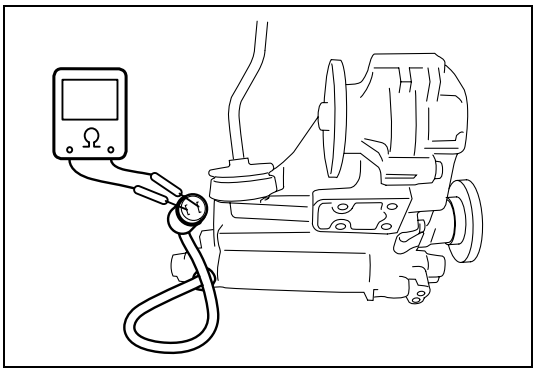

3) Check continuity between two terminals of 4WD switch in each transfer position.
   If check result is out of specification, replace 4WD switch.

4WD switch specification

Transfer position	
2H	Not continuity
4H and 4L	Continuity

4) Connect 4WD switch coupler.

VSS Removal and Installation

Removal

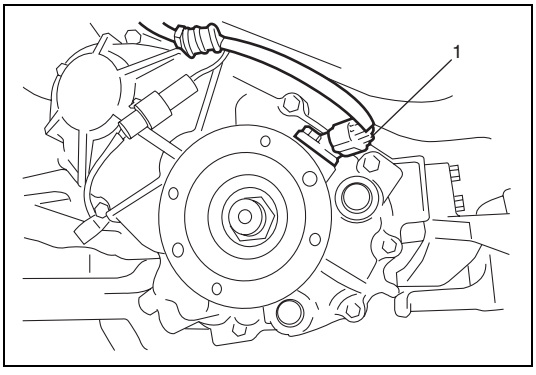

1) Disconnect negative (–) cable at battery.
2) Hoist vehicle.
3) Disconnect VSS coupler (1).
4) Remove VSS (2) from transfer assembly.

Installation

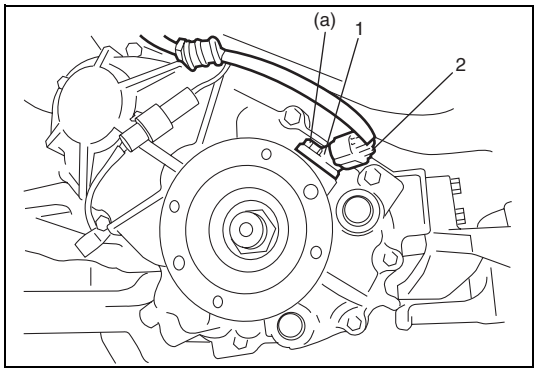

1) Install VSS (1) with new O-ring to transfer assembly.

Tightening torque
VSS bolt (a): 5 N·m (0.5 kg-m, 3.5 lb-ft)

2) Connect VSS coupler (2).
3) Connect negative (–) cable at battery.

Transfer Assembly Mounting Components

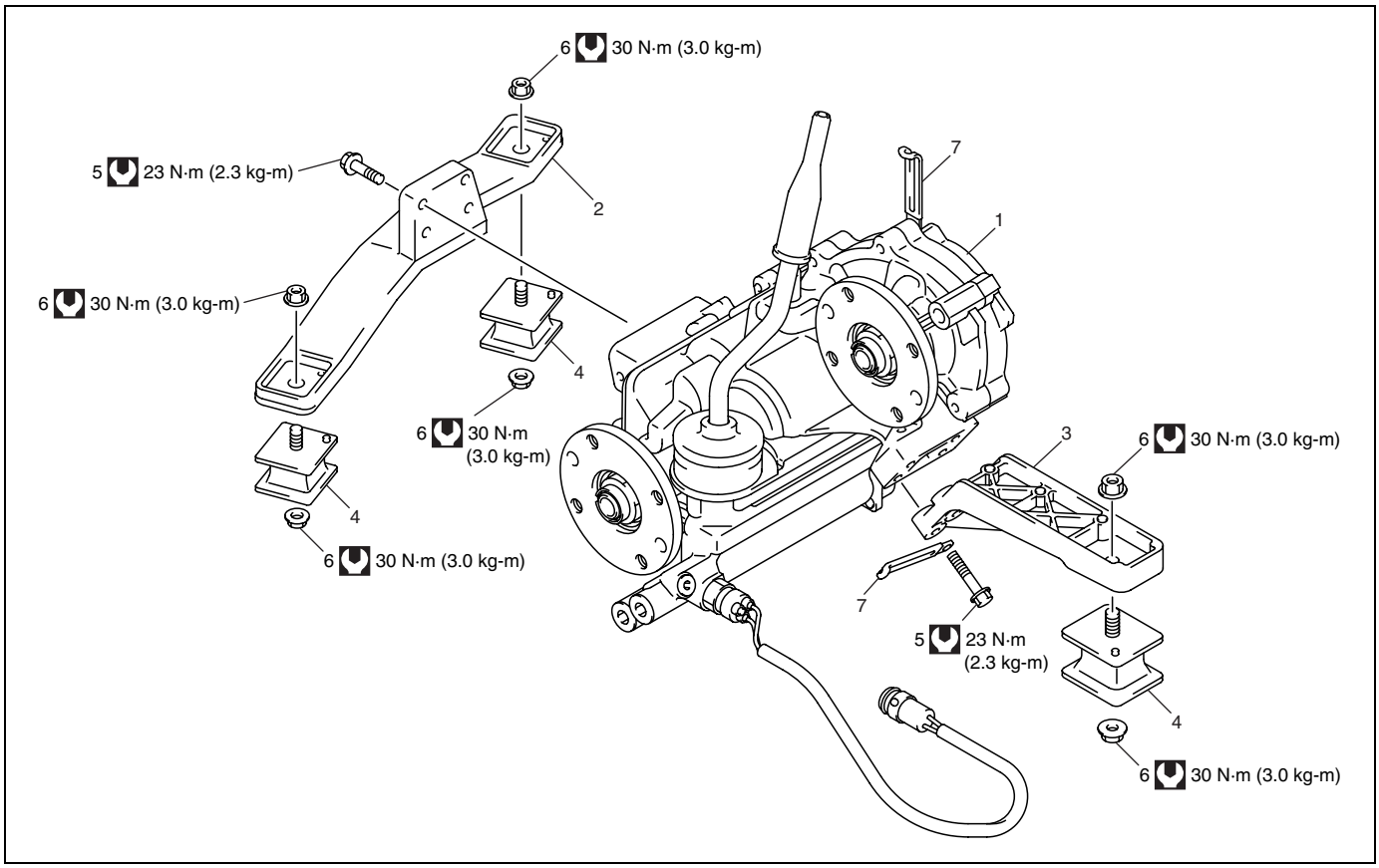

1. Transfer assembly	4. Mounting	7. Clamp
2. Mounting left bracket	5. Transfer mounting bracket bolt	Tightening torque
3. Mounting right bracket	6. Transfer mounting nut	

Transfer Assembly Dismounting and Remounting

Dismounting

1) Disconnect negative (–) cable at battery.

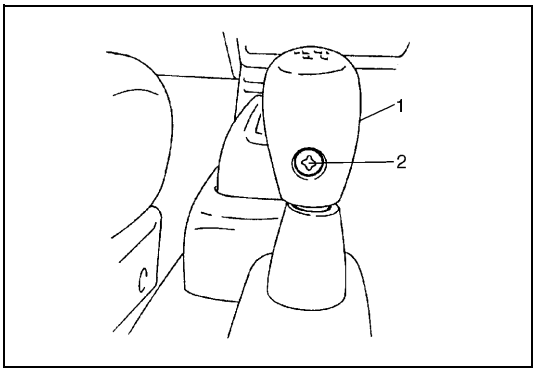

2) Remove transfer shift knob (1) by removing screw (2).
3) Drain transfer oil referring to “Transfer Gear Oil Change” in this section.

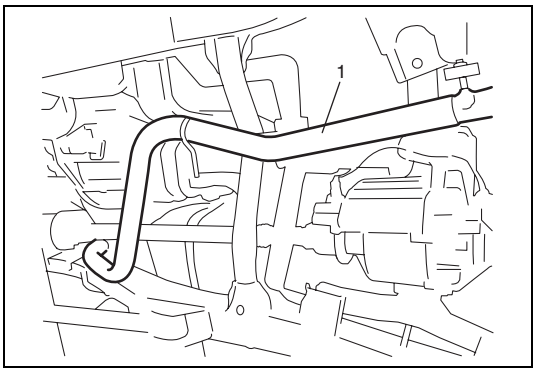

4) Remove exhaust pipe (1).
5) Remove front and rear propeller shaft referring to “Propeller Shafts” in Section 4B.

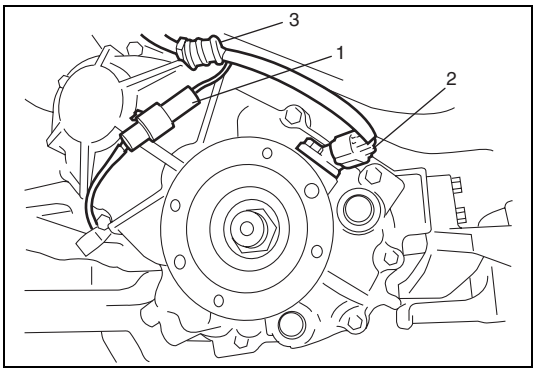

6) Disconnect 4WD switch wire at coupler (1) and unclamp harness.
7) Disconnect VSS coupler.

2.	VSS
3.	Clamp

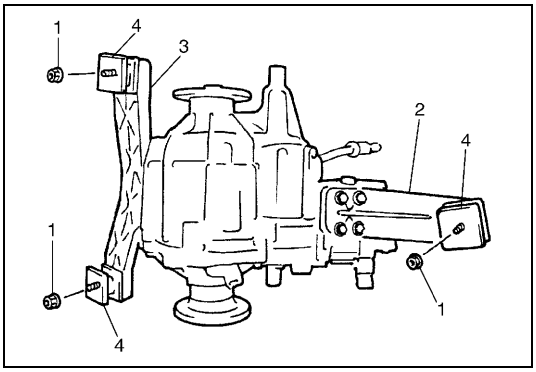

8) With transfer supported on jack, remove 3 mounting nuts (1), and then mounting right bracket (2) from transfer.
9) Remove transfer with mounting left bracket (3) from vehicle body.
10) Remove mounting left bracket from transfer.

4.	Mounting

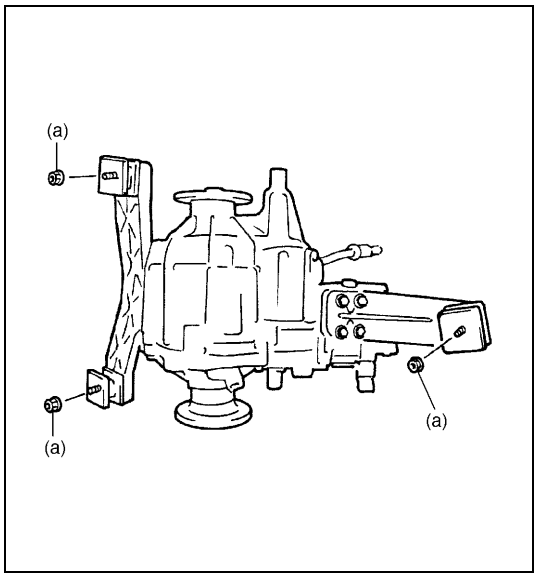

Remounting

Reverse dismounting procedure for remounting noting the following.

- Tighten bolts and nuts to specified torque.

Tightening torque
Transfer mounting nut
(a): 30 N·m (3.0 kg-m, 22.0 lb-ft)

- Set each clamp for wiring securely.
- Connect couplers to VSS and 4WD switch securely.
- Refill transfer gear oil referring to “Transfer Gear Oil Change” in this section.
- Install front and rear propeller shaft referring to “Propeller Shafts” in Section 4B.
- Install exhaust pipe referring to “Exhaust Component” in Section 6K2.
- Install shift knob.
- Connect battery negative (–) terminal to battery.

Unit Repair Overhaul

Transfer Unit Components

Transfer Case Component

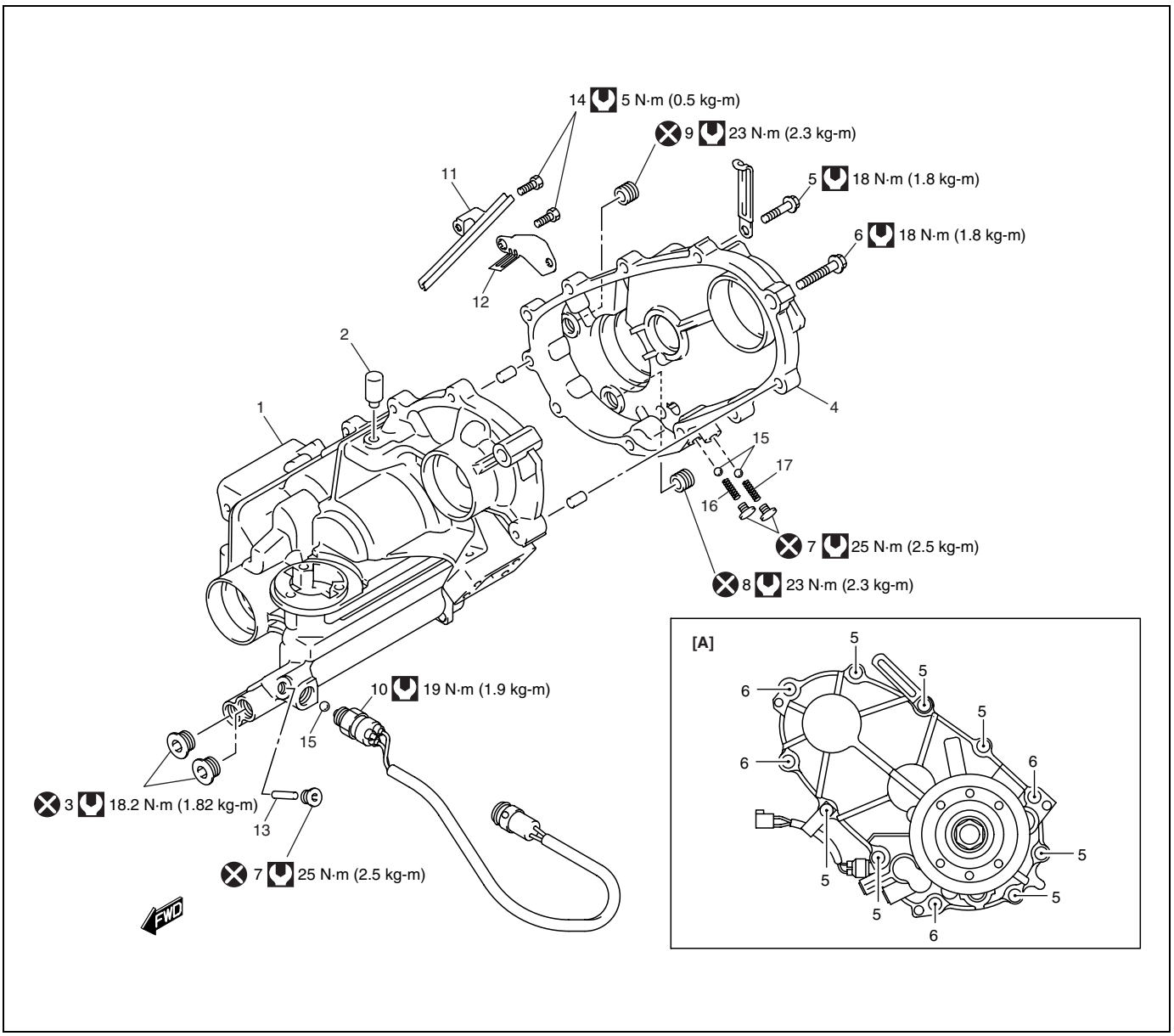

[A]: Transfer case bolt location	7. Locating spring bolt	14. Transfer oil protect plate bolt
1. Front case	8. Oil drain plug	15. Steel ball
2. Plug	9. Oil level / filler plug	16. Locating spring (23.7 mm (0.93 in.))
3. Locating plug	10. 4WD switch	17. Locating spring (42.0 mm (1.65 in.))
4. Rear case	11. Oil receiver	Tightening torque
5. Transfer case bolt (short)	12. Oil protect plate	Do not reuse.
6. Transfer case bolt (long)	13. Front drive shift shaft pin	

Transfer Gear Component

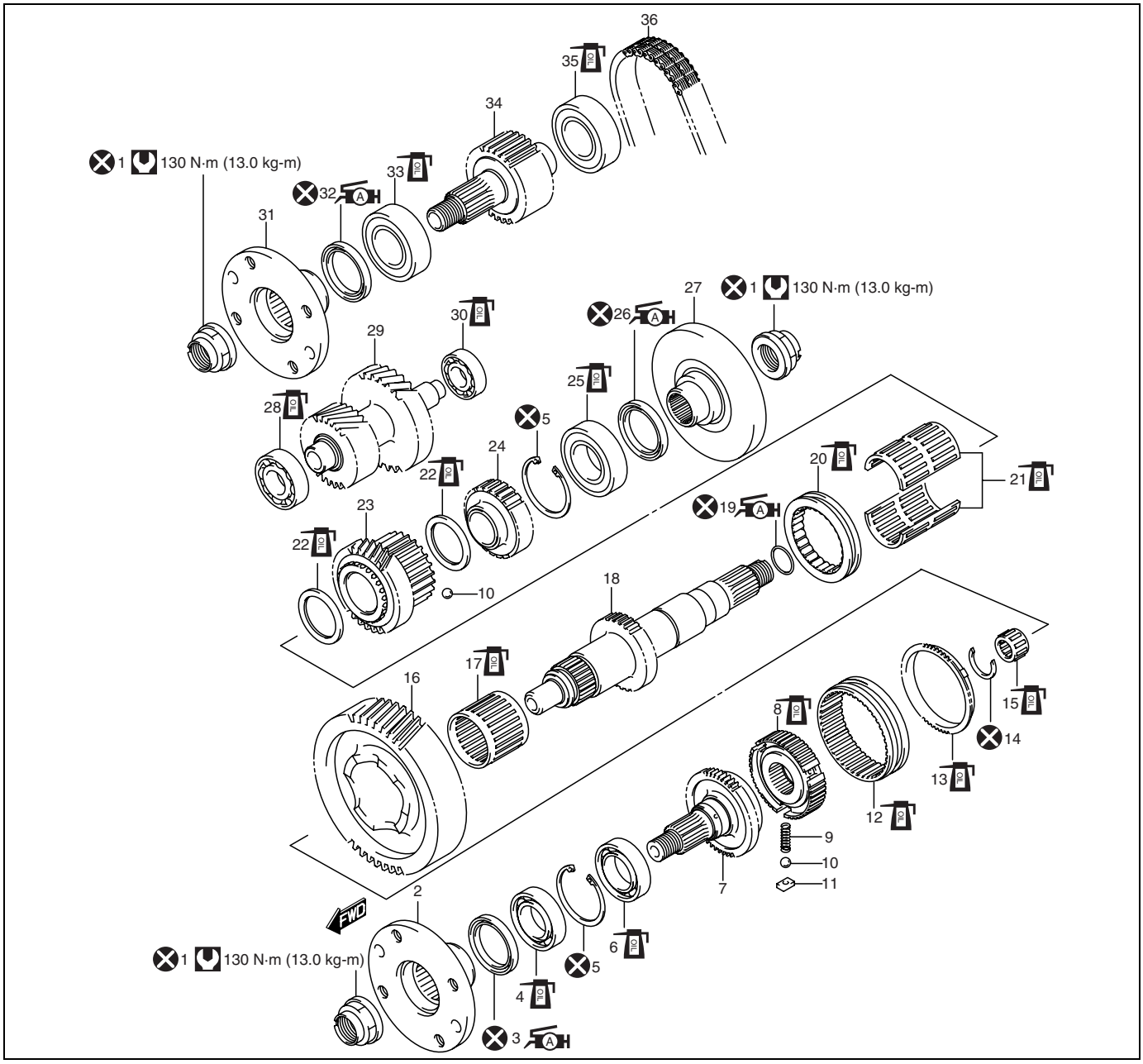

1. Flange nut	14. Output shaft snap ring	27. Rear flange (with dynamic damper)
2. Output front flange (without dynamic damper)	15. Output front shaft bearing	28. Counter gear No.1 bearing
3. Front case No.1 oil seal : Apply grease 99000-25010 to oil seal lip.	16. Output low gear	29. Counter gear
4. Front case No.1 bearing	17. Output rear shaft No.1 bearing	30. Counter gear No.2 bearing
5. Circlip	18. Output rear shaft	31. Input front flange (without dynamic damper)
6. Output front shaft bearing	19. O-ring : Apply grease 99000-25010 to all around surface.	32. Front case No.2 oil seal : Apply grease 99000-25010 to oil seal lip.
7. Output front shaft	20. Reduction clutch sleeve	33. Front case No.2 bearing
8. Front drive clutch hub	21. Output rear shaft No.2 bearing	34. Input shaft
9. Key spring	22. Sprocket output gear bearing	35. Input shaft bearing
10. Steel ball	23. Sprocket output gear	36. Drive chain
11. Key	24. VSS rotor	Do not reuse.
12. Front drive clutch hub sleeve	25. Rear case bearing	Tightening torque
13. Synchronizer ring	26. Rear case oil seal : Apply grease 99000-25010 to oil seal lip.	Apply transfer gear oil

Transfer Shift Shaft Component

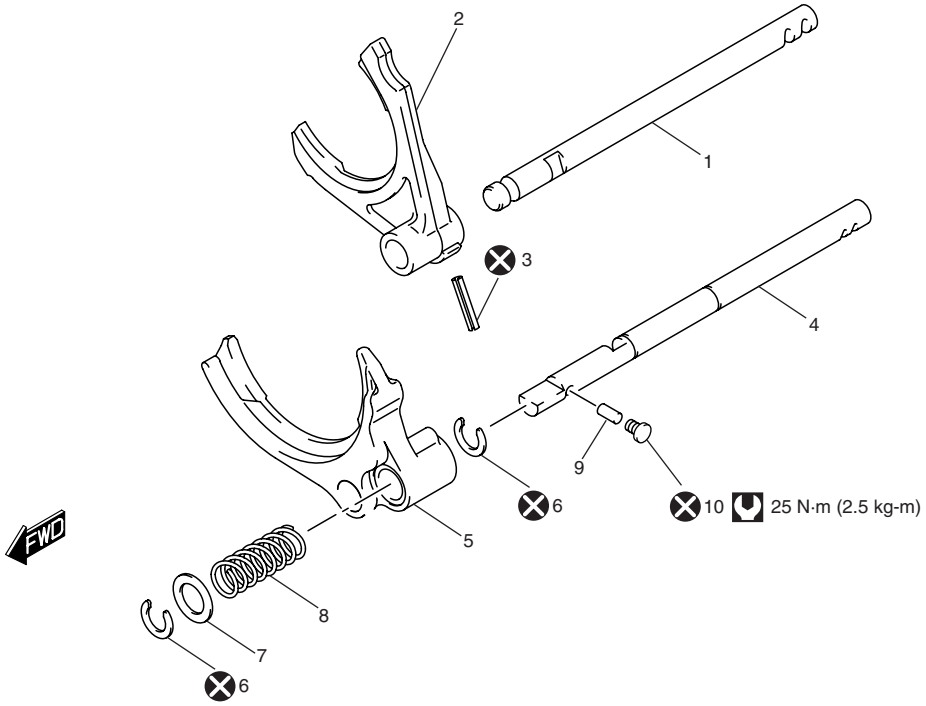

1. Reduction shift shaft	5. Front drive gear shift fork	9. Straight pin
2. High & low shift fork	6. Snap ring	10. Locating spring bolt
3. Spring pin	7. Washer	⊗ Do not reuse.
4. Front drive shift shaft	8. Shift fork spring	Tightening torque

Transfer Shift Lever Component

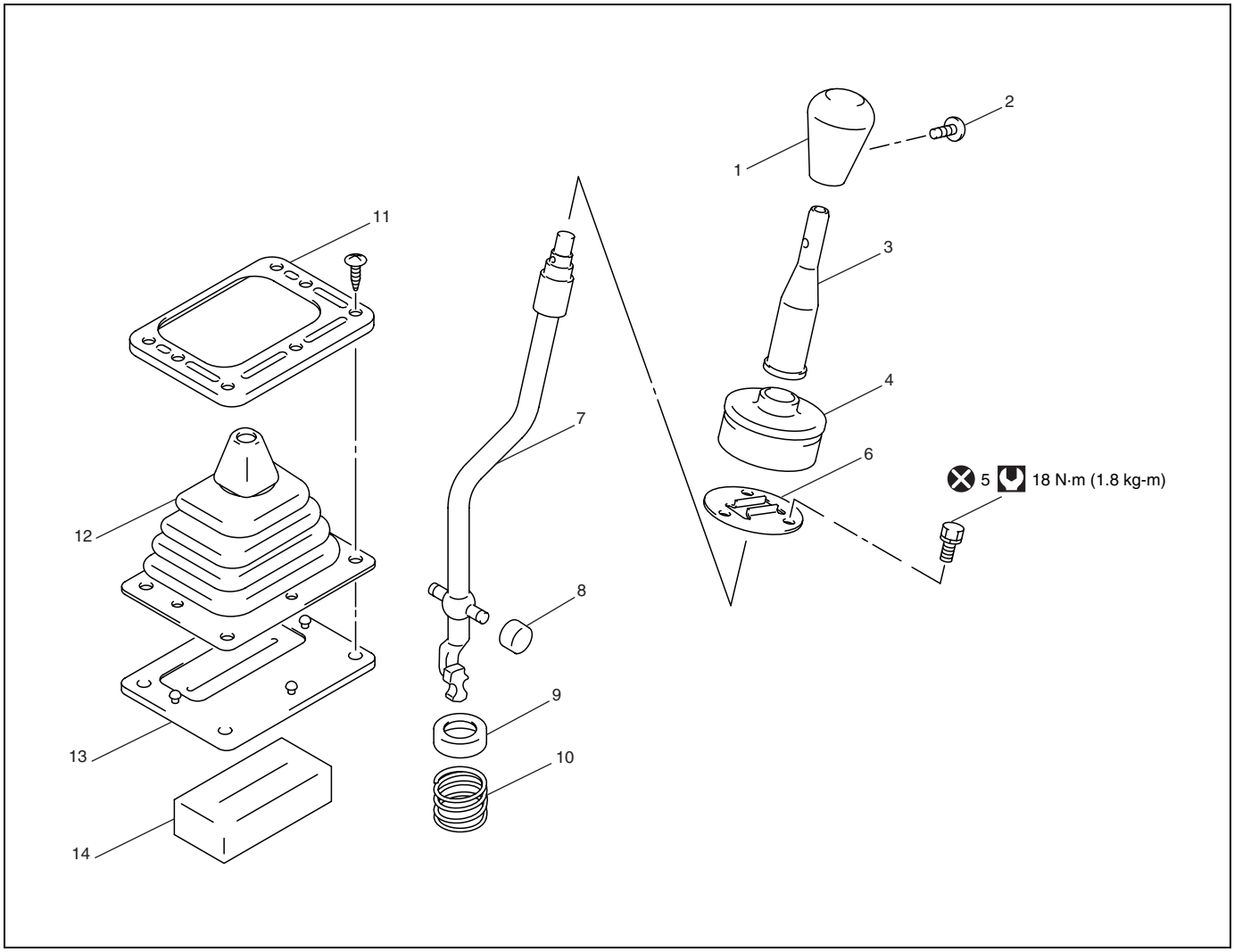

1. Shift knob	6. Retainer	11. Boot cover
2. Shift knob screw	7. Shift control lever	12. Shift control lever boot
3. Transfer shift lever	8. Bush	13. Lever sheet
4. Boot	9. Shift lever cap	14. Shift control lever silencer
5. Retainer bolt	10. Spring	Tightening torque

Transfer Unit Disassembly and Reassembly

Disassembly

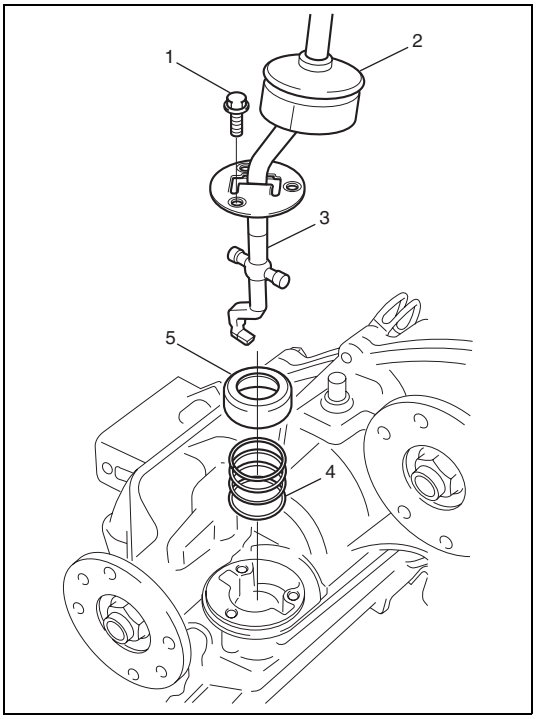

1) Adjust shift control lever (3) to 4H position.
2) Slide boot (2) to upward, and then remove retainer bolts (1).
3) Remove shift control lever (3), spring (4) and shift lever cap (5).

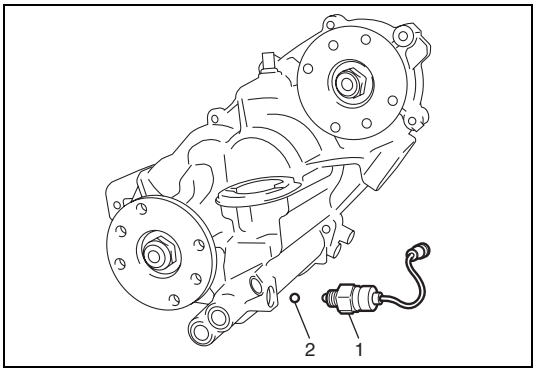

4) Remove 4WD switch (1) and take out steel ball (2).

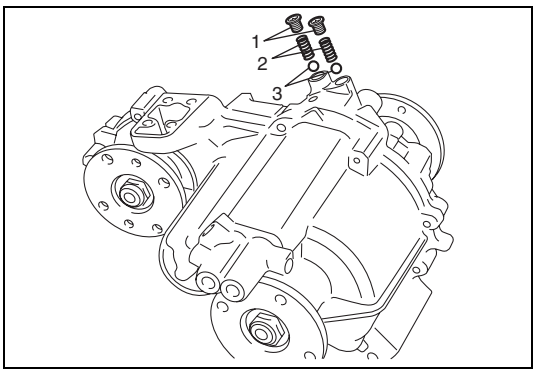

5) Remove locating spring bolts (1) and take out locating springs (2) and steel balls (3).

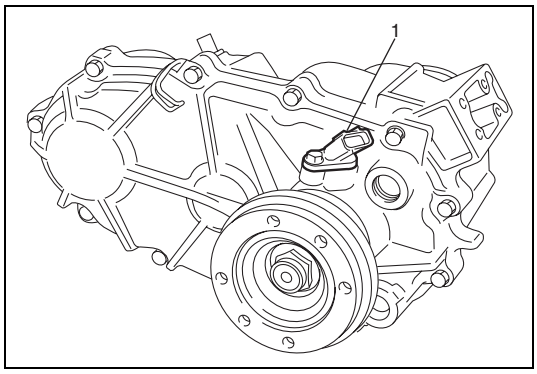

6) Remove VSS (1) from transfer.

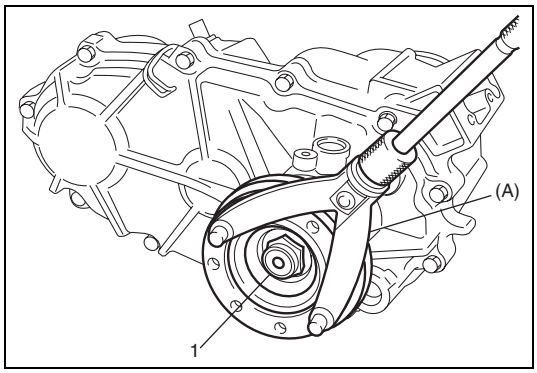

7) Remove rear flange (with dynamic damper). To lock flange, use special tool. With flange locked, remove flange nut (1).

Special tool
(A): 09930-40113

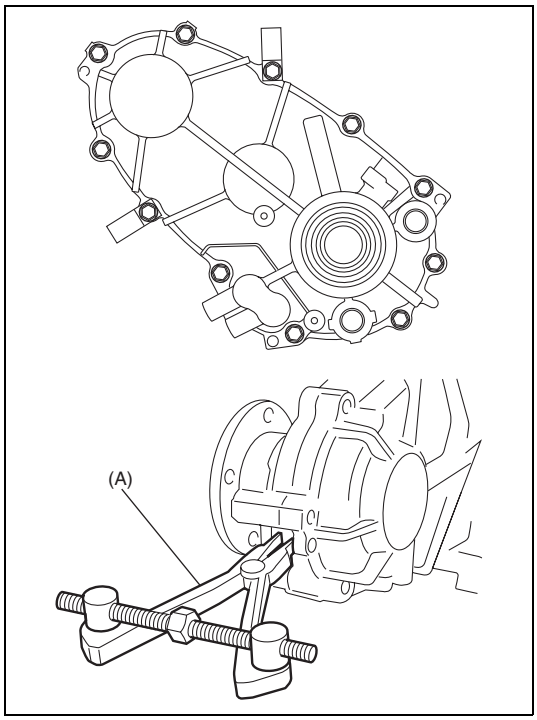

8) Remove 11 rear case bolts, and then separate front and rear cases using special tool.

NOTE:

To separate cases, use special tool at 2 points in turn and make opening wider evenly.

Special tool
(A): 09912-34501

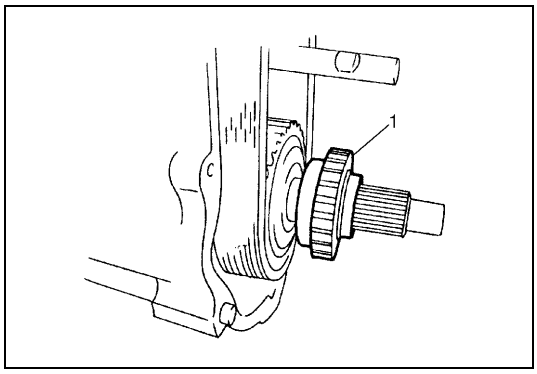

9) Pull out VSS rotor (1) and steel ball.

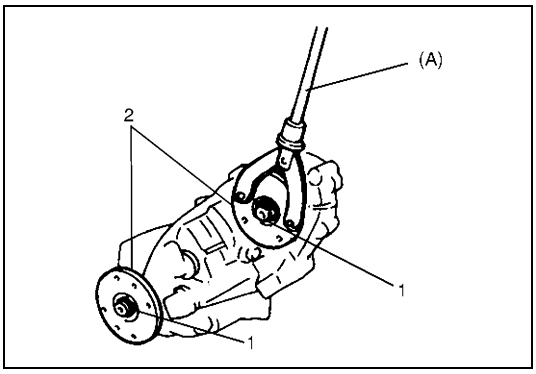

10) Remove front flanges (without dynamic damper) (2). To lock flange, use special tool.
With flange locked, remove flange nut (1).

Special tool
(A): 09930-40113

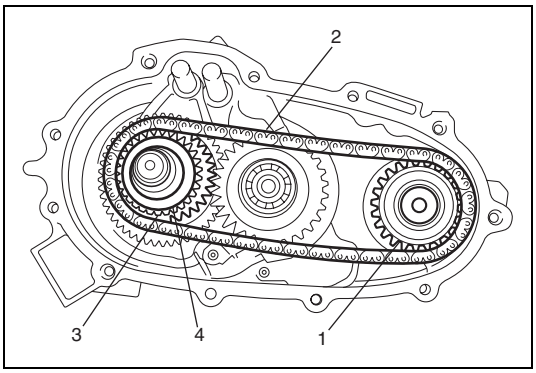

11) Remove drive chain (2), input shaft (1), thrust bearing (4) and sprocket output gear (3) as an assembly.

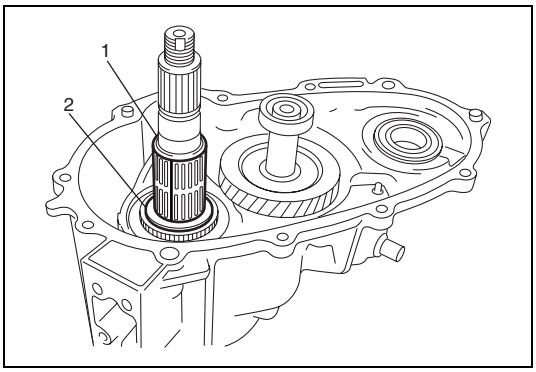

12) Remove needle roller bearings (1) and thrust bearing (2).

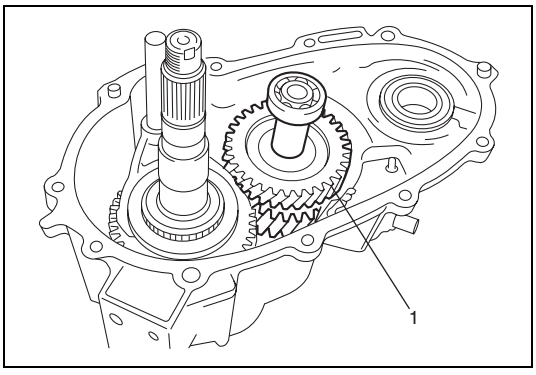

13) Remove counter gear assembly (1) from front case.

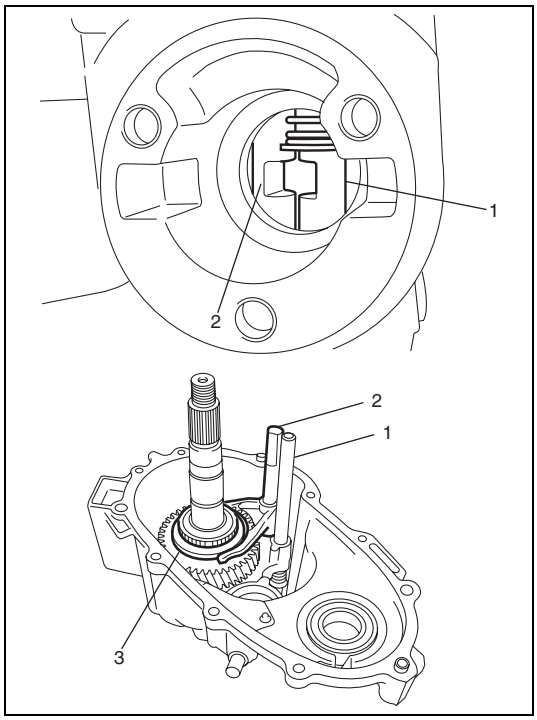

14) Shift front drive shift shaft (1) and reduction shift shaft (2) to 4H position as shown in figure.
15) Disconnect reduction shift shaft assembly with reduction clutch sleeve (3).

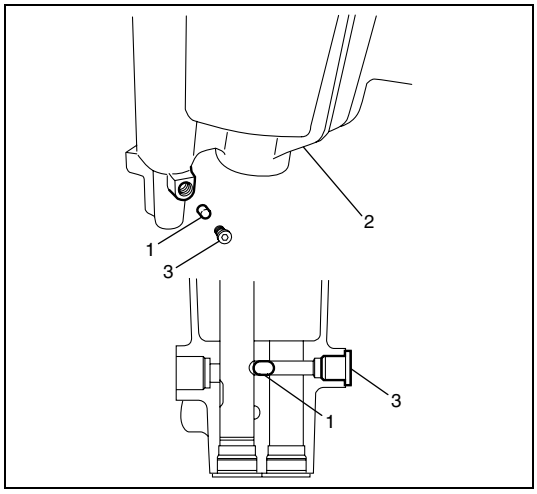

16) Remove straight pin (1) and locating spring bolt (3) from front case (2) as shown in figure.

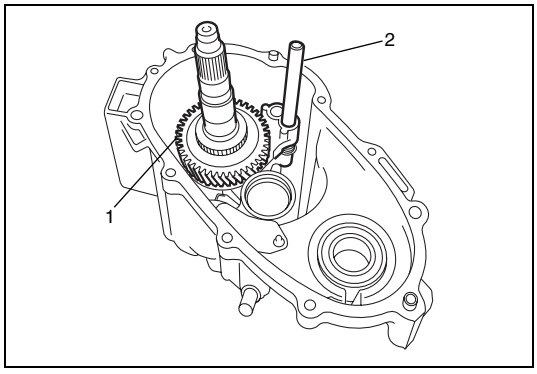

17) Remove output rear shaft assembly (1) with front drive shift shaft assembly (2).

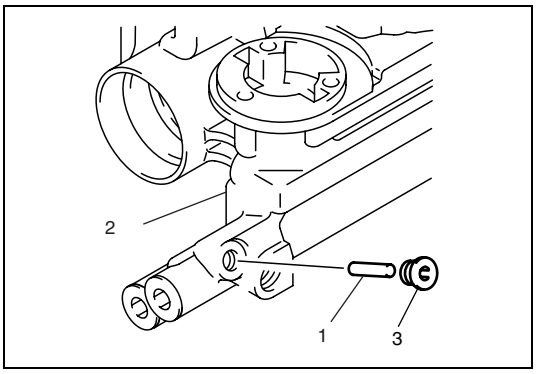

18) Remove front drive shift shaft pin (1) and locating spring bolt (3) from front case (2).

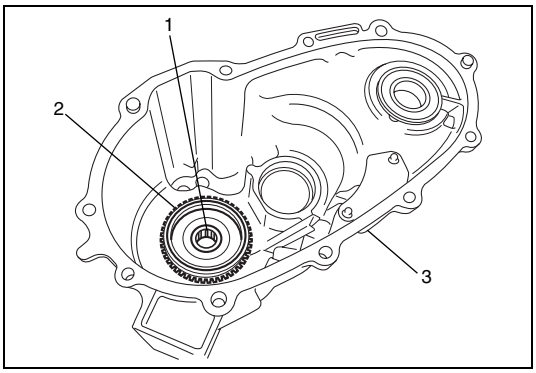

19) Remove needle roller bearing (1) and synchronizer ring (2) from front case (3).

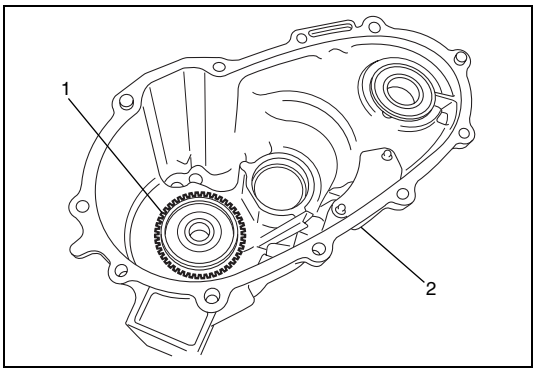

20) Remove output front shaft assembly (1) from front case (2).

Reassembly

1) Install output front shaft to front case.

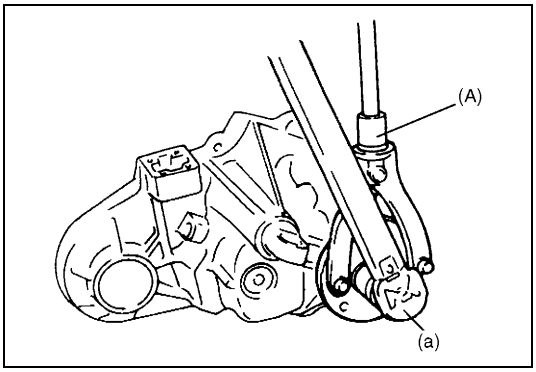

2) Install output front flange (without dynamic damper), tighten new flange nut with flange locked by special tool.

Special tool
(A): 09930-40113

Tightening torque
Flange nut (a): 130 N·m (13.0 kg-m, 94 lb-ft)

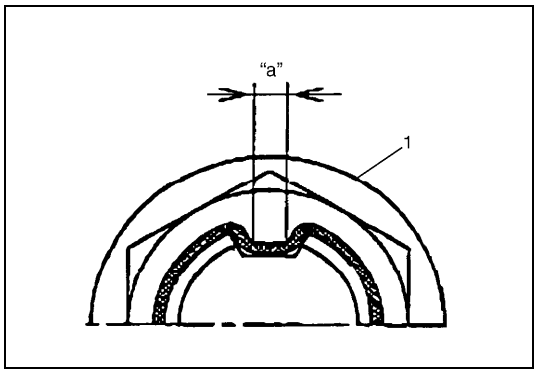

3) Caulk flange nut (1).

CAUTION:
Be sure to caulk flange nut on the output front shaft groove securely as shown in figure.
If not, it may cause for loosening flange nut.

"a": 3.8 mm (0.15 in.) or more

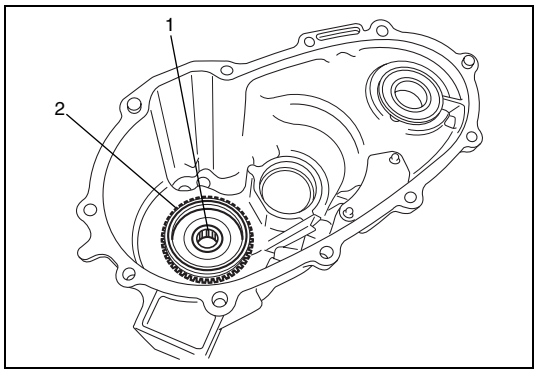

4) Apply transfer gear oil to needle roller bearing (1) and synchronizer ring (2), and then install them to output front shaft.

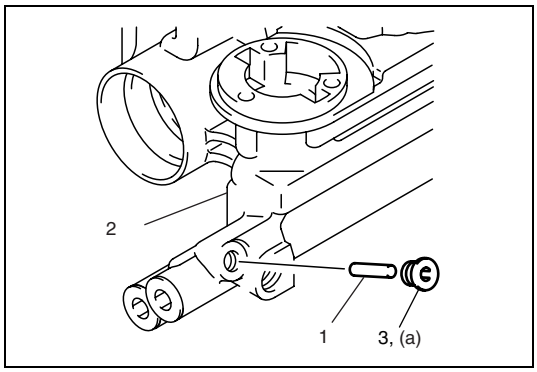

5) Put in front drive shift shaft pin (1) to front case (2).
6) Tighten new locating spring bolt (3) to specified torque.

Tightening torque
Locating spring bolt (a): 25 N·m (2.5 kg-m, 18.0 lb-ft)

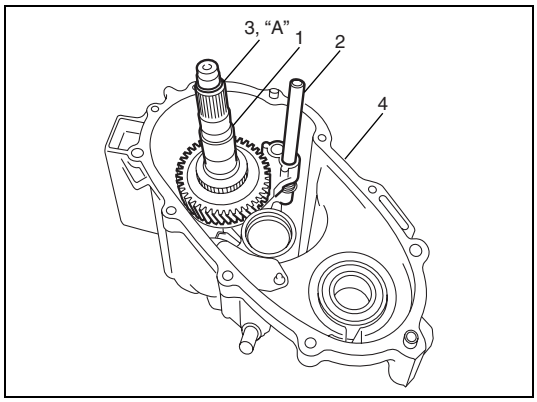

7) Install output rear shaft assembly (1) with front drive shift shaft (2) to front case (4).

NOTE:
Make sure that cutout side of output rear shaft is aligned with front drive shift shaft pin.

8) Apply grease to new O-ring (3), and then install it to output rear shaft (1).

"A": Grease 99000-25010

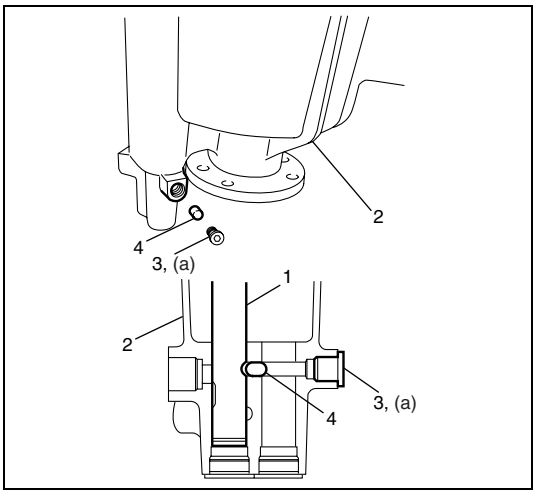

9) Shift front drive shift shaft (1) to 4H position as shown in figure.
10) Put in straight pin (4) from bolt hole until straight pin comes into contact with front drive shift shaft as shown in figure.
11) Tighten new locating spring bolt (3) to specified torque.

Tightening torque
Locating spring bolt (a): 25 N·m (2.5 kg-m, 18.0 lb-ft)

2. Front case

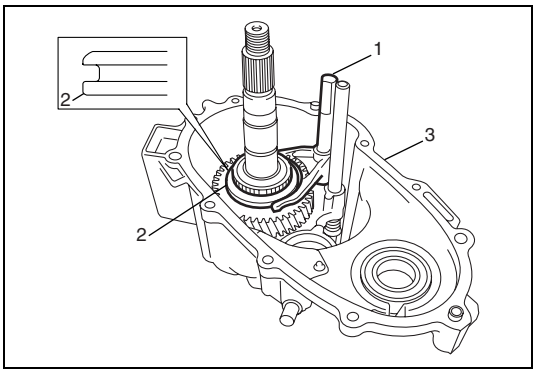

12) Install reduction shift shaft assembly (1) with reduction clutch sleeve (2) to front case (3).

NOTE:
Be sure to install clutch sleeve (2) to proper direction as shown in figure.

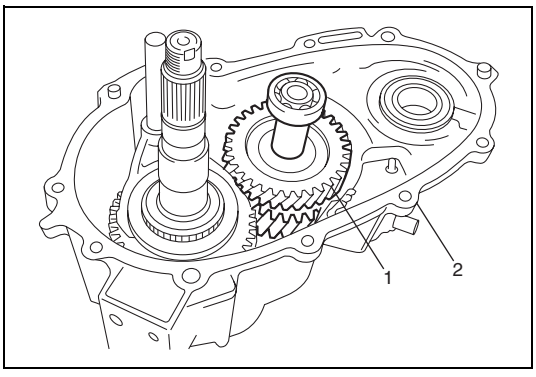

13) Install counter gear assembly (1) to front case (2).

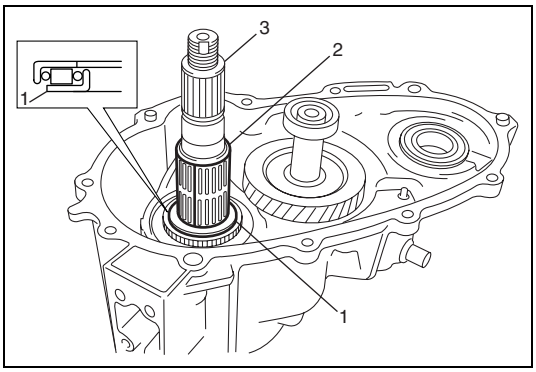

14) Apply transfer gear oil to thrust bearing (1) and needle roller bearing (2), and then install them to output rear shaft (3).

NOTE:
Be sure to install thrust bearing (1) to proper direction as shown in figure.

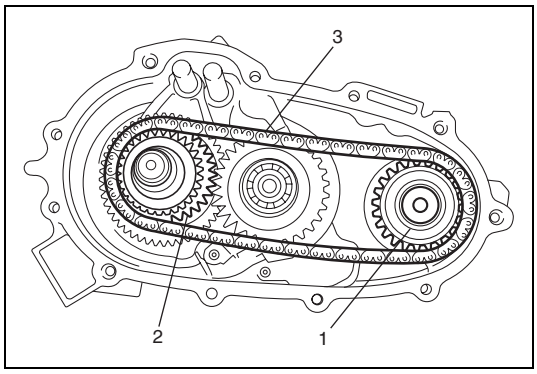

15) Install input shaft (1), sprocket output gear (2) and drive chain (3) as an assembly to front case.

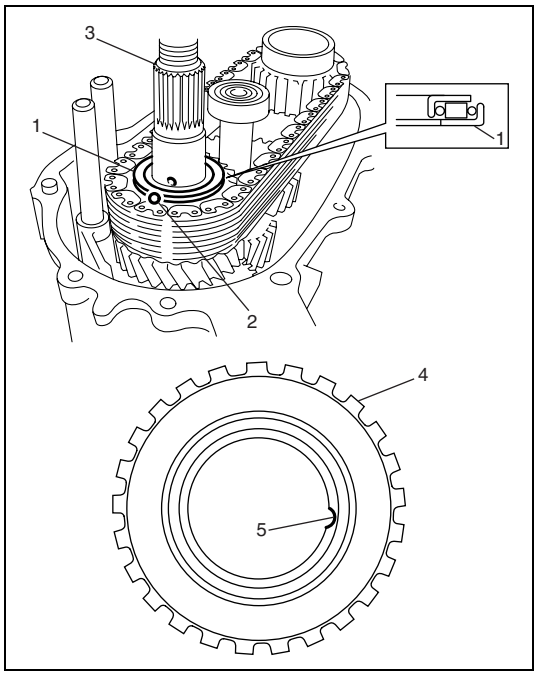

16) Apply transfer gear oil to thrust bearing (1), and then install thrust bearing (1) and steel ball (2) to output rear shaft (3).

NOTE:

Be sure to install thrust bearing (1) to proper direction as shown in figure.

17) Install VSS rotor (4) to output shaft aligning its slot (5) with steel ball.

NOTE:

Turn VSS rotor, and check to rotate together with output rear shaft.

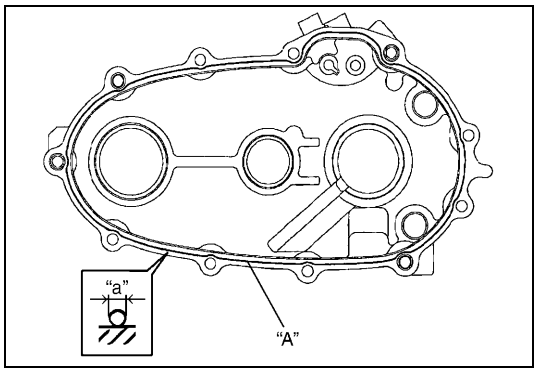

18) After cleaning mating surfaces of both cases, coat mating surface of front case with sealant evenly and put it over rear case.

"A": Sealant 99000-31260

Sealant amount
Diameter "a": 1.2 mm (0.05 in.)

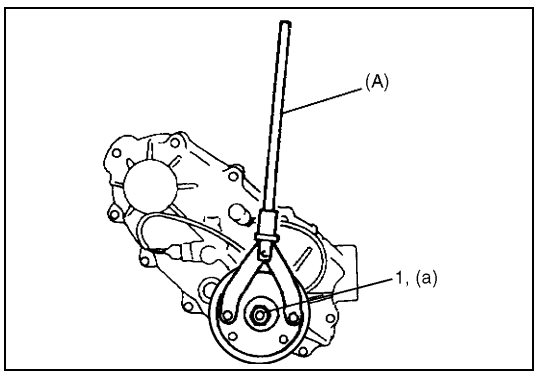

19) Align front case and rear case, then install rear flange (with dynamic damper), tighten new flange nut (1) with flange locked by special tool.

Special tool
(A): 09930-40113

Tightening torque
Flange nut (a): 130 N·m (13.0 kg-m, 94.0 lb-ft)

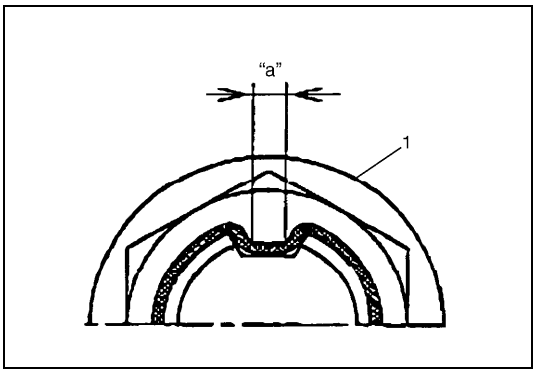

20) Caulk flange nut (1).

CAUTION:
Be sure to caulk flange nut on the output rear shaft groove securely as shown in figure.
If not, it may cause for loosening flange nut.

"a": 3.8 mm (0.15 in.) or more

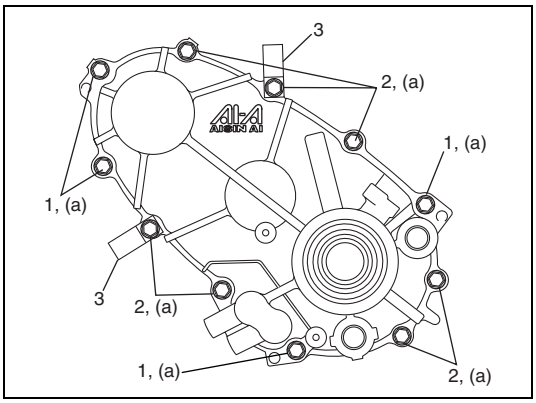

21) Tighten 11 case bolts.

Tightening torque
Transfer case bolt (a): 18 N·m (1.8 kg-m, 13.0 lb-ft)

1.	Long bolt
2.	Short bolt
3.	Clamp

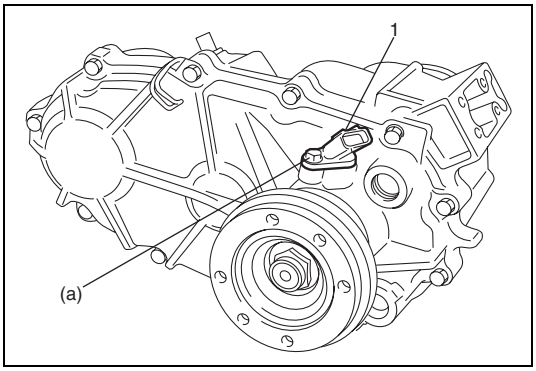

22) Install VSS (1) with new O-ring.

Tightening torque
VSS bolt (a): 5 N·m (0.5 kg-m, 3.5 lb-ft)

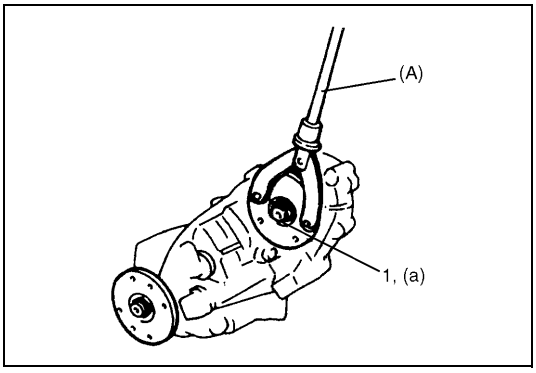

23) Install input front flange (without dynamic damper), tighten new flange nut (1) with flange locked by special tool.

Special tool
(A): 09930-40113

Tightening torque
Flange nut (a): 130 N·m (13.0 kg-m, 94.0 lb-ft)

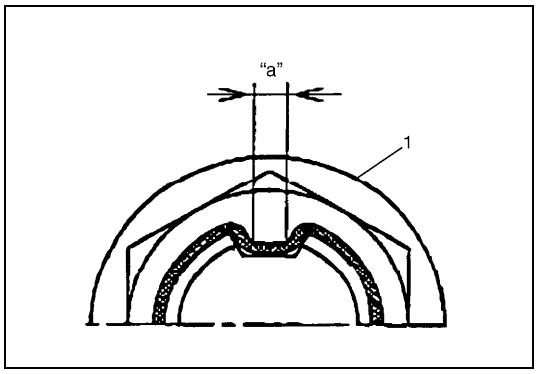

24) Caulk flange nut (1).

CAUTION:
Be sure to caulk flange nut on the input shaft groove securely as shown in figure.
If not, it may cause for loosening flange nut.

"a": 3.8 mm (0.15 in.) or more

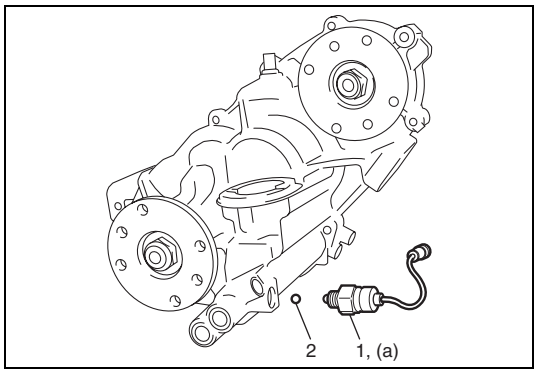

25) Install steel ball (2) and 4WD switch (1).

Tightening torque
4WD switch (a): 19 N·m (1.9 kg-m, 14.0 lb-ft)

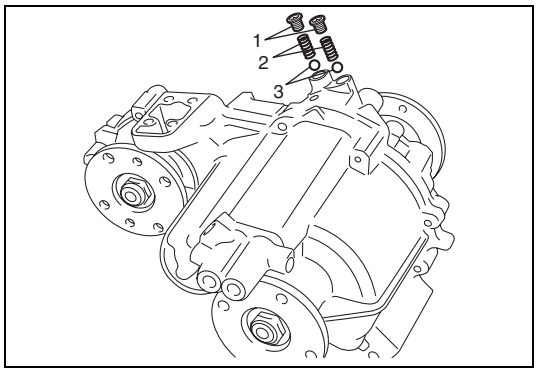

26) Install steel balls (3), locating springs (2) and new locating spring bolts (1).

Tightening torque
Locating spring bolt (a): 25 N·m (2.5 kg-m, 18.0 lb-ft)

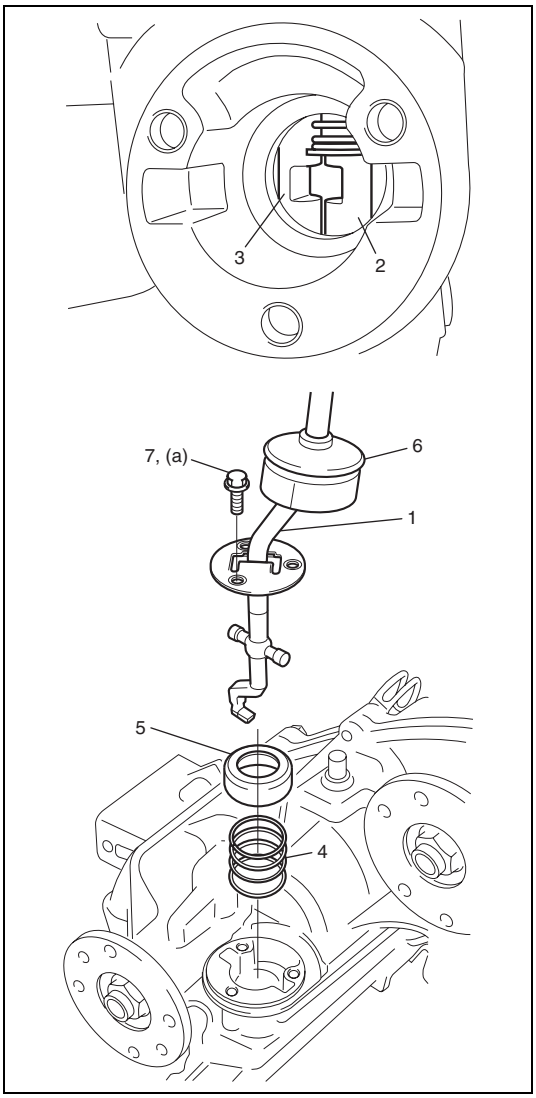

27) Set front drive shift shaft (2) and reduction shift shaft (3) at 4H shift position as shown in figure.
28) Install shift control lever (1) through spring (4) and cap (5) and fit boot (6) to front case, and tighten new retainer bolts (7).

Tightening torque
Retainer bolt (a): 18 N·m (1.8 kg-m, 13.0 lb-ft)

Transfer Inspection

- Check each bearing for smooth rotation.
  If found abnormal, replace.
- Check needle bearing and bearing contacting surface for damage. Replace as required.

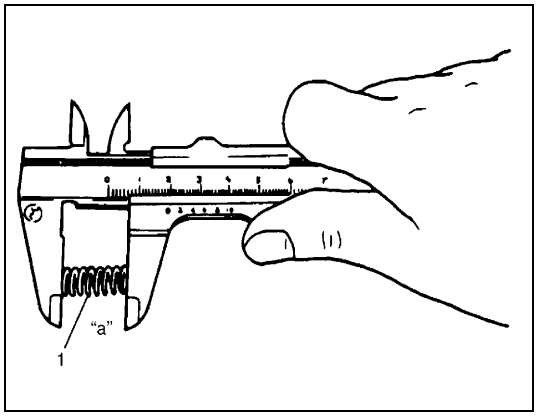

- Check each spring for distortion or breakage and change it with new one as necessary.

Locating spring (short) free length "a":
23.7 mm (0.933 in.)

Locating spring (long) free length "a":
42.0 mm (1.654 in.)

- Check drive chain and sprockets for abnormal wear or damage. Replace as required.
- Check oil seal for leakage and its lip for excessive hardness.
  If either is found, replace.
  Also, check corresponding surface of shaft where oil seal lip contacts. Correct or replace as necessary.

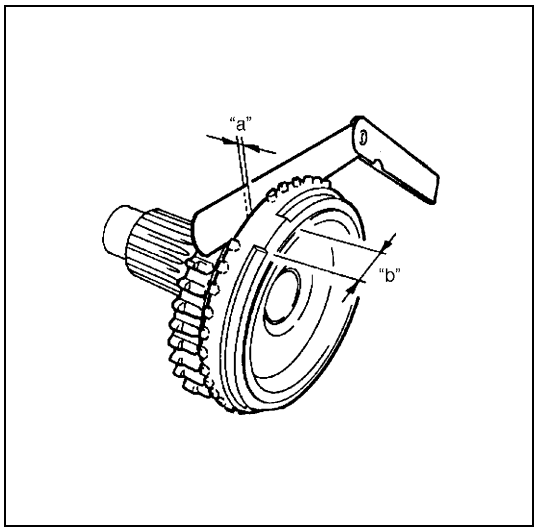

- Check clearance "a" between synchronizer ring and output front shaft, protruding portion width "b" in synchronizer ring and each chamfered tooth of gear and synchronizer ring and synchronizer ring and replace with new one, if necessary. Also, check gear tooth.
  If protruding portion "b" is out of specification, replace synchronizer ring.

Clearance "a" between synchronizer ring and output front shaft
Standard: 0.83 – 1.53 mm (0.033 – 0.060 in.)
Service limit: 0.6 mm (0.024 in.)

Protruding portion width "b":
7.2 – 7.4 mm (0.284 – 0.291 in.)

Front Case Assembly Disassembly and Reassembly

CAUTION:
Pave waste cloth under case in order to prevent mating surface from damage.

Disassembly

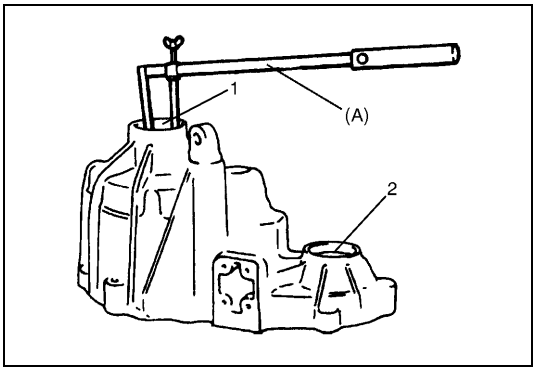

1) By using special tool, remove front case No.1 oil seal (1) and front case No.2 oil seal (2) from front case.

Special tool
(A): 09913-50121

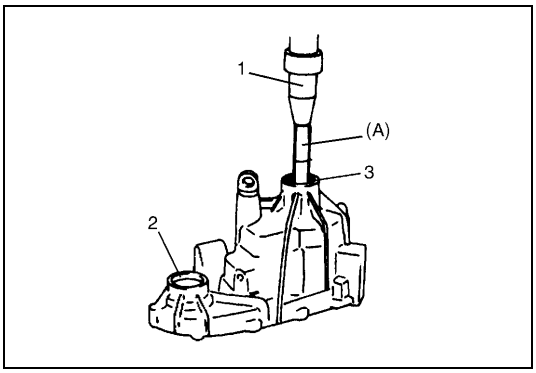

2) Remove circlip, and then remove front case No.1 bearing (3) from front case using special tool and hydraulic press (1).

Special tool
(A): 09913-75830

3) Remove front case No.2 bearing (2) from front case using special tool and hydraulic press (1).

Special tool
(A): 09913-75830

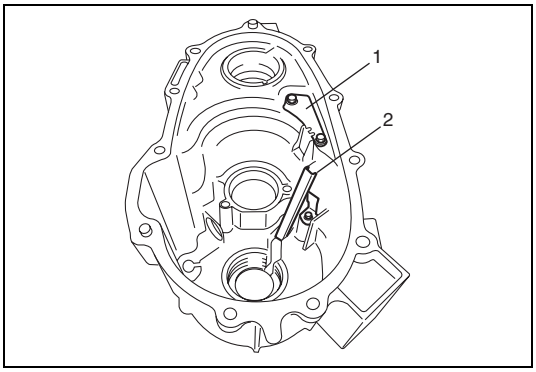

4) Remove oil protect plate (1) and oil receiver (2) from front case, if necessary.

Reassembly

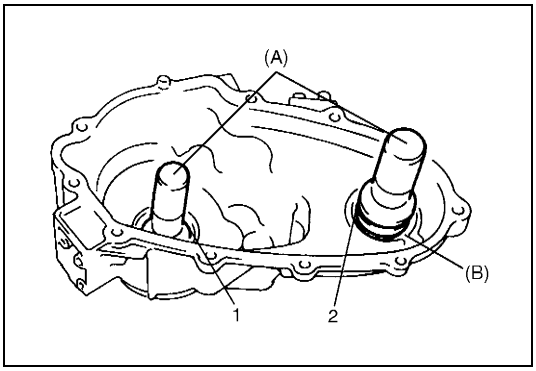

1) Install front case No.1 bearing (1) and front case No.2 bearing (2) to front case using special tools and hammer.

Special tool
(A): 09913-75810
(B): 09944-66020

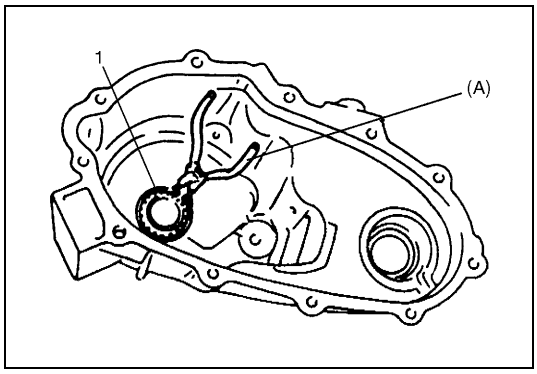

2) Fix front case No.1 bearing with new circlip (1) using special tool.

Special tool
(A): 09900-06108

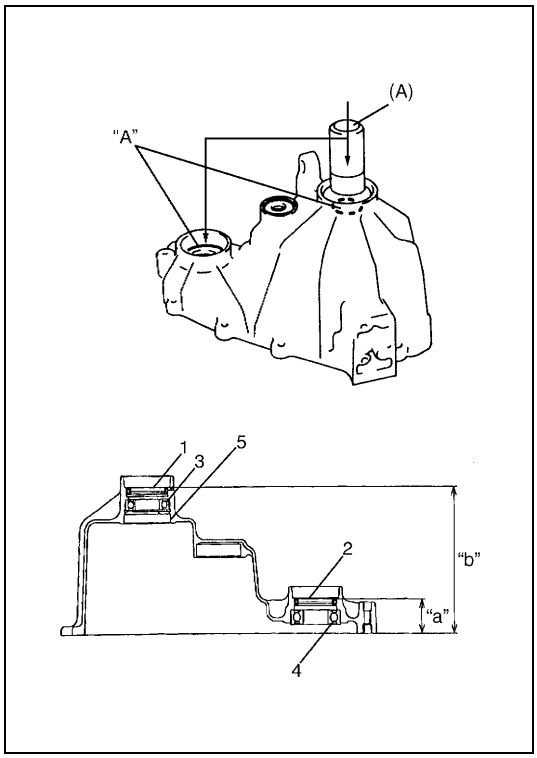

3) By using special tool and hummer, install front case No.1 oil seal (1) and front case No.2 oil seal (2) to front case at specified position as shown in figure. Apply grease to each oil seal lip.

Special tool
(A): 09913-75810

"A": Grease 99000-25010

Transfer front case oil seal installing position
"a": 38.2 – 39.2 mm (1.50 – 1.54 in.)
"b": 164.3 – 165.3 mm (6.47 – 6.51 in.)

3.	Front case No.1 bearing
4.	Front case No.2 bearing
5.	Circlip

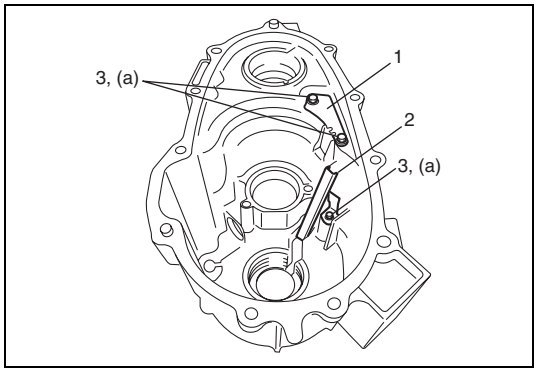

4) Install transfer oil protect plate (1) and transfer oil receiver (2) to front case.

Tightening torque
Transfer oil protect plate bolt
(a): 5 N·m (0.5 kg-m, 3.5 lb-ft)

3.	Transfer oil protect plate bolt

Rear Case Assembly Disassembly and Reassembly

CAUTION:
Pave waste cloth under case in order to prevent mating surface from damage.

Disassembly

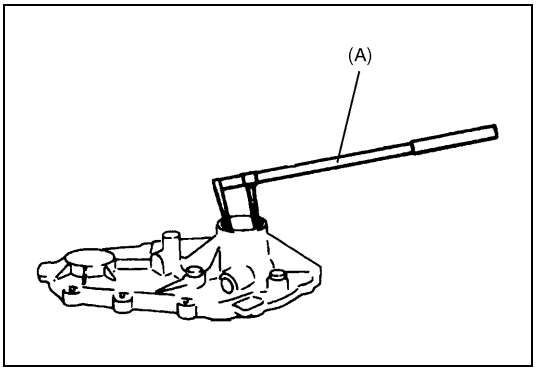

1) Remove rear case oil seal from rear case using special tool.

Special tool
(A): 09913-50121

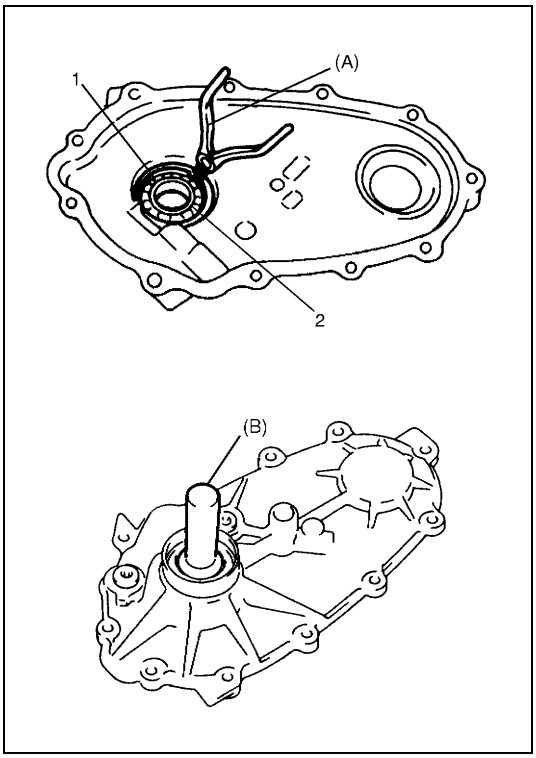

2) Remove circlip (1) using special tool (A), and then remove rear case bearing (2) using special tool (B).

Special tool
(A): 09900-06108
(B): 09913-75830

Reassembly

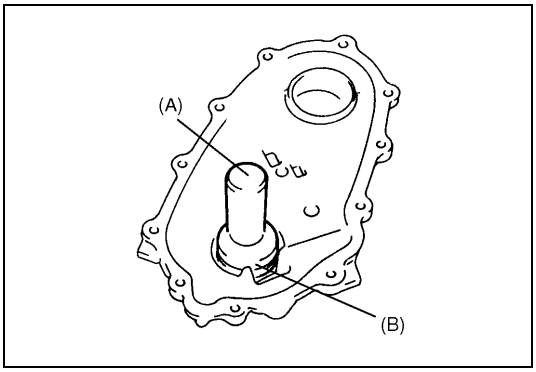

1) Install rear case bearing to rear case (1) using special tool and hammer, and fix it with new circlip.

Special tool
(A): 09913-75810
(B): 09944-66020

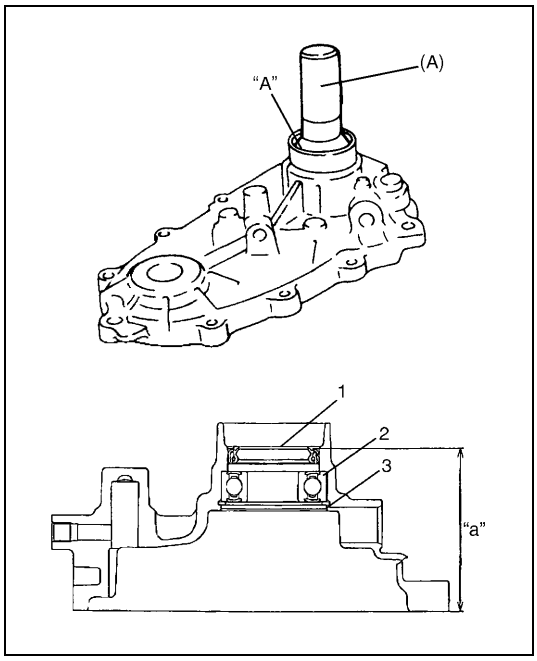

2) Using special tool and hammer, install rear case oil seal (1) to rear case at specified position. Apply grease to oil seal lip.

Special tool
(A): 09913-75810

"A": Grease 99000-25010

Transfer rear case oil seal installing position
"a": 83.9 – 84.9 mm (3.30 – 3.34 in.)

2.	Rear case bearing
3.	Circlip

Transfer Input Shaft Assembly Disassembly and Reassembly

Disassembly

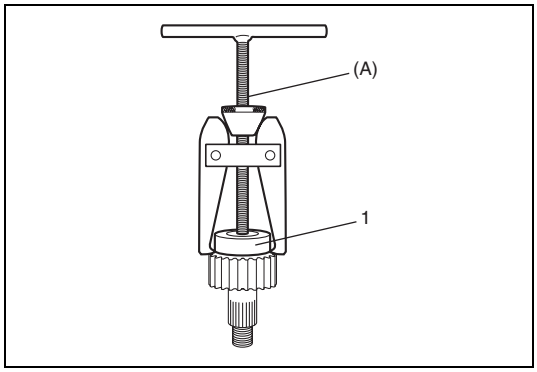

1) Pull out input shaft bearing (1) from input shaft using special tool.

Special tool
(A): 09913-60910

Reassembly

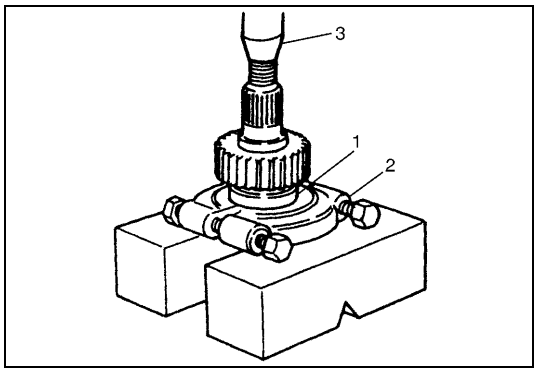

1) Press fit input shaft bearing (1) to input shaft using bearing puller (2) and hydraulic press (3).

CAUTION:
Be sure to fit bearing puller at inner race of bearing in order to prevent bearing from damage.

Transfer Counter Gear Assembly Disassembly and Reassembly

Disassembly

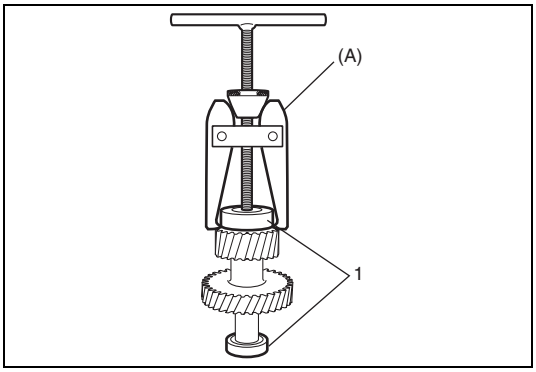

1) Pull out counter gear bearings (1) using special tool.

Special tool
(A): 09913-60910

Reassembly

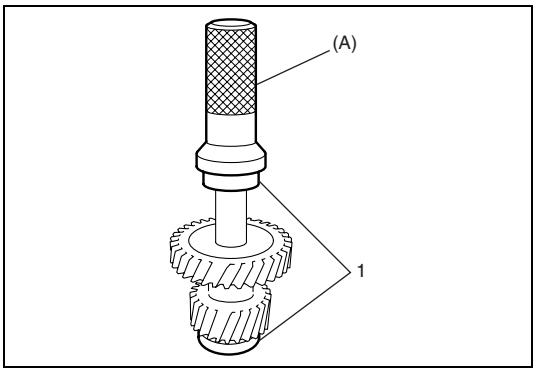

1) Press fit counter gear bearings (1) to counter gear respectively using special tool and hydraulic press.

Special tool
(A): 09913-70123

Reduction Shift Shaft Assembly Disassembly and Reassembly

Disassembly

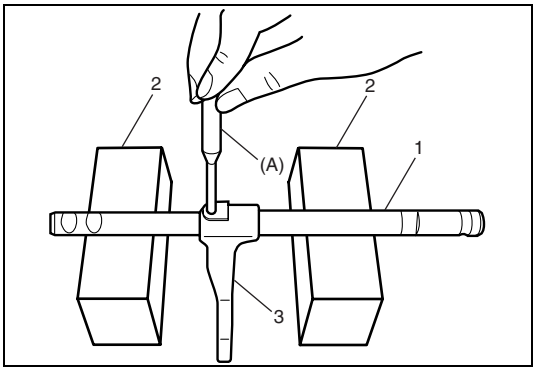

1) Push spring pin using special tool.

Special tool
(A): 09900-06108

CAUTION:
Support reduction shift shaft (1) with wood blocks (2) as shown in figure in order to prevent it from damage.

2) Remove high & low shift fork (3) from reduction shift shaft.

Reassembly

Reverse disassembly procedure for reassembly noting the following point.

- Push spring pin until it becomes flush with high & low shift fork surface.

Reduction Shift Shaft Assembly Inspection

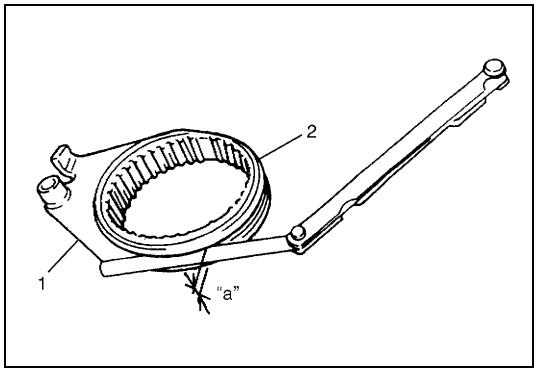

- Using feeler gauge, check clearance between high & low shift fork (1) and reduction clutch sleeve (2).
  If clearance "a" is out of specification, replace reduction clutch sleeve and high & low shift fork.

Clearance Between Reduction Clutch Sleeve and High & Low Shift Fork "a": 0.1 – 0.4 mm (0.004 – 0.015 in.)

Front Drive Shift Shaft Assembly Disassembly and Reassembly

Disassembly

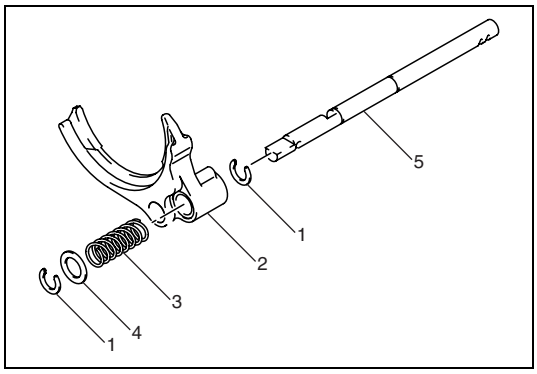

1) Remove snap rings (1), front drive gear shift fork (2), spring (3) and washer (4) from drive shift shaft (5).

Reassembly

Reverse disassembly procedure for reassembly noting the following point.

- Apply transfer gear oil to sliding part.
- Confirm that snap ring is installed in groove securely.

Front Drive Shift Shaft Assembly Inspection

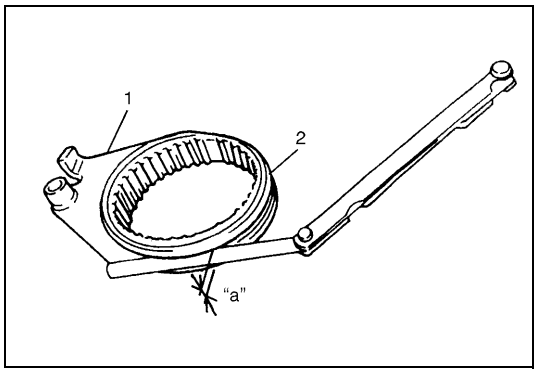

- Using feeler gauge, check clearance between front drive gear shift fork (1) and front drive clutch hub sleeve (2).
  If clearance "a" is out of specification, replace front drive clutch hub sleeve and front drive gear shift fork.

Clearance Between Front Drive Clutch Hub Sleeve and Front Drive Gear Shift Fork "a":
0.15 – 0.35 mm (0.006 – 0.013 in.)

Transfer Output Rear Shaft Assembly Disassembly and Reassembly

Disassembly

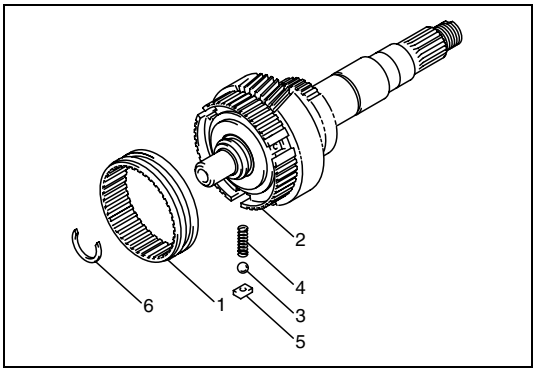

1) Pull out front drive clutch hub sleeve (1) from front drive clutch hub (2) gradually with holding down steel balls (3) in order to prevent steel balls and springs (4) from jumping out.
2) Remove snap ring (6) from output rear shaft.

5. Key

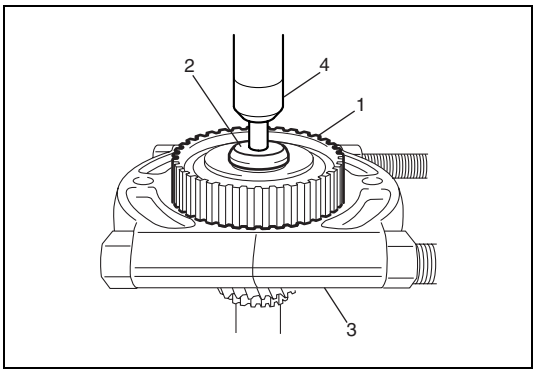

3) Drive out output low gear (1) from output rear shaft (2) using bearing puller (3) and hydraulic press (4).

CAUTION:
To avoid gear teeth from being damaged, support it at flat side of bearing puller.

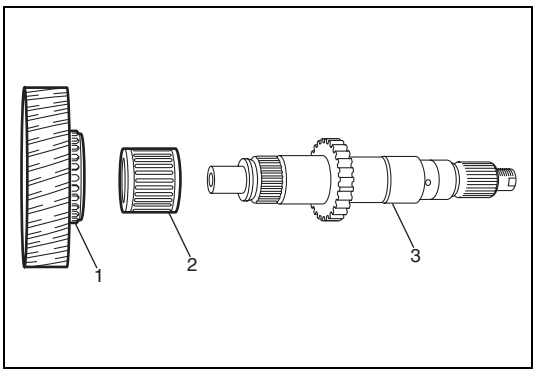

4) Remove output low gear (1) and needle roller bearing (2) from output rear shaft (3).

Reassembly

NOTE:

Install front drive clutch hub and front drive clutch hub sleeve, and check to move smoothly.

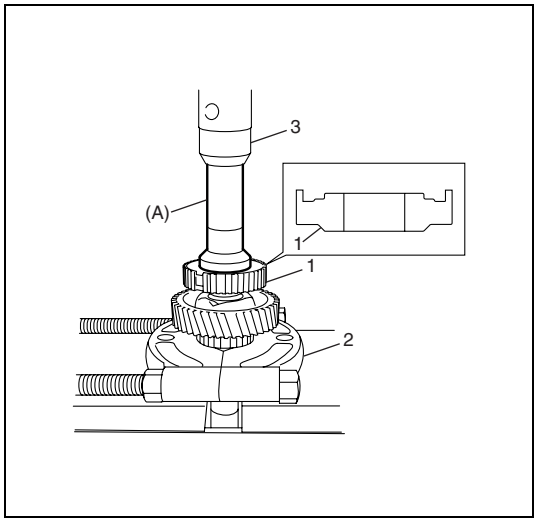

1) Press fit front drive clutch hub (1) using special tool, bearing puller (2) and hydraulic press (3).

Special tool
(A): 09913-70123

CAUTION:

To avoid gear teeth from being damaged, support it at flat side of bearing puller.

NOTE:

Be sure to install front drive clutch hub (1) to proper direction as shown in figure.

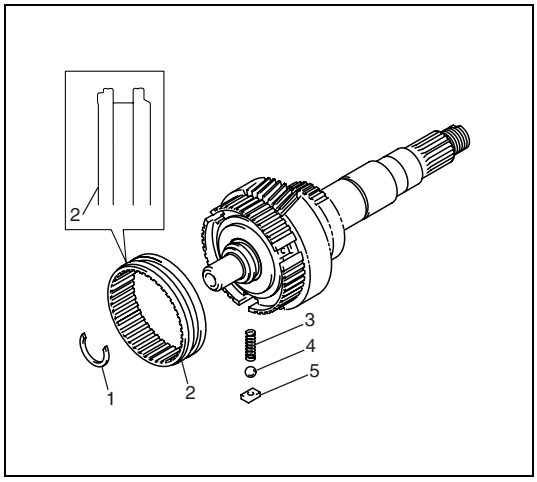

2) Install front drive clutch hub sleeve (2), and then install steel balls (4), key springs (3) and keys (5).

NOTE:

Be sure to install front drive clutch hub sleeve (2) to proper direction as shown in figure.

3) Install applicable output shaft snap ring (1) according to "Output Shaft Snap Ring Adjustment" in this section.

NOTE:

After assembly check that each gear moves smoothly.

Transfer Output Front Shaft Assembly Disassembly and Reassembly

Disassembly

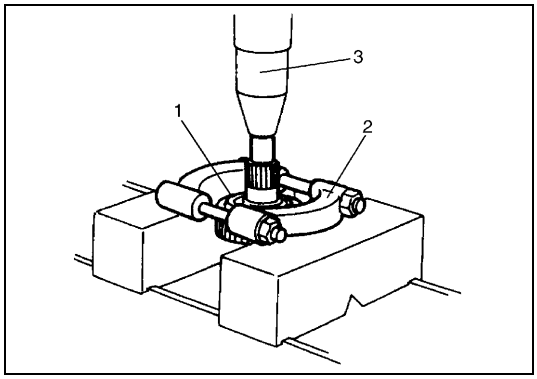

1) Pull out output front shaft bearing (1) using bearing puller (2) and hydraulic press (3).

Reassembly

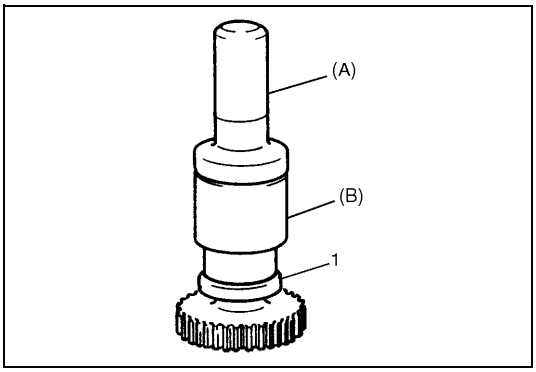

1) By using special tools and hydraulic press, install output front shaft bearing (1) to output front shaft.

Special tool
(A): 09913-75520
(B): 09940-53111

Output Shaft Snap Ring Adjustment

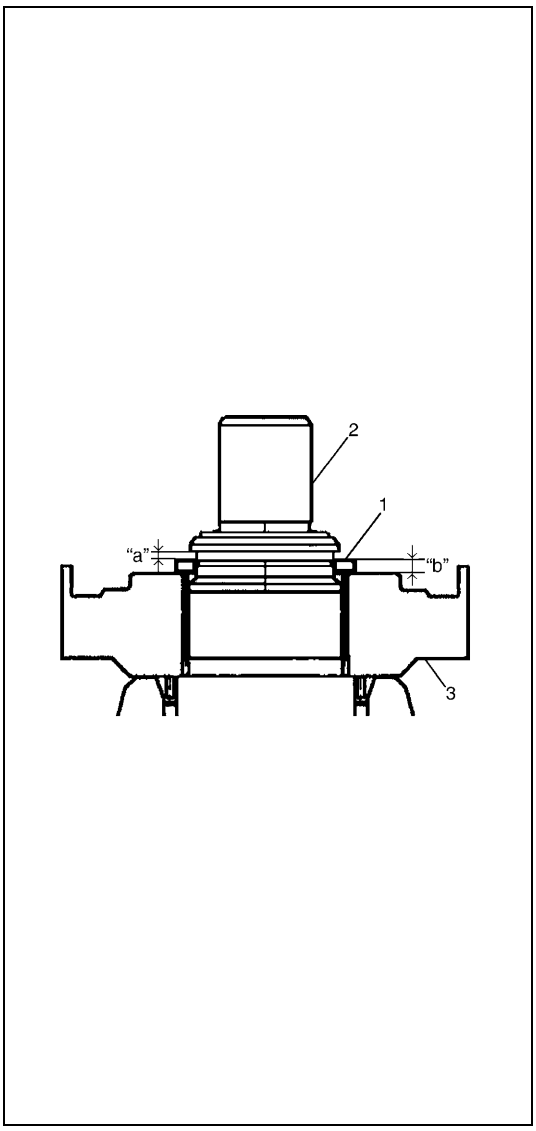

1) Install removed output shaft snap ring to output shaft.
2) Measure clearance "a" between snap ring (1) and end face of output rear shaft (2).
3) Remove snap ring, and then measure removed snap ring thickness "b".
4) Obtain adjusting snap ring thickness "c" by the following equation.

"c" = "a" + "b" – 0.05 mm (0.002 in.)

5) Select snap ring with a thickness nearest calculated snap ring thickness "c" by the following.
6) Install selected snap ring to output shaft.
7) Check clearance "a" between snap ring and end face of output rear shaft, again. If it is more than 0.11 mm (0.004 in.), repeat step 2) through 7).

Available snap ring thickness

Identification mark	Thickness
0	2.30 mm (0.091 in.)
1	2.36 mm (0.093 in.)
2	2.42 mm (0.095 in.)
3	2.48 mm (0.098 in.)
4	2.54 mm (0.100 in.)
5	2.60 mm (0.102 in.)
6	2.12 mm (0.083 in.)
7	2.18 mm (0.086 in.)
8	2.24 mm (0.088 in.)

3. Front drive clutch hub

Tightening Torque Specification

Fastening part	Tightening torque		
	N•m	kg-m	lb-ft
Oil filler / level and drain plug	23	2.3	17.0
Transfer mounting nut	30	3.0	22.0
Transfer mounting bracket bolt	23	2.3	17.0
Propeller shaft bolt	50	5.0	36.5
Flange nut	130	13.0	94.0
Transfer case bolt	18	1.8	13.0
4WD switch	19	1.9	14.0
Locating spring bolt	25	2.5	18.0
Retainer bolt	18	1.8	13.0
VSS bolt	5	0.5	3.5
Transfer oil protect plat bolt	5	0.5	3.5
Locating plug	18.2	1.82	13.0

Required Service Material

Material	Recommended SUZUKI products (Part Number)	Use
Lithium grease	SUZUKI SUPER GREASE A (99000-25010)	• Oil seal lip • O-ring
Sealant	SUZUKI BOND NO. 1217G (99000-31260)	• Mating surface of front case

Special Tool

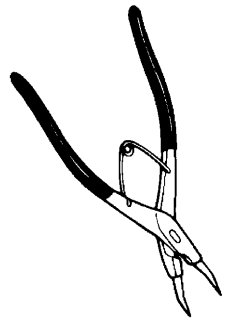 09900-06108 Snap ring plier (Closing type)	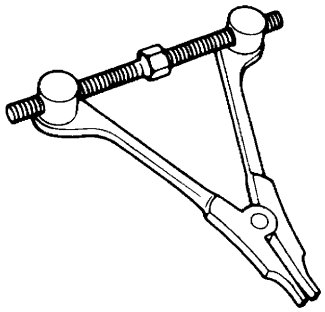 09912-34510 Separator	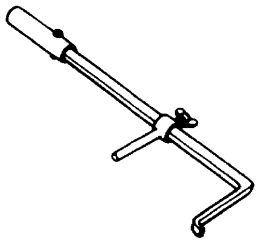 09913-50121 Oil seal remover	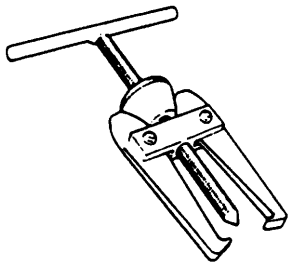 09913-60910 Bearing puller
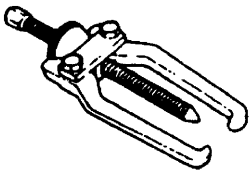 09913-65135 Bearing puller	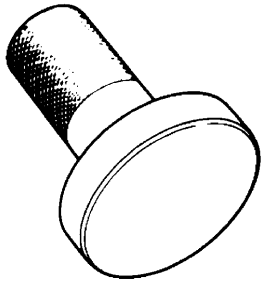 09913-75520 Bearing installer	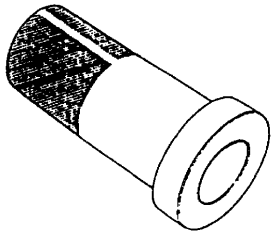 09913-75810 Bearing installer	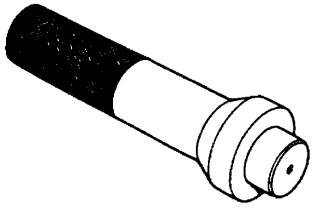 09913-75830 Bearing installer
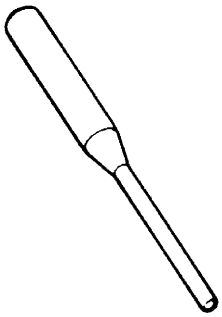 09922-85811 Pin remover	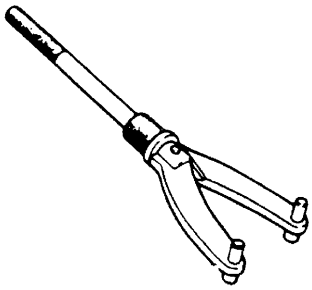 09930-40113 Flange holder	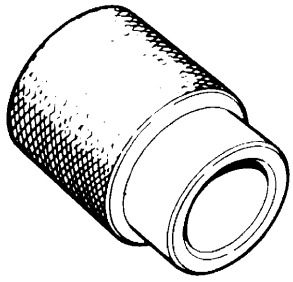 09940-53111 Differential side bearing installer	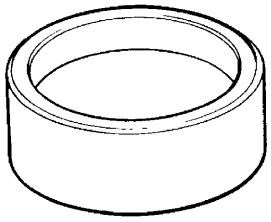 09944-66020 Bearing installer

SECTION 8

BODY ELECTRICAL SYSTEM

WARNING:

For vehicles equipped with Supplement Restraint (Air Bag) System:

- **Service on and around the air bag system components or wiring must be performed only by an authorized SUZUKI dealer. Refer to "Air Bag System Components and Wiring Location View" under "General Description" in air bag system section in order to confirm whether you are performing service on or near the air bag system components or wiring. Please observe all WARNINGS and "Service Precautions" under "On-Vehicle Service" in air bag system section before performing service on or around the air bag system components or wiring. Failure to follow WARNINGS could result in unintentional activation of the system or could render the system inoperative. Either of these two conditions may result in severe injury.**
- **Technical service work must be started at least 90 seconds after the ignition switch is turned to the "LOCK" position and the negative cable is disconnected from the battery. Otherwise, the system may be activated by reserve energy in the Sensing and Diagnostic Module (SDM).**

NOTE:

For the items with asterisk (*) in the "CONTENTS" below, refer to the same section of the Service Manual mentioned in "FOREWORD" of this manual.

CONTENTS

Diagnosis 8-3
- Headlight ..... *
- Headlights with Leveling System (If Equipped) ..... *
- Rear Fog Light (If Equipped) ..... *
- Turn Signal and Hazard Warning Lights ..... *
- Clearance, Tail and License Plate Lights ..... *
- Back-up Light ..... *
- Brake Lights ..... *
- Tachometer and ECM ..... *
- Speedometer and VSS ..... *
- Fuel Meter and Fuel Gauge Unit ..... *
- Engine Coolant Temp. (ECT) Meter and ECT Sensor ..... *
- Oil Pressure Light ..... *
- Brake and Parking Brake Warning Light 8-3
- Rear Window Defogger (If Equipped) ..... *
- Front Wiper and Washer ..... *
- Rear wiper and washer (If equipped) ..... *
- Power Window Control System (If Equipped) ..... *
- Power Door Lock System (If Equipped) ..... *
- Power Door Mirror Control System ..... *
- Door Mirror Heater (If Equipped) ..... *
- Front Seat Heater (If Equipped) ..... *
- Cigarette Lighter ..... *
- Interior Lights ..... *

On-Vehicle Service 8-4
- Headlight ..... *
  - Headlight switch ..... *
  - Headlight ..... *
  - Bulb replacement ..... *
  - Headlight aiming adjustment with screen ..... *
- Headlights with Leveling System (If Equipped) ..... *
  - Leveling switch ..... *
  - Leveling actuator ..... *
- Turn Signal and Hazard Warning Lights System 8-4
  - Turn signal and hazard warning lights system circuit inspection 8-4
  - Turn signal light switch ..... *
  - Hazard switch ..... *
- Stop (Brake) Lamp 8-5
  - Stop (brake) lamp switch 8-5
- Rear Fog Light (If Equipped) ..... *
  - Rear fog light switch ..... *
- Ignition Switch ..... *
- Combination Meter 8-6
  - Fuel level meter ..... *
  - Fuel sender gauge 8-8
- Engine Coolant Temperature Meter and Sensor Unit 8-8

Engine coolant temperature meter ..... *
Engine coolant temperature sensor 8-8
Oil Pressure Warning Light 8-9
Oil pressure switch 8-9
Brake and Parking Brake Warning Light 8-9
Brake fluid level switch ..... *
Parking brake switch ..... *
Indicator controller (for brake warning light) 8-9
Brake vacuum switch 8-10
Rear Window Defogger ..... *
Defogger switch ..... *
Defogger wire ..... *
Wiper and Washer 8-10
Front wiper/washer switch ..... *
Wiper motor ..... *
Washer pump 8-11
Rear Wiper and Washer ..... *
Wiper and washer switch ..... *
Rear wiper motor ..... *
Rear wiper intermittent relay ..... *
Power Window Control System (If Equipped) ..... *
Breaker ..... *
Power window main switch ..... *
Power Door Lock System (If Equipped) 8-12
Power door lock system component location ..... *
Power door lock system operation inspection ..... *
Power door lock system circuit inspection 8-12
Driver side key cylinder switch ..... *
Power door lock actuator ..... *
Door switch ..... *
Power Door Mirror Control System (If Equipped) ..... *
Mirror switch ..... *
Door mirror actuator ..... *
Door Mirror Heater (If Equipped) ..... *
Mirror heater switch ..... *
Mirror heater (if equipped) ..... *
Front Seat Heater (If Equipped) ..... *
Seat heater switch (driver and passenger side) ..... *
Seat heater wire ..... *

Diagnosis

Brake and Parking Brake Warning Light

Condition	Possible Cause	Correction
Brake warning light does not light up when brake fluid level is low and/or parking brake is pulled up	Bulb in combination meter blown	Check bulb.
	"Meter" fuse blown	After checking short circuit, replace fuse.
	Printed wiring circuit in combination meter	Check printed wiring circuit in combination meter.
	Brake fluid level switch faulty	Check brake fluid level switch referring to "Brake Fluid Level Switch" in this section.
	Parking brake switch faulty	Check parking brake switch referring to "Parking Brake Switch" in this section.
	Wiring or grounding faulty	Repair circuit.
Brake warning light does not light up when cranking engine (when ignition switch is at ST position)	Ignition switch faulty	Check ignition switch referring to "Ignition Switch" in this section.
	Wiring or grounding faulty	Repair circuit.
	Printed wiring circuit in combination meter	Check printed wiring circuit in combination meter.
Brake warning light does not light up for 1 – 3 sec. after ignition switch ON	Bulb in combination meter blown	Check bulb.
	"Meter" fuse blown	After checking short circuit, replace fuse.
	Printed wiring circuit in combination meter	Check printed wiring circuit in combination meter.
	Indicator controller faulty	Check indicator controller referring to "Indicator Controller (For Brake Warning Light)" in this section.
	Wiring or grounding faulty	Repair circuit.
Brake warning light stays ON	Brake fluid level switch faulty	Check brake fluid level switch referring to "Brake Fluid Level Switch" in this section.
	Parking brake switch faulty	Check parking brake switch referring to "Parking Brake Switch" in this section.
	Indicator controller faulty	Check indicator controller referring to "Indicator Controller (For Brake Warning Light)" in this section.
	Wiring or grounding faulty	Repair circuit.
	Printed wiring circuit in combination meter	Check printed wiring circuit in combination meter.
	Brake vacuum switch faulty	Check brake vacuum switch referring to "Brake Vacuum Switch" in this section.
	Poor vacuum pressure	Check vacuum circuit and vacuum pump referring to "Vacuum Pump Inspection" in Section 6H2.

On-Vehicle Service

Turn Signal and Hazard Warning Lights System

Turn signal and hazard warning lights system circuit inspection

1) Disconnect negative (–) cable from battery.

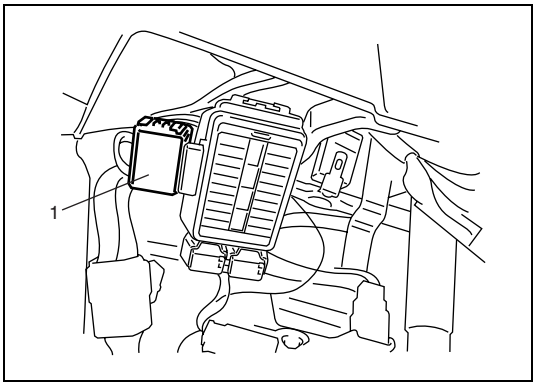

2) Disconnect turn signal and hazard warning relay (1) connector.

3) Connect negative (–) cable to battery.

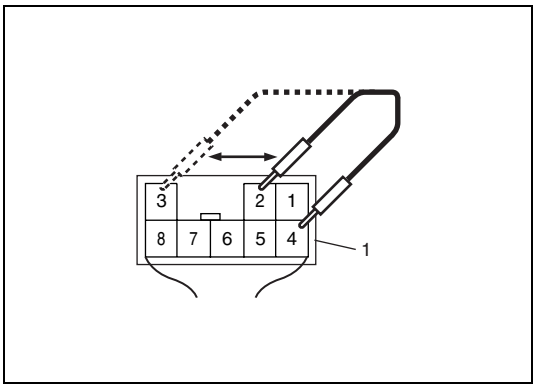

4) Confirm that right or left side turn signal light turn on when connect “4” terminal to “2” or “3” terminal with service wire.
   If turn signal light does not turn on, check bulb or repair applicable circuit.

1. Turn signal and hazard warning relay connector viewed from harness side

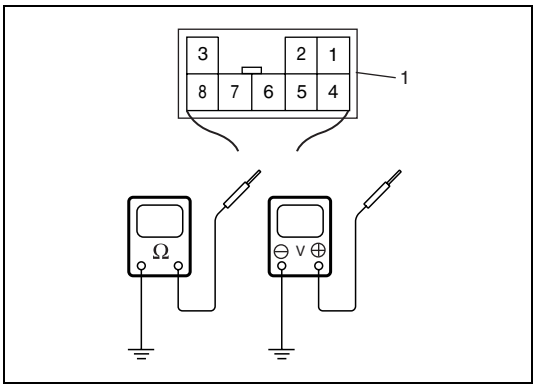

5) Check that voltage and continuity between the following terminals and body ground are specifications under each condition.
   If check result is not as specified, repair applicable circuit.
   If check result is OK, replace turn signal and hazard warning relay and recheck.

1. Turn signal and hazard warning relay connector viewed from harness side

Terminal	Circuit	Specification	Condition
1	Ignition switch circuit	10 – 14 V	Ignition switch is ON position.
		0 – 1 V	Ignition switch is OFF position.
4	Power supply for turn signal and hazard warning lights	10 – 14 V	–
5	Right side turn signal light switch circuit	Continuity	Turn signal light switch is R position.
		No continuity	Turn signal light switch is N or L position.
6	Left side turn signal light switch circuit	Continuity	Turn signal light switch is L position.
		No continuity	Turn signal light switch is N or R position.
7	Ground	0 – 1 V	–
8	Hazard warning switch circuits	Continuity	Hazard warning switch is ON position.
		No continuity	Hazard warning switch is OFF position.

Stop (Brake) Lamp

Stop (brake) lamp switch

Inspection

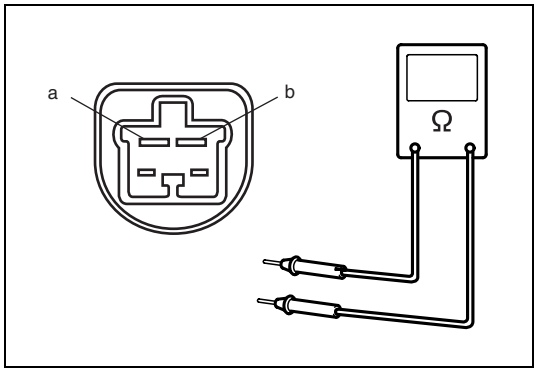

Check stop (brake) lamp switch for continuity as shown below.
If check result is not as specified, replace switch.

Shaft condition \ Terminal	a	b
FREE	○	○
PUSH		

Combination Meter

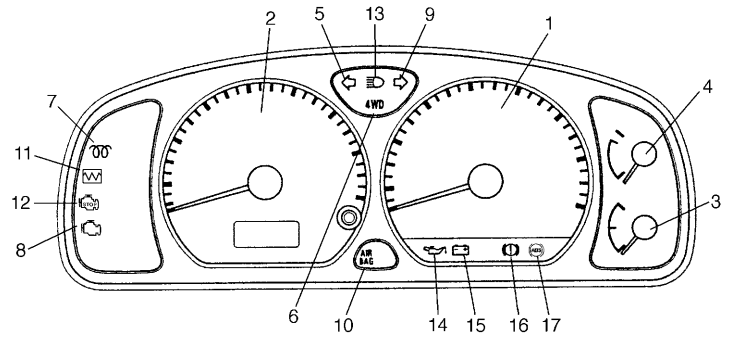

1. Tachometer	7. Glow indicator light	13. High beam light
2. Speedometer	8. MIL	14. Oil pressure warning light
3. Fuel lever meter	9. Turn signal pilot light (RH)	15. Charge warning light
4. Water temperature meter	10. AIR BAG warning light	16. Brake warning light
5. Turn signal pilot light (LH)	11. Injection warning light (gravity 1 warning light)	17. ABS warning light (if equipped)
6. 4WD indicator	12. Red stop warning light (gravity 2 warning light)	

COMBINATION METER INTERNAL CIRCUITS AND COUPLERS

NOTE:

Terminal arrangement of coupler viewed from harness side.

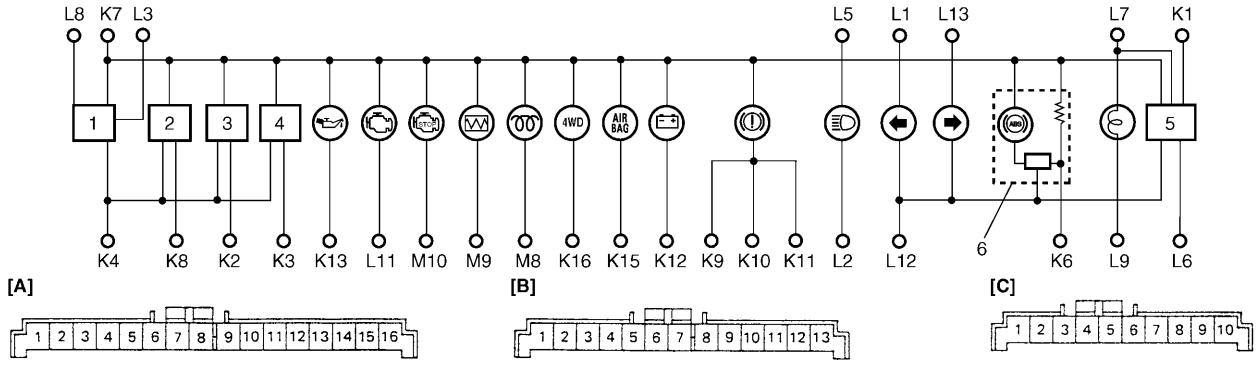

1. Speedometer	4. Engine coolant temp. meter	[A]: Connector K
2. Tachometer	5. Buzzer	[B]: Connector L
3. Fuel meter	6. If equipped	[C]: Connector M

Terminal K	Wire Color	Circuit
K-1	BLU/GRN	To ignition switch
K-2	YEL/RED	To fuel level gauge
K-3	YEL/WHT	To ECT sensor
K-4	BLK/ORN	To ground
K-5	–	–
K-6	RED/BLU	To ABS control module (if equipped)
K-7	BLK/RED	To ignition switch
K-8	BRN	To ECM
K-9	PPL/RED	To ignition switch
K-10	RED BLK	To brake fluid level switch and brake vacuum switch
K-11	RED/BLK	To parking brake switch and indicator controller
K-12	WHT/RED	To generator
K-13	YEL/BLU	To oil pressure switch
K-14	–	–
K-15	BLU	To SDM
K-16	BLU	To 4WD control module

Terminal L	Wire Color	Circuit
L-1	GRN/RED	To combination switch (turn L)
L-2	RED	To combination switch (dimmer switch)
L-3	YEL/GRN	To VSS
L-4	–	–
L-5	WHT/BLU	To main fuse
L-6	BLK/YEL	To door switch
L-7	RED/YEL	To combination switch (dimmer switch)
L-8	WHT	To main fuse
L-9	BLK	To ground
L-10	–	–
L-11	PPL/YEL	To ECM
L-12	BLK	To ground
L-13	GRN/YEL	To combination switch (turn R)

Terminal M	Wire Color	Circuit
M-1	–	–
M-2	–	–
M-3	–	–
M-4	–	–
M-5	–	–
M-6	–	–
M-7	–	–
M-8	GRN/YEL	To ECM
M-9	WHT/RED	To ECM
M-10	WHT/BLK	To ECM

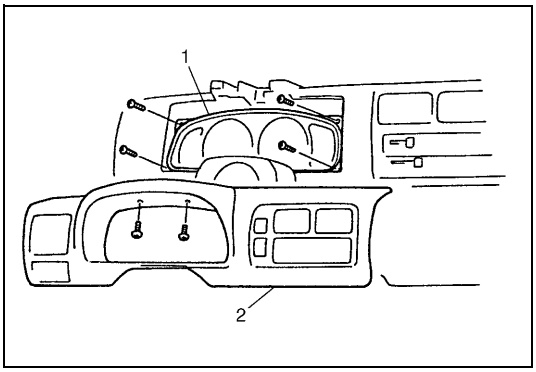

Removal

1) Disconnect negative cable at battery.
2) Loosen steering column mounting bolts and nuts referring to "Steering Column Assembly" in Section 3C.
3) Remove meter cluster panel (2).
4) Remove combination meter (1).
5) Disconnect couplers from combination meter.

Installation

Reverse removal procedure for installation.

Fuel sender gauge

Inspection

1) Remove fuel level gauge assembly referring to "Fuel Level Gauge Assembly Removal and Installation" in Section 6C2.
2) Use an ohmmeter to confirm that resistance of sender gauge unit changes with change of float position. If the measured value is out of specification, replace.

Fuel sender gauge specification

Float Position		Resistance (Ω)
Full Upper "a"	87.2 mm (3.60 in.)	2 – 4
Middle (1/2) "b"	150.0 mm (5.91 in.)	29.5 – 35.5
Full Lower "c"	254.6 mm (10.02 in.)	119 – 121

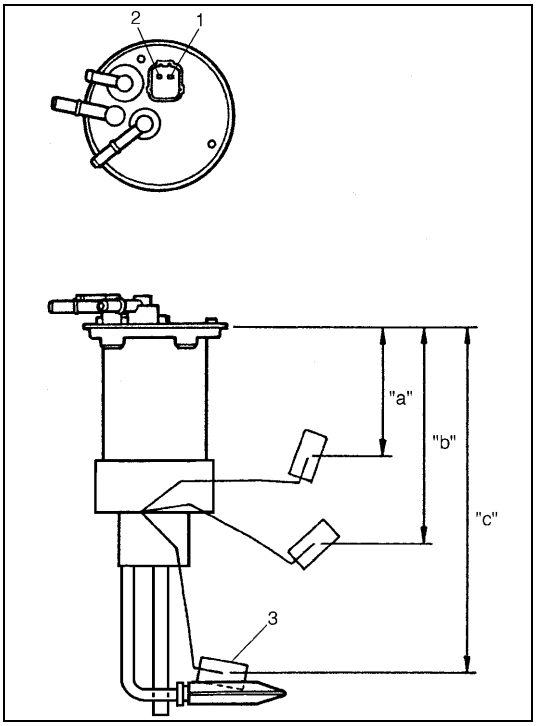

1. Fuel level gauge "+" terminal
2. Fuel level gauge "–" terminal
3. Float

Engine Coolant Temperature Meter and Sensor Unit

Engine coolant temperature sensor

Removal/Installation/Inspection

Refer to "Engine Coolant Temperature Sensor (ECT Sensor) Removal and Installation" in Section 6E2.

Oil Pressure Warning Light

Oil pressure switch

Inspection

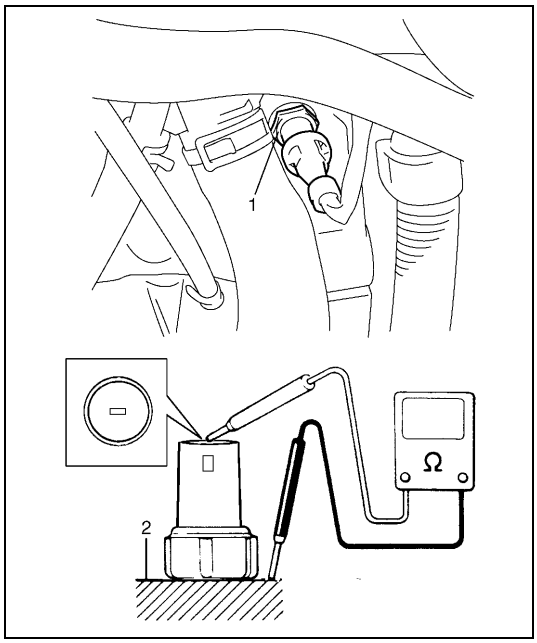

Use an ohmmeter to check switch continuity.

Oil pressure switch specification
During Engine Running: No continuity (∞ Ω)
At Engine Stop: Continuity (0 Ω)

1. Oil pressure switch
2. Cylinder block

Removal and Installation

Refer to “Oil Pressure Switch Removal and Installation” in Section 6A2.

Brake and Parking Brake Warning Light

Indicator controller (for brake warning light)

Inspection

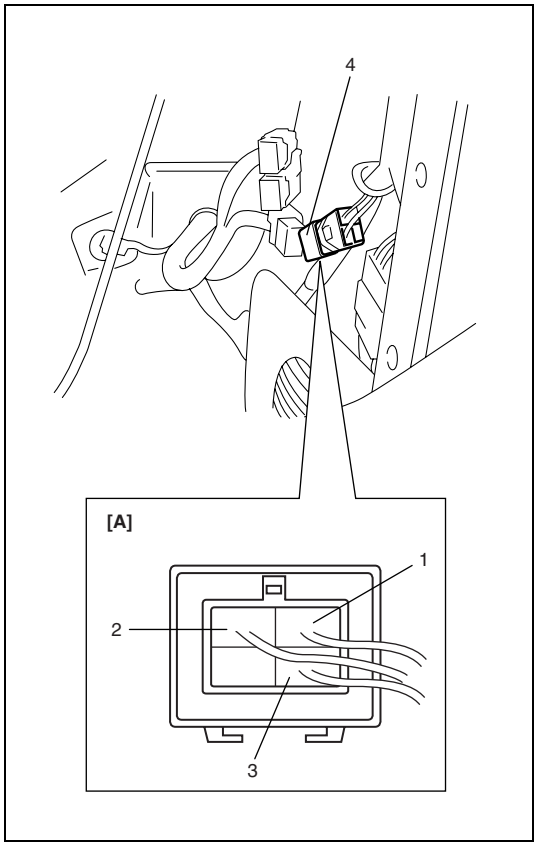

1) Remove glove box.
2) Check voltage between terminal wire (1) and (3).
   If voltage is not as specified, check relative wiring circuit to open or short.
   If voltage is specified, go to next step.

   Ignition switch ON: 10 – 14 V

3) Check voltage between terminal wire (2) and ground.
   If voltage is not as specified, replace controller.

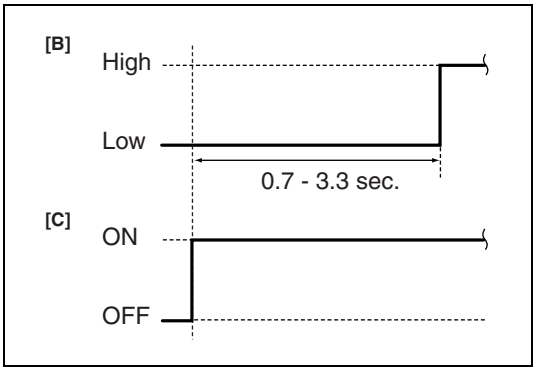

[A]: View from harness side
[B]: Voltage between “2” and ground
[C]: Ignition switch
4. Indicator controller

Brake vacuum switch

Inspection

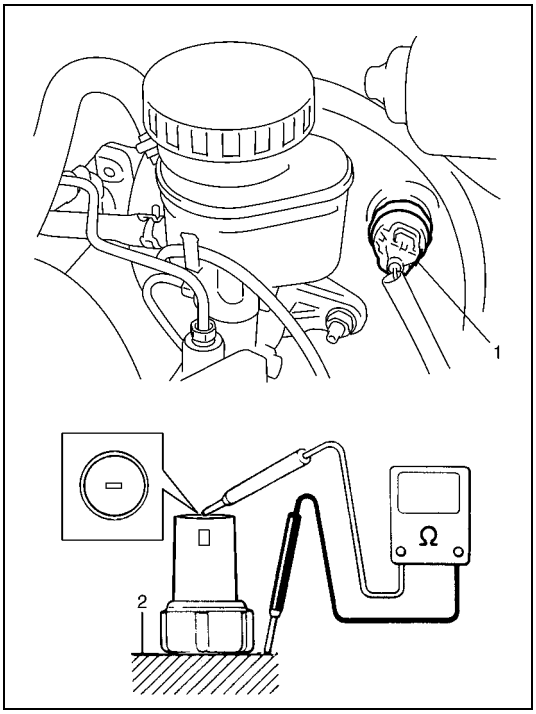

Use an ohmmeter to check switch continuity.

Brake vacuum switch specification
Atmosphere pressure: Continuity (0 Ω)
Vacuum lower than –27.0 kPa (38 Psi): No continuity (∞ Ω)

If continuity is not as specified, replace master cylinder booster assemby including brake vacuum switch.

1.	Brake vacuum switch
2.	Body earth

Wiper and Washer

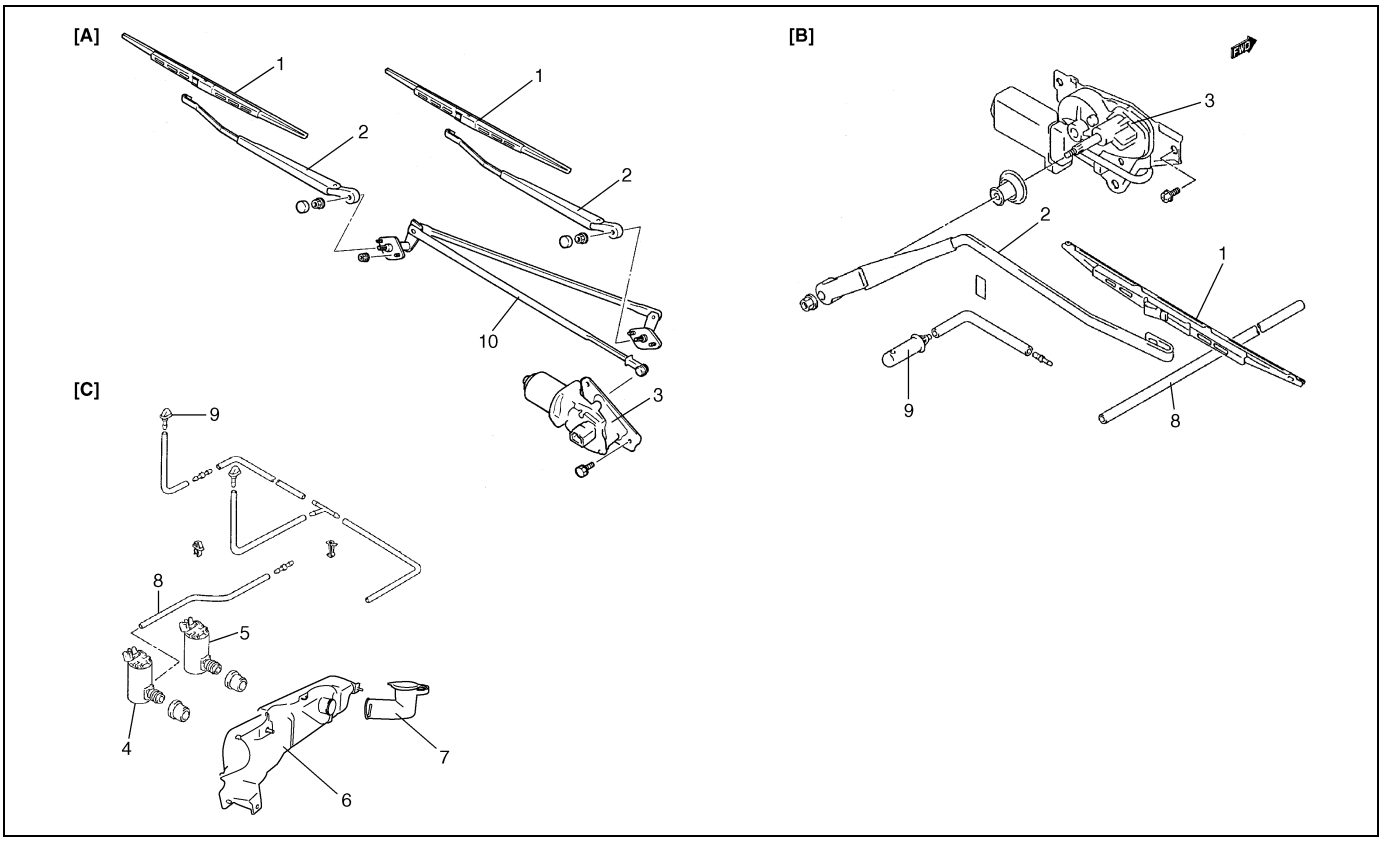

[A]: Front wiper	1. Wiper blade	4. Front washer pump	7. Washer inlet pipe	10. Wiper link
[B]: Rear wiper	2. Wiper arm	5. Rear washer pump	8. Washer hose	
[C]: Washer	3. Wiper motor	6. Washer tank	9. Washer nozzle	

Washer pump

Removal

1) Disconnect negative (–) cable at battery.
2) Remove front left side fender lining.

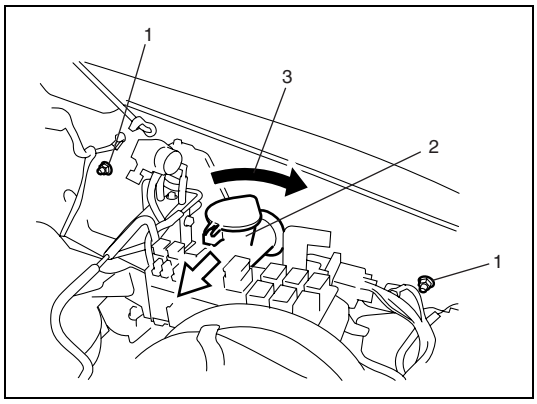

3) Remove washer tank fitting nuts (1) and clip.
4) Turn washer inlet pipe (2) to the arrow direction (3), and then pull it out.
5) Disconnect pump lead wire connector, hoses and side turn signal lamp connector.
6) Remove washer tank.

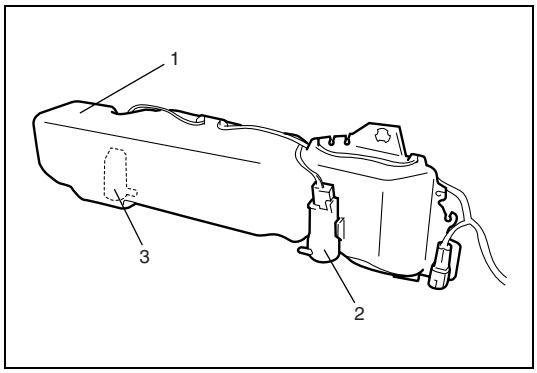

7) Remove washer pump from washer tank (1).

2.	Front washer pump
3.	Rear washer pump

Inspection

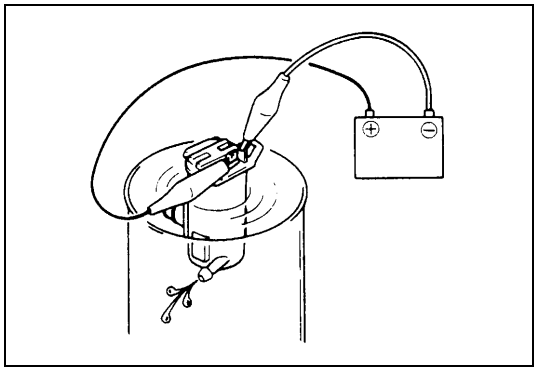

Connect battery (+) and (–) terminals to pump (+) and (–) terminals respectively to check pumping rate.
Check for both front and rear washer pump.

Pumping Rate
Front washer pump
: more than 1.0 l/min (2.1 US pt./min, 1.76 Imp pt./min)
Rear washer pump
: more than 1.0 l/min (2.1 US pt./min, 1.76 Imp pt./min)

Installation

Reverse removal procedure for installation.

Power Door Lock System (If Equipped)

Power door lock system circuit inspection

1) Disconnect negative (–) cable at battery.
2) Disconnect door lock controller coupler (1).
3) Confirm that all doors are unlocked. Connect battery positive (+) and negative (–) terminals to door lock controller coupler terminals and check power door lock operation as follows.
   If it does not operate as specified, repair applicable circuit or check actuator. If it operates as specified, go to next step.

Power door lock operation for vehicle:

Step	TERMINAL		OPERATION
	10	11	
1	⊕	⊖	UNLOCK ⟶ LOCK
2	⊖	⊕	LOCK ⟶ UNLOCK

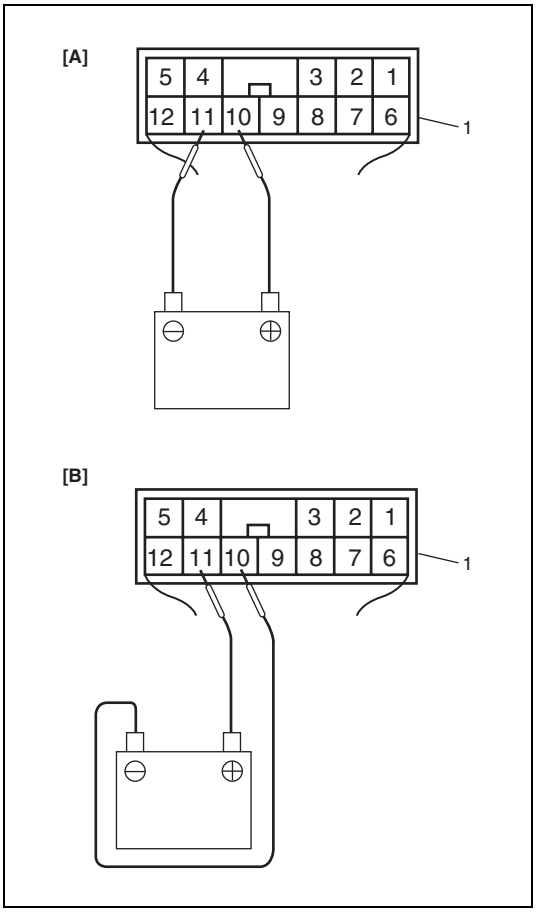

[A]: Step 1: Lock operation check
[B]: Step 2: Unlock operation check

1. Power door lock controller coupler viewed from harness side

4) Connect negative (–) cable to battery.
5) Check that the voltage and continuity between the following terminals and body ground are specifications under each conditions.
   If check result is not as specified, repair circuit.
   If check result is OK, recheck power door lock system as follows.
   a) Substitute a known-good door lock controller.
   b) Recheck power door lock system circuit.

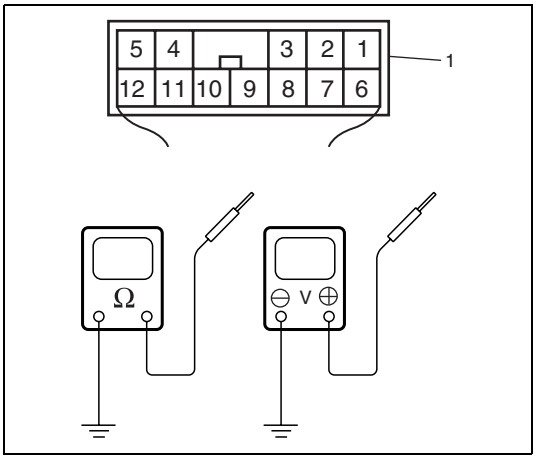

1: Power door lock controller coupler viewed from harness side

Terminal	Circuit	Specification	Condition
7	Main power supply	10 – 14 V	–
8	Driver side door knob switch lock signal circuit	Continuity	Driver side door knob switch is lock position.
		No continuity	Driver side door knob switch is unlock position.
9	Driver side door knob switch unlock signal circuit	Continuity	Driver side door knob switch is unlock position.
		No continuity	Driver side door knob switch is lock position.
12	Ground	0 – 1 V	–

SECTION 8G2

IMMOBILIZER CONTROL SYSTEM

WARNING:

For vehicles equipped with a Supplemental Restraint (Air Bag) System:

- **Service on and around the air bag system components or wiring must be performed only by an authorized SUZUKI dealer. Refer to "Air Bag System Components and Wiring Location View" under "General Description" in air bag section in order to confirm whether you are performing service on or near the air bag system components or wiring. Please observe all WARNINGs and "Service Precautions" under "On-Vehicle Service" in air bag system section before performing service on or around the air bag system components or wiring. Failure to follow WARNINGs could result in unintentional activation of the system or could render the system inoperative.**
  Either of these two conditions may result in severe injury.
- **Technical service work must be started at least 90 seconds after the ignition switch is turned to the "LOCK" position and the negative cable is disconnected from the battery. Otherwise, the system may be activated by reserve energy in the Sensing and Diagnostic Module (SDM).**

CONTENTS

General Description 8G2-2
- Immobilizer Control System Description 8G2-2
- Immobilizer Control System Wiring Circuit Diagram 8G2-2
- Immobilizer Control System Components Location 8G2-3
- On-Board Diagnostic System Description 8G2-3

Diagnosis 8G2-4
- Precautions in Diagnosing Troubles 8G2-4
- Precautions for Replacing ECM or Immobilizer Control Module 8G2-4
- Diagnostic Flow Table 8G2-5
- Diagnostic Trouble Code (DTC) Check 8G2-6
- Diagnostic Trouble Code (DTC) Clearance 8G2-6
- Diagnostic Trouble Code (DTC) Table 8G2-7
- Scan Tool Data 8G2-7
- Inspection of Immobilizer Control Module and Its Circuits 8G2-8
- DTC 16: Communication Line Between Immobilizer Control Module and Coil Antenna Shorted to Ground Circuit or Open 8G2-10
- DTC 21: Communication Line Between Immobilizer Control Module and Coil Antenna Shorted to Power Circuit 8G2-12
- DTC 70: Immobilizer Control Module Internal Failure 8G2-12
- General Troubleshooting of Immobilizer Control System 8G2-13

On-vehicle Service 8G2-15
- Precautions in Handling Immobilizer Control System 8G2-15
- Immobilizer Control Module Removal and Installation 8G2-15
- Coil Antenna Removal and Installation 8G2-16
- Coil Antenna Inspection 8G2-16
- Registration Procedure of Immobilizer Control System Components 8G2-17
  - Procedure to register ignition key 8G2-17
  - Procedure after Immobilizer Control Module replacement 8G2-17
  - Procedure for ECM replacement 8G2-17

Special Tools 8G2-18

General Description

Immobilizer Control System Description

The immobilizer control system is an anti-theft device that immobilizes the vehicle. It stops the engine from working and prevents the vehicle from being stolen. It mainly consists of the following components.

- Engine Control Module (ECM)
- Immobilizer Control Module
- Coil antenna
- Ignition key with the built-in transponder

The transponder code is in the built-in transponder in the ignition key. And, it is registered with Immobilizer Control Module. Basically, when the transponder code in the built-in transponder does not match with the one registered with Immobilizer Control Module, ECM stops the operation of the fuel injector so as not to start up the engine. Otherwise, when Immobilizer Control Module detects some trouble with the immobilizer control system, ECM does the same operation.

Immobilizer Control System Wiring Circuit Diagram

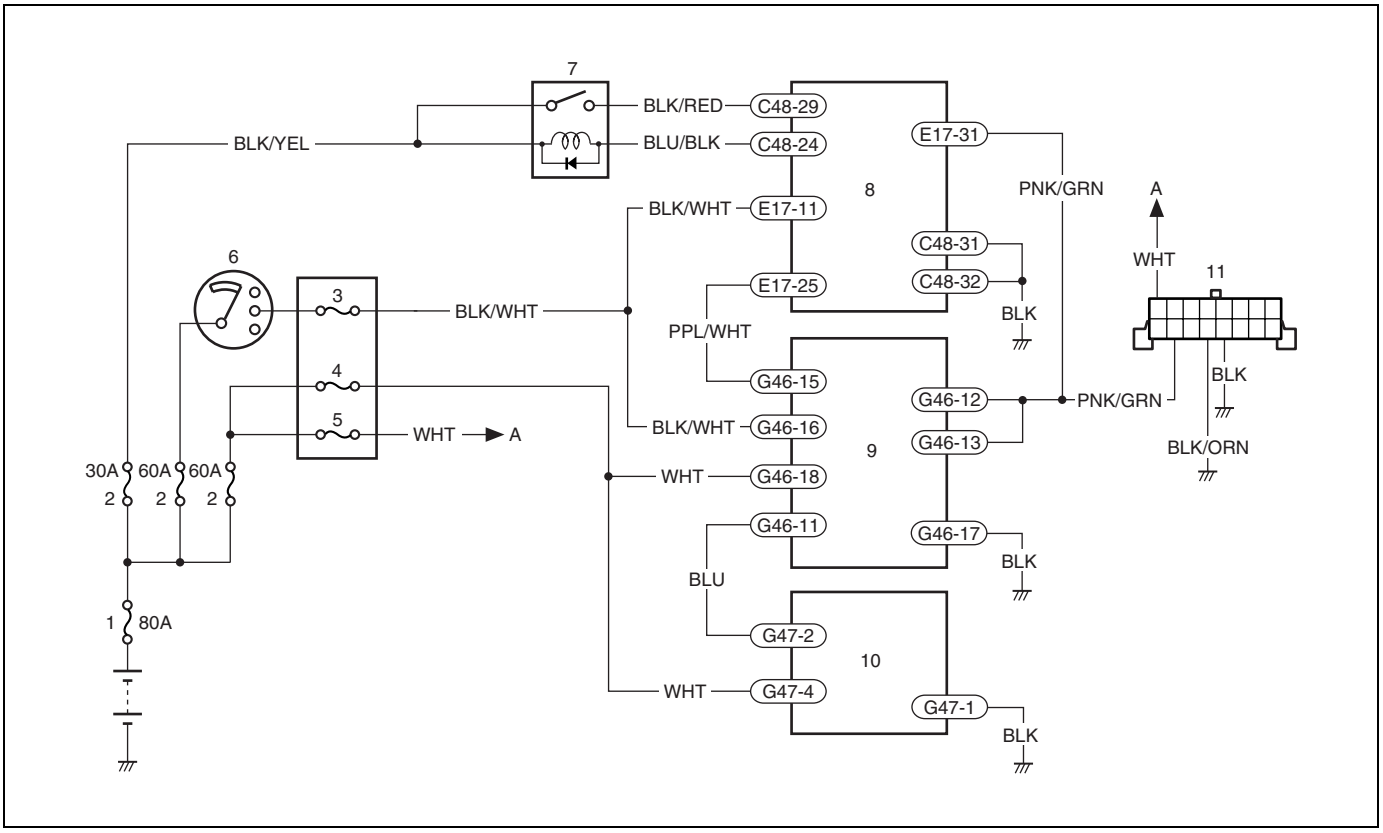

1. Battery	5. "DOME" fuse (15 A)	9. Immobilizer Control Module
2. Fuse	6. Ignition switch	10. Coil antenna
3. "IG-COIL METER" fuse (15 A)	7. Main relay	11. Data link connector (DLC)
4. "IMMOBI" fuse (10 A)	8. ECM	

Immobilizer Control System Components Location

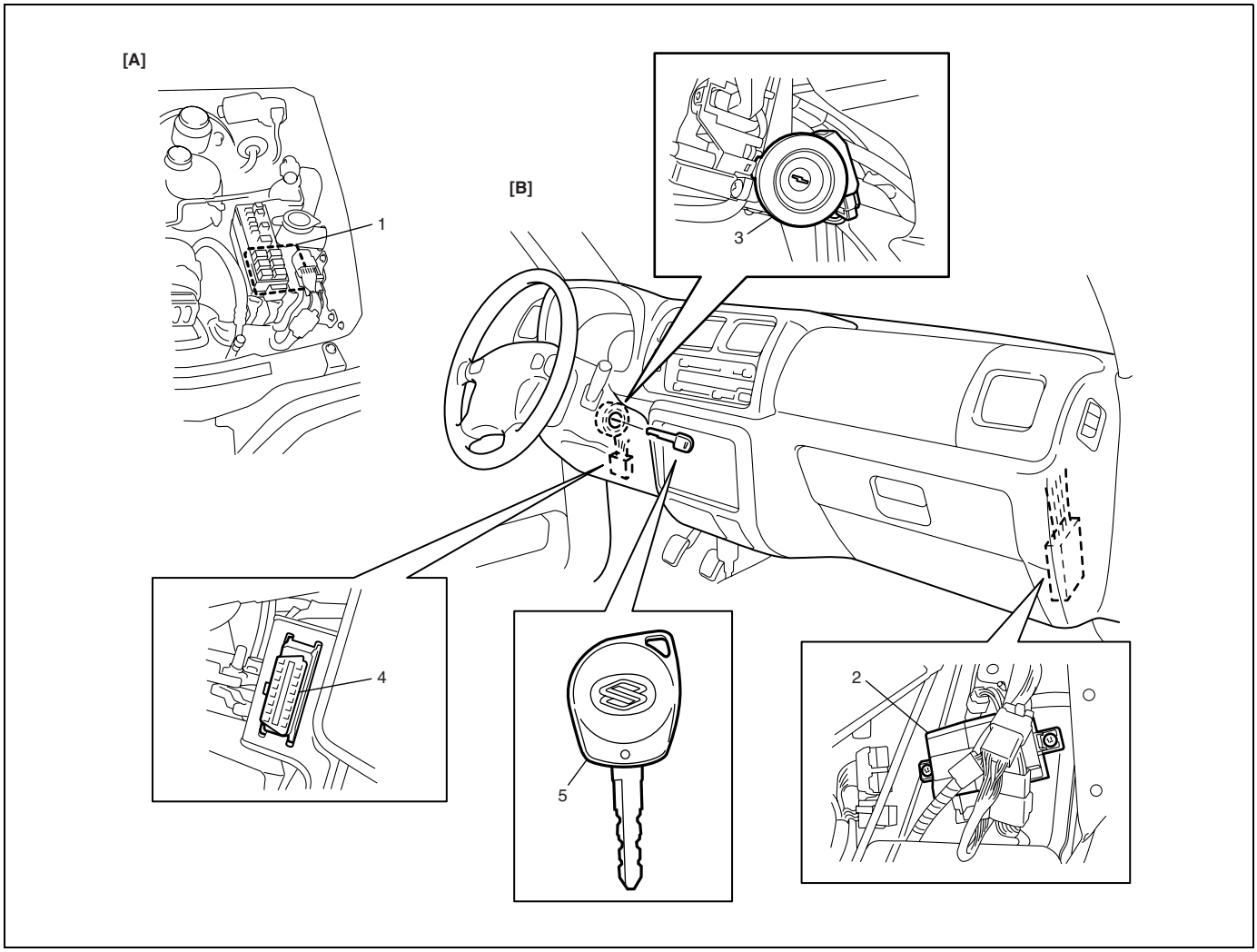

[A]: Engine room	1. ECM	3. Coil antenna	5. Ignition key
[B]: Inside of a vehicle	2. Immobilizer Control Module	4. Data link connector (DLC)	

On-Board Diagnostic System Description

Immobilizer Control Module diagnoses if there is any trouble with the immobilizer control system. In detail, Immobilizer Control Module diagnoses if a communication line between Immobilizer Control Module and coil antenna is normal. When Immobilizer Control Module detects any trouble with the line, ECM stops the operation of the fuel injector. The diagnostic information is stored as the diagnostic trouble code (DTC) in Immobilizer Control Module. To read the diagnostic information, use SUZUKI scan tool referring to “Diagnostic Trouble Code (DTC) Check” in this section.

Diagnosis

Immobilizer Control Module has on-board diagnostic system. Investigate what the trouble is by referring to “Diagnostic Flow Table” and “Diagnostic Trouble Code (DTC) Check” in this section.

Precautions in Diagnosing Troubles

- Before confirming diagnostic trouble code (DTC), do not disconnect connector from Immobilizer Control Module, battery cable from battery, ground wire harness or main fuse.
  Such disconnection will erase DTC stored in Immobilizer Control Module.
- DTC stored in Immobilizer Control Module memory can be cleared as well as checked by using SUZUKI scan tool. Before using SUZUKI scan tool, read its operator’s manual carefully to know what functions are available and how to use it.
- Be sure to read “Precautions for Electrical Circuit Service” in Section 0A before inspection and observe what is written there.
- The data of immobilizer control system is registered with ECM. The data cannot be reprogrammed and is peculiar to each vehicle. Therefore, check for immobilizer control system using the known-good ECM equipped with another vehicle cannot be performed.

Precautions for Replacing ECM or Immobilizer Control Module

- When Immobilizer Control Module is replaced, including when replaced because rechecking by using a known-good Immobilizer Control Module is necessary during trouble diagnosis, ignition keys must be registered with the known-good Immobilizer Control Module by performing procedure described in “Procedure After Immobilizer Control Module Replacement” in this section.
- Before replacing ECM, be sure to read “ECM Registration” and “Engine Control Module (ECM) Removal and Installation” carefully in Section 6E2. And then, follow the instructions described in them.

Diagnostic Flow Table

Perform the flowchart below when the engine can not be started up.

Step	Action	Yes	No
1	Check if any diagnostic trouble code (DTC) is detected in ECM referring to “DTC Check” in Section 6-2. Is any DTC detected?	Perform troubleshooting referring to the corresponding flowchart in Section 6-2, and then start engine. If engine does not start, go to Step 2.	Go to Step 2.
2	Check if any diagnostic trouble code (DTC) is detected in Immobilizer Control Module referring to “Diagnostic Trouble Code (DTC) Check” in this section. Is any DTC detected?	Perform troubleshooting referring to the corresponding flowchart in this section, and then start engine. If engine does not start, go to Step 3.	Go to Step 3.
3	Check if transponder code is detected by Immobilizer Control Module using “Data List” mode of diagnostic software for SUZUKI scan tool. **NOTE:** **To know the definitions of SUZUKI scan tool data, refer to “Scan Tool Data” in this section.** Is transponder code detected by Immobilizer Control Module?	Go to Step 4.	Use ignition key with built-in transponder, which is registered with Immobilizer Control Module. Then, start engine. If engine does not start, go to Step 4.
4	Check if transponder code in ignition key is matched with the one registered with Immobilizer Control Module by using “Data List” mode of diagnostic software for SUZUKI scan tool. **NOTE:** **To know the definitions of SUZUKI scan tool data, refer to “Scan Tool Data” in this section.** Is transponder code matched with the one of registered in Immobilizer Control Module?	Perform “General Troubleshooting of Immobilizer Control System” in this section, and then start engine. If engine does not start, go to “Engine Diagnostic Flow Table” in Section 6-2.	Use ignition key with built-in transponder, which is registered with Immobilizer Control Module. Otherwise, register new ignition keys with Immobilizer Control Module referring to “Procedure to Register Ignition Key” in this section. Then, start engine. If engine does not start, go to “Engine Diagnostic Flow Table” in Section 6-2.

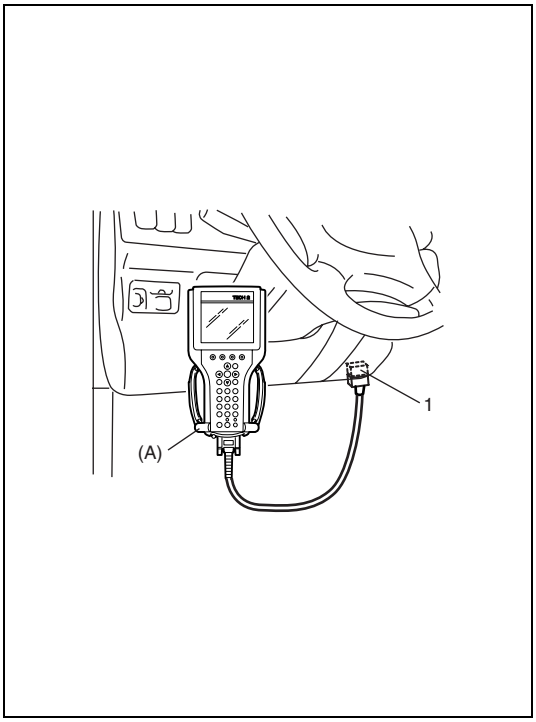

Diagnostic Trouble Code (DTC) Check

1) Prepare SUZUKI scan tool.
2) With ignition switch OFF position, connect SUZUKI scan tool to data link connector (DLC) (1) located under instrument panel at driver's seat side.

Special tool
(A): SUZUKI scan tool

3) Turn ignition switch to ON position.
4) Read DTC according to instructions displayed on SUZUKI scan tool.
   If communication between SUZUKI scan tool and Immobilizer Control Module can not be established, check if SUZUKI scan tool is communicable it to immobilizer control system of another vehicle. If communication is established, SUZUKI scan tool is in good condition. Then, check DLC and serial data line (circuit) in the vehicle with which communication can not be established.
5) After completing the check, turn ignition switch to OFF position, and then disconnect SUZUKI scan tool from DLC.

Diagnostic Trouble Code (DTC) Clearance

1) Connect SUZUKI scan tool to data link connector (DLC) located under instrument panel at driver's seat side.
2) Turn ignition switch to ON position.
3) Clear DTC according to instructions displayed on SUZUKI scan tool.
4) After completing the clearance, turn ignition switch to OFF position, and then disconnect SUZUKI scan tool from DLC.

Diagnostic Trouble Code (DTC) Table

DTC No.	Detected Item	Detecting Condition
16	Communication line between Immobilizer Control Module and coil antenna shorted to ground circuit or open	Communication line between Immobilizer Control Module and coil antenna is shorted to ground circuit or open.
21	Communication line between Immobilizer Control Module and coil antenna shorted to power circuit	Communication line between Immobilizer Control Module and coil antenna is shorted to power circuit.
70	Immobilizer Control Module internal failure	Some internal failure has occurred in Immobilizer Control Module.

Scan Tool Data

As the data value given below are standard values estimated on the basis of values obtained from the normally operating vehicles by using SUZUKI scan tool, use them as reference values. Even when the vehicle is in good condition, there may be cases where the checked value does not fall within normal conditions and reference values. Therefore, judgement as abnormal should not be made by checking with there data alone.
Also, conditions in the table below that can be checked by SUZUKI scan tool are those detected by Immobilizer Control Module and output from Immobilizer Control Module as commands.

Scan Tool Data	Vehicle Condition	Normal Condition/ Reference Values
IGNITION SWITCH	Ignition switch at ON position	ON
TRANSPONDER	Ignition switch at ON position	DETECTED
TRANS CODE	Ignition switch at ON position	MATCHED
SYSTEM	Ignition switch at ON position	UNPROTECTED
LEARNING MODE	Ignition switch at ON position	LOCKED
TRANS CODE REG	Ignition switch at ON position	RGSTD

Scan Tool Data Definitions

IGNITION SWITCH
ON: Ignition switch at ON position
OFF: Ignition switch at OFF position

TRANSPONDER
DETECTED: Transponder code in ignition key is detected by Immobilizer Control Module.
NOT DETECTED: Transponder code in ignition key is not detected by Immobilizer Control Module.

TRANS CODE
MATCHED: Transponder code in ignition key matches with the one registered with Immobilizer Control Module.
NOT MATCHED: Transponder code in ignition key does not match with the one registered with Immobilizer Control Module.

SYSTEM
PROTECTED: The immobilizer control system is protecting the engine not to be started up. Therefore, the engine can not be started up.
UNPROTECTED: The immobilizer control system is allowing the engine to be started up. Therefore, the engine can be started up.

LEARNING MODE
LOCKED: Registration of ignition key with Immobilizer Control Module is not allowed.
UNLOCKED: Registration of ignition key with Immobilizer Control Module is allowed.

TRANS CODE REG
NOT RGSTD: The transponder code is not registered with Immobilizer Control Module.
RGSTD: The transponder code is registered with Immobilizer Control Module.

Inspection of Immobilizer Control Module and Its Circuits

Voltage Inspection

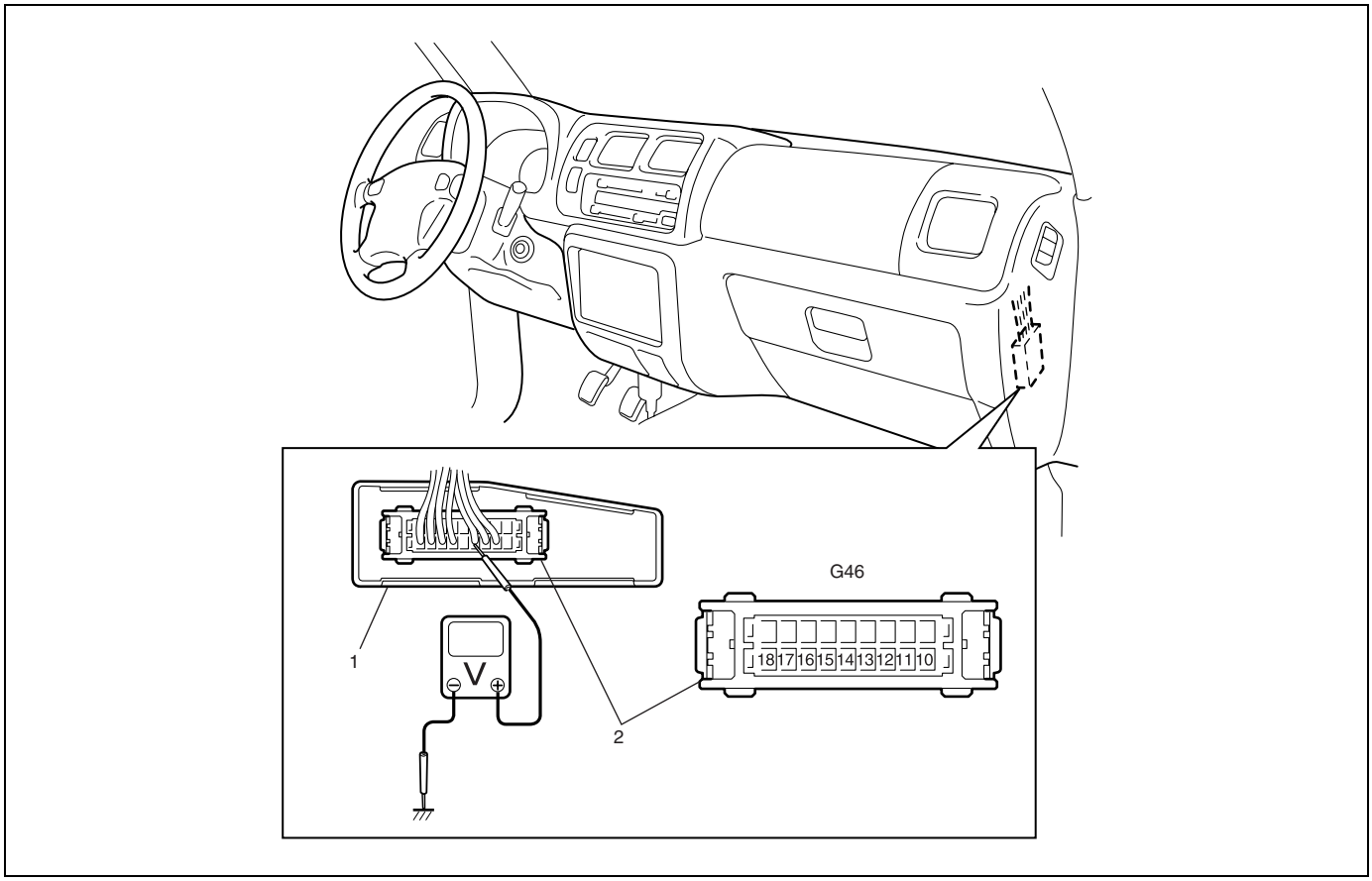

Immobilizer Control Module (1) can be checked at wiring connector (2) by measuring voltage.

CAUTION:
Immobilizer Control Module can not be checked by itself. It is strictly prohibited to connect voltmeter or ohmmeter to Immobilizer Control Module with coupler disconnected from it.

NOTE:
As the battery voltage affects each terminal voltage, confirm that it is 11 V or more when ignition switch is turned to ON position.

Connector	Terminal		Circuit	Normal Voltage	Condition
G46	11	BLU	Communication line between coil antenna and Immobilizer Control Module	About 12.0 V	Always
	12	PNK/GRN	Serial data line for SUZUKI scan tool	About 12.0 V	Ignition switch at ON position and SUZUKI scan tool connected to data link connector
				0.0 V	Ignition switch at OFF position
	13	PNK/GRN	Serial data line for SUZUKI scan tool	About 12.0 V	Ignition switch at ON position and SUZUKI scan tool connected to data link connector
				0.0 V	Ignition switch at OFF position
	15	PPL/WHT	Communication line between ECM and Immobilizer Control Module	See reference waveform below.	Ignition switch at ON position
				0.0 V	Ignition switch at OFF position
	16	BLK/WHT	Ignition switch signal	About 12.0 V	Ignition switch at ON position
				0.0 V	Ignition switch at OFF position
	17	BLK	Ground	0.0 V	Always
	18	WHT	Power supply	12.0 V	Always

Reference waveform

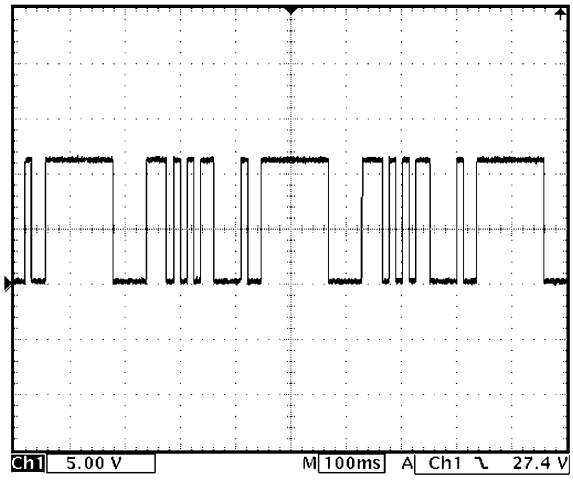

Measurement terminal	CH1: G46-15 to G46-17
Oscilloscope settings	CH1: 5 V/DIV TIME: 100 ms/DIV
Measurement condition	Ignition switch at ON position

DTC 16: Communication Line Between Immobilizer Control Module and Coil Antenna Shorted to Ground Circuit or Open

DTC Detecting Condition and Trouble Area

DTC Detecting Condition	Trouble Area
• Shorted to ground circuit or open in communication line between Immobilizer Control Module and coil antenna • Related fuse(s) blown • Power circuit for coil antenna faulty • Ground circuit for coil antenna faulty • Poor connection at Immobilizer Control Module connector • Poor connection at coil antenna connector • Coil antenna faulty • Immobilizer Control Module faulty	• Communication line between Immobilizer Control Module and coil antenna • Related fuse(s) • Power circuit for coil antenna • Ground circuit for coil antenna • Connection at Immobilizer Control Module connector • Connection at coil antenna connector • Coil antenna • Immobilizer control Module

Troubleshooting

Step	Action	Yes	No
1	Fuse check 1) Check if any related fuse is blown. Is any fuse blown?	Replace blown fuse(s) with new one(s).	Go to Step 2.
2	Check for poor connection of communication line between Immobilizer Control Module and coil antenna 1) Disconnect Immobilizer Control Module connector referring to “Immobilizer Control Module Removal and Installation” in this section. 2) Disconnect coil antenna connector referring to “Coil Antenna Removal and Installation” in this section. 3) Check if wire connections are normal at “G46-11” wire terminal at Immobilizer Control Module connector and “G47-2” wire terminal at coil antenna connector. Is each wire connection normal?	Go to Step 3.	Repair poor connection(s).
3	Check for short to ground circuit in communication line between Immobilizer Control Module and coil antenna 1) Check resistance between “G46-11” wire terminal at Immobilizer Control Module connector and body ground. Is resistance more than 1 MΩ?	Go to Step 4.	Repair short to ground circuit in communication line between Immobilizer Control Module and coil antenna.

Step	Action	Yes	No
4	Check for open in communication line between Immobilizer Control Module and coil antenna 1) Check resistance between “G46-11” wire terminal at Immobilizer Control Module connector and “G47-2” wire terminal at coil antenna connector. Is resistance infinite?	Repair open in communication line between Immobilizer Control Module and coil antenna.	Go to Step 5.
5	Check for power circuit for coil antenna 1) Connect connector to coil antenna. 2) With ignition switch at ON position, check voltage between “G47-4” wire terminal at coil antenna connector and body ground. Is it about 12 V?	Go to Step 6.	Repair open in power circuit.
6	Check for ground circuit for coil antenna 1) With ignition switch at ON position, check voltage between “G47-1” terminal at wire terminal at coil antenna connector and body ground. Is it 0 V?	Go to Step 7.	Repair open in ground circuit.
7	Coil antenna check 1) Remove coil antenna referring to “Coil Antenna Removal and Installation” in this section. 2) Inspect coil antenna referring to “Coil Antenna Inspection” in this section. Is it normal?	Replace Immobilizer Control Module with new one referring to “Immobilizer Control Module Removal and Installation” in this section. And then, perform key registration referring to “Procedure after Immobilizer Control module Replacement” in this section.	Replace coil antenna with new one.

DTC 21: Communication Line Between Immobilizer Control Module and Coil Antenna Shorted to Power Circuit

DTC Detecting Condition and Trouble Area

DTC Detecting Condition	Trouble Area
Short to power circuit in communication line between Immobilizer Control Module and coil antenna	Communication line between Immobilizer Control Module and coil antenna

Troubleshooting

Step	Action	Yes	No
1	Check for short to power circuit in communication line between Immobilizer Control Module and coil antenna 1) With ignition switch at ON position, check voltage between “G46-11” wire terminal at Immobilizer Control Module and body ground. Is it more than 12 V?	Repair short to power circuit in communication line between Immobilizer Control Module and coil antenna.	Go to Step 2.
2	Coil antenna check 1) Remove coil antenna referring to “Coil Antenna Removal and Installation” in this section. 2) Inspect coil antenna referring to “Coil Antenna Inspection” in this section. Is it normal?	Replace Immobilizer Control Module with new one referring to “Immobilizer Control Module Removal and Installation” in this section. And then, perform key registration referring to “Procedure after Immobilizer Control module Replacement” in this section.	Replace coil antenna with new one.

DTC 70: Immobilizer Control Module Internal Failure

DTC Detecting Condition and Trouble Area

DTC Detecting Condition	Trouble Area
Internal fault in Immobilizer Control Module	Immobilizer Control Module

Troubleshooting

1) Replace Immobilizer Control Module with new one referring to “Immobilizer Control Module Removal and Installation” in this section.
2) Register ignition key(s) with Immobilizer control Module referring to “Procedure to Register Ignition Key” in this section.

General Troubleshooting of Immobilizer Control System

This troubleshooting has to performed in case that any DTC is not detected by Immobilizer Control Module and the engine cannot be started up.

Possible Causes

- Open or short circuit in communication line between Immobilizer Control Module and ECM
- Related fuse(s) blown
- Ground circuit for coil antenna faulty
- Power circuit for Immobilizer Control Module faulty
- Ground circuit for Immobilizer Control Module faulty
- Poor connection at Immobilizer Control Module connector
- Poor connection at ECM connector
- Internal fault of Immobilizer Control Module
- Internal fault of ECM

Troubleshooting

Step	Action	Yes	No
1	Does “Diagnostic Flow Table” in this section performed?	Go to Step 2.	Perform “Diagnostic Flow Table” in this section.
2	Fuse Check 1) Check if any related fuse is blown. Is any fuse blown?	Replace blown fuse(s) with new one(s).	Go to Step 3.
3	Check for poor connection of communication line between Immobilizer Control Module and ECM 1) Disconnect Immobilizer Control Module connector referring to “Immobilizer Control Module Removal and Installation” in this section. 2) Disconnect ECM connectors referring to “Engine Control Module (ECM) Removal and Installation” in Section 6E2. 3) Check if wire connections are normal at “G46-15” wire terminal at Immobilizer Control Module connector and “E17-25” wire terminal at ECM connector Is each wire connection normal?	Go to Step 4.	Repair poor connection(s).
4	Check for short to power circuit in communication line between Immobilizer Control Module and ECM 1) Connect Immobilizer Control Module and ECM connectors. 2) With ignition switch at ON position, check voltage between “E17-25” wire terminal at ECM connector and body ground. Is it about 12 V?	Repair short to power circuit in communication line between Immobilizer Control Module and ECM.	Go to Step 5.

Step	Action	Yes	No
5	Check for short to ground circuit in communication line between Immobilizer Control Module and ECM 1) Disconnect Immobilizer Control Module and ECM connectors. 2) Check resistance between “G46-15” wire terminal at Immobilizer Control Module connector and body ground. Is resistance more than 1 MΩ?	Go to Step 6.	Repair short to ground circuit in communication line between Immobilizer Control Module and ECM.
6	Check for power circuit for coil antenna 1) With ignition switch at ON position, check voltage between “G47-4” wire terminal at coil antenna connector and body ground. Is it about 12 V?	Go to Step 7.	Repair open in power circuit.
7	Check for power circuit for Immobilizer Control Module 1) With ignition switch at ON position, check voltage between “G46-18” wire terminal at Immobilizer Control Module connector and body ground. Is it about 12 V?	Go to Step 8.	Repair open in ground circuit, and then start engine. If engine does not start, go to Step 9.
8	Check for ground circuit for Immobilizer Control Module 1) With ignition switch at ON position, check voltage between “G46-17” wire terminal at Immobilizer Control Module connector and body ground. Is it 0 V?	Go to Step 9.	Repair open in ground circuit.
9	Check for open in communication line between Immobilizer Control Module and ECM 1) Check resistance between “G46-15” wire terminal at Immobilizer Control Module connector and “E17-25” wire terminal at ECM connector. Is resistance infinite?	Repair open in communication line between Immobilizer Control Module and ECM.	Go to Step 10.
10	Check for fault of Immobilizer Control Module 1) Perform voltage check referring to “Inspection of Immobilizer Control Module and Its Circuits” in this section. Is each terminal voltage normal?	Perform “Procedure for ECM Replacement in this section.	Replace Immobilizer Control Module with new one referring to “Immobilizer Control Module Removal and Installation” in this section. And then, perform key registration referring to “Procedure after Immobilizer Control Module Replacement” in this section.

On-vehicle Service

Precautions in Handling Immobilizer Control System

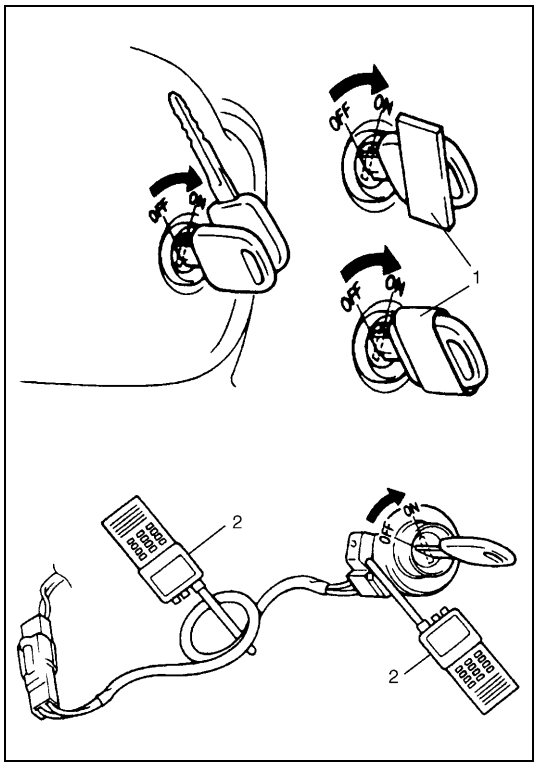

- Do not turn ignition switch to ON position with ignition key with built-in transponder put together with another one or placed quite close to another one. Or, the system may detect abnormal condition and prevent engine from running.
- Do not turn ignition switch to ON position by using ignition key with built-in transponder with any type of metal wound (1) around its grip (housing) or in contact with it. Or, the system may detect abnormal condition and prevent engine from starting.
- Do not leave ignition key with built-in transponder where high temperature is anticipated. High temperature will cause transponder in ignition key to be abnormal or damaged.
- Do not turn ignition switch to ON position (II) with a radio antenna (2) placed near coil antenna or its harness to Immobilizer Control Module. Or, the system may detect abnormal condition and prevent engine from starting.

Immobilizer Control Module Removal and Installation

Removal

1) Disconnect negative (–) cable at battery.
2) Disable air bag system referring to “Disabling Air Bag System” in section 10B.
3) Remove glove box from instrument panel.

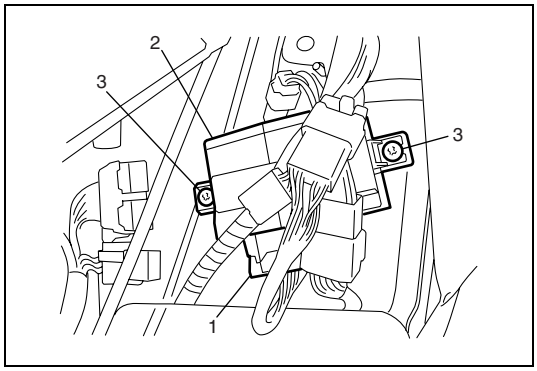

4) Remove a connector (1) from Immobilizer Control Module (2).
5) Remove two screws (3), and then remove Immobilizer Control Module from vehicle body.

Installation

Reverse removal procedure noting the following instruction.

- Enable air bag system referring to “Enabling Air Bag System” in Section 10B.

Coil Antenna Removal and Installation

Removal

1) Disconnect negative (–) cable at battery.
2) Disable air bag system referring to “Disabling Air Bag System” in section 10B.
3) Remove driver air bag (inflator) module referring to “Driver Air Bag (inflator) module (for Vehicle with Air Bag System)” in Section 3C.
4) Remove steering wheel referring to “Steering Wheel” in Section 3C.
5) Remove steering hole cover.
6) Remove steering column upper and lower covers.
7) Remove contact coil and combination switch referring to “Combination Switch (for Vehicle without Air Bag System)/ Contact Coil and Combination Switch Assembly (for Vehicle with Air Bag System)” in Section 3C.

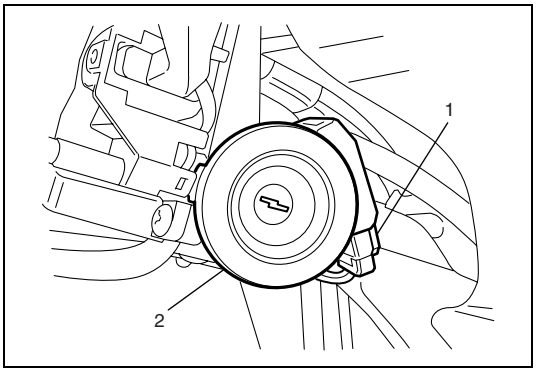

8) Remove connector (1) from coil antenna (2), and then remove coil antenna from steering lock assembly.

Installation

Reverse removal procedure noting the following instruction.

- Enable air bag system referring to “Enabling Air Bag System” in Section 10B.

Coil Antenna Inspection

Inspection

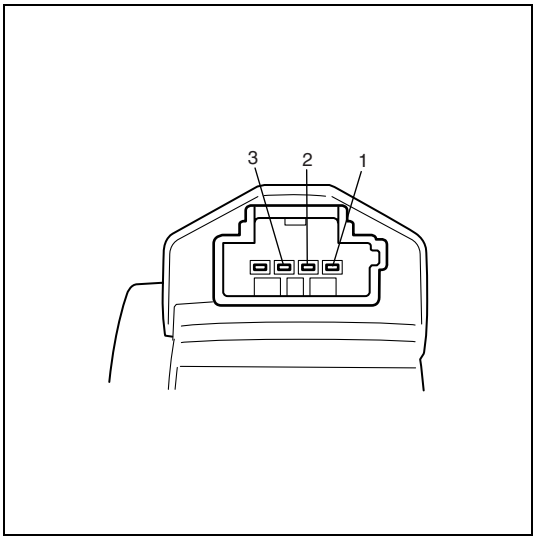

1) Check for continuity between “WHT” (2) and “BLU” (1) terminals by connecting tester’s positive prove to “WHT” terminal and negative prove to “BLU” terminal. If there is no continuity, replace coil antenna with new one. Otherwise, go to the next step.
2) Check for continuity between “BLU” (1) and “BLK” (3) terminals by connecting tester’s positive prove to “BLU” terminal and negative prove to “BLK” terminal. If there is no continuity, replace coil antenna with new one. Otherwise, go to the next step.
3) Check for continuity between “WHT” (2) and “BLK” (3) terminals by connecting tester’s positive prove to “WHT” terminal and negative prove to “BLK” terminal. If there is no continuity, replace coil antenna with new one.

Registration Procedure of Immobilizer Control System Components

When replacing ignition key, Immobilizer Control Module, and/or ECM, perform the following procedures.

Procedure to register ignition key

1) Register ignition keys with built-in transponder with Immobilizer Control Module performing “Immobilizer Key Coding” mode of diagnostic software for SUZUKI scan tool. For your details, refer to “SUZUKI Tech2 Operator’s Manual”.

NOTE:

Maximum two ignition keys with built-in transponder can be registered with Immobilizer Control Module. And, each transponder code has to be same. Therefore, if one of two keys already registered with Immobilizer Control Module is lost or broken and if you would like to register one new key, it is not possible to register it with Immobilizer Control Module. If you would like to have two keys registered with Immobilizer Control Module, register two new keys with Immobilizer Control Module.

2) Replace ECM with new one referring to “Procedure for ECM Replacement” in this section.

NOTE:

Immobilizer control system data is registered with ECM. The code is calculated by using the transponder code in the ignition key and cannot be rewritten. Therefore, ECM has to be replaced with new one when registering new ignition key with Immobilizer Control Module.

Procedure after Immobilizer Control Module replacement

Register ignition keys with built-in transponder with Immobilizer Control Module performing “Immobilizer Key Coding” mode of diagnostic software for SUZUKI scan tool. For your details, refer to “SUZUKI Tech2 Operator’s Manual”.

Procedure for ECM replacement

The following data are registered with ECM.

- Fuel injector calibration codes
- Immobilizer control system data
- Vehicle configurations

When ECM is replaced with new one, the above data have to be registered with the new one. The registration procedure is described in “ECM Registration” in Section 6E2. Therefore, perform “ECM Registration” in Section 6E2.

Special Tools

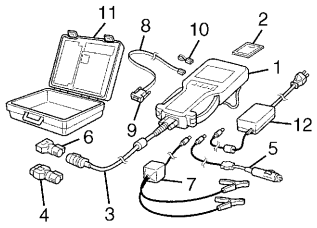

Tech 2 kit (SUZUKI scan tool)
See NOTE below.

NOTE:

This kit includes the following items.
1. Tech 2, 2. PCMCIA card, 3. DLC cable, 4. SAE 16/19 adapter, 5. Cigarette cable, 6. DLC loopback adapter, 7. Battery power cable, 8. RS232 cable, 9. RS232 adapter, 10. RS232 loopback connector, 11. Storage case, 12. Power supply

SECTION 9

BODY SERVICE

WARNING:

For vehicles equipped with Supplemental Restraint (Air Bag) System:

- **Service on and around the air bag system components or wiring must be performed only by an authorized SUZUKI dealer. Refer to "Air Bag System Components and Wiring Location View" under "General Description" in air bag system section in order to confirm whether you are performing service on or near the air bag system components or wiring. Please observe all WARNINGS and "Service Precautions" under "On-Vehicle Service" in air bag system section before performing service on or around the air bag system components or wiring. Failure to follow WARNINGS could result in unintentional activation of the system or could render the system inoperative. Either of these two conditions may result in severe injury.**
- **Technical service work must be started at least 90 seconds after the ignition switch is turned to the "LOCK" position and the negative cable is disconnected from the battery. Otherwise, the system may be activated by reserve energy in the Sensing and Diagnostic Module (SDM).**
- **When servicing vehicle body, if shock may be applied to air bag system component parts, remove those parts beforehand. (Refer to Section 10B.)**

NOTE:

- **Fasteners are important attaching parts in that they could affect the performance of vital components and systems, and/or could result in major repair expense. They must be replaced with one of the same part number of with an equivalent part if replacement becomes necessary.**
  Do not use a replacement part of lesser quality or substitute a design. Torque values must be used as specified during reassembly to assure proper retention of these parts.
- **For the items with asterisk (*) in the "CONTENTS" below, refer to the same section of the service Manual mentioned in "FOREWORD" of this manual.**

9

CONTENTS

Glass and Windows ..... *
Front Door Glass ..... *
Front Door Window Regulator ..... *
Windowshield ..... *
Quarter Window ..... *
Back Door Glass ..... *
Body Structure 9-2
Front Door Assembly ..... *
Back Door Assembly ..... *
Under Body Dimensions 9-2
Body Dimensions ..... *
Instrumentation and Driver Information ..... *
Instrument Panel ..... *
Seats ..... *
Front Seat ..... *
Rear Seat ..... *
Paint and Coatings ..... *
Anti-Corrosion Treatment ..... *
Metal Replacement Parts Finishing ..... *
Security and Locks ..... *
Front Door Lock Assembly ..... *
Back Door Lock Assembly ..... *
Exterior and Interior Trim ..... *
Splash Guard ..... *
Roof Rail (If Equipped) ..... *
Tightening Torque Specification ..... *

Body Structure

Under Body Dimensions

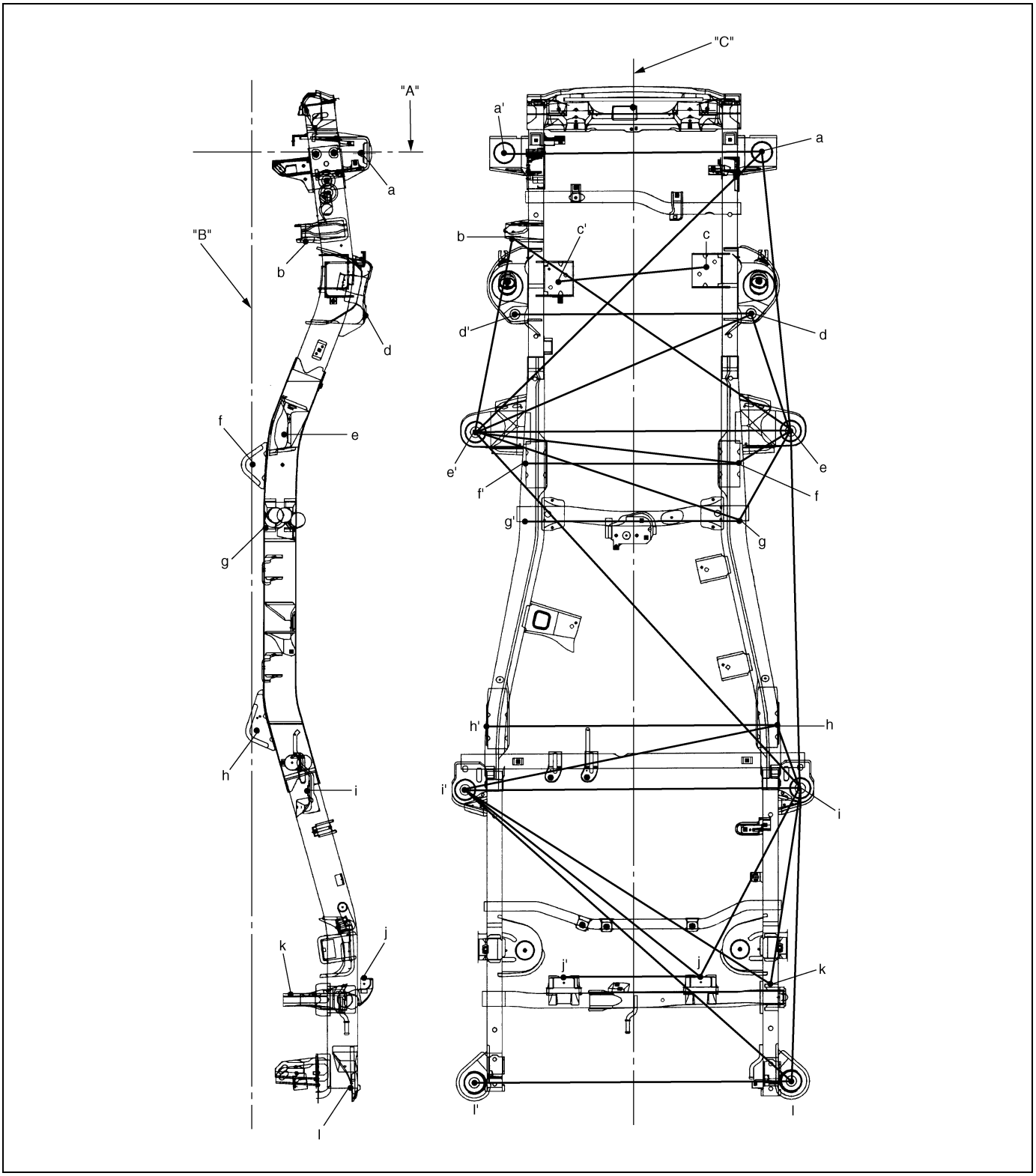

a, a'. 1st mounting installation hole	f, f'. Front suspension arm installation hole	k. Lateral rod front section installation hole
b. Lateral rod rear section installation hole	g, g'. Zig hole	l, l'. 4th mounting installation hole
c, c'. Engine mounting installation hole	h, h'. Rear suspension arm installation hole	"A": Standard line
d, d'. Front shock absorber installation hole	i, i'. 3rd mounting installation hole	"B": Standard line
e, e'. 2nd mounting installation hole	j, j'. Rear shock absorber installation hole	"C": Standard line

Projection Dimension

Measurement Position	Length from line "A" mm (in.)	Length from line "B" mm (in.)	Length from line "C" mm (in.)
a	0 (0)	367 (14.45)	425 (16.73)
b	285 (11.22)	156 (6.14)	395 (15.55)
c	379 (14.92)	312 (12.28)	242 (9.53)
d	532 (20.94)	368 (14.49)	390 (15.35)
e	920 (36.22)	113 (4.45)	520 (20.47)
f	1025 (40.35)	0 (0)	356 (14.02)
g	1215 (47.83)	36 (1.42)	355 (13.98)
h	1900 (74.80)	16 (0.63)	481 (18.94)
i	2098 (82.60)	182 (7.17)	553 (21.77)
j	2719 (107.05)	370 (14.57)	226 (8.90)
k	2765 (108.86)	101 (3.98)	481 (18.94)
l	3065 (120.67)	325 (12.80)	523 (20.59)

Measurement Dimension

Measurement Position	Length mm (in.)	Measurement Position	Length mm (in.)
a – a'	850 (33.46)	g – e'	927 (36.50)
a – e'	1343 (52.87)	g – g'	710 (27.95)
a – e	959 (37.76)	h – h'	962 (37.87)
b – e'	649 (25.55)	h – i'	1066 (41.97)
b – e	1115 (43.90)	h – i	268 (10.55)
c – c'	495 (19.49)	i – i'	1106 (43.54)
d – d'	780 (30.71)	i – j	727 (28.62)
d – e'	1022 (40.24)	i – k	676 (26.61)
d – e	482 (18.98)	i – e'	1595 (62.80)
e – e'	1040 (40.94)	j – i'	1014 (39.92)
e – f	225 (8.86)	k – i'	1233 (48.54)
e – g	347 (13.66)	j – j'	452 (17.80)
e – i	1180 (46.46)	l – i	978 (38.50)
f – e'	889 (35.00)	l – i'	1454 (57.24)
f – f'	712 (28.03)	l – l'	1046 (41.18)

SECTION 10B2

AIR BAG SYSTEM

WARNING:

- **Service on or around the air bag system components or wiring must be performed only by an authorized SUZUKI dealer. Please observe all WARNINGS and "Service Precautions" under "On-Vehicle Service" in this section before performing service on or around the air bag system components or wiring. Failure to follow WARNINGS could result in unintended activation of the system or could render the system inoperative. Either of these two conditions may result in severe injury.**
- **The procedures in this section must be followed in the order listed to disable the air bag system temporarily and prevent false diagnostic trouble codes from setting. Failure to follow procedures could result in possible activation of the air bag system, personal injury or otherwise unneeded air bag system repairs.**

CAUTION:

When fasteners are removed, always reinstall them at the same location from which they were removed. If a fastener needs to be replaced, use the correct part number fastener for that application. If the correct part number fastener is not available, a fastener of equal size and strength (or stronger) may be used. Fasteners that are not reused, and those requiring thread-locking compound, will be called out. The correct torque value must be used when installing fasteners that require it. If the above conditions are not followed, parts or system damage could result.

NOTE:

For the items with asterisk (*) in the "CONTENTS" below, refer to the same section of the Service Manual mentioned in "FOREWORD" of this manual.

CONTENTS

General Description 10B2-3
- System Components and Wiring Location View and Connectors 10B2-3
- System Wiring Diagram 10B2-4

Diagnosis 10B2-5
- Diagnostic Trouble Code (DTC) ..... *
- Use of Special Tool ..... *
- Intermittents and Poor Connections ..... *
- Air Bag Diagnostic System Check ..... *
- Air Bag Diagnostic System Check Flow Table ..... *
- DTC Check ..... *
- DTC Clearance ..... *
- DTC Table 10B2-5
- "AIR BAG" Warning Lamp Circuit Trouble Diagnosis Table ..... *
  - "AIR BAG" warning lamp comes on steady ..... *
  - "AIR BAG" warning lamp does not come on ..... *
  - "AIR BAG" warning lamp flashes ..... *
  - "AIR BAG" warning lamp can not indicate flashing ..... *
- SDM Serial Data Circuit Trouble Diagnosis Table ..... *
- DTC B1015 – Passenger Air Bag Initiator Circuit Resistance High ..... *
- DTC B1016 – Passenger Air Bag Initiator Circuit Resistance Low ..... *
- DTC B1018 – Passenger Air Bag Initiator Circuit Short to Ground ..... *
- DTC B1019 – Passenger Air Bag Initiator Circuit Short to Power Circuit ..... *
- DTC B1021 – Driver Air Bag Initiator Circuit Resistance High ..... *
- DTC B1022 – Driver Air Bag Initiator Circuit Resistance Low ..... *
- DTC B1024 – Driver Air Bag Initiator Circuit Short to Ground ..... *
- DTC B1025 – Driver Air Bag Initiator Circuit Short to Power Circuit ..... *

DTC B1032 – Power Source Voltage Low ..... *
DTC B1035 – Forward Sensor Circuit Open or Short to Power Circuit 10B2-7
DTC B1036 – Forward Sensor Circuit Short Between Two Wires or Short to Ground 10B2-7
DTC B1041 – Driver Pretensioner Initiator Circuit Resistance High ..... *
DTC B1042 – Driver Pretensioner Initiator Circuit Resistance Low ..... *
DTC B1043 – Driver Pretensioner Initiator Circuit Short to Ground ..... *
DTC B1044 – Driver Pretensioner Initiator Circuit Short to Power Circuit ..... *
DTC B1045 – Passenger Pretensioner Initiator Circuit Resistance High ..... *
DTC B1046 – Passenger Pretensioner Initiator Circuit Resistance Low ..... *
DTC B1047 – Passenger Pretensioner Initiator Circuit Short to Ground ..... *
DTC B1048 – Passenger Pretensioner Initiator Circuit Short to Power Circuit ..... *
DTC B1051 – Frontal Crash Detected (System Activation Command Outputted) ..... *
DTC B1071 – Internal SDM Fault ..... *
DTC B1013 – System Specifications Different from SDM Specifications ..... *

On-vehicle Service 10B2-10

Service Precautions ..... *
Service and diagnosis ..... *
Disabling air bag system ..... *
Enabling air bag system ..... *
Handling and storage ..... *
Disposal ..... *
Air bag wire harness and connector in instrument panel harness, floor harness and pretensioner harness 10B2-10
Repairs and Inspections Required after an Accident 10B2-10
Accident with Deployment / Activation - Component Replacement 10B2-10
Accident with or without Deployment / Activation - Component Inspections 10B2-11
Forward Sensor 10B2-13
SDM ..... *
Passenger Air Bag (Inflator) Module ..... *
Driver Air Bag (Inflator) Module ..... *
Contact Coil and Combination Switch Assembly ..... *
Seat Belt Pretensioner ..... *

Air Bag (Inflator) Module and Seat Belt Pretensioner Disposal ..... *

Deployment / Activation Outside of Vehicle ..... *
Deployment / Activation Inside Vehicle ..... *
Deployed Air Bag (Inflator) Module and Activated Seat Belt Pretensioner Disposal ..... *

Tightening Torque Specification 10B2-15

Special Tool ..... *

General Description

System Components and Wiring Location View and Connectors

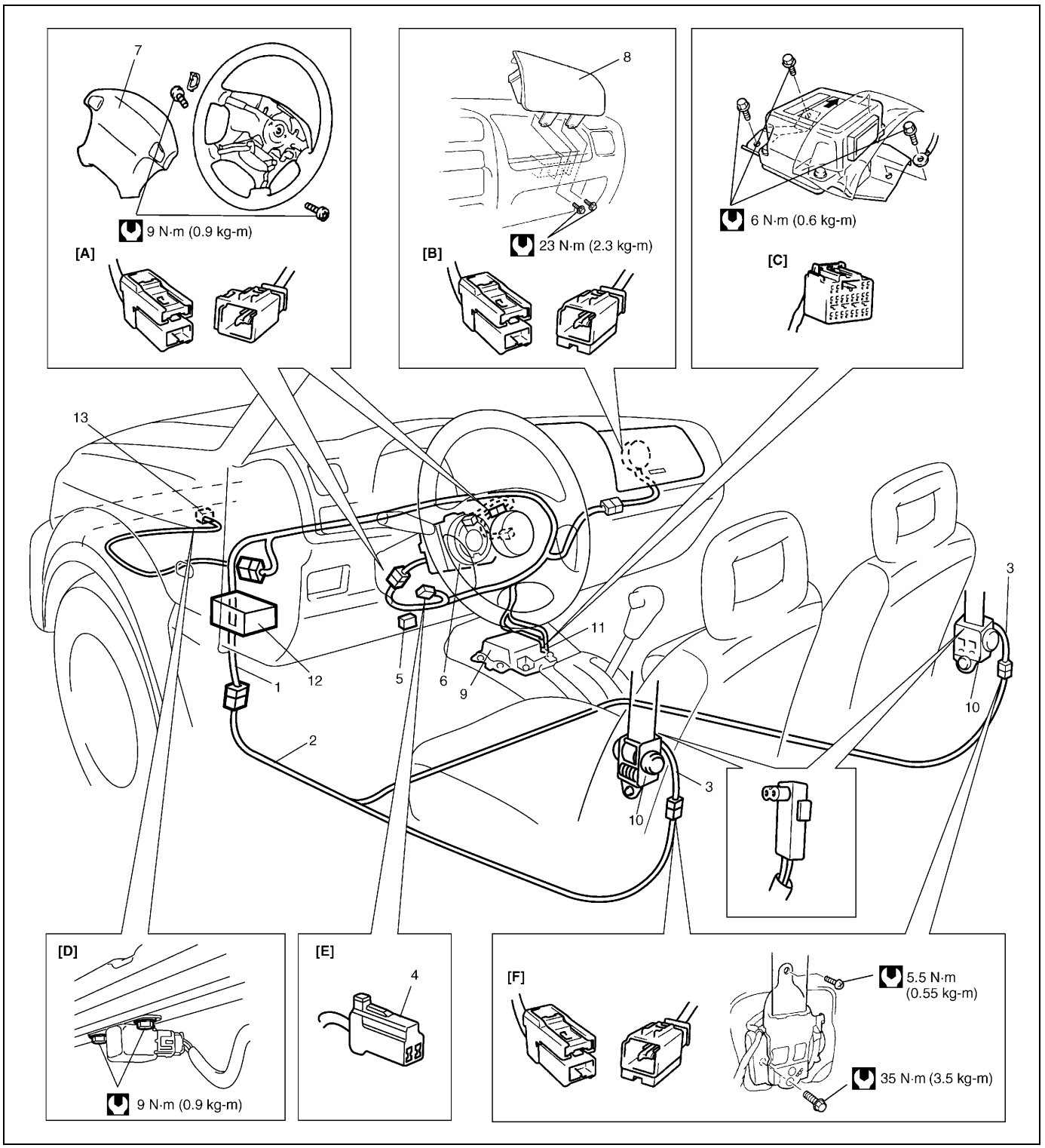

1. Air bag harness in instrument panel harness	8. Passenger air bag (inflator) module
2. Air bag harness in floor harness	9. SDM
3. Air bag harness in seat belt pretensioner harness	10. Seat belt pretensioner (retractor assembly)
4. “Air bag” monitor coupler	11. Ground for air bag system
5. DLC	12. “AIR BAG” fuse in circuit fuse box
6. Contact coil assembly	13. Forward sensor
7. Driver air bag (inflator) module	

System Wiring Diagram

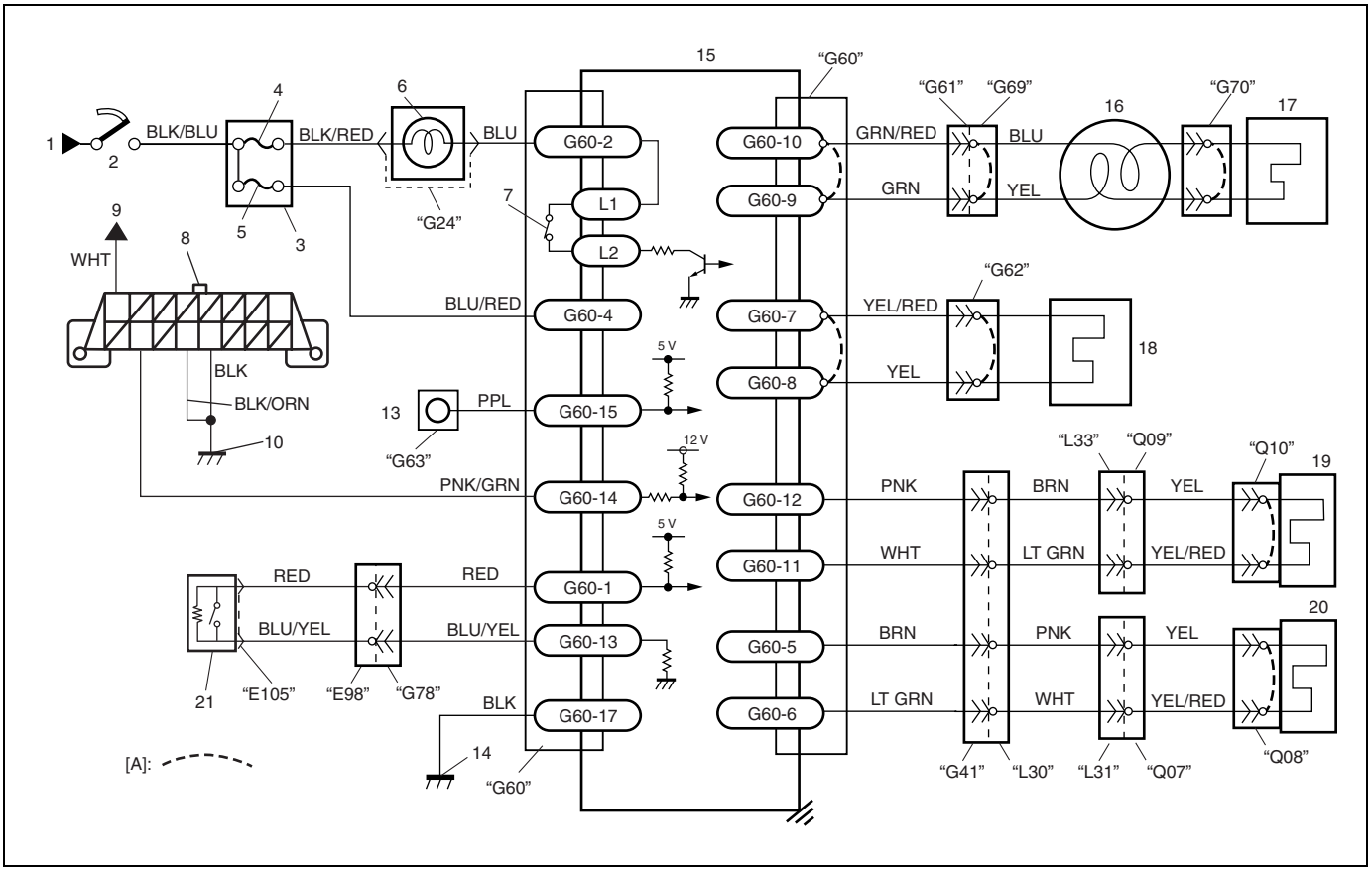

[A]: Shorting bar	8. Data link connector (DLC)	16. Contact coil assembly
1. To main fuse box	9. To circuit fuse box	17. Driver air bag (inflator) module
2. Ignition switch	10. Ground on body	18. Passenger air bag (inflator) module
3. Circuit fuse box	11. Ground on engine block	19. Driver seat belt pretensioner
4. "METER" fuse	12. To ECM, TCM and ABS control module (if equipped)	20. Passenger seat belt pretensioner
5. "AIR BAG" fuse	13. "AIR BAG" monitor coupler	21. Forward sensor
6. "AIR BAG" warning lamp in combination meter	14. Ground for air bag system	
7. Connection detection pin	15. SDM	

TERMINAL ARRANGEMENT OF SDM CONNECTOR "G60" VIEWED FROM HARNESS SIDE

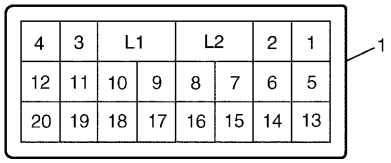

1. SDM connector "G60"

SDM connector "G60" terminal description

TERMINAL	CIRCUIT		TERMINAL	CIRCUIT	
G60-1	Forward sensor	High	G60-11	Driver pretensioner	Low
G60-2	"AIR BAG" warning lamp		G60-12		High
G60-3	–		G60-13	Forward sensor	Low
G60-4	Ignition switch (power source)		G60-14	Data link connector (DLC)	
G60-5	Passenger pretensioner	High	G60-15	Diagnosis switch	
G60-6		Low	G60-16	–	

G60-7	Passenger air bag (inflator) module	High	G60-17	Ground
G60-8		Low	G60-18	–
G60-9	Driver air bag (inflator) module	Low	G60-19	–
G60-10		High	G60-20	–

Diagnosis

WARNING:
To avoid deployment when troubleshooting the air bag system, do not use electrical test equipment such as a battery powered or AC powered voltmeter, ohmmeter, etc., or any type of electrical equipment other than that specified in this manual. Do not use a non-powered probe type tester.
Instructions in this manual must be followed carefully, otherwise personal injury may result.

DTC Table

DTC	"AIR BAG" warning lamp flashing pattern		Diagnosis		
	NO.	MODE			
–	12		Normal		–
B1015	15		Passenger air bag circuit	Resistance high	Diagnose trouble according to diagnostic flow table corresponding to each code No.
B1016	16	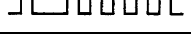		Resistance low	
B1018	18			Short to ground	
B1019	19	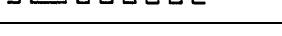		Short to power circuit	
B1021	21		Driver air bag circuit	Resistance high	
B1022	22	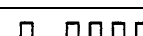		Resistance low	
B1024	24			Short to ground	
B1025	25			Short to power circuit	
B1032	32	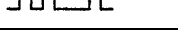	Power source voltage	Too low	
B1035	35		Forward sensor circuit	Open or short to power circuit	
B1036	36	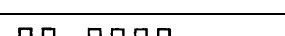		Short between two wires or short to ground	
B1041	41	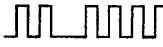	Driver pretensioner circuit	Resistance high	
B1042	42			Resistance low	
B1043	43	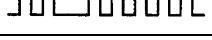		Short to ground	
B1044	44			Short to power circuit	

DTC	"AIR BAG" warning lamp flashing pattern		Diagnosis		
	NO.	MODE			
B1045	45		Passenger pretensioner circuit	Resistance high	Diagnose trouble according to diagnostic flow table corresponding to each code No.
B1046	46	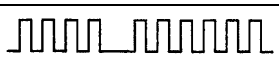		Resistance low	
B1047	47	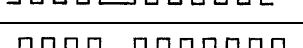		Short to ground	
B1048	48	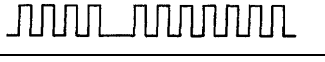		Short to power circuit	
B1051	51		SDM	Frontal crash detected	
B1071	71		SDM	Internal fault	
B1013	13			Specifications different between air bag system and SDM	

NOTE:

- **When 2 or more codes are indicated, the lowest numbered code will appear first.**
- **Current DTC and history DTC can be identified by lighting and flashing of "AIR BAG" warning lamp as follows. However, if a multiple number of DTC's are set an even one of them is a current DTC, "AIR BAG" warning lamp remains on after ignition switch is turned ON. Therefore, it is not possible to identify any of them as to whether it is a current one or a history one. (But use of SUZUKI scan tool will make identification possible.)**

	Current DTC is set. (Abnormality exists at present.)	**History DTC is set only. (Faulty condition occurred once in the past but normal condition is restored at present.)**
"AIR BAG" warning lamp after ignition switch ON	**Flashing 6 times and turns on.**	**Flashing 6 times and turns off.**
"AIR BAG" warning lamp when grounding diagnosis switch	**Current DTC is displayed.**	**History DTC is displayed.**

DTC B1035 – Forward Sensor Circuit Open or Short to Power Circuit

DTC B1036 – Forward Sensor Circuit Short Between Two Wires or Short to Ground

WIRING DIAGRAM

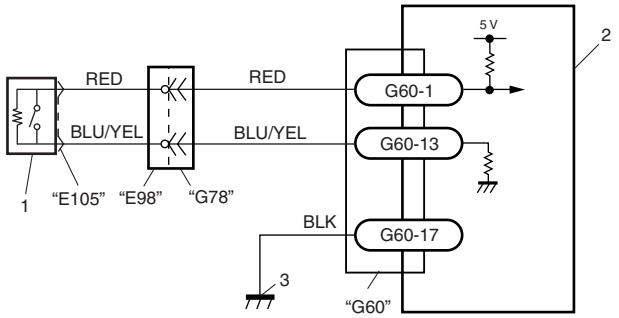

1. Forward sensor	3. Ground for air bag system
2. SDM	

CAUTION:

- **Be sure to perform "Air Bag Diagnostic System Check" in this section before starting diagnosis according to flow table.**
- **When measurement of resistance or voltage is required in this table, use a specified digital multimeter described in "Special Tool" in this section along with a correct terminal adapter from special tool (Connector test adapter kit).**
- **When a check for proper connection is required, refer to "Intermittent and Poor Connections" in this section.**
- **If there is open circuit in the air bag wire harness, connector or terminal is found damaged, replace the wire harness, connector and terminal as an assembly.**

DTC WILL SET WHEN

DTC B1035:

The voltage measured at forward sensor circuit (terminal G60-1) is above a specified value for specified time.

DTC B1036:

The voltage measured at forward sensor circuit (terminal G60-1) is below a specified value for specified time.

TABLE TEST DESCRIPTION

DTC B1035:

STEP 1: Check whether malfunction is in forward sensor.
STEP 2: Check if forward sensor circuit is open.
STEP 3: Check if forward sensor circuit is shorted to power circuit.

DTC B1036:

STEP 1: Check whether malfunction is in forward sensor.
STEP 2: Check if forward sensor circuit is shorted between two wires.
STEP 3: Check if forward sensor circuit is shorted to ground.

DIAGNOSTIC FLOW TABLE

DTC B1035: FORWARD SENSOR CIRCUIT OPEN OR SHORT TO POWER CIRCUIT

Step	Action	Yes	No
1	1) Ignition switch OFF. 2) Disconnect driver air bag (inflator) module connector, passenger air bag (inflator) module connector, driver pretensioner module connector, and passenger pretensioner module connector. 3) Disconnect forward sensor connector. 4) Check proper connection to forward sensor connector at "RED" and "BLU/YEL" terminals. 5) If OK then measure resistance between terminals of forward sensor. Is resistance 738 – 902 Ω?	Go to step 2.	Replace forward sensor.
2	1) Reconnect forward sensor connector. 2) Disconnect SDM connector "G60". 3) Check proper connection to SDM connector at terminals "G60-1" and "G60-13". 4) If OK then measure resistance between terminals "G60-1" and "G60-13". Is resistance 738 – 902 Ω?	Go to step 3.	Repair high resistance or open in "RED" and "BLU/YEL" wire circuit (between forward sensor and SDM).
3	1) Disconnect forward sensor connector. 2) Measure voltage from "G60-1" terminal to body ground and "G60-13" terminal to body ground. With ignition switch ON, are they 1V or less?	Substitute a known-good SDM and recheck.	Repair short from "RED" or "BLU/YEL" wire circuit (between forward sensor and SDM) to power circuit.

[A] Fig. for STEP 1 / [B] Fig. for STEP 2 / [C] Fig. for STEP 3

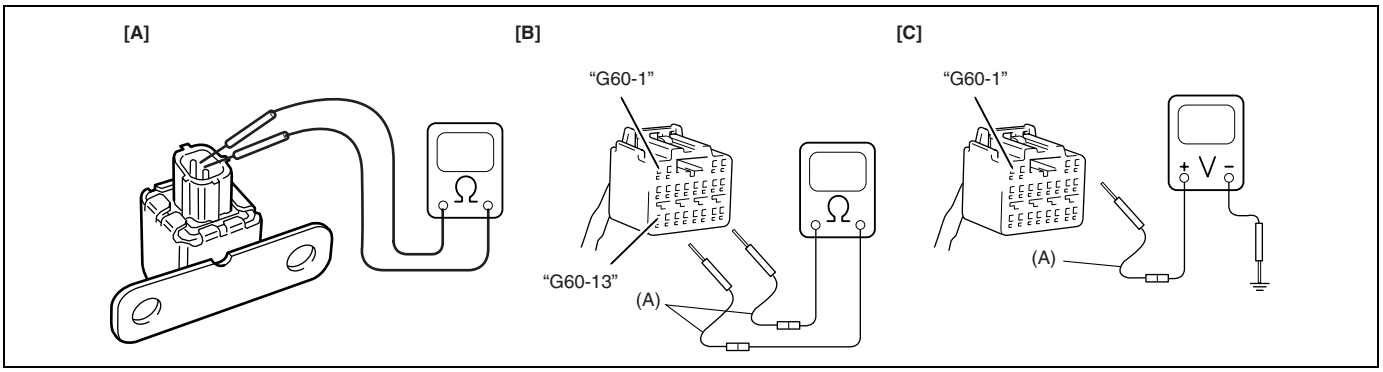

Special tool
(A): 09932-76010

NOTE:

Upon completion of inspection and repair work, perform the following items.

- **Reconnect all air bag system components, ensure all components are properly mounted.**
- **Clear diagnostic trouble codes referring to "DTC Clearance" in this section, if any.**
- **Repeat "Air Bag Diagnostic System Check" in this section to confirm that the trouble has been corrected.**

DTC B1036: FORWARD SENSOR CIRCUIT SHORT BETWEEN TWO WIRES OR SHORT TO GROUND

Step	Action	Yes	No
1	1) Ignition switch OFF. 2) Disconnect driver air bag (inflator) module connector, passenger air bag (inflator) module connector, driver pretensioner module connector, and passenger pretensioner module connector. 3) Disconnect forward sensor connector. 4) Check proper connection to forward sensor connector at "RED" and "BLU/YEL" terminals. 5) If OK then measure resistance between terminals of forward sensor. Is resistance 738 – 902 Ω?	Go to step 2.	Replace forward sensor.
2	1) Disconnect SDM connector "G60". 2) Check proper connection to SDM connector at terminals "G60-1" and "G60-13". 3) If OK then measure resistance between terminals "G60-1" and "G60-13". Is resistance infinity?	Go to step 3.	Repair short from "RED" wire circuit (between forward sensor and SDM) to "BLU/YEL" wire circuit (between forward sensor and SDM).
3	1) Measure resistance between "G60-1" terminal and body ground, "G60-13" terminal and body ground. Are resistances infinity?	Substitute a known-good SDM and recheck.	Repair short from "RED" or "BLU/YEL" wire circuit (between forward sensor and SDM) to ground.

[A] Fig. for STEP 1 / [B] Fig. for STEP 2 / [C] Fig. for STEP 3

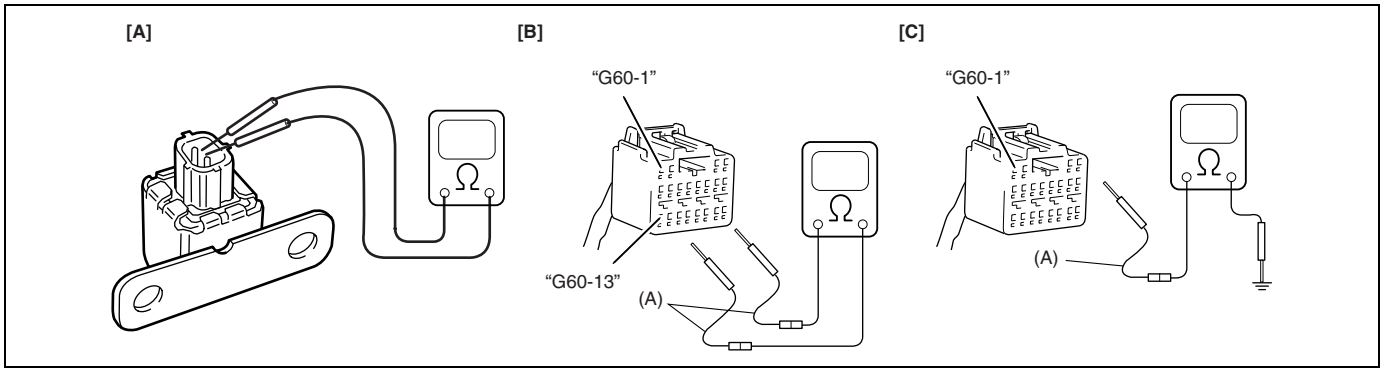

Special tool
(A): 09932-76010

NOTE:

Upon completion of inspection and repair work, perform the following items.

- **Reconnect all air bag system components, ensure all components are properly mounted.**
- **Clear diagnostic trouble codes referring to "DTC Clearance" in this section, if any.**
- **Repeat "Air Bag Diagnostic System Check" in this section to confirm that the trouble has been corrected.**

On-vehicle Service

Air bag wire harness and connector in instrument panel harness, floor harness and pretensioner harness

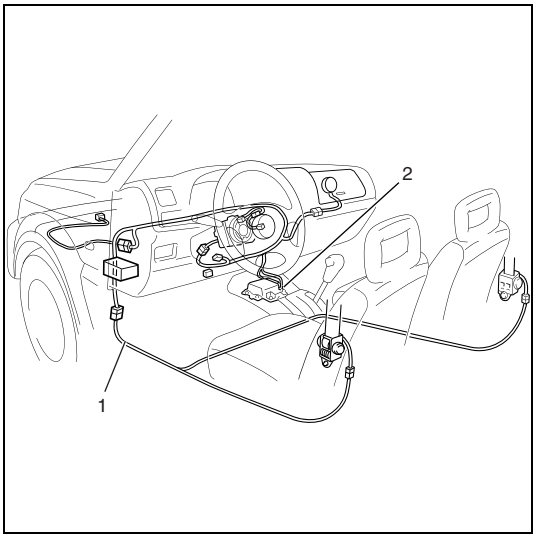

Air bag wire harness (1) is included in instrument panel harness, main harness floor harness and pretensioner harness. The air bag wire harness (1) can be identified easily as it is covered with a yellow protection tube and it has yellow connectors. Be very careful when handling it.

- When an open in air bag wire harness (1), damaged wire harness, connector or terminal is found, replace wire harness, connectors and terminals as an assembly.
- When installing it, be careful so that the air bag wire harness (1) is not caught or does not interfere with other parts.
- Make sure all air bag system grounding point (2) is clean and ground is securely fastened for optimum metal-to-metal contact. Poor grounding can cause intermittent problems that are difficult to diagnose.

Repairs and Inspections Required after an Accident

CAUTION:

- **All air bag system components, including the electrical harness (component mounting points), must be inspected after an accident. If any components are damaged or bent, they must be replaced even if air bag system activation did not occur.**
- **Never use air bag system parts from another vehicle.**
- **Do not attempt to service the parts below. Service of these parts is by replacement only.**
  - **Driver / Passenger air bag (inflator) module, Driver / Passenger seat belt pretensioner**
  - **SDM**
  - **Forward sensor**
  - **Contact coil and combination switch assembly**
  - **Air bag wire harness in instrument panel harness, floor harness and pretensioner harness.**
- **Proper operation of the air bag system requires that any repairs to the vehicle structure return it to its original production configuration.**

CAUTION:

After detecting one time of such collision as to meet deployment conditions, the SDM must not be used. Refer to "Air Bag Diagnostic System Check" in this section when checking the SDM.

Accident with Deployment / Activation - Component Replacement

The following components must be replaced.

- Driver and passenger air bag (inflator) modules
- Driver and passenger seat belt pretensioners
- SDM
- Forward sensor

Accident with or without Deployment / Activation - Component Inspections

Certain air bag system components must be inspected after any crash, whether the air bag system activated or not.
Those components are:

- Steering column and shaft joints
  - Check for length, damage and bend according to “Checking Steering Column for Accident Damage” in Section 3C.

If any faulty condition is found in above checks, replace faulty part.

- Steering column bracket and capsules
  - Check for damage and bent.

If any faulty condition is found in above checks, replace faulty part.

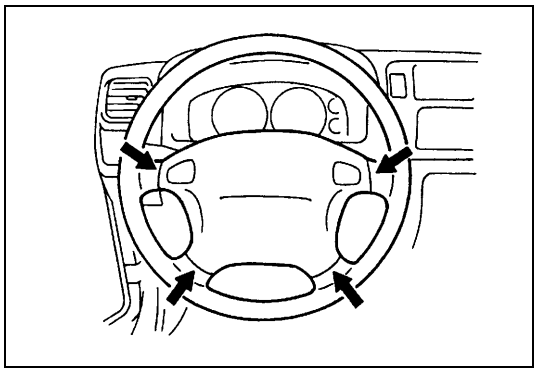

- Steering wheel and driver air bag (inflator) module
  - Check for damage or air bag (inflator) module fitness.
  - Check trim cover (pad surface) for cracks.
  - Check wire harness and connector for damage or tightness.

If any faulty condition is found in above checks, replace faulty part.

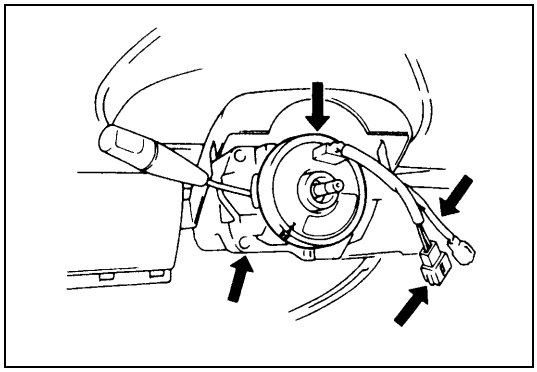

- Contact coil and combination switch assembly
  - Check wire harness and connectors for damage or tightness.
  - Check contact coil case for damage.

If any faulty condition is found in above checks, replace.

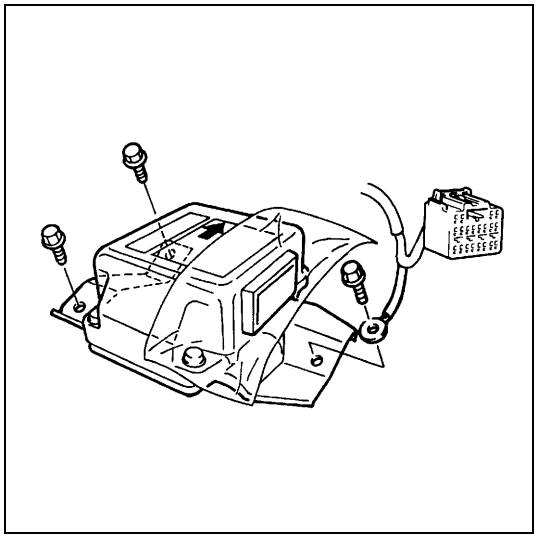

- SDM and SDM plate
  - Check for external damage such as deformation, scratch, crack, peeled paint, etc.
  - Check that SDM cannot be installed properly due to a cause in itself. (There is a gap between SDM and SDM plate, or it cannot be fixed securely.)
  - Check that connector or lead wire of SDM has a scorching, melting or damage.
  - Check that connector is connected securely or locked.
  - Check SDM connector and terminals for tightness.
  - Check SDM sets a diagnostic trouble code referring to “DTC Check” in this section, and the diagnostic table leads to a malfunctioning SDM.

If any faulty condition is found in above checks, replace.

- Instrument panel member and reinforcement
  - Check for any distortion, bending, cracking or other damage.

If any faulty condition is found in above checks, replace.

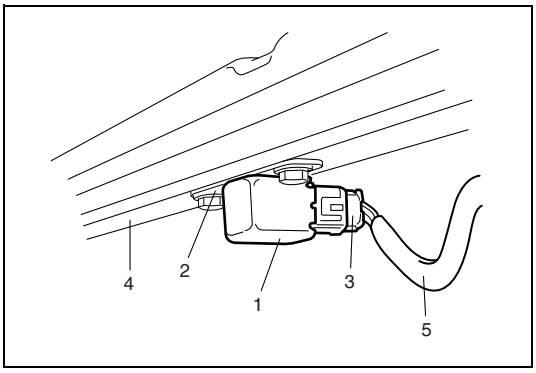

- Forward sensor
  - Check sensor (1), sensor bracket (2), and front panel (4) for damage bend or rust.
  - Check that connector (3) or lead wire (5) of forward sensor has a scorching, melting or damage.

If any faulty condition is found in above checks, replace.

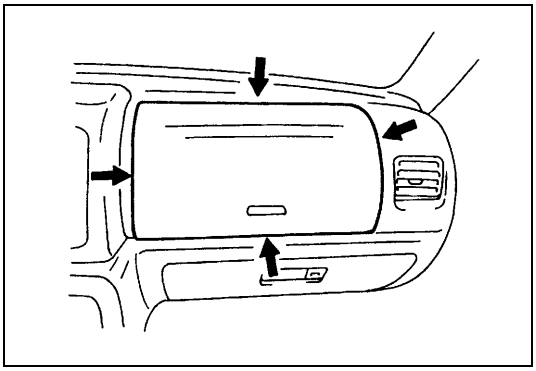

- Passenger air bag (inflator) module
  - Check for dents, cracks, damage or fitness.
  - Check trim cover for cracks or deformities.
  - Check harness and connector for damage or tightness.

If any faulty condition is found in above checks, replace.

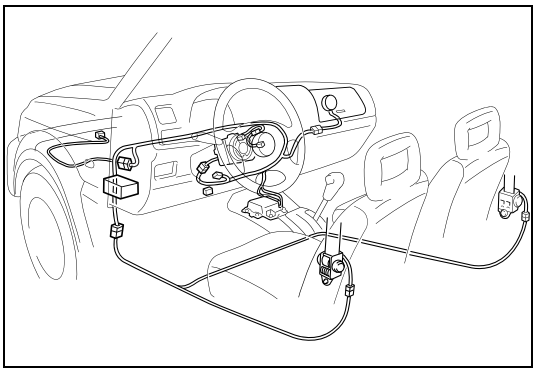

- Air bag wire harness and connections
  - Check for damages, deformities or poor connections referring to “Intermittents and Poor Connections” in this section.
  - Check wire harness clamps for tightness.

If any faulty condition is found, correct or replace.

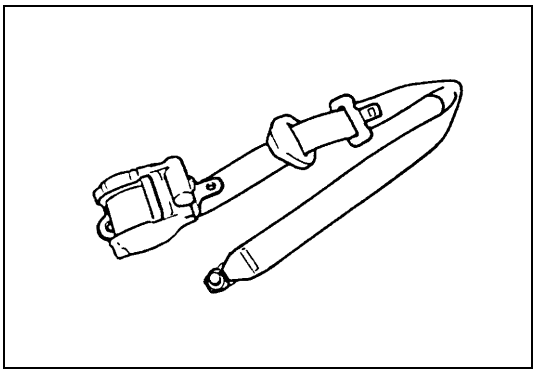

- Seat belt pretensioner
  - Check for dents, cracks, damage or fitness
  - Check harness and connector for damage or tightness.

If any faulty condition is found in above checks, replace.

- Seat belts and mounting points
  - Refer to “Front Seat Belt” in Section 10.
- “AIR BAG” warning lamp
  - After vehicle is completely repaired, perform “Air Bag Diagnostic System Check” in this section.

Forward Sensor

WARNING:

During service procedures, be very careful when handling a sensor.

- **Never strike or jar a sensor.**
- **Under some circumstances, it could cause improper operation of the air bag system. A sensor and mounting bracket bolts must be carefully torqued to assure proper operation.**

REMOVAL

1) Disconnect negative cable at battery.
2) Disable air bag system. Refer to “Disabling Air Bag System” in this section.
3) Remove front bumper referring to “Front Bumper” in Section 9.

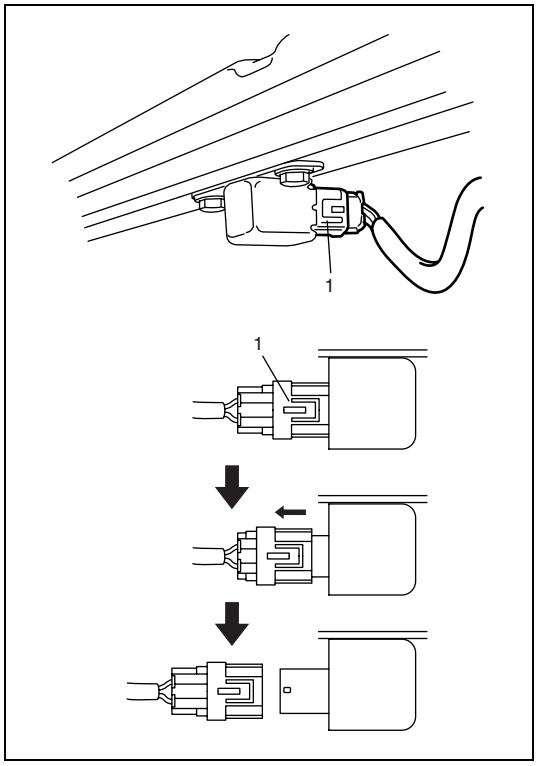

4) Disconnect forward sensor connector sliding connector outer (1) as shown.

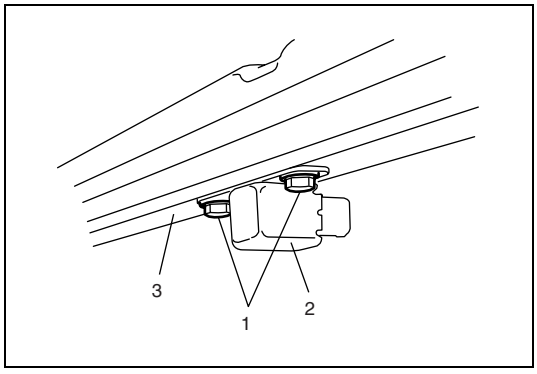

5) Remove forward sensor bolts (1), and forward sensor (2) from front panel (3).

INSPECTION

CAUTION:
- **Never disassemble forward sensor.**
- **Sensor should be replaced when it was dropped from a height of 90 cm (3 ft) or more.**

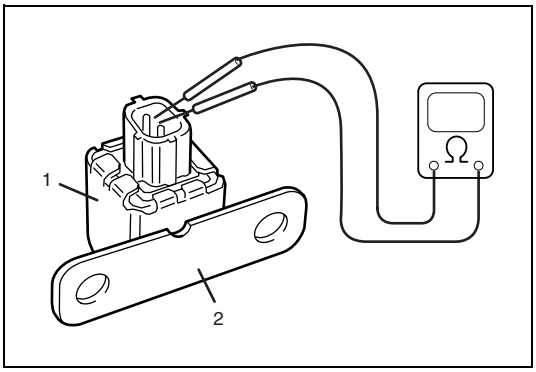

- Check sensor (1) and its bracket (2) for dents, cracks, deformation or rust.
- Check sensor connector (sensor side and harness side) or lock mechanism for damage or crack.
- Check connector terminals for bent, corrosion or rust.
- Check sensor for resistance.

Sensor resistance: 738 – 902 Ω

INSTALLATION

CAUTION:

Proper operation of forward sensor requires sensor be rigidly attached to vehicle structure and that the arrow on sensor be pointing toward the front of the vehicle.

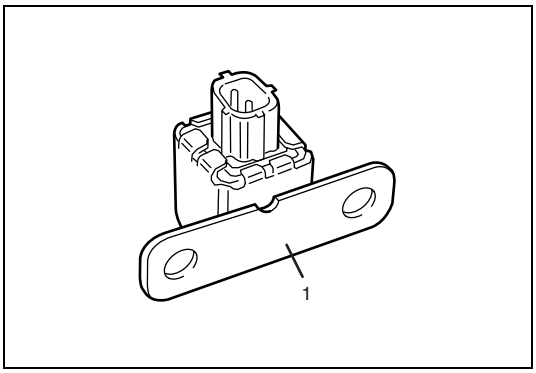

1) Check that none of following faulty conditions exists.
   - Bend or deformity of sensor bracket (1) and front panel.
   - Foreign matter on mating surfaces of sensor bracket (1) and front panel or excessive rust.

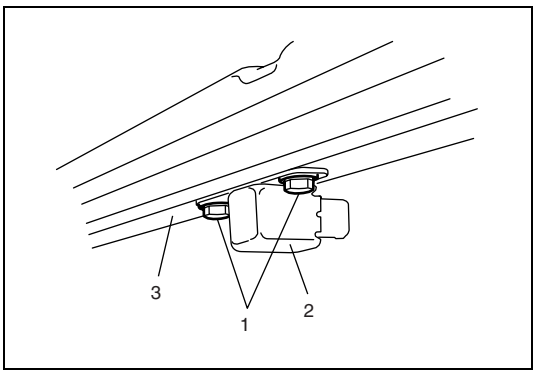

2) Apply thread lock cement to mounting bolts thread. Install forward sensor (1) on front panel (2) and tighten mounting bolts (3) to specified torque.

"A": Thread lock cement "1332B" 99000-32100

Tightening torque
(a): 9 N·m (0.9 kg-m, 6.5 lb-ft)

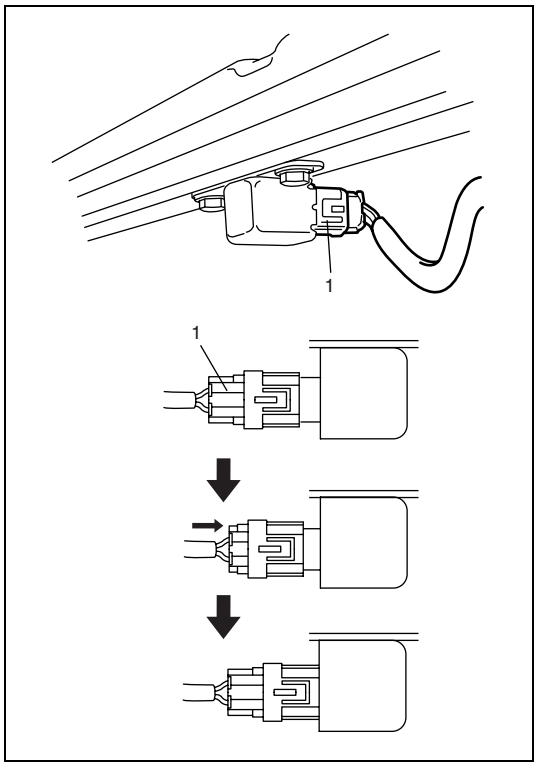

3) Connect forward sensor connector pushing connector inner (1) as shown.

4) Install front bumper referring to “Front bumper” in Section 9.
5) Connect negative cable at battery.
6) Enable air bag system. Refer to “Enabling Air Bag System” in this section.

Tightening Torque Specification

Fastening part	Tightening torque		
	N•m	kg-m	lb-ft
SDM mounting bolt	6	0.6	4.5
Passenger air bag (inflator) module bolt	23	2.3	16.5
Forward sensor mounting bolt	9	0.9	6.5

Prepared by
SUZUKI MOTOR CORPORATION

1st Ed. March, 2004