IMPORTANT

WARNING/CAUTION/NOTE

Please read this manual and follow its instructions carefully. To emphasize special information, the words **⚠ WARNING**, **⚠ CAUTION** and **NOTE** have special meanings. Pay special attention to the messages highlighted by these signal words.

⚠ WARNING

Indicates a potential hazard that could result in death or injury.

⚠ CAUTION

Indicates a potential hazard that could result in vehicle damage.

NOTE:

Indicates special information to make maintenance easier or instructions clearer.

⚠ WARNING

This service manual is intended for authorized Suzuki dealers and qualified service technicians only. Inexperienced technicians or technicians without the proper tools and equipment may not be able to properly perform the services described in this manual.
Improper repair may result in injury to the technician and may render the vehicle unsafe for the driver and passengers.

⚠ WARNING

For vehicles equipped with a Supplemental Restraint (Air Bag) System:

- **Service on and around the air bag system components or wiring must be performed only by an authorized SUZUKI dealer. Refer to "Air Bag System Components and Wiring Location View" under "General Description" in air bag system section in order to confirm whether you are performing service on or near the air bag system components or wiring. Please observe all WARNINGS and "Service Precautions" under "On-Vehicle Service" in air bag system section before performing service on or around the air bag system components or wiring. Failure to follow WARNINGS could result in unintentional activation of the system or could render the system inoperative. Either of these two conditions may result in severe injury.**
- **If the air bag system and another vehicle system both need repair, Suzuki recommends that the air bag system be repaired first, to help avoid unintended air bag system activation.**
- **Do not modify the steering wheel, instrument panel or any other air bag system component on or around air bag system components or wiring. Modifications can adversely affect air bag system performance and lead to injury.**
- **If the vehicle will be exposed to temperatures over 93 °C (200 °F), for example, during a paint baking process, remove the air bag system components, that is air bag (inflator) modules, SDM and/or seat belt with pretensioner, beforehand to avoid component damage or unintended activation.**

The circle with a slash in this manual means "Don't do this" or "Don't let this happen".

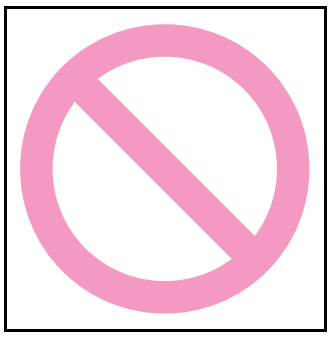

FOREWORD

This SUPPLEMENTARY SERVICE MANUAL is a supplement to Jimny (SN413/SN415D) SERVICE MANUAL. It has been prepared exclusively for the following applicable model.

Applicable models: Jimny M13 Engine Vehicles (SN413) and Jimny K9K Engine Vehicles (SN415D) with the following vehicle identification numbers (VINs).

M13 engine model	K9K engine model
☒ JSAFJB43V#0 300001 ☒ ~	☒ JSAFJB53V00 300001 ☒ ~
☒ JSAFJB43V#4 300001 ☒ ~	
JS3JB43V ☐ #4 300001 ~	

☐ : Check digit (0 – 9 and X)

This supplementary service manual describes only different service information of the above applicable model as compared with Jimny (SN413) SERVICE MANUAL. Therefore, whenever servicing the above applicable models, consult this supplement first. And for any section, item or description not found in this supplement, refer to the related manual below.

When replacing parts or servicing by disassembling, it is recommended to use SUZUKI genuine parts, tools and service materials as specified in each description.

All information, illustrations and specifications contained in this literature are based on the latest product information available at the time of publication approval. And used as the main subject of description is the vehicle of standard specifications among others.
Therefore, note that illustrations may differ from the vehicle being actually serviced.
The right is reserved to make changes at any time without notice.

NOTE:

"SUZUKI Dealers" means Authorized Suzuki Service Workshop (in Europe).

RELATED MANUAL:

Manual Name	Manual No.	M13 engine model	K9K engine model
Jimny (SN413) SERVICE MANUAL	99500-81A10-01E	Applicable	Applicable
Jimny (SN415D) SUPPLEMENTARY SERVICE MANUAL (with K9K engine)	99501-84A00-01E	Not applicable	Applicable
Jimny (SN413/SN415D) SUPPLEMENTARY SERVICE MANUAL	99501-81A10-01E	Applicable	Applicable
Jimny (SN413/SN415D) WIRING DIAGRAM MANUAL	99512-81A50-015	Applicable	Applicable

SUZUKI MOTOR CORPORATION

© COPYRIGHT SUZUKI MOTOR CORPORATION 2006

RECOMMENDATON OF GENUINE SUZUKI PARTS AND ACCESSORIES USE

SUZUKI strongly recommends the use of genuine SUZUKI parts* and accessories. Genuine SUZUKI parts and accessories are built to the highest standards of quality and performance, and are designed to fit the vehicle's exact specifications.

A wide variety of non-genuine replacement parts and accessories for SUZUKI vehicles are currently available in the market. Using these parts and accessories can affect the vehicle performance and shorten its useful life. Therefore, installation of non-genuine SUZUKI parts and accessories is not covered under warranty.

Non-Genuine SUZUKI Parts and Accessories
Some parts and accessories may be approved by certain authorities in your country.
Some parts and accessories are sold as SUZUKI authorized replacement parts and accessories. Some genuine SUZUKI parts and accessories are sold as re-use parts and accessories. These parts and accessories are non-genuine Suzuki parts and accessories and use of these parts are not covered under warranty.

Re-use of Genuine SUZUKI Parts and Accessories
The resale or re-use of the following items which could give rise to safety hazards for users is expressly forbidden:

1) Air bag components and all other pyrotechnic items, including their components (e.g. cushion, control devices and sensors)
2) Seatbelt system, including their components (e.g. webbing, buckles, and retractors)

The air bag and seat belt pretensioner components contain explosive chemicals. These components should be removed and disposed of properly by SUZUKI authorized service shop or scrap yard to avoid unintended explosion before scrapping.

*The parts remanufactured under SUZUKI's approval can be used as genuine SUZUKI parts in Europe.

TABLE OF CONTENTS

GENERAL INFORMATION	
General Information	0A
Maintenance and Lubrication	0B
HEATING AND AIR CONDITIONING	
Heater and Ventilation	1A
Air Conditioning (Optional)	1B
STEERING, SUSPENSION, WHEELS AND TIRES	
Steering, Suspension, Wheels and Tires	3
Front Wheel Alignment	3A
Steering Gear Box (Manual Type) and Linkage	3B
Power Steering (P/S) System (if equipped)	3B1
Steering Wheel and Column	3C
Front Suspension	3D
Rear Suspension	3E
Wheels and Tires	3F
DRIVE SHAFT AND PROPELLER SHAFT	
Propeller Shafts	4B
BRAKE SYSTEM	
Brakes	5
Antilock Brake System (ABS)	5E
ENGINE	
Engine General Information and Diagnosis (M13 Engine without VVT)	6-1
Engine General Information and Diagnosis (K9K Engine)	6-2
Engine General Information and Diagnosis (M13 Engine with VVT)	6-3
Engine Mechanical (M13 Engine without VVT)	6A1
Engine Mechanical (K9K Engine)	6A2
Engine Mechanical (M13 Engine with VVT)	6A3
Engine Cooling (M13 Engine)	6B
Engine Cooling (K9K Engine)	6B2
Engine Fuel (M13 Engine)	6C
Engine Fuel (K9K Engine)	6C2
Engine and Emission Control System (M13 Engine)	6E
Engine and Emission Control System (K9K Engine)	6E2
Ignition System (Electronic Ignition System)	6F
Cranking System (M13 Engine)	6G
Cranking System (K9K Engine)	6G2
Charging System (M13 Engine)	6H
Charging System (K9K Engine)	6H2
Exhaust System (M13 Engine)	6K
Exhaust System (K9K Engine)	6K2
TRANSMISSION, CLUTCH AND DIFFERENTIAL	
Manual Transmission (M13 Engine Model)	7A
Manual Transmission (K9K Engine Model)	7A2
Automatic Transmission	7B
Clutch (M13 Engine Model)	7C
Clutch (K9K Engine Model)	7C2
Transfer	7D
Front Differential	7E
Rear Differential	7F
ELECTRICAL SYSTEM	
Body Electrical System	8
Immobilizer Control System (M13 Engine Model) (if equipped)	8G
Immobilizer Control System (K9K Engine Model)	8G2
BODY SERVICE	
Body Service	9
RESTRAINT SYSTEM	
Restraint System	10
Air Bag System	10B

0A 6E
0B 6E2
6F
1A 6G
1B 6G2
6H
3 6H2
3A 6K
3B 6K2
3B1
3C 7A
3D 7A2
3E 7B
3F 7C
7C2
4B 7D
7E
5 7F
5E
8
6-1 8G
6-2 8G2
6-3
6A1 9
6A2
6A3 10
6B 10B
6B2
6C
6C2

NOTE:

For the screen toned Section in the above table, refer to the same section of the Service Manuals mentioned in FOREWORD of this manual.

SECTION 0A

GENERAL INFORMATION

NOTE:

For the items with asterisk (*) in the "CONTENTS" below, refer to the same section of the Service Manual mentioned in "FOREWORD" of this Manual.

CONTENTS

How to Use This Manual ..... 0A- *
Precautions 0A-2
- Precaution for Vehicles Equipped with a Supplemental Restraint (Air Bag) System .... 0A- *
  - Diagnosis ..... 0A- *
  - Servicing and handling ..... 0A- *
- General Precautions 0A-2
- Precaution for CAN Communication System ..... 0A- *
- Precautions For Catalytic Converter ..... 0A- *
- Precautions For Electrical Circuit Service .... 0A- *
- Electrical Circuit Inspection Procedure ..... 0A- *
  - Open circuit check ..... 0A- *
  - Short circuit check (wire harness to ground) ..... 0A- *
- Intermittent and Poor Connection ..... 0A- *
- Precaution For Installing Mobile Communication Equipment ..... 0A- *

Identification Information ..... 0A- *
- Body Number ..... 0A- *
- Engine Identification Number ..... 0A- *
- Transmission Identification Number ..... 0A- *

Warning, Caution and Information Labels ..... 0A- *
Vehicle Lifting Points ..... 0A- *
- When Using Frame Contact Hoist ..... 0A- *
- When Using Floor Jack ..... 0A- *

Abbreviations May Be Used In This Manual ..... 0A- *
- Abbreviations ..... 0A- *

Fasteners Information ..... 0A- *
- Metric Fasteners ..... 0A- *
- Fastener Strength Identification ..... 0A- *
- Standard Tightening Torque ..... 0A- *

Precautions

General Precautions

The WARNING and CAUTION below describe some general precautions that you should observe when servicing a vehicle. These general precautions apply to many of the service procedures described in this manual, and they will not necessarily be repeated with each procedure to which they apply.

WARNING:

- **Whenever raising a vehicle for service, be sure to follow the instructions under "Vehicle Lifting Points" in this section.**
- **When it is necessary to do service work with the engine running, make sure that the parking brake is set fully and the transmission is in Neutral (for manual transmission vehicles) or Park (for automatic transmission vehicles), Keep hands, hair, clothing, tools, etc. away from the fan and belts when the engine is running.**
- **When it is necessary to run the engine indoors, make sure that the exhaust gas is forced outdoors.**
- **Do not perform service work in areas where combustible materials can come in contact with a hot exhaust system. When working with toxic or flammable materials (such as gasoline and refrigerant), make sure that the area you work in is well-ventilated.**
- **To avoid getting burned, keep away from hot metal parts such as the radiator, exhaust manifold, tailpipe, muffler, etc.**
- **New and used engine oil can be hazardous. Children and pets may be harmed by swallowing new or used oil. Keep new and used oil and used engine oil filters away from children and pets.**
  Continuous contact with used engine oil has been found to cause [skin] cancer in laboratory animals. Brief contact with used oil may irritate skin. To minimize your exposure to used engine oil, wear a long-sleeve shirt and moisture-proof gloves (such as dish washing gloves) when changing engine oil. If engine oil contacts your skin, wash thoroughly with soap and water. Launder any clothing or rags if wet with oil, recycle or properly dispose of used oil and filters.
- **Be sure to observe following instructions when handling service materials such as fuel, oil, fluid, coolant, grease, sealant, thread lock cement, etc. Otherwise, your health may be ruined.**
  - **Whenever handling any of these service materials, wear safety glasses to protect your eyes. If it gets into your eye, it may cause inflammation.**
  - **Whenever handling any of these service materials, wear moisture-proof gloves to protect your skin. If it adheres to your skin, it may cause inflammation.**
  - **Do not swallow any of these service materials. It would cause diarrhea or nausea.**
  - **Keep all these materials out of children's reach.**
- **Make sure the bonnet is fully closed and latched before driving. If it is not, it can fly up unexpectedly during driving, obstructing your view and resulting in an accident.**

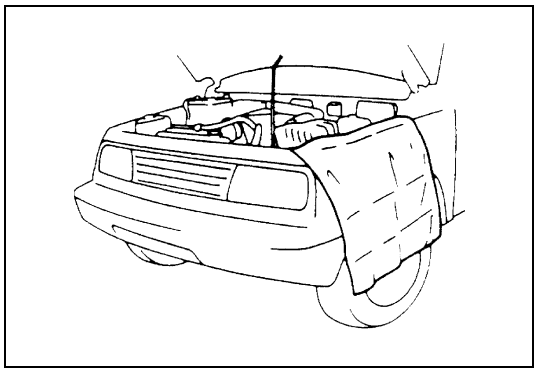

- **Before starting any service work, cover fenders, seats and any other parts that are likely to get scratched or stained during servicing. Also, be aware that what you wear (e.g, buttons) may cause damage to the vehicle's finish.**

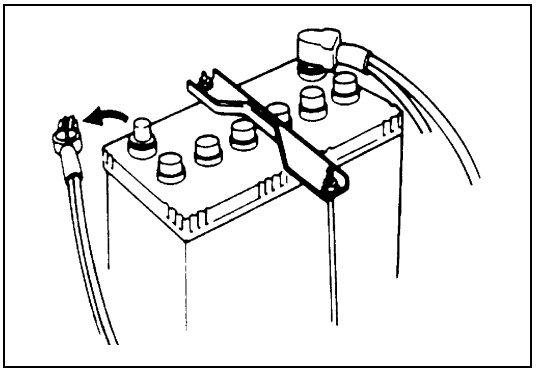

- When performing service to electrical parts that does not require use of battery power, disconnect the negative cable of the battery.
- When disconnecting the negative cable from the battery, be careful to the following.
  – Check and record DTCs in ECM and immobilizer control module if necessary before disconnecting.
  – Record displayed contents of the clock and/or audio system, etc. before disconnecting and reset it as before after connecting.

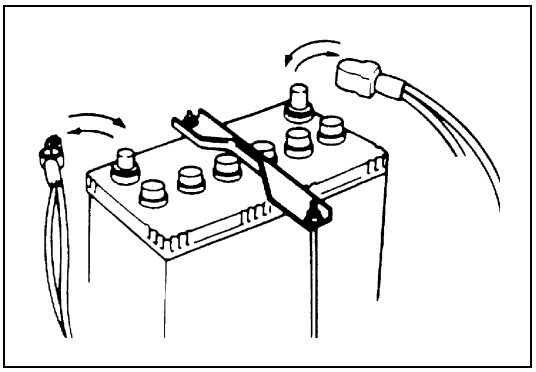

- When removing the battery, be sure to disconnect the negative cable first and then the positive cable. When reconnecting the battery, connect the positive cable first and then the negative cable, and replace the terminal cover.

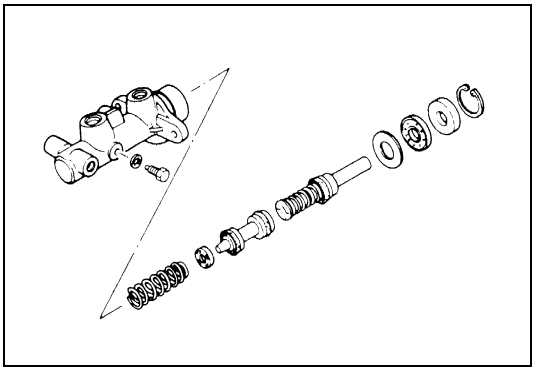

- When removing parts that are to be reused, be sure to keep them arranged in an orderly manner so that they may be reinstalled in the proper order and position.

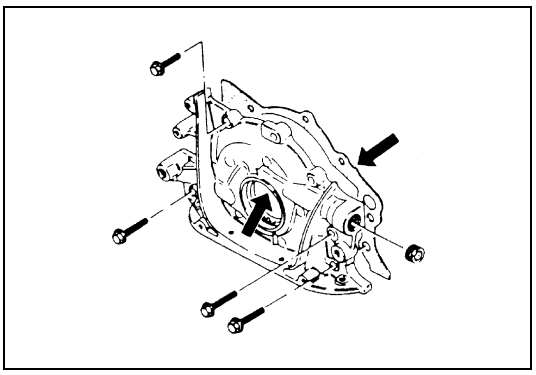

- Whenever you use oil seals, gaskets, packing, O-rings, locking washers, split pins, self-locking nuts, and certain other parts as specified, be sure to use new ones. Also, before installing new gaskets, packing, etc., be sure to remove any residual material from the mating surfaces.

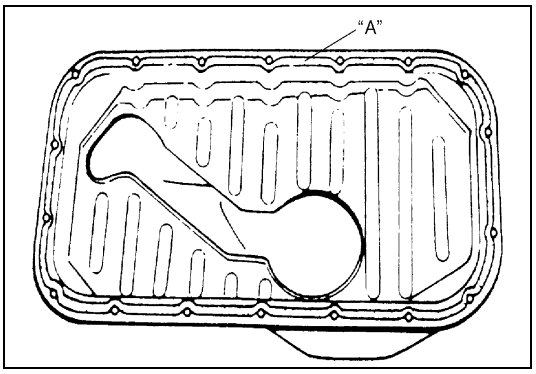

- Make sure that all parts used in reassembly are perfectly clean.
- When use of a certain type of lubricant, bond or sealant is specified, be sure to use the specified type.

"A": Sealant 99000-31150

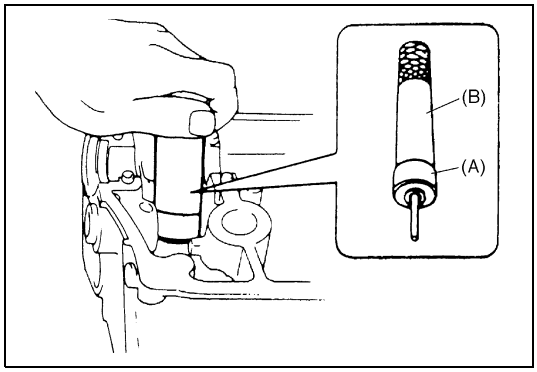

- **Be sure to use special tools when instructed.**

Special tool
(A): 09917-98221
(B): 09916-58210

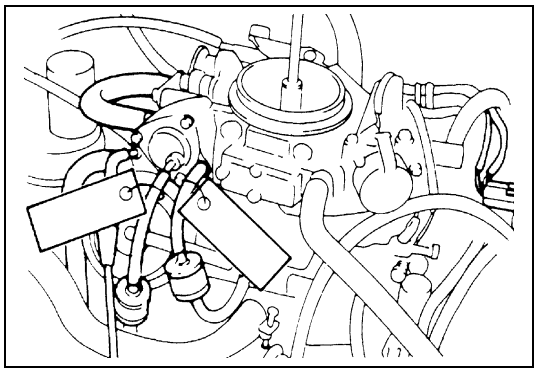

- **When disconnecting vacuum hoses, attach a tag describing the correct installation positions so that the hoses can be reinstalled correctly.**

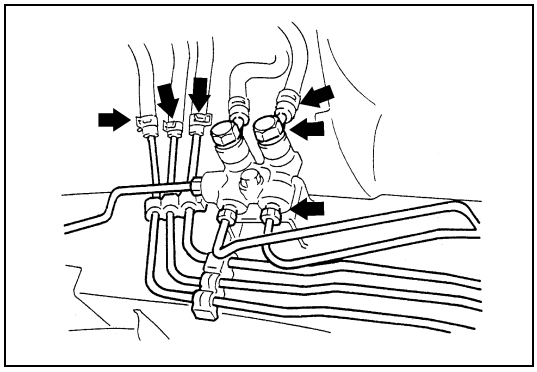

- **After servicing fuel, oil, coolant, vacuum, exhaust or brake systems, check all lines related to the system for leaks.**

- **For vehicles equipped with petrol engine, never disconnect the fuel line between the fuel pump and injector without first releasing the fuel pressure, or fuel can be sprayed out under pressure.**
  Refer to "Fuel Pressure Relief Procedure" in Section 6 for fuel pressure releasing.
- **For vehicles equipped with diesel engine, never disconnect fuel high-pressure line between injection pump and injectors under pressure, or fuel can be sprayed out under pressure.**
  Be sure to confirm that fuel high-pressure line is not under pressure referring to "Fuel pressure relief confirmation procedures" in Section 6E2 before disconnecting.
  If it is under pressure, wait till it is not under pressure.

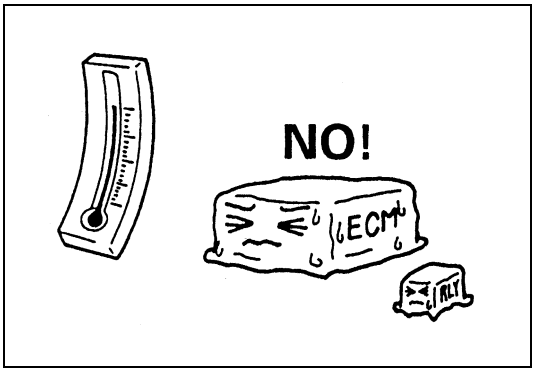

- **When performing a work that produces a heat exceeding 80°C (176°F) in the vicinity of the electrical parts, remove the heat sensitive electrical part(s) beforehand.**

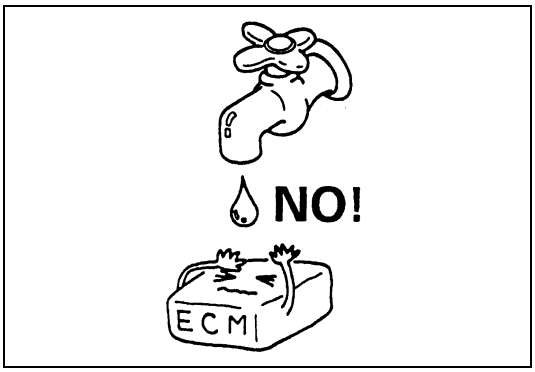

- **Use care not to expose connectors and electrical parts to water which will be a cause of a trouble.**

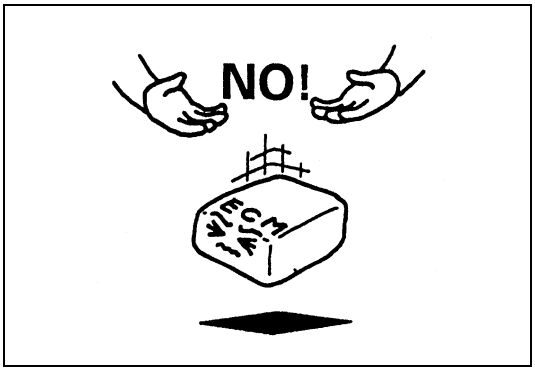

- **Always be careful not to handle electrical parts (computer, relay, etc.) in a rough manner or drop them.**

SECTION 0B

MAINTENANCE AND LUBRICATION

WARNING:

For vehicles equipped with a Supplemental Restraint (Air Bag) System:

- **Service on and around the air bag system components or wiring must be performed only by an authorized SUZUKI dealer. Refer to "Air Bag System Components and Wiring Location View" under "General Description" in air bag system section in order to confirm whether you are performing service on or near the air bag system components or wiring. Please observe all WARNINGS and "Service Precautions" under "On-Vehicle Service" in air bag system section before performing service on or around the air bag system components or wiring. Failure to follow WARNINGS could result in unintentional activation of the system or could render the system inoperative. Either of these two conditions may result in severe injury.**
- **Technical service work must be started at least 90 seconds after the ignition switch is turned to the "LOCK" position and the negative cable is disconnected from the battery. Otherwise, the system may be activated by reserve energy in the Sensing and Diagnostic Module (SDM).**

NOTE:

For the items with asterisk (*) in the "CONTENTS" below, refer to the same section of the Service Manual mentioned in "FOREWORD" of this Manual.

CONTENTS

M13 Engine Model
Maintenance Schedule 0B-3
Maintenance Schedule Under Normal Driving Conditions 0B-3
Maintenance Recommended Under Severe Driving Conditions 0B-6
Maintenance Service 0B-8
Engine ..... 0B- *
Drive Belt ..... 0B- *
Valve Lash ..... 0B- *
Engine Oil and Filter ..... 0B- *
Engine Coolant ..... 0B- *
Exhaust System ..... 0B- *
Ignition System ..... 0B- *
Spark Plugs ..... 0B- *
Fuel System ..... 0B- *
Air Cleaner Filter ..... 0B- *
Fuel Lines and Connections ..... 0B- *
Fuel Filter ..... 0B- *
Fuel Tank ..... 0B- *
Emission Control System ..... 0B- *
Crankcase Ventilation Hoses and Connections ..... 0B- *
PCV (Positive Crankcase Ventilation) Valve ..... 0B- *
Fuel Evaporative Emission Control System ..... 0B- *
Chassis and Body 0B-11
Clutch ..... 0B- *
Brake Discs and Pads ..... 0B- *
Brake Drums and Shoes ..... 0B- *
Brake Hoses and Pipes ..... 0B- *
Brake Fluid ..... 0B- *
Parking Brake Lever and Cable ..... 0B- *
Tires/Wheels ..... 0B- *
Suspension System ..... 0B- *
Propeller Shafts ..... 0B- *
Manual Transmission Oil ..... 0B- *
Automatic Transmission Fluid 0B-11
Transfer and Differential Oil ..... 0B- *
Steering System ..... 0B- *
Steering Knuckle Seal ..... 0B- *
Power Steering (P/S) System (if equipped) ..... 0B- *
All Hinges, Latches and Locks ..... 0B- *
Final Inspection ..... 0B- *
Recommended Fluids and Lubricants ..... 0B- *

K9K Engine Model

Maintenance Schedule 0B-3
Maintenance Schedule Under Normal Driving Conditions 0B-3
Maintenance Recommended Under Severe Driving Conditions 0B-6
Maintenance Service 0B-8
Engine (K9K) 0B-8
Drive Belt ..... 0B- *
Engine oil and filter (K9K Engine) 0B-8
Engine Coolant ..... 0B- *
Exhaust System ..... 0B- *
Fuel System 0B-10
Air Cleaner Filter ..... 0B- *
Fuel Lines and Connections ..... 0B- *
Fuel Filter 0B-10
Water Draining of Fuel Filter 0B-10
Fuel Tank ..... 0B- *
Chassis and Body ..... 0B- *
Clutch ..... 0B- *
Brake Discs and Pads ..... 0B- *
Brake Drums and Shoes ..... 0B- *
Brake Hoses and Pipes ..... 0B- *
Brake Fluid ..... 0B- *
Parking Brake Lever and Cable ..... 0B- *
Tires/Wheels ..... 0B- *
Suspension System ..... 0B- *
Propeller Shafts ..... 0B- *
Manual Transmission Oil ..... 0B- *
Transfer and Differential Oil ..... 0B- *
Steering System ..... 0B- *
Steering Knuckle Seal ..... 0B- *
Power Steering (P/S) System (if equipped) ..... 0B- *
All Hinges, Latches and Locks ..... 0B- *
Final Inspection ..... 0B- *
Recommended Fluids and Lubricants ..... 0B- *

Maintenance Schedule

Maintenance Schedule Under Normal Driving Conditions

NOTE:

- **This interval should be judged by odometer reading or months, whichever comes first.**
- **This table includes service as scheduled up to 90,000 km (54,000 miles) mileage. Beyond 90,000 km (54,000 miles), carry out the same services at the same intervals respectively.**

M13 Engine Model:

Interval			Km (x 1,000)	15	30	45	60	75	90
			Miles (x 1,000)	9	18	27	36	45	54
			Months	12	24	36	48	60	72
ENGINE									
Drive belt			V-belt	I	R	I	R	I	R
			V-rib belt (Flat type)	–	–	I	–	–	R
Valve lash (clearance)				–	I	–	I	–	I
Engine oil and oil filter				R	R	R	R	R	R
Engine coolant				–	–	R	–	–	R
Exhaust system				–	I	–	I	–	I
IGNITION SYSTEM									
✱Spark plugs	When unleaded fuel is used	Vehicle without HO2S	Nickel spark plug	–	R	–	R	–	R
			Iridium spark plug	–	–	R	–	–	R
		Vehicle with HO2S	Nickel spark plug	–	–	R	–	–	R
			Iridium spark plug	–	–	–	R	–	–
	When leaded fuel is used, refer to “Maintenance Recommended Under Severe Driving Conditions” in this section.								
FUEL SYSTEM									
Air cleaner filter				I	I	R	I	I	R
Fuel lines and connections				–	I	–	I	–	I
Fuel filter				Replace every 210,000 km (126,000 miles).					
Fuel tank				–	–	I	–	–	I
EMISSION CONTROL SYSTEM									
Crankcase ventilation hoses and connections (Vehicle without HO2S)				–	–	I	–	–	I
✱PCV valve		Vehicle without HO2S		–	–	I	–	–	I
		Vehicle with HO2S		–	–	–	–	–	I
✱Fuel evaporative emission control system		Vehicle without HO2S		–	I	–	I	–	I
		Vehicle with HO2S		–	–	–	–	–	I

NOTE:

"R": Replace or change

"I": Inspect and correct, replace or lubricate if necessary

- **For Sweden, items with ∗ (asterisk) should be performed by odometer reading only.**
- **For spark plugs, replace every 50,000 km if the local law requires.**
- **Nickel spark plug: BKR6E-11 (NGK) or K20PR-U11 (DENSO)**
- **Iridium spark plug: IFR5E11 (NGK) or SK16PR-A11 (DENSO)**

K9K Engine Model:

Interval	Km (x 1,000)	15	30	45	60	75	90
	Miles (x 1,000)	9	18	27	36	45	54
	Months	12	24	36	48	60	72
ENGINE							
Engine accessory drive belt		–	–	–	–	R	–
Camshaft timing belt and tensioner		–	–	–	–	R	–
Engine oil and oil filter *1		R	R	R	R	R	R
Engine coolant		–	R	–	R	–	R
Exhaust system		–	I	–	I	–	I
FUEL SYSTEM							
Air cleaner filter		I	I	R	I	I	R
Fuel lines and connections		–	I	–	I	–	I
Fuel filter		–	–	R	–	–	R
		Drain water every 15,000 km or 9,000 miles					
Fuel tank		–	–	I	–	–	I

NOTE:

"R": Replace or change

"I": Inspect and correct, replace or lubricate if necessary

- **Some maintenance items are required to be serviced at times other than the regular maintenance times shown at the top of above table. These items can be serviced at an earlier service opportunity according to customer's maintenance convenience. Their next maintenance service should be done within the specified period.**
- ***1: Inspect every 2,000 km (1,200 miles) until mileage of 5,000 km (3,000 miles)**

M13 and K9K Engine Models:

Interval	Km (x 1,000)	15	30	45	60	75	90
	Miles (x 1,000)	9	18	27	36	45	54
	Months	12	24	36	48	60	72
CHASSIS AND BODY							
Clutch (pedal height and travel for cable type / fluid leakage and level for hydraulic type)		–	I	–	I	–	I
Brake discs and pads (thickness, wear, damage)		I	I	I	I	I	I
Brake drums and shoes (wear, damage)		–	I	–	I	–	I
Brake hoses and pipes (leakage, damage, clamp)		–	I	–	I	–	I
Brake fluid		–	R	–	R	–	R
Brake lever and cable (damage, stroke, operation)		Inspect at first 15,000 km (9,000 miles) only.					
Tires (wear, damage, rotation)		I	I	I	I	I	I
Wheel discs (damage)		I	I	I	I	I	I
Suspension system (tightness, damage, rattle, breakage)		–	I	–	I	–	I
Propeller shafts		–	–	I	–	–	I
Manual transmission oil (leakage, level) (I: 1st 15,000 km only)		I	–	R	–	–	R
Automatic transmission	Fluid level	–	I	–	I	–	I
	Fluid change	Replace every 165,000 km (99,000 miles).					
	Fluid hose	–	–	–	I	–	–
Transfer oil (leakage, level)		I	–	I	–	I	–
Differential oil (leakage, level) (R: 1st 15,000 km only)		R or I	–	I	–	I	–
Steering system (tightness, damage, breakage, rattle)		–	I	–	I	–	I
Power steering (if equipped)		I	I	I	I	I	I
All latches, hinges and locks		–	I	–	I	–	I

NOTE:

“R”: Replace or change

“I”: Inspect and correct, replace or lubricate if necessary

Maintenance Recommended Under Severe Driving Conditions

If the vehicle is usually used under the conditions corresponding to any severe condition code given below, it is recommended that applicable maintenance operation be performed at the particular interval as shown in the following table.

Severe condition code

A : Repeated short trips
B : Driving on rough and/or muddy roads
C : Driving on dusty roads
D : Driving in extremely cold weather and/or salted roads
E : Repeated short trips in extremely cold weather
F : Leaded fuel use
G : Low quality fuel use (For K9K diesel engine only)
H : Trailer towing (if admitted)

M13 Engine Model:

Severe Condition Code	Maintenance		Maintenance Operation	Maintenance Interval
– B C D – – – –	Drive belt (V-rib belt)		I	Every 15,000 km (9,000 miles) or 12 months
			R	Every 45,000 km (27,000 miles) or 36 months
A – C D E F – H	Engine oil and oil filter		R	Every 7,500 km (4,500 miles) or 6 months
– B – – – – – –	Exhaust pipe mountings		I	Every 15,000 km (9,000 miles) or 12 months
– – C – – – – –	Air cleaner filter ✱1		I	Every 2,500 km (1,500 miles)
			R	Every 30,000 km (18,000 miles) or 24 months
A B C – E F – H	Spark plugs	Nickel spark plug	R	Every 10,000 km (6,000 miles) or 8 months
		Iridium spark plug	R	Every 30,000 km (18,000 miles) or 24 months
– B C D – – – H	Wheel bearing		I	Every 15,000 km (9,000 miles) or 12 months
– B – – – – – –	Suspension bolts and nuts		T	Every 15,000 km (9,000 miles) or 12 months
– B – D E – – H	Propeller shafts		I	Every 15,000 km (9,000 miles) or 12 months
– B – – E – – H	Manual transmission, transfer and differential oil		R	First time only: 15,000 km (9,000 miles) or 12 months
				Second time and after: Every 30,000 km (18,000 miles) or 24 months reckoning from 0 km (0 mile) or 0 month
– B – – E – – H	Automatic transmission fluid		R	Every 30,000 km (18,000 miles) or 24 months
– B C D – – – –	Steering knuckle seal		I	Every 15,000 km (9,000 miles) or 12 months

NOTE:

- **"I": Inspect and correct, replace or lubricate if necessary**
- **"R": Replace or change**
- **"T": Tighten to the specified torque**
- **✱1: Inspect or replace more frequently if necessary**

K9K Engine Model:

Severe Condition Code	Maintenance	Maintenance Operation	Maintenance Interval
– B C D – – – –	Engine accessory drive belt	R	Every 30,000 km (18,000 miles) or 24 months
A – C D E – – –	Camshaft timing belt and tensioner	R	Every 60,000 km (36,000 miles) or 48 months
A – C D E – – H	Engine oil and oil filter	R	Every 7,500 km (4,500 miles) or 6 months
– B – – – – – –	Exhaust pipe mountings	I	Every 15,000 km (9,000 miles) or 12 months
– – C – – – – –	Air cleaner filter *1	I	Every 2,500 km (1,500 miles)
		R	Every 30,000 km (18,000 miles) or 24 months
– – – – – – G –	Fuel filter	R	Every 5,000 km (3,000 miles)
– B C D – – – H	Wheel bearing	I	Every 15,000 km (9,000 miles) or 12 months
– B – – – – – –	Suspension bolts and nuts	T	Every 15,000 km (9,000 miles) or 12 months
– B – D E – – H	Propeller shafts	I	Every 15,000 km (9,000 miles) or 12 months
– B – – E – – H	Manual transmission, transfer and differential oil	R	First time only: 15,000 km (9,000 miles) or 12 months
			Second time and after: Every 30,000 km (18,000 miles) or 24 months reckoning from 0 km (0 mile) or 0 month
– B C D – – – –	Steering knuckle seal	I	Every 15,000 km (9,000 miles) or 12 months

NOTE:

- **"I": Inspect and correct, replace or lubricate if necessary**
- **"R": Replace or change**
- **"T": Tighten to the specified torque**
- ***1: Inspect or replace more frequently if necessary**

Maintenance Service

Engine (K9K)

Engine oil and filter (K9K Engine)

Change

WARNING:
- **New and used engine oil can be hazardous. Be sure to read "WARNING" in General Precaution in Section 0A and observe what in written there.**
- **Step 1) – 7) outlined below must be performed with ENGINE NOT RUNNING. For step 8), be sure to have adequate ventilation while engine is running.**

Before draining engine oil, check engine for oil leakage. If any evidence of leakage is found, make sure to correct defective part before proceeding to the following work.

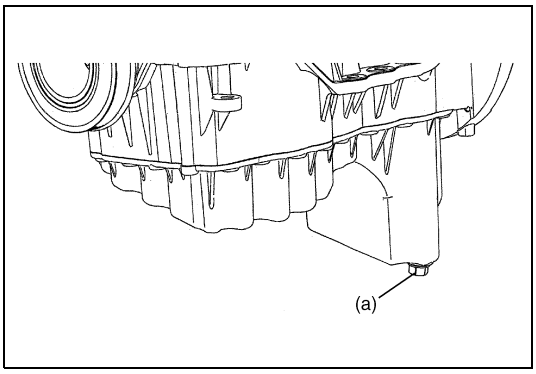

1) Drain engine oil by removing drain plug.
2) After draining oil, wipe drain plug clean. Reinstall drain plug, and tighten it securely as specified below.

Tightening torque
(a): 35 N·m (3.5 kg-m, 25.5 lb-ft)

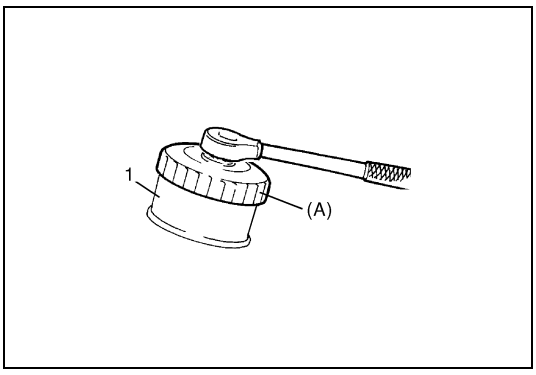

3) Loosen oil filter (1) by using oil filter wrench (special tool).

Special tool
(A): 09915-46510

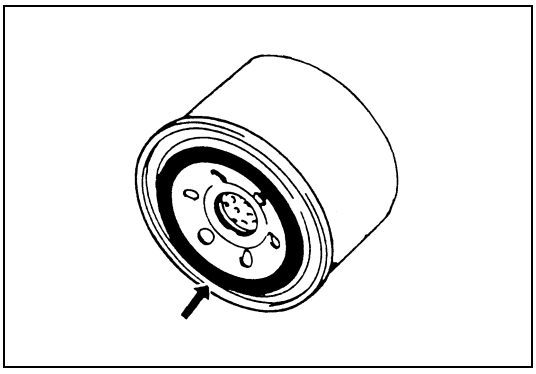

NOTE:

Before fitting new oil filter, be sure to oil its O-ring. Use engine oil for this purpose.

4) Screw new filter on oil filter stand by hand until the filter O-ring contacts the mounting surface.

CAUTION:

To tighten oil filter properly, it is important to accurately identify the position at which filter O-ring first contacts the mounting surface.

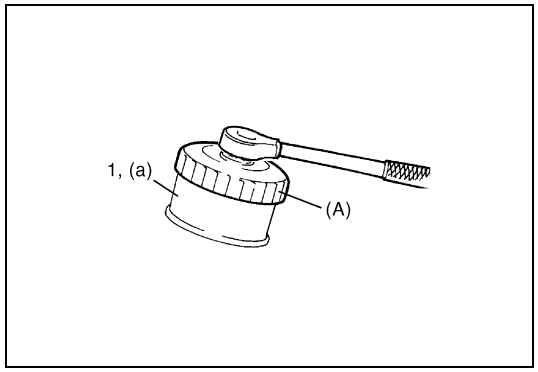

5) Tighten the filter (1) 3/4 turn from the point of contact with the mounting surface using an oil filter wrench (special tool).

Special tool
(A): 09915-46510

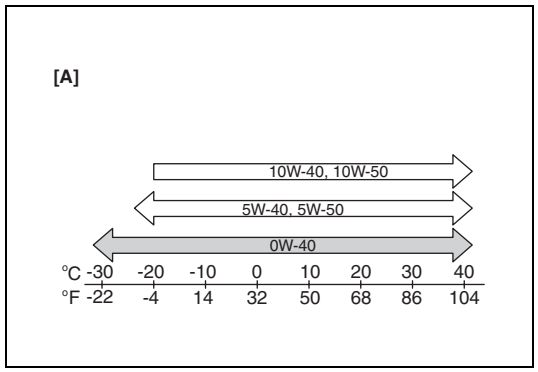

6) Replenish oil until oil level is brought to FULL level mark on dipstick. (about 4.9 liters (8.6 Imp pt.)). The filler inlet is at the top of the cylinder head cover.
Use engine oil of ACEA standard B3/B4 grade.
Select the appropriate oil viscosity according to the proper engine oil viscosity chart [A].
However, it is recommended to use 0W-40 oil under ambient temperatures below –15 °C (5 °F)

NOTE:

Note that the amount of oil required when actually changing oil may somewhat differ from the data depending on various conditions (temperature, viscosity, etc.)

7) Check oil filter and drain plug for oil leakage.

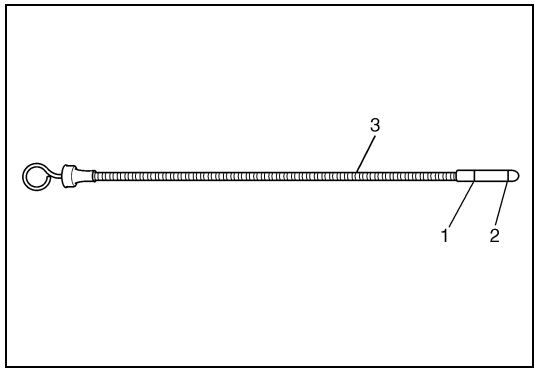

8) Start engine and run it for three minutes. Stop it and wait five minutes before checking oil level. Add oil, as necessary, to bring oil level to FULL level mark (1) on oil level gauge (3).

2. Low level mark

Inspection

1) Check engine for oil leakage. If any evidence of leakage is found, repair defective part.
2) Check engine oil for level according to step 8) of “Engine Oil and filter change” in this section.

Fuel System

Fuel Filter

Replacement

WARNING:

This work must be performed in a well ventilated area and away from any open flames (such as gas hot water heaters).

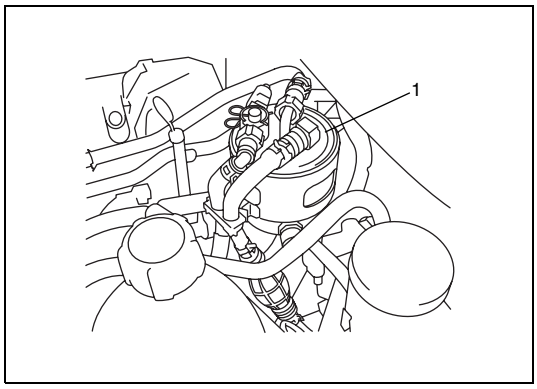

Replace fuel filter (1) with new one periodically, referring to “Fuel Filter Removal and Installation” in Section 6C2.

Water Draining of Fuel Filter

Bleed fuel filter of water referring to “Water Draining of Fuel Filter” in Section 6C2.

Chassis and Body

Automatic Transmission Fluid

Inspection

1) Inspect transmission case for evidence of fluid leakage. Repair leaky point, if any.
2) Make sure that vehicle is placed level for fluid level check.

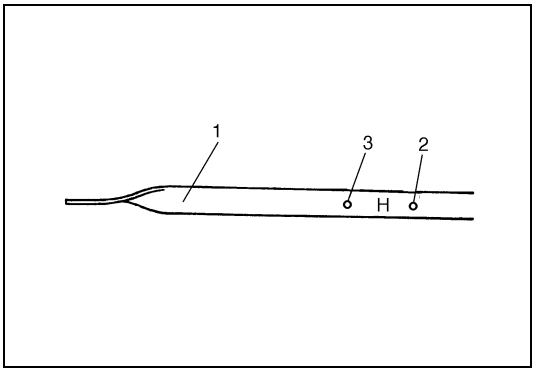

3) Check fluid level.
   For fluid level checking procedure, refer to “Fluid Level Check” in Section 7B and be sure to perform it under specified conditions. If fluid level is low, replenish specified fluid.

1. Dipstick
2. “FULL HOT” mark
3. “LOW HOT” mark

Change

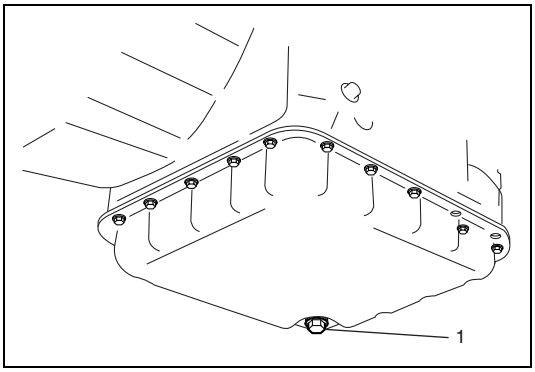

1) Inspect transmission case for evidence of fluid leakage. Repair leaky point, if any.
2) Make sure that vehicle is placed level for fluid level check.
3) Change fluid. For its procedure, refer to “Changing Fluid” in Section 7B.

CAUTION:
Use of specified fluid is absolutely necessary.

1. Drain plug

Fluid Cooler Hose Inspection

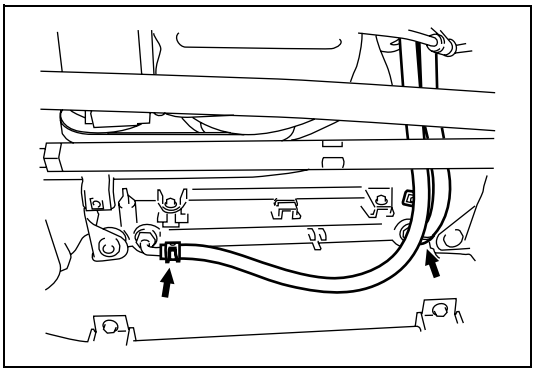

Check automatic transmission fluid cooler hoses for fluid leakage, cracks, damage and deterioration. Replace hose and/or clamp if any faulty condition is found.

SECTION 6-2

ENGINE GENERAL INFORMATION AND DIAGNOSIS (K9K ENGINE)

WARNING:

For vehicles equipped with a Supplemental Restraint (Air Bag) System:

- **Service on and around the air bag system components or wiring must be performed only by an authorized SUZUKI dealer. Refer to "Air Bag System Components and Wiring Location View" under "General Description" in air bag system section in order to confirm whether you are performing service on or near the air bag system components or wiring. Please observe all WARNINGS and "Precautions" under "On-Vehicle Service" in air bag system section before performing service on or around the air bag system components or wiring. Failure to follow WARNINGS could result in unintentional activation of the system or could render the system inoperative. Either of these two conditions may result in severe injury.**
- **Technical service work must be started at least 90 seconds after the ignition switch is turned to the "LOCK" position and the negative cable is disconnected from the battery. Otherwise, the system may be activated by reserve energy in the Sensing and Diagnostic Module (SDM).**

CONTENTS

General Information 6-2-3
- Statement of Cleanliness and Care 6-2-3
- General Information on Engine Service 6-2-3
  - Precaution on fuel system service 6-2-4
  - Fuel pressure relief confirmation procedure 6-2-4
  - Fuel leakage check procedure 6-2-4

Engine Diagnosis 6-2-5
- General Description 6-2-5
- On-Board Diagnostic System 6-2-5
- Precaution in Diagnosing Trouble 6-2-7
- Engine Diagnostic Flow Table 6-2-9
  - Diagnostic step details 6-2-11
- Diagnostic Trouble Code (DTC) Check 6-2-12
- Diagnostic Trouble Code (DTC) Clearance 6-2-12
- Diagnostic Trouble Code (DTC) Table 6-2-13
- Indicator lamp operation table 6-2-16
- Visual Inspection 6-2-19
- Engine Basic Check 6-2-20
- Fault Finding – Fault Interpretation 6-2-21
  - DTC P0016 Crankshaft position – camshaft position correlation 6-2-21
  - DTC P0045 Turbo charger boost control solenoid circuit/open 6-2-22
  - DTC P0070 External air temperature sensor circuit malfunction 6-2-23
  - DTC P0087 Fuel rail/system pressure too low 6-2-24
  - DTC P0089 Fuel pressure regulator performance problem 6-2-25
  - DTC P0100 Mass air flow circuit 6-2-26
  - DTC P0115 Engine coolant temperature circuit malfunction 6-2-27
  - DTC P0170 Fuel trim 6-2-28
  - DTC P0180 Fuel temperature sensor circuit malfunction 6-2-30
  - DTC P0190 Fuel pressure sensor circuit malfunction 6-2-31
  - DTC P0200 Injector circuit 6-2-32
  - DTC P0201 Injector circuit malfunction – cylinder 1 6-2-34
  - DTC P0202 Injector circuit malfunction – cylinder 2 6-2-36
  - DTC P0203 Injector circuit malfunction – cylinder 3 6-2-38
  - DTC P0204 Injector circuit malfunction – cylinder 4 6-2-40
  - DTC P0225 Pedal position sensor 1 circuit 6-2-42
  - DTC P0231 Fuel pump secondary circuit low 6-2-44
  - DTC P0235 Turbo pressure sensor circuit malfunction 6-2-45

DTC P0263 Cylinder 1 contribution/ balance..... 6-2-47
DTC P0266 Cylinder 2 contribution/ balance..... 6-2-48
DTC P0269 Cylinder 3 contribution/ balance..... 6-2-49
DTC P0272 Cylinder 4 contribution/ balance..... 6-2-50
DTC P0325 Knock sensor circuit malfunction..... 6-2-51
DTC P0335 Crankshaft position sensor circuit malfunction 6-2-52
DTC P0340 Camshaft position sensor circuit malfunction 6-2-53
DTC P0380 Glow plug/heater circuit malfunction..... 6-2-54
DTC P0670 Glow plug module control circuit..... 6-2-54
DTC P0382 Glow plug/heater circuit B malfunction..... 6-2-55
DTC P0400 Exhaust gas recirculation flow..... 6-2-56
DTC P2413 Exhaust gas recirculation system performance..... 6-2-56
DTC P0403 Exhaust gas recirculation control circuit..... 6-2-58
DTC P0409 Exhaust gas recirculation sensor circuit..... 6-2-59
DTC P0480 Radiator cooling fan low speed control system malfunction..... 6-2-60
DTC P0481 Radiator cooling fan high speed control system malfunction..... 6-2-61
DTC P0487 Exhaust gas recirculation throttle position control circuit..... 6-2-62
DTC P0500 Vehicle speed sensor circuit malfunction 6-2-63
DTC P0513 Incorrect immobilizer key.... 6-2-64
DTC P0530 A/C refrigerant pressure sensor circuit..... 6-2-65
DTC P0560 System voltage..... 6-2-66
DTC P0571 Brake switch circuit..... 6-2-67
DTC P0604 Control module internal fail..... 6-2-68
DTC P0605 Control module program error..... 6-2-69
DTC P0606 Control module program error..... 6-2-69
DTC P062F Control module EEPROM failure 6-2-70
DTC P0641 Sensor reference voltage 1 circuit/open..... 6-2-71
DTC P0645 A/C compressor relay control circuit..... 6-2-73
DTC P0651: Sensor reference voltage 2 circuit/open 6-2-74
DTC P0685 Main relay control circuit malfunction 6-2-76
DTC P1641 Additional heater relay circuit 1 6-2-77
DTC P1642 Additional heater relay circuit 2 6-2-78
DTC P2120 Pedal position sensor 2 circuit 6-2-79
DTC P2226 Barometric pressure circuit malfunction 6-2-81
DTC P2263: Turbo charger boost system performance 6-2-81
Fault Finding – Customer Complaints 6-2-83
Table 1 No dialogue with the ECM 6-2-84
Table 2 The engine does not start 6-2-85
Table 3 The engine starts with difficulty or starts then stalls.....6-2-86
Table 4 Starting difficult with warm engine 6-2-87
Table 5 Rough idle speed (pumping).....6-2-88
Table 6 Idle speed too high/too low 6-2-89
Table 7 Unexpected acceleration/ deceleration and engine stalling 6-2-90
Table 8 Response fault.....6-2-91
Table 9 Engine stop/stalling.....6-2-92
Table 10 Engine jerking 6-2-93
Table 11 Lack of power.....6-2-94
Table 12 Too much power 6-2-95
Table 13 Excessive consumption 6-2-96
Table 14 Overspeed when lifting off accelerator or changing gear 6-2-97
Table 15 Engine dies on pulling away 6-2-98
Table 16 Engine rattling, noisy.....6-2-99
Table 17 Blue, white or black smoke 6-2-100
Table 18 Blue, black or white smoke when accelerating.....6-2-101
Fault Finding – Tests 6-2-102
Test 1: Low Pressure Circuit Check.....6-2-103
Test 2: Electrical Circuit Check.....6-2-103
Test 3: Injector Check.....6-2-104
Test 4: Parameter Check.....6-2-104
Test 5: Air Inlet Circuit Check 6-2-104
Test 6: ECM Check.....6-2-104
Test 7 High Pressure System Check....6-2-105
Test 8 High Pressure Circuit Sealing Test.....6-2-105
Test 9 Injector Sealing Check.....6-2-106
Test 11: Diesel filter check.....6-2-108
Special Tool 6-2-109

General Information

Statement of Cleanliness and Care

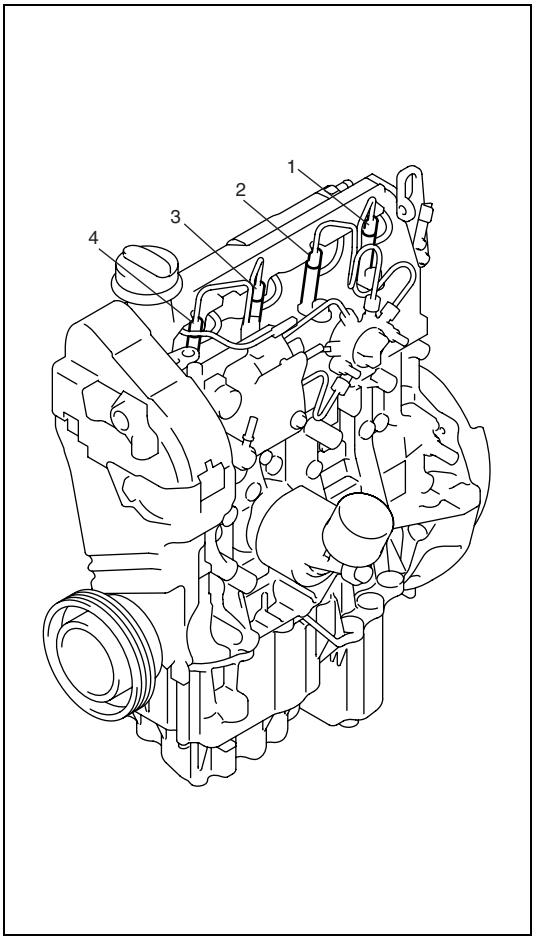

An automobile engine is a combination of many machined, honed, polished and lapped surfaces with tolerances that are measured in the thousands of an millimeter (ten thousands of inch). Accordingly, when any internal engine parts are serviced, care and cleanliness are important. Throughout this section, it should be understood that proper cleaning and protection of machined surfaces and friction areas is part of the repair procedure. This is considered standard shop practice even if not specifically stated.

- A liberal coating of engine oil should be applied to friction areas during assembly to protect and lubricate the surface on initial operation.
- Whenever valve train components, pistons, piston rings, connecting rods, rod bearings and crankshaft journal bearings are removed for service, they should be retained in order. At the time of installation, they should be installed in the same locations and with the same mating surfaces as when removed.
- Battery cables should be disconnected before any major work is performed on the engine. Failure to disconnect cables may result in damage to wire harness or other electrical parts.
- Throughout this manual, the four cylinders of the engine are identified by numbers: No.1 (1), No.2 (2), No.3 (3) and No.4 (4) as counted from flywheel side to crankshaft pulley side.

General Information on Engine Service

The following information on engine service should be noted carefully, as it is important in preventing damage, and in contributing to reliable engine performance.

- When raising or supporting engine for any reason, do not use a jack under oil pan. Due to small clearance between oil pan and oil pump strainer, jacking against oil pan may cause it to be bent against strainer resulting in damaged oil pick-up unit.
- It should be kept in mind, while working on engine, that 12-volt electrical system is capable of violent and damaging short circuits. When performing any work where electrical terminals could possibly be grounded, ground cable of the battery should be disconnected at battery.
- Any time the air cleaner, air cleaner outlet hose, turbocharger, intercooler, intercooler outlet hose, or intake manifold is removed, the intake opening should be covered. This will protect against accidental entrance of foreign material which could follow intake passage into cylinder and cause extensive damage when engine is started.

Precaution on fuel system service

- Work must be done with no smoking, in a well-ventilated area and away from any open flames.
- A small amount of fuel may be released after fuel line is disconnected.
  In order to reduce the chance of personal injury, cover fitting to be disconnected with a shop cloth. Put that cloth in an approved container when disconnection is completed.
- Never run engine with main relay disconnected when engine and exhaust system are hot.

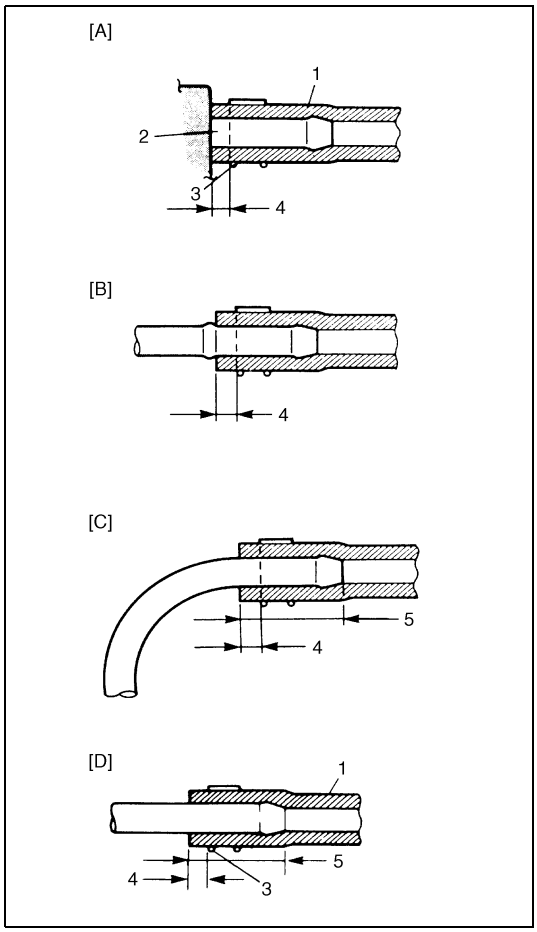

- Fuel or fuel vapor hose connection varies with each type of pipe. When reconnecting fuel or fuel vapor hose, be sure to connect and clamp each hose correctly referring to the figure.
  After connecting, make sure that it has no twist or kink.

[A]:	With short pipe, fit hose as far as it reaches pipe joint as shown.
[B]:	With following type pipe, fit hose as far as its peripheral projection as shown.
[C]:	With bent pipe, fit hose as its bent part as shown or till pipe is about 20 to 30 mm (0.79 – 1.18 in.) into the hose.
[D]:	With straight pipe, fit hose till pipe is, about 20 to 30 mm (0.79 – 1.18 in.) into the hose.
1.	Hose
2.	Pipe
3.	Clamp
4.	Clamp securely at a position 3 to 7 mm (0.12 – 0.27 in.) from hose end.
5.	20 to 30 mm (0.79 – 1.18 in.)

- Before starting any service on fuel system, refer to “Precautions in Fuel Delivery System” in Section 6E2.
- When installing fuel filter union bolt or plug bolt, always use new gasket and tighten it to specified torque.
- When installing injector, fuel feed pipe or fuel pressure regulator, lubricate its O-ring with spindle oil or fuel.
- When connecting fuel pipe flare nut, first tighten flare nut by hand and then tighten it to specified torque, using back-up wrench.

Fuel pressure relief confirmation procedure

The fuel system installed on the engine injects the high pressure fuel into the engine. Therefore, before starting fuel system service, confirm that fuel high pressure line is not under pressure referring to “Fuel Pressure Relief Confirmation Procedure” in Section 6E2.

Fuel leakage check procedure

After performing any service on fuel system, refer to “Fuel Leakage Check” in Section 6E2 to see if there is any fuel leakage.

Engine Diagnosis

General Description

The engine and emission control system in this vehicle are controlled by ECM. ECM has an On-Board Diagnostic system which detects a malfunction in this system and abnormality of those parts that influence the engine exhaust emission. When diagnosing engine troubles, be sure to have full understanding of the outline of “On-Board Diagnostic System” and each item in “Precaution in Diagnosing Trouble” and execute diagnosis according to “Engine Diagnostic Flow Table” in this section.

There is a close relationship between the engine mechanical, engine cooling system, exhaust system, etc. and the engine and emission control system in their structure and operation. In case of an engine trouble, even when the warning light (MIL, injection warning light, and/or red stop warning light) doesn’t turn ON, it should be diagnosed according to this flow table.

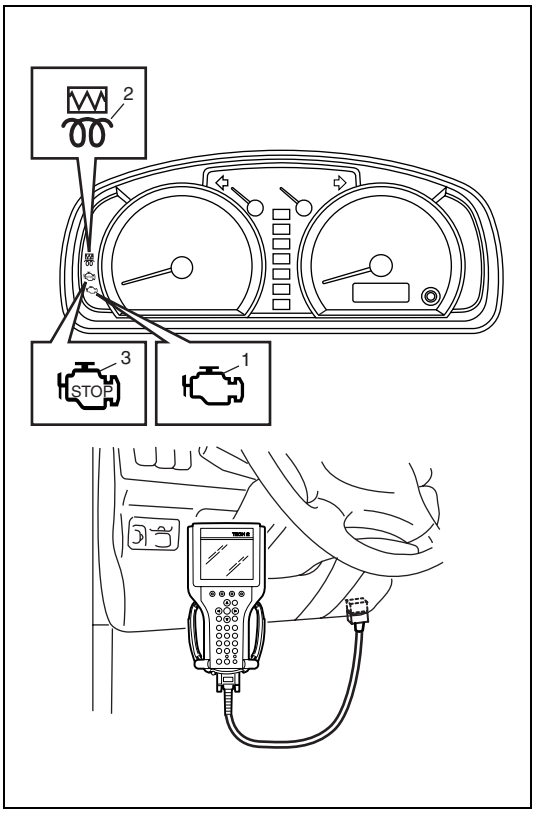

On-Board Diagnostic System

ECM in this vehicle has the following functions.

- When the ignition switch is turned ON with the engine at a stop, MIL (1), injection warning light (gravity 1 fault) (2) and/or red stop warning light (gravity 2 fault) (3) turns ON to check the warning lights and its circuit.
- When ECM detects a malfunction which gives an adverse effect to vehicle emission while the engine is running, it makes the malfunction indicator lamp in the meter cluster of the instrument panel turn ON and stores the malfunction area in its memory.
- When a malfunction is detected, a malfunction in some areas in the system and driving cycles then are stored in ECM memory (For the details, refer to description on “Indicator Lamp Operation Table” in this section.)

Warm-Up Cycle

A “warm-up cycle” means sufficient vehicle operation such that the coolant temperature has risen by at least 22 °C (40 °F) from engine starting and reaches a minimum temperature of 70 °C (160 °F).

Driving Cycle

A “driving cycle” consists of two parts, engine startup and engine shutoff.

3 Driving Cycle Detection Logic

The malfunction detected in the first driving cycle is stored in ECM memory (in the form of pending DTC) but the malfunction indicator lamp does not light at this time. It does not light up at the second detection of same malfunction also in the next driving cycle. It lights up at the third detection of same malfunction also in the third driving cycle.

Pending Diagnostic Trouble Code (DTC)

Pending DTC means a DTC detected and stored temporarily at first or second driving cycle of the DTC which is detected in the 3 driving cycle detection logic.

Data Link Connector (DLC)

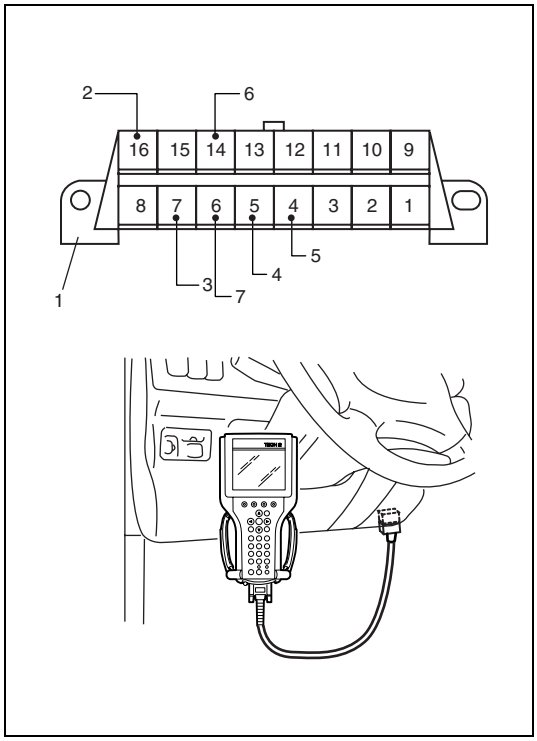

DLC (1) is in compliance with SAE J1962 in its installation position, the shape of connector and pin assignment.

K line (3) of ISO 9141 is used for SUZUKI scan tool to communication with ECM, ABS control module and immobilizer control module.

CAN lines (6) and (7) are used to write program in ECM using SUZUKI scan tool. For details of writing program in ECM, refer to “ECM Registration (Programming)” in Section 6E2.

2. B+
4. ECM ground
5. Body ground

Precaution in Diagnosing Trouble

- Don't disconnect couplers from ECM, battery cable from battery, ECM ground wire harness from engine or main fuse before confirming diagnostic information (DTC) stored in ECM memory.
- Diagnostic information stored in ECM memory can be cleared as well as checked by using SUZUKI scan tool. Before using scan tool, read its Operator's (Instruction) Manual carefully to have good understanding as to what functions are available and how to use it.
- Be sure to read "Precautions for Electrical Circuit Service" in Section 0A before inspection and observe what is written there.
- For the connector number and the terminal number described in fault finding procedure, refer to "Wiring Diagram Manual" described in FOREWORD of this manual.
- Fuel Injector Registration
  If fuel injector is replaced, register fuel injector calibration code into ECM by performing procedure described in "Fuel Injector Registration" under "ECM Registration (Programming)" of Section 6E2.
- Registration for ECM Replacement
  Engine control program is not written in new ECM (i.e., blank ECM) bought from a part supplier.
  Therefore, when using a new ECM, it is necessary to write engine control program in it. For details, refer to "Registration for ECM Replacement" under "ECM Registration (Programming)" in Section 6E2.
- High Pressure Pump Data Initialization
  If high pressure pump is replaced with new one, initialize fuel pressure data in ECM by performing procedure described in "High Pressure Pump Data Initialization" under "ECM Registration (Programming)" of Section 6E2.
- EGR Valve Data Initialization
  If EGR valve is replaced with new one, initialize EGR valve data in ECM by performing procedure described in "EGR Valve Data Initialization" under "ECM Registration (Programming) of Section 6E2.
- ECM substitution
  – The data of immobilizer control system registered with ECM cannot be reprogrammed. Therefore, check for engine control system can not be performed using known-good ECM installed in other normal vehicle.
  – In case that new ECM, on which the data of immobilizer control system is not programmed, is used for inspecting the engine control system, the ECM cannot be used for the other vehicles because the data of immobilizer control system registered with the ECM cannot be reprogrammed.

Malfunction Indicator Lamp (MIL) Check

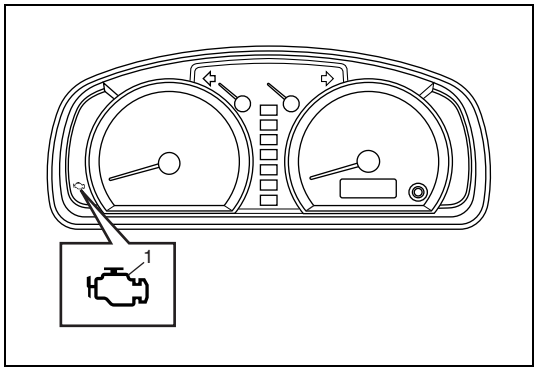

Malfunction indicator lamp (1) signals an antipollution system failure.
Check that it lights up for 3 seconds after the ignition switch is turned on, and then it goes off (automatic test procedure).
If light remains ON after an automatic test procedure, go to “Diagnostic Trouble Code (DTC) Check” in this section.
After the ignition switch is turned on, if light does not light up or remains ON, check that malfunction indicator lamp circuit.

Glow Indicator Light and Injection Warning Light (Gravity 1 Fault) Check

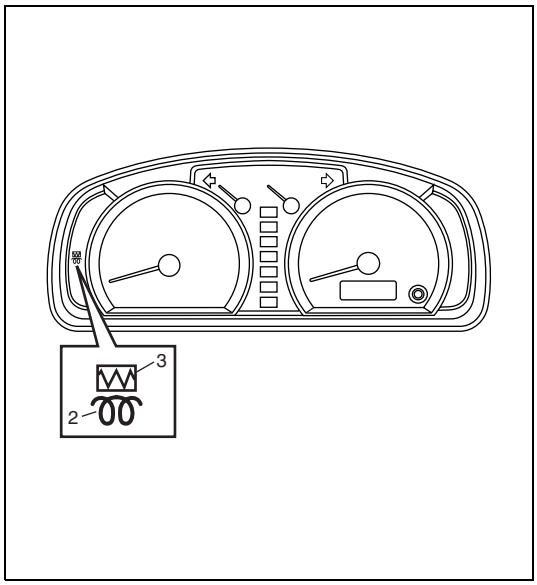

This light serves to indicate that the glow plugs are working and to signal system failures.

- Glow plug indicator light (2):
  Check that it lights while glow plugs are operating.
- Injection warning light (3):
  Check that it lights up for 3 seconds after the ignition switch is turned on, and then it goes off (automatic test procedure).

If lights (glow indicator light and injection warning light) remain ON after end of the preheating period and an automatic test procedure, go to “Diagnostic Trouble Code (DTC) Check” in this section.
After the ignition switch is turned on, if lights (glow indicator light and injection warning light) does not light up or remains ON, check that glow indicator light circuit or injection warning light (gravity 1 fault) circuit.

Red Stop Warning Light (Gravity 2 Fault) Check

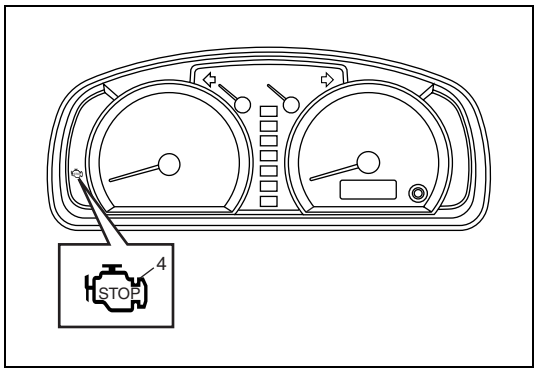

Red stop warning light (4) serves to indicate proper functioning and to signal system failures.
Check that it lights up for 3 seconds after the ignition switch is turned on, and then it goes off (automatic test procedure).
If light remains ON after an automatic test procedure, go to “Diagnostic Trouble Code (DTC) Check” in this section.
After the ignition switch is turned on, if light does not light up or remains ON, check that red stop warning light (gravity 2 fault) circuit.

Engine Diagnostic Flow Table

Numbers of each step correspond to the numbers of the items after this table.
Refer to “Diagnostic Step Details” following this table for the details of each step.

Step	Action	Yes	No
1	Customer Complaint Analysis Perform customer complaint analysis. Was customer complaint analysis performed?	Go to Step 2.	Perform customer complaint analysis.
2	Visual Inspection Perform visual inspection referring to “Visual Inspection” in this section. Is there any faulty condition?	Repair or replace malfunction part and then go to Step 3.	Go to Step 3.
3	Diagnostic Trouble Code Check and Record and clearance Check for DTC referring to “Diagnostic Step Details”. Is there any DTC(s)?	1) Record and clear DTC referring to “Diagnostic Trouble Code (DTC) Clearance” in this section. 2) Go to Step 5.	Go to Step 4.
4	Engine Basic Check and Fault Finding – Customer Complaints Check and repair according to “Engine Basic Check” and “Fault Finding – Customer Complaints” in this section. Is there any faulty condition?	Repair or replace malfunction part and then go to Step 8.	Go to Step 8.
5	Recheck DTC Recheck DTC referring to “Diagnostic Step Details”. Is there any DTC(s)?	Go to Step 6.	Go to Step 7.
6	Troubleshooting for DTC Check and repair according to applicable DTC diagnostic flow table in this section. Is there any faulty condition?	Repair or replace malfunction part and then go to Step 8.	Go to Step 7.
7	Check for intermittent problems Check for intermittent problems referring to “Diagnostic Step Details”. Is there any faulty condition?	Repair or replace malfunction part and then go to Step 8.	Go to Step 8.
8	Final Confirmation Test 1) Clear DTC if any. 2) Perform final confirmation test referring to “Diagnostic Step Details”. 3) Is there any problem symptom, DTC or abnormal condition?	Go to Step 5.	End.

Customer Problem Inspection Form (Example)

User name:	Model:	VIN:	
Date of issue:	Date Reg.	Date of problem:	Mileage:

PROBLEM SYMPTOMS

☐Difficult Starting	**☐Poor Driveability**
☐No cranking ☐No initial combustion ☐Poor starting at (☐Cold/☐Warm/☐Always) ☐Other _____	☐Hesitation on acceleration ☐Back fire/After fire ☐Loss of power ☐Surging ☐Abnormal knocking ☐Other _____
☐Poor Idling	**☐Engine Stall when**
☐Poor fast idle ☐Abnormal idling speed (☐High ☐Low) (r/min.) ☐Unstable ☐Hunting (r/min. to r/min.) ☐Other _____	☐Immediately after start ☐Accel. pedal is depressed ☐Accel. pedal is released ☐Load is applied ☐A/C ☐Electrical load ☐P/S ☐Other _____

☐OTHERS:

VEHICLE/ENVIRONMENTAL CONDITION WHEN PROBLEM OCCURS

Environmental Condition

Weather	☐Fair ☐Cloudy ☐Rain ☐Snow ☐Always ☐Other _____ (°F/ °C)
Temperature	☐Hot ☐Warm ☐Cool ☐Cold ☐Always
Frequency	☐Always ☐Sometimes (times/ day, month) ☐Only once ☐Under certain condition
Road	☐Urban ☐Suburbs ☐Highways ☐Mountainous (☐Uphill ☐Downhill) ☐Paved road ☐Gravel
	☐Other _____

Vehicle Condition

Engine condition	☐Cold ☐Warming up phase ☐Warmed up ☐Always ☐Other at starting ☐Immediately after start/ ☐Racing without load ☐Engine speed (r/min.)
Vehicle condition	☐During driving: ☐Constant speed (km/h, mile/h) ☐Accelerating ☐Decelerating ☐Right hand corner ☐Left hand corner ☐When shifting (Lever position) ☐At stop ☐Other ( )
Malfunction indicator lamp condition	☐Always ON ☐Sometimes ON ☐Always OFF ☐Good condition ☐Flashing
Diagnostic trouble code	First check: ☐No code ☐Malfunction code ( )
	Second check: ☐No code ☐Malfunction code ( )

NOTE:

The above form is standard sample. It should be modified according to conditions characteristic of each market.

Diagnostic step details

1. Customer Complaint Analysis

Record details of the problem (failure, complaint) and how it occurred as described by the customer. For this purpose, use of such an inspection form will facilitate collecting information to the point required for proper analysis and diagnosis.

2. Visual Inspection

As a preliminary step, be sure to perform visual check of the items that support proper function of the engine referring to “Visual Inspection” in this section.

3. Diagnostic Trouble Code (DTC) Check, Record and Clearance

First, check DTC, referring to “Diagnostic Trouble Code (DTC) Check” in this section. If DTC is indicated, record and clear DTC by referring to “Diagnostic Trouble Code (DTC) Clearance” in this section.
Attempt to diagnose a trouble based on DTC in this step only or failure to clear the DTC in this step will lead to incorrect diagnosis, trouble diagnosis of a normal circuit or difficulty in troubleshooting.

4. Engine Basic Check and Fault Finding – Customer Complaints

Perform basic engine check according to the “Engine Basic Check” in this section first. When the end of the flow table has been reached, check the parts of the system suspected as a possible cause referring to “Fault Finding – Customer Complaints” in this section and based on symptoms appearing on the vehicle (symptoms obtained through steps of customer complaint analysis, trouble symptom confirmation and/or basic engine check) and repair or replace faulty parts, if any.

5. Recheck DTC

Refer to “Diagnostic Trouble Code (DTC) Check” in this section for checking procedure.

6. Troubleshooting for DTC (See each DTC Diag. Flow Table)

Based on the DTC indicated in Step 5 and referring to the applicable DTC diag. flow table in this section, locate the cause of the trouble, namely in a sensor, switch, wire harness, connector, actuator, ECM or other part and repair or replace faulty parts.

7. Check for Intermittent Problem

Check parts where an intermittent trouble is easy to occur (e.g., wire harness, connector, etc.), referring to “Intermittent and Poor Connection” in Section 0A and related circuit of DTC recorded in Step 5.

8. Final Confirmation Test

Confirm that the problem symptom has gone and the engine is free from any abnormal conditions. If what has been repaired is related to the DTC, clear the DTC once and then recheck DTC and confirm that no DTC is indicated.

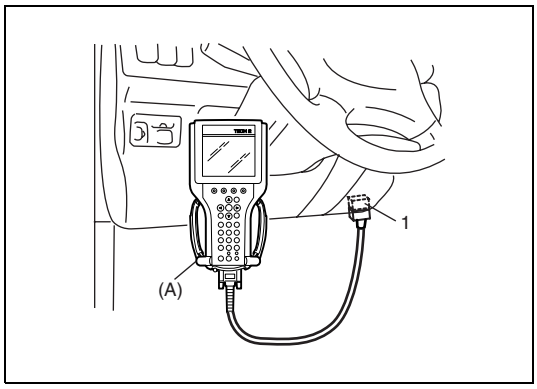

Diagnostic Trouble Code (DTC) Check

1) Prepare SUZUKI scan tool.
2) Connect it to data link connector (DLC) (1) located on underside of instrument panel at driver's seat side.

Special tool
(A): SUZUKI scan tool

3) Turn ignition switch ON.
4) Read DTC according to instructions displayed on scan tool and print them or write them down. Refer to scan tool operator's manual for further details.
   If communication between scan tool and ECM is not possible, check if scan tool is communicable by connecting it to ECM in another vehicle. If communication is possible in this case, scan tool is in good condition. Then check data link connector and serial data line (circuit) in the vehicle with which communication was not possible.
5) After completing the check, turn ignition switch off and disconnect scan tool from data link connector.

Diagnostic Trouble Code (DTC) Clearance

1) Connect SUZUKI scan tool to data link connector in the same manner as when making this connection for Diagnostic Trouble Code (DTC) Check.
2) Turn ignition switch OFF and then ON (but engine at stop).
3) Erase DTC according to instructions displayed on scan tool. Refer to scan tool operator's manual for further details.
4) After completing the clearance, turn ignition switch OFF and disconnect scan tool from data link connector.

Diagnostic Trouble Code (DTC) Table

DTC No. (Generic scan tool)	DTC No. (SUZUKI scan tool)	Detecting Item	Detecting Condition (DTC will set when detecting:)
P0016	P0016	Crankshaft Position – Camshaft Position Correlation	Camshaft position sensor signal is incorrect input
P0045	P0045	Turbo Charger Boost Control Solenoid Circuit/Open	Boost pressure control solenoid circuit is open or short
P0070	P0070	External Air Temperature Sensor Circuit Malfunction	IAT sensor circuit is open or short
–	P0087	Fuel Rail/System Pressure Too Low	Fuel flow is too low or too high
P0089	P0089	Fuel Pressure Regulator Performance Problem	Fuel rail pressure is too low or too high
*P0100	P0100	Mass Air Flow Circuit	MAF sensor signal is low or high input
P0115	P0115	Engine Coolant Temperature Circuit Malfunction	Engine coolant temperature sensor circuit is open or short
–	P0170	Fuel Trim	Learned value of fuel injection amount is not updated for longer than a certain period.
P0180	P0180	Fuel Temperature Sensor Circuit Malfunction	Fuel temperature circuit is open or short
*P0190	P0190	Fuel Rail Pressure Sensor Circuit Malfunction	Fuel pressure signal is low or high input
P0200	P0200	Injector Circuit	Fuel injector circuit voltage is too low or too high
*P0201	P0201	Injector Circuit Malfunction – Cylinder 1	Fuel injector No.1 current is low or high input
*P0202	P0202	Injector Circuit Malfunction – Cylinder 2	Fuel injector No.2 current is low or high input
*P0203	P0203	Injector Circuit Malfunction – Cylinder 3	Fuel injector No.3 current is low or high input
*P0204	P0204	Injector Circuit Malfunction – Cylinder 4	Fuel injector No.4 current is low or high input
*P0225	P0225	Pedal Position Sensor 1 Circuit	Accelerator pedal position sensor 1 signal is low or high input
P0231	P0231	Fuel Pump Secondary Circuit Low	Fuel flow actuator circuit is open or short
P0235	P0235	Turbo Pressure Sensor Circuit Malfunction	Boost pressure signal is low or high input
P0263	P0263	Cylinder 1 Contribution/Balance	Detection of engine speed fluctuation (problem on cylinder No.1)
P0266	P0266	Cylinder 2 Contribution/Balance	Detection of engine speed fluctuation (problem on cylinder No.2)
P0269	P0269	Cylinder 3 Contribution/Balance	Detection of engine speed fluctuation (problem on cylinder No.3)
P0272	P0272	Cylinder 4 Contribution/Balance	Detection of engine speed fluctuation (problem on cylinder No.4)
P0325	P0325	Knock Sensor Circuit Malfunction	Knock sensor signal is low or high input

DTC No. (Generic scan tool)	DTC No. (SUZUKI scan tool)	Detecting Item	Detecting Condition (DTC will set when detecting:)
–	P0335	Crankshaft Position Sensor Circuit Malfunction	Crankshaft position sensor signal is not inputted or incorrect signal is inputted
P0340	P0340	Camshaft Position Sensor Circuit Malfunction	Camshaft position sensor signal is not inputted
P0670	P380	Glow Plug Module Control Circuit	Glow plug control circuit is open or short
P0382	P0382	Glow Plug / Heater Circuit B Malfunction	Pre / post-heating control circuit is open or short
P0400	P0400	Exhaust Gas Recirculation Flow Malfunction	Excessive or insufficient EGR flow
P2413		Exhaust Gas Recirculation System Performance	Poor performance of EGR valve
P0403	P0403	Exhaust Gas Recirculation Control Circuit	EGR valve control circuit is open or short
P0409	P0409	Exhaust Gas Recirculation Sensor Circuit	EGR valve position sensor signal is low or high input
–	P0480	Radiator Cooling Fan Low Speed Control System Malfunction	Radiator low speed cooling fan control circuit is low or high input
–	P0481	Radiator Cooling Fan High Speed Control System Malfunction	Radiator high speed cooling fan control circuit is low or high input
P0487	P0487	Exhaust Gas Recirculation Throttle Position Control Circuit	EGR valve position sensor circuit open or short
–	P0500	Vehicle Speed Sensor Circuit Malfunction	Vehicle speed sensor signal is not input or incorrect signal is input
–	P0513	Incorrect Immobilizer Key	Communication error with immobilizer control module
–	P0530	A/C Pressure Sensor Circuit Malfunction	A/C pressure sensor circuit is open or short
–	P0560	System Voltage	Power supply voltage is low or high input
–	P0571	Brake Switch Circuit	Brake switch signal is not input
–	P0604	Control Module Internal Fail	Engine control module internal faulty (system error)
–	P0606	Control Module Program Error	Engine control module internal faulty (system error)
*P062F	P062F	Control Module EEPROM Failure	Engine control module internal faulty (system error)
–	P0641	Sensor Reference Voltage 1 Circuit/Open	Sensor power source 1 voltage is too low or too high
–	P0645	A/C Relay Control Circuit	A/C relay control circuit is open or short
P0651	P0651	Sensor Reference Voltage 2 Circuit/Open	Sensor power source 2 voltage is too low or too high
*P0685	P0685	Main Relay Control Circuit Malfunction	Main relay control signal is low or high input
–	P1641	Additional Heater Relay Circuit 1	Additional heater relay 1 signal circuit is open or short
–	P1642	Additional Heater Relay Circuit 2	Additional heater relay 2, 3 signal circuit is open or short

DTC No. (Generic scan tool)	DTC No. (SUZUKI scan tool)	Detecting Item	Detecting Condition (DTC will set when detecting:)
P2120	P2120	Pedal Position Sensor 2 Circuit	Accelerator pedal position sensor 2 signal is low or high input
P2226	P2226	Barometric Pressure Circuit	Barometric pressure signal is low or high input
P2263	P2263	Turbo Charger Boost System Performance	Boost pressure is too low or too high

NOTE:

In the case of DTC No. of generic scan tool with * mark, DTC is not displayed on generic scan tool depending on DTC detecting conditions. For details, refer to corresponding "Faulty Finding – Fault Interpretation" in this section.

Indicator lamp operation table

DTC No. (Generic scan tool)	DTC No. (SUZUKI scan tool)	Detecting Item	Malfunction Indicator Lamp (MIL)	Injection Warning Light (Gravity 1 Fault)	Red Stop Warning Light (Gravity 2 Fault)
P0016	P0016	Crankshaft Position – Camshaft Position Correlation	–	–	–
P0045	P0045	Turbo Charger Boost Control Solenoid Circuit/Open	–	1 driving cycle	–
P0070	P0070	External Air Temperature Sensor Circuit Malfunction	3 driving cycles	–	–
–	P0087	Fuel Rail/System Pressure Too Low	–	–	*1 driving cycle
P0089	P0089	Fuel Pressure Regulator Performance Problem	–	–	1 driving cycle
P0100	P0100	Mass Air Flow Circuit	*3 driving cycles	–	–
P0115	P0115	Engine Coolant Temperature Circuit Malfunction	–	1 driving cycle	–
–	P0170	Fuel Trim	–	–	–
P0180	P0180	Fuel Temperature Sensor Circuit Malfunction	–	–	–
P0190	P0190	Fuel Pressure Sensor Circuit Malfunction	–	–	*1 driving cycle
P0200	P0200	Injector Circuit	3 driving cycles	–	1 driving cycle
P0201	P0201	Injector Circuit Malfunction – Cylinder 1	*3 driving cycles	*1 driving cycle	–
P0202	P0202	Injector Circuit Malfunction – Cylinder 2	*3 driving cycles	*1 driving cycle	–
P0203	P0203	Injector Circuit Malfunction – Cylinder 3	*3 driving cycles	*1 driving cycle	–
P0204	P0204	Injector Circuit Malfunction – Cylinder 4	*3 driving cycles	*1 driving cycle	–
P0225	P0225	Pedal Position Sensor 1 Circuit	–	1 driving cycle	–
P0231	P0231	Fuel Pump Secondary Circuit Low	–	–	1 driving cycle
P0235	P0235	Turbo Pressure Sensor Circuit Malfunction	–	*1 driving cycle	–
P0263	P0263	Cylinder 1 Contribution/Balance	–	1 driving cycle	–
P0266	P0266	Cylinder 2 Contribution/Balance	–	1 driving cycle	–
P0269	P0269	Cylinder 3 Contribution/Balance	–	1 driving cycle	–
P0272	P0272	Cylinder 4 Contribution/Balance	–	1 driving cycle	–
P0325	P0325	Knock Sensor Circuit Malfunction	–	1 driving cycle	–

DTC No. (Generic scan tool)	DTC No. (SUZUKI scan tool)	Detecting Item	Malfunction Indicator Lamp (MIL)	Injection Warning Light (Gravity 1 Fault)	Red Stop Warning Light (Gravity 2 Fault)
–	P0335	Crankshaft Position Sensor Circuit Malfunction	–	*1 driving cycle	*1 driving cycle
P0340	P0340	Camshaft Position Sensor Circuit Malfunction	–	–	–
P0670	P0380	Glow Plug Module Control Circuit	–	–	–
P0382	P0382	Glow Plug / Heater Circuit B Malfunction	–	–	–
P0400	P0400	Exhaust Gas Recirculation Flow Malfunction	–	–	–
P2413		Exhaust Gas Recirculation System Performance	3 driving cycles	1 driving cycle	–
P0403	P0403	Exhaust Gas Recirculation Control Circuit	*3 driving cycles	–	–
P0409	P0409	Exhaust Gas Recirculation Sensor Circuit	–	–	–
–	P0480	Radiator Cooling Fan Low Speed Control System Malfunction	–	–	–
–	P0481	Radiator Cooling Fan High Speed Control System Malfunction	–	–	–
P0487	P0487	Exhaust Gas Recirculation Throttle Position Control Circuit	3 driving cycles	–	–
–	P0500	Vehicle Speed Sensor Circuit Malfunction	–	–	–
–	P0513	Incorrect Immobilizer Key	–	–	–
–	P0530	A/C Pressure Sensor Circuit Malfunction	–	–	–
–	P0560	System Voltage	–	1 driving cycle	–
–	P0571	Brake Switch Circuit	–	–	–
–	P0604	Control Module Internal Fail	–	–	1 driving cycle
–	P0606	Control Module Program Error	–	*1 driving cycle	*1 driving cycle
P062F	P062F	Control Module EEPROM Failure	*3 driving cycles	*1 driving cycle	–
–	P0641	Sensor Reference Voltage 1 Circuit/Open	–	–	1 driving cycle
–	P0645	A/C Relay Control Circuit	–	–	–
P0651	P0651	Sensor Reference Voltage 2 Circuit/Open	–	1 driving cycle	–
P0685	P0685	Main Relay Control Circuit Malfunction	–	–	–
–	P1641	Additional Heater Relay Circuit 1	–	–	–

DTC No. (Generic scan tool)	DTC No. (SUZUKI scan tool)	Detecting Item	Malfunction Indicator Lamp (MIL)	Injection Warning Light (Gravity 1 Fault)	Red Stop Warning Light (Gravity 2 Fault)
–	P1642	Additional Heater Relay Circuit 2	–	–	–
P2120	P2120	Pedal Position Sensor 2 Circuit	–	1 driving cycle	–
P2226	P2226	Barometric Pressure Circuit	–	–	–
P2263	P2263	Turbo Charger Boost System Performance	–	*1 driving cycle	–

NOTE:

- **For indicator/warning light operation of items with *, refer to corresponding "Faulty Finding – Fault Interpretation" in this section.**
- **"–" marked in above table indicates that indicator/warning light does not light.**

Visual Inspection

Visually check the following parts and systems.

INSPECTION ITEM	REFERRING SECTION
Engine oil - - - - - level, leakage	Section 0B
Engine coolant - - - - - level, leakage	Section 0B
Fuel - - - - - level, leakage	Section 0B
Air cleaner element - - - - - dirt, clogging	Section 0B
Battery - - - - - fluid level, corrosion of terminal	
Drive belt - - - - - tension, damage	Section 0B
Vacuum hoses of air intake system - - - - - disconnection, looseness, deterioration, bend	
Connectors of electric wire harness - - - disconnection, friction	
Fuses - - - - - burning	
Parts - - - - - installation, bolt - - - - - looseness	
Parts - - - - - deformation	
Other parts that can be checked visually Also add the following items at engine start, if possible.	
Malfunction indicator lamp operation	Check that malfunction indicator lamp circuit.
Glow plug indicator light and injection warning light operation	Check that glow plug indicator light and injection warning light circuit.
Red stop warning light	Check that red stop warning light circuit.
Charge warning lamp operation	Section 6H2
Engine oil pressure warning lamp operation	Section 8
Engine coolant temperature meter operation	Section 8
Fuel level meter operation	Section 8
Abnormal air being inhaled from air intake system	
Exhaust system - - - - - leakage of exhaust gas, noise	
Other parts that can be checked visually	

Engine Basic Check

This check is very important for troubleshooting when ECM has detected no DTC and no abnormality has been found in visual inspection.
Follow the flow table carefully.

Step	Action	Yes	No
1	Check battery voltage. Is it 11 V or more?	Go to Step 2.	Go to “Diagnosis” in Section 6H2.
2	Is engine cranked?	Go to Step 3	Go to “Diagnosis” in Section 6G2.
3	Does engine start?	Go to Step 4.	Go to Step 5.
4	Was the trouble symptom able to be confirmed?	Go to the corresponding item(s) in “Fault Finding-Customer Complaints” in this section.	Go to Step 7 of “Engine Diagnosis Flow Table” in this section.
5	Check immobilizer system referring to “Diagnostic Flow Table” in Section 8G2. Is it in good condition?	Go to the corresponding item(s) in “Fault Finding-Customer Complaints” in this section.	Repair malfunction part.

Fault Finding – Fault Interpretation

DTC P0016 Crankshaft position – camshaft position correlation

NOTE:

Conditions for applying fault finding procedures to stored DTC:
The DTC is detected when the starter motor is operating or the engine is running at idle speed.

Wiring Diagram

For wiring circuit and connector number, refer to “A-4 Engine Control System (DSL Type 5)” in Section 8A.

Troubleshooting

Check the connection and condition of the CMP sensor connector. Repair if necessary.
Check the connection and condition of the ECM “C47” connector. Repair if necessary.
Check for 12 V after ignition feed on “C90-1” terminal of the CMP sensor connector. Check for earth on “C90-3” terminal of the CMP sensor connector. Repair if necessary.
Check the insulation, continuity and the absence of interference resistance on the following connections: • Between “C90-2” terminal of CMP sensor connector and “C47-24” terminal of ECM connector • Between “C90-3” terminal of CMP sensor connector and “C47-34” terminal of ECM connector Repair if necessary.
Check the valve timing referring to “Timing Belt Removal and Installation” in Section 6A2. Repair if necessary. If DTC P0016 is still detected, replace the CMP sensor.
If DTC P0016 is still detected, replace the ECM.

After Repair

Deal with any faults detected by SUZUKI scan tool.
Clear the DTC.
Carry out a road test followed by another check with the SUZUKI scan tool.

DTC P0045 Turbo charger boost control solenoid circuit/open

NOTE:

If DTC P0045 is detected, air flow regulation switched off, EGR valve closed and turbo charger regulation switched off.

Wiring Diagram

For wiring circuit and connector number, refer to “A-4 Engine control system (DSL Type5):” in Section 8A.

Detecting Condition

Status displayed on SUZUKI scan tool	Detecting condition	Indicator/warning light operation
CO 0	Open circuit or short circuit to ground	Injection warning light (gravity 1 fault) lights up
CC 1	Short circuit to 12 V	

Troubleshooting

Check the connection and condition of the boost pressure control solenoid valve connector. Repair if necessary.
Check the connection and condition of the ECM “C47” connector. Repair if necessary.
Check for the 12 V after ignition feed on “C97-2” terminal of the boost pressure control solenoid valve connector.
Check boost pressure control solenoid valve for resistance referring to “Boost Pressure Control Solenoid Valve Inspection” in Section 6E2. Replace the boost pressure control solenoid valve if necessary.
Check for insulation, continuity and absence of interference resistance of the connections: • Between “C97-1” terminal of boost pressure control solenoid valve connector and “C47-3” terminal of ECM connector. Repair If necessary.
If DTC P0045 is still detected, replace the ECM.

After Repair

Deal with any faults detected by SUZUKI scan tool.
Clear the DTC.
Carry out a road test followed by another check with the SUZUKI scan tool.

DTC P0070 External air temperature sensor circuit malfunction

Wiring Diagram

For wiring circuit and connector number, refer to “A-4 Engine Control System (DSL Type 5)” in Section 8A.

Detecting Condition

Status displayed on SUZUKI scan tool	Detecting condition	Indicator/warning light operation
CO 0	Short circuit to ground	MIL lights up
CC 1	Open circuit or short circuit to 12 V	

Troubleshooting

Check the connection and condition of the MAF and IAT sensor connector. Repair if necessary.
Check the connection and condition of the ECM “C47” connector. Repair if necessary.
Check IAT sensor for resistance referring to “MAF and IAT Sensor Inspection” in Section 6E2. Replace MAF and IAT sensor if necessary.
Check the insulation, continuity and absence of interference resistance of the connections: • Between “C98-1” terminal of MAF and IAT sensor connector and “C47-19” terminal of ECM connector • Between “C98-2” terminal of MAF and IAT sensor connector and “C47-38” terminal of ECM connector Repair if necessary.
If DTC P0070 is still detected, replace the ECM.

After Repair

Deal with any faults detected by SUZUKI scan tool.
Clear the DTC.
Carry out a road test followed by another check with the SUZUKI scan tool.

DTC P0087 Fuel rail/system pressure too low

NOTE:

- **This DTC indicated only with SUZUKI scan tool.**
- **Fault finding procedure application conditions for stored DTC:**
  The DTC is detected with the engine running.

Detecting Condition

Status displayed on SUZUKI scan tool	Detecting condition	Indicator/warning light operation
D5	Trim minimum for high fuel	Red stop warning light (gravity 2 fault) light up.
D6	Trim maximum for high fuel	

Troubleshooting

Check the connection and condition of the fuel flow actuator connector. Repair if necessary.
Check the connection and condition of the ECM “C47” connector. Repair if necessary.
Check for the 12 V after ignition feed on “C40-1” terminal of the fuel flow actuator connector. Repair if necessary.
Check the insulation, continuity and absence of interference resistance of the connection: • Between “C47-7” terminal of ECM connector and “C40-2” terminal of fuel flow actuator Repair if necessary.
Check fuel flow actuator for resistance referring to “Fuel Flow Actuator Inspection” in Section 6E2. Replace the fuel flow actuator if necessary.
Check for fuel in the tank. Carry out Test 1: Low Pressure Circuit Check in this section. Repair if necessary.
If the fault persists, carry out “Test 7: High Pressure System Check” in this section.
If DTC P0087 is still detected, replace the ECM.

After Repair

Deal with any faults detected by SUZUKI scan tool.
Clear the DTC.
Carry out a road test followed by another check with the SUZUKI scan tool.

DTC P0089 Fuel pressure regulator performance problem

NOTE:

- **Priority when dealing with a number of DTCs:**
  If DTC P0089 and either one of DTC P0180 or P0190 are present, deal with DTC P180 Fuel Temperature Sensor Circuit Malfunction or DTC P0190 Fuel Pressure Sensor Circuit Malfunction first.
- **Fault finding procedure application conditions for stored DTC:**
  The DTC is detected with the engine running.
- **This DTC may be detected when driving with insufficient fuel in fuel tank. Be sure to bear this in mind during troubleshooting.**

Detecting Condition

Status displayed on SUZUKI scan tool	Detecting condition	Indicator/warning light operation
D1	Parameter at limit minimum	Red stop warning light (gravity 2 fault) light up
D2	Parameter at limit maximum	
D3	Below minimum threshold	
D4	Above maximum threshold	
D5	Trim minimum for high fuel	
D6	Trim maximum for high fuel	
D7	Trim minimum for low fuel	
D8	Trim maximum for low fuel	

Troubleshooting

Check amount of fuel in fuel tank. If fuel in fuel tank is around empty, refill and recheck.
Check the connection and condition of the fuel flow actuator connector. Repair if necessary.
Check the connection and condition of the ECM “C47” connector. Repair if necessary.
Check for the 12 V after ignition feed on “C40-1” terminal of the fuel flow actuator connector. Repair if necessary.
Check the insulation, continuity and absence of interference resistance of the connection: • Between “C47-7” terminal of ECM connector and “C40-2” terminal of fuel flow actuator Repair if necessary.
Check fuel flow actuator for resistance referring to “Fuel Flow Actuator Inspection” in Section 6E2. Replace fuel flow actuator if necessary.
Check for fuel in the tank. Carry out Test 1: Low Pressure Circuit Check in this section.

After Repair

Deal with any faults detected by SUZUKI scan tool.
Clear the DTC.
Carry out a road test followed by another check with the SUZUKI scan tool.

DTC P0100 Mass air flow circuit

Wiring Diagram

For wiring circuit and connector number, refer to “A-4 Engine Control System (DSL Type 5)” in Section 8A.

Detecting Condition

NOTE:

Generic scan tool displays status with * mark only.

Status displayed on SUZUKI scan tool	Detecting condition	Indicator/warning light operation
D1	Parameter at limit minimum	Does not light
D2	Parameter at limit maximum	
*D3	Parameter low level	MIL light up
*D4	Parameter high level	

Troubleshooting

Check the connection and condition of the MAF and IAT sensor connector. Repair if necessary.
Visually check that the turbocharger circuit sealing. Repair if necessary.
Check that the air filter is not blocked. Clean or replace air cleaner filter if necessary.
Check turbo charger referring to “Turbocharger Inspection” in Section 6A2. Replace if necessary.
Check that the air inlet system is not blocked between the air filter outlet and the intake manifold. Repair if necessary.
Check the connection and condition of the ECM “C47” connector. Repair if necessary.
Check for the 5 V after ignition feed on “C98-5” terminal of MAF and IAT sensor connector. Repair if necessary.
Check for insulation, continuity and absence of interference resistance of the connections: • Between “C98-2” terminal of MAF and IAT sensor connector and “C47-38” terminal of ECM connector • Between “C98-6” terminal of MAF and IAT sensor connector and “C47-28” terminal of ECM connector Repair If necessary. If DTC P0100 is still detected, replace the MAF and IAT sensor.

After Repair

Deal with any faults detected by SUZUKI scan tool.
Clear the DTC.
Carry out a road test followed by another check with the SUZUKI scan tool.

DTC P0115 Engine coolant temperature circuit malfunction

NOTE:

- **If DTC P0115 is detected, radiator cooling fan motor is operated.**
- **The preheating time is 10 seconds or longer.**

Wiring Diagram

For wiring circuit and connector number, refer to “A-4 Engine Control System (DSL Type 5)” in Section 8A.

Detecting Condition

Status displayed on SUZUKI scan tool	Detecting condition	Indicator/warning light operation
CC0	Short circuit to ground	Injection warning light (gravity 1 fault) light up.
CO1	Open circuit or short circuit to 12 V	

Troubleshooting

Check the connection and condition of the coolant temperature sensor connector. Repair it if necessary.
Check the connection and condition of the ECM “C47” connector. Repair if necessary.
Check ECT sensor for resistance referring to “Engine Coolant Temperature Sensor (ECT sensor) Inspection” in Section 6E2.
Check the insulation, continuity and absence of interference resistance of the connections: • Between “BLU/WHT” wire of engine coolant temperature sensor connector and “C47-31” terminal of ECM connector • Between “BLU/RED” wire of engine coolant temperature sensor connector and “C47-21” terminal of ECM connector Repair if necessary.
If DTC P0115 is still detected, replace the ECM.

After Repair

Deal with any faults detected by SUZUKI scan tool.
Clear the DTC.
Carry out a road test followed by another check with the SUZUKI scan tool.

DTC P0170 Fuel trim

NOTE:

- **This DTC indicated only with SUZUKI scan tool.**
- **Priority when dealing with a number DTCs:**
  If DTC P0170 and either one of DTC P0089, P0200, P0201, P0202, P0203 or P0204 are detected, deal with DTC "P0089 Fuel pressure regulator performance problem", "P0200 Injector control circuit", "P0201 Cylinder 1 injector control circuit, P0202 Cylinder 2 injector control circuit", "P0203 Cylinder 3 injector control circuit" or "P0204 Cylinder 4 injector control circuit" first.

Wiring Diagram

For wiring circuit and connector number, refer to "A-4 Engine control system (DSL Type5):" in Section 8A.

Driving cycle for troubleshooting

Before starting troubleshooting, carry out the following driving cycle.

Perform the following: (idle) • Engine running at idle speed for 30 seconds • Engine speed < 1000 rpm • Injected quantity < 10 mg/stroke • Rail pressure: between 270 bar and 300 bar • Vehicle speed < 3 km/h • Engine coolant temperature > 79 °C • Intake air temperature: between 10 °C and 50 °C • Fuel temperature: between 10 °C and 57 °C • Battery voltage: between 10 V and 16 V • Barometric pressure > 90kPa
Perform the following: (Running) • Engine running at idle speed for 30 seconds • Engine speed: between 1250 rpm and 3500 rpm • Injected quantity: betwee15 mg/stroke and 30 mg/stroke • Rail pressure: between 350 bar and 1450 bar • Vehicle speed: no limit • Engine coolant temperature > 65 °C • Intake air temperature: between 0 °C and 150 °C • Fuel temperature: between –50 °C and 150 °C • Battery voltage: between 10 V and 16 V • Barometric pressure > 80kPa If DTC P0170 is still detected, go to trouble shooting.

Troubleshooting

Check that the fuel injector calibration codes are correctly entered on the ECM. Check the connection and condition of the ECM "C47" connector and "C47-9" terminal of knock sensor shielding. Check that the knock sensor is secured on the engine. After retightening the knock sensor, initialize the fuel pressure value by using "Initialize High Pressure Pump" under "Miscellaneous test" ("MISC TEST") of SUZUKI scan tool.

After Repair

Deal with any faults detected by SUZUKI scan tool.
Clear the DTC.
Carry out a road test followed by another check with the SUZUKI scan tool.

DTC P0180 Fuel temperature sensor circuit malfunction

Wiring Diagram

For wiring circuit and connector number, refer to “A-4 Engine control system (DSL Type5):” in Section 8A.

Detecting Condition

Status displayed on SUZUKI scan tool	Detecting condition	Indicator/warning light operation
CO0	Short circuit to ground	Does not light
CC1	Open circuit or short circuit to 12 V	

Troubleshooting

Check the connection and condition of the fuel temperature sensor connector. Repair if necessary.
Check the connection and condition of the ECM “C47” connector. Repair if necessary.
Check fuel temperature sensor for resistance referring to “Fuel Temperature Sensor Inspection” in Section 6E2.
Check the insulation, continuity and absence of interference resistance of the connections: • Between “C41-2” terminal of fuel temperature sensor connector and “C47-22” terminal of ECM connector • Between “C41-1” terminal of fuel temperature sensor connector and “C47-32” terminal of ECM connector Repair if necessary.
If DTC P0180 is still detected, replace the ECM.

After Repair

Deal with any faults detected by SUZUKI scan tool.
Clear the DTC.
Carry out a road test followed by another check with the SUZUKI scan tool.

DTC P0190 Fuel pressure sensor circuit malfunction

NOTE:

- **Priority when dealing with a number of faults:**
  If DTC P0190 and DTC P0641 are detected, deal with DTC P0641 Sensor Reference Voltage 1 Circuit/ Open first.
- **Fault finding procedure application conditions for stored DTC:**
  The DTC is detected after the engine started.
- **If DTC P0190 is detected, the engine stops and impossible to restart.**

Detecting Condition

NOTE:

Generic scan tool displays status with * mark only.

Status displayed on SUZUKI scan tool	Detecting condition	Indicator/warning light operation
*CC0	Short circuit to ground	Red stop warning light (gravity 2 fault) light up
*CO1	Open circuit or short circuit to 12 V	
*D1	Inconsistency	Does not light
*D2	Above maximum threshold	Red stop warning light (gravity 2 fault) light up
*D3	Below minimum threshold	
D4	Value out of range	Does not light

Troubleshooting

Check the connection and condition of the connector of the fuel pressure sensor. Repair if necessary.
Check the connection and condition of ECM “C47” connector. Repair if necessary.
Check for 5 V on “C91-1” terminal of the fuel pressure sensor connector. Check for earth on “C91-2” terminal of the fuel pressure sensor connector. Repair if necessary.
Check for insulation, continuity and absence of interference resistance of the connections: • Between “ORN” wire of fuel pressure sensor connector and “C47-15” terminal of ECM connector • Between “RED/BLK” wire of fuel pressure sensor connector and “C47-25” terminal of ECM connector • Between “BLK” wire of fuel pressure sensor connector and “C47-35” terminal of ECM connector Repair if necessary. If DTC P0190 is still detected, replace the rail.
If DTC P0190 is still detected, replace the ECM.

After Repair

Deal with any faults detected by SUZUKI scan tool.
Clear the DTC.
Carry out a road test followed by another check with the SUZUKI scan tool.

DTC P0200 Injector circuit

NOTE:

- **Conditions for applying the fault finding procedure to the DTC stored:**
  The DTC is detected when engine is running at idle speed.
- **Priority when dealing with a number of DTCs:**
  If DTC P0200 and either one of DTC P0201, DTC P0202, DTC P0203 or DTC P0204 are detected, the fault finding procedure remains the same, but the faulty injector has to be identified.
- **If DTC P0200 is detected, engine noise, unstable engine speed and reduced engine performance.**

Wiring Diagram

For wiring circuit and connector number, refer to “A-4 Engine control system (DSL Type5):” in Section 8A.

Detecting Condition

Status displayed on SUZUKI scan tool	Detecting condition	Indicator/warning light operation
CC1	Short circuit to 12 V	MIL and red stop warning light (gravity 2 fault) light up
CC0	Short circuit to ground	

Troubleshooting

Switch off the ignition and check the connection and condition of the injector connectors. Repair if necessary.
Switch off the ignition, disconnect the injectors (or the injector identified by DTC P0201, DTC P0202, DTC P0203 or DTC P0204) and switch the ignition back on. Check DTC. If DTC P0200 is detected, carry out troubleshooting for detected DTC P0200. If DTC P0200 is not detected, carry out troubleshooting for not detected DTC P0200.

Troubleshooting for detected DTC P0200

The injectors are not faulty. Check the condition and connection of the ECM “C47” connector. Repair if necessary. Check for insulation, continuity and absence of interference resistance of the connections: • Between “C47-48” terminal of ECM connector and “C36-1” terminal of injector No.1 connector • Between “C47-47” terminal of ECM connector and “C36-2” terminal of injector No.1 connector • Between “C47-42” terminal of ECM connector and “C37-1” terminal of injector No.2 connector • Between “C47-41” terminal of ECM connector and “C37-2” terminal of injector No.2 connector • Between “C47-46” terminal of ECM connector and “C38-1” terminal of injector No.3 connector • Between “C47-45” terminal of ECM connector and “C38-2” terminal of injector No.3 connector • Between “C47-44” terminal of ECM connector and “C39-1” terminal of injector No.4 connector • Between “C47-43” terminal of ECM connector and “C39-2” terminal of injector No.4 connector Repair if necessary.
If DTC P0200 is still detected, replace the ECM.

Troubleshooting for not detected DTC P0200

Injector(s) fault.
Replace the injector, identified by DTC P0201 to DTC P0204 if detected.
If none of the faults identifying the faulty injector circuit are detected.
- Switch off the ignition
- Reconnect one of the four injectors
- Switch on the ignition again

If DTC is detected, replace the reconnected injector.
Carry out the same procedure for the remaining injectors.

After Repair

Deal with any faults detected by SUZUKI scan tool.
Clear the DTC.
Carry out a road test followed by another check with the SUZUKI scan tool.

DTC P0201 Injector circuit malfunction – cylinder 1

NOTE:

- **Cylinder number is counted from flywheel side.**
- **Fault finding procedure application conditions for stored DTC:**
  The DTC is detected when engine is running at idle speed.
- **When DTC P0201 occurs, the idle speed is locked at 1000 rpm, there is engine noise, the engine speed is unstable, and engine performance is reduced to 75%.**

Wiring Diagram

For wiring circuit and connector number, refer to “A-4 Engine control system (DSL Type5):” in Section 8A.

Detecting Condition

NOTE:

Generic scan tool displays status with *mark only.

Status displayed on SUZUKI scan tool	Detecting condition	Indicator/warning light operation
*CO	Open circuit	MIL and injection warning light (gravity 1 fault) light up
*CC	Short circuit	
D1	Parameter at limit minimum	Injection warning light (gravity 1 fault) light up
D2	Parameter at limit maximum	

Troubleshooting for CO: Open circuit, CC: Short circuit

Switch off the ignition and wait 15 seconds. Check the connection and condition of the injector connector. Repair if necessary.	
Check the connection and condition of the ECM “C47” connector. Repair if necessary.	
Using SUZUKI scan tool, carry out the “Cylinder 1 Injector” (in output test on scan tool). If injector 1 cannot be heard operating five times in a cycle, connect the wire of the injector of cylinder 2 to the injector of cylinder 1 and carry out the “Cylinder 2 Injector” (in output test on scan tool). Does this injector actuation cycle work?	
Yes	Injector 1 is not defective; the fault is in the injector 1 control circuit.
	Check for continuity and absence of interference resistance of the connections: • Between “C47-48” terminal of ECM connector and “C36-1” terminal of injector No.1 connector • Between “C47-47” terminal of ECM connector and “C36-2” terminal of injector No.1 connector Repair if necessary.
	If DTC P0201 is still detected, replace the ECM.
No	Injector 1 is faulty, replace the cylinder 1 injector.

Troubleshooting for D1: At minimum stop, D2: At maximum stop

Check that the injector calibration codes are registered correctly in the ECM.
Check the connection and condition of the “C47-9” terminal of ECM connector. Repair if necessary.
Check that the knock sensor is secured on the engine. Repair if necessary.
After retightening the knock sensor, initialize the fuel pressure value by using “Initialize High Pressure Pump” under “Miscellaneous test” (“MISC TEST”) of SUZUKI scan tool.
If DTC P0201 is still detected, replace the cylinder 1 injector.

After Repair

Deal with any faults detected by SUZUKI scan tool.
Clear the DTC.
Carry out a road test followed by another check with the SUZUKI scan tool.

DTC P0202 Injector circuit malfunction – cylinder 2

NOTE:

- **Cylinder number is counted from flywheel side.**
- **Fault finding procedure application conditions for stored DTC:**
  The DTC is detected when engine is running at idle speed.
- **When DTC P0202 occurs, the idle speed is locked at 1000 rpm, there is engine noise, the engine speed is unstable, and engine performance is reduced to 75%.**

Wiring Diagram

For wiring circuit and connector number, refer to “A-4 Engine control system (DSL Type5):” in Section 8A.

Detecting Condition

NOTE:

Generic scan tool displays status with *mark only.

Status displayed on SUZUKI scan tool	Detecting condition	Indicator/warning light operation
*CO	Open circuit	MIL and injection warning light (gravity 1 fault) light up
*CC	Short circuit	
D1	Parameter at limit minimum	Injection warning light (gravity 1 fault) light up
D2	Parameter at limit maximum	

Troubleshooting for CO: Open circuit, CC: Short circuit

Switch off the ignition and wait 15 seconds.Check the connection and condition of the injector connector. Repair if necessary.	
Check the connection and condition of the ECM “C47” connector. Repair if necessary.	
Using SUZUKI scan tool, carry out the “Cylinder 2 Injector” (in output test on scan tool). If injector 2 cannot be heard operating five times in a cycle, connect the wire of the injector of cylinder 3 to the injector of cylinder 2 and carry out the “Cylinder 3 Injector” (in output test on scan tool). Does this injector actuation cycle work?	
Yes	Injector 2 is not defective; the fault is in the injector 1 control circuit.
	Check for continuity and absence of interference resistance of the connections: • Between “C47-42” terminal of ECM connector and “C37-1” terminal of injector No.2 connector • Between “C47-41” terminal of ECM connector and “C37-2” terminal of injector No.2 connector Repair if necessary.
	If DTC P0202 is still detected, replace the ECM.
No	Injector 2 is faulty, replace the cylinder 2 injector.

Troubleshooting for D1: At minimum stop, D2: At maximum stop

Check that the injector calibration codes are registered correctly in the ECM.
Check the connection and condition of the “C47-9” terminal of ECM connector. Repair if necessary.
Check that the knock sensor is secured on the engine. Repair if necessary.
After retightening the knock sensor, initialize the fuel pressure value by using “Initialize High Pressure Pump” under “Miscellaneous test” (“MISC TEST”) of SUZUKI scan tool.
If DTC P0202 is still detected, replace the cylinder 2 injector.

After Repair

Deal with any faults detected by SUZUKI scan tool.
Clear the DTC.
Carry out a road test followed by another check with the SUZUKI scan tool.

DTC P0203 Injector circuit malfunction – cylinder 3

NOTE:

- **Cylinder number is counted from flywheel side.**
- **Fault finding procedure application conditions for stored DTC:**
  The DTC is detected when engine is running at idle speed.
- **When DTC P0203 occurs, the idle speed is locked at 1000 rpm, there is engine noise, the engine speed is unstable, and engine performance is reduced to 75%.**

Wiring Diagram

For wiring circuit and connector number, refer to “A-4 Engine control system (DSL Type5):” in Section 8A.

Detecting Condition

NOTE:

Generic scan tool displays status with *mark only.

Status displayed on SUZUKI scan tool	Detecting condition	Indicator/warning light operation
*CO	Open circuit	MIL and injection warning light (gravity 1 fault) light up
*CC	Short circuit	
D1	Parameter at limit minimum	Injection warning light (gravity 1 fault) light up
D2	Parameter at limit maximum	

Troubleshooting

Switch off the ignition and wait 15 seconds. Check the connection and condition of the injector connector. Repair if necessary.	
Check the connection and condition of the ECM “C47” connector. Repair if necessary.	
Using SUZUKI scan tool, carry out the “Cylinder 3 Injector” (in output test on scan tool). If injector 3 cannot be heard operating five times in a cycle, connect the wire of the injector of cylinder 4 to the injector of cylinder 3 and carry out the “Cylinder 4 Injector” (in output test on scan tool). Does this injector actuation cycle work?	
Yes	Injector 3 is not defective; the fault is in the injector 3 control circuit.
	Check for continuity and absence of interference resistance of the connections: • Between “C47-46” terminal of ECM connector and “C38-1” terminal of injector No.3 connector • Between “C47-45” terminal of ECM connector and “C38-2” terminal of injector No.3 connector Repair if necessary.
	If DTC P0203 is still detected, replace the ECM.
No	Injector 3 is faulty, replace the cylinder 3 injector.

Troubleshooting for D1: At minimum stop, D2: At maximum stop

Check that the injector calibration codes are registered correctly in the ECM.
Check the connection and condition of the “C47-9” terminal of ECM connector. Repair if necessary.
Check that the knock sensor is secured on the engine. Repair if necessary.
After retightening the knock sensor, initialize the fuel pressure value by using “Initialize High Pressure Pump” under “Miscellaneous test” (“MISC TEST”) of SUZUKI scan tool.
If DTC P0202 is still detected, replace the cylinder 2 injector.

After Repair

Deal with any faults detected by SUZUKI scan tool.
Clear the DTC.
Carry out a road test followed by another check with the SUZUKI scan tool.

DTC P0204 Injector circuit malfunction – cylinder 4

NOTE:

- **Cylinder number is counted from flywheel side.**
- **Fault finding procedure application conditions for stored DTC:**
  The DTC is detected when engine is running at idle speed.
- **When DTC P0204 occurs, the idle speed is locked at 1000 rpm, there is engine noise, the engine speed is unstable, and engine performance is reduced to 75%.**

Wiring Diagram

For wiring circuit and connector number, refer to “A-4 Engine control system (DSL Type5):” in Section 8A.

Detecting Condition

NOTE:

Generic scan tool displays status with *mark only.

Status displayed on SUZUKI scan tool	Detecting condition	Indicator/warning light operation
*CO	Open circuit	MIL and injection warning light (gravity 1 fault) light up
*CC	Short circuit	
D1	Parameter at limit minimum	Injection warning light (gravity 1 fault) light up
D2	Parameter at limit maximum	

Troubleshooting for CO: Open circuit, CC: Short circuit

Switch off the ignition and wait 15 seconds. Check the connection and condition of the injector connector. Repair if necessary.	
Check the connection and condition of the ECM “C47” connector. Repair if necessary.	
Using SUZUKI scan tool, carry out the “Cylinder 4 Injector” (in output test on scan tool). If injector 4 cannot be heard operating five times in a cycle, connect the wire of the injector of cylinder 3 to the injector of cylinder 4 and carry out the “Cylinder 3 Injector” (in output test on scan tool). Does this injector actuation cycle work?	
Yes	Injector 4 is not defective; the fault is in the injector 4 control circuit.
	Check for continuity and absence of interference resistance of the connections: • Between “C47-44” terminal of ECM connector and “C39-1” terminal of injector No.4 connector • Between “C47-43” terminal of ECM connector and “C39-2” terminal of injector No.4 connector Repair if necessary.
	If DTC P0204 is still detected, replace the ECM.
No	Injector 4 is faulty, replace the cylinder 4 injector.

Troubleshooting for D1: At minimum stop, D2: At maximum stop

Check that the injector calibration codes are registered correctly in the ECM.
Check the connection and condition of the “C47-9” terminal of ECM connector. Repair if necessary.
Check that the knock sensor is secured on the engine. Repair if necessary.
After retightening the knock sensor, initialize the fuel pressure value by using “Initialize High Pressure Pump” under “Miscellaneous test” (“MISC TEST”) of SUZUKI scan tool.
If DTC P0204 is still detected, replace the cylinder 4 injector.

After Repair

Deal with any faults detected by SUZUKI scan tool.
Clear the DTC.
Carry out a road test followed by another check with the SUZUKI scan tool.

DTC P0225 Pedal position sensor 1 circuit

NOTE:

- **Priority when dealing with a number of DTCs:**
- **If DTC P0225 and DTC P0641 are detected, deal with DTC P0641 Sensor Reference Voltage 1 first.**
- **If DTC P0225 is detected, engine speed maintained above 1000 rpm and engine performance reduced to 75%.**
- **If DTC P0225 and DTC P2120 are detected, engine speed fixed at 1300 rpm.**

Wiring Diagram

For wiring circuit and connector number, refer to “A-4 Engine control system (DSL Type5):” in Section 8A.

Detecting Condition

NOTE:

Generic scan tool displays status with *mark only.

Status displayed on SUZUKI scan tool	Detecting condition	Indicator/warning light operation
*D1	Incoherence	Injection warning light (gravity 1 fault) light up
*D2	No signal	
D3	Component stuck	
*CO0	Open circuit or short circuit to ground	
*CC1	Short circuit to 12 V	

Troubleshooting for D1: Incoherence, D3: Component stuck

Disconnect the ECM “E17” connector and the APP sensor connector. Check for insulation between “E17-3” terminal and “E17-21” terminal of ECM connector Repair if necessary. If DTC P0225 is still detected, replace the APP sensor.
If DTC P0225 is still detected, replace the ECM.

Troubleshooting for CO0: Open circuit or short circuit to ground, CC1: Short circuit to +12 V or D2: No signal

Check the connection and condition of the APP sensor connector. Repair if necessary.
Check the connection and condition of the ECM “E17” connector. Repair if necessary.
Check APP sensor for resistance referring to “APP Sensor Inspection” in Section 6E2. Replace the APP sensor necessary.
Check for 5 V on “E97-4” terminal of APP sensor connector. Check for earth on “E97-5” terminal of APP sensor connector. Repair if necessary.
Check for insulation, continuity and absence of interference resistance of the connections: • Between “E97-3” terminal of APP sensor connector and “E17-4” terminal of ECM connector • Between “E97-4” terminal of APP sensor connector and “E17-3” terminal of ECM connector • Between “E97-5” terminal of APP sensor connector and “E17-5” terminal of ECM connector Repair if necessary.

Disconnect the ECM “E17” connector and the APP sensor connector. Check for insulation between “E17-3” terminal and “E17-21” terminal of ECM connector Repair if necessary. If DTC P0225 is still detected, replace the APP sensor.
If DTC P0225 is still detected, replace the ECM.

After Repair

Deal with any faults detected by SUZUKI scan tool.
Clear the DTC.
Carry out a road test followed by another check with the SUZUKI scan tool.

DTC P0231 Fuel pump secondary circuit low

NOTE:

If DTC P0231 is detected, the fuel flow actuator is fully opened (leading to engine rattling) and the engine is stopped to prevent it from racing.

Wiring Diagram

For wiring circuit and connector number, refer to “A-4 Engine control system (DSL Type5):” in Section 8A.

Detecting Condition

NOTE:

Generic scan tool displays status with *mark only.

Status displayed on SUZUKI scan tool	Detecting condition	Indicator/warning light operation
CO0	Open circuit or short circuit to ground	Red stop warning light (gravity 2 fault) light up
CC1	Short circuit to 12 V	

Troubleshooting

Check the condition and connection of the flow actuator connector. Repair if necessary.
Check for the 12 V after ignition feed on “C40-1” terminal of the flow actuator connector.
Check the connection and condition of the ECM “C47” connector. Repair if necessary.
Check fuel flow actuator for resistance referring to “Fuel Flow Actuator Inspection” in Section 6E2. Replace fuel flow actuator if necessary.
Check for insulation, continuity and absence of interference resistance of the connection: • Between “C47-7” terminal of ECM connector and “C40-2” terminal of flow actuator connector Repair if necessary.
If DTC P0231 is still detected, replace the ECM.

After Repair

Deal with any faults detected by SUZUKI scan tool.
Clear the DTC.
Carry out a road test followed by another check with the SUZUKI scan tool.

DTC P0235 Turbo pressure sensor circuit malfunction

NOTE:

- **If DTC P0235 and DTC P0641 are detected, deal with DTC P0641 Sensor Reference Voltage 1 first.**

Wiring Diagram

For wiring circuit and connector number, refer to “A-4 Engine control system (DSL Type5):” in Section 8A.

Detecting Condition

Status displayed on SUZUKI scan tool	Detecting condition	Indicator/warning light operation
D1	Parameter at limit minimum	Does not light
D2	Parameter at limit maximum	
D3	Below minimum threshold	Injection warning light (gravity 1 fault) light up
D4	Above maximum threshold	
D5	Trim minimum for high fuel	
D6	Trim maximum for high fuel	
D7	Trim minimum for low fuel	

Troubleshooting for D1: Parameter at limit minimum, D2: Parameter at limit maximum, D3: Below minimum threshold and D4: Above maximum threshold

Check the connection and condition of the boost pressure sensor connector. Repair if necessary.
Check the connection and condition of the ECM “C47” connector. Repair if necessary.
Check for the 5 V after ignition feed on “C47-16” terminal of boost pressure sensor connector. Repair if necessary.
Check for ground on “C47-36” terminal of the boost pressure sensor.
Check for insulation, continuity and absence of interference resistance of the connections: • Between “C49-1” terminal of the boost pressure sensor connector and “C47-16 terminal of ECM connector • Between “C49-3” terminal of the boost pressure sensor connector and “C47-26 terminal of ECM connector • Between “C49-2” terminal of the boost pressure sensor connector and “C47-36 terminal of ECM connector Repair if necessary. If DTC P0235 is still detected, replace the boost pressure sensor.
If DTC P0235 is still detected, replace the ECM.

Troubleshooting for D5: Trim minimum for high fuel, D6: Trim maximum for high fuel and D7: Trim minimum for low fuel

Visually check that the turbocharger circuit sealing. Repair if necessary.
Remove the air supply ducts and check that they are not blocked. Repair if necessary.
Check the condition of the boost pressure sensor connector and replace it if necessary.
With engine stationary, check the consistency between the barometric pressure and boost pressure. With the engine stopped, the pressure should be approximately the same between the two sensors. If the values are very different, replace the boost pressure sensor.
Check the turbocharger (wastegate pneumatic actuation circuit). Repair if necessary.

After Repair

Deal with any faults detected by SUZUKI scan tool.
Clear the DTC.
Carry out a road test followed by another check with the SUZUKI scan tool.

DTC P0263 Cylinder 1 contribution/balance

NOTE:

- **Cylinder number is counted from flywheel side.**
- **Fault finding procedure application conditions for stored DTC:**
  The DTC is detected when engine is running at idle speed.
- **Priority when dealing with a number of DTCs:**
  - **If DTC P0201 (CO: open circuit or CC: short circuit) and DTC P0263 are detected, deal with DTC P0201 Injector Circuit Malfunction – Cylinder 1 first.**
  - **If DTC P0089 (D1: Parameter at limit minimum, D2: Parameter at limit maximum or D7: Trim minimum for low fuel) and DTC P0263 are detected, deal with DTC P0089 Fuel Pressure Regulator Performance Problem first.**
- **If DTC P0263 is detected, engine performance reduced to 75% and injection warning light (gravity 1 fault) light up.**

Troubleshooting

Check the engine compression. Repair if necessary
Check the valve clearances and adjust them if necessary.
Check the air intake circuit and the EGR valve and clean them if necessary.
Replace the injector. If DTC P0263 is still detected, replace the ECM.

After Repair

Deal with any faults detected by SUZUKI scan tool.
Clear the DTC.
Carry out a road test followed by another check with the SUZUKI scan tool.

DTC P0266 Cylinder 2 contribution/balance

NOTE:

- **Cylinder number is counted from flywheel side.**
- **Fault finding procedure application conditions for stored DTC:**
  The TDC is detected when engine is running at idle speed.
- **Priority when dealing with a number of DTCs:**
  - **If DTC P0202 (CO: open circuit or CC: short circuit) and DTC P0266 are detected, deal with DTC P0202 Injector Circuit Malfunction – Cylinder 2 first.**
  - **If DTC P0089 (D1: Parameter at limit minimum, D2: Parameter at limit maximum or D7: Trim minimum for low fuel) and DTC P0266 are detected, deal with DTC P0089 Fuel Pressure Regulator Performance Problem first.**
- **If DTC P0266 is detected, engine performance reduced to 75% and injection warning light (gravity 1 fault) light up**

Troubleshooting

Check the engine compression. Repair if necessary
Check the valve clearances and adjust them if necessary.
Check the air intake circuit and the EGR valve and clean them if necessary.
Replace the injector. If DTC P0266 is still detected, replace the ECM.

After Repair

Deal with any faults detected by SUZUKI scan tool.
Clear the DTC.
Carry out a road test followed by another check with the SUZUKI scan tool.

DTC P0269 Cylinder 3 contribution/balance

NOTE:

- **Cylinder number is counted from flywheel side.**
- **Fault finding procedure application conditions for stored DTC:**
  The DTC is detected when engine is running at idle speed.
- **Priority when dealing with a number of DTCs:**
  - **If DTC P0203 (CO: open circuit or CC: short circuit) and DTC P0269 are detected, deal with DTC P0203 Injector Circuit Malfunction – Cylinder 3 first.**
  - **If DTC P0089 (D1: Parameter at limit minimum, D2: Parameter at limit maximum or D7: Trim minimum for low fuel) and DTC P0269 are detected, deal with DTC P0089 Fuel Pressure Regulator Performance Problem first.**
- **If DTC P0269 is detected, engine performance reduced to 75% and injection warning light (gravity 1 fault) light up.**

Troubleshooting

Check the engine compression. Repair if necessary
Check the valve clearances and adjust them if necessary.
Check the air intake circuit and the EGR valve and clean them if necessary.
Replace the injector. If DTC P0269 is still detected, replace the ECM.

After Repair

Deal with any faults detected by SUZUKI scan tool.
Clear the DTC.
Carry out a road test followed by another check with the SUZUKI scan tool.

DTC P0272 Cylinder 4 contribution/balance

NOTE:

- **Cylinder number is counted from flywheel side.**
- **Fault finding procedure application conditions for stored DTC:**
  The DTC is detected when engine is running at idle speed.
- **Priority when dealing with a number of DTCs:**
  - **If DTC P0204 (CO: open circuit or CC: short circuit) and DTC P0272 are detected, deal with DTC P0204 Injector Circuit Malfunction – Cylinder 4 first.**
  - **If DTC P0089 (D1: Parameter at limit minimum, D2: Parameter at limit maximum or D7: Trim minimum for low fuel) and DTC P0272 are detected, deal with DTC P0089 Fuel Pressure Regulator Performance Problem first.**
- **If DTC P0272 is detected, engine performance reduced to 75% and injection warning light (gravity 1 fault) light up.**

Troubleshooting

Check the engine compression. Repair if necessary
Check the valve clearances and adjust them if necessary.
Check the air intake circuit and the EGR valve and clean them if necessary.
Replace the injector. If DTC P0272 is still detected, replace the ECM.

After Repair

Deal with any faults detected by SUZUKI scan tool.
Clear the DTC.
Carry out a road test followed by another check with the SUZUKI scan tool.

DTC P0325 Knock sensor circuit malfunction

NOTE:

- **Fault finding procedure application conditions for stored DTC:**
  The DTC is detected when engine is running at idle speed.

Detecting Condition

Status displayed on SUZUKI scan tool	Detecting condition	Indicator/warning light operation
D2	No signal	Injection warning light (gravity 1 fault) light up.

Troubleshooting

Check the connection and condition of the knock sensor connector. Repair if necessary.
Check the connection and condition of the ECM “C47” connector and the sensor shielding on “C47-9”. Repair if necessary.
Check for insulation, continuity and absence of interference resistance of the connections: • Between “C12-1” wire of knock sensor connector and “C47-13” terminal of ECM connector • Between “C12-2” wire of knock sensor connector and “C47-12” terminal of ECM connector Repair if necessary.
Check that the fuel injector calibration codes are correctly entered on the ECM. Check that the knock sensor is secure on the engine. Retightening the knock sensor. Clear DTC. Carry out a road test followed by another check with the SUZUKI scan tool. If the fault persists, replace the knock sensor.

After Repair

Deal with any faults detected by SUZUKI scan tool.
Clear the DTC.
Carry out a road test followed by another check with the SUZUKI scan tool.

DTC P0335 Crankshaft position sensor circuit malfunction

NOTE:

- **Fault finding procedu application conditions for stored DTC:**
  The DTC is detected when engine is running at idle speed.
- **This DTC indicated only with SUZUKI scan tool.**
- **If DTC P0335 (D1: incoherency D2: no signal, D3: too many extra teeth or D6: too many missing teeth) is detected, the engine will stop.**
- **If DTC P0335 (D4: missing teeth or D5: extra teeth) 75% engine performance.**

Wiring Diagram

For wiring circuit and connector number, refer to “A-4 Engine control system (DSL Type5):” in Section 8A.

Detecting Condition

Status displayed on SUZUKI scan tool	Detecting condition	Indicator/warning light operation
D1	Incoherency	Red stop warning light (gravity 2 fault) light up
D2	No signal	
D3	Too many extra teeth	
D4	Missing teeth	Injection warning light (gravity 1 fault) light up
D5	Extra teeth	
D6	Too many missing teeth	Red stop warning light (gravity 2 fault) light up

Troubleshooting

Check the connection and condition of the CKP sensor connector and repair if necessary. Ensure the sensor is correctly fitted on the engine.
Check the connection and condition of the ECM “C47” connector. Repair if necessary.
Check CKP sensor for resistance referring to “Crankshaft Position (CKP) Sensor (Engine Speed Sensor) Inspection” in Section 6E2. Replace CKP sensor if necessary.
Check the insulation, continuity and absence of interference resistance of the connections: • Between “C30-2” terminal of CKP sensor connector and “C47-23” terminal of ECM connector • Between “C30-1” terminal of CKP sensor connector and “C47-33” terminal of ECM connector Repair if necessary.
Check that the flywheel ring gear is not faulty (missing teeth).
If DTC P0335 is still detected, replace the ECM.

After Repair

Deal with any faults detected by SUZUKI scan tool.
Clear the DTC.
Carry out a road test followed by another check with the SUZUKI scan tool.

DTC P0340 Camshaft position sensor circuit malfunction

NOTE:

Fault finding procedure application conditions for stored DTC:
The DTC is detected when the starter motor is operating or the engine is running at idle speed.

Wiring Diagram

For wiring circuit and connector number, refer to “A-4 Engine control system (DSL Type5):” in Section 8A.

Detecting Condition

Status displayed on SUZUKI scan tool	Detecting condition	Indicator/warning light operation
D2	No signal	Does not light

Troubleshooting

Check the connection and condition of the CMP sensor connector. Repair if necessary.
Check the connection and condition of the ECM “C47” connector. Repair if necessary.
Check for 12 V after ignition feed on “C90-1” terminal of the CMP sensor connector. Check for earth on “C90-3” terminal of the CMP sensor connector. Repair if necessary.
Check the insulation, continuity and the absence of interference resistance on the following connections: • Between “C90-2” terminal of CMP sensor connector and “C47-24” terminal of ECM connector • Between “C90-3” terminal of CMP sensor connector and “C47-34” terminal of ECM connector Repair if necessary.
Check the valve timing referring to “Timing Belt Removal and Installation” in Section 6A2. Repair if necessary. If DTC P0340 is still detected, replace the CMP sensor.
If DTC P0340 is still detected, replace the ECM.

After Repair

Deal with any faults detected by SUZUKI scan tool.
Clear the DTC.
Carry out a road test followed by another check with the SUZUKI scan tool.

DTC P0380 Glow plug/heater circuit malfunction
DTC P0670 Glow plug module control circuit

NOTE:

- **DTC P0380 indicated only with SUZUKI scan tool.**
- **DTC P0670 indicated only with generic scan tool.**
- **This DTC only handles the fault finding with an open circuit.**

Wiring Diagram

For wiring circuit and connector number, refer to “A-4 Engine control system (DSL Type5):” in Section 8A.

Detecting Condition

Status displayed on SUZUKI scan tool	Detecting condition	Indicator/warning light operation
CO	Open circuit	Does not light

Troubleshooting

Check the connection and condition of the pre-heating unit power supply fuse. Replace the fuse if necessary.
Check the condition and connection of the pre-heating unit connector. Repair if necessary.
Check the condition and connection of the glow plug connectors. Repair if necessary.
Check the condition and connection of the ECM “C48” connector. Repair if necessary.
Check glow plugs for resistance referring to “Glow Plug Inspection” in Section 6E2. Replace the glow plug if necessary.
Check for 12 V battery feed on “C83-7” terminal of the pre-heating unit connector. Repair if necessary.
Check the continuity and insulation of the following connections: • Between “C48-10” terminal of ECM connector and “C83-3” terminal of pre-heating unit connector. • Between “C48-18” terminal of ECM connector and “C83-1” terminal of pre-heating unit connector. Repair if necessary. If DTC P0380 is still detected, replace the pre-heating unit.
If DTC P0380 is still detected, replace ECM.

After Repair

Deal with any faults detected by SUZUKI scan tool.
Clear the DTC.
Carry out a road test followed by another check with the SUZUKI scan tool.

DTC P0382 Glow plug/heater circuit B malfunction

NOTE:

If DTC P0382 is detected, starting difficult (even impossible when cold).

Wiring Diagram

For wiring circuit and connector number, refer to “A-4 Engine control system (DSL Type5):” in Section 8A.

Detecting Condition

Status displayed on SUZUKI scan tool	Detecting condition	Indicator/warning light operation
CO0	Open circuit or short circuit to ground	Does not light
CC1	Short circuit to 12 V	

Troubleshooting

Check the condition and connection of the pre-heating unit connector. Repair it if necessary.
Check the condition and condition of the ECM “C48” connector. Repair if necessary.
Check the continuity and insulation of the following connections: • “C83-7” terminal of pre-heating unit connector for power supply circuit. • Between “C48-10” terminal of ECM connector and “C83-3” terminal of pre-heating unit connector. • Between “C48-18” terminal of ECM connector and “C83-1” terminal of pre-heating unit connector. Repair if necessary. If DTC P0382 is still detected, replace the pre-heating unit.
If DTC P0382 is still detected, replace the ECM.

After Repair

Deal with any faults detected by SUZUKI scan tool.
Clear the DTC.
Carry out a road test followed by another check with the SUZUKI scan tool.

DTC P0400 Exhaust gas recirculation flow

DTC P2413 Exhaust gas recirculation system performance

NOTE:

- **DTC P2413 indicated only with generic scan tool.**
- **If DTC P0400 is detected, unstable idle speed and even stalling. Stating difficult or even impossible when cold, smoke emissions and loss of performance possible.**
- **Conditions for applying fault finding procedures to stored DTC:**
- **The DTC is detected with the engine running.**

Wiring diagram

For wiring circuit and connector number, refer to “A-4 Engine control system (DSL Type 5):” in Section 8A.

Detecting Condition

NOTE:

Generic scan tool displays status D5 of DTC P0400 as DTC P2413.

Status displayed on SUZUKI scan tool	Detecting condition	Indicator/warning light operation
D1	Parameter at limit minimum	Does not light
D2	Parameter at limit maximum	
D3	Incoherence	
D4	Above maximum threshold	
D5	Component stuck	MIL and injection warning light (gravity 1 fault) light up

Troubleshooting

Check the connection and condition of the EGR valve connector. Repair if necessary.
Check the condition of the ECM “C47” connector. Repair if necessary.
Check for 5 V on “C46-5” terminal of the EGR valve connector.
Check EGR valve for operation referring to “EGR Valve Inspection” in Section 6E2. Replace the EGR valve if necessary.
Check the continuity and insulation of the following connections: • Between “C46-1” terminal of EGR valve connector and “C47-5” terminal of ECM connector. • Between “C46-3” terminal of EGR valve connector and “C47-8” terminal of ECM connector. Repair If necessary.
In addition, if D4 or D5 is indicated: Remove the EGR valve. Check that there are no foreign bodies (scale, etc.) that could jam the valve. Remove any foreign bodies and clean the EGR valve. Refit the EGR valve. Clear the DTC. Carry out a road test and recheck DTC. If DTC P0400 is still detected, replace the EGR valve.
If DTC P0400 is still detected, replace the ECM.

After Repair

Deal with any faults detected by SUZUKI scan tool.
Clear the DTC.

Carry out a road test followed by another check with the SUZUKI scan tool.

DTC P0403 Exhaust gas recirculation control circuit

NOTE:

- **Fault finding procedure application conditions for stored fault:**
  The DTC is detected with the engine idling.

Wiring diagram

For wiring circuit and connector number, refer to “A-4 Engine control system (DSL Type 5):” in Section 8A.

Detecting Condition

Status displayed on SUZUKI scan tool	Detecting condition	Indicator/warning light operation
CO	Open circuit	MIL light up
CC0	Short circuit to ground	
CC1	Incoherence	
D2	Overheat	Does not light

Troubleshooting

Check the connection and condition of the EGR valve connector. Repair if necessary.
Check the connection and condition of the ECM “C47” connector. Repair if necessary.
Check EGR valve for operation referring to “EGR Valve Inspection” in Section 6E2. Replace the EGR valve if necessary.
Check for 12 V on “C46-4” terminal of the EGR valve connector.
Check the continuity and insulation of the following connections: • Between “C46-1” terminal of EGR valve connector and “C47-5” terminal of ECM connector. • Between “C46-3” terminal of EGR valve connector and “C47-8” terminal of ECM connector. Repair If necessary. If DTC P0403 is still detected, replace the EGR valve.
If DTC P0403 is still detected, replace the ECM.

After Repair

Deal with any faults detected by SUZUKI scan tool.
Clear the DTC.
Carry out a road test followed by another check with the SUZUKI scan tool.

DTC P0409 Exhaust gas recirculation sensor circuit

NOTE:

Priority when dealing with a number of DTCs:
If DTC P0409 and DTC P0641 are detected, deal with DTC P0641 Sensor Reference Voltage 1 Circuit/ Open first.

Wiring Diagram

For wiring circuit and connector number, refer to “A-4 Engine control system (DSL Type5):” in Section 8A.

Detecting Condition

Status displayed on SUZUKI scan tool	Detecting condition	Indicator/warning light operation
D1	Below minimum threshold	Does not light
D2	Above maximum threshold	

Troubleshooting

Check the connection and condition of the EGR valve connector. Repair if necessary.
Check the condition and connection of the ECM “C47” connector. Repair if necessary.
Check for 5 V on “C46-4” terminal of the EGR valve connector. Check for earth on “C46-5” terminal of the EGR valve connector. Repair if necessary.
Check the continuity and insulation of the following connections: • Between “C47-17” terminal of the ECM connector and “C46-4” terminal of the EGR valve connector. • Between “C47-27” terminal of the ECM connector and “C46-6” terminal of the EGR valve connector. • Between “C47-37” terminal of the ECM connector and “C46-5” terminal of the EGR valve connector. Repair if necessary. If DTC P0409 is still detected, replace the EGR valve.
If DTC P0409 is still detected, replace the ECM.

After Repair

Deal with any faults detected by SUZUKI scan tool.
Clear the DTC.
Carry out a road test followed by another check with the SUZUKI scan tool.

DTC P0480 Radiator cooling fan low speed control system malfunction

NOTE:

This DTC indicated only with SUZUKI scan tool.

Wiring Diagram

For wiring circuit and connector number, refer to “A-4 Engine control system (DSL Type5):” in Section 8A.

Detecting Condition

Status displayed on SUZUKI scan tool	Detecting condition	Indicator/warning light operation
CO0	Open circuit or short circuit to ground	Does not light
CC1	Short circuit to 12 V	

Troubleshooting

Check the condition and connection of the radiator fan relay No.2. Repair if necessary.
Check the condition and connection of the ECM “E17” connector. Repair if necessary.
Check the radiator cooling fan relay No. 2 referring to “Radiator Cooling Fan Relay Inspection” in Section 6B2. Replace the relay if necessary.
Check for insulation, continuity and absence of interference resistance of the connections: • Between “E17-13” terminal of ECM connector and “C57-1” terminal of radiator fan relay No.2 socket With the ignition on, check for the presence of 12 volts supply on “C57-2” and “C57-3” terminals of radiator fan relay No.2 socket. Repair if necessary.

After Repair

Deal with any faults detected by SUZUKI scan tool.
Clear the DTC.
Carry out a road test followed by another check with the SUZUKI scan tool.

DTC P0481 Radiator cooling fan high speed control system malfunction

NOTE:

This DTC indicated only with SUZUKI scan tool.

Wiring Diagram

For wiring circuit and connector number, refer to “A-4 Engine control system (DSL Type5):” in Section 8A.

Detecting Condition

Status displayed on SUZUKI scan tool	Detecting condition	Indicator/warning light operation
CO0	Open circuit or short circuit to ground	Does not light
CC1	Short circuit to 12 V	

Troubleshooting

Check the condition and connection of the radiator fan relay No.1 and No.3. Repair if necessary.
Check the condition and connection of the ECM “E17” connector. Repair if necessary.
Check the radiator cooling fan relay No. 1 and No. 3 referring to “Radiator Cooling Fan Relay Inspection” in Section 6B2. Replace the relay if necessary.
Check for insulation, continuity and absence of interference resistance of the connections: • Between “E17-12” terminal of ECM connector and “C56-1” terminal of radiator fan relay No.1 socket • Between “E17-12” terminal of ECM connector and “C53-1” terminal of radiator fan relay No.3 socket With the ignition on, check for 12 volts supply on “C56-2” and “C53-2” terminals of radiator fan relay No.1 and No. 3 sockets. Repair if necessary.

After Repair

Deal with any faults detected by SUZUKI scan tool.
Clear the DTC.
Carry out a road test followed by another check with the SUZUKI scan tool.

DTC P0487 Exhaust gas recirculation throttle position control circuit

NOTE:

Priority when dealing with a number of DTCs:
If DTC P0487 and DTC P0641 are detected, deal with DTC P0641 Sensor Reference Voltage 1 Circuit/ Open first.

Wiring Diagram

For wiring circuit and connector number, refer to “A-4 Engine control system (DSL Type5):” in Section 8A.

Detecting Condition

Status displayed on SUZUKI scan tool	Detecting condition	Indicator/warning light operation
CO0	Open circuit or short circuit to ground	MIL light up
CC1	Short circuit to 12 V	

Troubleshooting

Check the connection and condition of the EGR valve connector. Repair if necessary.
Check the condition and connection of the ECM “C47” connector. Repair if necessary.
Check for 5 V on “C46-4” terminal of the EGR valve connector. Check for earth on “C46-5” terminal of the EGR valve connector. Repair if necessary.
Check the continuity and insulation of the following connections: • Between “C47-17” terminal of the ECM connector and “C46-4” terminal of the EGR valve connector. • Between “C47-27” terminal of the ECM connector and “C46-6” terminal of the EGR valve connector. • Between “C47-37” terminal of the ECM connector and “C46-5” terminal of the EGR valve connector. Repair if necessary. If DTC P0487 is still detected, replace the EGR valve.
If DTC P0487 is still detected, replace the ECM.

After Repair

Deal with any faults detected by SUZUKI scan tool.
Clear the DTC.
Carry out a road test followed by another check with the SUZUKI scan tool.

DTC P0500 Vehicle speed sensor circuit malfunction

NOTE:

This DTC indicated only with SUZUKI scan tool.

Wiring Diagram

For wiring circuit and connector number, refer to “A-4 Engine control system (DSL Type5):” in Section 8A.

Detecting Condition

Status displayed on SUZUKI scan tool	Detecting condition	Indicator/warning light operation
D1	Below minimum threshold	Does not light
D2	Incoherence	
D3	No signal	
D4	Permanent low level	

Troubleshooting

Check the condition and connection of the VSS connector. Repair if necessary.
Check the connection and condition of the ECM “C48” connector. Repair if necessary.
Check the continuity and absence of interference resistance of the connections: • “L46-1” terminal of the VSS for power supply circuit • “L46-2” terminal of the VSS for ground circuit Repair if necessary.
Check for insulation form the +12 volt feed on the connection: • Between “L46-3” terminal of VSS connector and “C48-23” terminal of ECM connector Repair if necessary. If DTC P0500 is still detected, replace the VSS.
If DTC P0500 is still detected, replace the ECM.

After Repair

Deal with any faults detected by SUZUKI scan tool.
Clear the DTC.
Carry out a road test followed by another check with the SUZUKI scan tool.

DTC P0513 Incorrect immobilizer key

NOTE:

This DTC indicated only with SUZUKI scan tool.
If DTC P0513 is detected, the engine stops and impossible to restart.

Wiring Diagram

For wiring circuit and connector number, refer to “A-4 Engine control system (DSL Type5)” in Section 8A.

Troubleshooting

Check the connection and condition of the ECM “C48” connector. Repair if necessary.
Check the connection and condition of the immobilizer control module connector. Repair if necessary.
Check for insulation, continuity and absence of interference resistance of the connections: • Between “C48-2” terminal of ECM connector and “G46-15” terminal of immobilizer control module connector Repair if necessary. If DTC P0513 is still detected, replace the immobilizer control module.
If DTC P0513 is still detected, replace the ECM.

After Repair

Deal with any faults detected by SUZUKI scan tool.
Clear the DTC.
Carry out a road test followed by another check with the SUZUKI scan tool.

DTC P0530 A/C refrigerant pressure sensor circuit

NOTE:

- **This DTC indicated only with SUZUKI scan tool.**
- **Priority when dealing with a number of DTCs:**
  If DTC P0530 and DTC P0641 are detected, deal with DTC P0641 Sensor Reference Voltage Circuit/ Open first.

Wiring Diagram

For wiring circuit and connector number, refer to “A-4 Engine control system (DSL Type5):” in Section 8A.

Detecting Condition

Status displayed on SUZUKI scan tool	Detecting condition	Indicator/warning light operation
CO1	Open circuit or short circuit to 12 V	Does not light
CC0	Short circuit to ground	

Troubleshooting

Check the connection and condition of the A/C pressure sensor. Repair if necessary.
Check the connection and condition of the ECM “C48” connector. Repair if necessary.
Check for 5 V on E100-1 of the A/C pressure sensor connector. Check for earth on E100-2 of the A/C pressure sensor connector. Repair if necessary.
Check for insulation, continuity and absence of interference resistance of the connections: • Between “E100-1” terminal of A/C pressure sensor connector and “C48-3” terminal of ECM connector • Between “E100-3” terminal of A/C pressure sensor connector and “C48-9” terminal of ECM connector • Between “E100-2” terminal of A/C pressure sensor connector and “C48-27” terminal of ECM connector Repair if necessary. If DTC P0530 is still detected, replace the A/C pressure sensor.
If DTC P0530 is still detected, replace the ECM.

After Repair

Deal with any faults detected by SUZUKI scan tool.
Clear the DTC.
Carry out a road test followed by another check with the SUZUKI scan tool.

DTC P0560 System voltage

NOTE:

- **This DTC indicated only with SUZUKI scan tool.**
- **This DTC is detected, engine shuts off and won't start.**

Wiring Diagram

For wiring circuit and connector number, refer to "A-4 Engine control system (DSL Type5):" in Section 8A.

Detecting Condition

Status displayed on SUZUKI scan tool	Detecting condition	Indicator/warning light operation
D1	Below minimum threshold	Injection warning light (gravity 1 fault) light up
D2	Above maximum threshold	

Troubleshooting

Measure the battery voltage when the ignition is switched on. If the battery voltage is less than 11 V recharge the battery.
Check the connection and condition of the battery terminals. Repair if necessary.
Check the vehicle's charge circuit. Repair if necessary.
Check the connection and condition of the ECM "E17" connector. Repair if necessary.
Check the insulation, continuity and absence of interference resistance of the connections: • ECM "E17-11" terminal for power supply circuit • Between "E17-1" terminal of ECM connector and vehicle body ground • Between "E17-6" terminal of ECM connector and vehicle body ground • Between "E17-7" terminal of ECM connector and vehicle body ground • Between "E17-8" terminal of ECM connector and vehicle body ground Repair if necessary. If DTC P0560 is still detected, replace ECM.

After Repair

Deal with any faults detected by SUZUKI scan tool.
Clear the DTC.
Carry out a road test followed by another check with the SUZUKI scan tool.

DTC P0571 Brake switch circuit

NOTE:

This DTC indicated only with SUZUKI scan tool.

Wiring Diagram

For wiring circuit and connector number, refer to “A-4 Engine control system (DSL Type5):” in Section 8A.

Detecting Condition

Status displayed on SUZUKI scan tool	Detecting condition	Indicator/warning light operation
CO0	Open circuit or short circuit to ground	Dose not light
D1	No signal	

Troubleshooting

Check the connection and condition of the stop (brake) lamp switch connector. Repair if necessary.
Check the connection and condition of the ECM “E17” connector. Repair if necessary.
Check the stop (brake) lamp switch referring to “Stop (Brake) Lamp Switch” in Section 8. Replace the stop (brake) lamp switch if necessary.
Check for insulation, continuity and absence of interference resistance of the connections: Between “E144-4” terminal of stop (brake) lamp switch connector and “E17-28” terminal of ECM connector Repair If necessary. If DTC P0571 is still defected, replace the stop (brake) lamp switch.
If DTC P0571 is still detected, replace the ECM.

After Repair

Deal with any faults detected by SUZUKI scan tool.
Clear the DTC.
Carry out a road test followed by another check with the SUZUKI scan tool.

DTC P0604 Control module internal fail

NOTE:

- **This DTC indicated only with SUZUKI scan tool.**
- **Fault finding procedure application conditions for stored DTC:**
  The fault is declared present with the engine idling.
- **If DTC P0604 is detected, engine stopped and restarting is impossible.**

Detecting Condition

Status displayed on SUZUKI scan tool	Detecting condition	Indicator/warning light operation
D1	RAM integrity	Red stop warning light (gravity 2 fault) light up
D2	Injector calibration code written failure	

Troubleshooting

Check that the registered injector calibration code matched the injectors. If not, write the injector calibration code referring to “ECM Registration (Programming)” in Section 6E2. If injector calibration code corresponds correctly to the injectors, replace the ECM.

After Repair

Deal with any faults detected by SUZUKI scan tool.
Clear the DTC.
Carry out a road test followed by another check with the SUZUKI scan tool.

DTC P0605 Control module program error

DTC P0606 Control module program error

NOTE:

- **This DTC indicated only with SUZUKI scan tool.**
- **If DTC P0606 is detected, engine shuts off or engine runs noisily at 1300 rpm.**

Detecting Condition

Status displayed on SUZUKI scan tool	Detecting condition	Indicator/warning light operation
D1	Analogue/ digital converter	Red stop warning light (gravity 2 fault) light up
D4	Injector parameter fault	Injection warning light (gravity 1 fault) light up
D5	Checksum code/calibration fault	Red stop warning light (gravity 2 fault) light up
D6	Watchdog fault	
D7	Noise in injector control line	
D8	Watchdog stuck	Injection warning light (gravity 1 fault) light up

Troubleshooting for D1: Analogue/ digital converter, D5: Checksum code/calibration fault, D6: Watchdog fault and D8: Watchdog stuck

Check the connection and condition of the ECM “C47” connector. Repair if necessary.
Rewrite program in the ECM again, refer to “ECM Registration (Programming)” in Section 6E2. If DTC P0606 is still detected, replace the ECM.

Troubleshooting for D4: Injector parameter fault

Check that the registered injector calibration code matches the injectors. If not, rewrite the injector calibration codes in the ECM referring to “ECM Registration (Programming)” in Section 6E2. If injector calibration code corresponds correctly to the injectors, replace the ECM.

Troubleshooting for D7: Noise in injector control line

Check the ECM harness condition (pinched, cut, worn, damaged connector) between each fuel injector connector and ECM connector. Repair if necessary. If DTC P0606 is still detected, replace the ECM.

After Repair

Deal with any faults detected by SUZUKI scan tool.
Clear the DTC.
Carry out a road test followed by another check with the SUZUKI scan tool.

DTC P062F Control module EEPROM failure

NOTE:

If DTC P062F is detected, engine speed forced 1300 rpm.

Detecting Condition

NOTE:

Generic scan tool displays status with * mark only.

Status displayed on SUZUKI scan tool	Detecting condition	Indicator/warning light operation
D1	Write EEPROM fault	Injection warning light (gravity 1 fault) light up
*D2	Read EEPROM fault	MIL and injection warning light (gravity 1 fault) light up

Troubleshooting

Check the connection and condition of the ECM connectors. Repair if necessary. If DTC P062F is still detected, replace the ECM.

After Repair

Deal with any faults detected by SUZUKI scan tool.
Clear the DTC.
Carry out a road test followed by another check with the SUZUKI scan tool.

DTC P0641 Sensor reference voltage 1 circuit/open

NOTE:

- **This DTC indicated only with SUZUKI scan tool.**
- **Priority when dealing with a number of DTCs:**
  If DTC P0641 and either one of DTC P0100, DTC P0190, DTC P0225, DTC P0235, DTC P0409, DTC P0530 or DTC P2120 are detected, deal with DTC P0641 Sensor Reference Voltage 1 Circuit /Open first.
- **If DTC P0641 is detected, engine stopped and starting impossible.**

Wiring Diagram

For wiring circuit and connector number, refer to “A-4 Engine control system (DSL Type5):” in Section 8A.

Detecting Condition

Status displayed on SUZUKI scan tool	Detecting condition	Indicator/warning light operation
D1	Parameter at limit minimum	Red stop warning light (gravity 2 fault) light up
D2	Parameter at limit maximum	

Troubleshooting

Check the condition and connection of the connectors on all sensors with a 5 V feed. • A/C pressure sensor • Boost pressure sensor • Fuel pressure sensor • APP sensor • EGR valve • MAF and IAT sensor Repair if necessary.
Check the condition and connection of ECM connectors “E17”, “C47” and “C48”. Repair if necessary.
To locate any internal fault in one of the sensors with a 5 V supply (short circuit), disconnect earth of the sensors on the list above. Clear DTC and recheck DTC. If the faulty sensor is located, check its connections and that it is in order. If necessary replace the sensor.
Check the insulation, continuity and absence of interference resistance of the connections: • Between “C48-3” terminal of ECM connector and “E100-3” terminal of A/C pressure sensor • Between “C47-16” terminal of ECM connector and “C49-1” terminal of boost pressure sensor • Between “C47-15” terminal of ECM connector and “C91-1” terminal of fuel pressure sensor • Between “E17-4” terminal of ECM connector and “E97-3” terminal wire of APP sensor • Between “C47-17” terminal of ECM connector and “C46-4”terminal wire of EGR valve • Between “C47-18” terminal of ECM connector and “C98-5” terminal of MAF and IAT sensor Repair if necessary.
If DTC P0641 is still detected, replace the ECM.

After Repair

Deal with any faults detected by SUZUKI scan tool.
Clear the DTC.
Carry out a road test followed by another check with the SUZUKI scan tool.

DTC P0645 A/C compressor relay control circuit

NOTE:

This DTC indicated only with SUZUKI scan tool.

Wiring Diagram

For wiring circuit and connector number, refer to “A-4 Engine control system (DSL Type5):” in Section 8A.

Detecting Condition

Status displayed on SUZUKI scan tool	Detecting condition	Indicator/warning light operation
CO0	Open circuit or short circuit to ground	Does not light
CC1	Short circuit to 12 V	

Troubleshooting

Check the connection and condition of the A/C relay. Repair if necessary.
Check the connection and condition of the ECM “C48” connector. Repair if necessary.
Check for insulation, continuity and absence of interference resistance of the connections: • Between “C55-1” terminal of A/C relay socket and “C48-21” terminal of ECM connector Repair if necessary. If DTC P0645 is still detected, replace the A/C relay.

After Repair

Deal with any faults detected by SUZUKI scan tool.
Clear the DTC.
Carry out a road test followed by another check with the SUZUKI scan tool.

DTC P0651: Sensor reference voltage 2 circuit/open

Wiring Diagram

For wiring circuit and connector number, refer to “A-4 Engine control system (DSL Type5):” in Section 8A.

NOTE:

If DTC P0651 is detected, the idle speed is locked at 1000 rpm, engine performance is reduced to 75%.

Detecting Condition

Status displayed on SUZUKI scan tool	Detecting condition	Indicator/warning light operation
CC0	Short circuit to ground	Injection warning light (gravity 1 fault) light up
CO0	Open circuit or short circuit to 12 V	

Troubleshooting for CC0: Short circuit to ground

Check the connection and condition of the APP sensor connector. Repair if necessary.
Check the condition and connection of the ECM “E17” connector. Repair if necessary.
Check APP sensor referring to “APP Sensor Inspection” in Section 6E2. If the resistance is not, replace APP sensor.
Check for 5 V on “E97-2” terminal of the APP sensor connector. Check for earth on “E97-6” terminal of the APP sensor connector. Repair if necessary.
Check the insulation and continuity of the following connection: Between “E17-15” terminal of the ECM connector and “E97-2” terminal of the APP sensor connector. Repair if necessary.
Disconnect ECM “E17” connector and the APP sensor connector. Check the earth insulation of the connection on “E17-15” terminal of the ECM connector. Repair if necessary.
If DTC P0651 is still detected, replace the ECM.

Troubleshooting for CO0: Open circuit or short circuit to 12 V

Check the connection and condition of the APP sensor connector. Repair if necessary.
Check the condition and connection of the ECM “E17” connector. Repair if necessary.
Check APP sensor referring to “APP Sensor Inspection” in Section 6E2. If the resistance is not, replace APP sensor.
Check for 5 V on “E97-2” terminal of the APP sensor connector. Check for earth on “E97-6” terminal of the APP sensor connector. Repair if necessary.
Disconnect ECM “E17” connector and the APP sensor connector. • Check the insulation on ECM connector between “E17-15” and “E17-27” terminals. • Check the +12 V insulation of the connection on “E17-15” terminal of the ECM connector. Repair if necessary.
Check the insulation and continuity of the following connection: • Between “E17-15” terminal of the ECM connector and “E97-2” terminal of the APP sensor connector. • Between “E17-27” terminal of the ECM connector and “E97-6” terminal of the APP sensor connector. Repair if necessary.
If DTC P0651 is still detected, replace the ECM.

After repair

Deal with any faults detected by SUZUKI scan tool.
Clear the DTC.
Carry out a road test followed by another check with the SUZUKI scan tool.

DTC P0685 Main relay control circuit malfunction

Wiring Diagram

For wiring circuit and connector number, refer to “A-4 Engine control system (DSL Type5):” in Section 8A.

Detecting Condition

NOTE:

Generic scan tool displays status with *mark only.

Status displayed on SUZUKI scan tool	Detecting condition	Indicator/warning light operation
*D1	Relay stuck open	Does not light
D2	Relay stuck shut	

Troubleshooting

Check the main relay supply fuse in main fuse box. Replace the fuse if necessary.
Check the connection and condition and connection of the main relay socket. Repair if necessary.
Check the condition and connection of the ECM connectors “E17” and “C48”. Repair if necessary.
Check for insulation, continuity and absence of interference resistance of the connections: • Between main fuse output and “C54-2 and 4” terminals of main relay socket terminal • Between “C54-1” terminal of main relay socket and “C48-24” terminal of ECM connector • Between “C54-3” terminal of main relay socket and “E17-2” terminal of ECM connector • Between “C54-3” terminal of main relay socket and “C48-30” terminal of ECM connector • Between “C54-3” terminal of main relay socket and “C48-29” terminal of ECM connector • Between “E17-1” terminal of ECM connector and vehicle body ground • Between “E17-6” terminal of ECM connector and vehicle body ground • Between “E17-7” terminal of ECM connector and vehicle body ground • Between “E17-8” terminal of ECM connector and vehicle body ground Repair if necessary.
Check main relay for operation referring to “Main Relay and Radiator Fan Relay Inspection” in Section 6E2. Replace the main relay if necessary.
If DTC P0685 is still detected, replace the ECM.

After Repair

Deal with any faults detected by SUZUKI scan tool.
Clear the DTC.
Carry out a road test followed by another check with the SUZUKI scan tool.

DTC P1641 Additional heater relay circuit 1

NOTE:

This DTC indicated only with SUZUKI scan tool.

Wiring Diagram

For wiring circuit and connector number, refer to “A-4 Engine control system (DSL Type5):” in Section 8A.

Detecting Condition

Status displayed on SUZUKI scan tool	Detecting condition	Indicator/warning light operation
CO0	Open circuit or short circuit to ground	Dose not light
CC1	Short circuit to 12 V	

Troubleshooting

Check the condition and connection of the additional heater relay No.1 socket. Repair if necessary.
Check the condition of the ECM “C48” connector. Repair if necessary.
Check the insulation, continuity and absence of interference resistance of the connections: • Between “C48-15” terminal of ECM connector and “E93-10” terminal of additional heater relay No.1 socket With the ignition on, check for the 12 V supply on “E93-6” terminal and “E93-9” terminal of additional heater relay No.1 socket. Repair if necessary. If DTC P1641 is still detected, replace the relay.

After Repair

Deal with any faults detected by SUZUKI scan tool.
Clear the DTC.
Carry out a road test followed by another check with the SUZUKI scan tool.

DTC P1642 Additional heater relay circuit 2

NOTE:

This DTC indicated only with SUZUKI scan tool.

Wiring Diagram

For wiring circuit and connector number, refer to “A-4 Engine control system (DSL Type5):” in Section 8A.

Detecting Condition

Status displayed on SUZUKI scan tool	Detecting condition	Indicator/warning light operation
CO0	Open circuit or short circuit to ground	Does not light
CC1	Short circuit to 12 V	

Troubleshooting

Check the condition and connection of the additional heater relay No.2 and No.3 socket. Repair if necessary.
Check the condition of the ECM “C48” connector. Repair if necessary.
Check the insulation, continuity and absence of interference resistance of the connections: • Between “C48-16” terminal of ECM connector and “E93-5” terminal of additional heater relay No.2 socket • Between “C48-16” terminal of ECM connector and “E173-4” terminal of additional heater relay No.3 socket With the ignition on, check for the 12 volts supply the following terminals: • Between “E93-1” terminal of additional heater relay No.2 socket and vehicle body ground • Between “E93-4” terminal of additional heater relay No.2 socket and vehicle body ground • Between “E173-3” terminal of additional heater relay No.3 socket and vehicle body ground • Between “E173-2” terminal of additional heater relay No.3 socket and vehicle body ground. Repair if necessary. If the fault persists, replace the relay.

After Repair

Deal with any faults detected by SUZUKI scan tool.
Clear the DTC.
Carry out a road test followed by another check with the SUZUKI scan tool.

DTC P2120 Pedal position sensor 2 circuit

NOTE:

- **Priority when dealing with a number of DTCs:**
  If DTC P2120 and DTC P0651 are detected, deal with DTC P0651 Sensor Reference Voltage 2 Circuit/ Open first.
- **If DTC P2120 is detected, engine speed maintained above 1000 rpm and engine performance reduced to 75%.**
- **If DTC P2120 and DTC P0225 are detected, engine speed fixed at 1300 rpm.**

Wiring Diagram

For wiring circuit and connector number, refer to “A-4 Engine control system (DSL Type5):” in Section 8A.

Detecting Condition

Status displayed on SUZUKI scan tool	Detecting condition	Indicator/warning light operation
CO0	Open circuit or short circuit to ground	Injection warning light (gravity 1 fault) light up
CC1	Short circuit to 12 V	

Troubleshooting for CO0: Open circuit or short circuit to ground

Check the connection and condition of the pedal position sensor connector Repair if necessary.
Check the connection and condition of the ECM “E17” connector Repair if necessary.
Check pedal position sensor for resistance referring to “PPS (Accelerator Pedal Position Sensor) Inspection” in Section 6E2. Replace pedal position sensor if necessary.
Check the following: • Check for 5 V on “E97-2” terminal of the pedal position sensor connector • Check for earth on “E97-6” terminal of the pedal position sensor connector Repair if necessary.
Disconnect the ECM “E17” connector and the pedal position sensor connector. Check the insulation from earth on “E17-21” terminal of ECM connector. Repair if necessary.
Check the continuity of the connection: • Between “E97-1” terminal of pedal position sensor connector and “E17-21” terminal of ECM connector Repair if necessary.
If DTC P2120 is still detected, replace the ECM.

Troubleshooting for CC1: Short circuit to + 12 volt

Check the connection and condition of the pedal position sensor connector Repair if necessary.
Check the connection and condition of the ECM “E17” connector Repair if necessary.
Check pedal position sensor for resistance referring to “PPS (Accelerator Pedal Position Sensor) Inspection” in Section 6E2. Replace pedal position sensor if necessary.
Disconnect the ECM “E17” connector and the pedal position sensor connector. Check the insulation from the 12 V feed on “E17-15” terminal and “E17-21” terminal of ECM connector. Repair if necessary.
Check the following: • Check for 5 V on “E97-2” terminal of the pedal position sensor connector • Check for earth on “E97-6” terminal of the pedal position sensor connector Repair if necessary.
Check the continuity of the connections: • Between “E97-1” terminal of pedal position sensor connector and “E17-21” terminal of ECM connector • Between “E97-2” terminal of pedal position sensor connector and “E17-15” terminal of ECM connector • Between “E97-6” terminal of pedal position sensor connector and “E17-27” terminal of ECM connector Repair if necessary.
Disconnect “E17” connector from the ECM and the connector from the pedal position sensor. Check for insulation between “E17-15” terminal and “E17-21” terminal of ECM connector. Repair if necessary.
If DTC P2120 is still detected, replace the ECM.

After Repair

Deal with any faults detected by SUZUKI scan tool.
Clear the DTC.
Carry out a road test followed by another check with the SUZUKI scan tool.

DTC P2226 Barometric pressure circuit malfunction

Detecting Condition

Status displayed on SUZUKI scan tool	Detecting condition	Indicator/warning light operation
CO0	Open circuit or short circuit to ground	Does not light
CC1	Short circuit to 12 V	

Troubleshooting

Replace the ECM

After Repair

Deal with any faults detected by SUZUKI scan tool.
Clear the DTC.
Carry out a road test followed by another check with the SUZUKI scan tool.

DTC P2263: Turbo charger boost system performance

NOTE:
If DTC P2263 is detected, air flow regulation switched off, EGR valve closed, turbo charging regulation switched off and reduced performance.

Wiring Diagram

For wiring circuit and connector number, refer to “A-4 Engine control system (DSL Type5):” in Section 8A.

Detecting Condition

Status displayed on SUZUKI scan tool	Detecting condition	Indicator/warning light operation
D1	At minimum limit	Does not light
D2	At maximum limit	Injection warning light (gravity 1 fault) light up

Troubleshooting

Check that the turbo charger is operating correctly, check the air intake system (blocked, etc.), check the boost pressure signal and check the gear number when changing gear.
Check the condition and connection of the boost pressure control solenoid valve connector. Repair if necessary.
Check for the boost pressure control solenoid valve feed on “C97-2” terminal of the ECM connector. Repair if necessary.
Check the condition and connection of “C47-3” terminal of the ECM connector. Repair if necessary.
Check the boost pressure control solenoid valve for resistance referring to “Boost Pressure Control Solenoid Valve Inspection” in Section 6E2. Replace the boost pressure control solenoid valve if necessary.

Check the continuity and insulation of the following connections: • Between “C47-3” terminal of the ECM connector and “C97-1” terminal of the boost pressure control solenoid valve connector • Between “C54-3” of the main relay connector and “C97-2” terminal of the boost pressure control solenoid valve connector Repair if necessary.
If DTC P2263 is still detected, replace the ECM.

After Repair

Deal with any faults detected by SUZUKI scan tool.
Clear the DTC.
Carry out a road test followed by another check with the SUZUKI scan tool.

Fault Finding – Customer Complaints

NOTE:

Only consult this customer complaint after a complete check using the scan tool.

Symptom	Condition	Referring Table
No communication with the ECM	Not communication scan tool and ECM	Refer to Table 1
Starting fault	The engine does not start	Refer to Table 2
	The engine starts with difficulty or starts then stalls	Refer to Table 3
	Starting difficult with warm engine	Refer to Table 4
Idle speed fault	Rough idle speed (pumping)	Refer to Table 5
	Idle speed too high or too low	Refer to Table 6
Behaviour while driving	Unexpected acceleration/deceleration and engine stalling	Refer to Table 7
	Response fault	Refer to Table 8
	Engine stop (timing)	Refer to Table 9
	Engine jerking	Refer to Table 10
	Lack of power	Refer to Table 11
	Too much power	Refer to Table 12
	Excessive consumption	Refer to Table 13
	Overspeed when lifting off acceleration or changing gear	Refer to Table 14
	Engine dies when pulling away	Refer to Table 15
Noise, odours or smoke	Engine rattling, noisy	Refer to Table 16
	Blue, white or black smoke	Refer to Table 17
	Smoke (blue, white or black) on acceleration	Refer to Table 18

Table 1 No dialogue with the ECM

Troubleshooting

Try the scan tool on another vehicle.
Check the ECM earth point.
Check: • Check the connection between the scan tool and the data link connector • Check the main and circuit fuses
Check the voltage (12 volts) between the following terminals (ignition switch turned ON): • Between “G91-16” wire and “G91-4” wire of data link connector • Between “G91-16” wire and “G91-5” wire of data link connector Repair if necessary.
Check the insulation, continuity and absence of interference resistance of the connections: • Between “E17-2” terminal of ECM connector and “C54-3” wire of main relay socket • Between “C48-29” terminal of ECM connector and “C54-3” wire of main relay socket • Between “C48-30” terminal of ECM connector and “C54-3” wire of main relay socket • Between “E17-11” terminal of ECM connector and circuit fuse socket terminal • Between “C48-24” terminal of ECM connector and “C54-1” wire of main relay socket (relay control) • Between “E17-1” terminal of ECM connector and vehicle body ground • Between “E17-6” terminal of ECM connector and vehicle body ground • Between “E17-7” terminal of ECM connector and vehicle body ground • Between “E17-8” terminal of ECM connector and vehicle body ground • Between “E17-31” terminal of ECM connector and “G91-7” wire of data link connector (K-line) Repair if necessary.

Table 2 The engine does not start

Troubleshooting

Step	Action	Yes	No
1	Check that the fuel tank is correctly filled and that the fuel type is suitable. Is the fuel type suitable and the tank correctly filled?	Go to Step 2.	Refill the fuel tank correctly.
2	Is the engine oil and coolant level correct?	Go to Step 3.	Top up the oil and coolant.
3	Is the starter motor working properly?	Go to Step 4.	Carry out the required repairs.
4	Check the following: • Check the low pressure circuit referring to “Test 1: Low Pressure Circuit Check” in this section • Check for leaks in the high pressure circuit • Check the electrical circuit referring to “Test 2: Electrical Circuit Check” in this section • Check the engine parameters referring to “Test 4: Parameter Check” in this section • Check the air inlet circuit referring to “Test 5: Air Inlet Circuit Check” in this section Is it in good condition?	Go to Step 5.	Carry out the required repairs.
5	Check the “Fuel Rail Pressure” by using SUZUKI scan tool. Is parameter indicated below 50 bar?	Go to Step 6.	Apply the fault finding procedure for “DTC P0190 Rail pressure sensor circuit”.
6	Is the engine wiring harness cut off or jammed?	Carry out the required repairs.	Go to Step 7.
7	Check that the glow plugs are working properly. Is the glow plug resistance above 1 Ω?	Replace the glow plugs.	Go to Step 8.
8	Are the compressions correct?	Go to Step 9.	Carry out the required repairs.
9	Check the injectors referring to “Test 3: Injector Check” in this section. • Check the high pressure pump referring to “Test 7: High Pressure System Check” in this section • Check the ECM referring to “Test 6: ECM Check” in this section Is it in good condition?	End of fault finding.	Carry out the required repairs.

Table 3 The engine starts with difficulty or starts then stalls

Troubleshooting

Step	Action	Yes	No
1	Check that the fuel tank is correctly filled and that the fuel type is suitable. Is the fuel type suitable and the tank correctly filled?	Go to Step 2.	Refill the fuel tank correctly.
2	Check the following: • Check the low pressure circuit referring to "Test 1: Low Pressure Circuit Check" in this section • Check for leaks in the high pressure circuit • Check the electrical circuit referring to "Test 2: Electrical Circuit Check" in this section • Check the engine parameters referring to "Test 4: Parameter Check" in this section • Check the air inlet circuit referring to "Test 5: Air Inlet Circuit Check" in this section Is it in good condition?	Go to Step 3.	Carry out the required repairs.
3	Check the valve timing referring to "Timing Belt Removal and Installation" in Section 6A2. Is it in good condition?	Go to Step 4.	Carry out the required repairs.
4	Is the engine oil and coolant level correct?	Go to Step 5.	Top up the oil and coolant.
5	Is the catalytic converter sealed off or damaged?	Replace the catalytic converter.	Go to Step 6.
6	Is the engine wiring harness cut off or jammed?	Carry out the required repairs.	Go to Step 7.
7	Check that the glow plugs are working properly. Is the glow plug resistance over 1 Ω?	Replace the glow plug.	Go to Step 8.
8	Are the compressions correct?	Go to Step 9.	Carry out the required repairs.
9	Check the following: • Check the high pressure system referring to "Test 7: High pressure System check" in this section • Check the ECM referring to "Test 6: ECM Check" in this section Is it in good condition?	End of fault finding.	Carry out the required repairs.

Table 4 Starting difficult with warm engine

Troubleshooting

Step	Action	Yes	No
1	Check that the fuel tank is correctly filled and that the fuel type is suitable. Is the fuel type suitable and the tank correctly filled?	Go to Step 2.	Refill the fuel tank correctly
2	Check the following: • Check the low pressure circuit referring to “Test 1: Low Pressure Circuit Check” in this section • Check the injectors referring to “Test 3: Injector Check” in this section • Check the engine parameters referring to “Test 4: Parameter Check” in this section • Check the air inlet circuit referring to “Test 5: Air Inlet Circuit Check” in this section Is it in good condition?	Go to Step 3.	Carry out the required repairs.
3	Is the catalytic converter sealed off or damaged?	Replace the catalytic converter.	Go to Step 4.
4	Are the compressions correct?	Go to Step 5.	Carry out the required repairs.
5	Is the engine wiring harness cut off or jammed?	Carry out the required repairs.	Go to Step 6.
6	Check the ECM referring to “Test 6: ECM Check” in this section Is it in good condition?	End of fault finding.	Carry out the required repairs.

Table 5 Rough idle speed (pumping)

Troubleshooting

Step	Action	Yes	No
1	Check that the fuel tank is correctly filled and that the fuel type is suitable. Is the fuel type suitable and the tank correctly filled?	Go to Step 2.	Refill the fuel tank correctly.
2	Check the following: • Check the low pressure circuit referring to “Test 1: Low Pressure Circuit Check” in this section • Check the engine parameters referring to “Test 4: Parameter Check” in this section Is it in good condition?	Go to Step 3.	Carry out the required repairs.
3	Is the engine wiring harness cut off or jammed?	Carry out the required repairs.	Go to Step 4.
4	Check for leaks in the high pressure circuit. Is it in good condition?	Go to Step 5.	Carry out the required repairs.
5	Check that the glow plugs are working properly. Is the glow plug resistance over 1 Ω?	Replace the glow plug.	Go to Step 6.
6	Are the compressions correct?	Go to Step 7.	Carry out the required repairs.
7	Check the following: • Check the high pressure pump referring to “Test 7: High Pressure System Check” in this section Is it in good condition?	End of fault finding.	Carry out the required repairs.

Table 6 Idle speed too high/too low

Troubleshooting

Step	Action	Yes	No
1	Check the following: • Check the electrical circuit referring to “Test 2: Electrical Circuit Check” in this section • Check the engine parameters referring to “Test 4: Parameter Check” in this section Is it in good condition?	Go to Step 2.	Carry out the required repairs.
2	Is the clutch linkage correct?	Go to Step 3.	Carry out the required repairs.
3	Check the ECM referring to “Test 6: ECM Check” in this section Is it in good condition?	End of fault finding.	Carry out the required repairs.

Table 7 Unexpected acceleration/deceleration and engine stalling

Troubleshooting

Step	Action	Yes	No
1	Check the following: • Check the engine parameters referring to “Test 4: Parameter Check” in this section • Check the air inlet circuit referring to “Test 5: Air Inlet Circuit Check” in this section Is it in good condition?	Go to Step 2.	Carry out the required repairs.
2	Is the engine wiring harness cut off or jammed?	Carry out the required repairs.	Go to Step 3.
3	Check the injectors referring to “Test 3: Injector Check” in this section Is it in good condition?	Go to Step 4.	Carry out the required repairs.
4	Check that the engine has aspirated its oil (engine racing). Is it in good condition?	Go to Step 5.	Carry out the required repairs.
5	Check the ECM referring to “Test 6: ECM Check” in this section Is it in good condition?	End of fault finding.	Carry out the required repairs.

Table 8 Response fault

Troubleshooting

Step	Action	Yes	No
1	Check the following: • Check the engine parameters referring to “Test 4: Parameter Check” in this section • Check the air inlet circuit referring to “Test 5: Air Inlet Circuit Check” in this section Is it in good condition?	Go to Step 2.	Carry out the required repairs.
2	Check that the turbocharger is working properly. Is the turbocharger correct?	Go to Step 3.	Carry out the required repairs.
3	Check the low pressure circuit referring to “Test 1: Low Pressure Circuit Check” in this section Is it in good condition?	Go to Step 4.	Carry out the required repairs.
4	Are the compressions correct?	Go to Step 5.	Carry out the required repairs.
5	Check for leaks in the high pressure circuit. Is it in good condition?	Go to Step 6.	Carry out the required repairs.
6	Check the following: • Check the injectors referring to “Test 3: Injector Check” in this section • Check the ECM referring to “Test 6: ECM Check” in this section Is it in good condition?	End of fault finding.	Carry out the required repairs.

Table 9 Engine stop/stalling

Troubleshooting

Step	Action	Yes	No
1	Check that the fuel tank is correctly filled and that the fuel type is suitable. Is the fuel type suitable and the tank correctly filled?	Go to Step 2.	Refill the fuel tank correctly.
2	Check for leaks in the high pressure circuit. Is it in good condition?	Go to Step 3.	Carry out the required repairs.
3	Check the following: • Check the low pressure circuit referring to “Test 1: Low Pressure Circuit Check” in this section • Check for leaks in the high pressure circuit • Check the electrical circuit referring to “Test 2: Electrical Circuit Check” in this section • Check the engine parameters referring to “Test 4: Parameter Check” in this section • Check the air inlet circuit referring to “Test 5: Air Inlet Circuit Check” in this section Is it in good condition?	Go to Step4.	Carry out the required repairs.
4	Is the engine oil and coolant level correctly?	Go to Step 5.	Top up the oil and coolant.
5	Is the engine wiring harness cut off or jammed?	Carry out the required repairs.	Go to Step 6.
6	Is the catalytic converter sealed off or damaged?	Replace the catalytic converter.	Go to Step 7.
7	Check that the engine has aspirated its oil (engine racing). Is it in good condition?	Go to Step 8.	Carry out the required repairs.
8	Check the following: • Check the high pressure pump referring to “Test 7: High Pressure System Check” in this section. • Check the ECM referring to “Test 6: ECM Check” in this section. Is it in good condition?	End of fault finding.	Carry out the required repairs.

Table 10 Engine jerking

Troubleshooting

Step	Action	Yes	No
1	Check that the fuel tank is correctly filled and that the fuel type is suitable. Is the fuel type suitable and the tank correctly filled?	Go to Step 2.	Refill the fuel tank correctly.
2	Check the following: • Check the low pressure circuit referring to “Test 1: Low Pressure Circuit Check” in this section • Check the engine parameters referring to “Test 4: Parameter Check” in this section Is it in good condition?	Go to Step 3.	Carry out the required repairs.
3	Is the engine wiring harness cut off or jammed?	Carry out the required repairs.	Go to Step 4.
4	Check that the glow plugs are working properly. Is the glow plug resistance over 1 Ω?	Replace the glow plug.	Go to Step 5.
5	Are the compressions correct?	Go to Step 6.	Carry out the required repairs.
6	Is the valve clearance properly adjusted?	Go to Step 7.	Make the necessary adjustments.
7	Check the following: • Check the high pressure pump referring to “Test 7: High Pressure System Check” in this section Is it in good condition?	Go to Step 8	Carry out the required repairs.
8	Check the fuel filter. Is it in good condition?	Go to Step 9.	Replace the fuel filter.
9	• Check the ECM referring to “Test 6: ECM Check” in this section Is it in good condition?	End of fault finding.	Carry out the required repairs.

Table 11 Lack of power

Troubleshooting

Step	Action	Yes	No
1	Check the fuel filter. Is it in good condition?	Go to Step 2.	Replace the fuel filter.
2	Check the following: • Check the low pressure circuit referring to “Test1: Low Pressure Circuit Check” in this section • Check the injectors referring to “Test 3: Injector Check” in this section Is it in good condition?	Go to Step 3.	Carry out the required repairs.
3	Is the engine oil level correct?	Go to Step 4.	Top up the oil.
4	Is the catalytic converter sealed off or damaged?	Replace the catalytic converter.	Go to Step 5.
5	Check that the turbocharger is working properly. Is the turbocharger correct?	Go to Step 6.	Carry out the required repairs.
6	Check the following: • Check the low pressure circuit referring to “Test 1: Low Pressure Circuit Check” in this section • Check the injectors referring to “Test 3: Injector Check” in this section • Check the high pressure test referring to “Test 7: high pressure System Check” in this section Is it in good condition?	Go to step 7.	Carry out the required repairs.
7	Are the compressions correct?	Go to Step 8.	Carry out the required repairs.
8	Is the valve clearance properly adjusted?	End of fault finding.	Make the necessary adjustments.

Table 12 Too much power

Troubleshooting

Step	Action	Yes	No
1	Check the following: • Check the engine parameters referring to “Test 4: Parameter Check” in this section • Check the air inlet circuit referring to “Test 5: Air Inlet Circuit Check” in this section Is it in good condition?	Go to Step 2.	Carry out the required repairs.
2	Check that the engine has aspirated its oil (engine racing). Is it in good condition?	Go to Step 3.	Carry out the required repairs.
3	Check the following: • Check the injectors referring to “Test 3: Injector Check” in this section • Check the ECM referring to “Test 6: ECM Check” in this section Is it in good condition?	End of fault finding.	Carry out the required repairs.

Table 13 Excessive consumption

Troubleshooting

Step	Action	Yes	No
1	Check that the fuel tank is correctly filled and that the fuel type is suitable. Is the fuel type suitable and the tank correctly filled?	Go to Step 2.	Refill the fuel tank correctly.
2	Check the low pressure circuit referring to “Test 1: Low Pressure Circuit Check” in this section Is it in good condition?	Go to Step 3.	Carry out the required repairs.
3	Check for leak in the high pressure circuit. Is it in good condition?	Go to Step 4.	Carry out the required repairs.
4	Check the following: • Check the injectors referring to “Test 3: Injector Check” in this section • Check for leaks in the high pressure circuit • Check the engine parameters referring to “Test 4: Parameter Check” in this section • Check the air inlet circuit referring to “Test 5: Air Inlet Circuit Check” in this section Is it in good condition?	Go to Step 5.	Carry out the required repairs.
5	Is the engine oil level correct?	Go to Step 6.	Top up the oil.
6	Is the catalytic converter clogged or damaged?	Replace the catalytic converter.	Go to Step 7.
7	Check that the turbocharger is working properly. Is the turbocharger correct?	Go to Step 8.	Carry out the required repairs.
8	Are the compressions correct?	Go to Step 9.	Carry out the required repairs.
9	Check the ECM referring to “Test 6: ECM Check” in this section. Is it in good condition?	End of fault finding.	Carry out the required repairs.

Table 14 Overspeed when lifting off accelerator or changing gear

Troubleshooting

Step	Action	Yes	No
1	Check that there are no obstacls that might impede the accelerator pedal travel (carpet, hard point. etc.). Is it in good condition?	Go to Step 2.	Carry out the required repairs.
2	Check the engine parameters referring to “Test 4: Parameter Check” in this section. Is it in good condition?	Go to Step 3.	Carry out the required repairs.
3	Is the engine wiring harness cut or pinched?	Carry out the required repairs.	Go to Step 4.
4	Is the clutch linkage properly adjusted?	Go to Step 5.	Carry out the required repairs.
5	Check that the engine has not aspirated its oil (engine racing).	Carry out the required repairs.	Go to Step 6.
6	Check that the turbocharger is working properly. Is the turbocharger correct?	Go to Step 7.	Carry out the required repairs.
7	Check the following: • Check the injectors referring to “Test 3: Injector Check” in this section • Check the ECM referring to “Test 6: ECM Check” in this section. Is it in good condition?	End of fault finding.	Carry out the required repairs.

Table 15 Engine dies on pulling away

Troubleshooting

Step	Action	Yes	No
1	Check the following: • Check the low pressure circuit referring to “Test 1: Low Pressure Circuit Check” in this section • Check the engine parameters referring to “Test 4: Parameter Check” in this section • Check the air inlet circuit referring to “Test 5: Air Inlet Circuit Check” in this section Is it in good condition?	Go to Step 2.	Carry out the required repairs.
2	Is the catalytic converter clogged or damaged?	Replace the catalytic converter.	Go to Step 3.
3	Is the clutch linkage properly adjusted?	Go to Step 4.	Carry out the required repairs.
4	Is the engine wiring harness cut or pinched?	Carry out the required repairs.	Go to Step 5.
5	Check the ECM referring to “Test 6: ECM Check” in this section Is it in good condition?	End of fault finding.	Carry out the required repairs.

Table 16 Engine rattling, noisy

Troubleshooting

Step	Action	Yes	No
1	Check that the fuel tank is correctly filled and that the fuel type is suitable. Is the fuel type suitable and the tank correctly filled?	Go to Step 2.	Refill the fuel tank correctly.
2	Check the levels of engine oil and coolant. Is it in good condition?	Go to Step 3.	Top up the oil and coolant.
3	Are the compressions correct?	Go to Step 4.	Carry out the required repairs.
4	Check that the glow plugs are working properly. Is the glow plug resistance over 1 Ω?	Replace the glow plug.	Go to Step 5.
5	Check the following: • Check the low pressure circuit referring to “Test 1: Low Pressure Circuit Check” in this section • Check the injectors referring to “Test 3: Injector Check” in this section • Check the engine parameters referring to “Test 4: Parameter Check” in this section • Check the air inlet circuit referring to “Test 5: Air Inlet Circuit Check” in this section Is it in good condition?	End of fault finding.	Carry out the required repairs.

Table 17 Blue, white or black smoke

Troubleshooting

Step	Action	Yes	No
1	Check that the fuel tank is correctly filled and that the fuel type is suitable. Is the fuel type suitable and the tank correctly filled?	Go to Step 2.	Refill the fuel tank correctly.
2	Check the following: • Check the engine parameters referring to “Test 4: Parameter Check” in this section • Check the air inlet circuit referring to “Test 5: Air Inlet Circuit Check” in this section Is it in good condition?	Go to Step 3.	Carry out the required repairs.
3	Is the engine oil level and coolant level correct?	Go to Step 4.	Top up the oil and coolant.
4	Check the low pressure circuit referring to “Test 1: Low Pressure Circuit Check” in this section Is it in good condition?	Go to Step 5.	Carry out the required repairs.
5	Is the catalytic converter clogged or damaged?	Replace the catalytic converter.	Go to Step 6.
6	Check that the engine has aspirated its oil (engine racing). Is it in good condition?	Go to Step 7.	Carry out the required repairs.
7	Check that the glow plugs are working properly. Is the glow plug resistance above 1 Ω?	Replace the glow plugs.	Go to Step 8.
8	Are the compressions correct?	Go to Step 9.	Carry out the required repairs.
9	Check the injectors referring to “Test 3: Injector Check” in this section Is it in good condition?	End of fault finding.	Carry out the required repairs.

Table 18 Blue, black or white smoke when accelerating

Troubleshooting

Step	Action	Yes	No
1	Check that the fuel tank is correctly filled and that the fuel type is suitable. Is the fuel type suitable and the tank correctly filled?	Go to Step 2.	Refill the fuel tank correctly.
2	Check the following: • Check the engine parameters referring to "Test 4: Parameter Check" in this section • Check the air inlet circuit referring to "Test 5: Air Inlet Circuit Check" in this section Is it in good condition?	Go to Step 3.	Carry out the required repairs.
3	Check the low pressure circuit referring to "Test 1: Low Pressure Circuit Check" in this section. Is it in good condition?	Go to Step 4.	Carry out the required repairs.
4	Is the engine oil and coolant level correct?	Go to Step 5.	Top up the oil and coolant.
5	Check that the turbocharger is working properly. Is the turbocharger correct?	Go to Step 6.	Carry out the required repairs.
6	Is the catalytic converter clogged or damaged?	Replace the catalytic converter.	Go to Step 7.
7	Check that the engine has aspirated its oil (engine racing). Is it in good condition?	Go to Step 8.	Carry out the required repairs.
8	Check that the glow plugs are working properly. Is the glow plug resistance above 1 Ω?	Replace the glow plugs.	Go to Step 9.
9	Are the compressions correct?	Go to Step 10.	Carry out the required repairs.
10	Is the engine wiring harness cut or pinched?	Carry out the required repairs.	Go to Step 11.
11	Check the following: • Check the injectors referring to "Test 3: Injector Check" in this section • Check the ECM referring to "Test 6: ECM Check" in this section Is it in good condition?	End of fault finding.	Carry out the required repairs.

Fault Finding – Tests

Some specific checks are grouped together into tests and are performed as required in the various fault finding tables or when interpreting faults.

Test 1: Low pressure circuit check

Test 2: Electrical circuit check

Test 3: Injector check

Test 4: Parameter check

Test 5: Air inlet circuit check

Test 6: ECM check

Test 7: High pressure system check

Test 8: High pressure circuit sealing check

Test 9: Injector sealing check

Test 10: Injector return flow in starting phase

Test 11: Diesel filter check

Test 1: Low Pressure Circuit Check

Step	Action	Yes	No
1	Check the conformity of the low pressure circuit connections. Are the low pressure circuit connections in order?	Go to Step 2.	Carry out the required repairs.
2	Check the condition of the priming pump, and that it is working properly. Look for leaks on the unions. Are there leaks in the hoses and unions?	Carry out the required repairs.	Go to Step 3.
3	Check for air bubbles in the diesel fuel. Are there any air bubbles in the low pressure circuit?	Bleed the low pressure circuit. Place a container under the filter: • Disconnect the leak return hose from the filter and cap the filter. • Pump with the priming pump until there is no air left. • Reconnect the return hose immediately.	Low pressure circuit correct.

Test 2: Electrical Circuit Check

Step	Action	Yes	No
1	Check the battery charge and that the alternator is working properly. Is the charge circuit correct?	Go to Step 2.	Carry out the required repairs.
2	Check the fuses. Are the fuses correct?	Go to Step 3.	Carry out the required repairs.
3	Check that the main relay is working properly. Is the main relay working properly?	Go to Step 4.	Replace the relay.
4	Check the engine earths. Are the engine earths correct?	The electrical circuit is correct.	Carry out the required repairs.

Test 3: Injector Check

Step	Action	Yes	No
1	Make a visual inspection around the injectors. Is there diesel fuel around the injectors?	Locate the source of leak and carry out the required repairs.	Go to Step 2.
2	Actuate the injectors using commands “Cylinder 1 Injector”, “Cylinder 2 Injector”, “Cylinder 3 Injector”, and “Cylinder 4 Injector” in output test on SUZUKI scan tool. Can you hear the operation sound of the injector?	Go to Step 3.	Carry out test 11. If test 11 is in order, replace the faulty injector(s).
3	Check the following: • Check the injector sealing referring to “Test 9 Injector Sealing Check” in this section • Check the injector return flow in starting phase referring to “Test 10 Injector Return Flow in Starting Phase” in this section Is it in good condition?	End of fault finding.	Carry out the required repairs.

Test 4: Parameter Check

Step	Action	Yes	No
1	Use the SUZUKI scan tool to check that injector calibration code corresponds to the injectors. Is injector calibration code correctly filled in?	Check that the “Data List” value (parameter) is consistent.	Use the SUZUKI scan tool to program injector calibration code into the memory, paying attention to the cylinder numbers.

Test 5: Air Inlet Circuit Check

Step	Action	Yes	No
1	Check for the presence of a leak/intake of air. Is it in good condition?	Go to Step 2.	Carry out the required repairs.
2	Check the condition of the air filter. Air filter correct?	Go to Step 3.	Replace the air filter.
3	Check that the intake manifold is not obstructed (dirty). Is the intake manifold blocked?	Clean the intake manifold.	Air circuit correct.

Test 6: ECM Check

Step	Action	Yes	No
1	Check the condition of the ECM connections (for bent pin, signs of oxidation, silicone, etc.). Check that the ECM connectors are locked correctly. Are the connectors poorly locked?	Lock the connectors correctly.	ECM correct.

Test 7 High Pressure System Check

NOTE:

It is useless and dangerous to engage the starter motor for more than 5 seconds.

Step	Action	Yes	No
1	It is possible to check the high pressure pump capacity by carrying out the following procedure: • Disconnect the fuel flow actuator connector • Disconnect connector from the four injectors • Connect the SUZUKI scan tool and check the rail pressure parameter • Run the starter motor for 5 seconds • Read the maximum rail pressure value Does the rail pressure greater than 1050 bar?	Injection pump correct.	Go to Step 2.
2	If the rail pressure below 900 bar, carry out "Test 11 Diesel Fuel Check" in this section after following procedure: • Make sure that the ignition circuit is working correctly (minimum engine speed 200 rpm at engine cranking). • Turn ignition switch OFF, connect the all electrical connections disconnected in Step 1. • Turn ignition switch ON, clear DTC by using SUZUKI scan tool. Is it in good condition?	Go to Step 3.	Carry out the required repairs.
3	Carry out the following test: • "Test 9 Injector Sealing Check" in this section • "Test 10 Injector Return Flow in Starting Phase" in this section Are there no faults?	Replace the high pressure pump.	Replace the faulty injector(s).

Test 8 High Pressure Circuit Sealing Test

NOTE:

- **Certain faults make it impossible to carry out this test - deal with these first.**
- **This test does not identify a minor leak due to a union not being tightened to torque.**
- **Watch out for any objects (tool or others) on the sides of the engine room.**

Procedure

- Engine is running.
- Tighten high pressure circuit specified torque.
- Engine coolant temperature above 60°C.
- Carry out "Leak detection test" by using SUZUKI scan tool and check for leaks in the high pressure circuit.

Test 9 Injector Sealing Check

NOTE:

- **Certain faults make it impossible to carry out this test - deal with these first.**
- **Watch out for any objects (tool or others) on the sides of the engine room.**
- **It is useless and dangerous to engage the starter for more than 5 seconds.**

Tooling required

Special Tool: 09912-96540 “Injector flow measuring kit” (Mot. 1711).

Procedure

Step	Action	Yes	No
1	Check the injector return volume following procedure: • Ensure that the engine coolant temperature is above 60°C. • Turn ignition switch OFF. • Disconnect the return pipes from the four injectors. • Cap the pump venturi tube to prevent the low pressure circuit from contamination. • Connect the four transparent tubes (09912-96540) in place of the return pipes. • Put the other ends of the four pipes into four graduated measuring cylinders (09912-96540). • Having carried out these preparations, start the engine and let it idle for 2 minutes. • Carry out “Leak detection test” by using SUZUKI scan tool. • Once the cycle is complete, carry out “Leak detection test” again to obtain a correct reading of the return volume of each injector. Is the return volume of one of the injectors above 35 ml?	Replace faulty injector(s).	Go to Step 2.
2	Carry out the following test to confirm the repair: • Disconnect the 4 transparent pipes and reconnect the injector return circuit. • With the ignition off, disconnect connector from fuel flow actuator and connect the test adapter in special tool (09912-96540). • Disconnect the 4 electrical connectors from all injectors. • Connect SUZUKI scan tool and display “Data list” on scan tool. • Run the starter for 5 seconds, read the “Fuel Rail Pressure” maximum value during the test on the SUZUKI scan tool. Is the rail pressure greater than 1050 bar?	End of test.	Carry out test 7.

After Repair

- Turn ignition switch OFF, and reconnect the four injectors electrically.
- Disconnect the test adapter and reconnect the fuel flow actuator connector.
- Turn ignition switch ON, and clear the injection faults using SUZUKI scan tool.

Test 10 Injector Return Flow in Starting Phase

NOTE:

- **Certain faults make it impossible to carry out this test - deal with these first.**
- **Watch out for any objects (tool or others) on the sides of the engine room.**
- **It is useless and dangerous to engage the starter for more than 5 seconds.**

Tooling required

Special Tool: 09912 - 96540 “Injector flow measuring kit” (Mot. 1711).

Procedure

Step	Action	Yes	No
1	Check the injector return volume following procedure: • Turn ignition switch OFF. • Disconnect the return pipes from the four injectors. • Cap the pump venturi tube to prevent the low pressure circuit from contamination. • Connect the four transparent pipes (09912-96540) in place of the return pipes. • Disconnect connector from fuel flow actuator and connect a test adapter in special tool (09912-96540). • Disconnect connectors from all four injectors. • Switch on the ignition and run the starter for 5 seconds. • Measure the amount of diesel fuel in each pipe. Is the leak return greater than 10 cm?	Replace faulty injector(s).	Go to Step 2.
2	Carry out the following test to confirm the repair: • Disconnect the four transparent pipes and reconnect the injector return circuit. • Connect SUZUKI scan tool and display “Data list” on scan tool. • Run the starter for 5 seconds, read the rail pressure maximum value “Fuel Rail Pressure” during the test on the SUZUKI scan tool. Is the rail pressure greater than 1050 bar?	End of test.	Carry out test 7.

After Repair

- Turn ignition switch OFF, and reconnect the four injectors electrically.
- Disconnect the test adapter and reconnect the fuel flow actuator connector.
- Turn ignition switch ON, and clear the DTCs using SUZUKI scan tool.

Test 11: Diesel filter check

Step	Action	Yes	No
1	Check the conformity of the fuel filter. Is the fuel filter in order?	Go to Step 2.	Replace the fuel filter.
2	With ignition switch off, analyze the diesel fuel in the fuel filter. • Disconnect the supply and return hoses from the filter. • Immediately block the filter inlets/outlets with the appropriate caps. • Remove the filter from its bracket and shake it well, keeping the caps in place and empty the contents of the filter into glass container by lifting up a protective cap and undoing the bleed screw. Can you see at bottom of the container a deposit of black particles?	Go to Step 3.	Fuel filter correct.
3	Pass a magnet beneath the container to collect only all the metal particles. Take the magnet away from the container. Do the particles collected using the magnet cover a surface area greater than 1 cm^2.	Repair or replace the entire injection system.	Fuel filter correct.

Special Tool

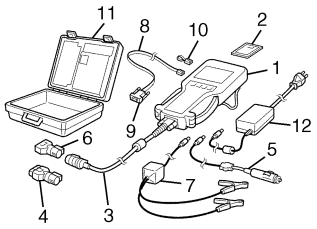

Tech 2 kit (SUZUKI scan tool)
(See NOTE)

NOTE:

This kit includes the following items.
1. Tech 2, 2. PCMCIA card, 3. DLC cable, 4. SAE 16/19 adapter, 5. Cigarette cable, 6. DLC loopback adapter, 7. Battery power cable, 8. RS232 cable, 9. RS232 adapter, 10. RS232 loopback connector, 11. Storage case, 12. Power supply

SECTION 6A2

ENGINE MECHANICAL (K9K ENGINE)

WARNING:

For vehicles equipped with a Supplemental Restraint (Air Bag) System:

- **Service on and around the air bag system components or wiring must be performed only by an authorized SUZUKI dealer. Refer to "Air Bag System Components and Wiring Location View" under "General Description" in air bag system section in order to confirm whether you are performing service on or near the air bag system components or wiring. Please observe all WARNINGs and "Service Precautions" under "On-Vehicle Service" in air bag system section before performing service on or around the air bag system components or wiring. Failure to follow WARNINGs could result in unintentional activation of the system or could render the system inoperative. Either of these two conditions may result in severe injury.**
- **Technical service work must be started at least 90 seconds after the ignition switch is turned to the "LOCK" position and the negative cable is disconnected from the battery. Otherwise, the system may be activated by reserve energy in the Sensing and Diagnostic Module (SDM).**

CAUTION:

Be sure to read "Precaution" in Section 6E2 before disconnecting fuel line or removing fuel system part(s). Failure to follow "Precautions" could result unneeded fuel system repairs.

6A2

CONTENTS

Diagnosis Information and Procedure 6A2-3
- Diagnosis Table 6A2-3
- Compression Check 6A2-3
- Oil Pressure Check 6A2-4
- Valve Lash (Clearance) 6A2-6
  - Measurement of valve lash (clearance) ..6A2-6
  - Replacement of tappet 6A2-6

Repair Instructions 6A2-8
- Air Cleaner Filter Removal and Installation 6A2-8
- Air Cleaner Filter Inspection and Cleaning 6A2-8
- Air Cleaner Assembly Removal and Installation 6A2-8
- Intercooler Components 6A2-9
- Intercooler Removal and Installation 6A2-10
- Cylinder Head Cover Components 6A2-11
- Cylinder Head Cover Removal and Installation 6A2-11
- Oil Pressure Switch Removal and Installation 6A2-13
- Heat Exchanger Removal and Installation 6A2-13
- EGR Valve and Intake Pipe Components 6A2-16
- EGR Valve and Intake Pipe Removal and Installation 6A2-17
- EGR Valve Disassembly and Reassembly 6A2-19
- EGR Valve and Intake Pipe Inspection 6A2-20
- Turbocharger Components 6A2-21
- Turbocharger Removal and Installation 6A2-22
- Turbocharger Inspection 6A2-23
- Exhaust Manifold Components 6A2-23
- Exhaust Manifold Removal and Installation 6A2-24
- Oil Pan and Oil Pump Strainer Components 6A2-25
- Oil Pan and Oil Pump Strainer Removal and Installation 6A2-26
- Engine Assembly Removal and Installation 6A2-30
- Timing Belt and Belt Tensioner Components 6A2-34
- Timing Belt and Belt Tensioner Removal and Installation 6A2-35
- Timing Belt and Belt Tensioner Inspection 6A2-43
- Oil Pump and Oil Pump Chain Components 6A2-44

Oil Pump and Oil Pump Chain Removal and Installation 6A2-44
Oil Pump and Oil Pump Chain Inspection 6A2-47
Camshaft and Tappet Components 6A2-48
Camshaft and Tappet Removal and Installation 6A2-49
Camshaft and Tappet Inspection 6A2-53
Valves and Cylinder Head Components ... 6A2-57
Valves and Cylinder Head Assembly Removal and Installation 6A2-57
Valves and Cylinder Head Assembly Inspection 6A2-60
Valves and Cylinder Head Assembly Disassembly and Reassembly 6A2-60
Valves and Cylinder Head Components Inspection 6A2-63
Pistons, Piston Rings, Connecting Rods and Cylinders Components 6A2-66
Pistons, Piston Rings, Connecting Rods and Cylinders Removal and Installation 6A2-67
Pistons, Piston Rings, Connecting Rods and Cylinders Disassembly and Reassembly 6A2-69
Pistons, Piston Rings, Connecting Rods and Cylinders Inspection 6A2-71
Main Bearings, Crankshaft and Cylinder Block Components 6A2-77
Main Bearings, Crankshaft and Cylinder Block Removal and Installation 6A2-78
Main Bearings, Crankshaft and Cylinder Block Inspection 6A2-84
Required Service Material 6A2-89
Tightening Torque Specifications 6A2-89
Special Tool 6A2-91

Diagnosis Information and Procedure

Diagnosis Table

Refer to “Fault Finding-Customer Complaints” in Section 6-2.

Compression Check

Check compression pressure on all 4 cylinders as follows:

1) Warm up engine.
2) Stop engine after warming up.

NOTE:

After warming up engine, place transmission gear shift lever in “Neutral” and set parking brake and block drive wheels.

3) Disconnect negative (–) cable at battery.

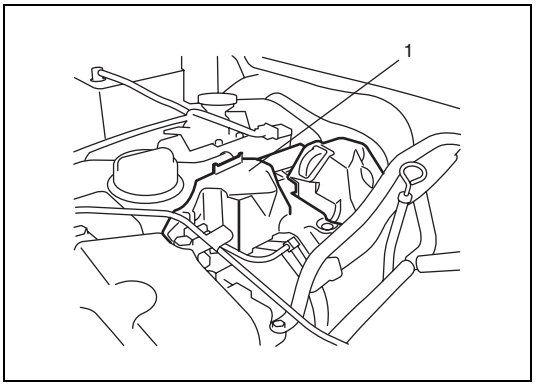

4) Remove injector cover (1).
5) Remove all glow plugs referring to “Glow Plug Removal and Installation” in Section 6E2.
6) Disconnect ECM connectors.

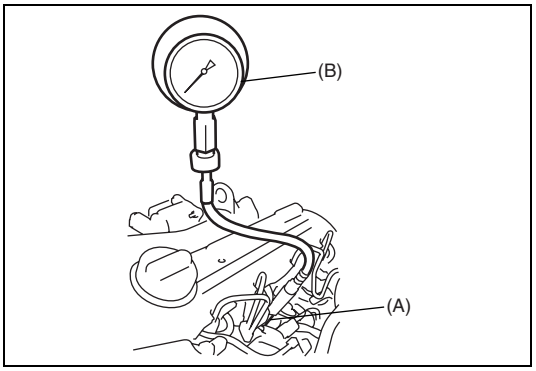

7) Install special tool (dummy heater plug) into glow plug hole.

Special tool
(A): 09917-78120
(B): 09912-57821

8) Connect negative (–) cable at battery.

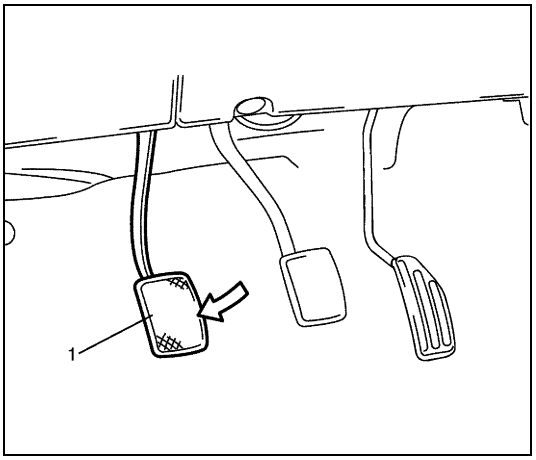

9) Disengage clutch (1) (to lighten starting load on engine).
10) Crank engine with fully charged battery and read highest pressure on compression gauge.

Compression pressure specification
Max. difference between any two cylinders:
300 kPa (3.0 kg/cm^2, 42.6 psi)

11) Carry out steps 7) to 10) on each cylinder to obtain 4 readings.
12) Disconnect negative (–) cable at battery.
13) After checking, install glow plugs referring to “Glow Plug Removal and Installation” in Section 6E2.

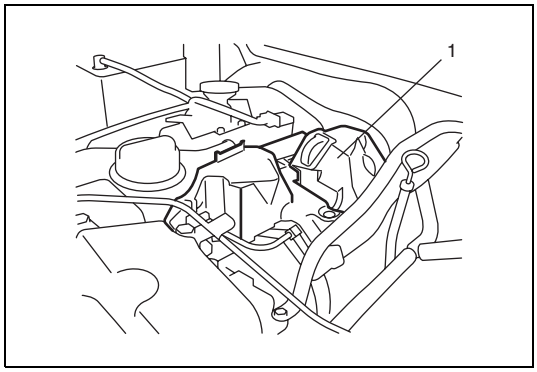

14) Install injector cover (1).
15) Connect ECM connectors.
16) Connect negative (–) cable at battery.

Oil Pressure Check

WARNING:
To avoid danger of being burned, do not touch exhaust manifold when exhaust system is hot.

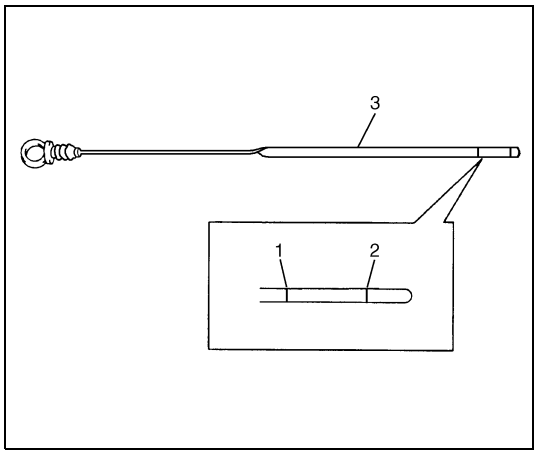

1) Prior to checking oil pressure, check the following items.
   - Oil level in oil pan.
     If oil level is low, add oil up to Full level mark (1) on oil level gauge (3).
   - Oil quality.
     If oil is discolored, or deteriorated, change it.
     For particular oil to be used, refer to “Engine Oil and Filter” in Section 0B.
   - Oil leaks.
     If leak is found, repair it.

2. Low level mark

2) Detach degassing tank from its bracket.

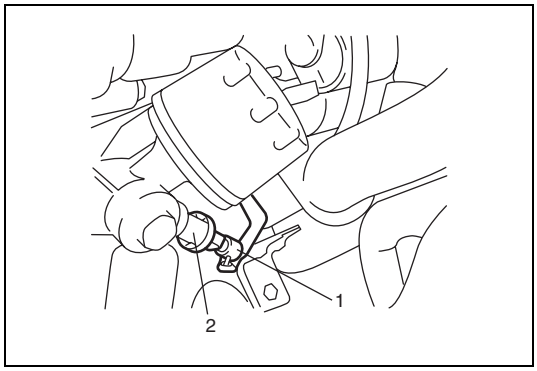

3) Disconnect oil pressure switch connector (1) and remove oil pressure switch (2) from oil filter unit bracket.

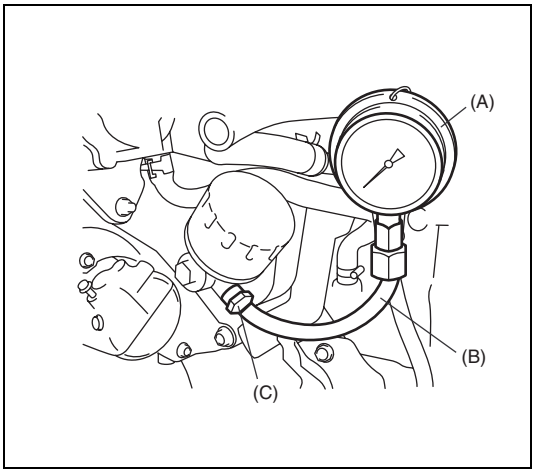

4) Install special tools (Oil pressure gauge) to vacated threaded hole.

CAUTION:

Be careful not to make special tool touch exhaust manifold when installing because exhaust manifold becomes very hot.

Special tool
(A): 09915-77311
(B): 09915-77420
(C): 09915-77430

5) Start engine and warm it up to normal operating temperature.

NOTE:

Be sure to place transmission gear shift lever in "Neutral" and set parking brake and block drive wheels.

6) After warming up, measure oil pressure.

Oil pressure specification:

100 – 140 kPa (1.0 – 1.4 kg/cm^2, 14.2 – 20.0 psi) at idle speed

330 – 370 kPa (3.3 – 3.7 kg/cm^2, 46.9 – 52.5 psi) at 3,000 r/min

7) Stop engine and remove oil pressure gauge and attachment.

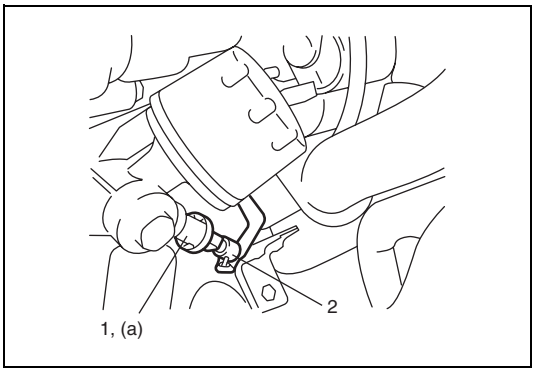

8) Reinstall oil pressure switch (1), and tighten switch to specified torque.

Tightening torque
Oil pressure switch (a): 35 N·m (3.5 kg-m, 25.5 lb-ft)

9) Connect oil pressure switch coupler (2).
10) Install degassing tank to its bracket.
11) Start engine and check oil pressure switch for oil leakage. If oil leakage is found, repair it.

Valve Lash (Clearance)

Measurement of valve lash (clearance)

1) Disconnect negative (–) cable at battery.
2) Remove cylinder head cover referring to “Cylinder Head Cover Removal and Installation” in this section.

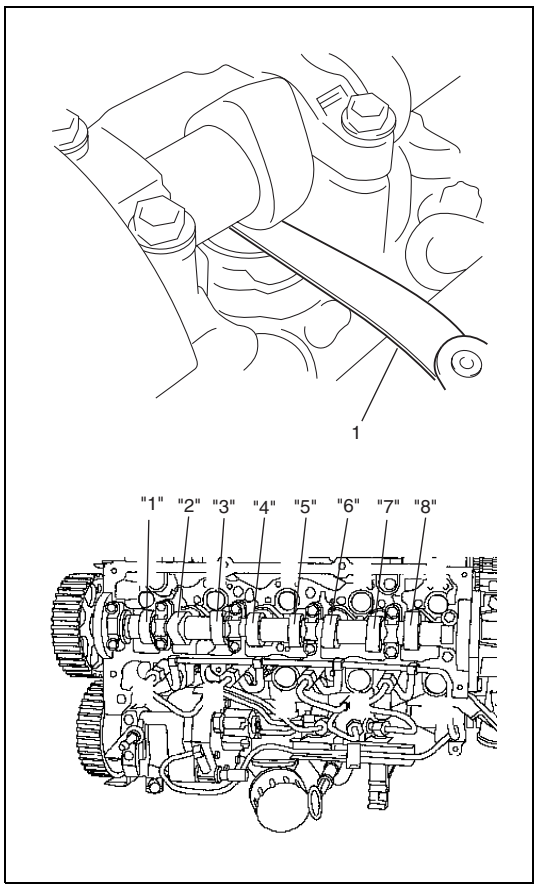

3) Turn crankshaft pulley clockwise until cam lobes become perpendicular to tappet faces at valves “1” and “6” as shown in figure.
4) Measure valve lashes with thickness gauge (1) according to the following procedure.
   a) Check valve lashes at valves “1” and “6”.
   b) Turn camshaft by 90° (by turning crankshaft with wrench).
   c) Make sure that cam lobes are perpendicular to tappet faces at valves to be checked (in this case, “5” and “8”), if not, adjust it by turning crankshaft. Check valve lashes.
   d) In the same manner as b) – c), check valve lashes at valves “4” and “7”.
   e) In the same manner as b) – c), check valve lashes at valves “2” and “3”.

If valve lash (clearance) is out of specification, record valve lash (clearance) and adjust it to specification by replacing tappet. Refer to “Replacement of tappet” under “Valve Lash (Clearance)” in this section.

Valve lash (clearance) specification

	When cold
Intake	**0.125 – 0.250 mm (0.00493 – 0.00984 in.)**
Exhaust	**0.325 – 0.450 mm (0.01280 – 0.01771 in.)**

Replacement of tappet

1) Measure valve lashes referring to “Measurement of Valve Lash (Clearance)” under “Valve Lash (Clearance)” in this section.
2) Remove tappet referring to “Camshaft and Tappet” in this section.

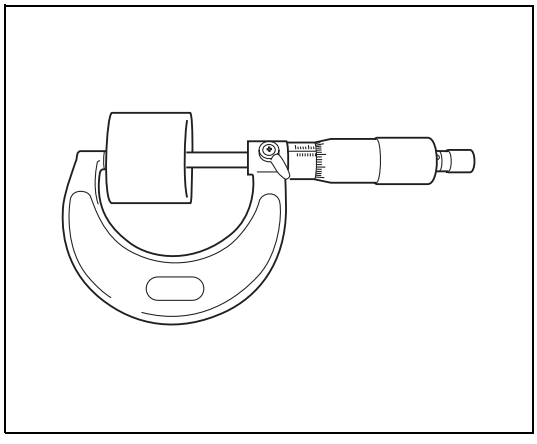

3) Using micrometer, measure the thickness of the removed tappet, and determine replacement tappet by calculating the thickness of new tappet with the following formula and table.

Intake side
A = B + C – 0.1875 mm (0.007382 in.)

Exhaust side
A = B + C – 0.3875 mm (0.015256 in.)

A: Thickness of new tappet
B: Thickness of removed tappet
C: Measured valve lash (clearance)

Example of intake side:

When thickness of removed tappet is 7.8875 mm (0.310531 in.), and measured valve lash (clearance) is 0.200 mm (0.00787 in.).
A = 7.8875 mm (0.310531 in.) + 0.200 mm (0.00787 in.) – 0.1875 mm (0.007382 in.) = 7.900 mm (0.31102 in.)
Calculated thickness of new tappet = 7.900 mm (0.31102 in.)

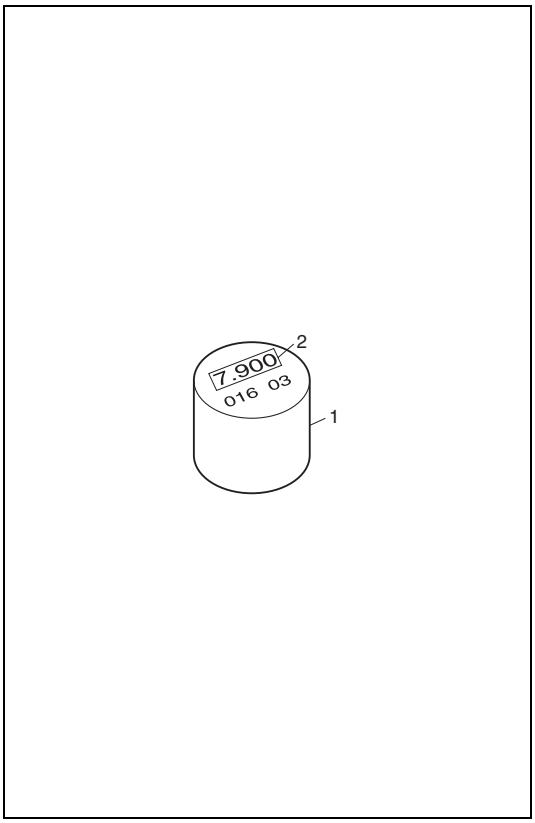

4) Select new tappet (1) with a thickness as close as possible to calculated value.

Available new tappets

Thickness mm (in.)	Thickness mm (in.)
7.550 mm (0.29724 in.)	7.875 mm (0.31004 in.)
7.575 mm (0.29823 in.)	7.900 mm (0.31102 in.)
7.600 mm (0.29921 in.)	7.925 mm (0.31201 in.)
7.625 mm (0.30020 in.)	7.950 mm (0.31299 in.)
7.650 mm (0.30118 in.)	7.975 mm (0.31398 in.)
7.675 mm (0.30217 in.)	8.000 mm (0.31496 in.)
7.700 mm (0.30315 in.)	8.025 mm (0.31595 in.)
7.725 mm (0.30413 in.)	8.050 mm (0.31693 in.)
7.750 mm (0.30512 in.)	8.075 mm (0.31791 in.)
7.775 mm (0.30610 in.)	8.100 mm (0.31890 in.)
7.800 mm (0.30709 in.)	8.125 mm (0.31988 in.)
7.825 mm (0.30807 in.)	8.150 mm (0.32087 in.)
7.850 mm (0.30906 in.)	

2. Tappet thickness

5) Install new tappet and camshaft referring to “Camshaft and Tappet Removal and Installation” in this section.
6) Measure valve lashes again referring to “Measurement of Valve Lash (Clearance)” under “Valve Lash (Clearance)” in this section.
7) Install cylinder head cover referring to “Cylinder Head Cover Removal and Installation” in this section.

Repair Instructions

Air Cleaner Filter Removal and Installation

Removal

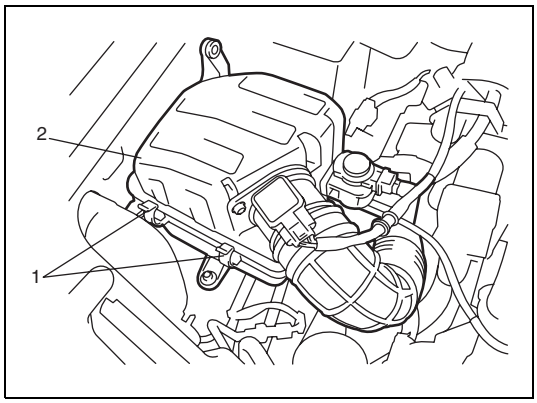

1) Open air cleaner case (2) unhooking its clamps (1).
2) Remove air cleaner filter from case.

Installation

Reverse removal procedure for installation.

Air Cleaner Filter Inspection and Cleaning

Inspection

Check filter for dirt. Replace if excessively dirty filter.

Cleaning

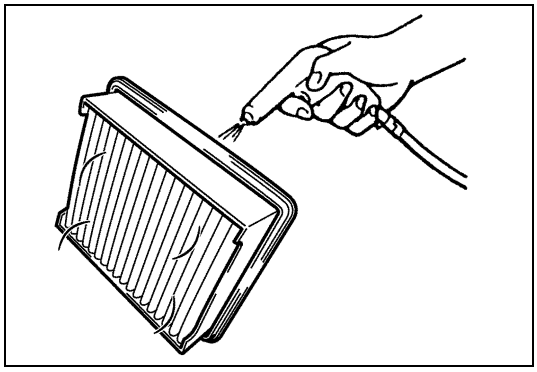

When cleaning filter, blow off dust by compressed air from air outlet side of filter. (i.e., the side facing up when installed in air cleaner case.)

Air Cleaner Assembly Removal and Installation

Removal

1) Disconnect negative (–) cable at battery.
2) Remove boost pressure control solenoid valve (4) from air cleaner assembly.

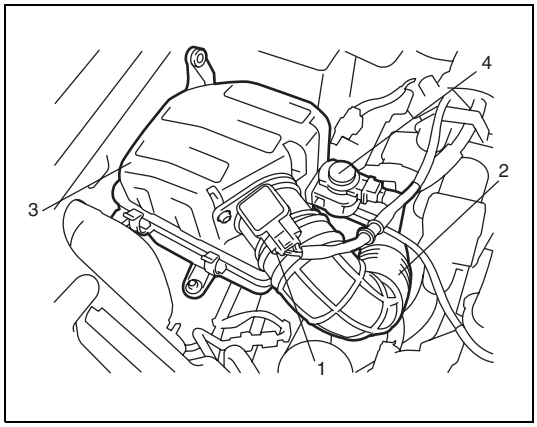

3) Disconnect MAF and IAT sensor connector (1).
4) Disconnect air cleaner outlet hose (2) from air cleaner assembly (3).
5) Remove air cleaner assembly from vehicle.

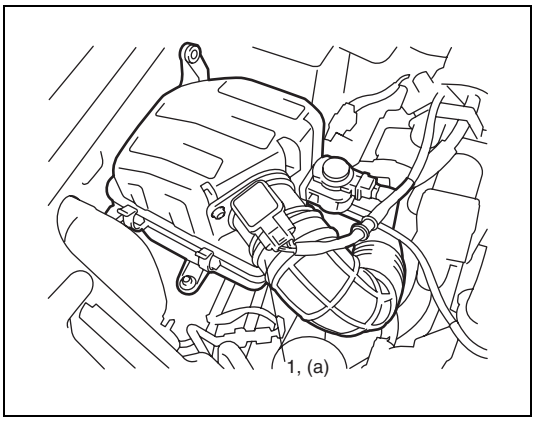

Installation

Reverse removal procedure for installation noting the following.

- Tighten air cleaner outlet hose clamp (1) to specified torque.

Tightening torque
Air cleaner outlet hose clamp (a):
2.5 N·m (0.25 kg-m, 2.0 lb-ft)

Intercooler Components

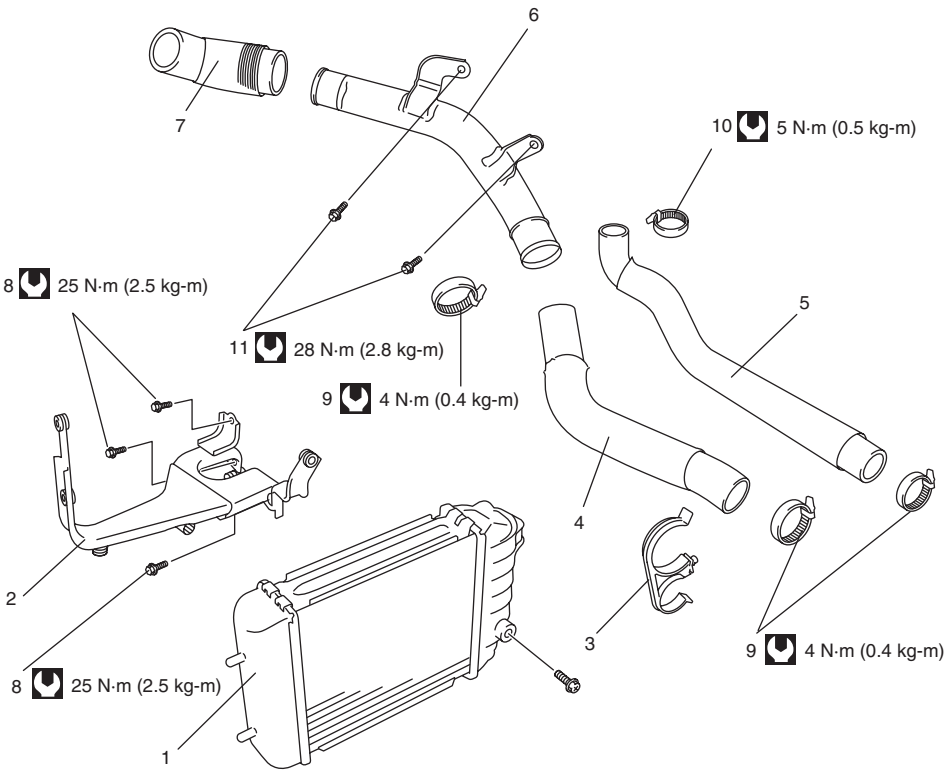

1. Intercooler	8. Intercooler bracket bolt
2. Intercooler bracket	9. Intercooler hose clamp No.1
3. Intercooler hose clamp	10. Intercooler hose clamp No.2
4. Intercooler outlet hose No.1	11. Intercooler outlet pipe bolt
5. Intercooler inlet hose	Tightening torque
6. Intercooler outlet pipe	
7. Intercooler outlet hose No.2	

Intercooler Removal and Installation

Removal

1) Remove front bumper.
2) Remove intercooler inlet hose (1) and outlet hose (2) from intercooler.
3) Remove intercooler (3) and its bracket (4).

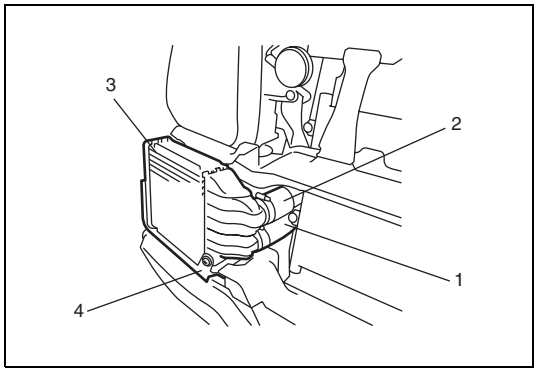

Installation

Reverse removal procedure for installation noting the following.

- Install intercooler hose clamp (1) in specified direction as shown in figure.

[A]: Upper side

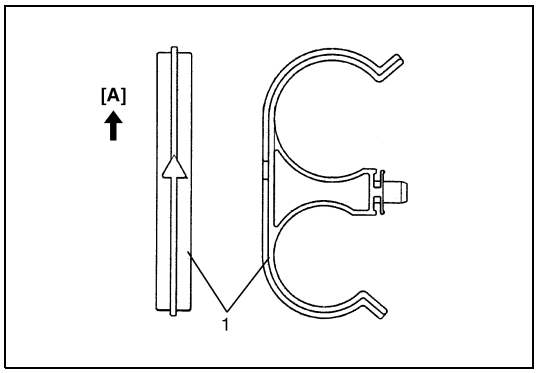

- Tighten intercooler bracket bolts and intercooler hose clamps (1) to specified torque.

Tightening torque
Intercooler bracket bolt: 25 N·m (2.5 kg-m, 18.0 lb-ft)
Intercooler hose clamp No.1 (a): 4 N·m (0.4 kg-m, 3.0 lb-ft)

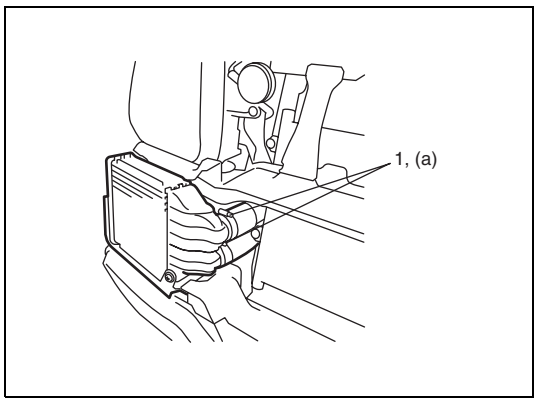

- Install front bumper.

Cylinder Head Cover Components

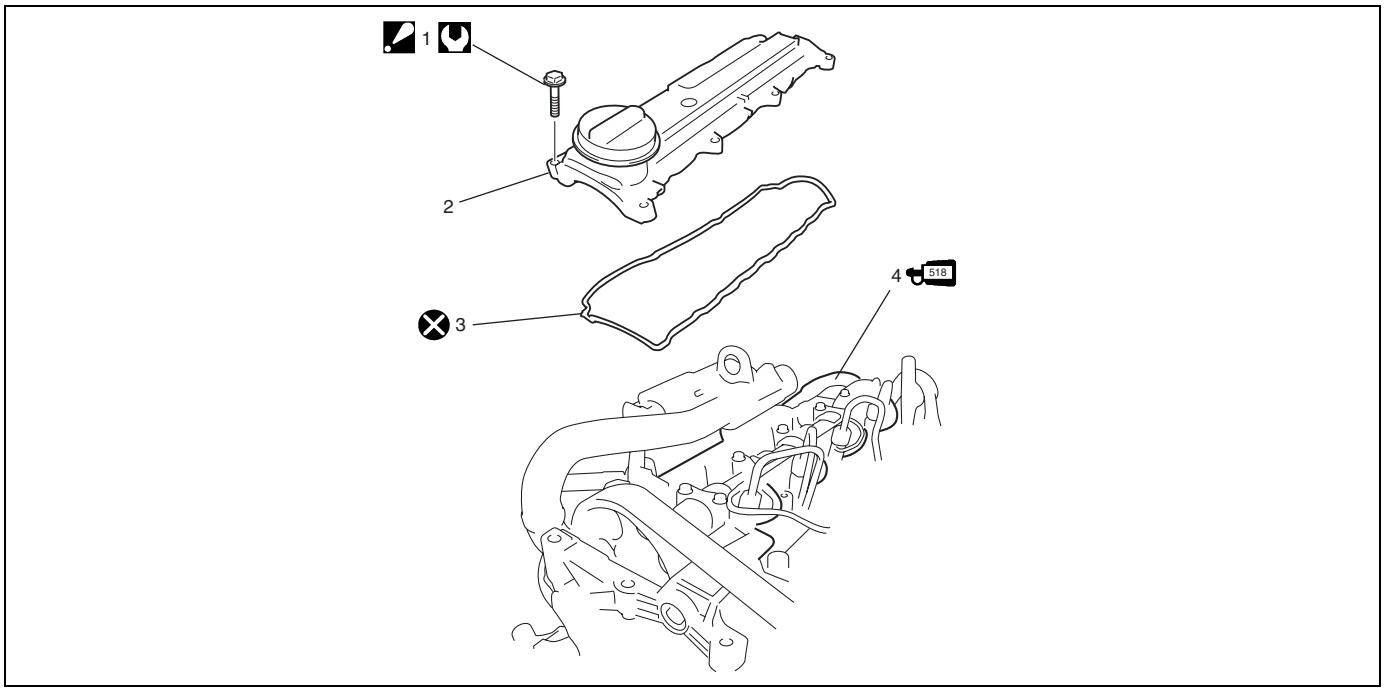

	1. Cylinder head cover bolt : Tighten 12 N·m (1.2 kg-m, 9.0 lb-ft) by the specified procedure.		3. Cylinder head cover gasket		Tightening torque
	2. Cylinder head cover	518	4. Cylinder head : Apply Loctite 518® referring to “Installation” under “Cylinder Head Cover Removal and Installation”.		Do not reuse.

Cylinder Head Cover Removal and Installation

Removal

1) Disconnect negative (–) cable at battery.
2) Remove drive belt referring to “Generator Drive Belt Removal and Installation” in Section 6H2.

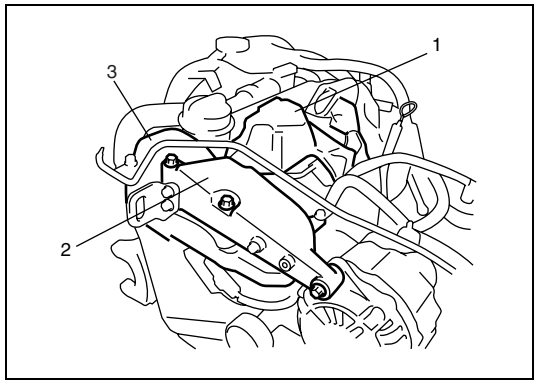

3) Remove injector cover (1), generator upper bracket (2), timing belt upper cover (3) and injector return hose cover .
4) Disconnect breather hose from cylinder head cover.

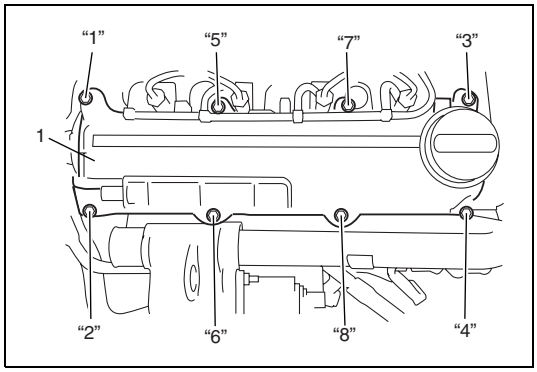

5) Loosen cylinder head cover bolts in such order ("1" to "8") as shown in the figure and remove them.
6) Remove cylinder head cover (1).

Installation

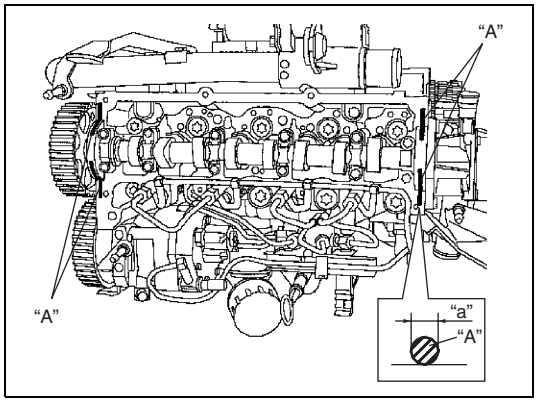

1) Remove oil, old sealant and dust from sealing surfaces. After cleaning, apply sealant "A" to cylinder head sealing surface area as shown in the figure.

"A": Loctite 518®

"a": 2 mm (0.08 in.)

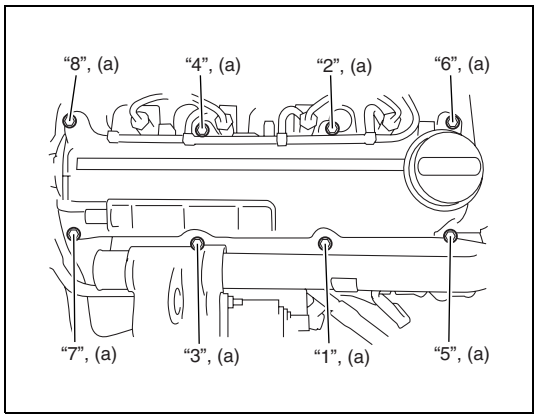

2) Install cylinder head cover to cylinder head as follows.
   a) Fit cylinder head cover to cylinder head with new gasket.
   b) Tighten cylinder head cover bolts temporarily by hand.
   c) Tighten cylinder head cover bolts specified torque by numerical order as shown in figure.

Tightening torque
Cylinder head cover bolt (a):
Tighten 12 N·m (1.2 kg-m, 9.0 lb-ft) by the specified procedure

3) Connect breather hose to cylinder head cover.

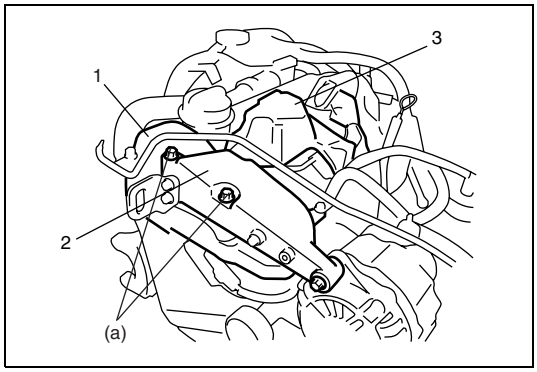

4) Install injector return hose cover, timing belt upper cover (1), generator upper bracket (2) and injector cover (3).

Tightening torque
Generator upper bracket bolt (a):
40 N·m (4.0 kg-m, 29.0 lb-ft)

5) Install drive belt referring to "Generator Drive Belt Removal and Installation" in Section 6H2.
6) Connect negative (–) cable at battery.

Oil Pressure Switch Removal and Installation

Removal

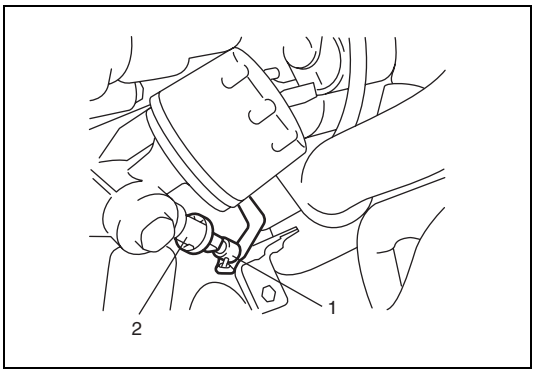

1) Disconnect negative (–) cable at battery.
2) Detach degassing tank from its bracket.
3) Disconnect oil pressure switch connector (1).
4) Remove oil pressure switch (2).

Installation

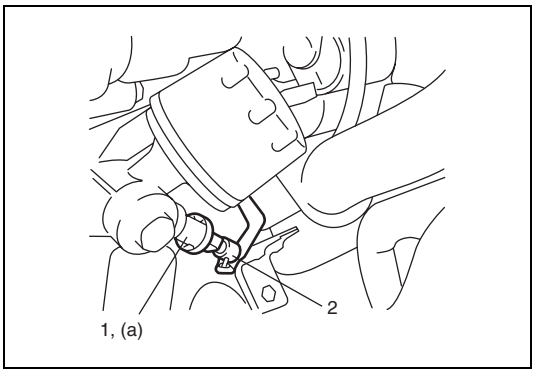

1) Install oil pressure switch (1) with new gasket.
2) Tighten oil pressure switch (1) to specified torque.

Tightening torque
Oil pressure switch (a): 35 N·m (3.5 kg-m, 25.5 lb-ft)

3) Connect oil pressure switch connector (2).
4) Install degassing tank to its bracket.
5) Start engine and check for oil leakage.

Heat Exchanger Removal and Installation

Removal

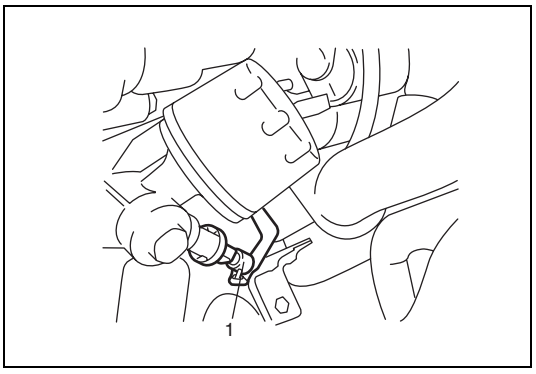

1) Disconnect negative (–) cable at battery.
2) Drain engine coolant referring to “Coolant Replacement” in Section 6B2.
3) Detach degassing tank from its bracket.
4) Disconnect oil pressure switch connector (1).
5) Remove generator referring to “Generator Dismounting and Remounting” in Section 6H2.
6) Remove compressor referring to “Compressor” in Section 1B.
7) Remove radiator outlet hose.

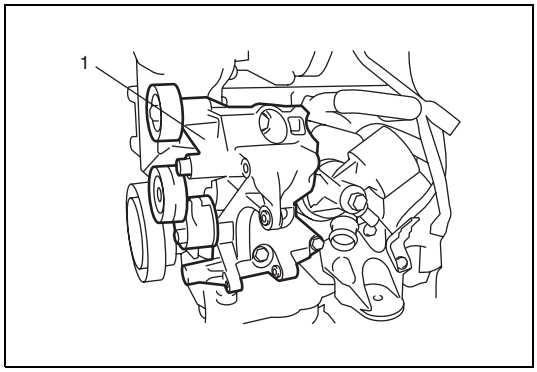

8) Remove compressor bracket (1).

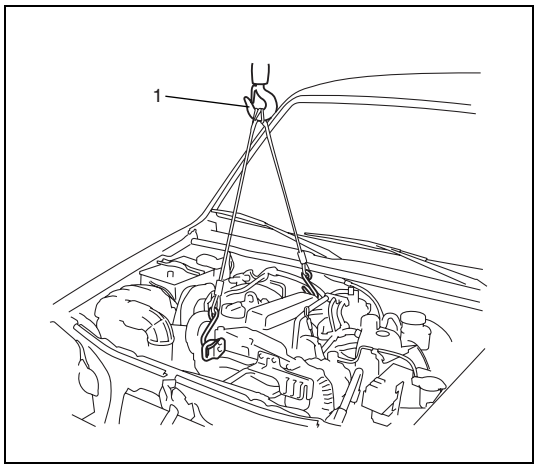

9) Install lifting device (1).

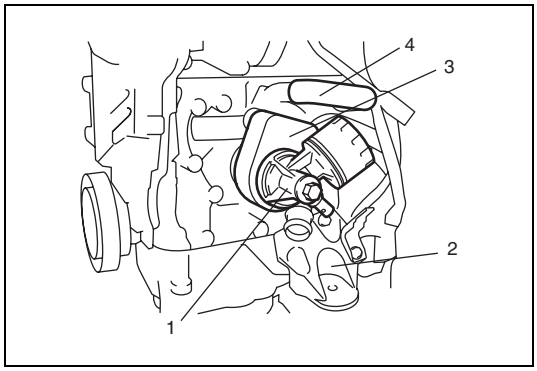

10) Remove oil filter unit bracket (1).
11) Disconnect heat exchanger hose (4).
12) Remove engine left mounting bracket (2), and then remove heat exchanger (3).

Installation

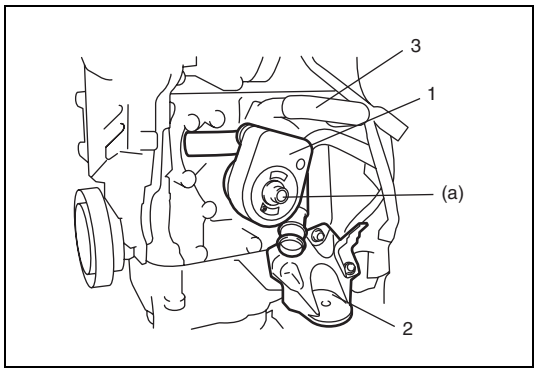

1) Install heat exchanger (1) with new gasket.

Tightening torque
Heat exchanger bolt (a): 45 N·m (4.5 kg-m, 32.5 lb-ft)

2) Install engine left mounting bracket (2) referring to “Main Bearings, Crankshaft and Cylinder Block Removal and installation” in this section.
3) Connect heat exchanger hose (3).

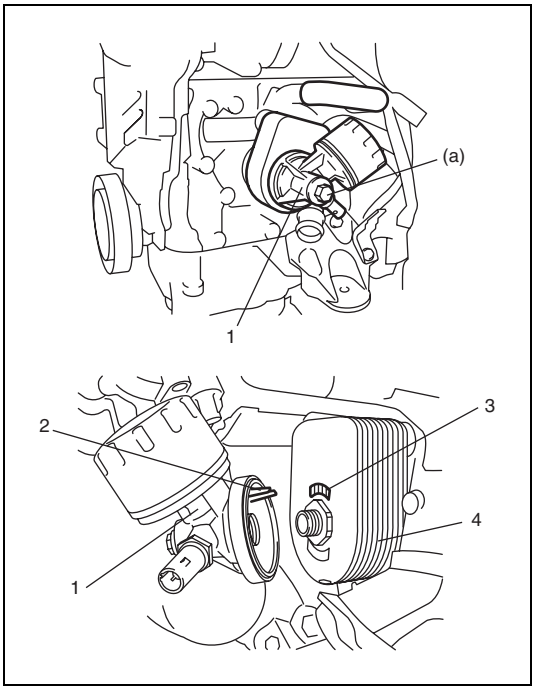

4) Install oil filter unit bracket (1) as shown in figure.

NOTE:

Be sure to align lug (2) of oil filter unit bracket (1) with hole (3) of heat exchanger (4).

Tightening torque
Oil filter unit bracket bolt (a): 45 N·m (4.5 kg-m, 32.5 lb-ft)

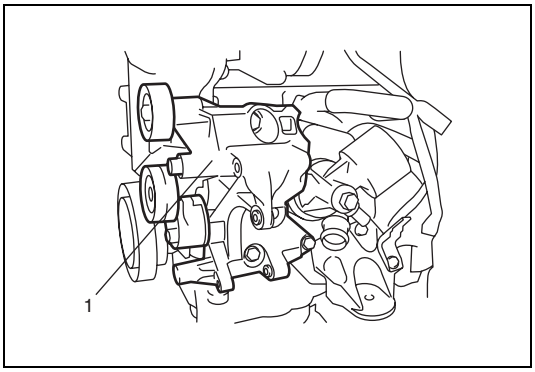

5) Install generator and compressor bracket (1) referring to "Generator Drive Belt Tensioner Components" in section 6H2.
6) Install compressor referring to "Compressor" in Section 1B.
7) Install generator referring to "Generator Dismounting and Remounting" in Section 6H2.

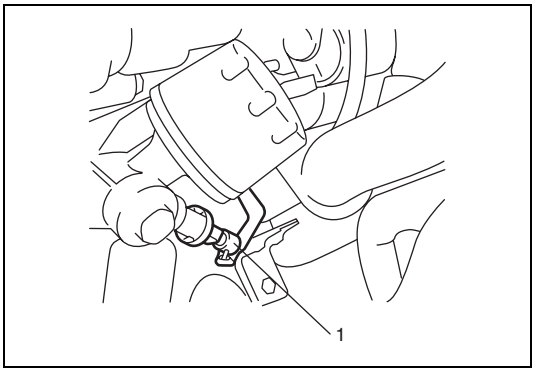

8) Connect oil pressure switch connector (1).
9) Install degassing tank to its bracket.
10) Refill engine coolant referring to "Coolant Replacement" in section 6B2.
11) Check engine oil level referring to "Engine Oil and Filter" in Section 0B.
12) Check to make sure that there is no oil leakage and coolant leakage at each connection.

EGR Valve and Intake Pipe Components

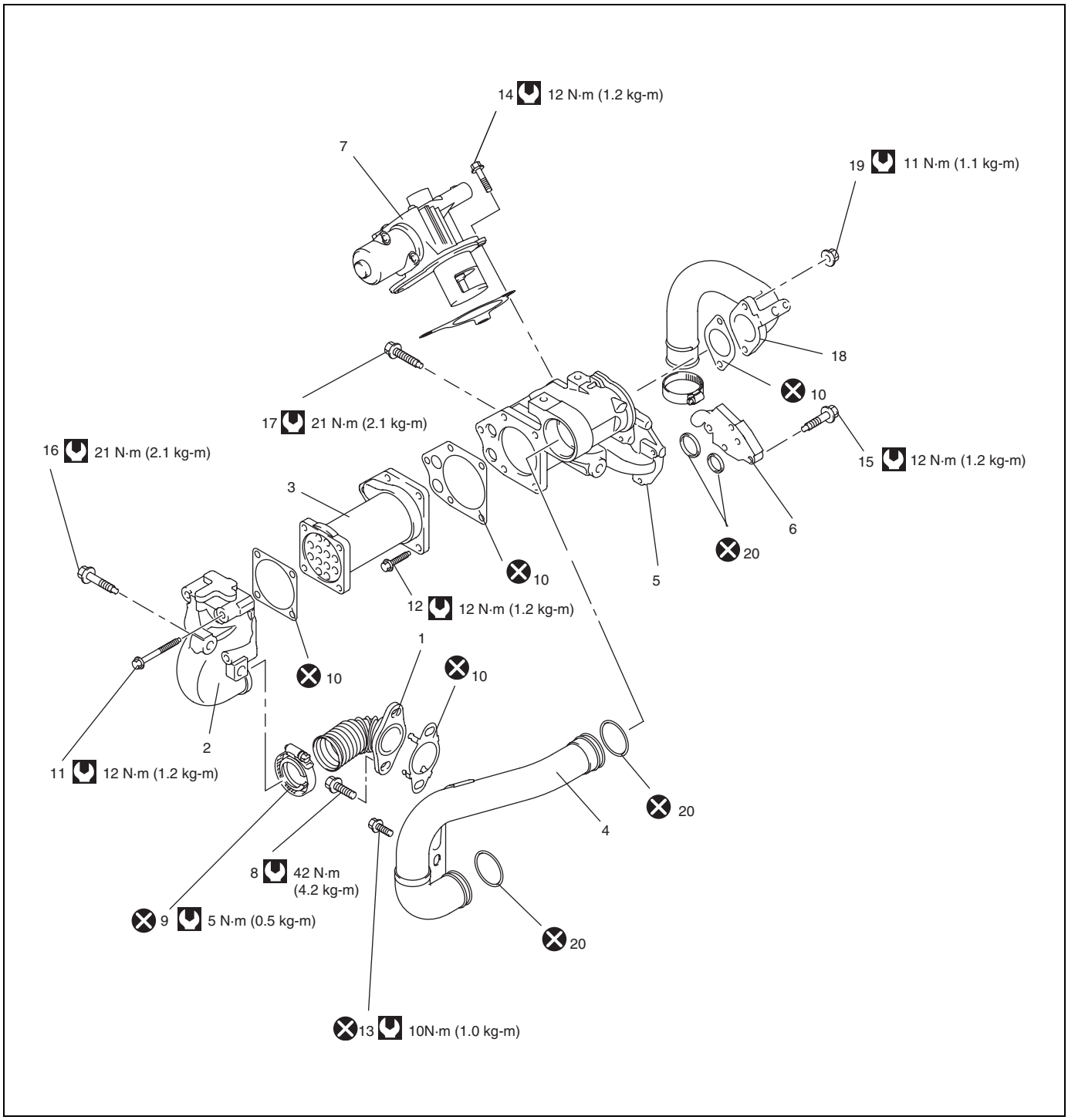

1. EGR pipe	9. EGR pipe clamp	17. EGR valve body bolt
2. EGR cooler pipe	10. Gasket	18. Intake pipe No.1
3. EGR cooler	11. EGR cooler pipe bolt	19. Intake No.1 nut
4. Intake pipe No.2	12. EGR cooler bolt	20. O-ring
5. EGR valve body	13. Intake pipe No.2 bolt	Tightening torque
6. EGR cooler water pipe	14. EGR valve bolt	Do not reuse.
7. EGR valve	15. EGR cooler water pipe bolt	
8. EGR pipe bolt	16. EGR cooler pipe bolt	

EGR Valve and Intake Pipe Removal and Installation

Removal

1) Disconnect negative (–) cable at battery.

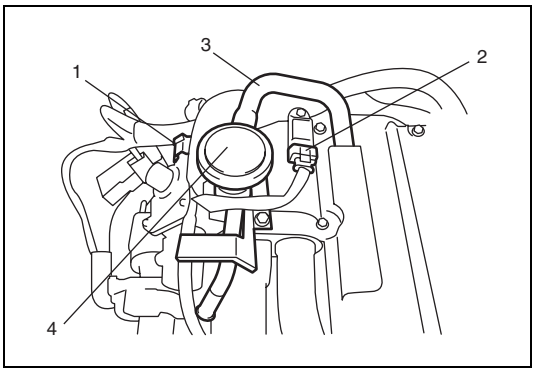

2) Disconnect EGR valve connector (1) and boost pressure sensor connector (2).
3) Disconnect hose (3) from oil vapor recirculation valve (4), and then remove oil vapor recirculation valve.

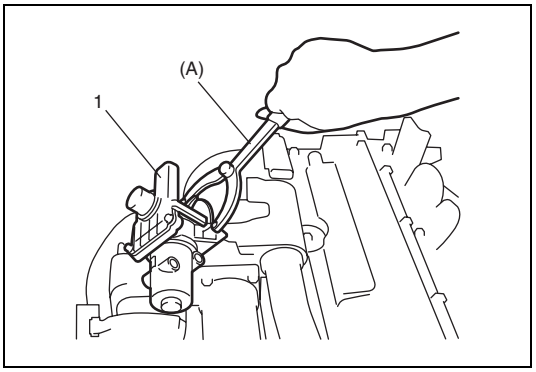

4) Remove EGR valve (1) with gasket using special tool.

Special tool
(A): 09916-48130

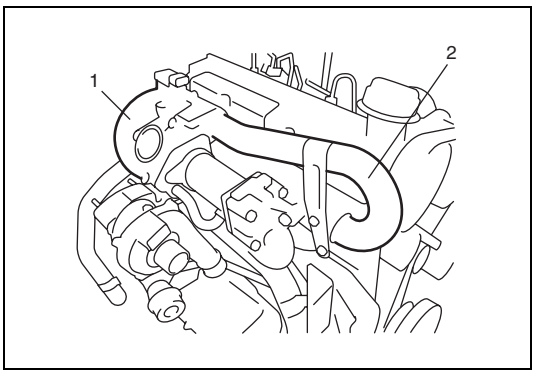

5) Remove intake pipe No.1 (1) and No.2 (2).

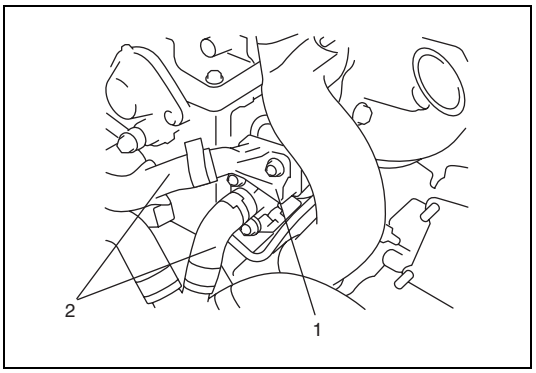

6) Disconnect hoses (2) from EGR cooler water pipe (1), and then remove EGR cooler water pipe.

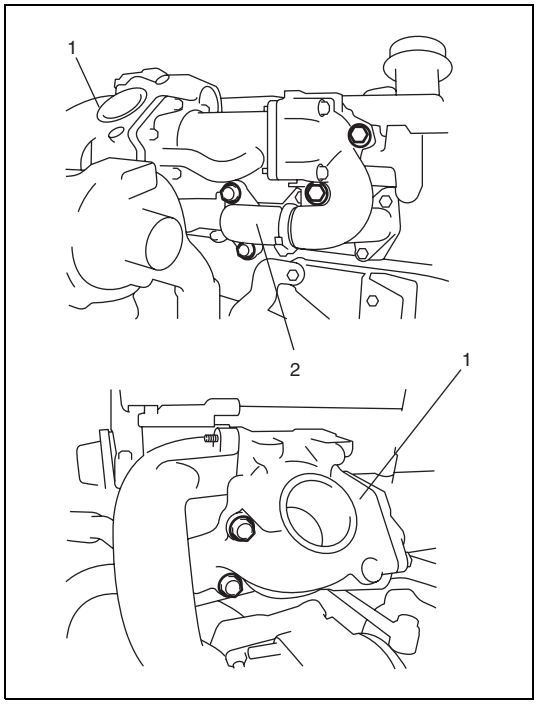

7) Remove EGR valve body (1) with EGR pipe (2).

Installation

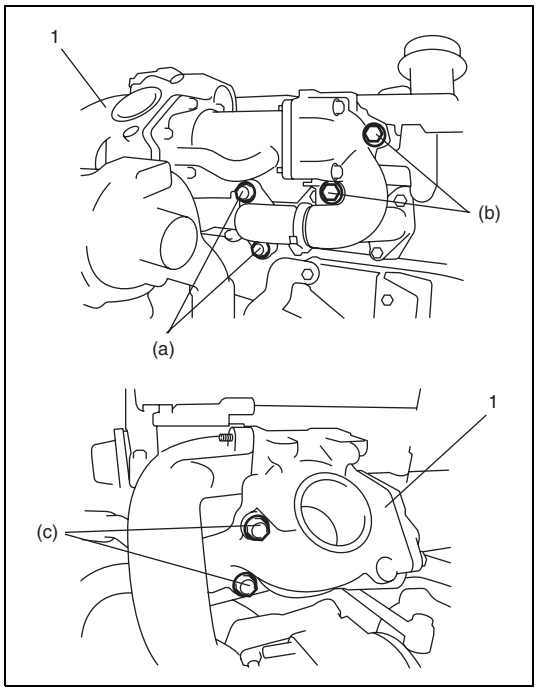

1) Install EGR valve body assembly (1) with new gasket and EGR pipe bolt.

Tightening torque
EGR pipe bolt (a): 42 N·m (4.2 kg-m, 30.5 lb-ft)
EGR cooler pipe bolt (b): 21 N·m (2.1 kg-m, 15.5 lb-ft)
EGR valve body bolt (c): 21 N·m (2.1 kg-m, 15.5 lb-ft)

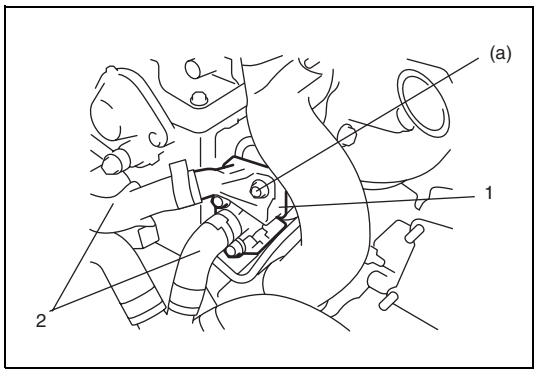

2) Install EGR cooler water pipe assembly (1), and then connect hoses (2) to EGR cooler water pipe assembly.

Tightening torque
EGR cooler water pipe assembly bolt (a):
12 N·m (1.2 kg-m, 9.0 lb-ft)

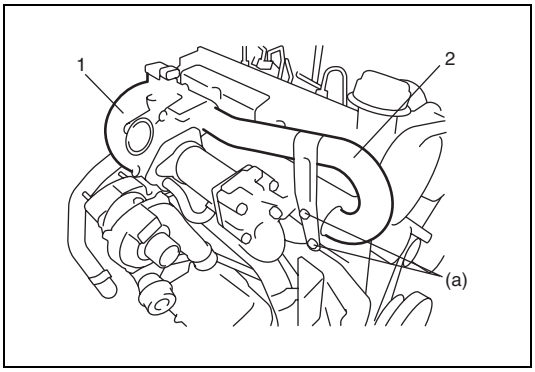

3) Install intake pipe No.1 with new gasket.

Tightening torque
Intake pipe No.1 nut: 11 N·m (1.1 kg-m, 8.0 lb-ft)

4) Apply engine oil to new O-ring, and install intake pipe No.2 (2) with new O-ring.

Tightening torque
Intake pipe No.2 bolt (a): 10 N·m (1.0 kg-m, 7.5 lb-ft)

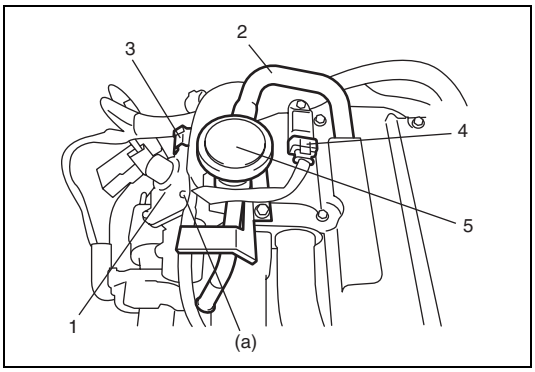

5) Install EGR valve (1) with new gasket.

Tightening torque
EGR valve bolt (a): 12 N·m (1.2 kg-m, 9.0 lb-ft)

6) Install oil vapor recirculation valve (5), and then connect hose (2) to oil vapor recirculation valve.
7) Connect EGR valve connector (3) and boost pressure sensor connector (4).
8) Connect negative (–) cable at battery.

EGR Valve Disassembly and Reassembly

Disassembly

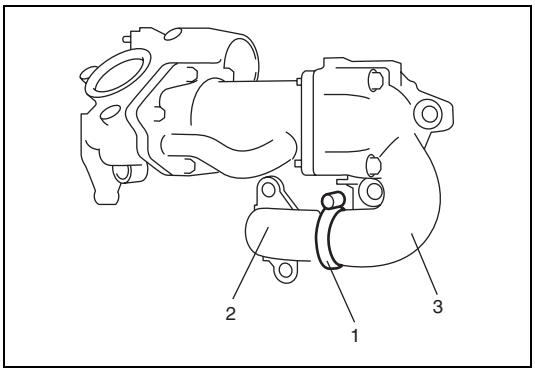

1) Remove clamp (1) and EGR pipe (2) from exhaust gas cooler pipe (3).

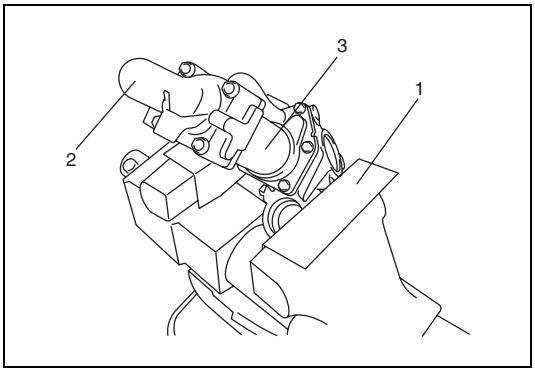

2) Hold EGR valve body with soft jawed vise (1), and remove exhaust gas cooler (2) with gasket.
3) Remove EGR cooler (3) with gasket.

Reassembly

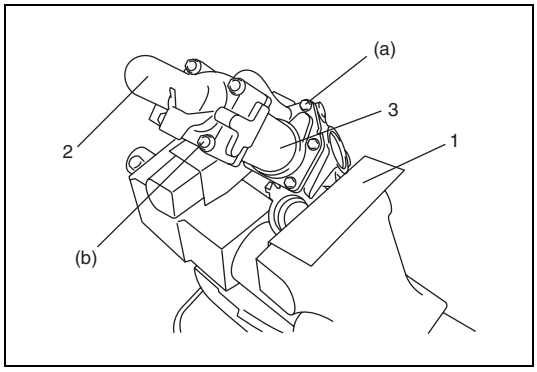

1) Hold EGR valve body with soft jawed vise (1), and install EGR cooler (3) with new gasket.
2) Install EGR cooler pipe (2) with new gasket.

Tightening torque
EGR cooler bolt (a): 12 N·m (1.2 kg-m, 9.0 lb-ft)
EGR cooler pipe bolt (b): 12 N·m (1.2 kg-m, 9.0 lb-ft)

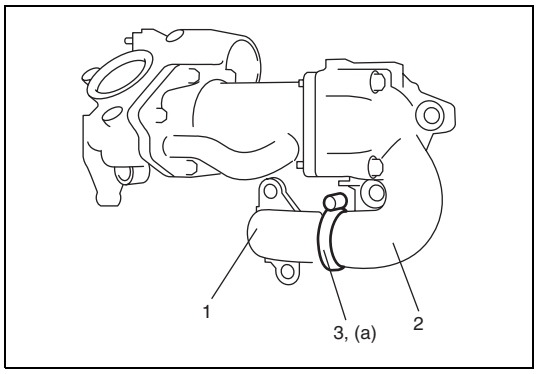

3) Install EGR pipe (1) to EGR cooler pipe (2), and then install EGR pipe clamp (3).

Tightening torque
EGR pipe clamp (a): 5 N·m (0.5 kg-m, 4.0 lb-ft)

EGR Valve and Intake Pipe Inspection

EGR valve body

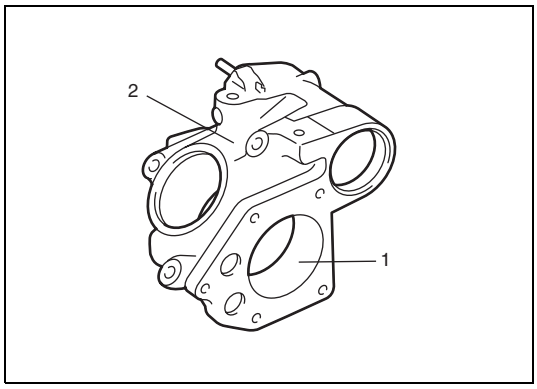

Check inside (1) of EGR valve body (2) for wear or damaged.

EGR valve

Refer to “EGR Valve Inspection” in Section 6E2.

Turbocharger Components

WARNING:

To avoid danger of being burned, do not service exhaust system while it is still hot. Service should be performed after system cools down.

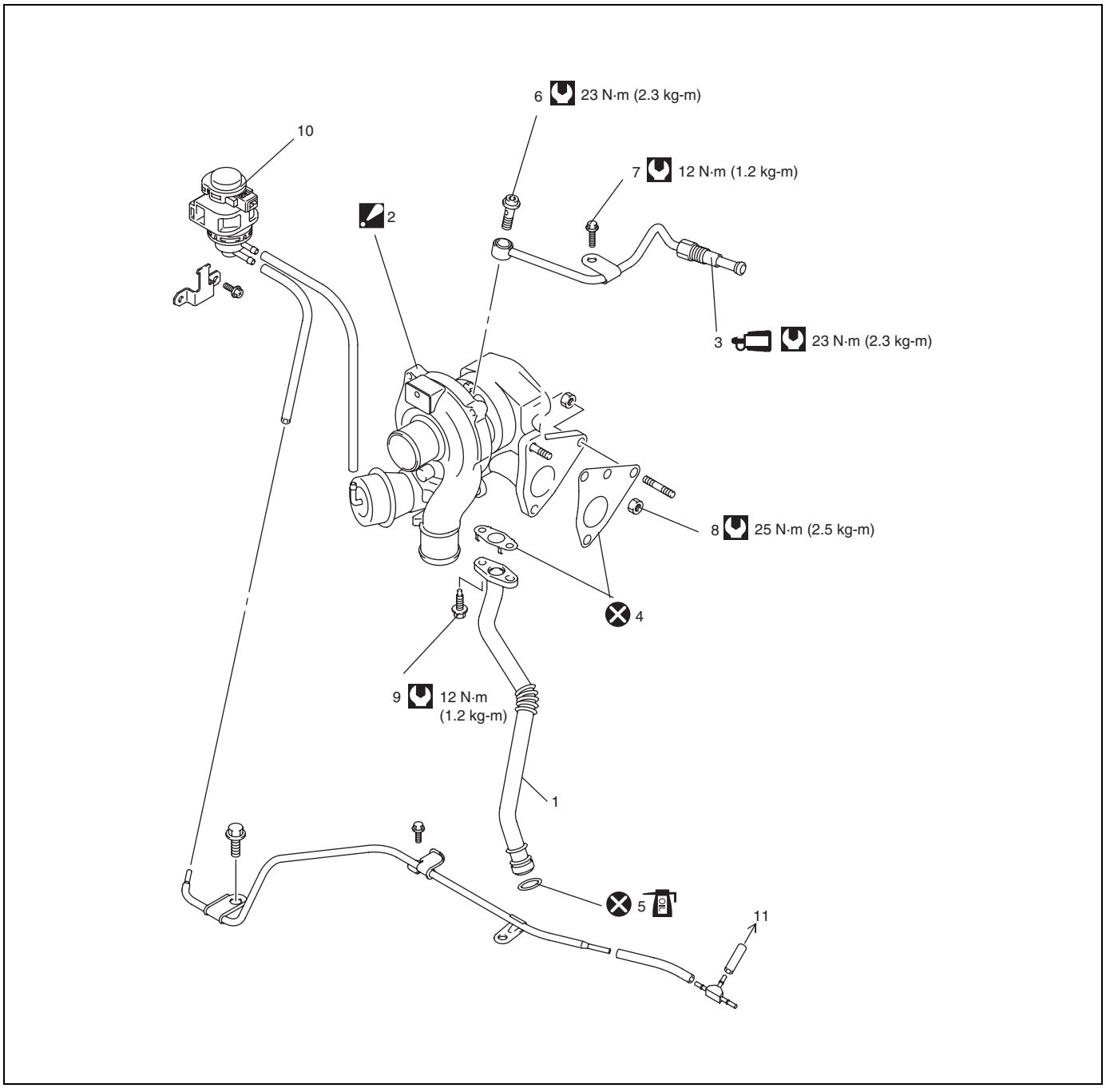

	1. Turbocharger oil return pipe	8. Turbocharger nut	
	2. Turbocharger Do not disassemble.	9. Turbocharger oil return bolt	
	3. Lubrication pipe : Apply thread lock LOCTITE FRENETANCH® to thread part.	10. Boost pressure control solenoid valve	
	4. Gasket	11. To vacuum pump	
	5. O-ring : Apply engine oil.		Tightening torque
	6. Lubrication pipe union bolt		Do not reuse.
	7. Lubrication pipe clamp bolt		

Turbocharger Removal and Installation

Removal

1) Disconnect negative (–) cable at battery.
2) Remove air cleaner assembly referring to “Air Cleaner Assembly Removal and Installation” in this section.
3) Remove EGR valve body referring to “EGR Valve and Intake Pipe Removal and Installation” in this section.

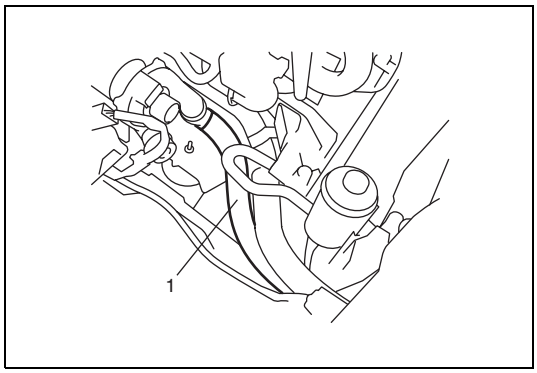

4) Disconnect intercooler inlet hose (1).
5) Remove exhaust pipe No.1 referring to “Exhaust System Components” in Section 6K2.

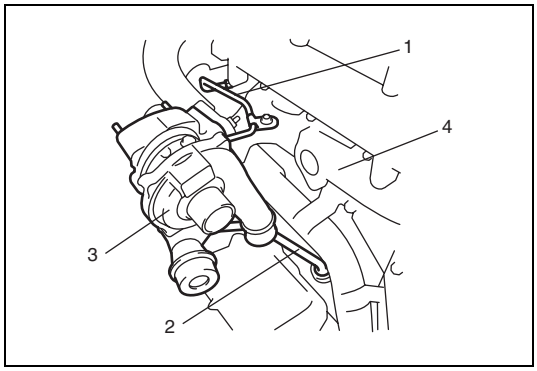

6) Remove lubrication pipe (1).
7) Disconnect turbocharger oil return pipe (2) from turbocharger.
8) Remove turbocharger assembly (3) from exhaust manifold (4), and then remove turbocharger oil return pipe (2) from cylinder block.

Installation

1) Clean mating surfaces of turbocharger, exhaust pipe No.1 and exhaust manifold.

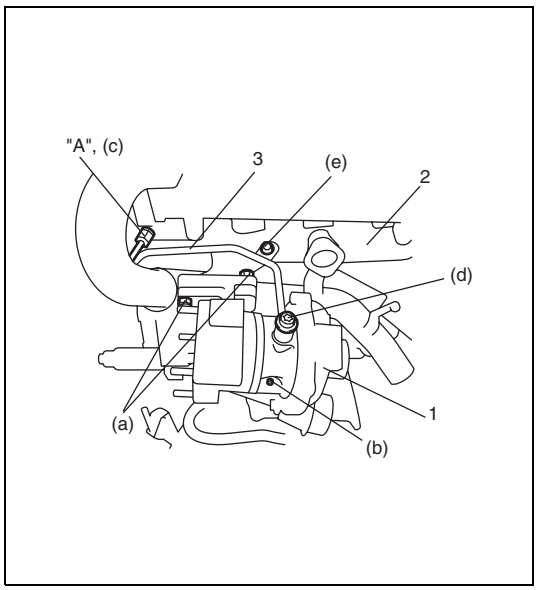

2) Apply engine oil to new O-ring, and install turbocharger oil return pipe with new O-ring to cylinder block.
3) Install turbocharger assembly (1) to exhaust manifold (2).
4) Apply thread lock cement to thread part of lubrication pipe (3), and then install it.

“A”: LOCTITLE FRENETANCH®

Tightening torque
Turbocharger nut (a): 25 N·m (2.5 kg-m, 18.0 lb-ft)
Turbocharger oil return pipe bolt (b):
12 N·m (1.2 kg-m, 9.0 lb-ft)
Lubrication pipe (c): 23 N·m (2.3 kg-m, 17.0 lb-ft)
Lubrication pipe union bolt (d):
23 N·m (2.3 kg-m, 17.0 lb-ft)
Lubrication pipe clamp bolt (e): 12 N·m (1.2 kg-m, 9.0 lb-ft)

5) Install exhaust pipe No.1 referring to “Exhaust System Components” in Section 6K2.

6) Connect intercooler inlet hose.
7) Install EGR valve body referring to “EGR Valve and Intake Pipe Removal and Installation” in this section.
8) Install air cleaner assembly referring to “Air Cleaner Assembly Removal and Installation” in this section.
9) Connect negative (–) cable to battery.
10) Using SUZUKI scan tool, cut fuel injection referring to “Operation Manual”.
11) Crank engine for 15 seconds in order to lubricate turbocharger.
12) Check to make sure that there is no oil leakage and exhaust gas leakage at each connection.

Turbocharger Inspection

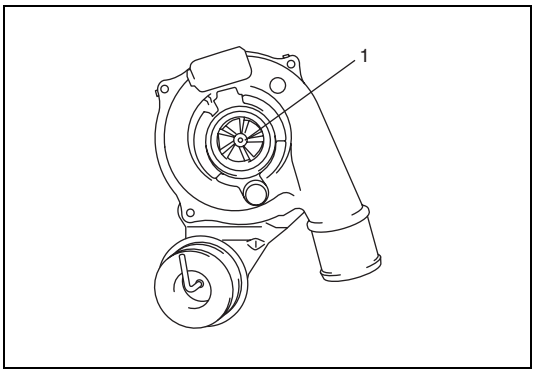

Rotate turbine shaft (1) by hand and verify that it turns smoothly without any abnormal noise and excessive runout.
If a malfunction is found, replace the turbocharger.

Exhaust Manifold Components

WARNING:
To avoid danger of being burned, do not service exhaust system while it is still hot. Service should be performed after system cools down.

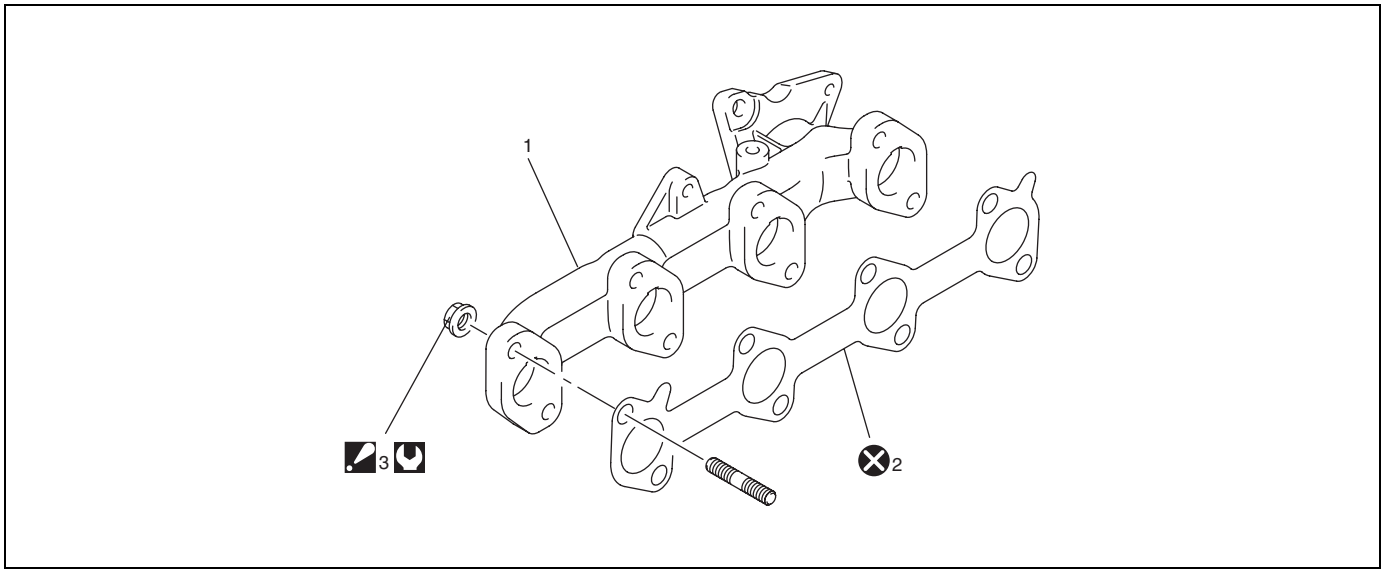

1. Exhaust manifold	3. Exhaust manifold nut : Tighten 26 N·m (2.6 kg-m, 19.0 lb-ft) by the specified procedure.	Do not reuse.
2. Exhaust manifold gasket	Tightening torque	

Exhaust Manifold Removal and Installation

WARNING:

To avoid danger of being burned, do not service exhaust system while it is still hot. Service should be performed after system cools down.

Removal

1) Disconnect negative (–) cable at battery.
2) Remove turbocharger assembly referring to "Turbocharger Removal and Installation" in this section.

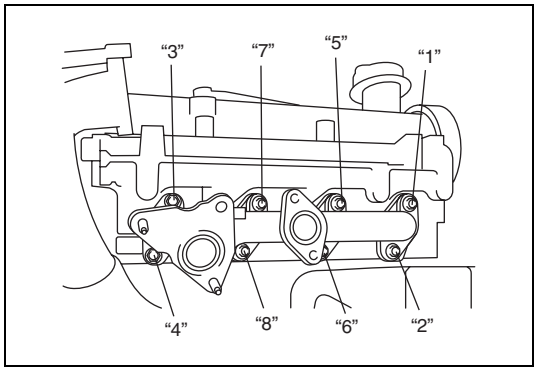

3) Loosen exhaust manifold nuts in numerical order ("1" to "8") evenly as indicated in the figure, and remove them.
4) Remove exhaust manifold (1) with gasket from cylinder head (2).

Installation

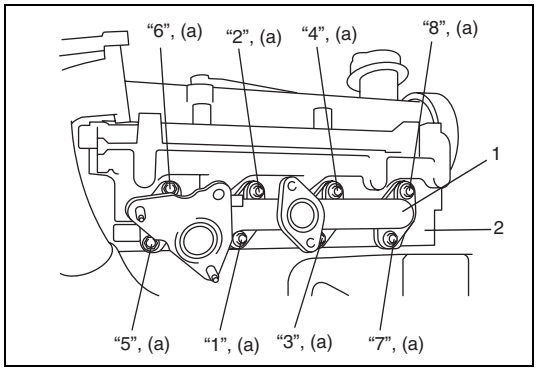

1) Install exhaust manifold (1) to cylinder head (2) as follows.
   a) Fit exhaust manifold to cylinder head with new gasket.
   b) Tighten exhaust manifold nuts temporarily by hand.
   c) Tighten exhaust manifold nuts specified torque by numerical order as shown in figure.

   Tightening torque
   Exhaust manifold nut (a):
   Tighten 26 N·m (2.6 kg-m, 19.0 lb-ft) by the specified procedure

2) Install turbocharger assembly referring to "Turbocharger Removal and Installation" in this section.
3) Connect negative (–) cable at battery.
4) Check to make sure that there is no oil leakage and exhaust gas leakage at each connection.

Oil Pan and Oil Pump Strainer Components

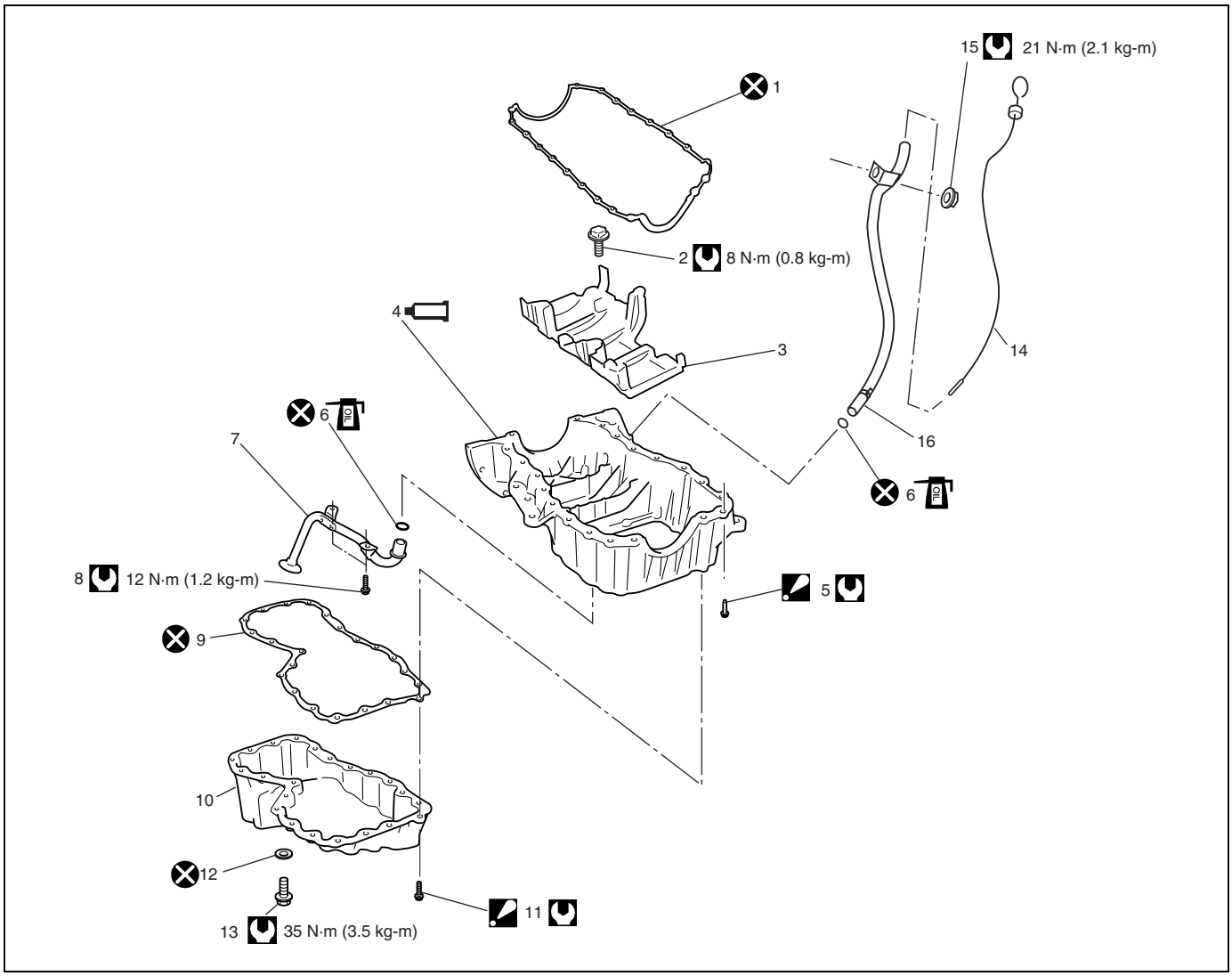

	1. Upper oil pan gasket	7. Oil pump strainer	13. Engine oil drain plug
	2. Oil pan baffle plate bolt	8. Oil pump strainer bolt	14. Level gauge
	3. Oil pan baffle plate	9. Lower oil pan gasket	15. Level gauge tube nut
	4. Upper oil pan : Apply RHODORSEAL 5661® referring to “Installation” under “Oil Pan and Oil Pump Strainer Removal and Installation”.	10. Lower oil pan	16. Level gauge tube
	5. Upper oil pan bolt : Tighten 6 N·m (0.6 kg-m, 4.5 lb-ft) and 16 N·m (1.6 kg-m, 12.0 lb-ft) by the specified procedure.	11. Lower oil pan bolt : Tighten 12 N·m (1.2 kg-m, 9.0 lb-ft) by the specified procedure.	Tightening torque
	6. O-ring : Apply engine oil.	12. Engine oil drain plug gasket	Do not reuse.

Oil Pan and Oil Pump Strainer Removal and Installation

Removal

1) Disconnect negative (–) cable at battery.
2) Drain engine oil referring to “Engine Oil and Filter Change” in Section 0B.
3) Remove engine hood after disconnecting windshield washer hose.
4) Remove oil level gauge.
5) Remove clutch operating cylinder referring to “Transmission Dismounting and Remounting” in Section 7A2.

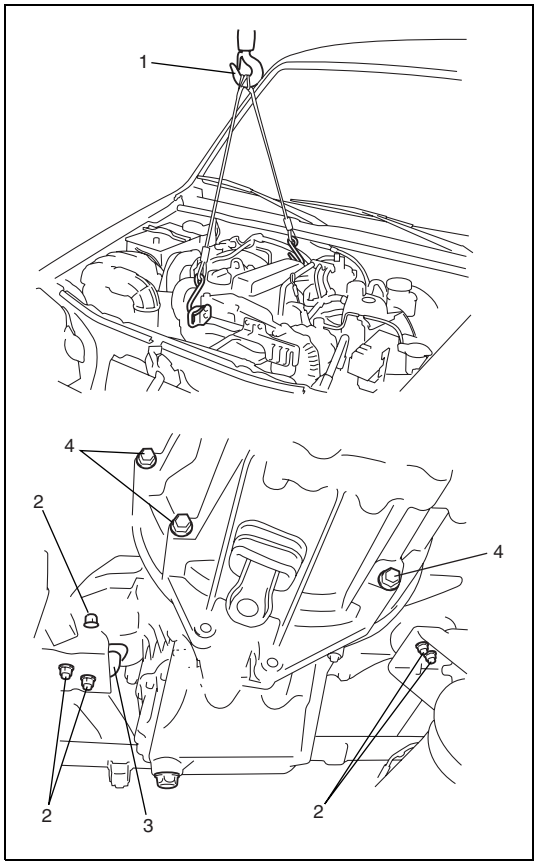

6) To facilitate and ensure removal of oil pan, increase clearance between engine and vehicle body according to the following procedures.
   a) Install lifting device (1).
   b) Remove engine mounting nuts (2).
   c) Hoist engine 15 – 20 mm (0.6 – 0.8 in.).

CAUTION:

Do not hoist engine more than instructed above. That may cause trouble to engine or transmission.

   d) Remove engine left mounting (3).
7) Remove transmission to engine bolts (4).

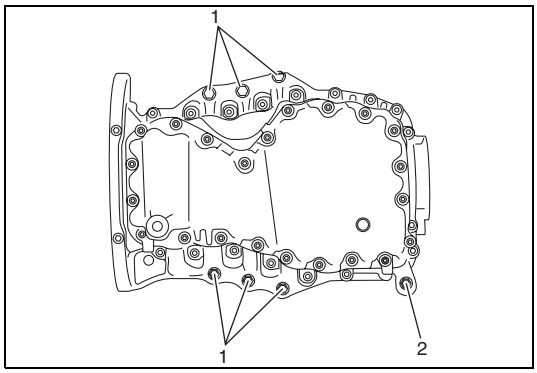

8) Remove engine mounting bracket bolts (1).
9) Remove accessory bracket bolt (2).

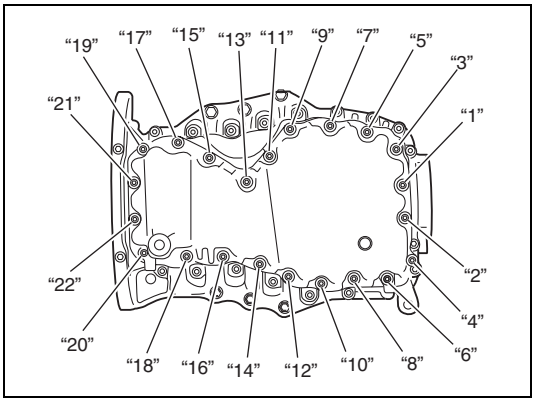

10) Loosen lower oil pan bolts in numerical order ("1" to "22") as shown in figure, and remove them.
11) Remove lower oil pan from upper oil pan.

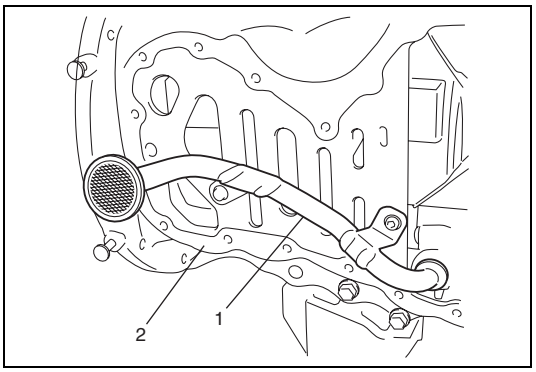

12) Remove oil pump strainer (1) from upper oil pan (2).

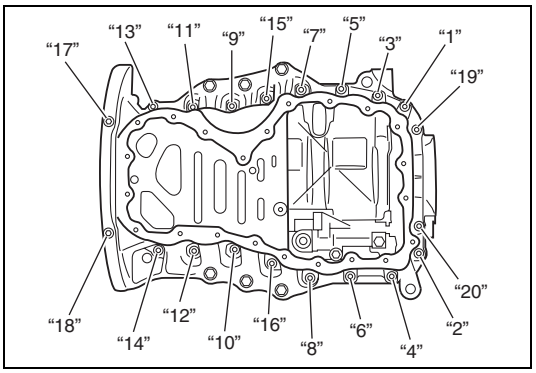

13) Loosen upper oil pan bolts in numerical order ("1" to "20") as shown in figure, and remove them.
14) Remove upper oil pan from cylinder block.

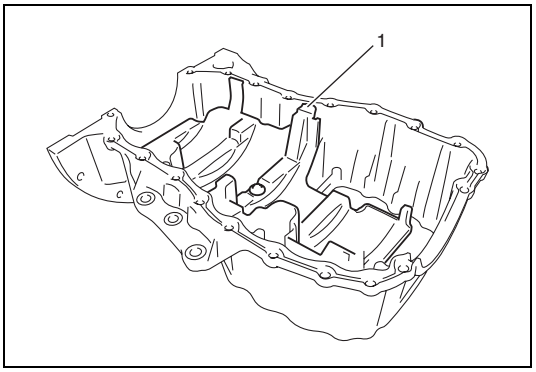

15) Remove oil pan baffle plate (1) from upper oil pan.

Installation

1) Clean sealing surfaces on cylinder block, upper oil pan and lower oil pan.

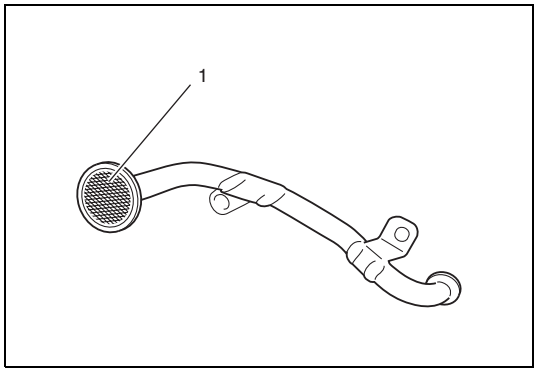

2) Clean Inside of oil pan and oil pump strainer screen (1).

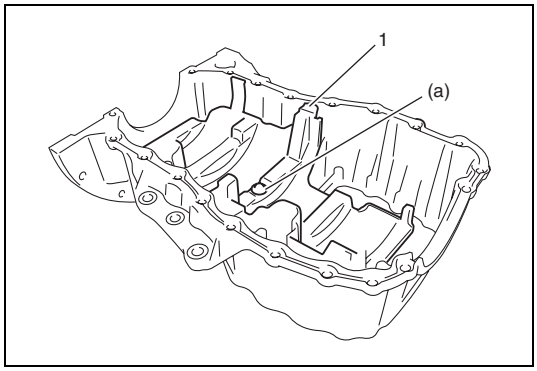

3) Install oil pan baffle plate to upper oil pan.

Tightening torque
Oil pan baffle plate bolt (a): 8 N·m (0.8 kg-m, 6.0 lb-ft)

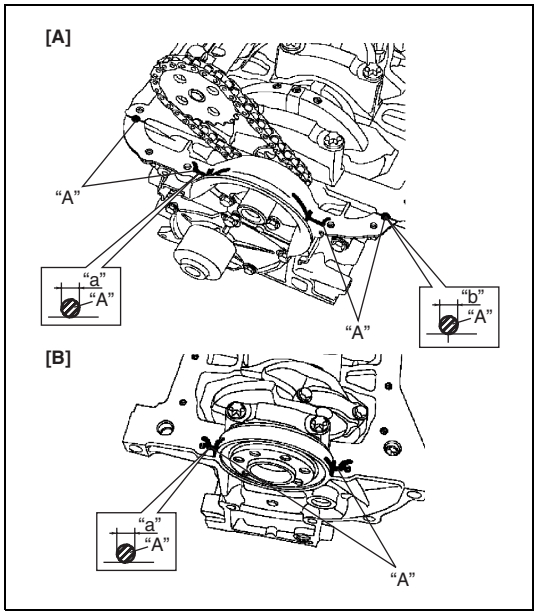

4) Apply sealant "A" to cylinder block and gasket holder sealing surface area as shown in the figure.

"A": RHODORSEAL 5661®

[A]:	Crankshaft pulley side
[B]:	Flywheel side
"a":	5 mm (0.20 in.)
"b":	7 mm (0.27 in.)

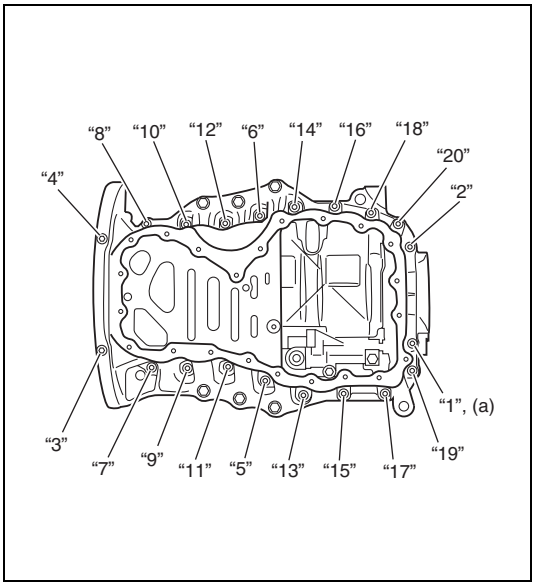

5) Install upper oil pan to cylinder block as follows.
   a) Fit upper oil pan to cylinder block with new gasket.
   b) Tighten upper oil pan bolts temporarily by hand.
   c) Tighten upper oil pan bolts ("1" to "8") to 6 N·m (0.6 kg-m, 4.5 lb-ft) according to numerical order in figure.
   d) Tighten upper oil pan bolts ("1" to "8") to 16 N·m (1.6 kg-m, 12.0 lb-ft) by numerical order as shown in figure.
   e) Tighten upper oil pan bolts ("9" to "20") to 6 N·m (0.6 kg-m, 4.5 lb-ft) according to numerical order in figure.
   f) Tighten upper oil pan bolts ("9" to "20") to 16 N·m (1.6 kg-m, 12.0 lb-ft) by numerical order as shown in figure.

Tightening torque
Upper oil pan bolt (a):
Tighten 6 N·m (0.6 kg-m, 4.5 lb-ft) and 16 N·m (1.6 kg-m, 12.0 lb-ft) by the specified procedure

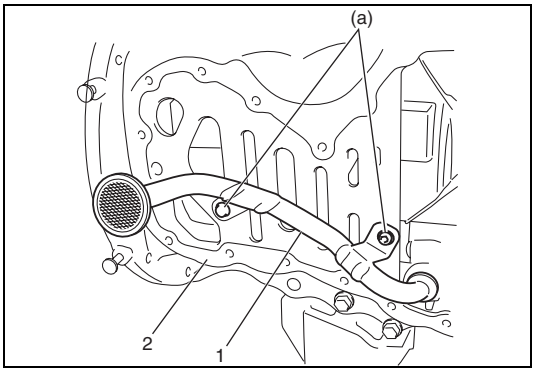

6) Apply engine oil to O-ring, and install oil pump strainer (1) to upper oil pan (2) with new O-ring.

Tightening torque
Oil pump strainer bolt (a): 12 N·m (1.2 kg-m, 9.0 lb-ft)

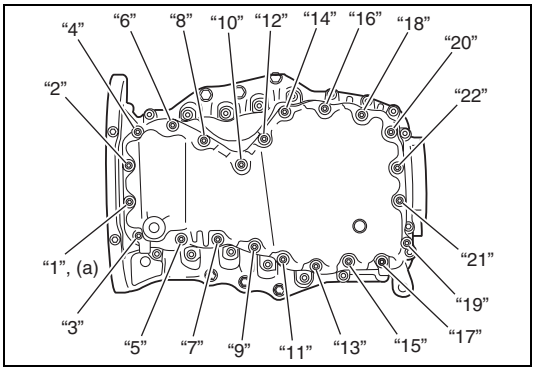

7) Install lower oil pan to upper oil pan as follows.
   a) Fit lower oil pan (1) to upper oil pan.
   b) Tighten lower oil pan bolts temporarily by hand.
   c) Tighten lower oil pan bolts to specified torque by numerical order as shown in figure.

Tightening torque
Lower oil pan bolt (a):
Tighten12 N·m (1.2 kg-m, 9.0 lb-ft) by the specified procedure

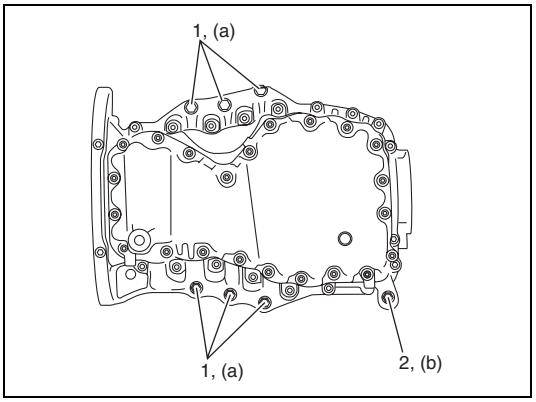

8) Install engine mounting bracket bolts (1).

Tightening torque
Engine mounting bracket bolt (a):
40 N·m (4.0 kg-m, 29.0 lb-ft)

9) Install accessory bracket bolt (2).

Tightening torque
Accessory bracket bolt (b):
28 N·m (2.8 kg-m, 20.5 lb-ft)

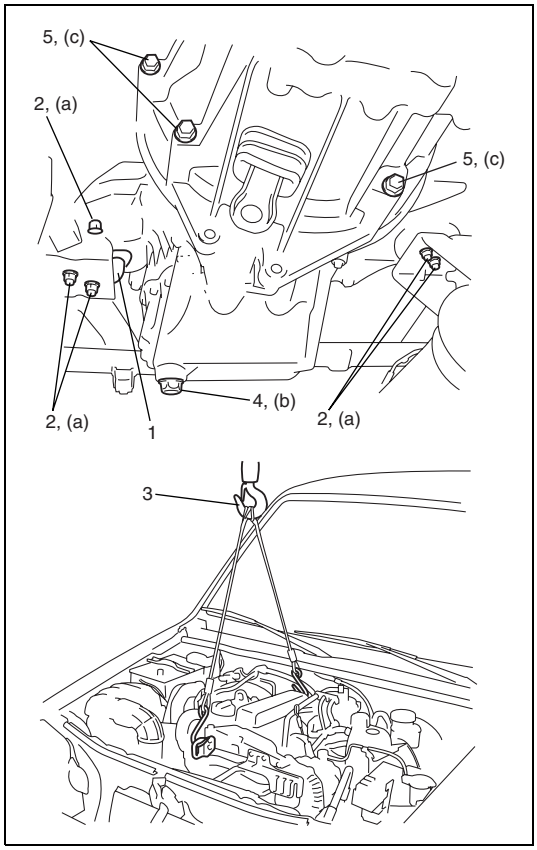

10) Install engine to vehicle as follows.
    a) Install engine left mounting (1).
    b) Lower engine.
    c) Tighten engine mounting nuts (2) to specified torque.

    Tightening torque
    Engine mounting nut (a):
    55 N·m (5.5 kg-m, 40.0 lb-ft)

    d) Remove lifting device (3).
11) Install drain plug (4) to oil pan with new gasket.

    Tightening torque
    Engine oil drain plug (b): 35 N·m (3.5 kg-m, 25.5 lb-ft)

12) Install transmission to engine bolts (5).

    Tightening torque
    Transmission to engine bolt (c):
    55 N·m (5.5 kg-m, 40.0 lb-ft)

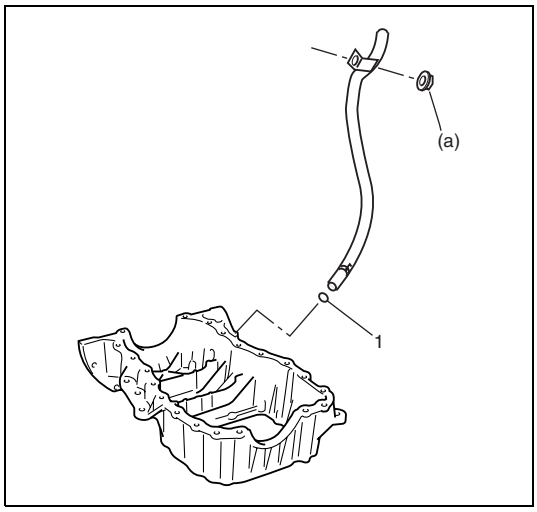

13) Apply engine oil to O-ring (1), and install oil level gauge with new O-ring.

    Tightening torque
    Level gauge tube nut (a): 21 N·m (2.1 kg-m, 15.5 lb-ft)

14) Install clutch operating cylinder referring to “Clutch Operating Cylinder Removal and Installation” in Section 7C2.
15) Refill engine oil referring to “Engine Oil and Filter” in Section 0B.
16) Connect negative (–) cable at battery.
17) Check to make sure that there is no oil leakage at each connection.

Engine Assembly Removal and Installation

Removal

1) Disconnect positive (+) and negative (–) cables at battery.
2) Remove engine hood after disconnecting windshield washer hose.
3) Remove air cleaner hose.
4) Remove boost pressure control solenoid valve referring to “Boost Pressure Control Solenoid Valve Removal and Installation” in Section 6E2.
5) Remove radiator referring to “Radiator Removal and Installation” in Section 6B2.
6) Detach main fuse/relay box from its bracket.
7) Remove degassing tank.

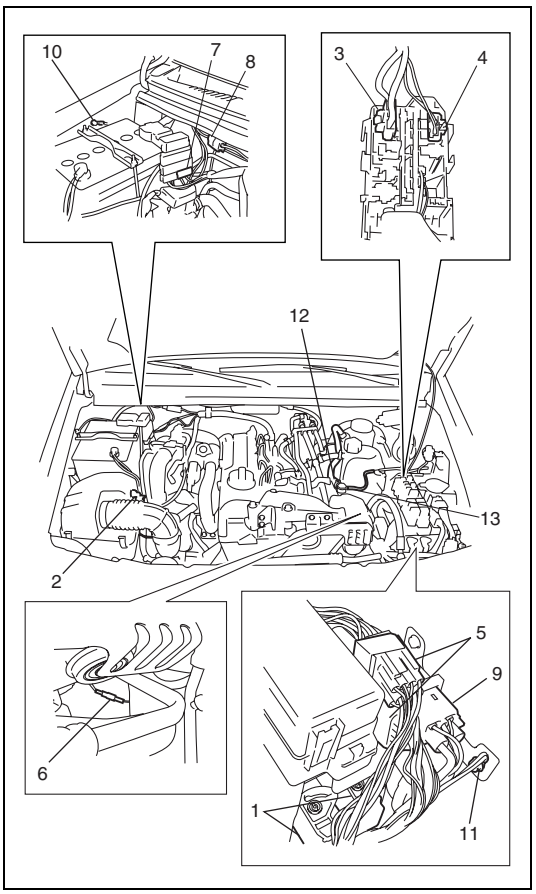

8) Remove fuel filter referring to “Fuel Filter Removal and Installation” in Section 6C2.
9) Disconnect discharge hose pipe from A/C compressor referring to “Major Components and Location” in section 1B.
10) Remove transmission referring to “Transmission Dismounting and Remounting” in Section 7A2.
11) Remove starting motor referring to “Starting Motor Dismounting and Remounting” in Section 6G2.
12) Disconnect the following electric wires, and then release wire harnesses from clamps.
    - ECM connectors (1)
    - MAF and IAT sensor connector (2)
    - Main fuse box connectors (3 and 4)
    - Engine harness to main harness connector (5)
    - Magnet clutch connector (6) of A/C compressor
    - Supplementary fuse box connector (7)
    - Battery to main harness connector (8)
    - Pre-heating unit connector (9)
    - Ground terminals (10 and 11)
13) Disconnect the following hoses.
    - Brake booster hose (12) and air lock hub hose (13) from vacuum pump
    - Heater inlet hose No. 1 from thermo plunger
    - Radiator inlet hose No.1 from thermostat assembly
    - Heater outlet hose from heater joint
14) With hose connected, detach power steering pump from its bracket.
15) Drain engine oil, if necessary.

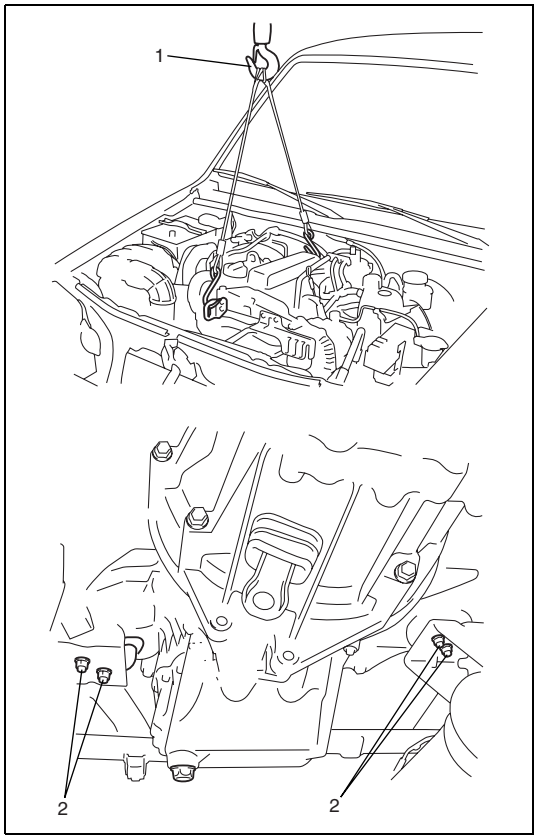

16) Install lifting device (1).
17) Remove engine mounting nuts (2).
18) Before lifting engine, check to ensure all hoses, electric wires and cables are disconnected from engine.
19) Remove engine assembly from vehicle.

Installation

CAUTION:

Before installing intake air pressure sensor hose, degrease connect part of hose and intercooler outlet hose. Otherwise hose may become detached and cause turbo system failure.

Reverse removal procedure for installation noting the following.

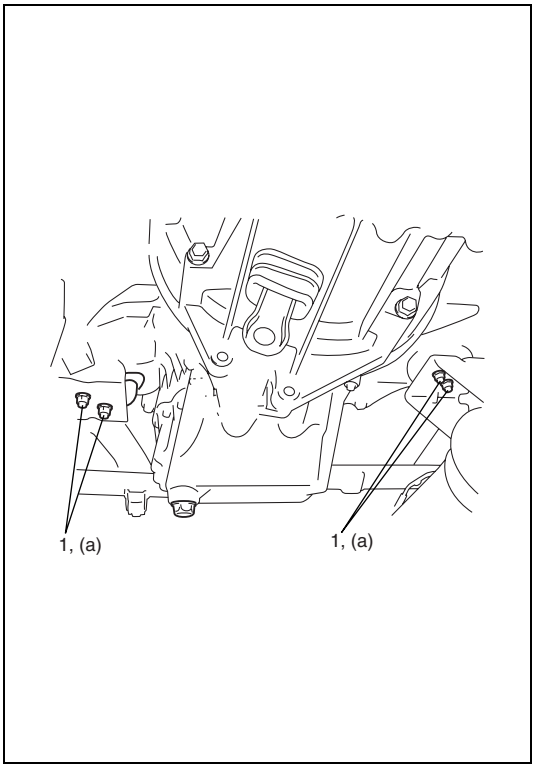

- Tighten engine mounting nuts (1) to specified torque.

Tightening torque
Engine mounting nut (a):
55 N·m (5.5 kg-m, 40.0 lb-ft)

- Install transmission assembly referring to “Transmission Dismounting and Remounting” in Section 7A2.
- Check to ensure that all removed parts are back in place. Reinstall any necessary parts which have not been reinstalled.
- Refill engine oil referring to “Engine Oil and Filter” in Section 0B.
- Refill cooling system referring to “Coolant Replacement” in Section 6B2.
- After connecting discharge hose pipe to A/C compressor, charge A/C system referring to “Charging Procedure” in Section 1B.
- Check to make sure that there is no fuel leakage, oil leakage, coolant leakage, refrigerant and exhaust gas leakage at each connection.

Timing Belt and Belt Tensioner Components

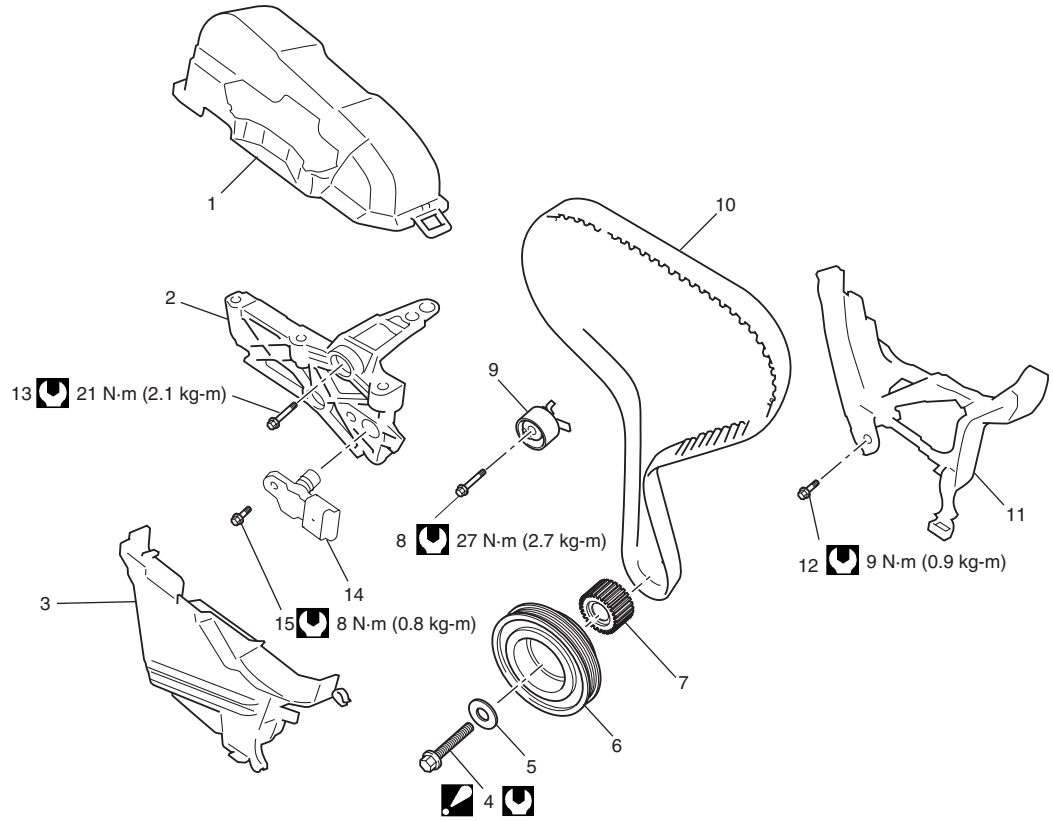

	1.	Timing belt upper cover	7.	Timing belt pulley	13. Generator upper bracket support bolt
	2.	Generator upper bracket support	8.	Timing belt tensioner bolt	14. CMP sensor
	3.	Timing belt lower cover	9.	Timing belt tensioner	15. CMP sensor bolt
◢	4.	Crankshaft pulley bolt : Tighten 120 N·m (12.0 kg-m, 87 lb-ft) and 95° by the specified procedure.	10.	Timing belt	Tightening torque
	5.	Washer	11.	Timing belt inner cover	
	6.	Crankshaft pulley	12.	Timing belt inner cover bolt	

Timing Belt and Belt Tensioner Removal and Installation

Removal

1) Remove engine assembly from vehicle referring to “Engine Assembly Removal and Installation” in this section.

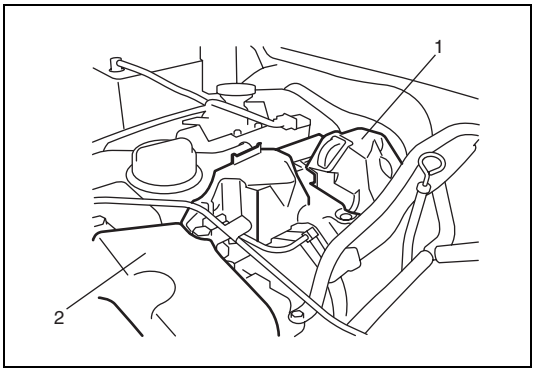

2) Remove injector cover (1) and generator upper bracket (2).

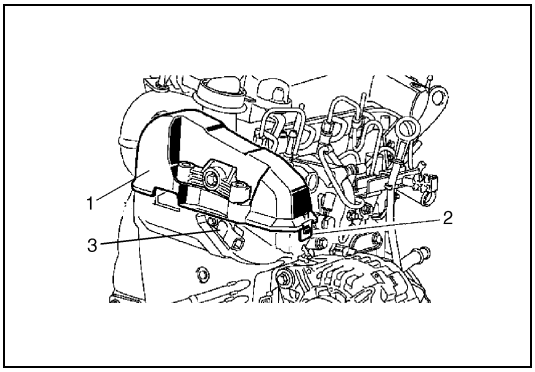

3) Remove timing belt upper cover (1) after unhooking its tabs (2).
4) Remove CMP sensor (3).

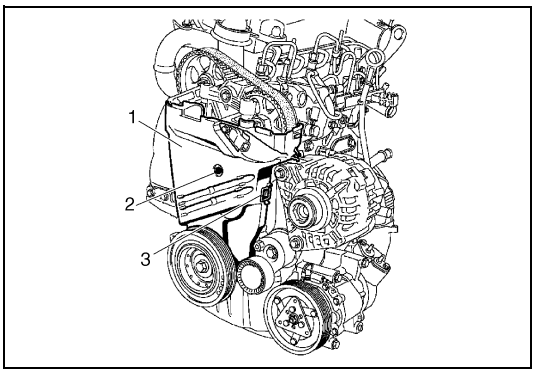

5) Remove timing belt lower cover (1) after unhooking its tabs (3) and removing its plastic bolt (2).

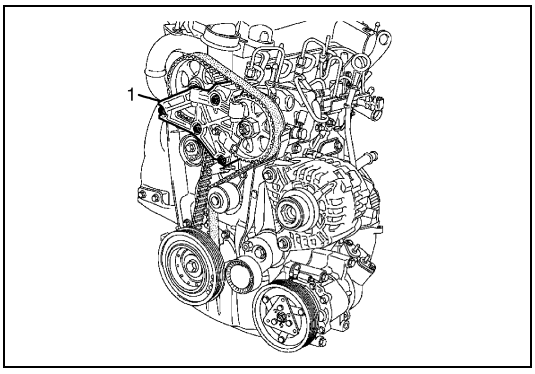

6) Remove generator upper bracket support (1) from cylinder head.

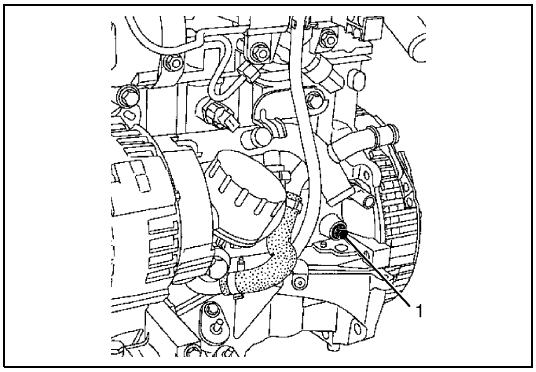

7) Remove TDC pin cap (1).

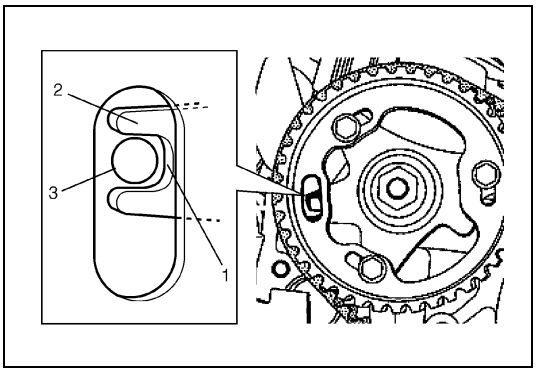

8) Turn crankshaft pulley clockwise, and stop it just before aligning slit (1) of camshaft pulley hub (2) matches with hole (3) of cylinder head.

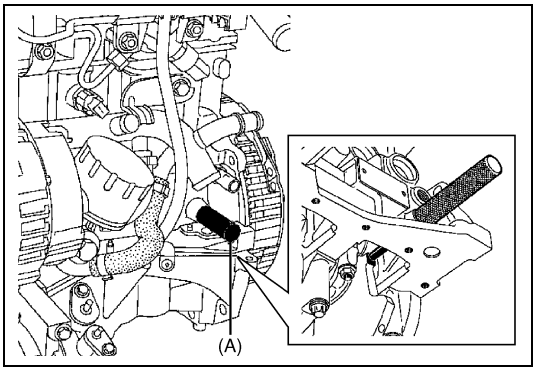

9) Insert special tool (A) into TDC pin hole as shown in figure.

Special tool
(A): 09919-58110

10) Turn crankshaft pulley clockwise until crankshaft touches special tool (A).

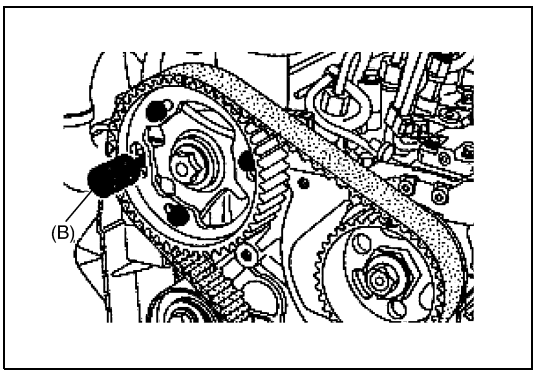

11) Check that special tool (B) inserts holes of camshaft pulley hub and cylinder head smoothly.

Special tool
(B): 09919-58120

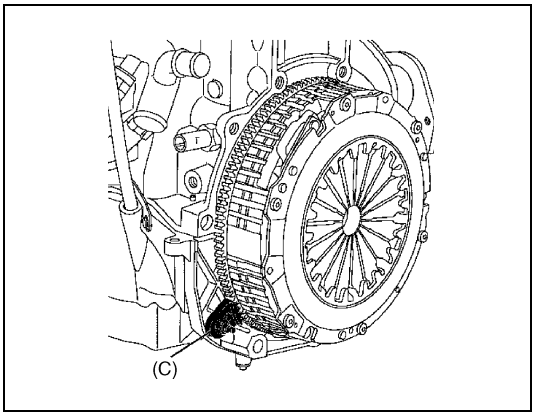

12) Loosen crankshaft pulley bolt as follows.
   a) Lock flywheel using special tool (C).

Special tool
(C): 09916-98110

   b) Remove special tools (A) and (B).
   c) Loosen crankshaft pulley bolt, and remove crank shaft pulley.
   d) Remove special tool (C).
   e) Insert special tools (A) and (B) to removed positions at step b).

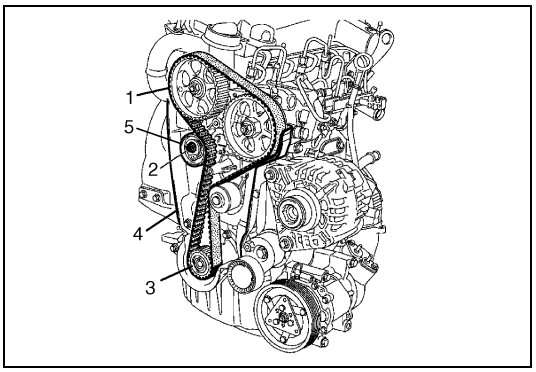

13) Loosen timing belt tensioner bolt (2).
14) Remove timing belt (1).
15) Remove timing belt tensioner (5), timing belt pulley and timing belt inner cover (4), if necessary.

Installation

1) Clean mating surface of oil pump pulley, crankshaft timing belt pulley and crankshaft accessory belt pulley.

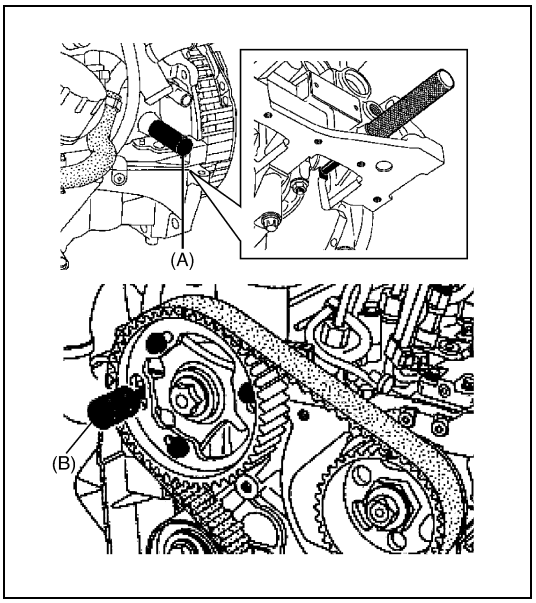

2) Confirm that special tool (A) and (B) is installed to cylinder block and cylinder head. If special tool(s) is removed, install special tool(s) referring to “Pistons, Piston Rings, Connecting Rods and Cylinders Removal and Installation” in this section or “Camshaft and Tappet Removal and Installation” in this section.

Special tool
(A): 09919-58110
(B): 09919-58120

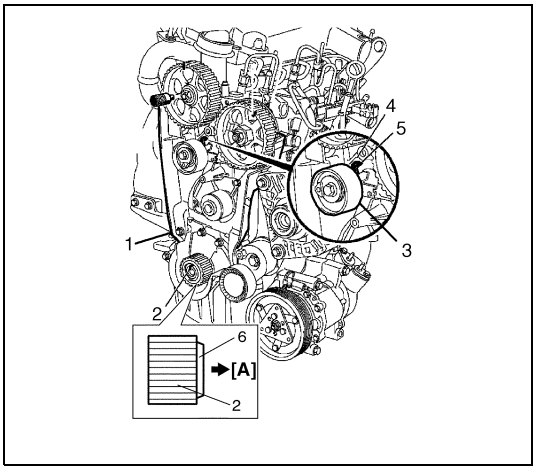

3) Install timing belt inner cover (1), timing belt pulley (2) and timing belt tensioner (3), if necessary.

CAUTION:
Install timing belt pulley so that boss side (6) may come to the gasket holder plate side.

NOTE:
Be sure to position peg (5) of timing belt tensioner (3) to groove (4) of cylinder block precisely.

[A]: Gasket holder plate side

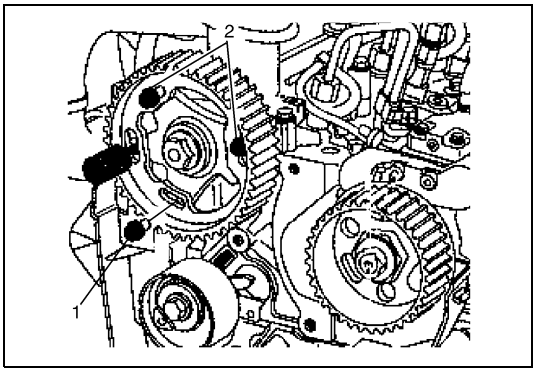

4) Remove one camshaft pulley bolt (1), and loosen the other two bolts (2) by one turn.

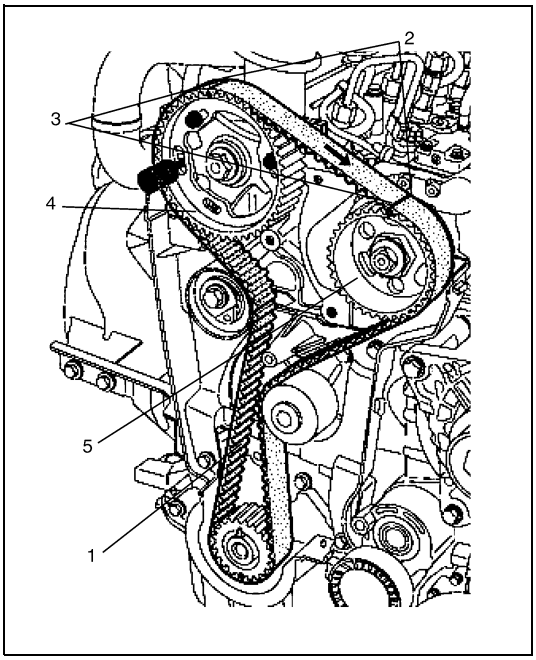

5) Install timing belt (1) with aligning its matching lines (2) with matching marks (3) of camshaft gear ring (4) and injection pump pulley (5).

NOTE:
- **Match arrow mark on timing belt with rotating direction of camshaft.**
- **Timing belt has 18 teeth between its matching lines.**

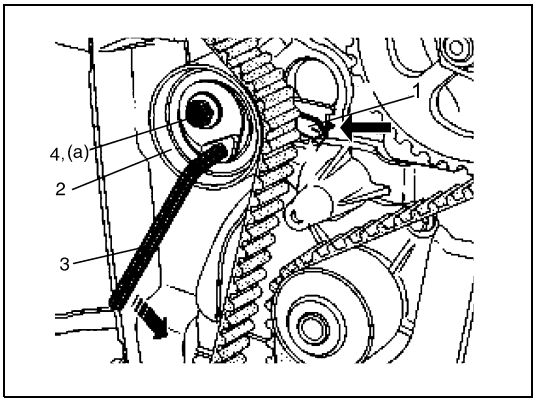

6) Using hexagon wrench (3), align movable index (1) of timing belt tensioner (2) to specified position as shown in figure by turning timing belt tensioner counterclockwise. And then, tighten timing belt tensioner bolt (4) to specified torque.

Tightening torque
Timing belt tensioner bolt (a): 27 N·m (2.7 kg-m, 19.5 lb-ft)

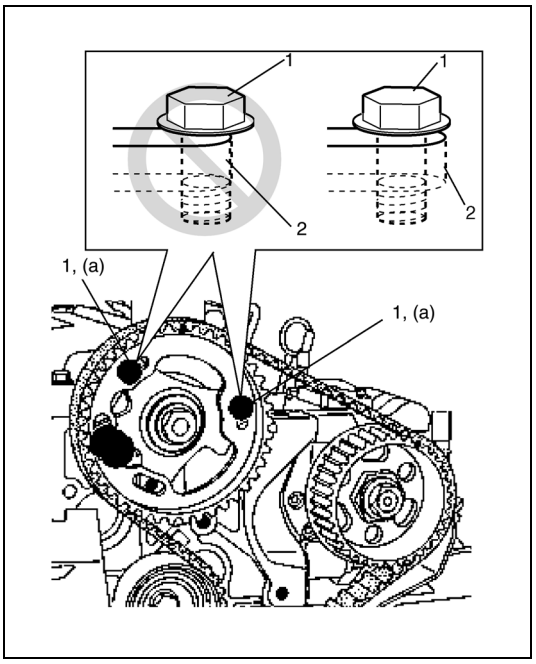

7) Check that camshaft pulley bolts (1) do not touch long slotted end (2).
8) Install removed camshaft pulley bolt, and tighten all camshaft pulley bolts to specified torque.

Tightening torque
Camshaft pulley bolt (a): 14 N·m (1.4 kg-m, 10.5 lb-ft)

9) Remove special tools (A) and (B).
10) Install crankshaft pulley bolt with washer temporarily.

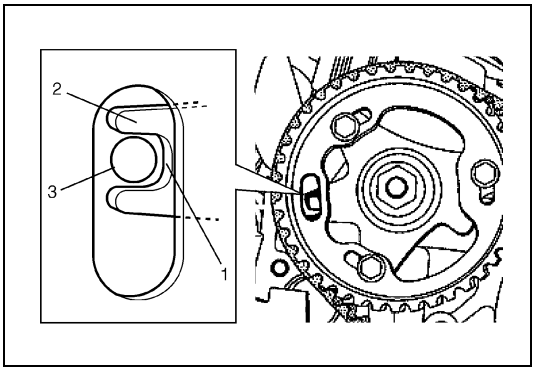

11) Turn crankshaft two revolutions clockwise, and stop it just before aligning slit (1) of camshaft pulley hub (2) matches with hole (3) of cylinder head.

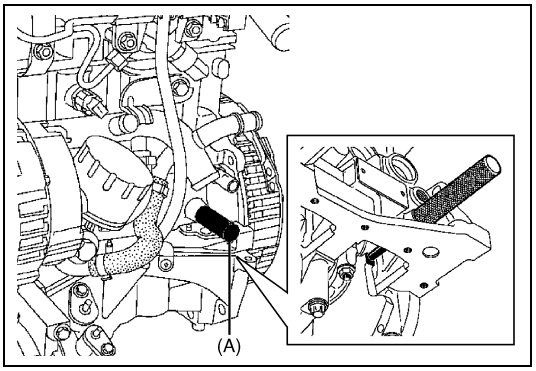

12) Insert special tool (A) into TDC pin hole as shown in figure.

Special tool
(A): 09919-58110

13) Turn crankshaft pulley clockwise until crankshaft touches special tool (A).

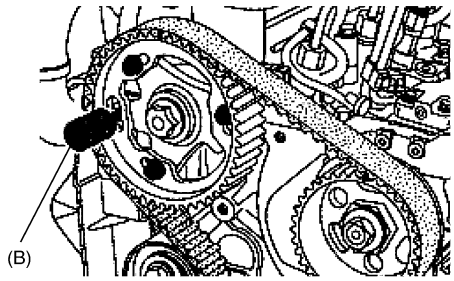

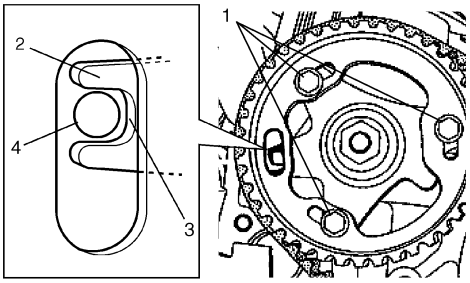

14) Check that special tool (B) inserts holes of camshaft belt pulley hub and cylinder head smoothly.
If not, loosen camshaft pulley bolts (1) by one turn, and turn camshaft pulley hub (2) to just aligning slit (3) of camshaft pulley hub with hole (4) of cylinder head.

NOTE:

Do not tighten camshaft pulley bolts.

Special tool
(B): 09919-58120

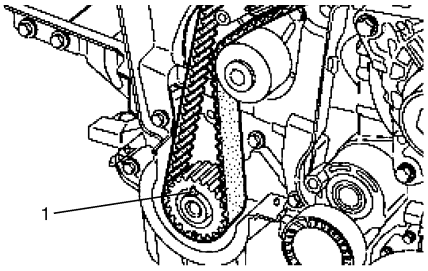

15) Check timing belt pulley key (1) is positioned vertical upwards.

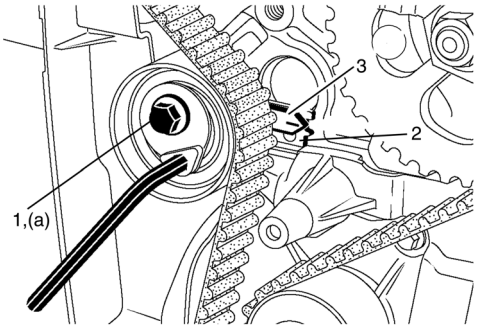

16) Adjust timing belt tension as follows.
a) Loosen timing belt tensioner bolt (1) while holding timing belt tensioner by hexagon wrench, and then gradually bring movable index (3) to center of timing window (2) turing timing belt tensioner.

NOTE:

- **If moving index position upper than timing window, turn timing belt tensioner to counterclockwise.**
- **If moving index position is lower than timing window, turn timing belt tensioner to clockwise.**

b) Tighten timing belt tensioner bolt and camshaft pulley bolts as specified torque.

Tightening torque
Timing belt tensioner bolt (a): 27 N·m (2.7 kg-m, 19.5 lb-ft)
Camshaft pulley bolt: 14 N·m (1.4 kg-m, 10.5 lb-ft)

17) Remove special tools (A) and (B).

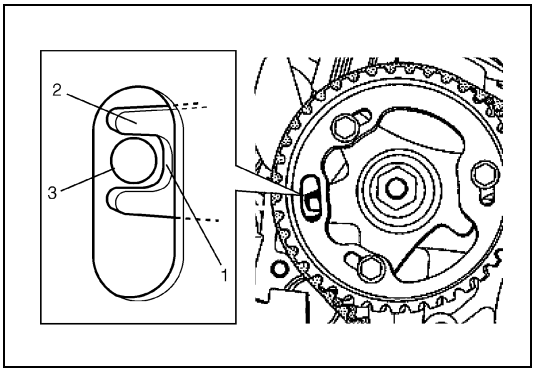

18) Turn crankshaft two revolutions clockwise, and stop it just before aligning slit (1) of camshaft pulley (2) with hole (3) of cylinder head.

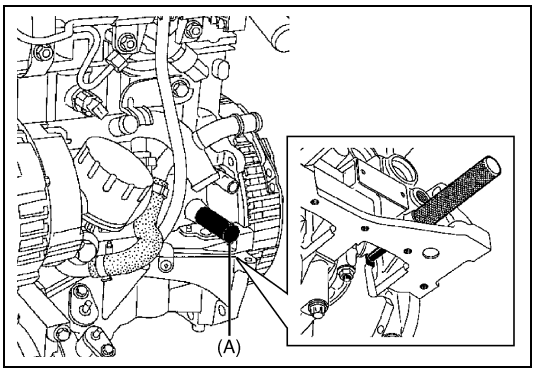

19) Insert special tool (A) into TDC pin hole as shown in figure.

Special tool
(A): 09919-58110

20) Turn crankshaft pulley clockwise until crankshaft touches special tool (A).

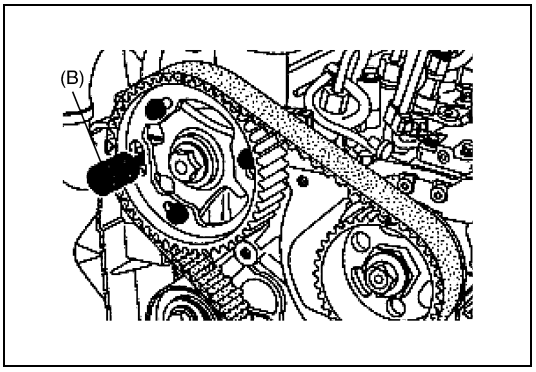

21) Check that special tool (B) inserts holes of timing belt pulley and cylinder head smoothly.
If not, remove timing belt and return to step 4).

Special tool
(B): 09919-58120

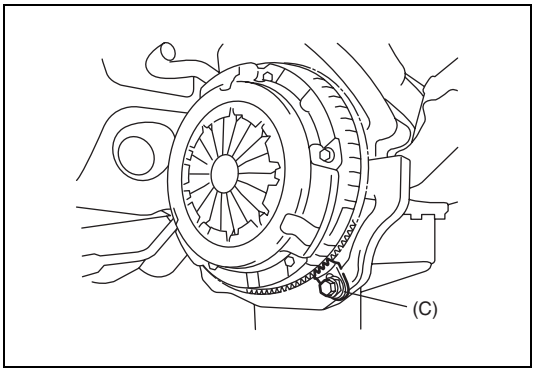

22) Install crankshaft pulley as follows.
a) Lock flywheel using special tool (C).

Tightening torque
(C): 09916-98110

b) Remove crankshaft pulley bolt.

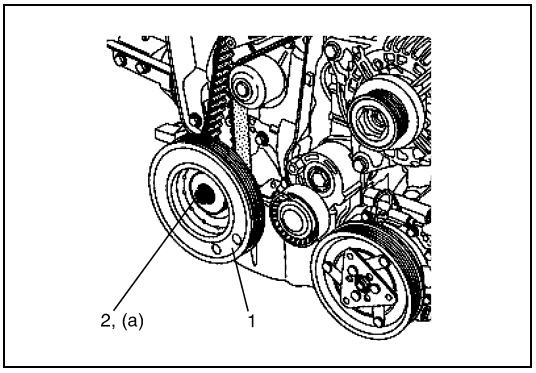

c) Install crankshaft pulley (1) and washer, and tighten new crankshaft pulley bolt (2) as follows.
i) Tighten crankshaft pulley (1) bolt to 120 N·m (12.0 kg-m, 87.0 lb-ft).
ii) Retighten crankshaft pulley bolt to 95°.

Tightening torque
Crankshaft pulley bolt (a): Tighten 120 N·m (12.0 kg-m, 87.0 lb-ft) and 95° by the specified procedure

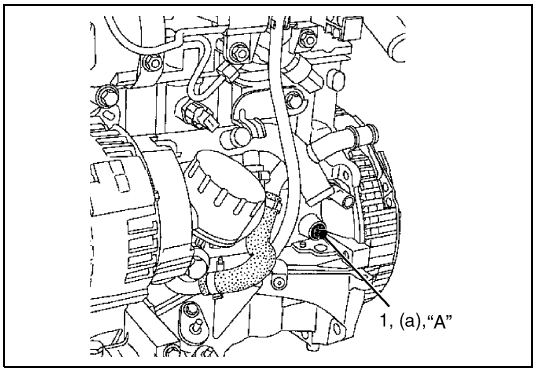

23) Apply sealant “A” to thread of TDC pin cap (1), and tighten TDC pin cap as specified torque.

Tightening torque
TDC pin cap (a): 20 N·m (2.0 kg-m, 14.5 lb-ft)

“A”: RHODORSEAL 5661®

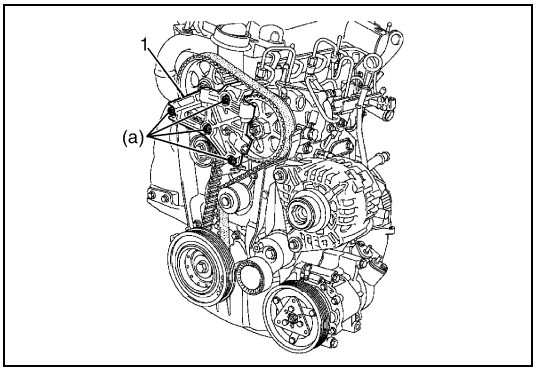

24) Install generator upper bracket support (1).

Tightening torque
Generator upper bracket support bolt (a):
21 N·m (2.1 kg-m, 15.5 lb-ft)

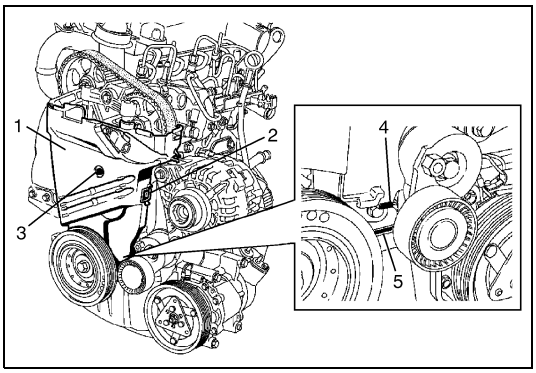

25) Install timing belt lower cover (1) hooking its tabs (2), and install its plastic bolt (3).

NOTE:

When installing timing belt lower cover, position its tab (4) into hole (5) of inner timing cover.

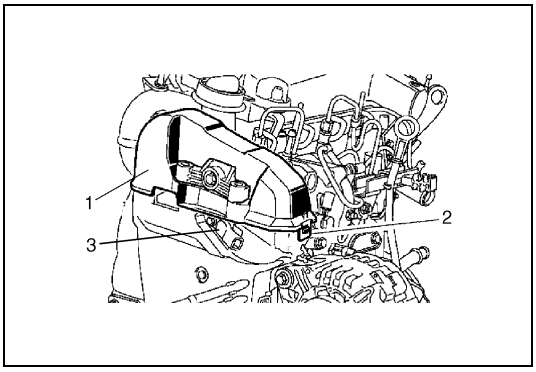

26) Install timing belt upper cover (1) hooking its tabs (2).
27) Install CMP sensor (3).

Tightening torque
CMP sensor bolt:
8 N·m (0.8 kg-m, 6.0 lb-ft)

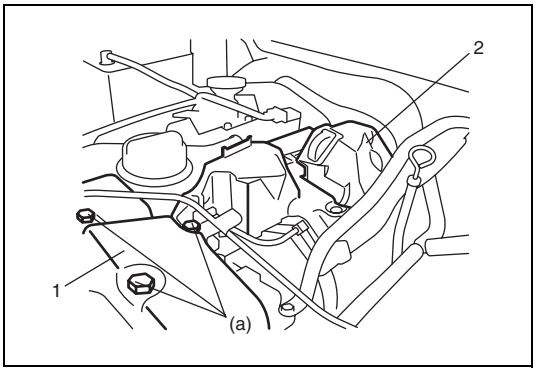

28) Install generator upper bracket (1) and injector cover (2).

Tightening torque
Generator upper bracket bolt (a):
40 N·m (4.0 kg-m, 29.0 lb-ft)

29) Install engine assembly to vehicle referring to “Engine Assembly Removal and Installation” in this section.

Timing Belt and Belt Tensioner Inspection

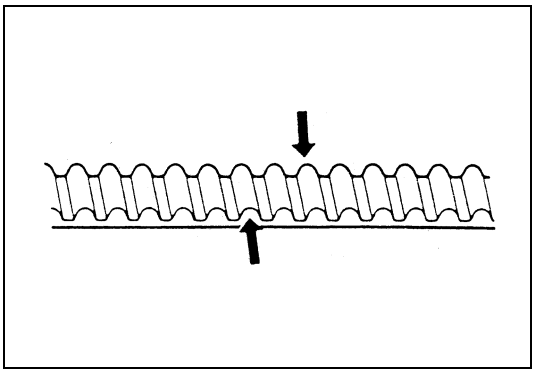

- Inspect timing belt for wear or crack.
  Replace it as necessary.

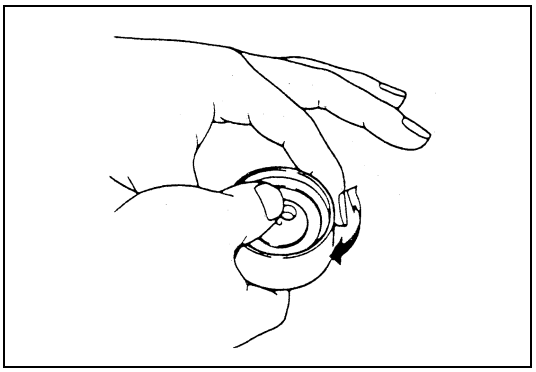

- Inspect timing belt tensioner and roller for smooth rotation.
  Replace it as necessary.

Oil Pump and Oil Pump Chain Components

CAUTION:

Never disassemble oil pump. Disassembly will spoil its original function. If faulty condition is found, replace it with new one.

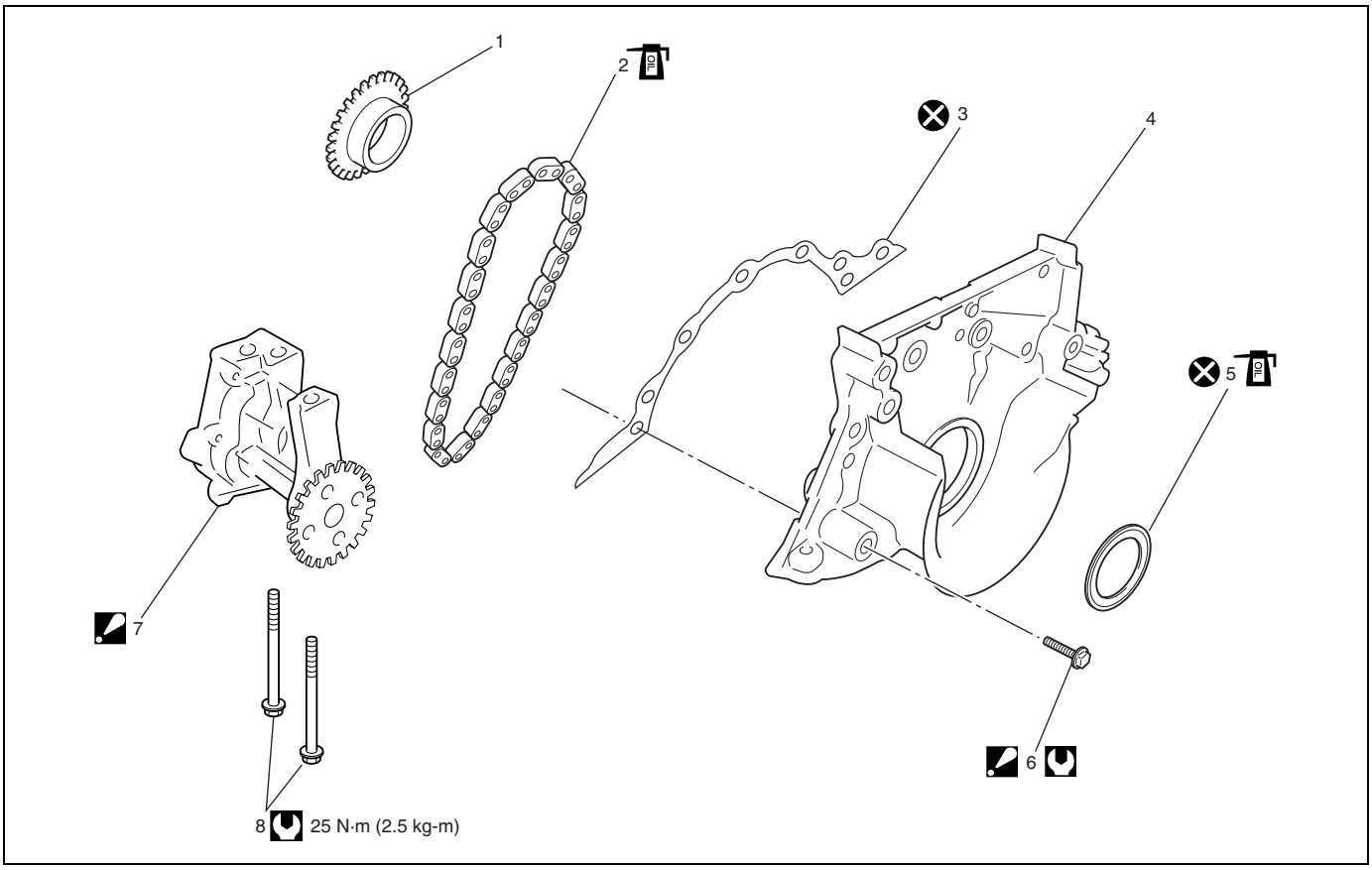

	1. Oil pump drive sprocket		5. Gasket holder plate oil seal : Apply engine oil to oil seal lip.		Tightening Torque
	2. Oil pump chain : Apply engine oil to sliding surface.		6. Gasket holder plate bolt : Tighten 11 N·m (1.1 kg-m, 8.0 lb-ft) by the specified procedure.		Do not reuse.
	3. Gasket		7. Oil pump assembly : Never disassemble oil pump assembly.		
	4. Gasket holder plate		8. Oil pump assembly bolt		

Oil Pump and Oil Pump Chain Removal and Installation

Removal

1) Remove engine assembly from vehicle referring to “Engine Assembly Removal and Installation” in this section.
2) Remove upper oil pan referring to “Oil Pan and Oil Pump Strainer Removal and Installation” in this section.

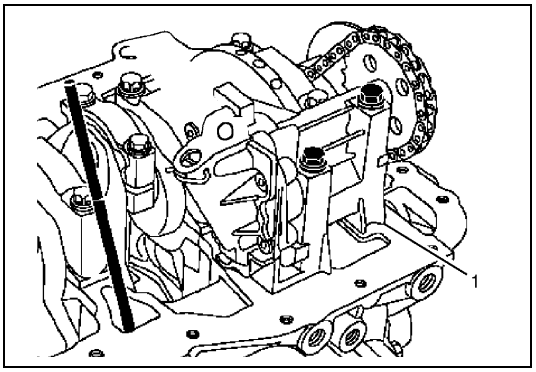

3) Remove oil pump (1) from cylinder block.
4) Remove timing belt referring to “Timing Belt and Belt Tensioner Removal and Installation” in this section.

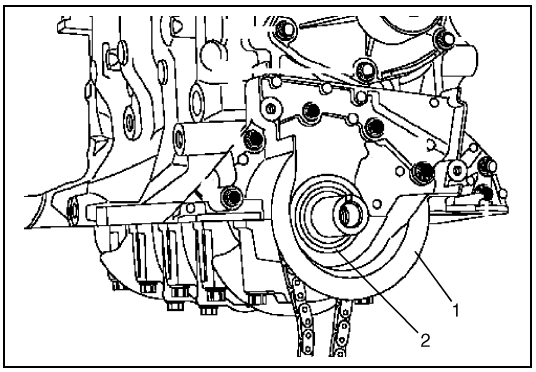

5) Remove gasket holder plate (1).
6) Remove gasket holder plate oil seal (2).

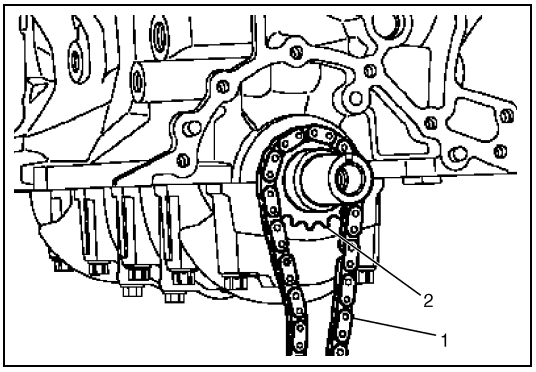

7) Remove oil pump chain (1) and oil pump drive sprocket (2).

Installation

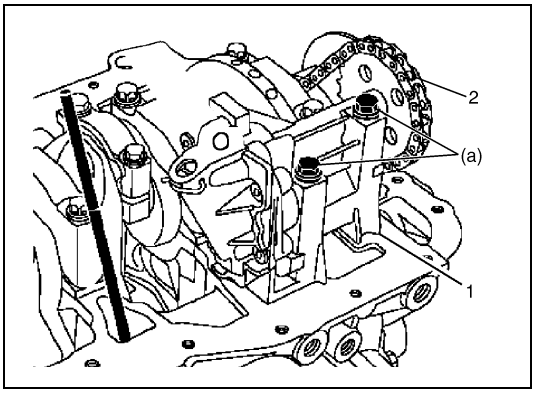

1) Install oil pump (1), oil pump chain (2) and oil pump drive sprocket all together.
   Tighten oil pump bolts to specified torque.

Tightening torque
Oil pump bolt (a): 25 N·m (2.5 kg-m, 18.0 lb-ft)

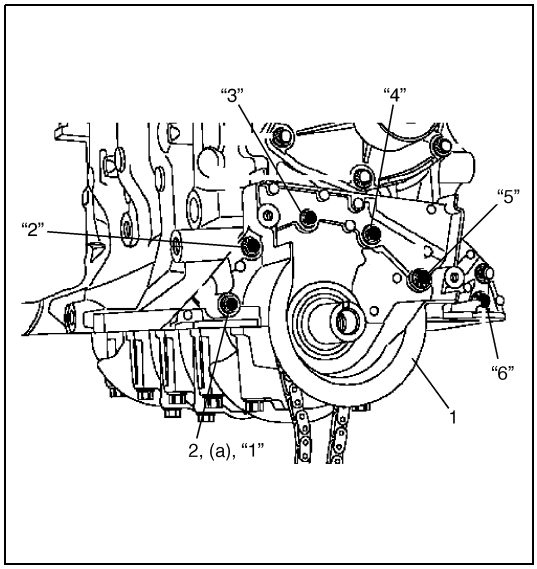

2) Install gasket holder plate (1) to cylinder block with new gasket, and tighten gasket holder plate bolts as follows.
   a) Tighten gasket holder plate bolts ("1" and "6") to 11 N·m (1.1 kg-m, 8.0 lb-ft).
   b) Tighten gasket holder plate bolts ("2", "3", "4" and "5") to 11 N·m (1.1 kg-m, 8.0 lb-ft).

Tightening torque
Gasket holder plate bolt (a):
Tighten 11 N·m (1.1 kg-m, 8.0 lb-ft) by the specified procedure

3) Install upper oil pan and lower oil pan referring to "Oil Pan and Oil Pump strainer Removal and Installation" in this section.

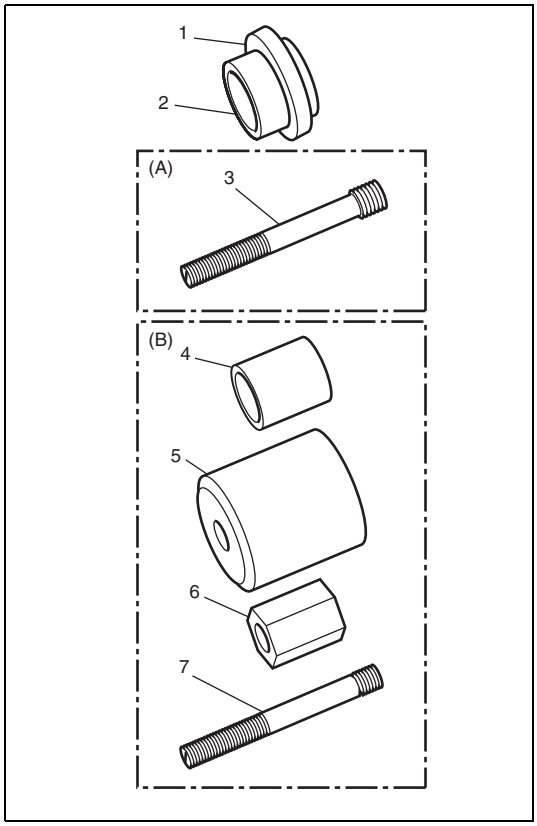

4) Install new gasket holder plate oil seal (1) to gasket holder plate using special tool as follows.

CAUTION:
Do not touch oil seal (1) so that it is extremely fragile. Be sure to install new oil seal using special tool (A), (B) and protector (2) supplied with new oil seal. If it doesn't follow the above-mentioned service, it may cause oil leak from oil seal.

Special tool
(A): 09911-98130
(B): 09911-98140

3.	Bolt
4.	Spacer
5.	Installer
6.	Nut
7.	Bolt (not necessary)

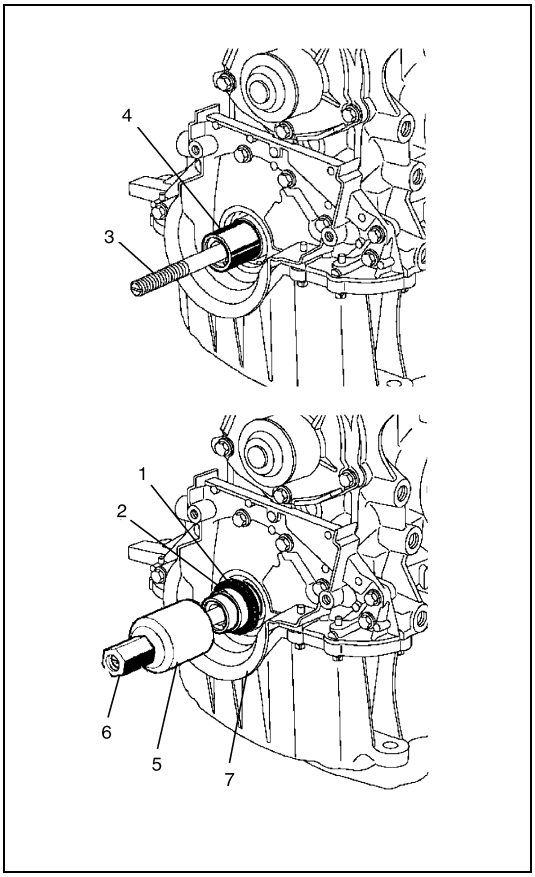

a) Install bolt (3) and spacer (4) of special tool to crankshaft.
b) Install protector (2) together with new oil seal (1) to spacer (4).
c) Install oil seal installer (5) to bolt (3).
d) Tighten nut (6) of special tool until oil seal installer (5) comes into contact with gasket holder plate (7).
e) Remove special tools and protector (2).

5) Install timing belt referring to “Timing Belt and Belt Tensioner Removal and Installation” in this section.
6) Install engine assembly to vehicle referring to “Engine Assembly Removal and Installation” in this section.

Oil Pump and Oil Pump Chain Inspection

- Check rotor and oil pump cases for excessive wear or damage.
  If any malcondition is found, replace oil pump assembly.

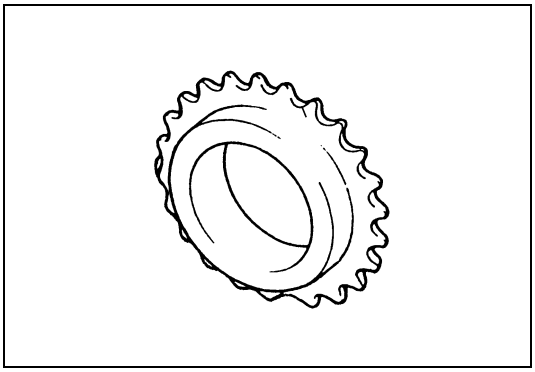

- Check teeth of oil pump drive sprocket for wear or damage.
  If any malcondition is found, replace oil pump drive sprocket.

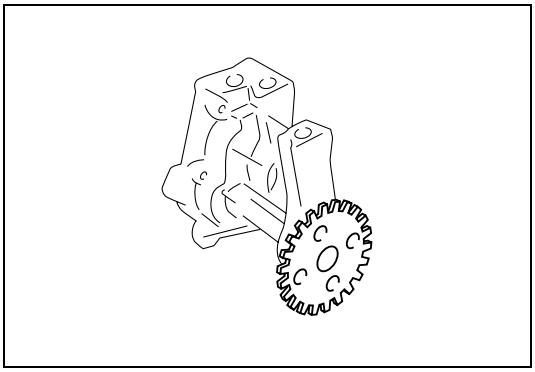

- Check teeth of oil pump sprocket for wear or damage.
  If any malcondition is found, replace oil pump assembly.

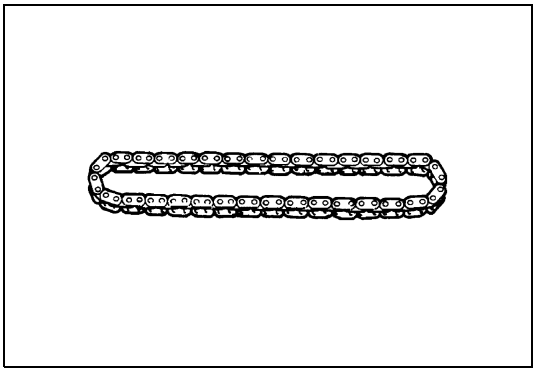

- Check oil pump chain for wear or damage.
  If any malcondition is found, replace oil pump chain.

Camshaft and Tappet Components

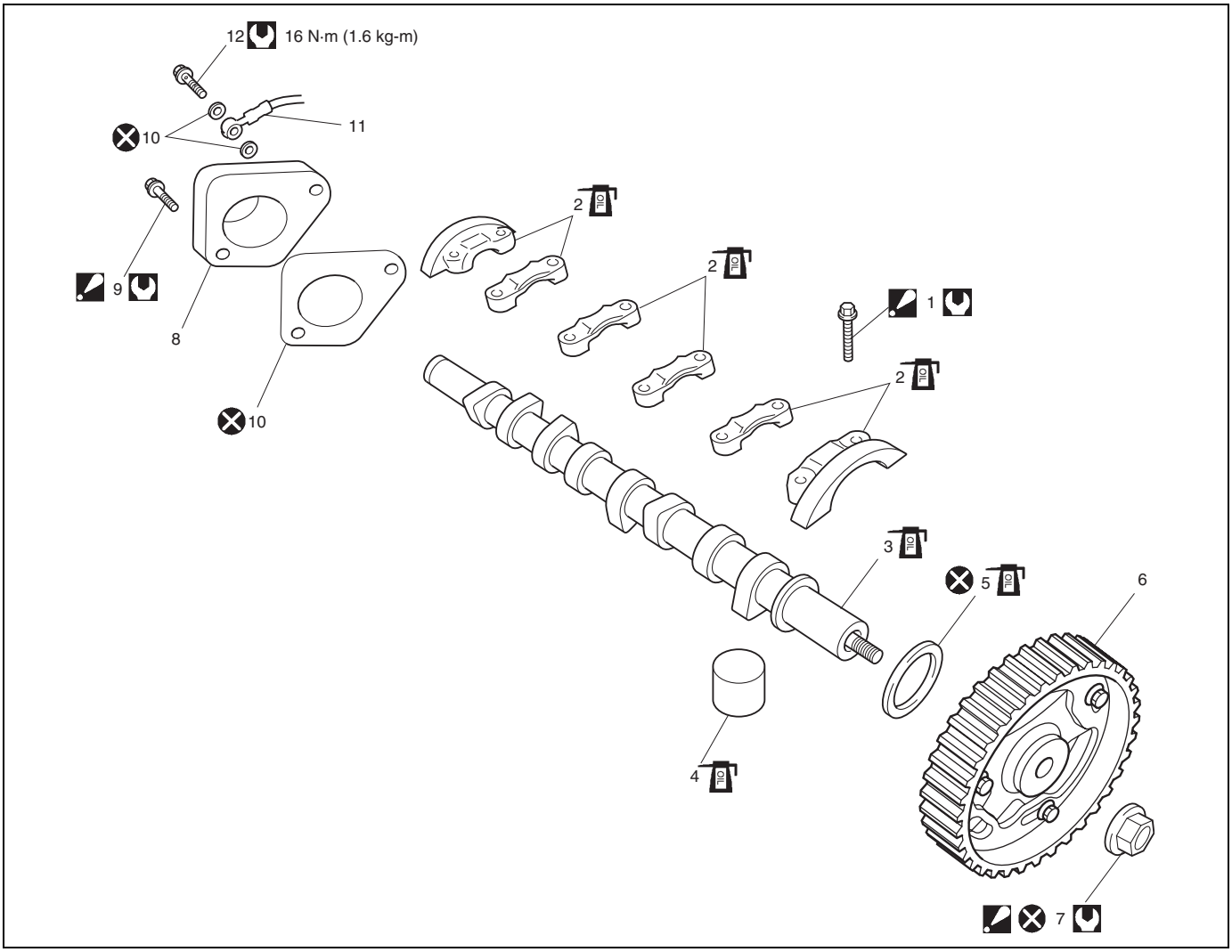

	1. Camshaft housing bolt : Tighten 10 N·m (1.0 kg-m, 7.5 lb-ft) by the specified procedure.		6. Camshaft pulley		11. Vacuum pump oil hose
OIL	2. Camshaft housing : Apply engine oil to sliding surface		7. Camshaft pulley nut : Tighten 30 N·m (3.0 kg-m, 22.0 lb-ft) and 85° by the specified procedure.		12. Vacuum pump oil hose union bolt
OIL	3. Camshaft : Apply engine oil to sliding surface		8. Camshaft cover		Tightening torque
OIL	4. Tappet : Apply engine oil around tappet.		9. Camshaft cover bolt : Tighten 5 N·m (0.5 kg-m, 4.0 lb-ft) and 12 N·m (1.2 kg-m, 9.0 lb-ft) by the specified procedure.		Do not reuse.
OIL	5. Camshaft oil seal : Apply engine oil to oil seal lip.		10. Gasket		

Camshaft and Tappet Removal and Installation

Removal

1) Remove engine assembly from vehicle referring to “Engine Assembly Removal and Installation” in this section.
2) Remove timing belt referring to “Timing Belt and Tensioner Removal and Installation” in this section.

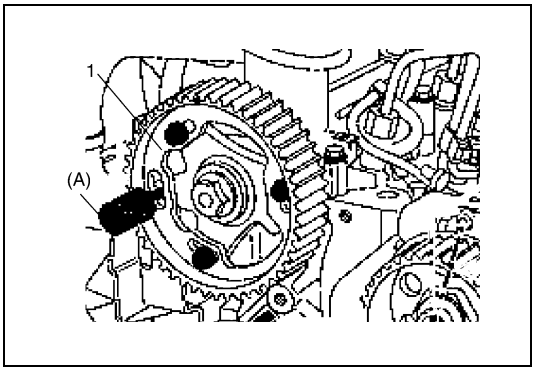

3) Remove special tool (A).

Special tool
(A): 09919-58120

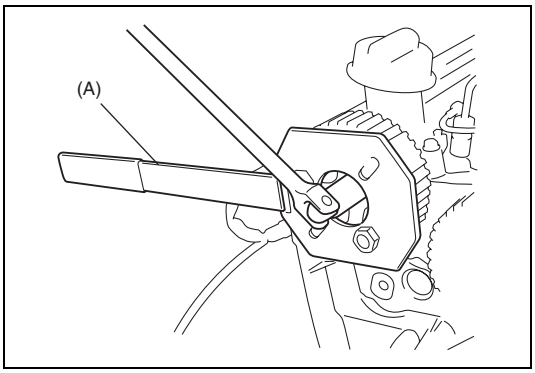

4) Remove camshaft pulley as follows.
   a) Fix camshaft pulley using special tool.

Special tool
(A): 09917-68221

   b) Loosen camshaft pulley nut, and remove camshaft pulley.
5) Remove cylinder head cover referring to “Cylinder Head Cover Removal and Installation” in this section.

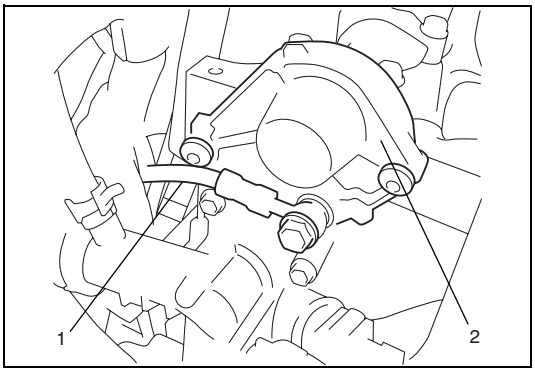

6) Disconnect vacuum pump oil hose (1) from camshaft cover (2).
7) Remove camshaft cover (2).

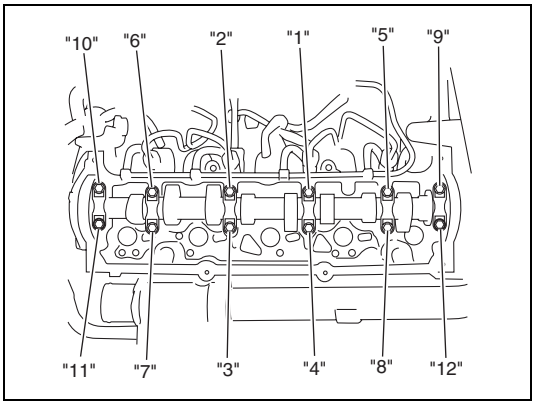

8) Loosen camshaft housing bolts in numerical order (“1” to “12”) as indicated in the figure, and remove them.
9) Remove camshaft housing and camshaft from cylinder head.

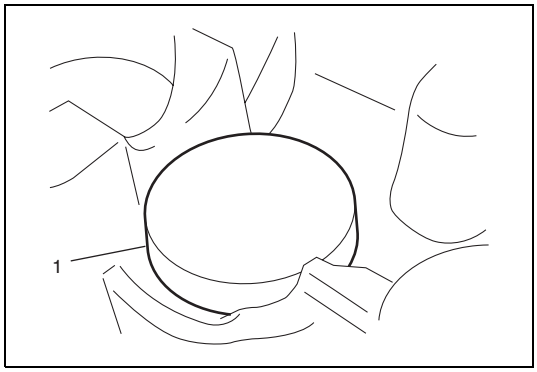

10) Remove tappet (1) from cylinder head.

CAUTION:
Note original position in which each tappet was installed when valve lash (clearance) adjustment is not necessary. If each tappet is not installed to original position, engine will spoil its original performance.

Installation

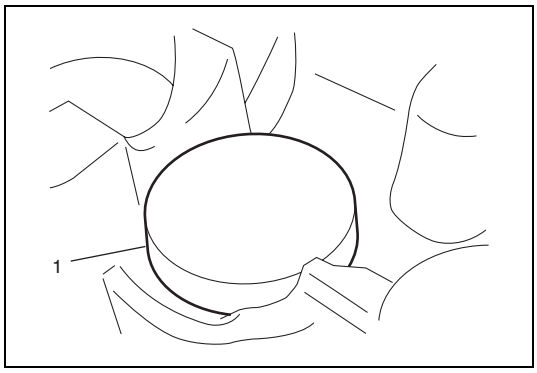

1) Apply engine oil around tappet (1), and then install it to cylinder head.

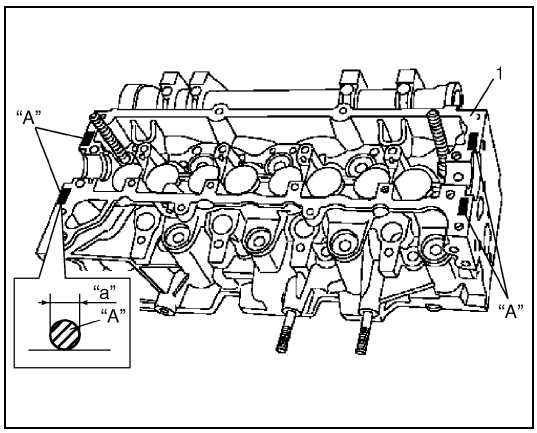

2) Remove oil, old sealant and dust from sealing surfaces. After cleaning, apply sealant "A" to cylinder head (1) sealing surface area as shown in figure.

"A": Loctite 5181®

"a": 1 mm (0.04 in.)

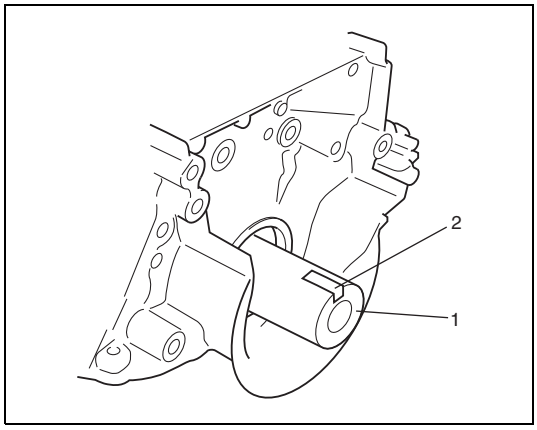

3) Install camshaft to cylinder head as follows.
   a) Direct key groove (2) upward by turning crankshaft (1) clockwise.

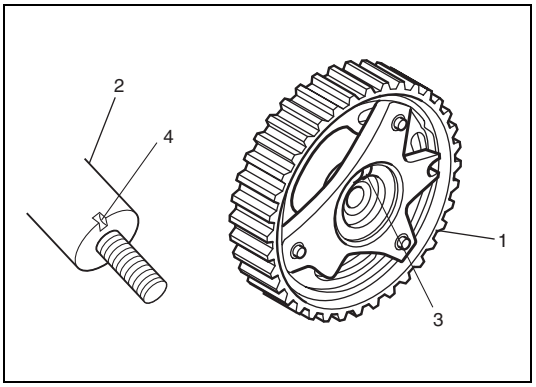

b) Install camshaft pulley (1) to camshaft with aligning key (3) of camshaft pulley to key groove (4) of camshaft (2), and then tighten camshaft pulley nut to temporary.
c) Apply engine oil to sliding surface of each camshaft and camshaft journal.

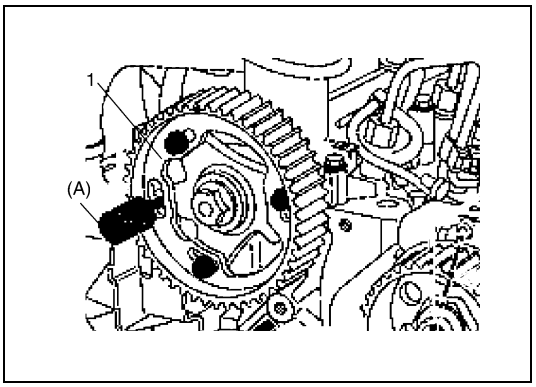

d) Fit camshaft to cylinder head and install special tool into holes of timing belt pulley (1) and cylinder head as shown in figure.

Special tool
(A): 09919-58120

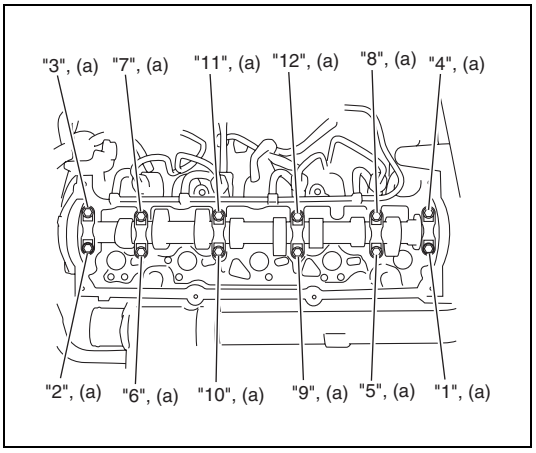

4) Install camshaft housing to cylinder head as follows.
a) Fit camshaft housing to cylinder head in specified position as shown.
b) Tighten camshaft housing bolts temporarily by hand.
c) Tighten camshaft housing bolts in numerical order as indicated in figure a little at a time till they are tightened to specified torque.

Tightening torque
Camshaft housing bolt (a):
Tighten 10 N·m (1.0 kg-m, 7.5 lb-ft) by the specified procedure

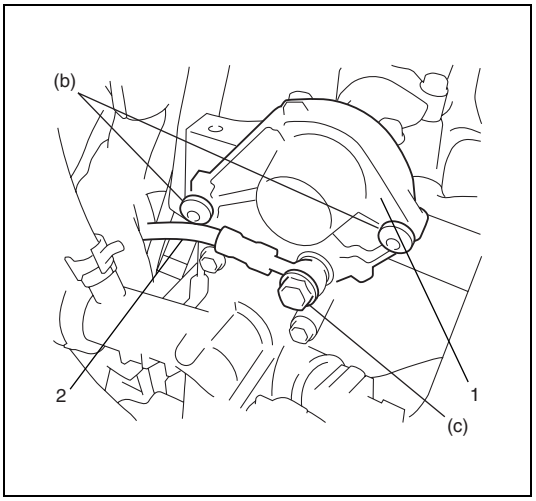

5) Install camshaft cover (1) with new gasket.

Tightening torque
Camshaft cover bolt (b):
Tighten 5 N·m (0.5 kg-m, 4.0 lb-ft) and 12 N·m (1.2 kg-m, 9.0 lb-ft) by the specified procedure

6) Connect vacuum pump oil hose (2) to rear camshaft (1) cover with new gasket.

Tightening torque
Vacuum pump oil hose union bolt (c):
16 N·m (1.6 kg-m, 12.0 lb-ft)

7) Remove camshaft pulley and special tool.

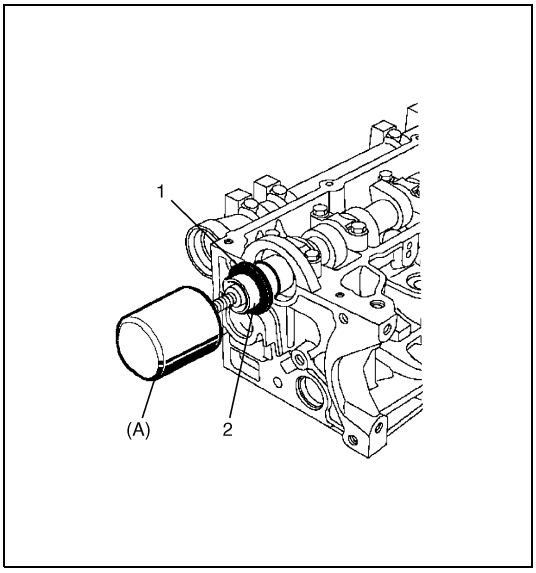

8) Install new oil seal (1) together with protector (2) using special tool and plastic hammer until special tool comes into contact with cylinder head.

CAUTION:
Do not touch oil seal (1) so that it is extremely fragile. Be sure to install new oil seal using special tool (A) and protector (2) supplied with new oil seal. If it doesn't follow the above-mentioned service, it may cause oil leak from oil seal.

Special tool
(A): 09911-98120

9) Install cylinder head cover referring to "Cylinder Head Cover Removal and Installation" in this section.

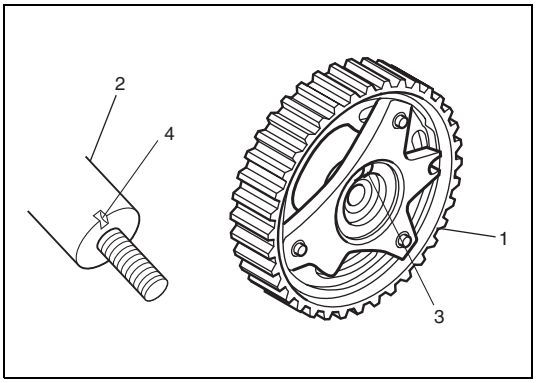

10) Install camshaft pulley (1) to camshaft (2) as follows.
   a) Install camshaft pulley to camshaft with aligning key (3) of camshaft pulley with key groove (4) of camshaft.

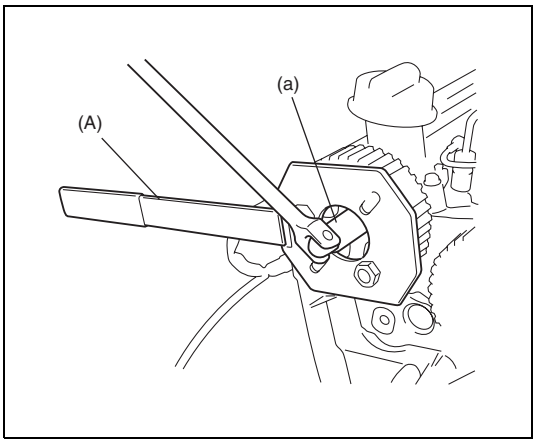

   b) Fix camshaft pulley using special tool.

Special tool
(A): 09917-68221

   c) Tighten new camshaft pulley nut to 30 N·m (3.0 kg-m, 22.0 lb-ft).
   d) Retighten camshaft pulley nut 85°.

Tightening torque
Camshaft pulley nut (a):
Tighten 30 N·m (3.0 kg-m, 22.0 lb-ft) and 85° by the specified procedure

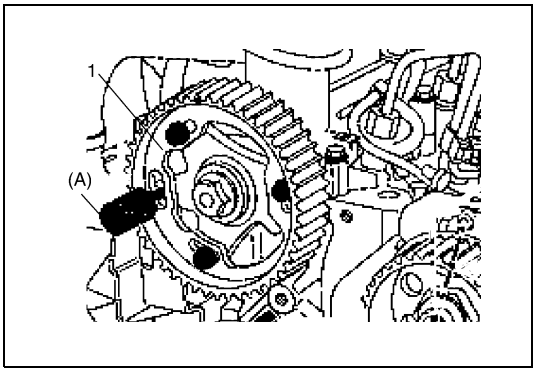

11) Install special tool into timing belt pulley (1) and cylinder head hole.

Special tool
(A): 09919-58120

12) Install timing belt referring to "Timing Belt and Tensioner Removal and Installation" in this section.
13) Check valve lash (clearance) referring to "Valve Lash (Clearance)" in this section.
14) Install engine assembly to vehicle referring to "Engine Assembly Removal and Installation" in this section.

Camshaft and Tappet Inspection

Camshaft

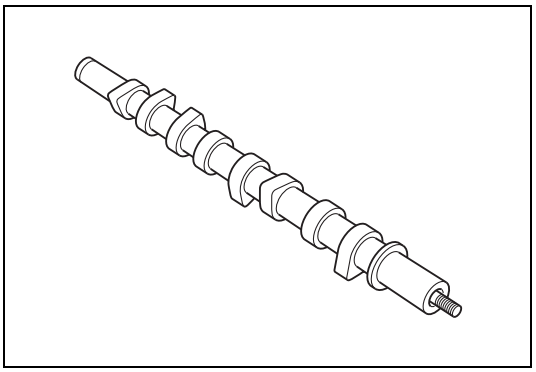

- Check teeth of sprocket for wear or damage.
- Check journals and cam faces for wear or damage.
  If any malcondition is found, replace camshaft.

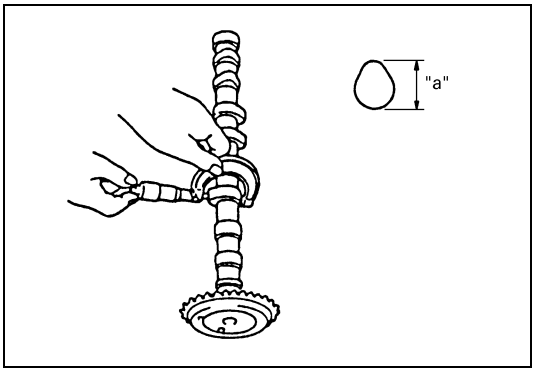

- Using a micrometer, measure cam height “a”. If measured height is out of specification, replace camshaft.

Cam height “a”
In: 43.985 – 44.045 mm (1.73170 – 1.73405 in.)
Ex: 44.565 – 44.625 mm (1.75453 – 1.75688 in.)

Camshaft Journal Wear

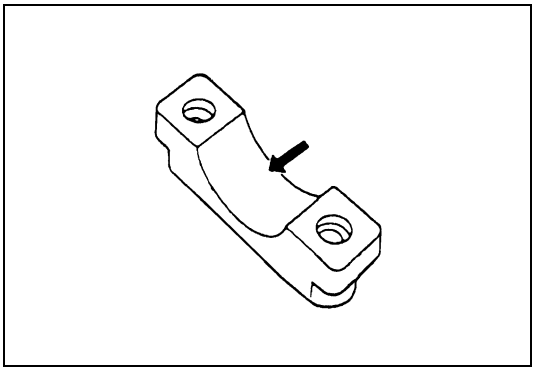

- Check camshaft journals and camshaft housings for pitting, scratches, wear or damage.
  If any malcondition is found, replace camshaft or cylinder head with housing. Never replace cylinder head without replacing housings.

- Check clearance between camshaft and camshaft journal using gauging plastic as follows.

NOTE:

Do not rotate camshaft while gauging plastic is installed.

a) Clean housings and camshaft journals.
b) Remove all tappets.
c) Install camshaft to cylinder head.
d) Place a piece of gauging plastic to full width of journal of camshaft (parallel to camshaft).

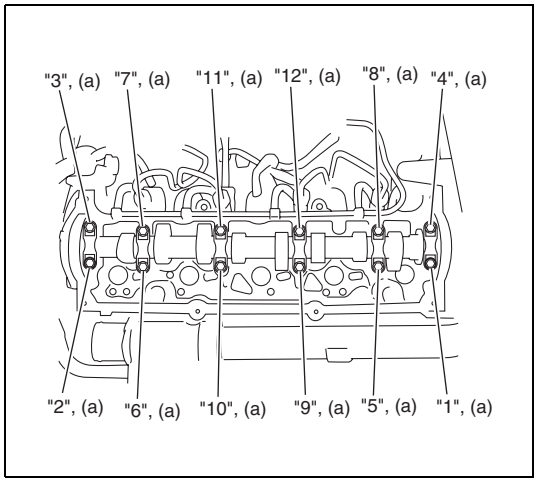

e) Install camshaft housing to cylinder head as follows.
  i) Fit camshaft housing to cylinder head.
  ii) Tighten camshaft housing bolts temporarily by hand.
  iii) Tighten camshaft housing bolts in numerical order as indicated in figure a little at a time till they are tightened to specified torque.

Tightening torque
Camshaft housing bolt (a):
Tighten 10 N·m (1.0 kg-m, 7.5 lb-ft) by the specified procedure

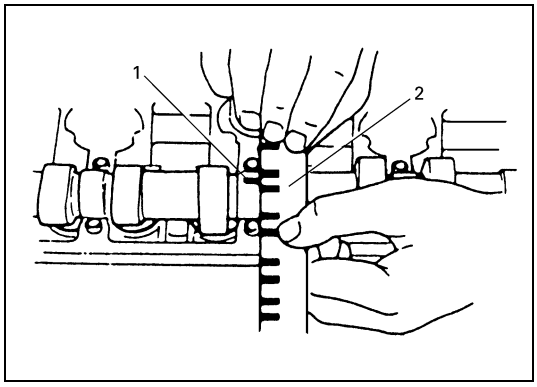

f) Remove housing, and using scale (2) on gauging plastic (1) envelop, measure gauging plastic width at its widest point.

Camshaft journal clearance:
0.049 – 0.171 mm (0.00193 – 0.00673 in.)

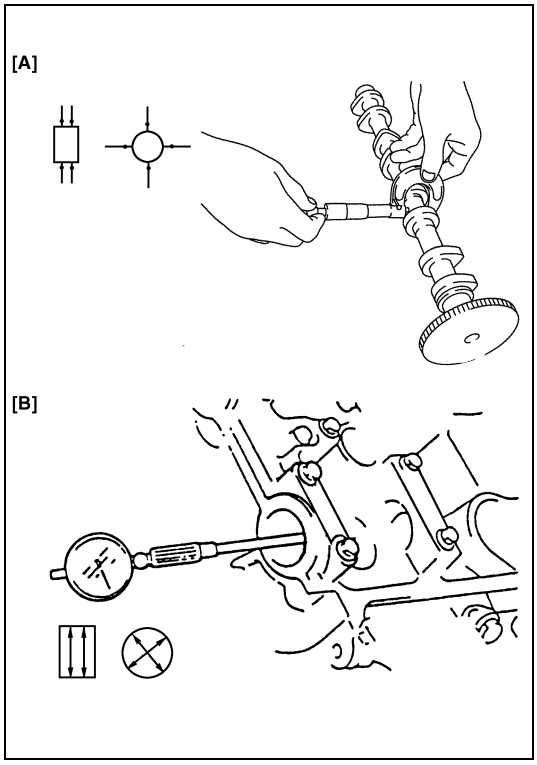

g) If measured camshaft journal clearance exceeds limit, measure journal (housing) bore and outside diameter of camshaft journal. Replace camshaft or cylinder head assembly whichever the difference from specification is greater.

Camshaft journal outside diameter [A]
No.6: 27.979 – 27.999 mm (1.10154 – 1.10232 in.)
Other: 24.979 – 24.999 mm (0.9835 – 0.98421 in.)

Camshaft journal bore diameter [B]
No.6: 28.040 – 28.060 mm (1.10394 – 1.10472 in.)
Other: 25.040 – 25.060 mm (0.98583 – 0.98661 in.)

Camshaft Thrust Play

1) Clean housings and camshaft journals.
2) Remove all tappets.
3) Remove all valves referring to “Valves and Cylinder Head” in this section.
4) Install camshaft to cylinder head.

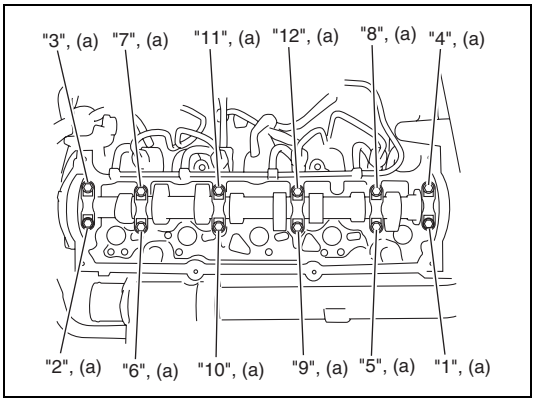

5) Install camshaft housing to cylinder head as follows.
   a) Fit camshaft housing to cylinder head.
   b) Tighten camshaft housing bolts temporarily by hand.
   c) Tighten camshaft housing bolts in numerical order as indicated in figure a little at a time till they are tightened to specified torque.

Tightening torque
Camshaft housing bolt (a):
Tighten 10 N·m (1.0 kg-m, 7.5 lb-ft) by the specified procedure

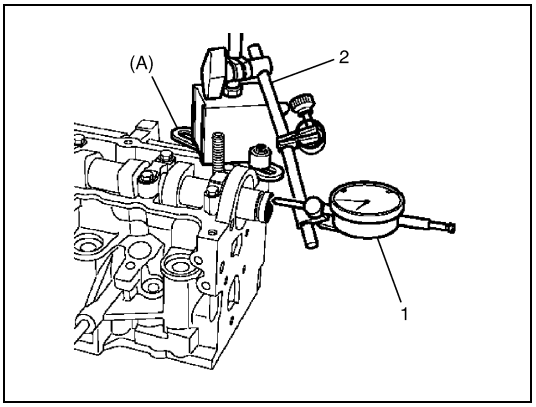

6) Measure camshaft thrust play using special tool, dial gauge (1) and magnetic stand (2) as shown in figure.
   If measured thrust play is out of its specification, replace camshaft or cylinder head.

Special tool
(A): 09917-68110

Camshaft thrust play:
0.080 – 0.178 mm (0.00315 – 0.00700 in.)

Wear of Tappet

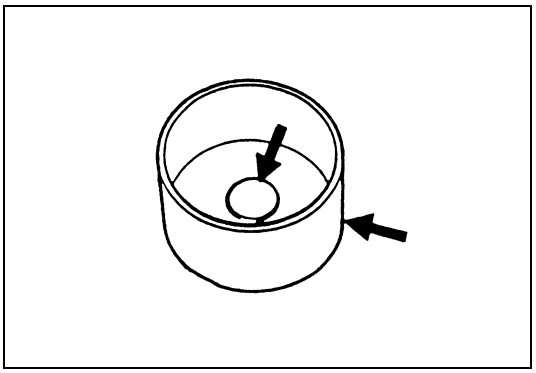

- Check tappet for pitting, scratches or damage.
  If any malcondition is found, replace.

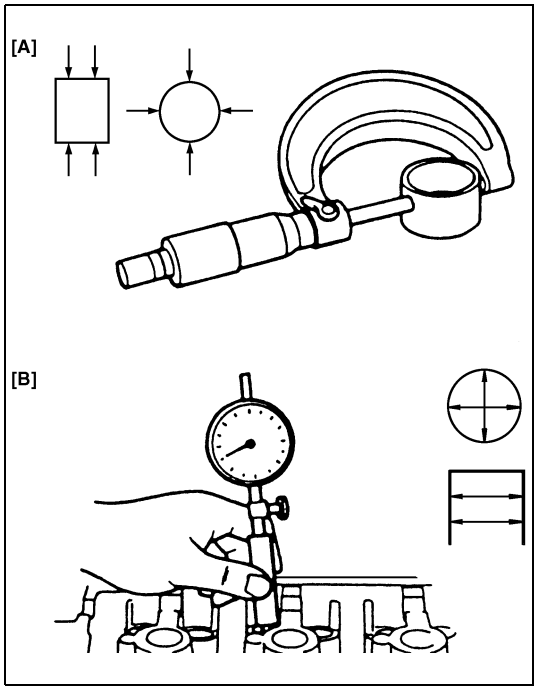

- Measure cylinder head bore and tappet outside diameter to determine cylinder head-to-tappet clearance. If clearance exceeds specification, replace tappet or cylinder head.

Cylinder head to tappet clearance:
0.015 – 0.075 mm (0.00059 – 0.00295 in.)

Tappet outside diameter [A]:
34.965 – 34.985 mm (1.37658 – 1.37736 in.)

Cylinder head tappet bore [B]:
35.000 – 35.040 mm (1.37796 – 1.37952 in.)

Valves and Cylinder Head Components

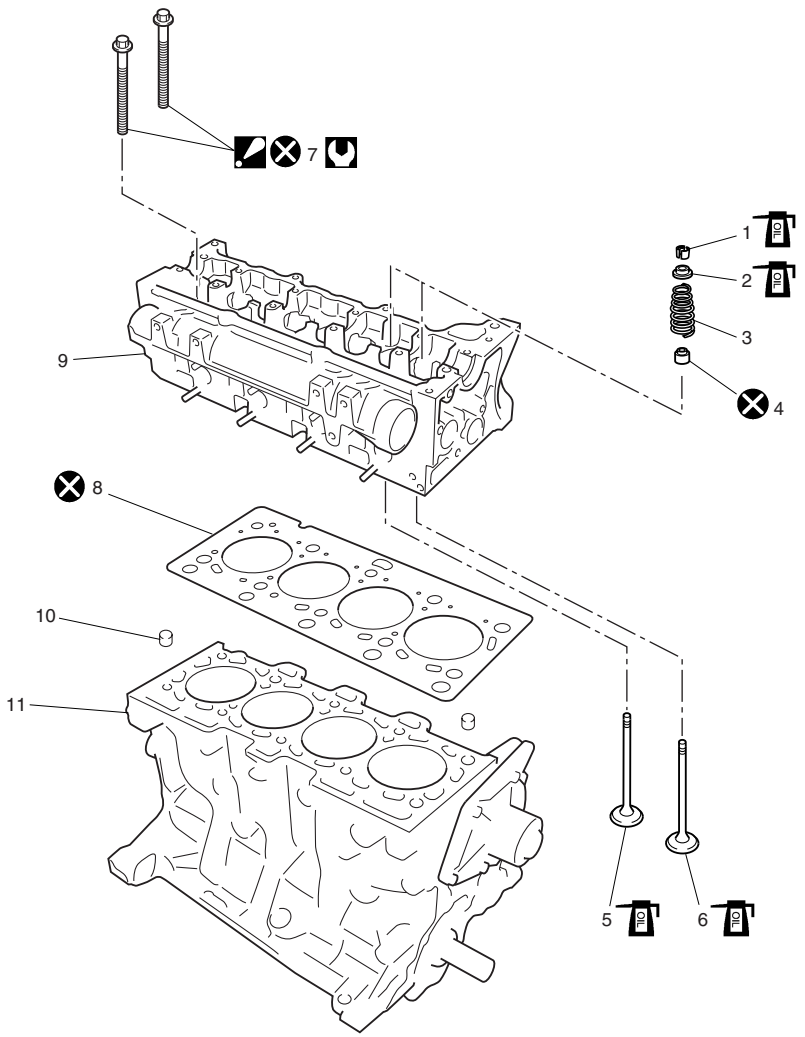

1.	Valve cotter	6.	Exhaust valve	11.	Cylinder block
2.	Valve spring retainer	7.	Cylinder head bolt : Tighten 25 N·m (2.5 kg-m, 18.0 lb-ft) and 255° by the specified procedure.		Tightening Torque
3.	Valve spring	8.	Cylinder head gasket		Apply engine oil to sliding surface of each parts.
4.	Valve stem seal	9.	Cylinder head		Do not reuse.
5.	Intake valve	10.	Knock pin		

Valves and Cylinder Head Assembly Removal and Installation

Removal

1) Remove engine assembly from vehicle referring to “Engine Assembly Removal and Installation” in this section.
2) Remove exhaust manifold referring to “Exhaust Manifold Removal and Installation” in this section.
3) Remove camshaft from cylinder head referring to “Camshaft and Tappet Removal and Installation” in this section.

4) Remove EGR valve body and intake pipe No.1 and No.2 referring to “EGR Body and Intake Pipe Removal and Installation” in this section.
5) Remove thermostat assembly referring to “Thermostat Assembly Removal and Installation” in Section 6B2.
6) Remove injection pump referring to “Injection Pump Removal and Installation” in Section 6E2.
7) Remove common rail referring to “Common rail (High Pressure Fuel Injection Rail) Removal and Installation” in Section 6E2.
8) Remove fuel injector referring to “Fuel Injector Removal and Installation” in Section 6E2.
9) Remove generator and generator upper bracket referring to “Generator Dismounting and Remounting” in Section 6H2.
10) Remove grow plugs referring to “Grow Plug Removal and Installation” in Section 6-2.

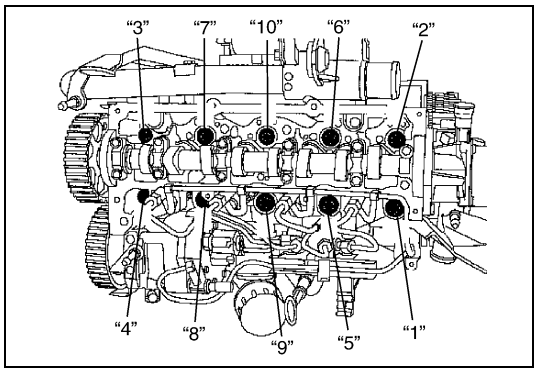

11) Loosen cylinder head bolts in numerical order as indicated in figure, and remove them.
12) Check all around cylinder head for any other parts required to be removed or disconnected and remove or disconnect whatever necessary.

Installation

1) Clean mating surface of cylinder head and cylinder block. Remove oil, old gasket and dust from mating surface.

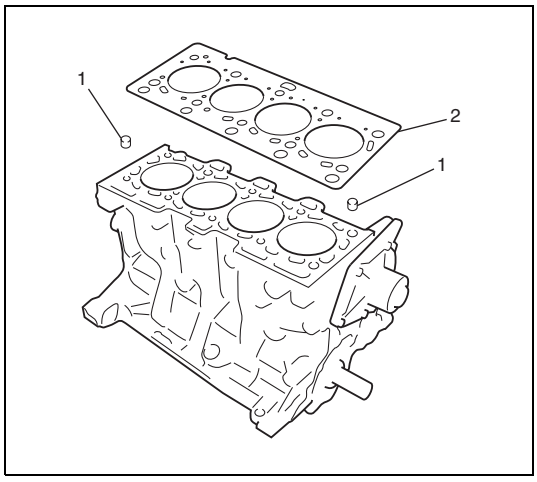

2) Install knock pins (1) to cylinder block.
3) Install new cylinder head gasket (2) to cylinder block.

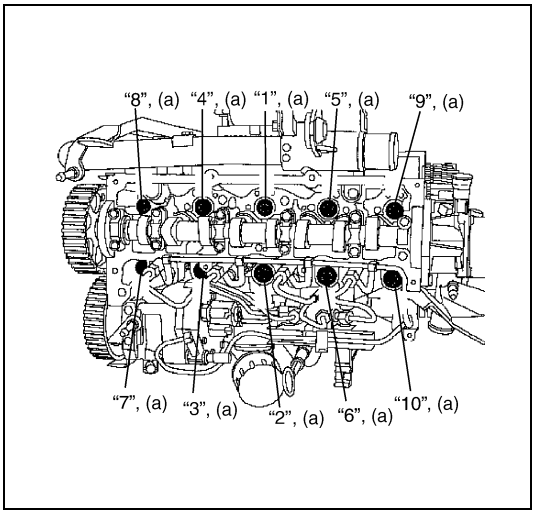

4) Tighten new cylinder head bolts gradually as follows.

NOTE:

Do not oil cylinder head bolt.

a) Tighten all bolts to 25 N·m (2.5 kg-m, 18.0 lb-ft) according to numerical order in figure.
b) Retighten all bolts 255° according to numerical order in figure.

Tightening torque
Cylinder head bolt (a):
Tighten 25 N·m (2.5 kg-m, 18.0 lb-ft) and 255° by the specified procedure

5) Install grow plugs referring to "Grow Plug Removal and Installation" in Section 6-2.
6) Install generator and generator upper bracket referring to "Generator Dismounting and Remounting" in Section 6H2.
7) Install fuel injector referring to "Fuel Injector Removal and Installation" in Section 6E2.
8) Install common rail referring to "Common Rail (High Pressure Fuel Injection Rail) Removal and Installation" in Section 6E2.
9) Install injection pump referring to "Injection Pump Removal and Installation" in Section 6E2.
10) Install thermostat referring to "Thermostat Assembly Removal and Installation" in Section 6B2.
11) Install EGR valve body and intake pipe referring to "EGR Body and Intake Pipe Removal and Installation" in this section.
12) Install tappet and camshaft to cylinder head referring to "Camshaft and Tappet Removal and Installation" in this section.
13) Install exhaust manifold referring to "Exhaust Manifold Removal and Installation" in this section.
14) Install engine assembly to vehicle referring to "Engine Assembly Removal and Installation" in this section.

Valves and Cylinder Head Assembly Inspection

Valve Protrusion

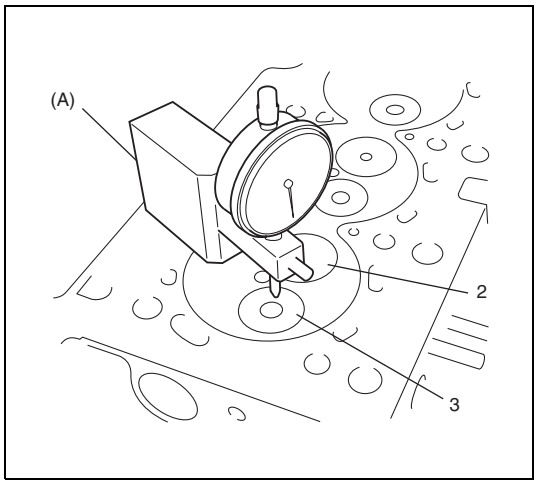

1) Clean valve face and then measure protrusion of each valve using special tool and dial gauge as shown in figure.
   If average is out of specification, grind valve seat and then lap valve on seat.

Special tool
(A): 09910-26510/OUT 0000005

Valve protrusion
Intake and exhaust valve protrusion
"a": –0.07 to 0.07 mm (–0.0027 to 0.0027 in.)

2.	Intake valve
3.	Exhaust valve

Valves and Cylinder Head Assembly Disassembly and Reassembly

Disassembly

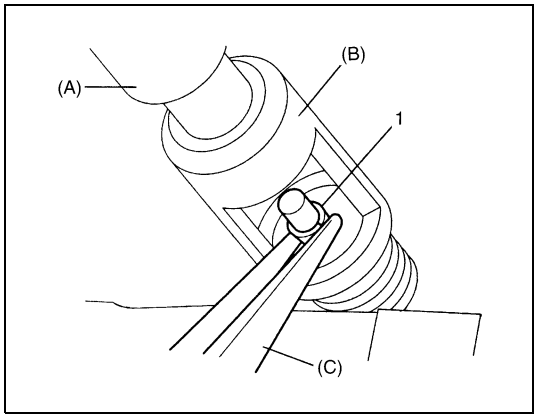

1) Using special tool (A) and (B), compress valve springs and then remove valve cotters (1) using special tool (C) as shown in figure.

Special tool
(A): 09916-14510
(B): 09916-14521
(C): 09916-84511

2) Release special tool, and remove spring retainer and valve spring.
3) Remove valve from combustion chamber side.

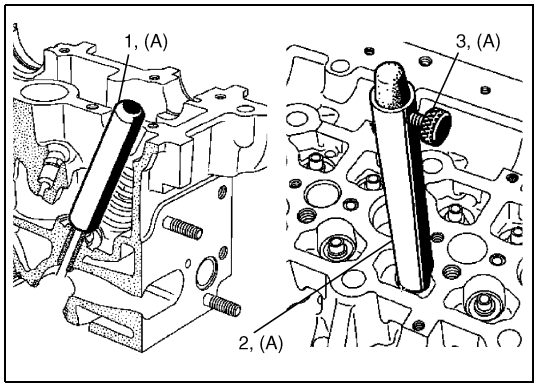

4) Measure stem seal height in order to install stem seal in specified position as follows.
   a) Fit pushrod (1) of special tool on valve stem seal.
   b) Fit guide tube (2) of special tool over pushrod (1) until guide tube comes into contact with cylinder head, and lock pushrod with screw (3).
   c) Remove special tool.

Special tool
(A): 09916-58130

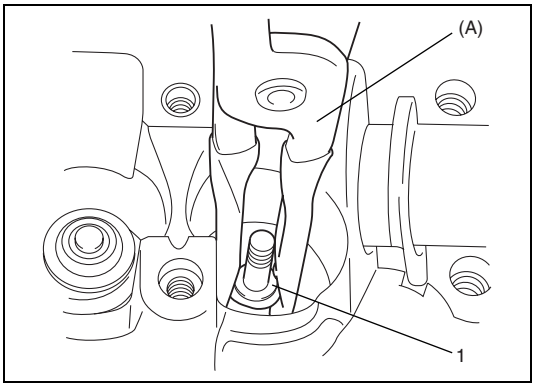

5) Remove stem seal from valve stem using special tool.

Special tool
(A): 09916-48110

Reassembly

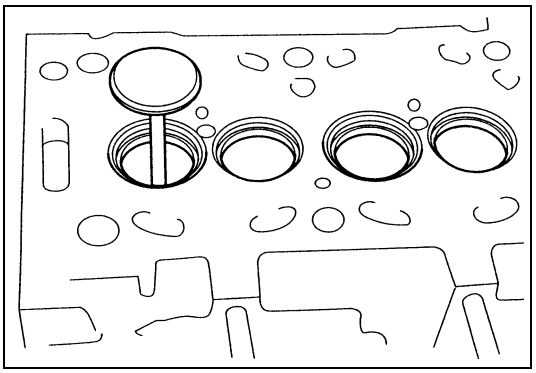

1) Apply engine oil to valve guide bore and valve stem, and install valve to valve guide.

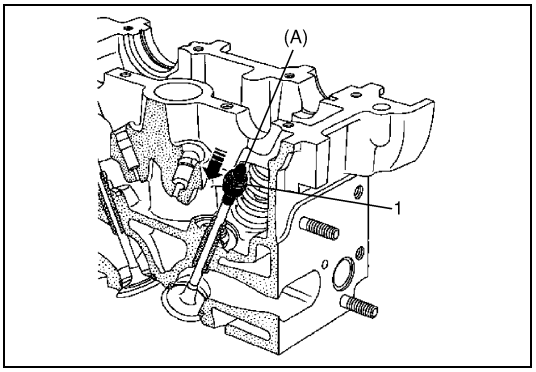

2) Install special tool to valve stem in order to prevent stem seal from damage, and install stem seal to valve stem.

NOTE:

Be sure to remove special tool after installing stem seal.

Special tool
(A): 09916-58130

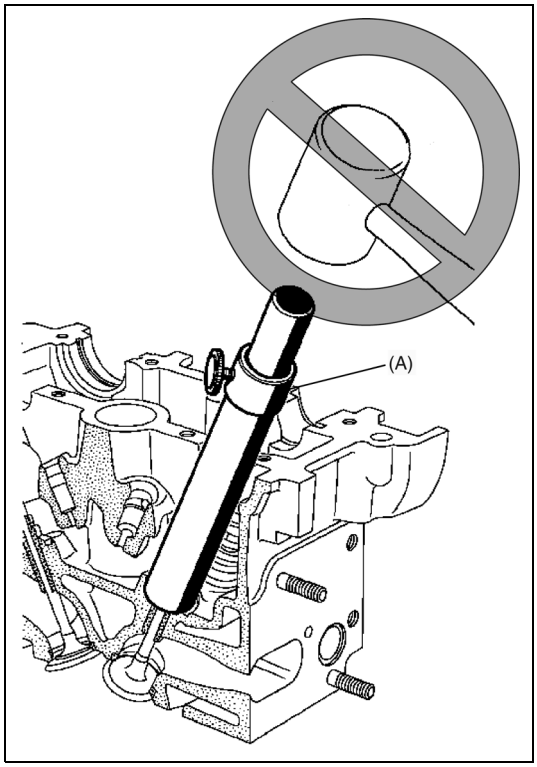

3) Press into stem seal to valve stem in specified position as follows.
   a) Place special tool which is measured stem seal height in removal procedure on valve stem seal.

Special tool
(A): 09916-58130

   b) Press into stem seal tapping top of special tool by hand until special tool touches cylinder head.

CAUTION:
Do not tap special tool by hammer.
It may result in misinstalling of stem seal and damage of special tool.

NOTE:
Do not lubricate the valve stem seal before fitting then.

4) Install valve spring and spring retainer.

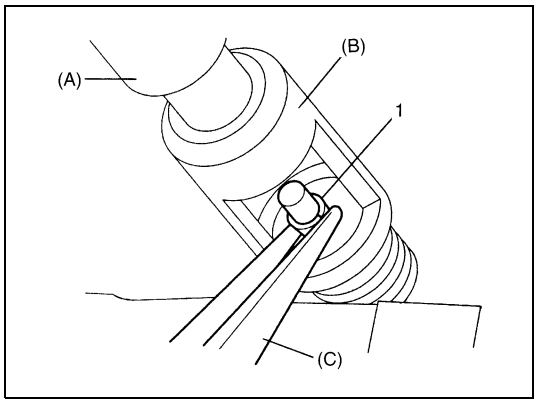

5) Using special tool (A) and (B), compress valve spring. And, fit two valve cotters (1) into groove in valve stem using special tool (C) as shown in figure.

Special tool
(A): 09916-14510
(B): 09916-14521
(C): 09916-84511

Valves and Cylinder Head Components Inspection

Valve Guides

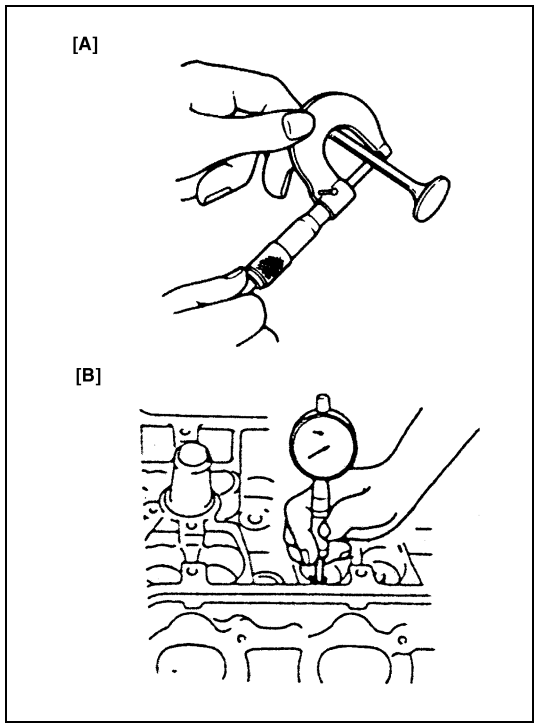

- Using a micrometer and bore gauge, take diameter readings on valve stems and guides to check stem-to-guide clearance. Be sure to take reading at more than one place along the length of each stem and guide.
  If clearance exceeds specification, replace valve and valve guide.

Valve stem-to-guide clearance
In: 0.015 – 0.049 mm (0.00059 – 0.00192 in.)
Ex: 0.029 – 0.063 mm (0.00115 – 0.00248 in.)

Valve stem diameter [A]
In: 5.969 – 5.985 mm (0.23500 – 0.23562 in)
Ex: 5.955 – 5.971 mm (0.23445 – 0.23507 in.)

Valve guide bore [B]
In and Ex: 6.000 – 6.018 mm (0.23622 – 0.23692 in.)

Valves

- Remove all carbon from valves.
- Inspect each valve for wear, burn or distortion at its face and stem end, as necessary, replace it.

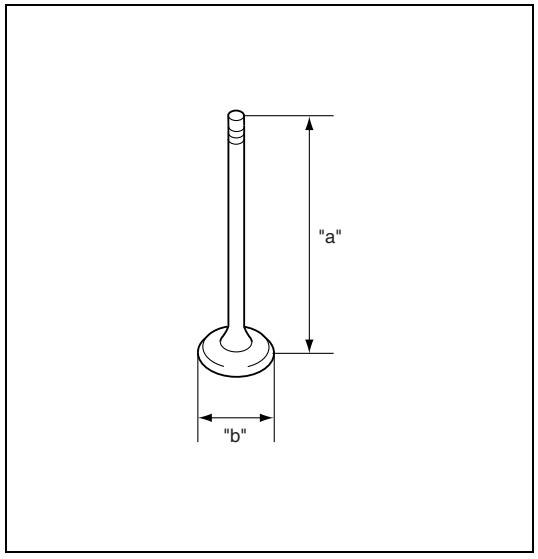

- Measure length “a” of valve.
  If measured length is out of specification, replace valve.

Valve length “a”
In: 100.73 – 101.17 mm (3.9658 – 3.9830 in.)
Ex: 100.53 – 100.97 mm (3.9579 – 3.9751 in.)

- Measure diameter “b” of valve.
  If measured diameter is out of specification, replace valve.

Valve head diameter “b”
In: 33.38 – 33.62 mm (1.3142 – 1.3236 in.)
Ex: 28.88 – 29.12 mm (1.1370 – 1.1464 in.)

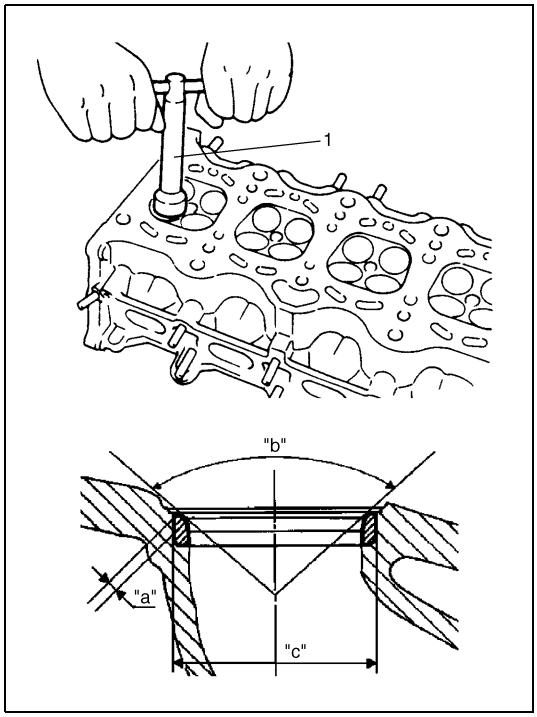

- Valve seat repair:
  A valve seat not producing a uniform contact with its valve or showing width of seating contact that is out of specified range must be repaired by regrinding or by cutting and regrinding and finished by lapping.

a) **Valve Seat**: Use valve seat cutters (1) to make a cut as illustrated in figure.

Seat width
"a": 1.8 mm (0.071 in.)

Seat angle
"b": 89° 30'

b) **Valve Lapping**: Lap valve on seat in two steps, first with coarse size lapping compound applied to face and the second with fine-size compound, each time using valve lapper according to usual lapping method.

Cylinder Head

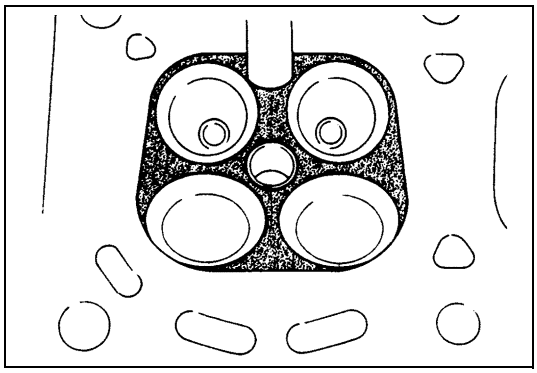

- Remove all carbon deposits from combustion chambers.

NOTE:

Do not use any sharp-edged tool to scrape off carbon deposits. Be careful not to scuff or nick metal surfaces when decarboning. The same applies to valves and valve seats, too.

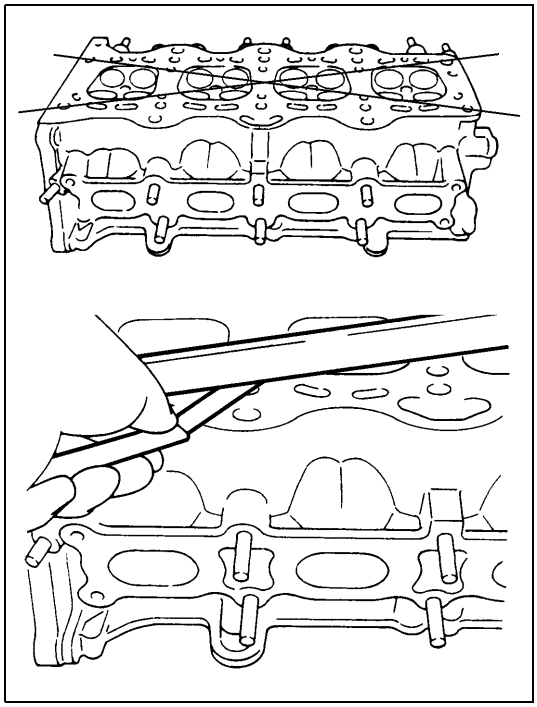

- Check cylinder head for cracks on intake and exhaust ports, combustion chambers, and head surface.
  Using a straightedge and thickness gauge, check flatness of gasketed surface at a total of 2 locations. If distortion limit, given below, is exceeded, replace cylinder head.

Limit of distortion for surface of cylinder head piston side:
0.05 mm (0.00197 in.)

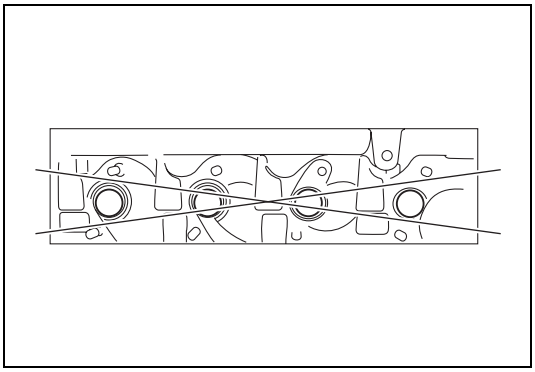

- Distortion of manifold seating faces:
  Check seating faces of cylinder head for manifolds, using a straightedge and thickness gauge, in order to determine whether these faces should be corrected or cylinder head replaced.

Limit of distortion for surface of cylinder head exhaust: manifolds sides
0.2 mm (0.008 in.)

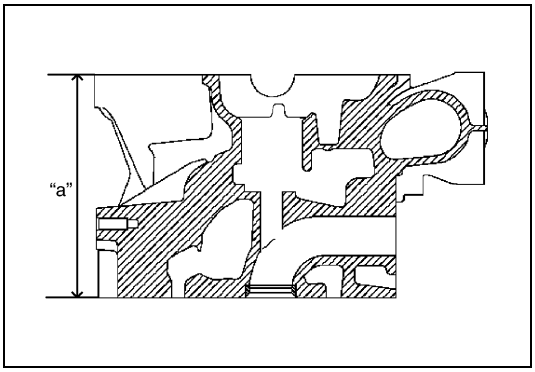

- Measure cylinder head height "a".
  If measured height is below its specification, replace cylinder head.

Cylinder head height
"a": 127 mm (5.00 in.)

Valve Springs

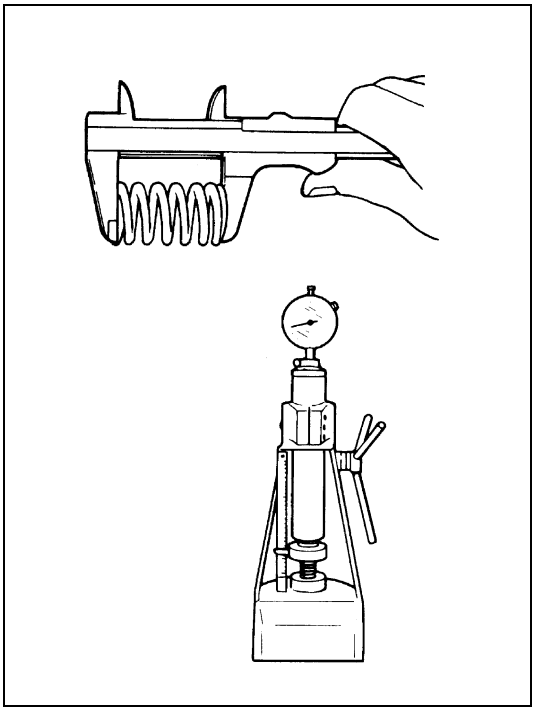

- Referring to data given below, check to be sure that each spring is in sound condition, free of any evidence of breakage or weakening. Remember, weakened valve springs can cause chatter, not to mention possibility of reducing power output due to gas leakage caused by decreased seating pressure.

Valve spring free length (In and Ex) "a":
43.31 mm (1.7051 in.)

Valve spring preload (In and Ex):
23 N (2.3 kg) for 33.80 mm (5.0 lb/ 1.3307 in.)
50 N (5.0 kg) for 24.80 mm (11.0 lb/ 0.9764 in.)

Max. Valve Lift

1) Install valve, tappet and camshaft referring to "Install" under "Valves and cylinder Head Removal and Installation" in this section.

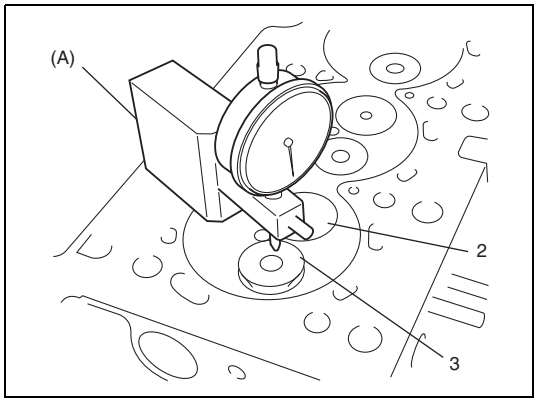

2) Measure valve lift using dial gauge as shown in figure.
If measured valve lift is found to exceed its limit, adjust valve lash (clearance) referring to “Valve Lash (Clearance)” in this section.

Special tool
(A): 09910-26510/OUT 0000005

Max. valve lift
In: 8.015 mm (0.31555 In.)
Ex: 8.595 mm (0.33839 In.)

Pistons, Piston Rings, Connecting Rods and Cylinders Components

CAUTION:
Connecting rod and connecting rod bearing must be replaced as a set when either replacement becomes necessary.

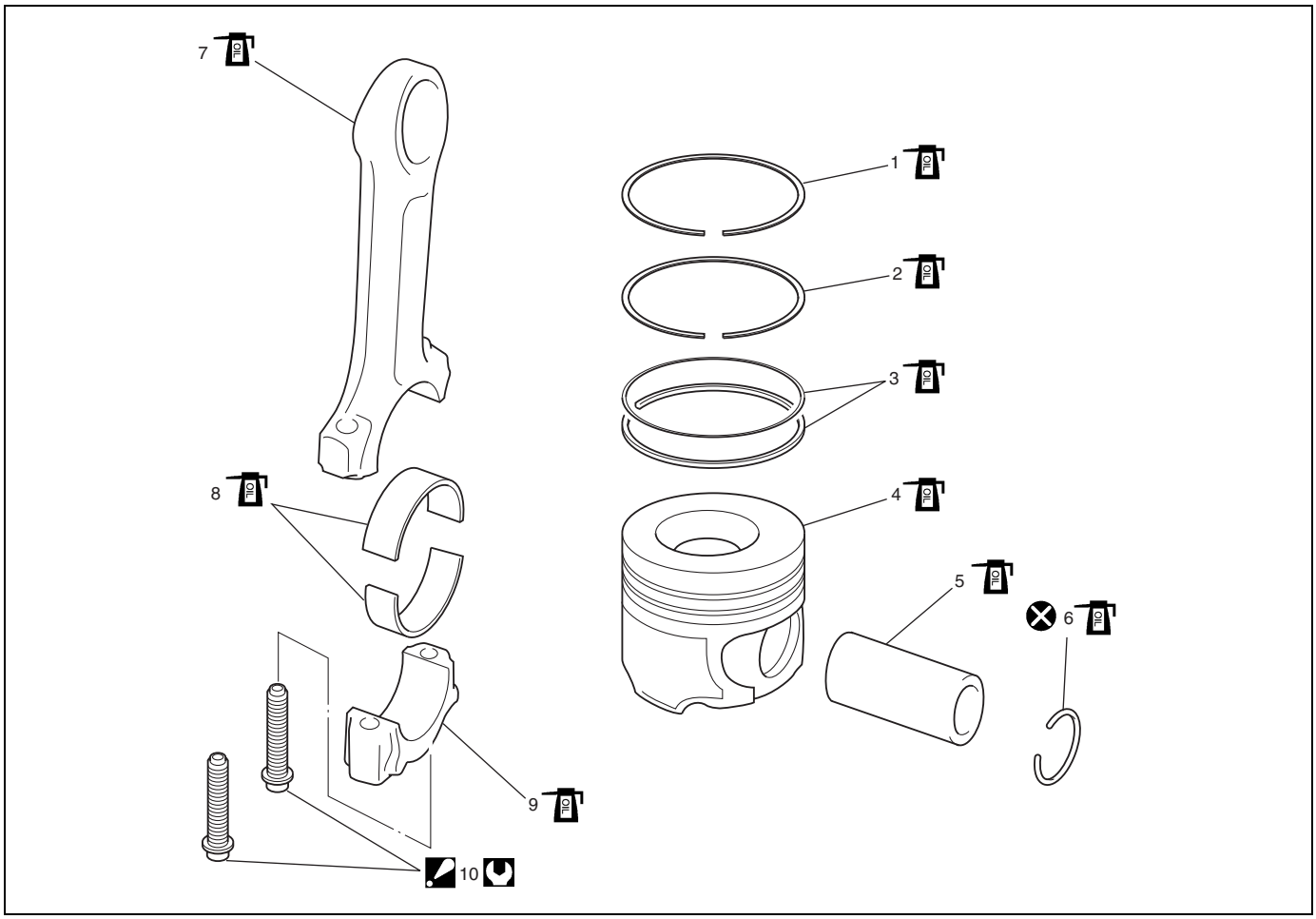

1. Top ring	5. Piston pin	9. Connecting rod bearing cap	Do not reuse.
2. 2nd ring	6. Piston pin circlip	10. Connecting rod bearing cap bolt : Tighten 20 N·m (20 kg-m, 14.5 lb-ft) and 45° by the specified procedure.	
3. Oil ring	7. Connecting rod	Tightening Torque	
4. Piston	8. Connecting rod bearing	Apply engine oil to sliding surface of each parts.	

Pistons, Piston Rings, Connecting Rods and Cylinders Removal and Installation

CAUTION:
Connecting rod and connecting rod bearing must be replaced as a set when either replacement becomes necessary.

Removal

1) Remove engine assembly from vehicle referring to “Engine Assembly Removal and Installation” in this section.
2) Remove cylinder head referring to “Valves and Cylinder Head Removal and Installation” in this section.
3) Remove upper oil pan referring to “Oil Pan and Oil Pump Strainer Removal and Installation” in this section.
4) Remove oil pump referring to “Oil Pump and Oil Pump Chain Removal and Installation” in this section.

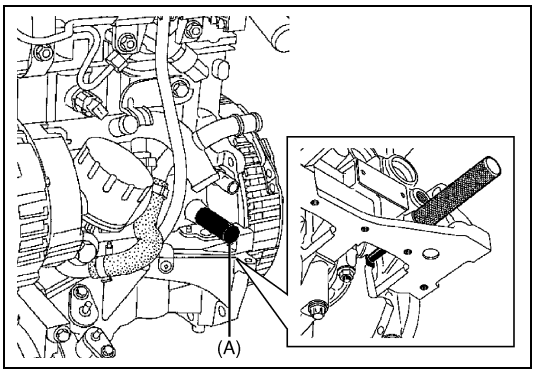

5) Remove special tool (A).

Special tool
(A): 09919-58110

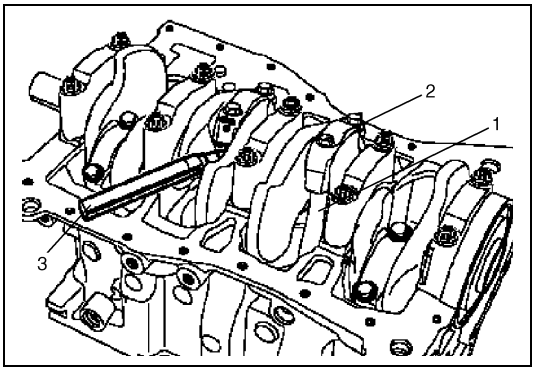

6) Mark cylinder number on all pistons, connecting rods (1) and rod bearing caps (2) using silver pencil or quick drying paint (3) for installation.
7) Remove connecting rod bearing caps.
8) Decarbon top of cylinder bore before removing piston from cylinder.
9) Push piston and connecting rod assembly out through the top of cylinder bore.

Installation

NOTE:

- **All parts to be installed must be perfectly clean.**
- **Main bearings, main bearing caps, connecting rods, connecting rod bearings, rod bearing caps, pistons and piston rings are in combination sets. Do not disturb such combination and make sure that each part goes back to where it came from, when installing.**

1) Apply engine oil to pistons, rings, cylinder walls, connecting rod bearings and crankpins.

NOTE:

Do not apply oil between connecting rod and bearing or between bearing cap and bearing.

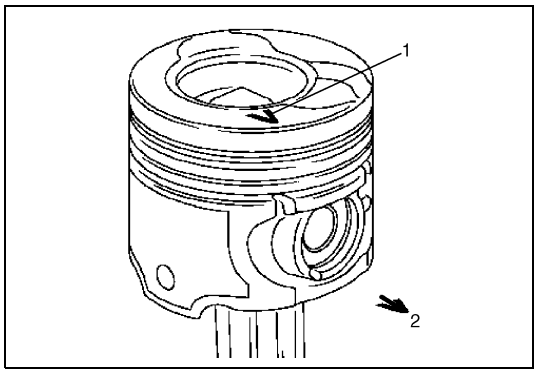

2) When installing piston and connecting rod assembly into cylinder bore, point arrow mark (1) on piston head to flywheel side (2).

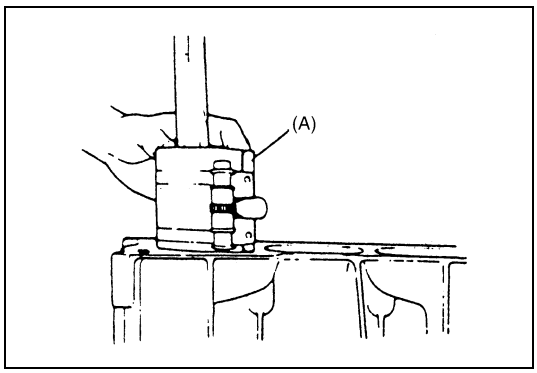

3) Install piston and connecting rod assembly into cylinder bore matching cylinder number marked in removal. Use special tool (Piston ring compressor) to compress rings. Guide connecting rod into place on crankshaft.
Using a hammer handle, tap piston head to install piston into bore. Hold ring compressor firmly against cylinder block until all piston rings have entered cylinder bore.

Special tool
(A): 09916-77310

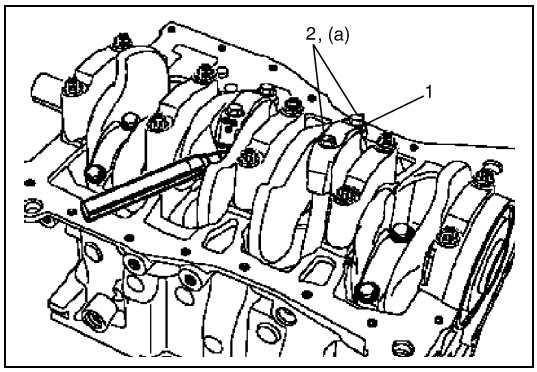

4) Install bearing cap (1) to applicable cylinder matching cylinder number marked in removal.
a) Tighten all cap bolts (2) to 20 N·m (2.0 kg-m, 14.5 lb-ft).
b) Retighten them by turning through 45°.

Tightening torque
Connecting rod bearing cap bolt (a):
Tighten 20 N·m (2.0 kg-m, 14.5 lb-ft) and 45° by the specified procedure

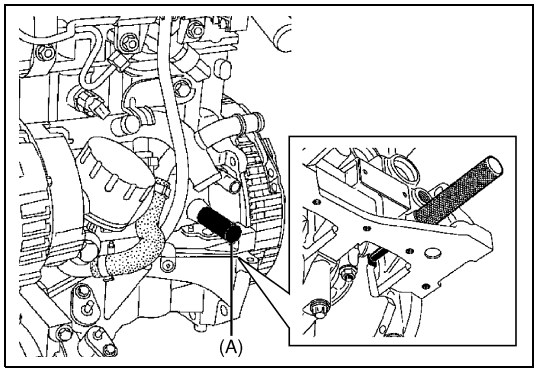

5) Insert special tool into TDC pin hole as shown in figure.
And turn crankshaft clockwise until crankshaft touches special tool.

Special tool
(A): 09919-58110

6) Install oil pump referring to “Oil Pump and Oil Pump Chain Removal and Installation” in this section.

7) Install oil pan and oil level gauge referring to “Oil pan and Oil Pump Strainer Removal and Installation” in this section.

8) Install cylinder head referring to “Valves and Cylinder Head Removal and Installation” in this section.
9) Install engine assembly to vehicle referring to “Engine Assembly Removal and Installation” in this section.

Pistons, Piston Rings, Connecting Rods and Cylinders Disassembly and Reassembly

Disassembly

1) Using piston ring expander, remove top and 2nd compression rings and oil ring from piston.

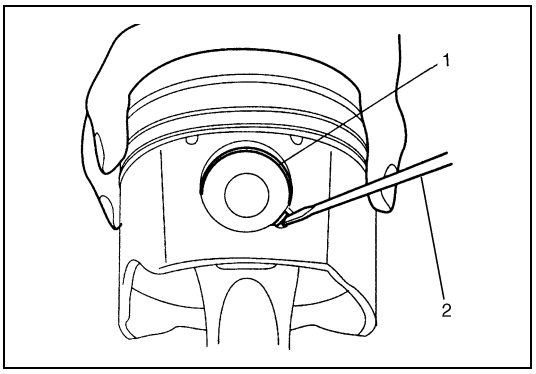

2) Remove piston pin from connecting rod as follows.
   a) Using flat head screw driver (2) or the like, remove piston pin circlips (1) as shown.

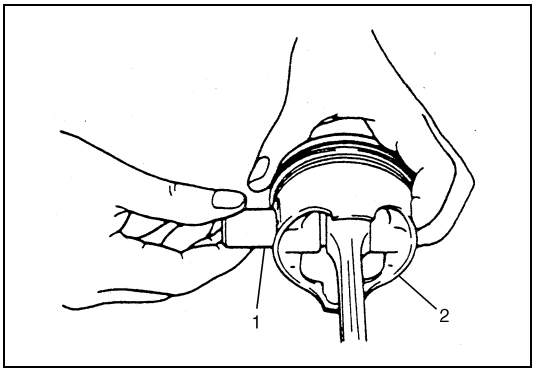

   b) Remove piston pin (1) from piston (2).

Reassembly

NOTE:

Whenever piston is replaced, select applicable piston referring to “Selection of Piston” under “Pistons, Piston Rings, Connecting Rods and Cylinder Inspection” in this section.

1) Clean carbon from piston head and ring grooves using a suitable tool.

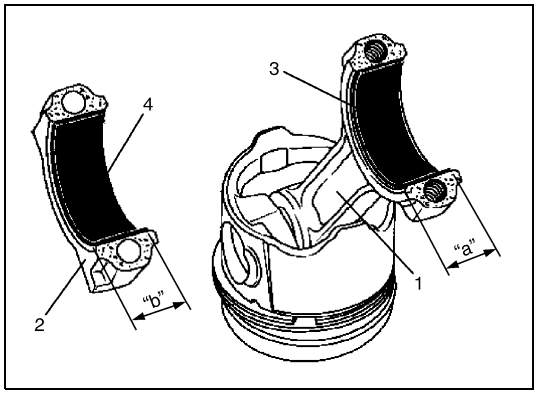

2) Install connecting rod bearings (3) to connecting rod (1) and bearing cap (2) as follows.
   a) Distinguish connecting rod bearing between connecting rod side connecting rod bearing and bearing side connecting rod bearing (4) measuring its width before installing.

Connecting rod side connecting rod bearing width "a":
20.500 – 20.750 mm (0.80709 – 0.81692 in.)

Bearing cap side connecting rod bearing width "b":
17.500 – 17.750 mm (0.68898 – 0.69881 in.)

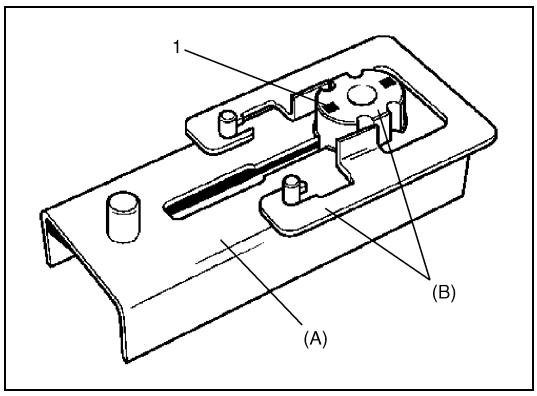

   b) Install special tool (B) to special tool (A).

NOTE:

Be sure to install special tool (B) to specified direction as shown.

Special tool
(A): 09913-98110
(B): 09913-88110

1. Mark "B"

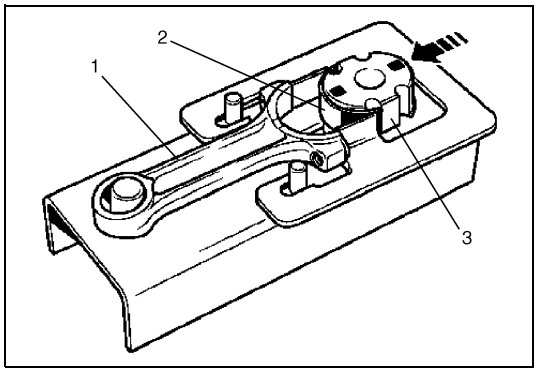

   c) Install connecting rod (1) and connecting rod bearing to special tool (A and B) as shown.
   d) Install connecting rod bearing to connecting rod pushing special tool (B) as shown.

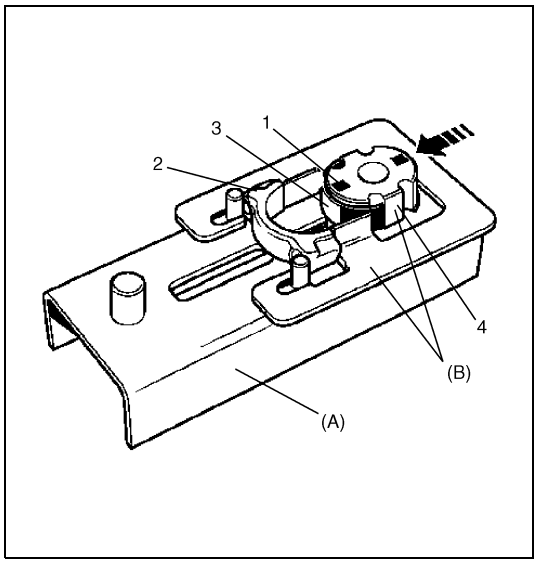

   e) Install special tool (B) to special tool (A).

NOTE:

Be sure to install special tool (B) to specified direction as shown.

Special tool
(A): 09913-98110
(B): 09913-88110

   f) Install bearing cap (2) and connecting rod bearing to special tool (A and B) as shown.
   g) Install connecting rod bearing to bearing cap pushing special tool (B) as shown.

1. Mark "A"

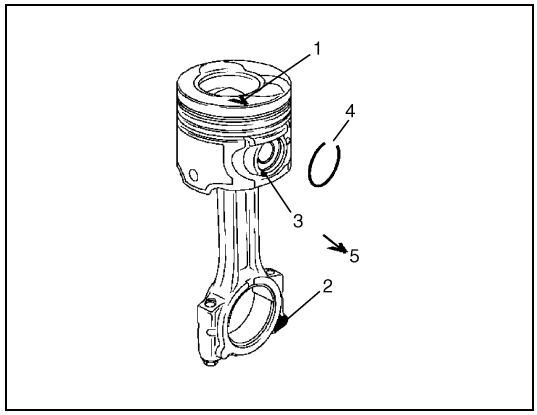

3) Install piston pin to piston and connecting rod as follows.
   a) After applying engine oil to piston pin and piston pin holes in piston and connecting rod, fit connecting rod to piston so that flat part (2) of connecting rod bearing and arrow mark (1) come on the same side, and insert piston pin to piston and connecting rod.
   b) Install piston pin circlips.
   c) Position opening of piston pin circlip to opposite side of removal and fitting channel (4).

5. Flywheel side

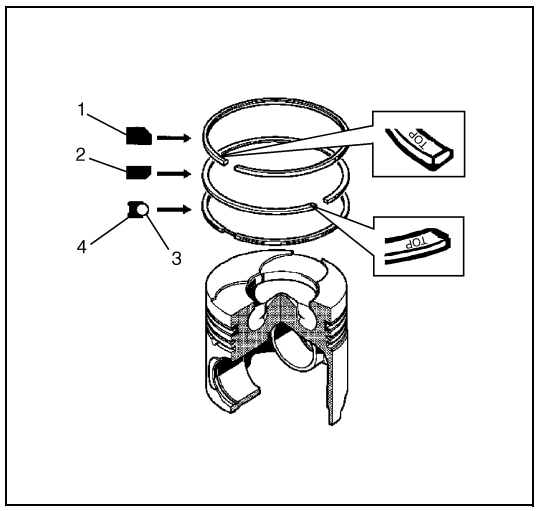

4) Install piston rings to piston noting the following.

NOTE:

- **As indicated in figure, 1st and 2nd rings have "TOP" mark respectively. When installing these piston rings to piston, direct marked side of each ring toward top of piston.**
- **1st ring (1) differs from 2nd ring (2) in thickness and shape.**
  Distinguish 1st ring from 2nd ring by referring to figure.
- **When installing oil ring, install spiral ring (3) first and then rail (4).**

Pistons, Piston Rings, Connecting Rods and Cylinders Inspection

Cylinders

- Inspect cylinder walls for scratches, roughness or ridges which indicate excessive wear. If cylinder bore is very rough, deeply scratched or ridged, replace cylinder block.

Pistons

- Inspect piston for faults, cracks or other damaged.
  Damaged or faulty piston should be replaced.

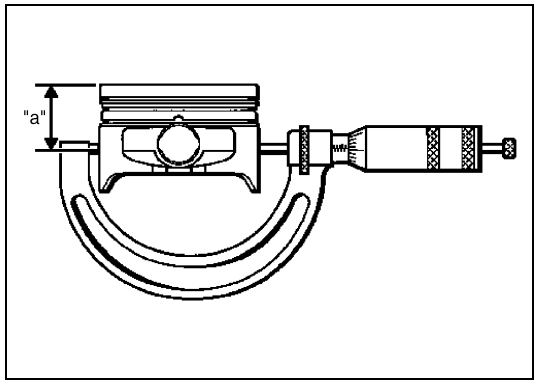

- Piston diameter:
  As indicated in figure, piston diameter should be measured at a position "a" from piston top in the direction perpendicular to piston pin.

Piston diameter specification:
75.938 – 75.952 mm (2.98969 – 2.99023 in.)

"a": 56.0 mm (2.205 in.)

Piston Pin

- Check piston pin, connecting rod small end bore and piston bore for wear or damage, paying particular attention to condition of small end bore bush. If pin, connecting rod small end bore or piston bore is badly worn or damaged, replace pin, connecting rod and/or piston.

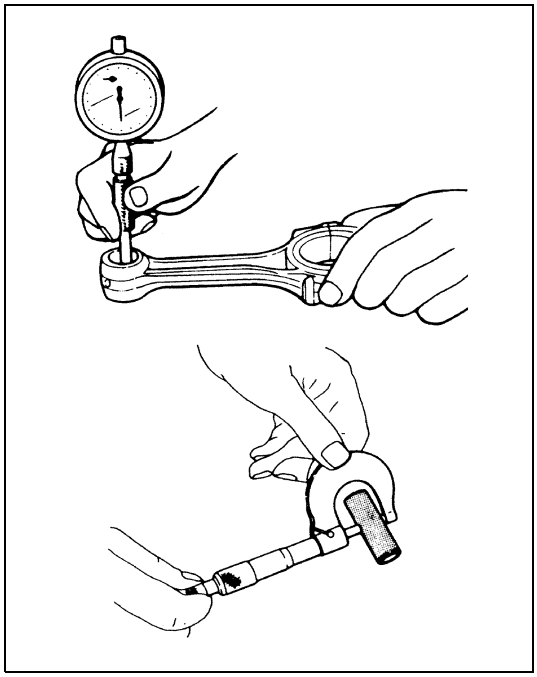

- Piston pin clearance:
  Check piston pin clearance in small end and piston. Replace connecting rod and/or piston if its small-end is badly worn or damaged or if measured clearance out of specification.

Clearance between small-end and piston pin:
0.013 – 0.030 mm (0.00052 – 0.00118 in.)

Small-end bore for connecting rod:
26.013 – 26.025 mm (1.02414 – 1.02460 in.)

Piston pin outside diameter:
25.995 – 26.000 mm (1.02343 – 1.02362 in.)

Piston Rings

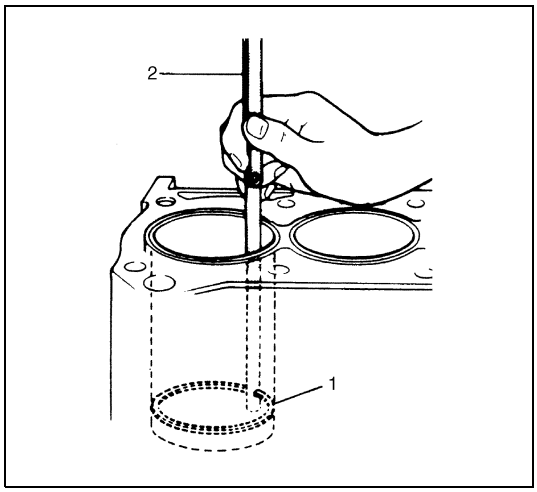

- Piston ring end gap
  To measure end gap, insert piston ring (1) into cylinder bore and then measure the gap by using thickness gauge (2).
  If measured gap is out of specification, replace ring.

NOTE:

Decarbonize and clean top of cylinder bore before inserting piston ring.

Piston ring end gap
Top ring: 0.20 – 0.35 mm (0.0079 – 0.0137 in.)
2nd ring: 0.70 – 0.90 mm (0.0276 – 0.0354 in.)
Oil ring: 0.25 – 0.50 mm (0.0099 – 0.0196 in.)

- Piston ring thickness
  Measure piston ring thickness. If measured thickness is out of specification, replace piston ring.

Piston ring thickness
Top ring: 1.97 – 1.99 mm (0.0776 – 0.0783 in.)
2nd ring: 1.97 – 1.99 mm (0.0776 – 0.0783 in.)
Oil ring: 2.47 – 2.49 mm (0.0973 – 0.0980 in.)

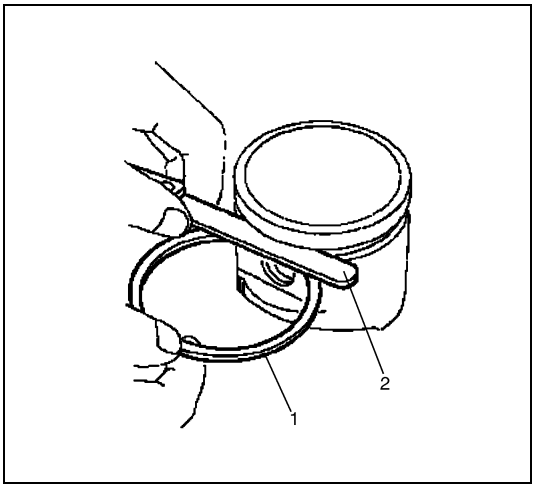

- Ring groove clearance
  Before checking, piston grooves must be clean, dry and free of carbon.
  Fit new piston ring (1) into piston groove, and measure clearance between ring and ring land by using thickness gauge (2).
  If clearance is out of specification, replace piston.

Ring groove clearance
clearance
Top ring: 0.10 – 0.12 mm (0.0040 – 0.0047 in.)
2nd ring: 0.08 – 0.10 mm (0.0032 – 0.0039 in.)
Oil ring: 0.03 – 0.05 mm (0.0012 – 1.2700 in.)

Connecting Rod

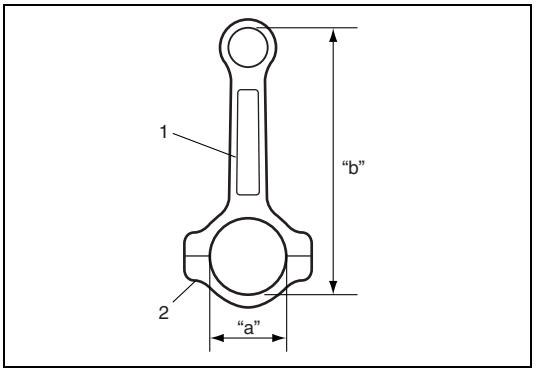

- Connecting rod big end bore and length.

a) Install bearing cap (2) to connecting rod (1).
b) Measure connecting rod big end bore and length.
   If measured bore and length is out of specification, replace connecting rod.

Big end bore "a":
47.610 – 47.628 mm (1.87441 – 1.87511 in.)

Connecting rod length "b":
170.56 – 170.57 mm (6.7150 – 6.7153 in.)

- Connecting rod big end thrust play

a) Install connecting rod referring to "Installation" under "Pistons, Piston Rings, Connecting rods and Cylinders" in this section.

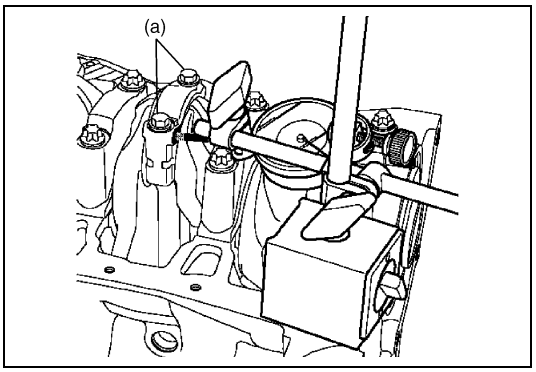

b) Check big-end of connecting rod for thrust play with rod fitted and connected to its crank pin in the normal manner.
   If measured thrust play is out of specification, replace connecting rod.

Connecting rod big end thrust play:
0.205 – 0.467 mm (0.00807 – 0.01838 in.)

Crank Pin and Connecting Rod Bearings

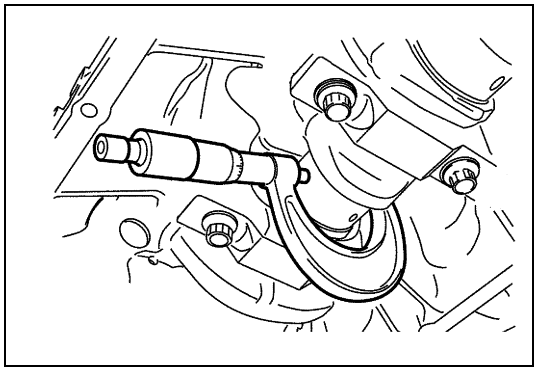

- Inspect crank pin for uneven wear or damage. Measure crank pin for crank pin diameter using a micrometer. If crank pin is damaged or crank pin diameter is out of specification, replace crankshaft.

Crank pin diameter:
43.960 – 43.980 mm (1.73071 – 1.73150 in.)

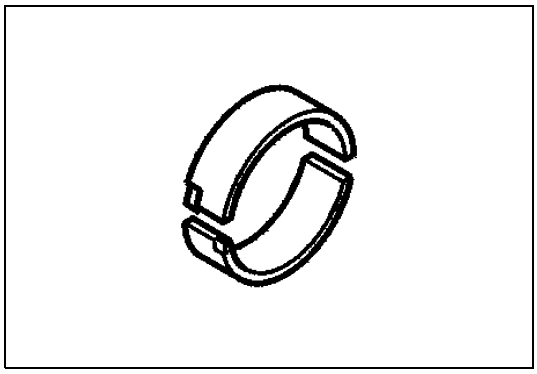

- Rod bearing:
  Inspect bearing shells for signs of fusion, pitting, burn or flaking and observe contact pattern. Bearing shells found in defective condition must be replaced.

- Rod bearing clearance:

NOTE:

Do not rotate crankshaft while gauging plastic is installed.

a) Before checking bearing clearance, clean bearing and crank pin.
b) Install bearing in connecting rod and bearing cap referring to “Reassembly” under “Pistons, Piston Rings, Connecting Rods and Cylinders Disassembly and Reassembly” in this section.

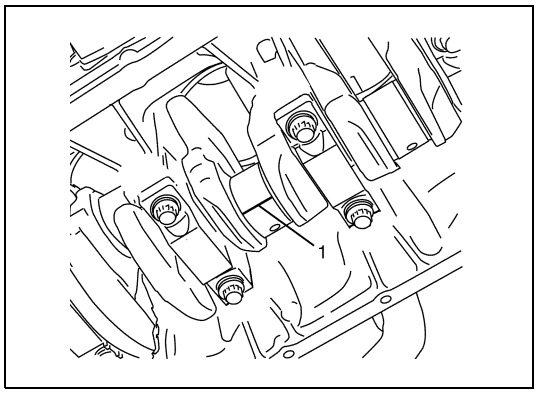

c) Place a piece of gauging plastic (1) to full width of crank pin as contacted by bearing (parallel to crankshaft), avoiding oil hole.
d) Install connecting rod and bearing cap referring to “Installation” under “Pistons, Piston Rings, Connecting rods and Cylinders” in this section.

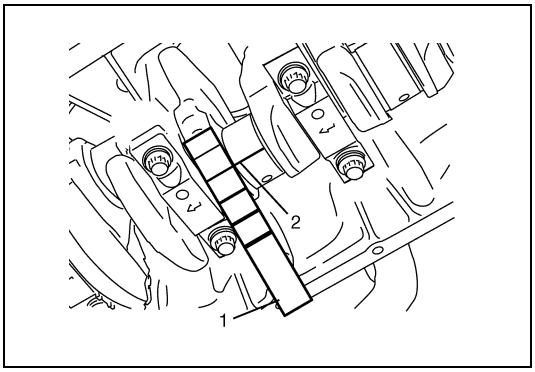

e) Using a scale (1) on gauging plastic (2) envelope, measure gauging plastic width at the widest point (clearance) after removing cap.
If clearance is out of specification, use a new bearing and remeasure clearance.

Connecting rod bearing clearance:
0.010 – 0.064 mm (0.0004 – 0.0025 in.)

Piston Protrusion

1) Install piston and connecting rod referring to “Installation” under “Pistons, Piston Rings, Connecting rods and Cylinders” in this section.

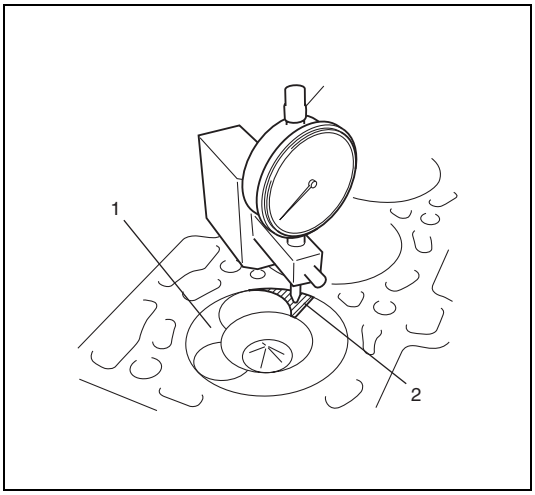

2) Using special tool and dial gauge, measure piston protrusion at specified measurement position (2) as shown in figure when piston (1) reaches top dead center. Repeat this procedure with each piston.
If piston protrusion is out of specification, proceed to next step.

Piston protrusion “a”:
0.030 – 0.288 mm (0.00119 – 0.01133 in.)

3) Check connecting rod length referring to “Connecting Rod” under “Piston, Piston Rings, Connecting Rod and Cylinders Inspection” in this section.
If connecting rod is normal, proceed to next step.

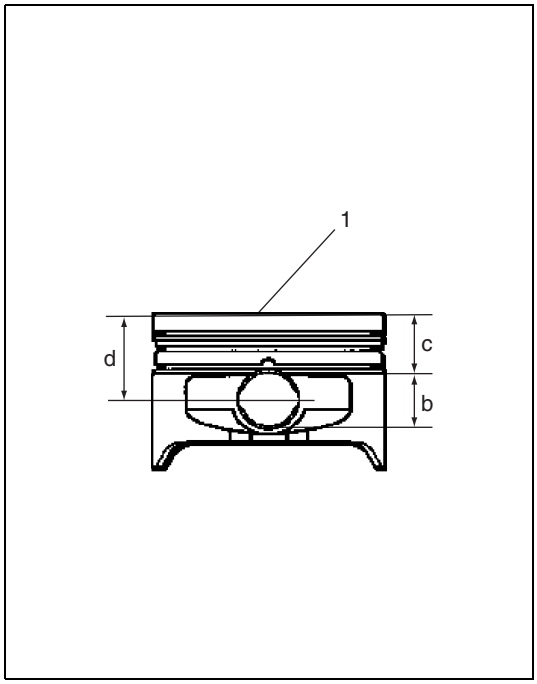

4) Replace piston (1) as follows in order to adjust piston protrusion to specified value.
   a) Remove piston, and measure the following specification.
   - Piston pin diameter "b"
   - Distance "c" between top of piston and top of piston pin hole

   b) Obtain distance "d" between top of piston and center of piston pin hole by the following equation.

"d"= "b"/2 + "c"

   c) Using measured piston protrusion "a" at step 2), obtain adjusting distance "e'" by the following equation.

"e" = "d" + 0.159 mm (0.0063 in.) – "a"

Example:
When distance "d" of removed piston is 41.620 mm (1.63858 in.), and measured piston protrusion "a" is 0.020 mm (0.0008 in.).
Calculated adjusting distance "e" = 41.620 mm (1.63965 in.) + 0.159 mm (0.0307 in.) – 0.020 mm (0.0008 in.) = 41.759 mm (1.64406 in.)

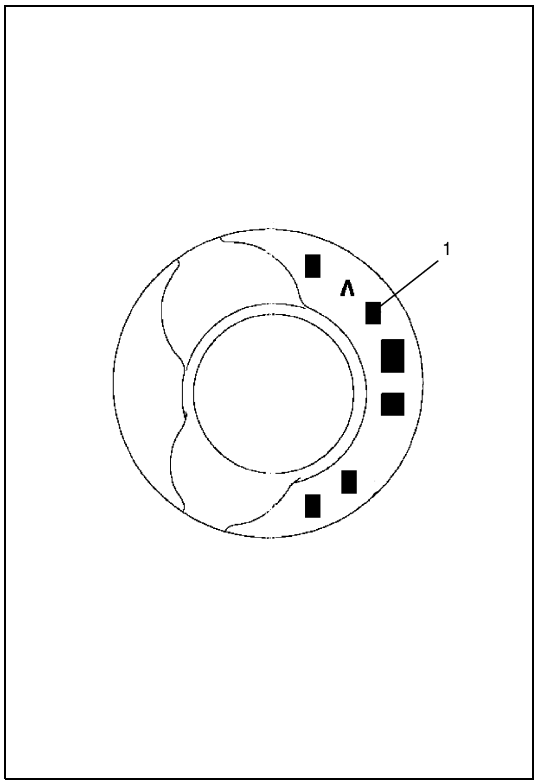

   d) Select new piston so that distance "e" is within range of distance "d" of new piston.

Piston class specification

Piston class (1)	Distance "d"
J	41.605 – 41.645 mm (1.63800 – 1.64122 in.)
K	41.674 – 41.687 mm (1.63965 – 1.64287 in.)
L	41.689 – 41.729 mm (1.64130 – 1.64287 in.)
M	41.731 – 41.771 mm (1.64296 – 1.64452 in.)
N	41.773 – 41.813 mm (1.64461 – 1.64618 in.)

NOTE:
- **Piston class (1) is marked on piston top as shown in figure.**
- **Supplied piston is only K, L and M classes.**
  If selected piston is J class, K class piston must be installed as a replacement.
  If selected piston is N class, M class piston must be installed as a replacement.

   e) Replace removed piston to selected piston.
   f) Check piston protrusion, again.

Main Bearings, Crankshaft and Cylinder Block Components

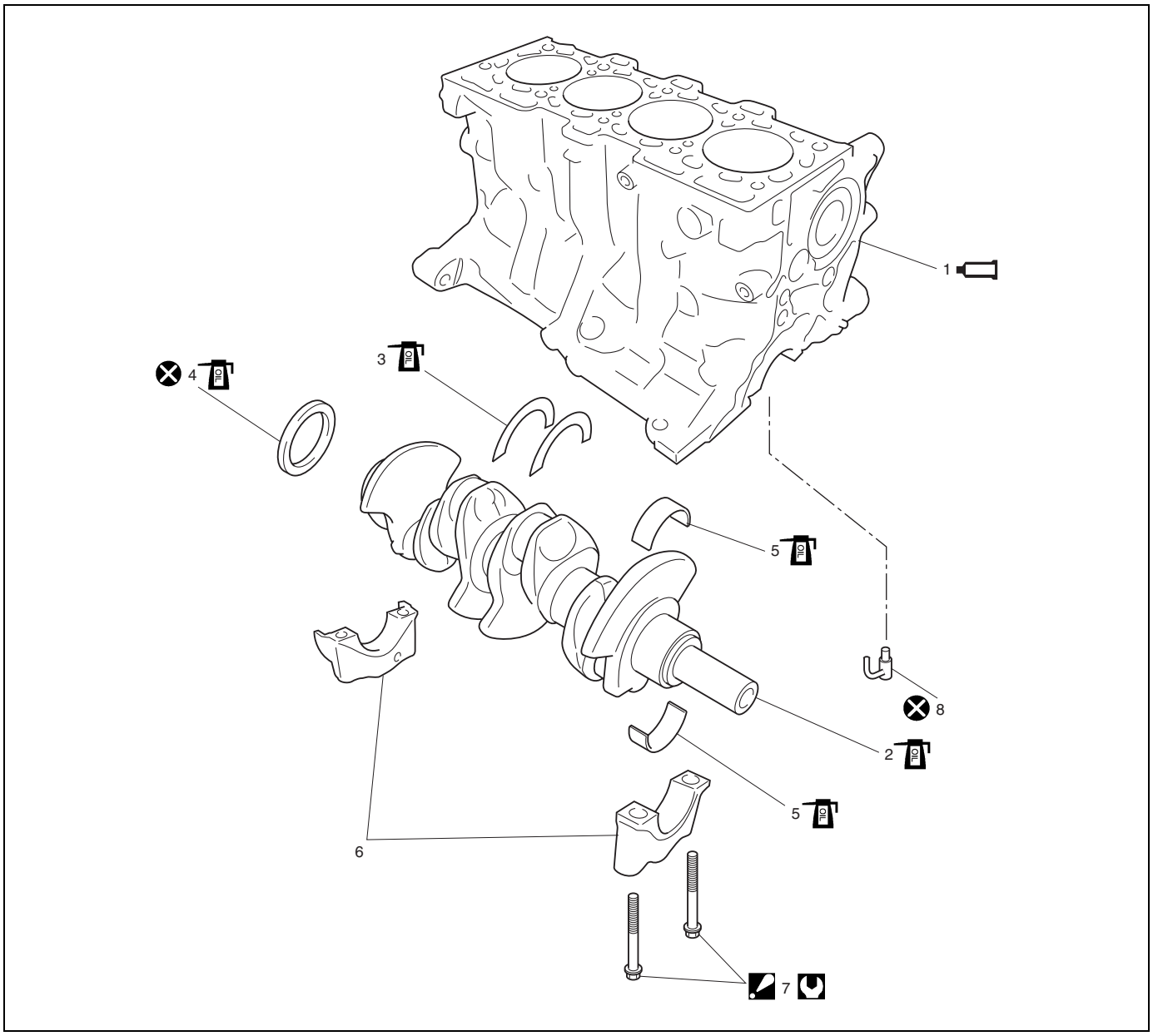

1. Cylinder block : Apply RHODOSEAL 5661® referring to “Installation” under “Main Bearings, Crankshaft and Cylinder Block Removal and Installation”.	5. Main bearing : Apply engine oil to bearing inside surfaces.	Tightening Torque
2. Crankshaft : Apply engine oil to sliding surface.	6. Main bearing cap	Do not reuse.
3. Thrust bearing : Apply engine oil to sliding surface.	7. Main bearing cap bolt : Tighten 25 N·m (2.5 kg-m, 18.0 lb-ft) and 47° by the specified procedure.	
4. Flywheel side crankshaft oil seal : Apply engine oil to oil seal lip.	8. Oil jet	

Main Bearings, Crankshaft and Cylinder Block Removal and Installation

Removal

1) Remove engine assembly from vehicle referring to “Engine Assembly Removal and Installation” in this section.
2) Remove oil pan and oil pump strainer referring to “Oil Pan and Oil Pump Strainer Removal and Installation” in this section.
3) Remove exhaust manifold referring to “Exhaust Manifold Removal and Installation” in this section.
4) Remove cylinder head cover referring to “Cylinder Head Cover Removal and Installation” in this section.
5) Remove timing belt, belt tensioner, crankshaft pulley and timing belt cover referring to “Timing Belt and Belt Tensioner Removal and Installation” in this section.
6) Remove heat exchanger referring to “Heat Exchanger Removal and Installation” in this section.
7) Remove oil pump, oil pump drive sprocket and gasket holder plate referring to “Oil Pump Removal and Installation” in this section.
8) Remove power steering pump referring to “Power Steering (P/S) Pump” in Section 3B1.
9) Remove camshaft referring to “Camshaft and Tappet Removal and Installation” in this section.
10) Remove cylinder head assembly referring to “Valve and Cylinder Head Removal and Installation” in this section.
11) Remove piston and connection rod referring to “Piston, Piston Rings, Connecting Rods, Connecting Rods and Cylinders Removal and Installation” in this section.
12) Remove clutch cover, clutch disc and flywheel referring to “Clutch Cover, Clutch Disc, Flywheel and Release Bearing Removal and Installation” in Section 7C2.

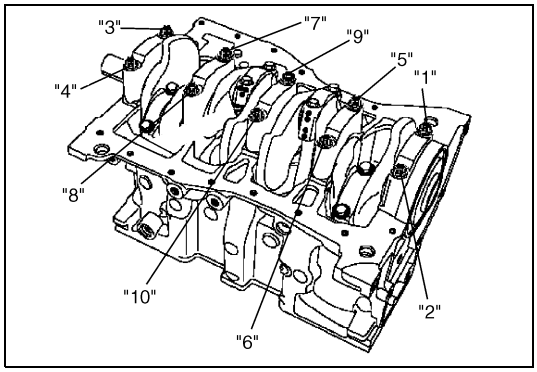

13) Loosen crankshaft bearing cap bolts in such order as indicated in figure a little at a time, and remove bearing caps.
14) Remove crankshaft from cylinder block.
15) Remove flywheel side crankshaft oil seal from crankshaft.

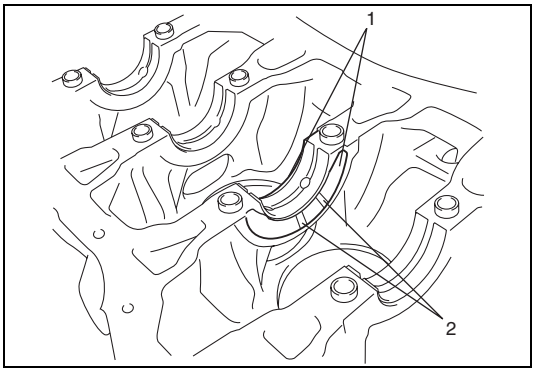

16) Remove main bearings (1) and thrust bearings (2).

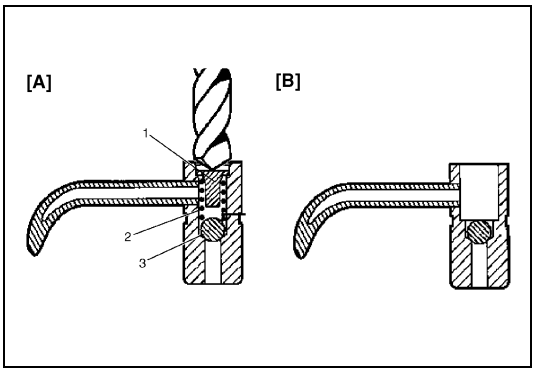

17) Remove oil jet as follows, if necessary.
   a) Pack rag into cylinder to prevent swarf from entering.
   b) Remove spring stop (1) and spring (2) using 7 mm (0.28 in.) diameter drill (4).

CAUTION:
Do not remove ball (3) to prevent swarf from entering cooling circuit.

   c) Desorb swarf from cylinder and oil jet.

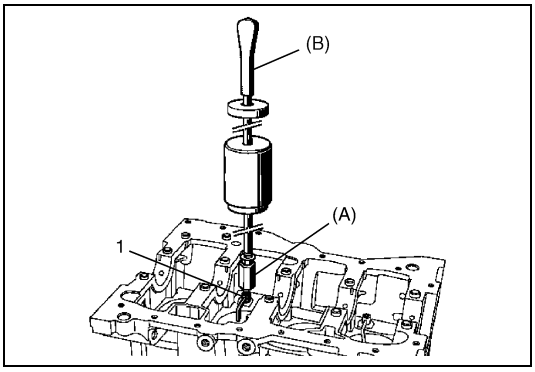

   d) Install special tool (A) to drilled hole of oil jet (1).
   e) Remove oil jet from cylinder using special tools (A and B).

Special tool
(A): 09916-48120
(B): 09916-58120

Installation

NOTE:

- **Whenever crankshaft and cylinder block replaced, select applicable piston referring to "Selection of Piston" under "Pistons, Piston Rings, Connecting Rods and Cylinder Inspection" in this section.**
- **All parts to be installed must be perfectly clean.**
- **Be sure to apply oil to crankshaft journals, main bearings and thrust bearings.**
- **Main bearings, main bearing caps, connecting rods, connecting rod bearings, rod bearing caps, pistons and piston rings are in combination sets. Do not disturb such combination and make sure that each part goes back to where it came from, when installing.**

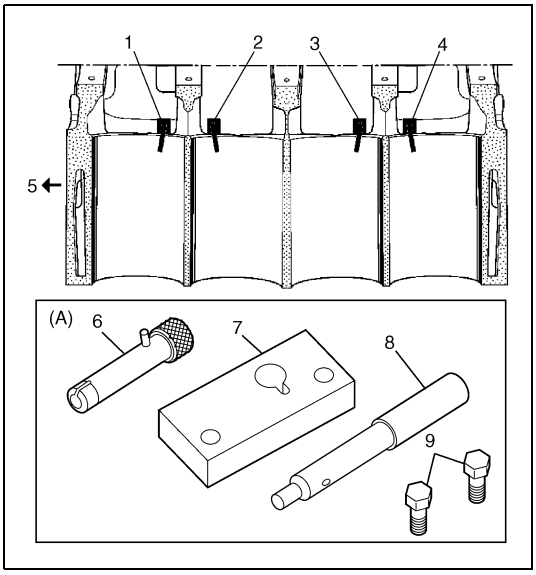

1) Using special tool, install oil jet to cylinder block as follows, if removed.

Special tool
(A): 09916-58110

1.	Oil jet No.1
2.	Oil jet No.2
3.	Oil jet No.3
4.	Oil jet No.4
5.	Flywheel side
6.	Push rod
7.	Plate
8.	Guide rod
9.	Plate bolt

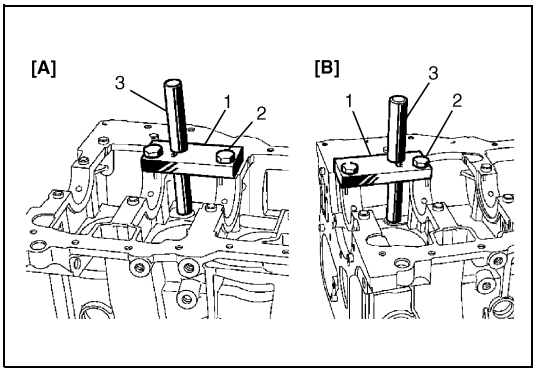

a) Install plate (1) to cylinder block tightening plate bolts (2) by hand.
b) Install guide rod (3) to plate aligning guide rod end with oil jet hole.
c) Tighten plate bolts, and remove guide rod.

[A]:	Oil jet No.2 and 4
[B]:	Oil jet No.1 and 3

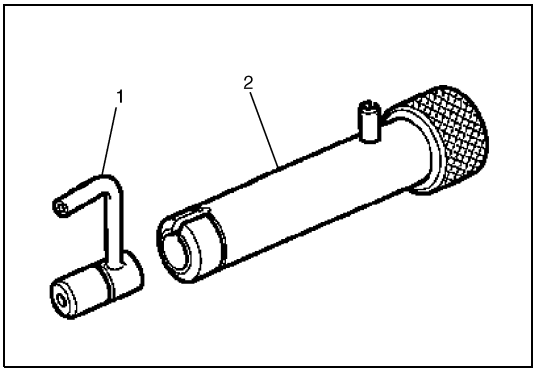

d) Insert oil jet (1) into push rod (2) facing oil jet with center of cylinder.

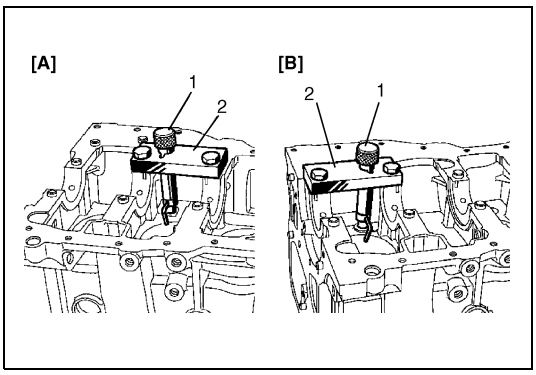

e) Using hammer, tap push rod until push rod (1) comes into contact with plate (2).
f) Remove special tool.

[A]:	Oil jet No.2 and 4
[B]:	Oil jet No.1 and 3

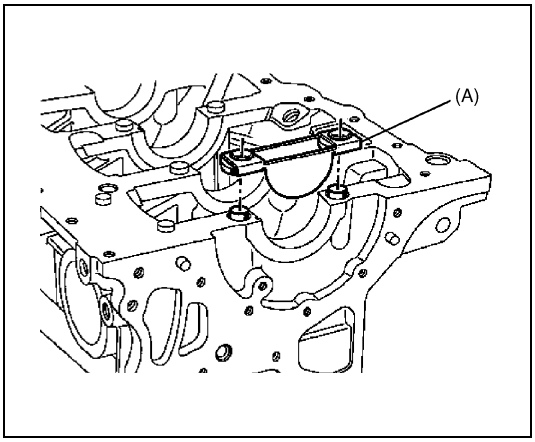

2) Using special tool, install main bearing to cylinder block and bearing cap as follows.

NOTE:

One of two halves of main bearing has oil groove. Install main bearing with oil grove to cylinder block, and the other one without oil groove to bearing cap.

Special tool
(A): 09913-78110

a) Install special tool (A) to cylinder block.

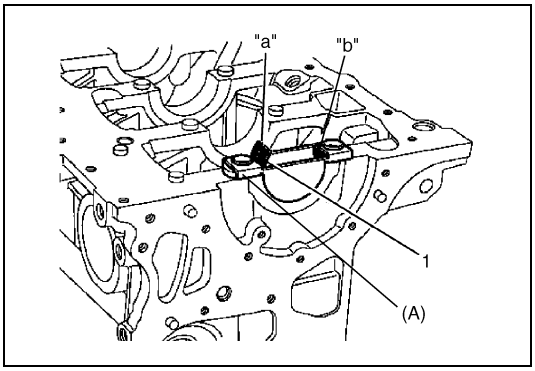

b) Fit main bearing (1) in special tool (A) as shown, and then press at “a” until main bearing is touched at “b”.

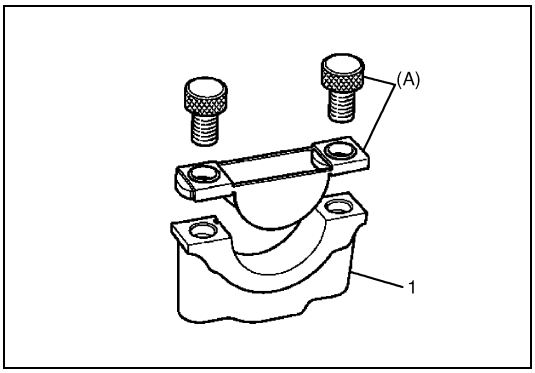

c) Install special tool (A) to bearing cap (1).

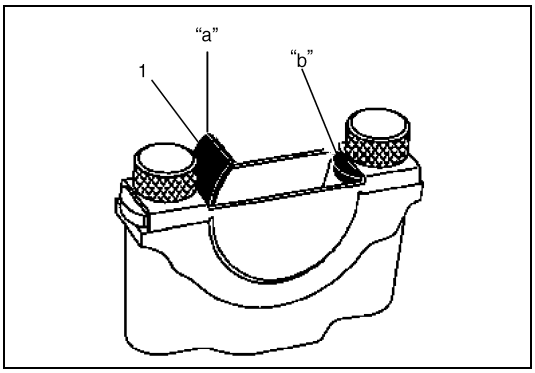

d) Fit main bearing (1) in special tool (A) as shown, and then press at “a” until main bearing is touched at “b”.

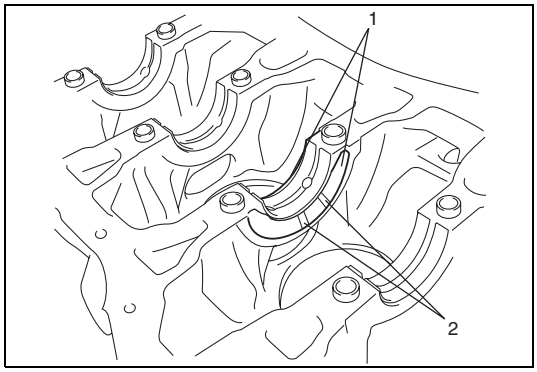

3) Install thrust bearings (1) to center of crankshaft journal facing its oil groove (2) to outside.
4) Install crankshaft to cylinder block.

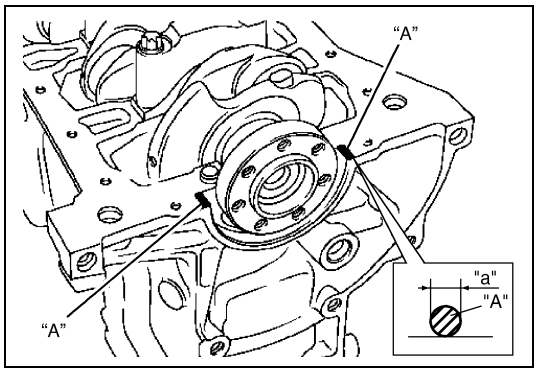

5) Apply sealant to cylinder block as shown in figure.

"A": RHODORSEAL 5661®

"a": 4 mm (0.16 in.)

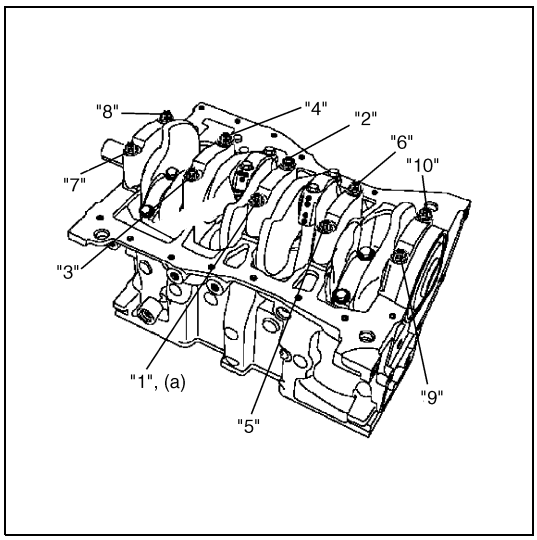

6) Install main bearing caps in proper position matching cylinder number marked in removal.
7) Tighten main bearing cap bolts as follows.
   a) Tighten bolts to 25 N·m (2.5 kg-m, 18.0 lb-ft).
   b) Retighten them by turning through 47°.

Tightening torque
Main bearing cap bolt (a):
Tighten 25 N·m (2.5 kg-m, 18.0 lb-ft) and 47° by the specified procedure

NOTE:

After tightening cap bolts, check to be sure that crankshaft rotates smoothly.

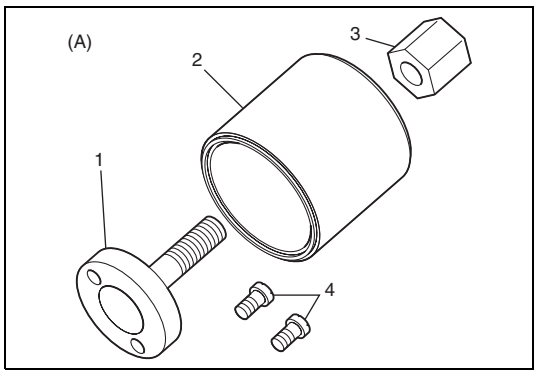

8) Using special tool, install flywheel side oil seal as follows.

CAUTION:

Do not touch oil seal so that it is extremely fragile. Whenever installing new oil seal, it must be installed using special tool (A) and protector supplied with new oil seal. If it doesn't follow the above-mentioned service, it may cause oil leak from oil seal.

Special tool
(A): 09911-98110

1. Fitting
2. Installer
3. Nut
4. Screw

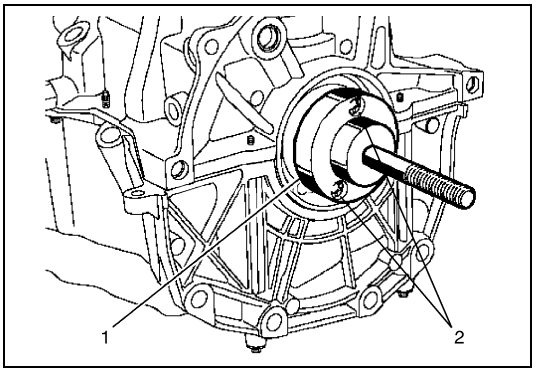

a) Install fitting (1) and screw (2) to crankshaft.

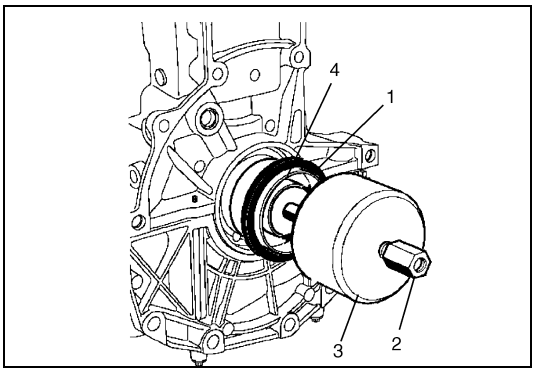

b) Install protector (4) together with new oil seal (1) to fitting by tightening nut (2) until installer (3) comes into contact with cylinder block.
c) Remove special tool and protector.

9) Install piston and connecting rod referring to “Piston, Piston Rings, Connecting Rods and Cylinders Removal and Installation” in this section.
10) Install oil pump, oil pump drive sprocket and gasket holder plate referring to “Oil Pump Removal and Installation” in this section.
11) Install oil pan and oil pump strainer referring to “Oil Pan and Oil Pump Strainer Removal and Installation” in this section.
12) Install cylinder head assembly referring to “Valve and Cylinder Head Removal and Installation” in this section.
13) Install camshaft referring to “Camshaft and Valve Tappet Removal and Installation” in this section.
14) Install timing belt, belt tensioner, crankshaft timing sprocket and timing belt cover referring to “Timing Belt and Belt Tensioner Removal and Installation” in this section.
15) Install cylinder head cover referring to “Cylinder Head Cover Removal and Installation” in this section.
16) Install flywheel referring to “Clutch Cover, Clutch Disc, Flywheel and Release Bearing Removal and Installation” in Section 7C2.
17) Install exhaust manifold referring to “Exhaust Manifold Removal and Installation” in this section.
18) Install turbocharger referring to Turbocharger Removal and Installation” in this section.
19) Install clutch to flywheel referring to “Clutch Cover, Clutch Disc, Flywheel and Release Bearing Removal and Installation” in Section 7C2.

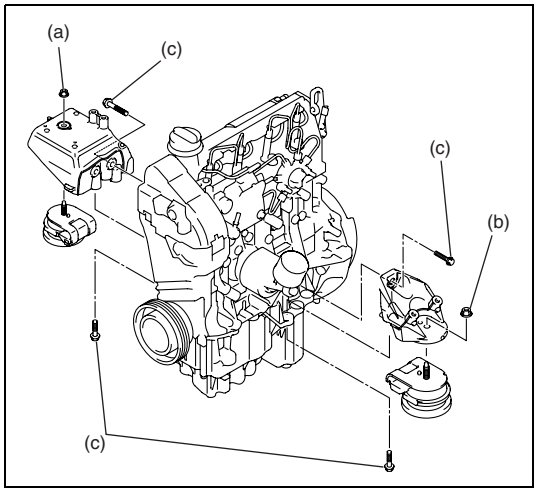

20) Install engine mounting brackets.

Tightening torque
Engine right mounting nut (a):
55 N·m (5.5 kg-m, 40.0 lb-ft)
Engine left mounting nut (b):
40 N·m (4.0 kg-m, 29.0 lb-ft)
Engine side mounting bracket bolt (c):
40 N·m (4.0 kg-m, 29.0 lb-ft)

21) Install engine assembly to vehicle referring to “Engine Assembly” in this section.

Main Bearings, Crankshaft and Cylinder Block Inspection

Crankshaft Thrust Play

1) Install main bearing, thrust bearing, crankshaft and main bearing cap referring to “Main Bearings, Crankshaft and Cylinder Block Removal and Installation” in this section.

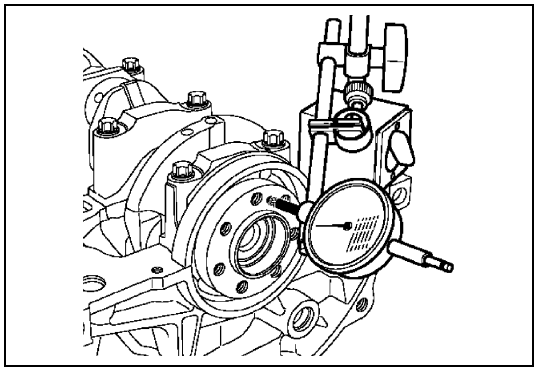

2) Use a dial gauge to read displacement in axial (thrust) direction of crankshaft.
If measured value is out of specification, replace thrust bearing.

Crankshaft thrust play
New thrust bearing:
0.045 – 0.252 mm (0.00178 – 0.00992 in.)

Reused thrust bearing:
0.045 – 0.852 mm (0.00178 – 0.03354 in.)

Crankshaft

Crankshaft journal

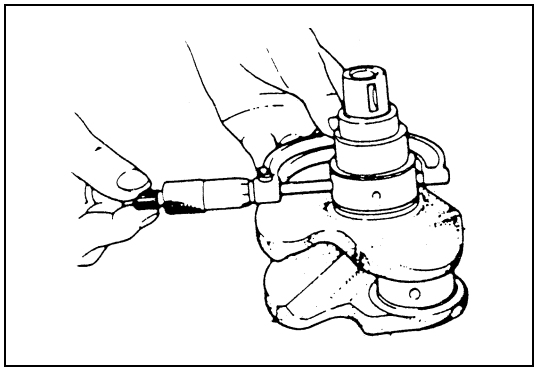

- Inspect crankshaft journal for uneven wear or damage. Measure crankshaft journal diameter using a micrometer. If crankshaft journal is damaged or diameter is out of specification, replace crankshaft.

Crankshaft journal diameter:
47.990 – 48.010 (1.88937 – 1.89015 in.)

Crankshaft journal bore

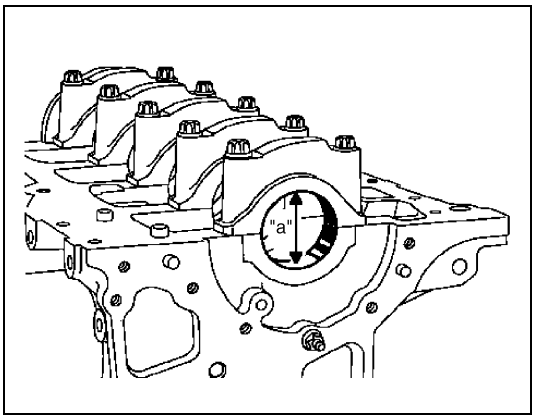

- Inspect crankshaft journal bore for uneven wear or damage. Measure crankshaft journal bore. If crankshaft journal bore is damaged or diameter is out of specification, replace cylinder block.

Crankshaft journal bore diameter "a":
51.936 – 51.949 mm (2.04473 – 2.04523 in.)

Main Bearing

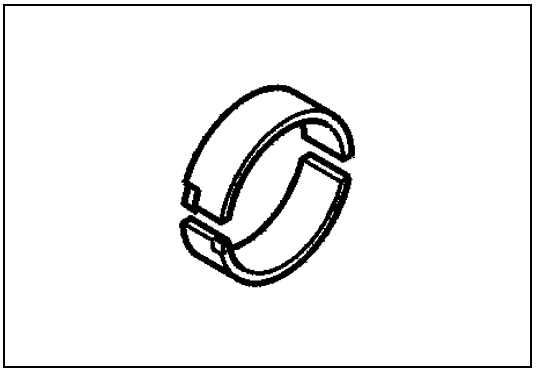

- Inspect bearing shells for signs of fusion, pitting, burn or flaking and observe contact pattern. Bearing shells found in defective condition must be replaced.

Main bearing thickness "a":
1.943 – 1.959 mm (0.07650 – 0.07712 in.)

Main bearing clearance

NOTE:

Do not rotate crankshaft while gauging plastic is installed.

1) Before checking bearing clearance, clean bearing and crankshaft journal.
2) Install bearing to cylinder block and main bearing cap referring to "Main Bearings, Crankshaft and Cylinder Block Removal and Installation" in this section.

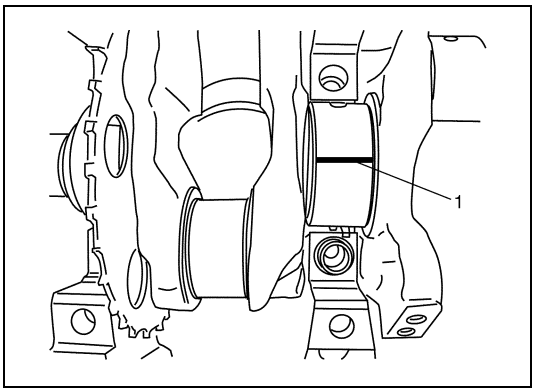

3) Place a piece of gauging plastic (1) to full width of crankshaft journal as contacted by bearing (parallel to crankshaft), avoiding oil hole.
4) Install main bearing cap referring to "Main Bearings, Crankshaft and Cylinder Block Removal and Installation" in this section.

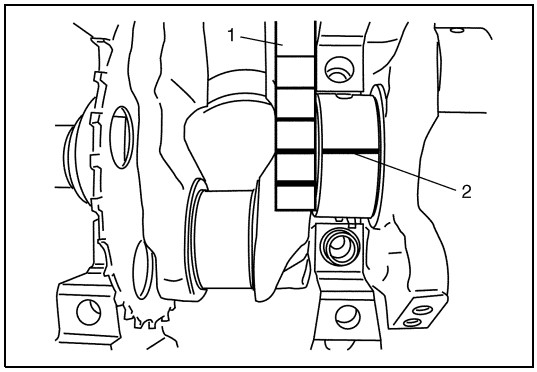

5) Remove cap and using a scale (1) on gauging plastic (2) envelope, measure gauging plastic width at the widest point (clearance).
If clearance is out of specification, use a new bearing and remeasure clearance.

Crankshaft journal clearance:
0.027 – 0.054 mm (0.00107 – 0.00213 in.)

Selection of main bearings

If engine is under the following condition, select new bearing as follows, and install it.

- Bearing is in malcondition.
- Bearing clearance is out of specification.
- Crankshaft or cylinder block is replaced.

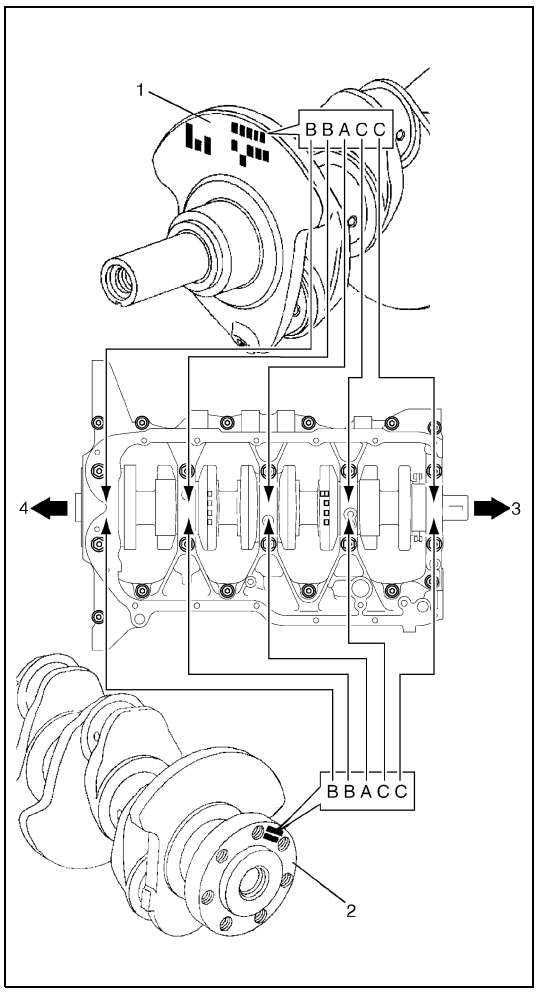

1) First, check journal diameter. As shown in figure, crank web No.8 (1) or flywheel mating surface (2) has stamped journal diameter categories. Twelve kinds of alphabets (“A”, “B”, “C”, “G”, “H”, “J”, “K”, “L”, “O”, “R”, “S” and “T”) represent the following journal diameters.

Journal diameter

Journal diameter category	Journal diameter
“A”, “G”, “K”, “R”	**47.990 – 47.997 mm (1.88937 – 1.88964 in.)**
“B”, “H”, “L”, “S”	**47.997 – 48.003 mm (1.88965 – 1.88988 in.)**
“C”, “J”, “O”, “T”	**48.003 – 48.010 mm (1.88989 – 1.89015 in.)**

3. Crankshaft pulley side
4. Flywheel side

Journal bore diameter categories represent journal diameters marked with an arrow in figure respectively. For example, stamped alphabet “A” indicates that corresponding journal diameter is 47.990 – 47.997 mm (1.88937 – 1.88964 in.).

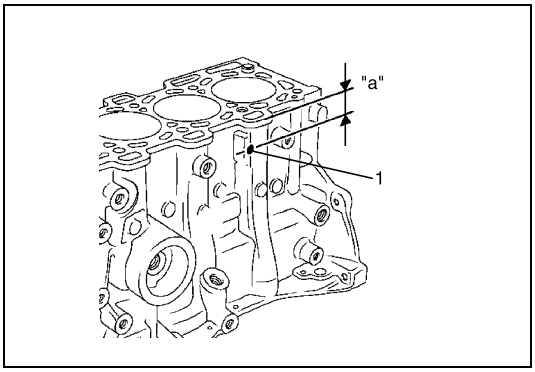

2) Next, check journal bore diameter. Distance “a” between cylinder head mating surface and drill hole (1) represents the following journal bore diameters.

Journal bore diameter

Distance “a” between cylinder head mating surface to drill hole	Journal bore diameter
33 mm (1.30 in.)	51.936 – 51.942 mm (2.04473 – 2.04496 in.)
43 mm (1.69 in.)	51.942 – 51.949 mm (2.0943 – 2.04523 in.)

For example, if distance “a” is 33 mm (1.30 in.), it means all journals bore diameter are 51.936 – 51.942 mm (2.04473 – 2.04496 in.).

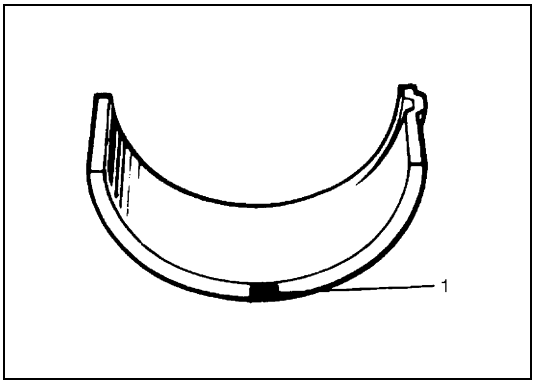

3) There are 4 kinds of bearings differing in thickness. To distinguish them, they are painted (1) in the following colors at the position as indicated in figure. Each color indicates the following thickness at the center of bearing.

Main bearing thickness

Color painted (1)	Bearing thickness
Black	1.943 – 1.949 mm (0.07650 – 0.07673 in.)
Blue	1.946 – 1.952 mm (0.07662 – 0.07685 in.)
Yellow	1.949 – 1.955 mm (0.07674 – 0.07696 in.)
RED	1.953 – 1.959 mm (0.07689 – 0.07712 in.)

4) From alphabets stamped on crank web No.8 or flywheel mating surface and cylinder head mating surface to drill hole distance, determine new bearing to be installed to journal by referring to table shown.
For example, if alphabet stamped on crank web No.8 or flywheel mating surface is “A” and cylinder head mating surface to drill hole distance is 33 mm (1.30 in.) on cylinder block, install new bearings painted in “Yellow”.

Main bearing cross-reference table (new standard bearing)

		Journal diameter category		
		“A”, “G”, “K”, “R”	“B”, “H”, “L”, “S”	“C”, “J”, “O”, “T”
Distance “a” between cylinder head mating surface and drill hole	33 mm (1.30 in.)	Yellow	Blue	Black
	43 mm (1.69 in.)	Red	Yellow	Blue

Visual inspection

Check bearings for pitting, scratches, wear or damage.
If any malcondition is found, replace both upper and lower halves.
Never replace one half without replacing the other half.

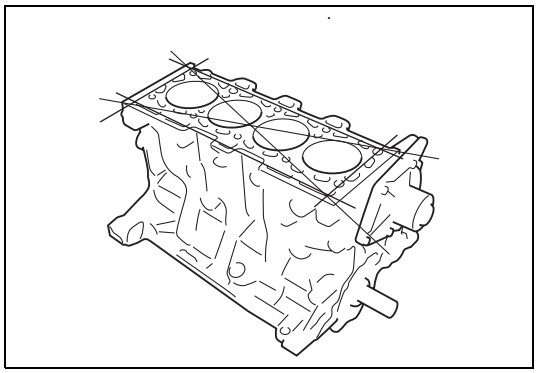

Cylinder Block

Distortion of gasketed surface

- Using straightedge and thickness gauge, check gasketed surface for distortion.
  If flatness exceeds its limit, replace cylinder block.

Cylinder block flatness
Limit: 0.03 mm (0.0012 in.)

Required Service Material

Recommended SUZUKI product or specification	Use
Loctite 518®	• To apply mating surface of cylinder head and cylinder head cover.
Loctite frentanch®	• To apply mating surfaces of lubrication pipe union bolt No.2 and cylinder block.
RHODORSEAL 5661®	• To apply mating surfaces of cylinder block, gasket holder plate and upper oil pan. • To apply mating surface of cylinder block and main bearing cap. • To apply mating surfaces of TDC pin and pin hole.
Loctite 5181®	• To apply mating surfaces of cylinder head and camshaft housing.
Loctite 648®	• To apply mating surface of lubrication pipe and cylinder block.

Tightening Torque Specifications

Fastening part	Tightening torque		
	N•m	kg-m	lb-ft
Oil pressure switch	35	3.5	25.5
Air cleaner outlet hose clamp	2.5	0.25	2.0
Boost pressure sensor bolt	8	0.8	6.0
Intake pipe No.1 nut	11	1.1	8.0
Intercooler outlet pipe bolt	28	2.8	20.5
Intercooler hose clamp No.1	4	0.4	3.0
Intercooler hose clamp No.2	5	0.5	4.0
Intercooler bracket bolt	25	2.5	18.0
Cylinder hear cover bolt	“Tighten 12 N·m (1.2 kg-m, 9.0 fb-ft) by the specified procedure”		
Heat exchanger bolt	45	4.5	32.5
Oil filter unit bracket bolt	45	4.5	32.5
Generator upper bracket bolt	40	4.0	29.0
EGR cooler water pipe assembly bolt	12	1.2	9.0
EGR valve bolt	12	1.2	9.0
EGR valve body bolt	21	2.1	15.5
EGR pipe bolt	42	4.2	30.5
Exhaust gas cooler bolt	12	1.2	9.0
Intake pipe No.2 bolt	10	1.0	7.5
EGR cooler bolt	12	1.2	9.0
EGR cooler pipe bolt	21	2.1	15.5
EGR pipe clamp	5	0.5	4.0
Lubrication pipe	23	2.3	17
Lubrication pipe clamp bolt	12	1.2	9.0
Lubrication pipe union bolt	23	2.3	17
Turbocharger nut	25	2.5	18.0

Fastening part	Tightening torque		
	N•m	kg-m	lb-ft
Turbocharger oil return bolt	12	1.2	9.0
Exhaust manifold nut	"Tighten 26 N·m (2.6 kg-m, 19.0 lb-ft) by the specified procedure"		
Level gauge tube nut	21	2.1	15.5
Oil pan baffle plate bolt	8	0.8	6.0
Upper oil pan bolt	"Tighten 6 N·m (0.6 kg-m, 4.5 lb-ft) and 16 N·m (1.6 kg-m, 12.0 lb-ft) by the specified procedure"		
Oil pump strainer bolt	12	1.2	9.0
Lower oil pan bolt	"Tighten12 N·m (1.2 kg-m, 9.0 lb-ft) by the specified procedure"		
Engine oil drain plug	35	3.5	25.5
Engine mounting bracket bolt	40	4.0	29.0
Accessory bracket bolt	28	2.8	20.5
Engine mounting nut	55	5.5	40.0
Transmission to engine bolt	55	5.5	40.0
Generator upper bracket support bolt	21	2.1	15.5
CMP sensor bolt	8	0.8	6.0
Timing belt tensioner bolt	27	2.7	19.5
Camshaft pulley bolt	14	1.4	10.5
Crankshaft pulley bolt	"Tighten 120 N·m (12.0 kg-m, 87.0 lb-ft) and 95° by the specified procedure"		
TDC pin cap	20	2.0	14.5
Gasket holder plate bolt	"Tighten 11 N·m (1.1 kg-m, 8.0 lb-ft) and by the specified procedure"		
Oil pump bolt	25	2.5	18.0
Vacuum pump oil hose union bolt	16	1.6	11.5
Camshaft cover bolt	"Tighten 5 N·m (0.5 kg-m, 4.0 lb-ft) and 12 N·m (1.2 kg-m, 9.0 lb-ft) by the specified procedure"		
Camshaft housing bolt	"Tighten 10 N·m (1.0 kg-m, 7.5 lb-ft) by the specified procedure"		
Camshaft pulley nut	"Tighten 30 N·m (3.0 kg-m, 22.0 lb-ft) and 85° by the specified procedure"		
Cylinder head bolt	"Tighten 25 N·m (2.5 kg-m, 18.0 lb-ft) and 255° by the specified procedure"		
Connecting rod bearing cap bolt	"Tighten 20 N·m (2.0 kg-m, 14.5 lb-ft) and 45° by the specified procedure"		
Main bearing cap bolt	"Tighten 25 N·m (2.5 kg-m, 18.0 lb-ft) and 47° by the specified procedure"		
Engine right mounting nut	55	5.5	40.0
Engine left mounting nut	40	4.0	29.0
Engine side mounting bracket bolt	40	4.0	29.0

Special Tool

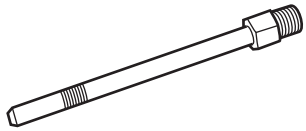 09917-78120 Dummy heater plug	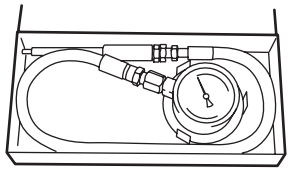 09915-77311 Oil pressure gauge	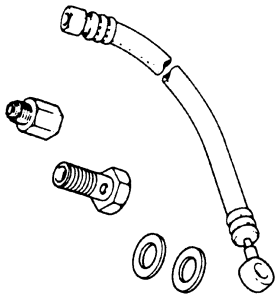 09915-77420 Oil pressure gauge hose	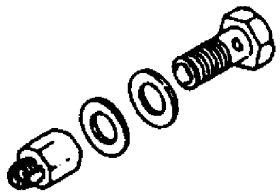 09915-77430 Oil pressure gauge attachment
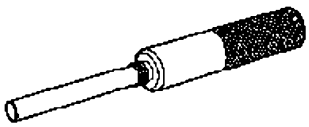 09919-58110 (Mot. 1489) TDC setting pin	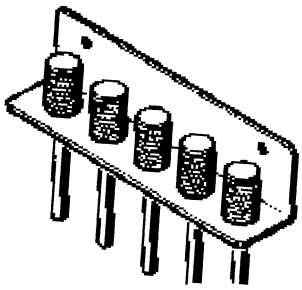 09919-58120 (Mot. 1430) Set of top dead center pins	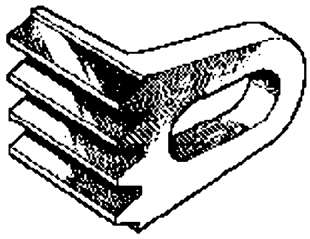 09916-98110 (Mot. 582-01) Flywheel locking tool	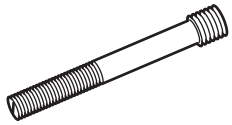 09911-98130 (Mot. 1714) Stud M14
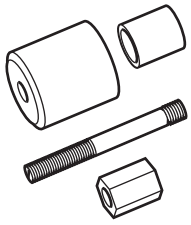 09911-98140 (Mot. 1586) Crankshaft oil seal fitting	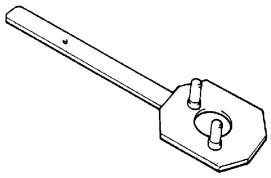 09917-68221 Camshaft lock holder	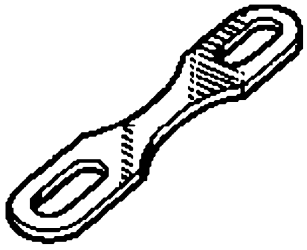 09917-68110 (Mot. 588) Cylinder liner flange	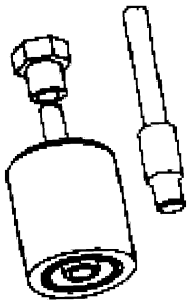 09911-98120 (Mot. 1632) Camshaft oil seal fitting
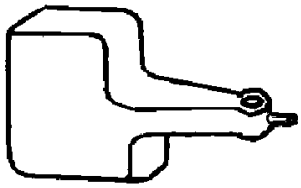 09910-26510/OUT 0000005 Dial gauge support	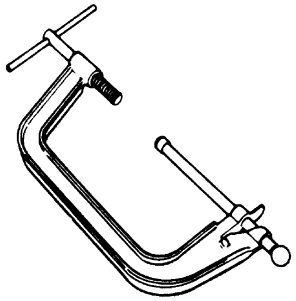 09916-14510 Valve lifter	 09916-14521 Valve lifter attachment	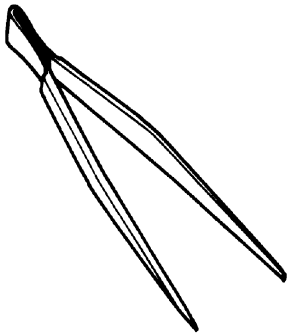 09916-84511 Forceps

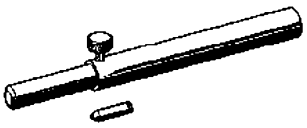 09916-58130 (Mot. 1511-01) Valve stem seal fitting	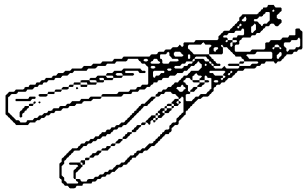 09916-48110 (Mot. 1335) Valve stem seal pliers	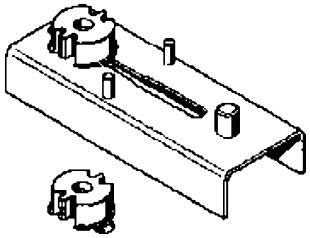 09913-98110 (Mot. 1492) Connecting rod bearing fitting	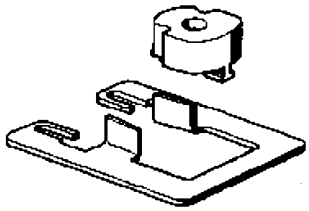 09913-88110 (Mot. 1492-3) Connecting rod bearing adapter
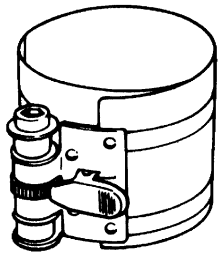 09916-77310 Piston ring compressor	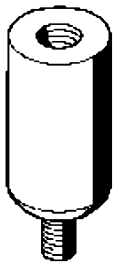 09916-48120 (Mot. 1485-01) Oil jet remover	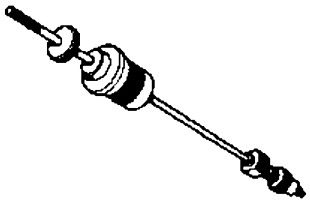 09916-58120 (Emb. 880) Inertia extractor	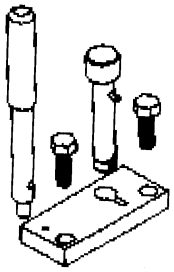 09916-58110 (Mot. 1494) Oil jet installer
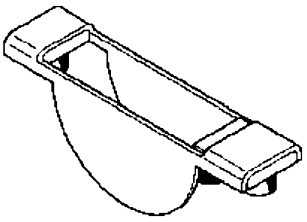 09913-78110 (Mot. 1493-01) Main bearing fitting	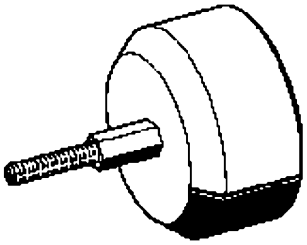 09911-98110 (Mot. 1585) Crankshaft oil seal fitting	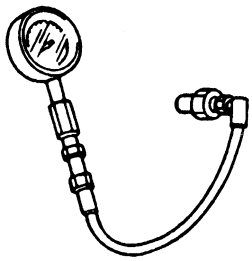 09912-57821 Compression gauge	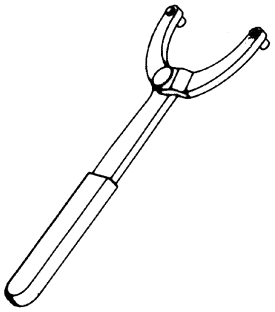 09916-48130 (Mot. 1729) EGR valve remover

SECTION 6B2

ENGINE COOLING (K9K ENGINE)

WARNING:

For vehicles equipped with a Supplemental Restraint (Air Bag) System:

- **Service on and around the air bag system components or wiring must be performed only by an authorized SUZUKI dealer. Refer to "Air Bag System Components and Wiring Location View" under "General Description" in air bag system section in order to confirm whether you are performing service on or near the air bag system components or wiring. Please observe all WARNINGS and "Service Precautions" under "On-Vehicle Service" in air bag system section before performing service on or around the air bag system components or wiring. Failure to follow WARNINGS could result in unintentional activation of the system or could render the system inoperative. Either of these two conditions may result in severe injury.**
- **Technical service work must be started at least 90 seconds after the ignition switch is turned to the "LOCK" position and the negative cable is disconnected from the battery. Otherwise, the system may be activated by reserve energy in the Sensing and Diagnostic Module (SDM).**

NOTE:

For the items with asterisk (*) in the "CONTENTS" below, refer to the same section of the Service Manual mentioned in "FOREWORD" of this manual.

CONTENTS

General Description 6B2-2
- Cooling System Circulation 6B2-2
- Degassing Tank 6B2-*
- Water Pump 6B2-*
- Thermostat 6B2-*
- ECT sensor 6B2-*
- Radiator Cooling Fan 6B2-*

Diagnosis 6B2-*

Maintenance 6B2-3
- Coolant 6B2-3
- Coolant Level Check 6B2-*
- Engine Cooling System Inspection and Service 6B2-*
- Coolant Replacement 6B2-*

On-Vehicle Service 6B2-4
- Cooling System Component 6B2-4
- Cooling Water Pipes or Hoses Removal and Installation 6B2-*
- Thermostat Assembly Removal and Installation 6B2-*
- Engine Coolant Temperature Sensor (ECT Sensor) Removal and Installation 6B2-*
- Engine Coolant Temperature Sensor (ECT Sensor) Inspection 6B2-*
- Radiator Cooling Fan Removal and Installation 6B2-5
- Radiator Cooling Fan motor On-Vehicle Inspection 6B2-*
- Radiator Cooling Fan Disassembly and Reassembly 6B2-*
- Radiator Cooling Fan Relay Inspection 6B2-*
- Radiator Removal and Installation 6B2-*
- Radiator Inspection 6B2-*
- Water Pump Removal and Installation 6B2-*
- Water Pump Inspection 6B2-*

Required Service Material 6B2-*

Tightening Torque Specification 6B2-6

General Description

The cooling system consists of the degassing tank cap, radiator, degassing tank, hoses, water pump, radiator cooling fan and thermostat assembly. The radiator is of tube-and-fin type.

Cooling System Circulation

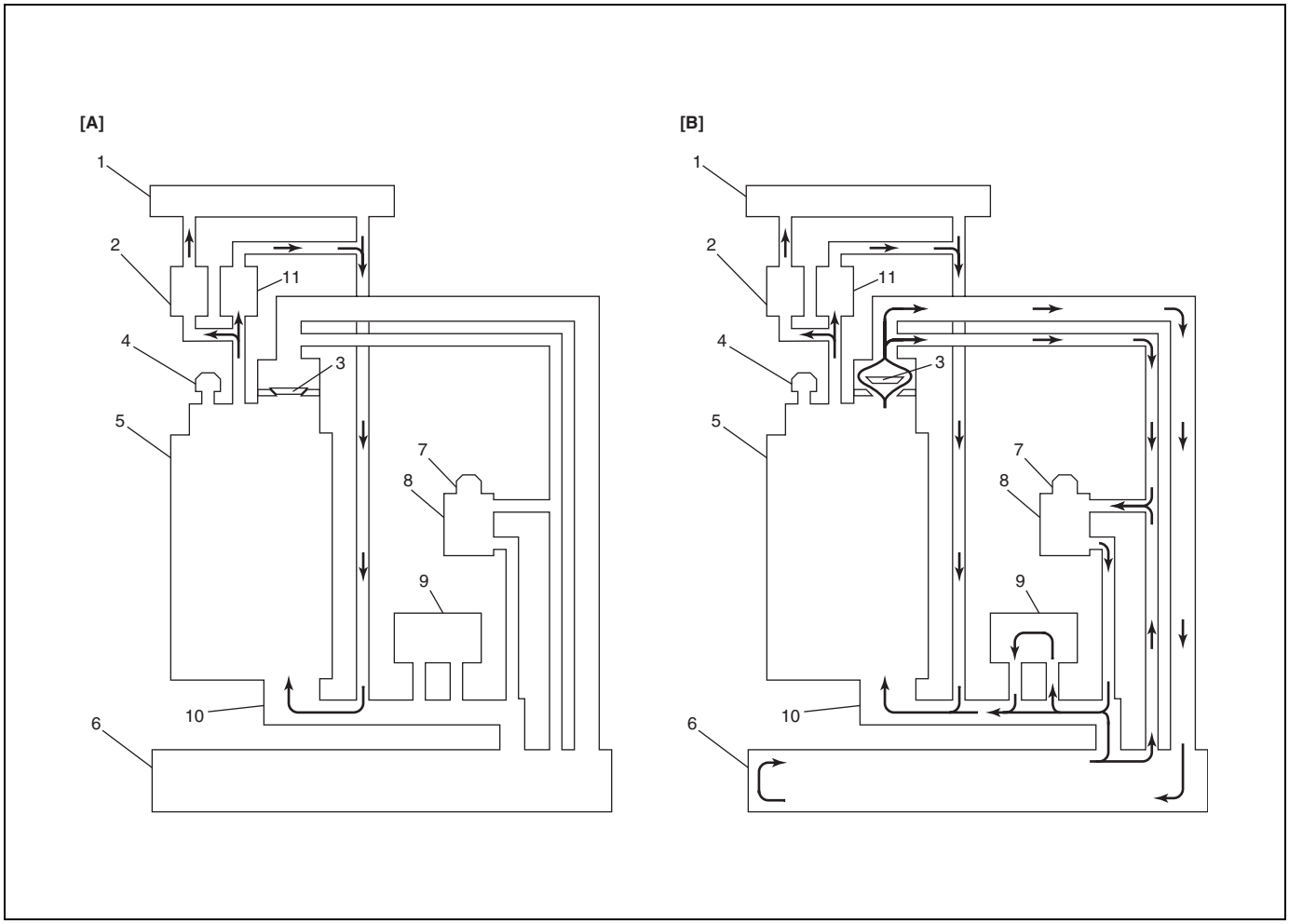

[A]: When thermostat is close	3. Thermostat	7. Degassing tank cap	11. EGR cooler
[B]: When thermostat is open	4. Air bleed plug	8. Degassing tank	
1. Heater	5. Cylinder block and cylinder head	9. Heat exchanger	
2. Thermo plunger	6. Radiator	10. Water pump	

Maintenance

WARNING:

- **Keep hands, tools and clothing away from radiator cooling fan to help prevent personal injury. This fan is electric and can turn on whether engine is running or not. The fan can start automatically in response to ECM with ignition switch turned on.**
- **To help avoid danger of being burned, do nut remove degassing tank cap while engine and radiator are still hot.**
  Scalding fluid and steam can be blown out under pressure if cap is taken off too soon.

Coolant

When the system cools down, the coolant is drawn back into the radiator.
The cooling system has been filled at the factory with a quality coolant that is a 50/50 mixture of water and ethylene glycol antifreeze.
This 50/50 mixture coolant solution provides freezing protection to –36 °C (–33 °F).

- Maintain cooling system freeze protection at –36 °C (–33 °F) to ensure protection against corrosion and loss of coolant from boiling.
  This should be done even if freezing temperatures are not expected.
- Add ethylene glycol base coolant when coolant has to be added because of coolant loss or to provide added protection against freezing at temperature lower than –36 °C (–33 °F).

Anti-freeze proportioning chart

Freezing temperature	**°C**	**–36**
	°F	**–33**
Antifreeze/Anticorrosion coolant concentration	**%**	**50**
Ratio of compound to cooling water	**ltr.**	**3.65/3.65**
	US pt.	**6.42/6.42**
	Imp pt.	**7.71/7.71**

Coolant capacity
: 7.3 liters (12.85/15.42 US/Imp pt.)

NOTE:

- **Alcohol or methanol base coolant or plain water alone should not be used in cooling system at any time as damage to cooling system could occur.**
- **Coolant must be mixed with demineraled water or distilled water.**

On-Vehicle Service

CAUTION:

- **Check to make sure that engine coolant temperature is cold before removing any part of cooling system.**
- **Also be sure to disconnect negative (–) cable from battery terminal before removing any part.**

Cooling System Component

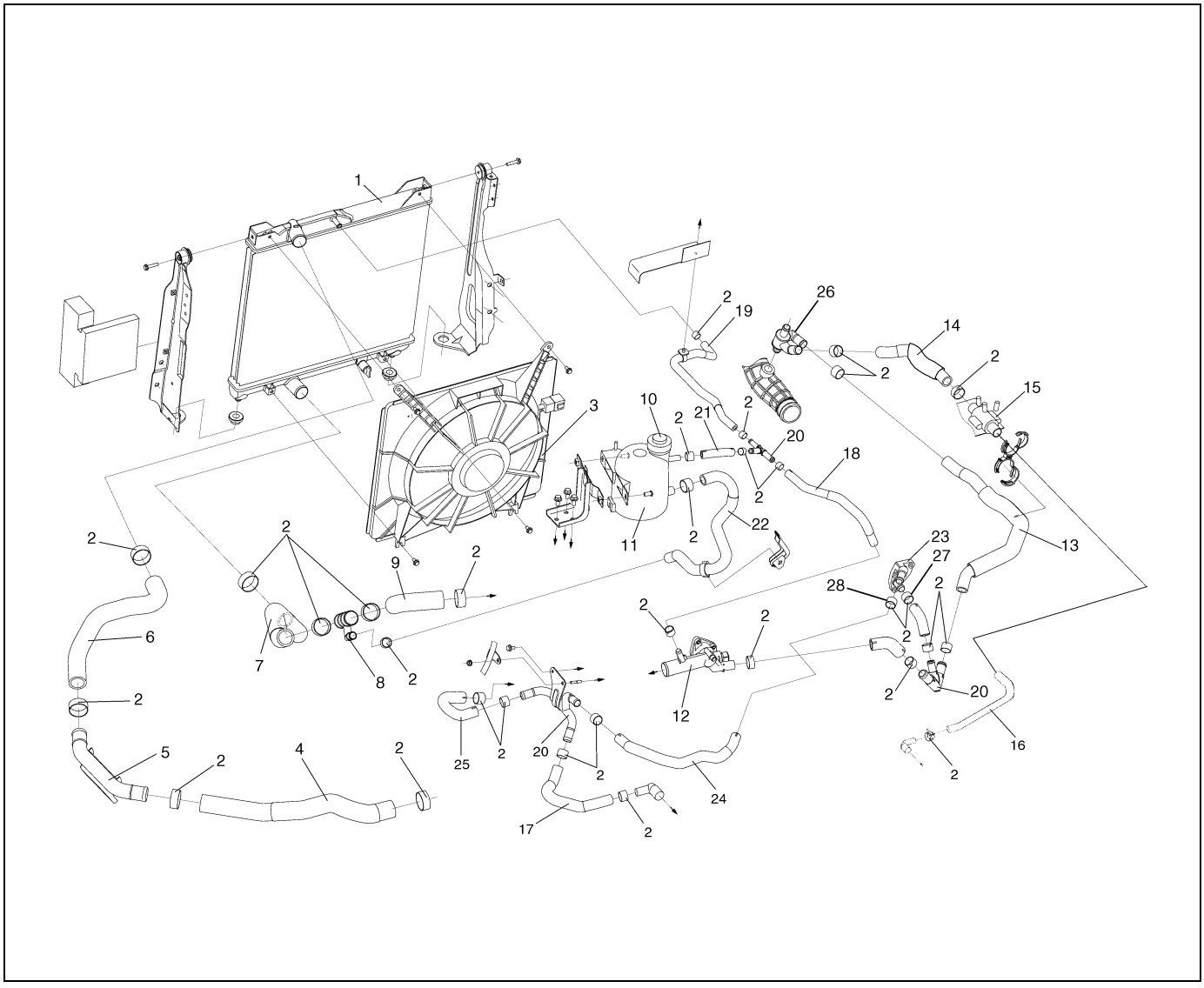

1. Radiator	10. Degassing tank cap	19. Ventilation hose (radiator to 3-way joint)
2. Hose clip	11. Degassing tank	20. 3-way joint
3. Radiator cooling fan assembly	12. Thermostat assembly	21. Ventilation hose (3-way joint to degassing tank)
4. Radiator inlet hose No.1	13. Heater inlet hose No.1	22. Degassing tank outlet hose
5. Radiator inlet pipe	14. Heater inlet hose No.2	23. EGR cooler water pipe
6. Radiator inlet hose No.2	15. Thermo plunger	24. EGR cooler outlet hose
7. Radiator outlet hose No.1	16. Heater inlet hose No.3	25. Heater outlet hose No.2
8. Radiator outlet pipe No.1	17. Heater outlet hose No.1	26. Heater inlet pipe
9. Radiator outlet hose No.2	18. Ventilation hose (engine to 3-way joint)	27. EGR cooler inlet

Radiator Cooling Fan Removal and Installation

NOTE:

Do not disassemble radiator cooling fan.
If any repair is required on fan, replace it as assembly.

Removal

1) Disconnect negative (–) cable at battery.

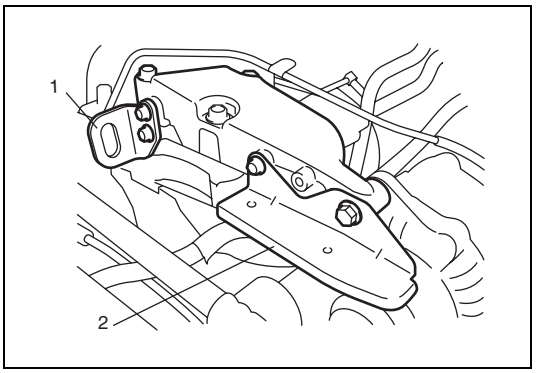

2) Remove engine hanger (1) and accessory belt cover (2).
3) Recovery refrigerant from A/C system referring to “Recovery” in Section 1B.
4) Remove A/C suction pipe and condenser outlet pipe referring to “Major Components and Location” in Section 1B.
5) Detach P/S reservoir from its bracket.
6) Drain coolant from cooling system referring to “Coolant Replacement” in this section.
7) Disconnect radiator inlet hose No.2 and ventilation hose from radiator.

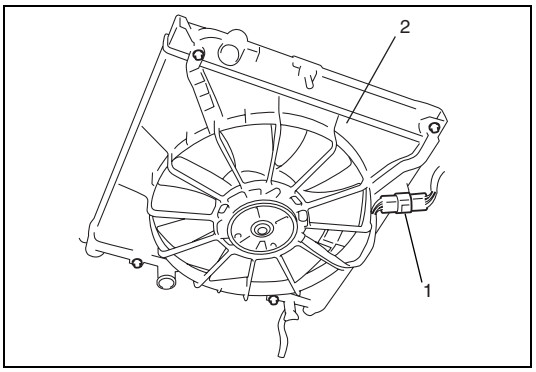

8) Disconnect cooling fan motor connector (1).
9) Remove radiator cooling fan (2).

Installation

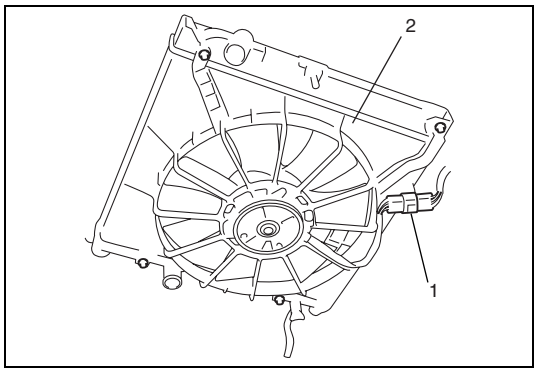

1) Install radiator cooling fan(2).
2) Connect cooling fan motor connector (1).
3) Connect radiator inlet hose No.2 and ventilation hose to radiator.
4) Install P/S reservoir to its bracket.
5) Install A/C suction pipe and condenser outlet pipe referring to “Major Components and Location” in Section 1B.

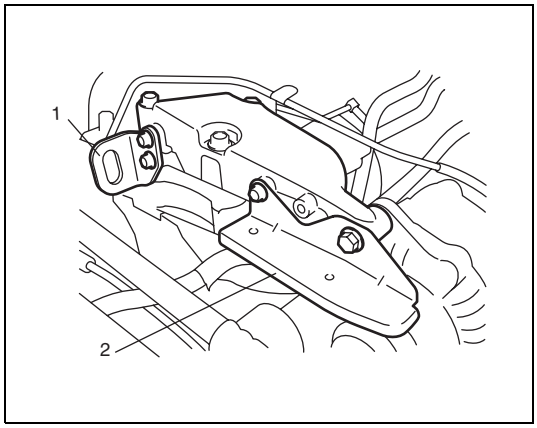

6) Install engine hanger (1) and accessory belt cover (2).

Tightening torque
Engine hanger bolt (a): 23 N·m (2.3 kg-m, 17.0 lb-ft)

7) Connect negative (–) cable at battery.
8) Refill cooling system with coolant referring to “Coolant Replacement” in this section.
9) Recharge A/C system with refrigerant referring to “Operation Procedure for Refrigerant Charging” in Section 1B.
10) Check to make sure that there is no coolant leakage and A/C refrigerant leakage at each connection.

Tightening Torque Specification

Fastening part	Tightening torque		
	N•m	kg-m	lb-ft
Thermostat assembly bolt	10	1.0	7.5
Engine hanger bolt	23	2.3	17.0
Radiator mounting bolt	11	1.1	8.0
Water pump bolt	11	1.1	8.0
Fan nut	6	0.6	4.5
Cooling fan motor bolt	4	0.4	3.0

SECTION 6C2

ENGINE FUEL (K9K ENGINE)

WARNING:

For vehicles equipped with a Supplemental Restraint (Air Bag) System:

- **Service on and around the air bag system components or wiring must be performed only by an authorized SUZUKI dealer. Refer to "Air Bag System Components and Wiring Location View" under "General Description" in air bag system section in order to confirm whether you are performing service on or near the air bag system components or wiring. Please observe all WARNINGS and "Service Precautions" under "On-Vehicle Service" in air bag system section before performing service on or around the air bag system components or wiring. Failure to follow WARNINGS could result in unintentional activation of the system or could render the system inoperative. Either of these two conditions may result in severe injury.**
- **Technical service work must be started at least 90 seconds after the ignition switch is turned to the "LOCK" position and the negative cable is disconnected from the battery. Otherwise, the system may be activated by reserve energy in the Sensing and Diagnostic Module (SDM).**

NOTE:

For the items with asterisk (*) in the "CONTENTS" below, refer to the same section of the Service Manual mentioned in "FOREWORD" of this manual.

CONTENTS

General Description 6C2-*
On-Vehicle Service..... 6C2-2
Fuel System Components 6C2-2
Precautions 6C2-*
Water Draining of Fuel Filter 6C2-3
Air Bleeding of Fuel System 6C2-3
Fuel Line Inspection 6C2-*
Fuel Filler Cap Inspection 6C2-*
Fuel Tank Components 6C2-*
Fuel Tank Removal and Installation 6C2-*
Fuel Tank Inspection 6C2-*
Fuel Tank Purging Procedure 6C2-*
Fuel Level Gauge Assembly Removal and Installation 6C2-*
Fuel Pipe Removal and Installation 6C2-*
Fuel Level Gauge Inspection 6C2-*
Fuel Filter Removal and Installation..... 6C2-3
Special Tool..... 6C2-*
Tightening Torque Specification 6C2-*

On-Vehicle Service

CAUTION:

- **Do not expose removed fuel parts to dust. Keep them always clean.**
- **Be sure to read "Precautions in Fuel Delivery System" in Section 6E2 before disconnecting fuel line or removing fuel system part(s).**
  Failure to follow its instruction could result unneeded fuel system repairs.

Fuel System Components

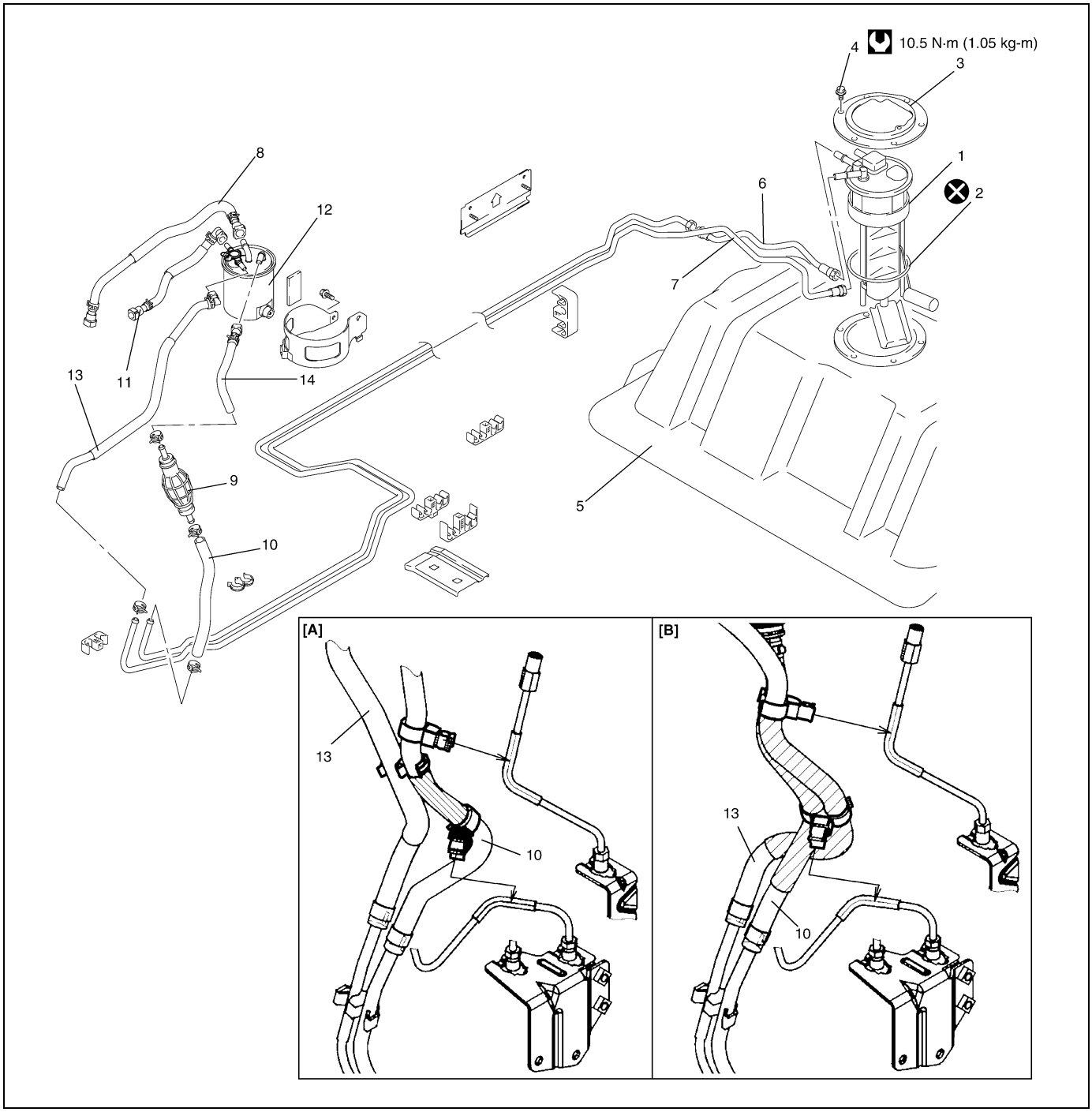

[A]: Type A	4. Fuel level gauge assembly bolt	9. Priming pump	14. Fuel feed hose No.2
[B]: TypeB	5. Fuel tank	10. Fuel feed hose No.1	Tightening torque

1. Fuel level gauge	6. Fuel feed line	11. Fuel return hose No.1	⊗ Do not reuse.
2. Fuel level gauge plate gasket	7. Fuel return line	12. Fuel filter	
3. Fuel level gauge plate	8. Fuel feed hose No.2	13. Fuel return hose No.2	

Water Draining of Fuel Filter

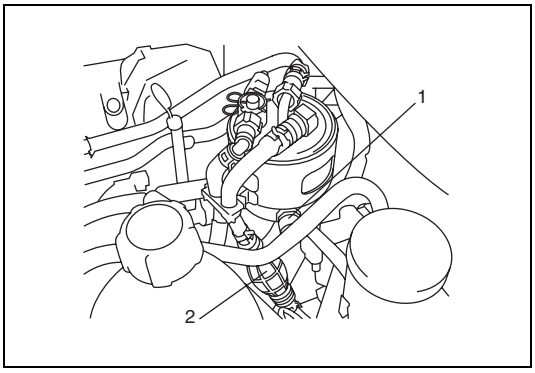

1) Disconnect negative (–) cable at battery.
2) Place container under bleed screw (1), and loosen bleed screw.
3) Pump priming pump several times until fuel flow out from bleed screw in order to drain water from fuel filter.
4) Tighten bleed screw.
5) Connect negative (–) cable at battery.

Air Bleeding of Fuel System

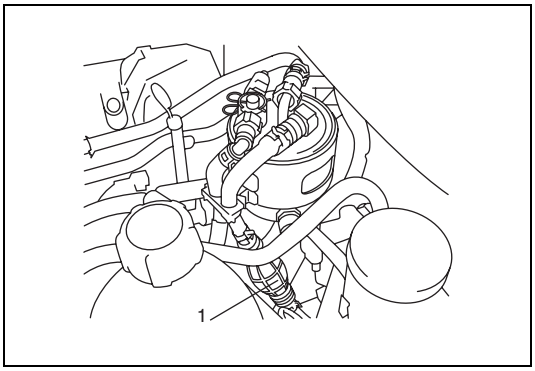

Air bleeding must be carried out when fuel system has been disassembled or when vehicle ran out of fuel.
Pump priming pump (1) 20 times or more, and then check engine starts.

Fuel Filter Removal and Installation

NOTE:

Fuel filter can not disassemble.
Replace fuel filter as an assembly, if necessary.

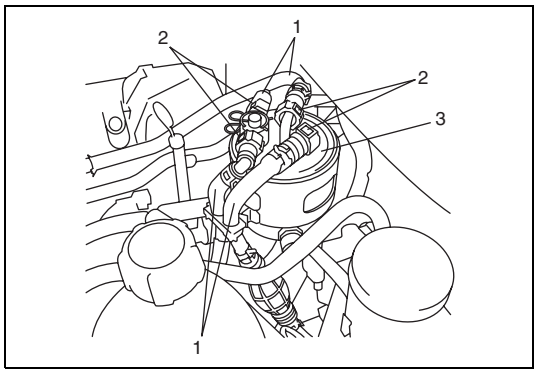

Removal

1) Disconnect negative (–) cable at battery.
2) Pull out fuel hoses (1) with pushing lock button (2).
3) Install plugs (special tool) to openings of fuel filter (3) and fuel hose (1) in order to prevent its internal parts from dust. For detail, refer to “Precaution in Fuel Delivery System” in Section 6E2.
4) Remove fuel filter (3) from its bracket.

Installation

Reverse removal procedure for installation noting the following.

- Bleed air in system referring to “Air Bleeding Procedure” in this section.
- Start engine and check that there are no fuel leakage.

SECTION 6E2

ENGINE AND EMISSION CONTROL SYSTEM (K9K ENGINE)

WARNING:

For vehicles equipped with a Supplemental Restraint (Air Bag) System:

- **Service on and around the air bag system components or wiring must be performed only by an authorized SUZUKI dealer. Refer to "System Components and Wiring Location View and Connectors" under "General Description" in Section 10B in order to confirm whether you are performing service on or near the air bag system components or wiring. Please observe all WARNINGS and "Service Precautions" under "On-Vehicle Service" in Section 10B before performing service on or around the air bag system components or wiring. Failure to follow WARNINGS could result in unintentional activation of the system or could render the system inoperative. Either of these two conditions may result in severe injury.**
- **Technical service work must be started at least 90 seconds after the ignition switch is turned to the "LOCK" position and the negative cable is disconnected from the battery. Otherwise, the system may be activated by reserve energy in the Sensing and Diagnostic Module (SDM).**

NOTE:

For the items with asterisk (*) in the "CONTENTS" below, refer to the same section of the Service Manual mentioned in "FOREWORD" of this manual.

CONTENTS

General Description 6E2-3
- System Diagram 6E2-3
- Electronic Control System 6E2-5
  - System wiring diagram 6E2-5
  - System location diagram 6E2-8
- Air Intake System 6E2-9
- Fuel Delivery System 6E2-10

On-Vehicle Service 6E2-11
- Idle Speed Inspection 6E2-11
- Fuel Delivery System 6E2-12
  - Precautions in fuel delivery system 6E2-12
  - Fuel delivery system components 6E2-15
  - Fuel pressure relief confirmation procedure 6E2-*
  - Fuel leakage check 6E2-*
  - High pressure pipes removal and installation 6E2-16
  - Fuel injector on-vehicle inspection 6E2-*
  - Fuel injector removal and installation 6E2-21
  - Common rail (High pressure fuel injection rail) removal and installation 6E2-*
  - Injection pump removal and installation 6E2-23
  - Venturi removal and installation 6E2-25
- Electronic Control System 6E2-26
  - Engine control module (ECM) removal and installation 6E2-26
  - ECM registration (Programming) 6E2-28
  - Glow plug removal and installation 6E2-*
  - Glow plug inspection 6E2-*
  - APP sensor removal and installation 6E2-30
  - APP sensor inspection 6E2-31
  - Fuel temperature sensor removal and installation 6E2-32
  - Fuel temperature sensor inspection 6E2-*
  - Fuel flow actuator removal and installation 6E2-33
  - Fuel flow actuator inspection 6E2-*
  - Engine coolant temperature sensor (ECT sensor) removal and installation 6E2-34
  - Engine coolant temperature sensor (ECT sensor) inspection 6E2-*
  - Camshaft position sensor (CMP sensor) removal and installation 6E2-*

Crankshaft position (CKP) sensor (engine speed sensor) removal and installation 6E2-35
Crankshaft position (CKP) sensor (engine speed sensor) inspection 6E2-36
MAF and IAT sensor removal and installation 6E2-37
MAF and IAT sensor inspection 6E2-37
Boost pressure sensor removal and installation 6E2-38
Boost pressure sensor inspection 6E2-38
Boost pressure control solenoid valve removal and installation 6E2-39
Boost pressure control solenoid valve inspection 6E2-39
Radiator fan control system inspection 6E2-40
Main relay and radiator fan relay inspection 6E2-*
Pre-heating unit removal and installation 6E2-*
Knock sensor removal and installation 6E2-*
EGR valve removal and installation 6E2-40
EGR valve inspection 6E2-40
Tightening Torque Specification 6E2-42
Special Tool 6E2-42

General Description

System Diagram

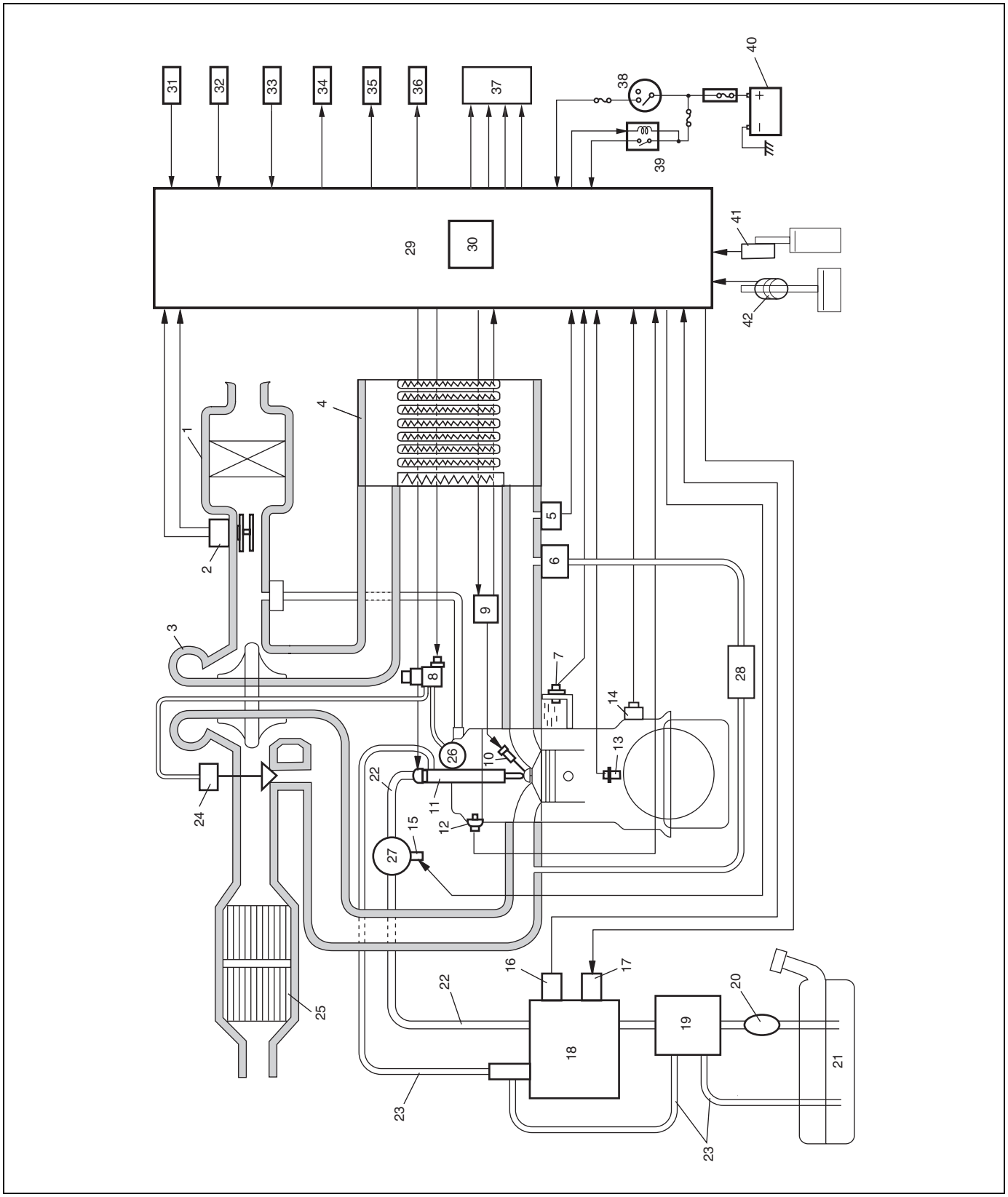

1. Air cleaner	15. Fuel pressure sensor	29. ECM
2. MAF and IAT sensor	16. Fuel temperature sensor	30. Barometric pressure sensor
3. Turbocharger	17. Fuel flow actuator	31. A/C pressure sensor (if equipped with A/C)
4. Intercooler	18. Injection pump	32. A/C relay (if equipped with A/C)
5. Boost pressure sensor	19. Fuel filter	33. VSS
6. EGR valve	20. Priming pump	34. Radiator fan relays
7. ECT sensor	21. Fuel tank	35. A/C compressor relay (if equipped with A/C)
8. Boost pressure control solenoid valve	22. Fuel feed line	36. Additional heater relays
9. Pre-heating unit	23. Fuel return line	37. Combination meter
10. Glow plug	24. Waste gate actuator	38. Ignition switch
11. Fuel injector	25. Catalytic converter	39. Main relay
12. CMP sensor	26. Vacuum pump	40. Battery
13. CKP sensor	27. Common rail (high pressure fuel injection rail)	41. APP sensor
14. Knock sensor	28. EGR cooler	42. Stop (brake) lamp switch

Electronic Control System

System wiring diagram

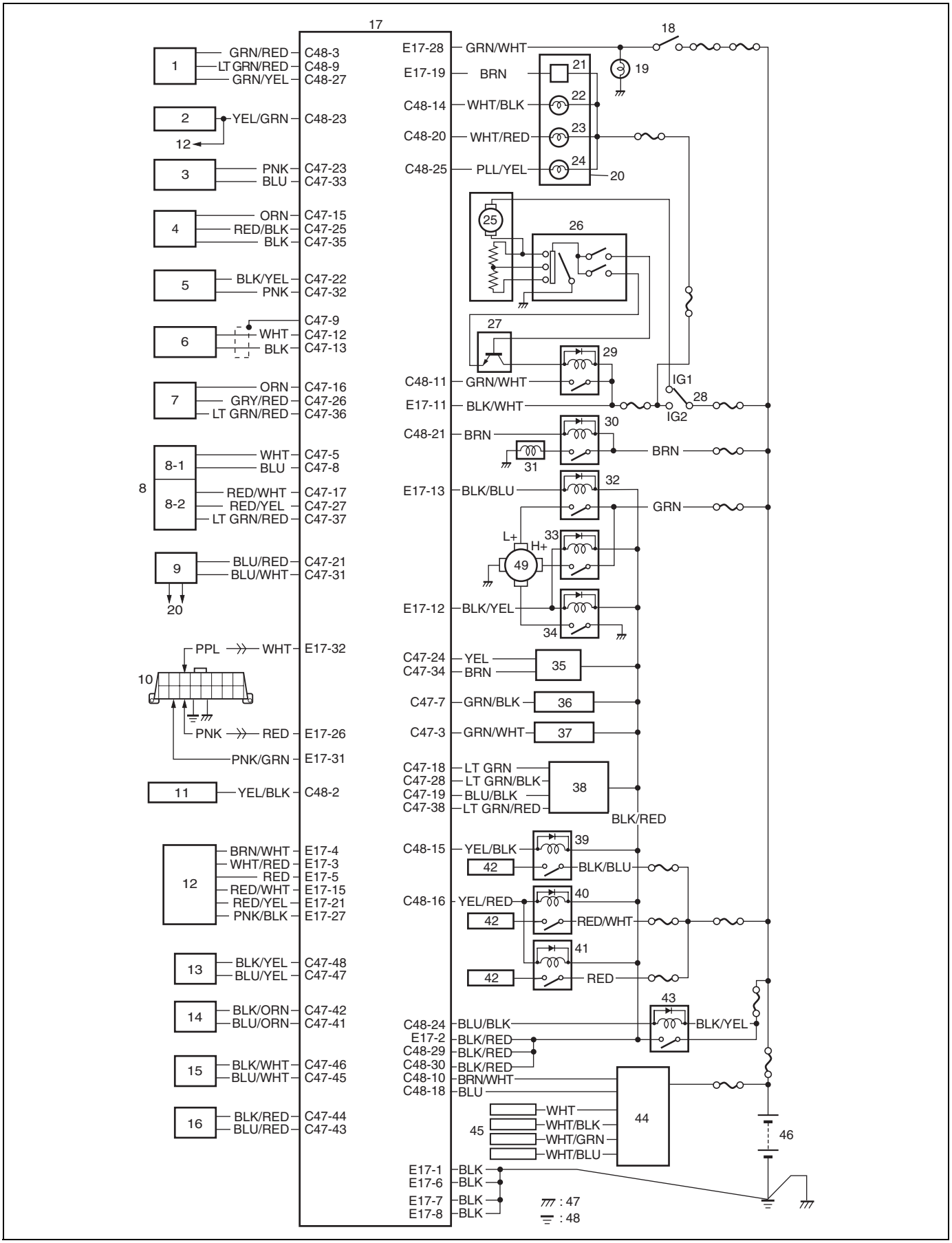

1. A/C pressure sensor (if equipped with A/C)	16. Fuel injector No.4	33. Radiator fan relay No.2
2. VSS	17. ECM	34. Radiator fan relay No.3
3. CKP sensor	18. Stop (brake) lamp switch	35. CMP sensor
4. Fuel pressure sensor	19. Stop (brake) lamp	36. Fuel flow actuator
5. Fuel temperature sensor	20. Combination meter	37. Boost pressure control solenoid valve
6. Knock sensor	21. Tachometer	38. MAF and IAT sensor
7. Boost pressure sensor	22. Injection warning light (gravity 1 fault)	39. Additional heater relay No.1
8. EGR valve	23. Red stop warning light (gravity 2 fault)	40. Additional heater relay No.2
8-1. EGR valve motor	24. Malfunction indicator lamp (MIL)	41. Additional heater relay No.3
8-2. EGR valve position sensor	25. Heater blower motor	42. Additional heater plug
9. ECT sensor	26. Heater control lever assembly	43. Main relay
10. Data link connector	27. A/C evaporator temperature sensor (if equipped with A/C)	44. Pre-heating unit
11. Immobilizer control module	28. Ignition switch	45. Glow plug
12. APP sensor	29. A/C relay (if equipped with A/C)	46. Battery
13. Fuel injector No.1	30. A/C compressor relay (if equipped with A/C)	47. Body ground
14. Fuel injector No.2	31. A/C compressor (if equipped with A/C)	48. Engine ground
15. Fuel injector No.3	32. Radiator fan relay No.1	49. Radiator cooling fan motor

ECM Connector (Terminal Arrangement Viewed from Harness Side)

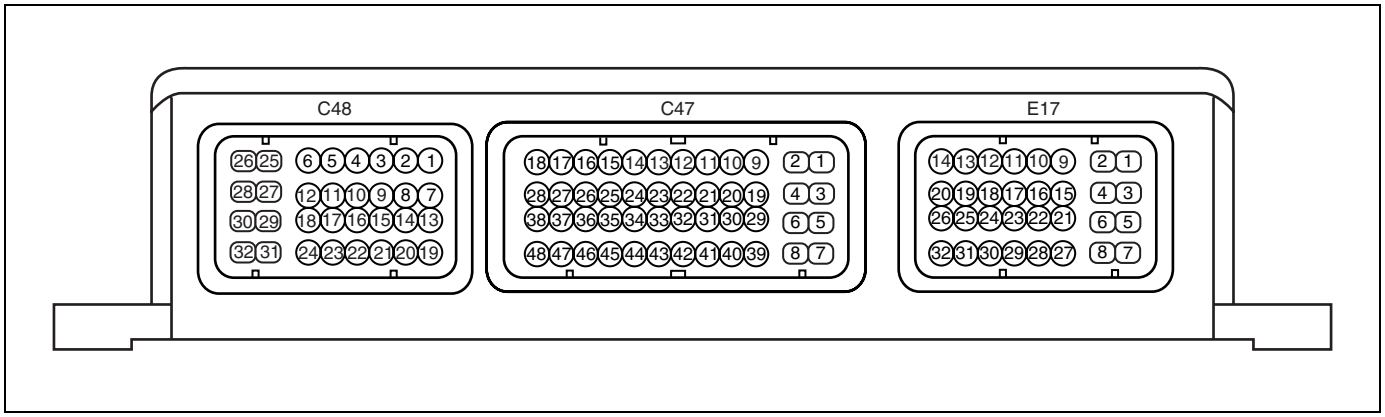

TERMINAL		CIRCUIT
E17	1	–
	2	Main power supply
	3	APP sensor 1 signal
	4	Power source for APP sensor 1
	5	Ground for APP sensor 1
	6	Ground for ECM
	7	Ground for ECM
	8	Ground for ECM
	9	–
	10	–
	11	Ignition switch signal
	12	Radiator fan relay No.2 and No.3 output
	13	Radiator fan relay No.1 output
	14	–
	15	Power source for APP sensor 2
	16	–
	17	–
	18	–
	19	Engine revolution signal for combination meter
	20	–
	21	APP sensor 2 signal
	22	–
	23	–
	24	–
	25	–
	26	CAN line (high)
	27	Ground for APP sensor 2
	28	Stop (brake) lamp switch
	29	–
	30	–
	31	Serial communication line of data link connector 12 V
	32	CAN line (low)
C47	1	–
	2	–
	3	Boost pressure control solenoid valve output
	4	–
	5	EGR valve output (+)

TERMINAL		CIRCUIT
C47	6	–
	7	Fuel flow actuator output
	8	EGR valve output (–)
	9	Ground of shield wire for knock sensor
	10	–
	11	–
	12	Knock sensor signal
	13	Ground for knock sensor
	14	–
	15	Power source for fuel pressure sensor
	16	Power source for boost pressure sensor
	17	Power source for potentiometer in EGR valve
	18	Power source for MAF sensor
	19	IAT sensor signal
	20	–
	21	ECT sensor signal
	22	Fuel temperature sensor signal
	23	CKP sensor signal
	24	CMP sensor signal
	25	Fuel pressure sensor signal
	26	Boost pressure sensor signal
	27	Signal for potentiometer in EGR valve
	28	MAF sensor signal
	29	–
	30	–
	31	Ground for ECT sensor
	32	Ground for fuel temperature sensor
	33	Ground for CKP sensor
	34	Ground for CMP sensor
	35	Ground for fuel pressure sensor
	36	Ground for boost pressure sensor
	37	Ground for potentiometer in EGR valve
	38	Ground for MAF and IAT sensor
	39	–
	40	–
	41	Fuel injector No.2 output (low side)
	42	Fuel injector No.2 output (high side)
	43	Fuel injector No.4 output (low side)
	44	Fuel injector No.4 output (high side)

TERMINAL		CIRCUIT
C47	45	Fuel injector No.3 output (low side)
	46	Fuel injector No.3 output (high side)
	47	Fuel injector No.1 output (low side)
	48	Fuel injector No.1 output (high side)
C48	1	–
	2	Immobilizer control module input
	3	Power source for A/C pressure sensor
	4	–
	5	–
	6	–
	7	–
	8	–
	9	A/C pressure sensor signal
	10	Pre-heating unit diagnosis input
	11	A/C relay signal
	12	–
	13	–
	14	Injection warning light (gravity 1 fault)
	15	Additional heater relay No.1 output
	16	Additional heater relay No.2 output
	17	–
	18	Pre-heating unit output
	19	–
	20	Red stop warning light (gravity 2 fault)
	21	A/C compressor relay output
	22	–
	23	VSS signal
	24	Main relay output
	25	Malfunction indicator lamp
	26	–
	27	Ground for A/C pressure sensor
	28	–
	29	Main power supply
	30	Main power supply
	31	–
	32	–

System location diagram

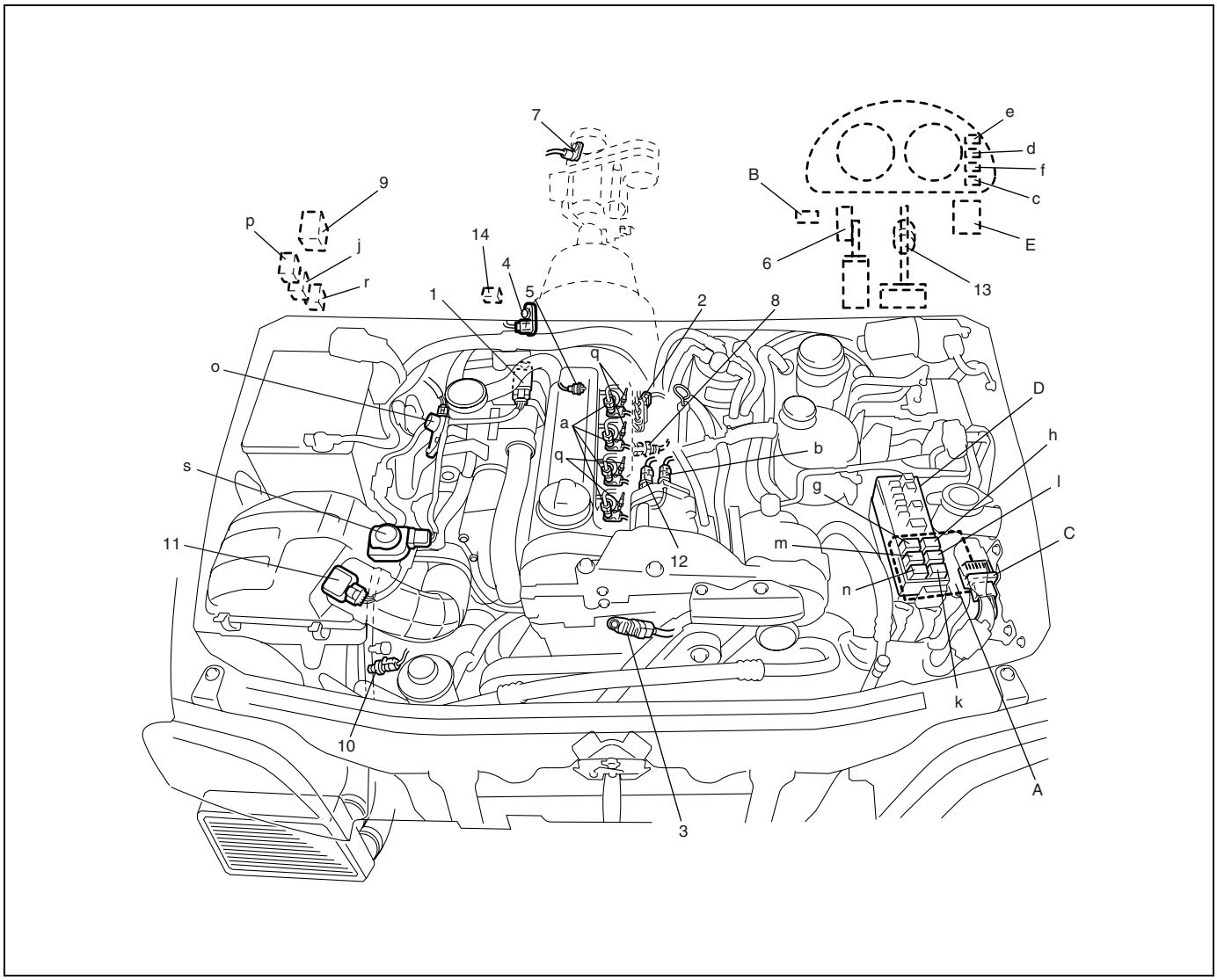

INFORMATION SENSORS	CONTROLLED DEVICES	OTHERS
1. Boost pressure sensor	a: Fuel injector	A: ECM
2. Fuel pressure sensor	b: Fuel flow actuator	B: Data link connector
3. CMP sensor	c: Malfunction indicator lamp	C: Pre-heating unit
4. CKP sensor	d: Injection warning light (gravity 1 fault)	D: Main fuse box
5. ECT sensor	e: Glow lamp	E: Circuit fuse box
6. APP sensor	f: Red stop warning light (gravity 2 fault)	
7. VSS	g: A/C relay (if equipped)	
8. Knock sensor	h: A/C compressor relay (if equipped)	
9. Immobilizer control module	i: Additional heater plug	
10. A/C pressure sensor	j: Additional heater relay No.1	
11. MAF and IAT sensor	k: Radiator fan relay No.1 (low)	
12. Fuel temperature sensor	l: Radiator fan relay No.2 (high)	
13. Stop (brake) lamp switch	m: Radiator fan relay No.3 (high)	
14. A/C evaporator temperature sensor	n: Main relay	
	o: EGR valve	
	p: Additional heater relay No.2	
	q: Glow plug	
	r: Additional heater relay No.3	
	s: Boost pressure control solenoid valve	

Air Intake System

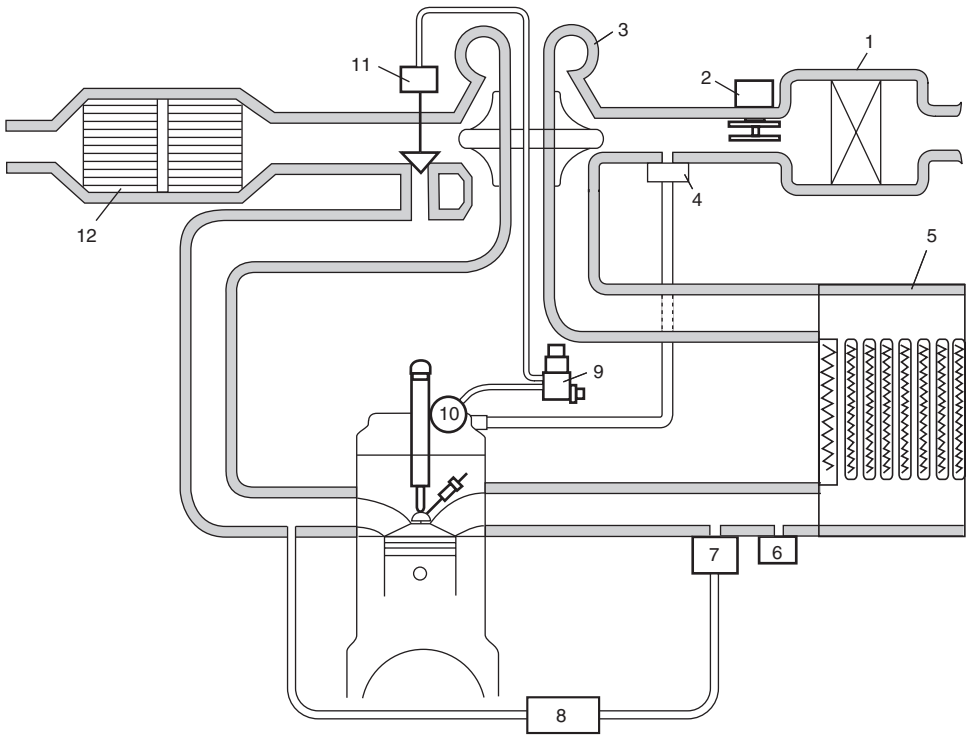

1. Air cleaner	4. Intercooler	7. Boost pressure control solenoid valve
2. MAF and IAT sensor	5. Boost pressure sensor	8. Vacuum pump
3. Turbocharger	6. EGR valve	9. Waste gate actuator
3. Oil vapor recirculation valve	6. EGR cooler	9. Catalytic converter

Fuel Delivery System

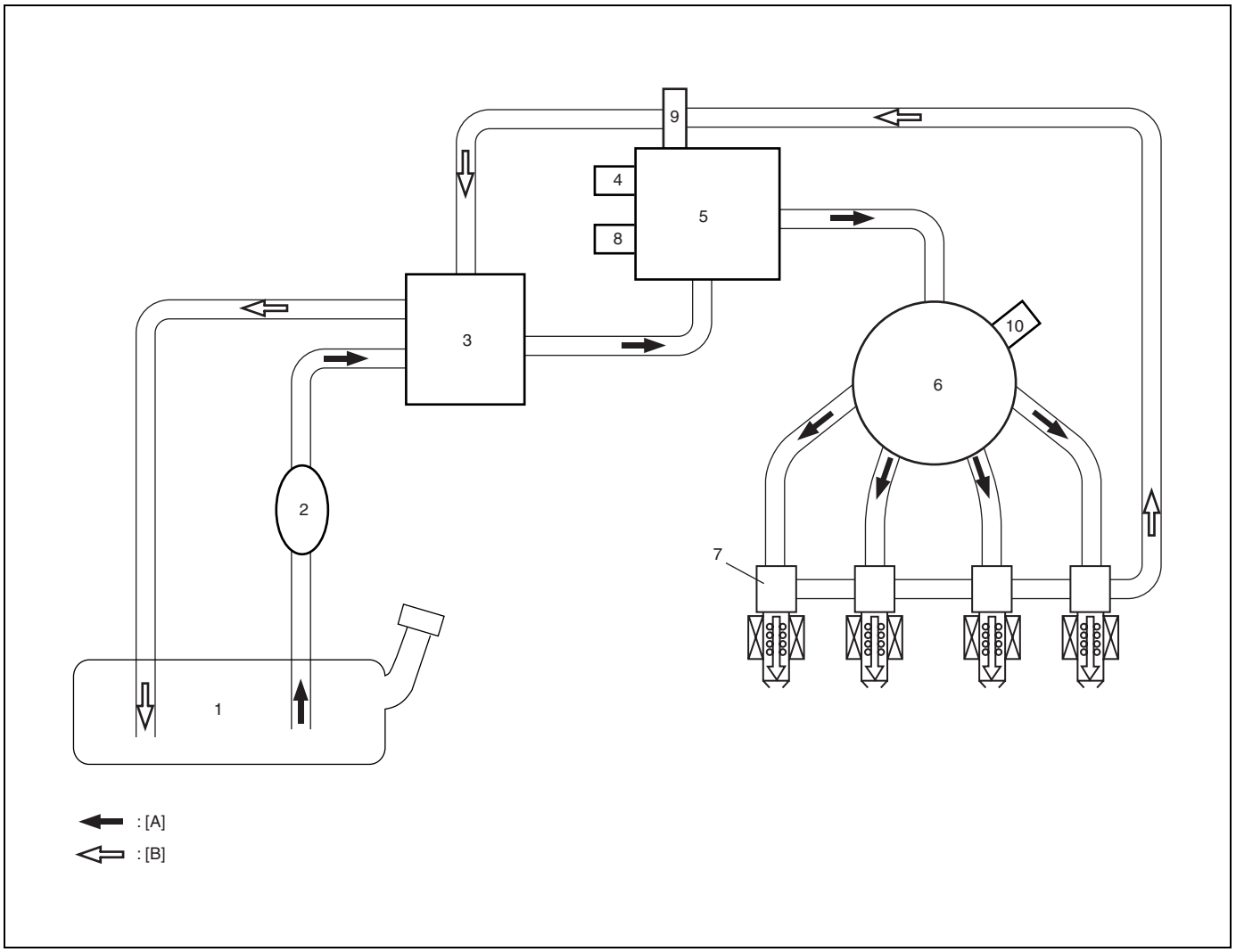

1. Fuel tank	6. Common rail (High pressure fuel injection rail)	[A]: Fuel feed line
2. Priming pump	7. Fuel injector	[B]: Fuel return line
3. Fuel filter	8. Fuel flow actuator	
4. Fuel temperature sensor	9. Venturi	
5. Injection pump (including high and low pressure pumps)	10. Fuel pressure sensor	

On-Vehicle Service

Idle Speed Inspection

1) Shift transmission into Neutral.
2) Start engine and warm it up to normal operating temperature.
3) Turn all electrical loads off.
4) Using SUZUKI scan tool, verify that idle speed is within specification.

Engine speed: 730 – 880 rpm

5) If not, refer to “Table 5 Rough Idle Speed (Pumping)” or “Table 6 Idle Speed Too High or Too Low” in Section 6-2.

Fuel Delivery System

WARNING:

- **Fuel vapor is hazardous. It can very easily ignite, causing serious injury and damage. Always keep sparks and flames away from fuel. Fuel line spills and leaks are dangerous. Fuel can ignite and cause serious injuries or death and damage.**
- **Fuel can also irritate skin and eyes. To prevent this, always complete the following "Precautions".**
- **Never disconnect fuel high-pressure line between injection pump and injectors under pressure, or fuel can be sprayed out under pressure.**
  Be sure to confirm that fuel high-pressure line is not under pressure referring "Fuel pressure relief confirmation procedure" in this section before disconnecting. If it is under pressure, wait till it is not under pressure.

CAUTION:

Before servicing the fuel delivery system, read all contents described in "Precautions in Fuel Delivery System"; otherwise not only the fuel delivery system but also the engine might be damaged.

Precautions in fuel delivery system

- The system is very sensitive to contamination. The risks caused by the introduction of contamination are:
  – damage or destruction of the high pressure injection system and the engine.
  – seizing or leaking of a component.
- When servicing on the high pressure direct injection system, must be performed under very clean conditions. This means that no impurities (particles a few microns in side) get into the system during dismantling or into the circuits via the fuel unions.
- The cleanliness principle must be applied from the filter to the injectors.
- Contamination is caused by:
  – metal or plastic chips,
  – paint,
  – fibres: boxes, brushes, paper, clothing, cloths,
  – foreign bodies such as hair,
  – ambient air,
  – etc.
- It is not possible to clean the engine using a high pressure washer because of the risk of damaging connections. In addition, moisture may collect in the connectors and create electrical connection problems.
- The system can inject the diesel into the engine at a pressure up to 1600 bars. Before carrying out any work, check that the injector rail is not under pressure and that the fuel temperature is not too high.

Instructions to be Followed Before Any Work is Carried out on The Injection System

- Ensure that you have the plugs (1) for the unions to be opened. Plugs are to be used once only. After use, they must be thrown away (once used they are soiled and cleaning is not sufficient to make them reusable). Unused plugs must be thrown away.

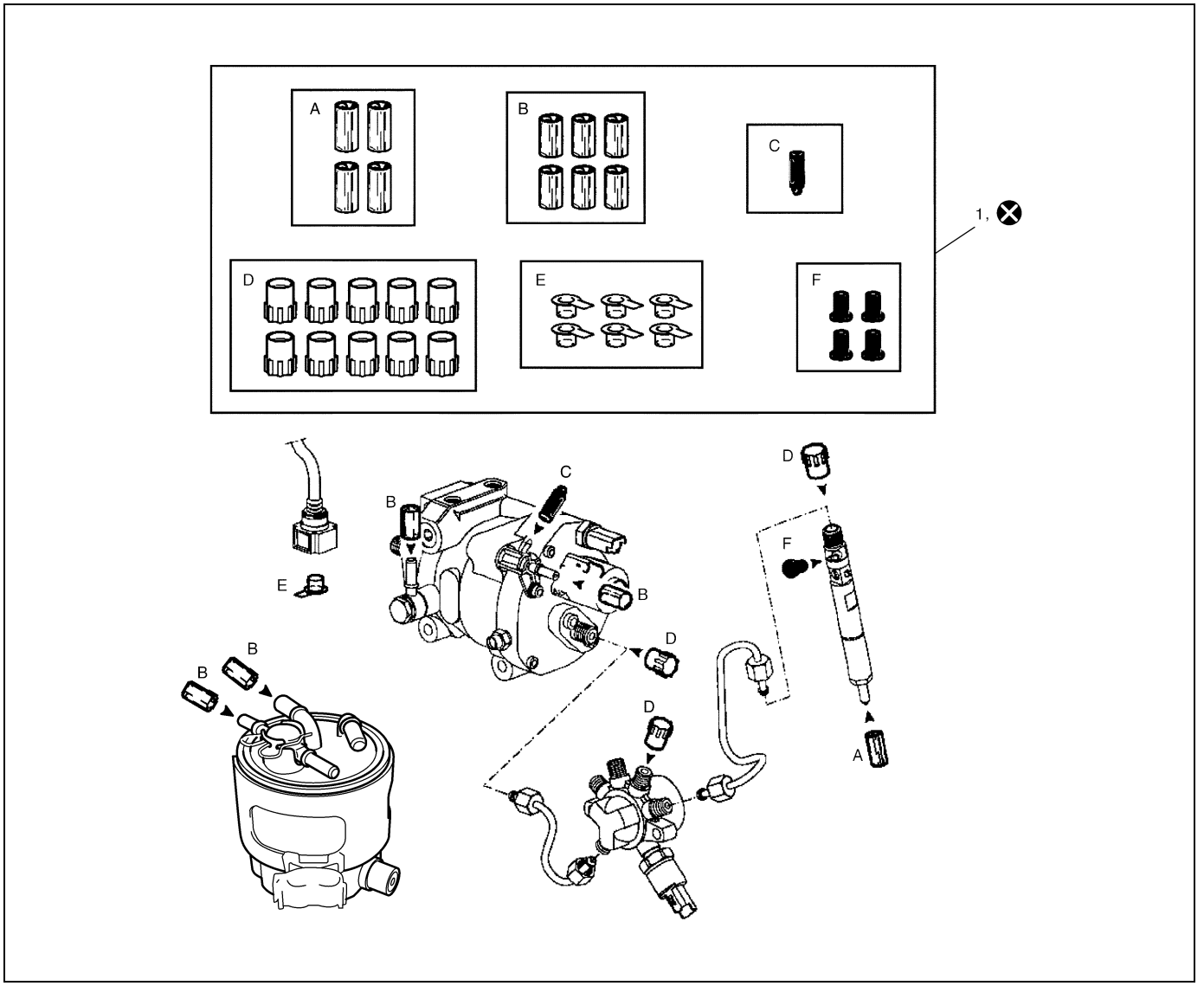

1.	Plug (Cap set available as a spare part: parts number 15733-84A00)
⊗	Do not reuse.

- Ensure that you have hermetically resealable plastic bags for storing removed parts. Stored parts will therefore be less subject to the risk of impurities. The bags must be used only once, and after use they must be thrown away.

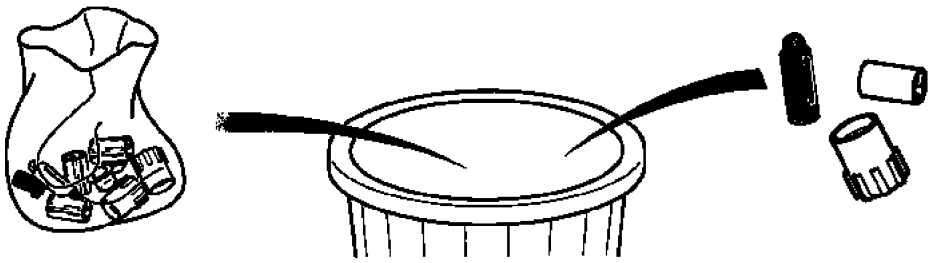

- Make sure that lint-free towelettes. The use of a normal cloth or paper for cleaning purposes is forbidden. These are not lint-free and may contaminate the fuel circuit of the system. Each lint-free cloth should only be used once.

Instructions to be Followed Before Opening The Fuel Circuit

- For each operation, use new thinner (used thinner contains impurities). Pour it into a clean receptacle.
- For each operation, use a clean brush which is in good condition (the brush must not shed its bristles).
- Use a brush and thinners to clean the connections to be opened.
- Blow compressed air over the cleaned parts (tools, cleaned the same way as the parts, connections and injection system zone). Check that no bristles remain adhered.
- Wash your hands before and during the operation if necessary.
- When wearing leather protective gloves, cover these with latex gloves.

Instructions to be Followed During The Operation

- As soon as the circuit is open, all openings must be plugged to prevent impurities from entering the system by using plug (available as a spare part). They must not, under any circumstances, be reused.
- Close the hermetically sealed bag, even if it has to be reopened shortly afterwards. Ambient air carries contamination.
- All components of the injection system that are removed must be stored in a hermetically sealed plastic bag once the plugs have been inserted.
- The use of a brush, thinner, bellows, sponge or normal cloth is strictly forbidden once the circuit has been opened.
  These items are likely to allow impurities to enter the system.
- A new component replacing an old one must not be removed from its packaging until it is to be fitted to the vehicle.

Fuel delivery system components

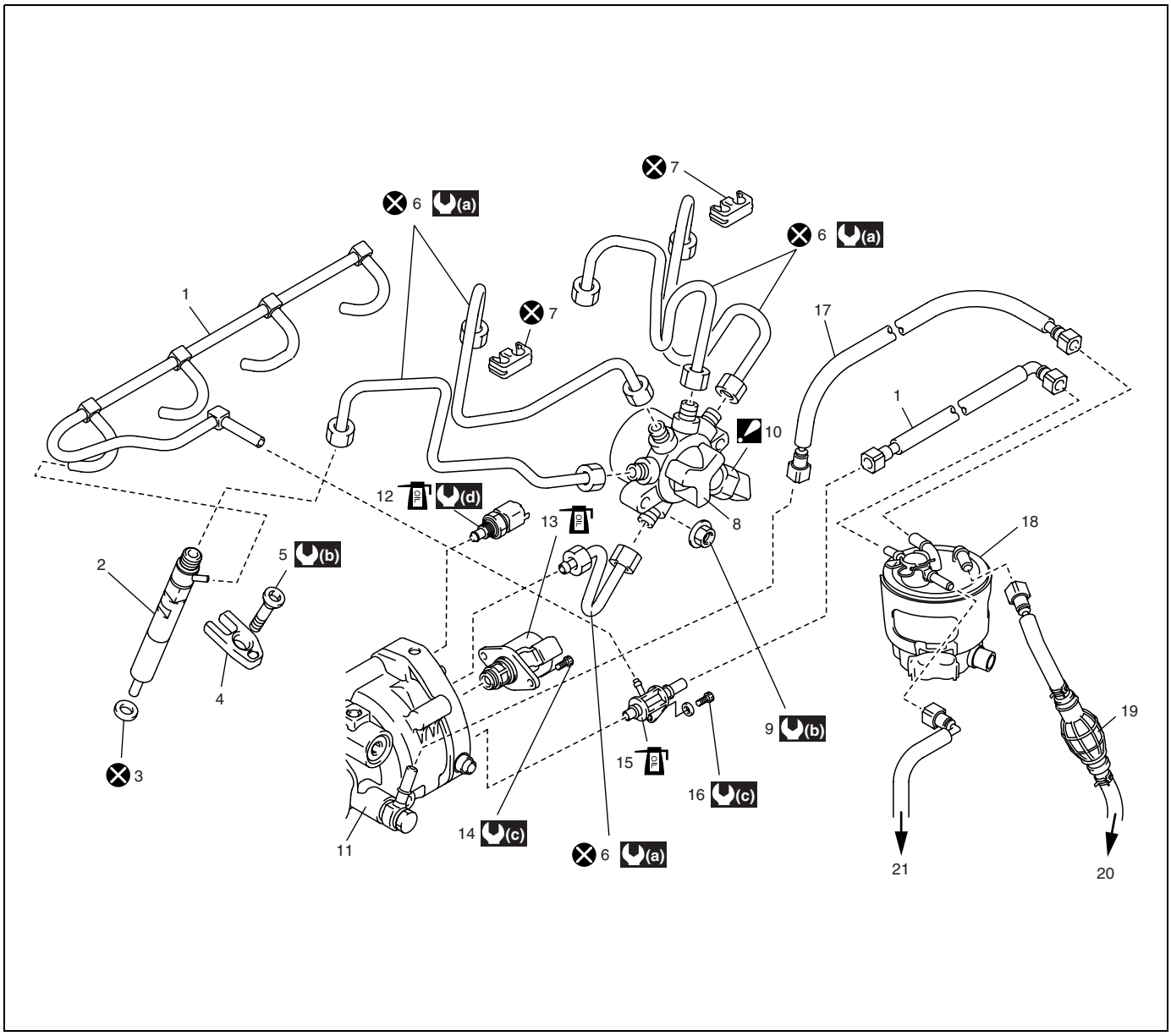

1. Fuel return hose	8. Common rail	15. Venturi : Apply oil (spare parts) to O-ring.	(a) : 38 N·m (3.8 kg-m, 27.5 lb-ft)
2. Fuel injector	9. Common rail nut	16. Venturi bolt	(b) : 28 N·m (2.8 kg-m, 20.5 lb-ft)
3. Sealing washer	10. Fuel pressure sensor : It is not possible to remove fuel pressure sensor from common rail.	17. Fuel feed hose	(c) : 5.5 N·m (0.55 kg-m, 4.0 lb-ft)
4. Fuel injector bracket	11. Injection pump	18. Fuel filter	(d) : 15 N·m (1.5 kg-m, 11.0 lb-ft)
5. Fuel injector bolt	12. Fuel temperature sensor : Apply oil (spare parts) to O-ring.	19. Priming pump	: Do not reuse.
6. High pressure pipe	13. Fuel flow actuator : Apply oil (spare parts) to O-ring.	20. To fuel feed pipe	
7. Clip	14. Fuel flow actuator bolt	21. To fuel return pipe	

High pressure pipes removal and installation

Removal

1) Check that engine is cold and fuel pressure is not under pressure referring to “Fuel Pressure Relief Confirmation Procedure” in this section.
2) Disconnect negative cable at battery.
3) Remove injector cover.

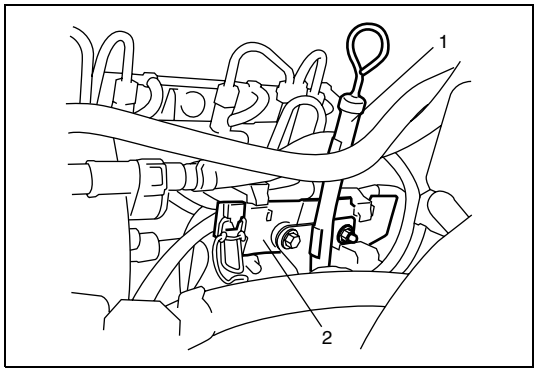

4) Remove oil level gauge guide (1) and injector cover bracket (2).

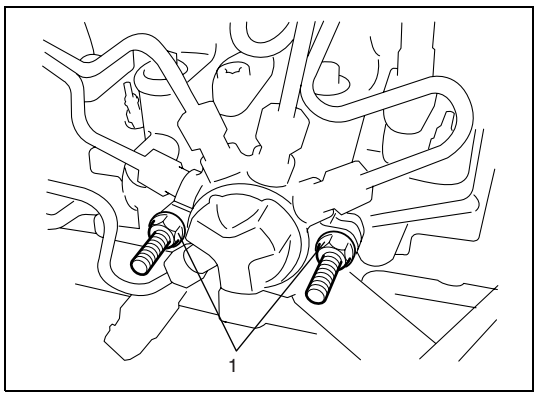

5) Loosen common rail nuts (1) a few turns.

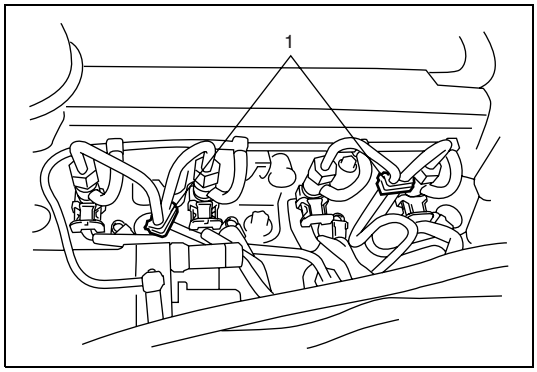

6) Remove clip (1) connecting high pressure pipes.

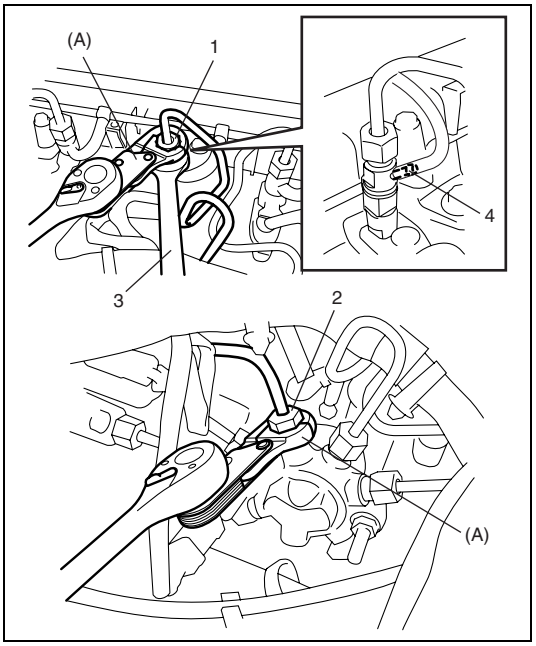

7) Remove high pressure pipes as follows.

a) For fuel injector – common rail pipe
   i) Loosen union nut of fuel injector side (1).
   ii) Loosen union nut of common rail side (2).

CAUTION:
When loosing union nut of fuel injector side, hold fuel injector with wrench (3) as shown.
Do not damage fuel return pipe (4) of fuel injector.

Special tool
(A): 09911-78110

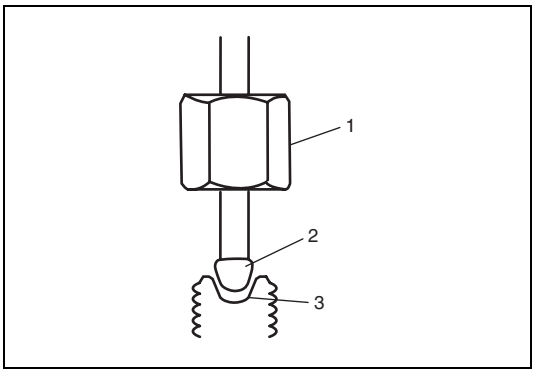

iii) Move union nut (1) along pipe keeping flange part (2) in contact with taper (3).

b) For injection pump – common rail pipe

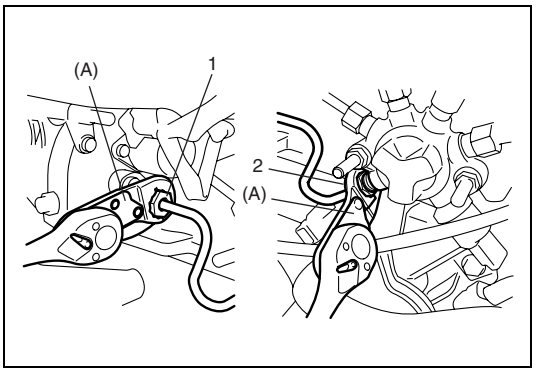

i) Loosen union nut of injection pump side (1).
ii) Loosen union nut of common rail side (2).

Special tool
(A): 09911-78110

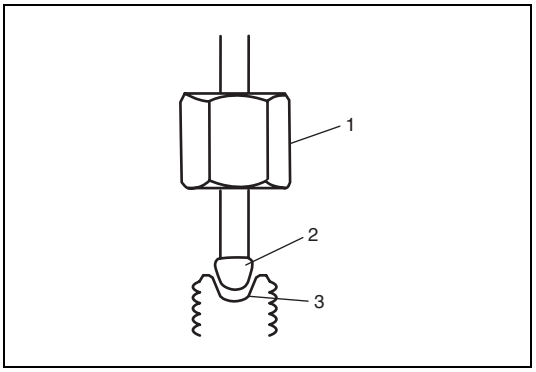

iii) Move union nut (1) along pipe keeping flange part (2) in contact with taper (3).

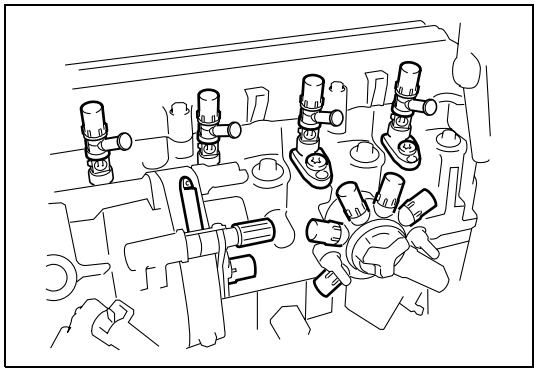

8) Plug all joint part of disconnected fuel injection circuit with cap available as a spare part to prevent them from entering dust. (Refer to “Precautions in Fuel Delivery System” in this section for parts number and handling).

Installation

CAUTION:

Do not reuse high pressure pipe because it has the possibility that fuel leaks out.

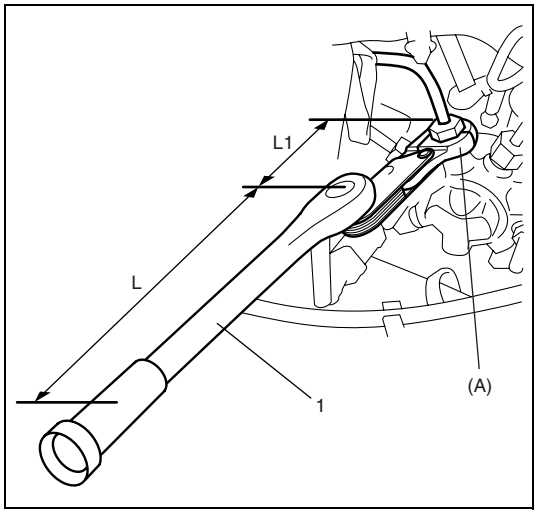

CAUTION:

In case of using extension special tool combined with torque wrench, reading value of torque wrench is smaller than specified tightening torque. When using extension special tool, reading value should be calculated according to below formula.

Tightening torque formula
M = T x L/(L + L1)
M: Reading value using extension special tool
T: Specified tightening torque
L: Length of torque wrench
L1: Length of special tool

NOTE:

Fit injection pump – common rail pipe before common rail - fuel injector pipes.

1) Remove high pressure pipes as follows.
   a) For fuel injector – common rail pipe
      i) Remove plugs (dust preventing cap) from common rail outlet and fuel injector inlet.

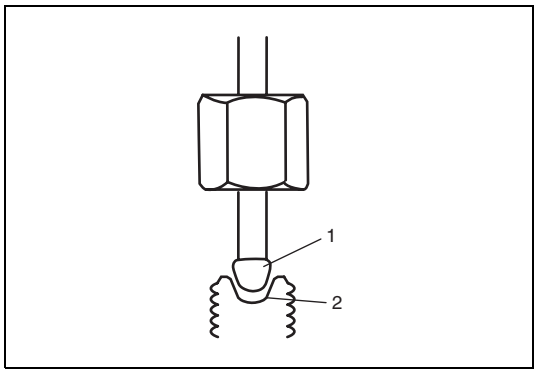

      ii) Insert high pressure pipe flange part (1) into taper (2) of fuel injector inlet.
      iii) Insert high pressure pipe flange part (1) into taper (2) of common rail outlet.

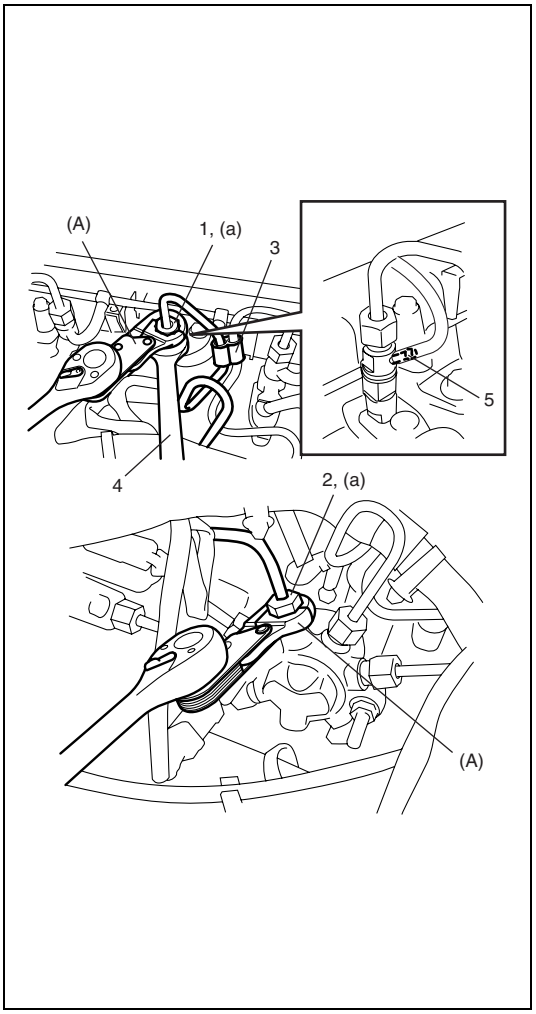

iv) Tighten fuel injector union nut (1) then common rail union nut (2) by hand.
v) Install new clip (3) to high pressure pipes.
vi) Tighten fuel injector union nut then common rail union nut to specified torque using special tool.

CAUTION:

- **Do not touch pipes with wrench when tightening union nuts.**
- **When tightening union nut of fuel injector side, hold fuel injector with wrench (4) as shown.**
- **Do not damage fuel return pipe (5) of fuel injector.**

Special tool
(A): 09911-78110

Tightening torque
High pressure pipe union nut
(a): 38 N·m (3.8 kg-m, 27.5 lb-ft) (See NOTE below.)

NOTE:

In case of using extension special tool combined with torque wrench, reading torque depends on the length of the torque wrench.
Therefore, calculate reading torque by using "Tightening Torque Formula" described earlier in this installation procedure.

b) For injection pump – common rail pipe
i) Remove plugs (dust prevent cap) from common rail outlet and fuel injector inlet.

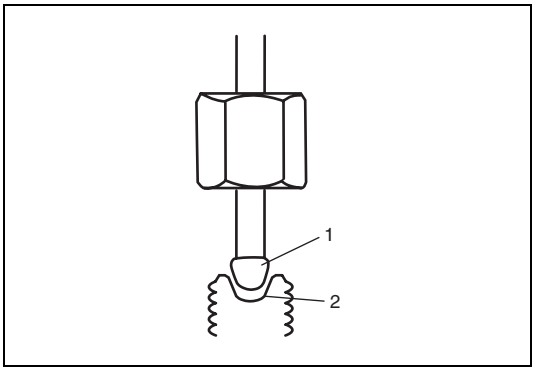

ii) Insert high pressure pipe flange part (1) into taper (2) of fuel injector inlet.
iii) Insert high pressure pipe flange part (1) into taper (2) of common rail outlet.

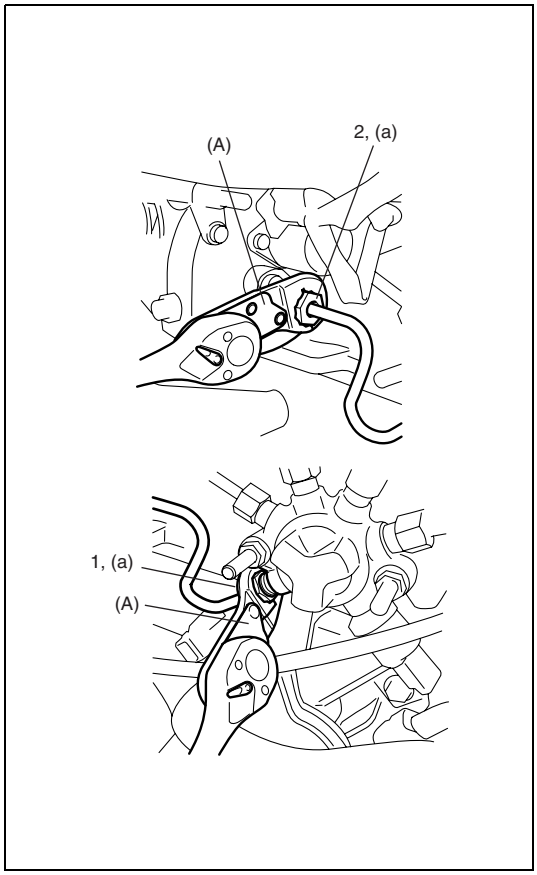

iv) Tighten common rail union nut (1) then injection pump union nut (2) by hand.
v) Tighten common rail union nut then injection pump union nut to specified torque using special tool.

CAUTION:
Do not touch pipes with wrench when tightening union nuts.

Special tool
(A): 09911-78110

Tightening torque
High pressure pipe union nut
(a): 38 N·m (3.8 kg-m, 27.5 lb-ft) (See NOTE below.)

NOTE:
In case of using extension special tool combined with torque wrench, reading torque depends on the length of the torque wrench.
Therefore, calculate reading torque by using "Tightening Torque Formula" described earlier in this installation procedure.

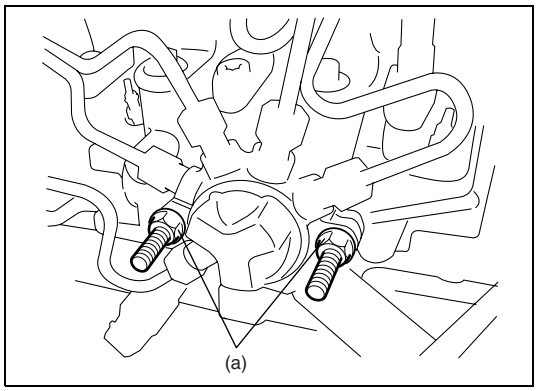

2) Tighten common rail nuts to specified torque.

Tightening torque
Common rail nut
(a): 28 N·m (2.8 kg-m, 20.5 lb-ft)

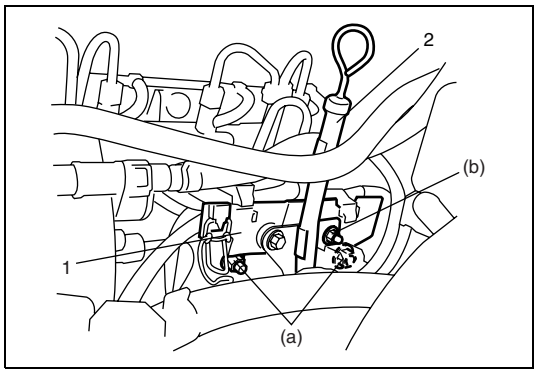

3) Install injector cover bracket (1) and oil level gauge guide (2). Tighten oil level gauge guide nuts to specified torque.

Tightening torque
Injector cover bracket nut
(a): 12 N·m (1.2 kg-m, 9.0 lb-ft)
Oil level gauge guide nut
(b): 21 N·m (2.1 kg-m, 15.5 lb-ft)

4) Install injector cover.
5) Connect negative cable to battery.
6) Check fuel leakage referring to “Fuel Leakage Check” in this section.

Fuel injector removal and installation

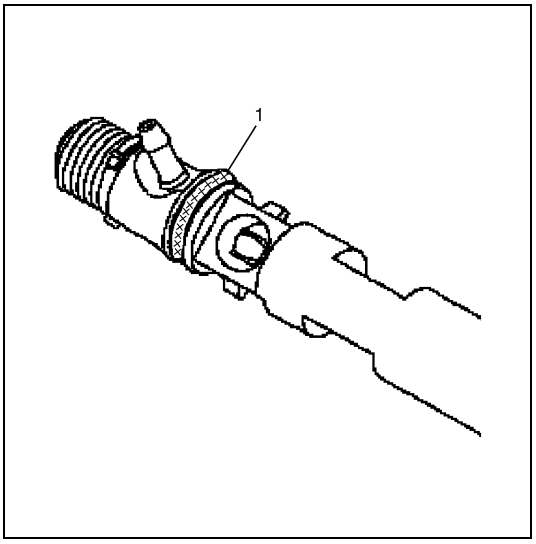

NOTE:

The calibration code (1) is the code that is given to each fuel injector, and it represents the performance characteristics of the fuel injector. It is registered in ECM, and ECM controls fuel injection according to the performance characteristics of the fuel injector. Therefore, after removing fuel injectors, be sure to install them as they were. In case that the fuel injectors were replaced with new ones, be sure to register each calibration code in ECM referring to “Fuel Injector Registration” under “ECM Registration (Programming)” in this section. If it is not registered correctly, DTC is stored in ECM and warning light is turned ON. Also calibration codes registration in ECM can be checked by SUZUKI scan tool.

Removal

1) Check that engine is cold and fuel pressure is not under pressure referring to “Fuel Pressure Relief Confirmation Procedure” in this section.
2) Disconnect negative (–) cable at battery.
3) Remove injector cover.

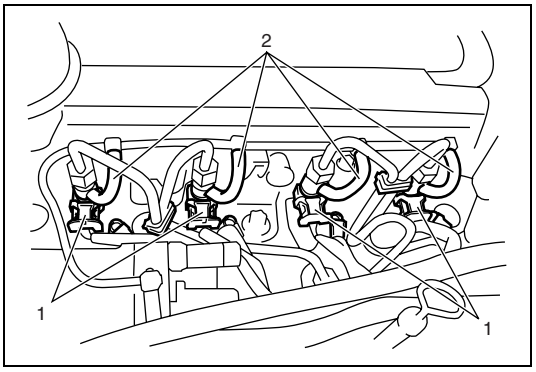

4) Disconnect fuel injector connector (1).
5) Disconnect return hose (2) from fuel injector.

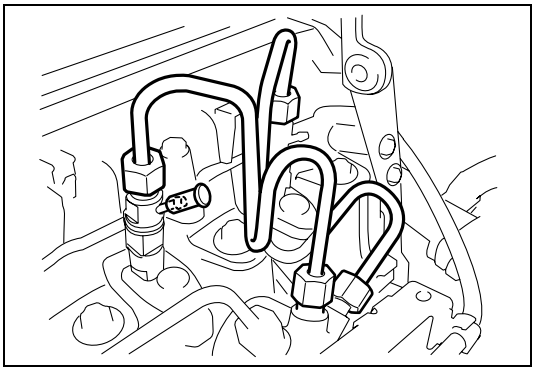

6) Plug fuel return pipe of fuel injector with cap available as a spare part to prevent them from entering dust. (Refer to “Precautions in Fuel Delivery System” in this section for parts number and handling.)

7) Remove high pressure pipe referring to “High Pressure Pipes Removal and Installation” in this section.

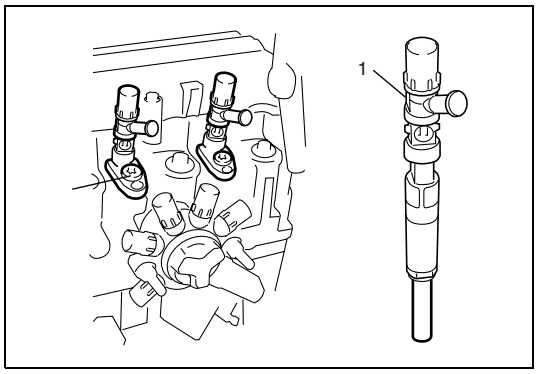

8) Remove fuel injector (1) from cylinder head.
9) Remove searing washer from cylinder head hole.
10) Plug fuel injector nozzle with cap available as a spare part to prevent them from entering dust. (Refer to “Precautions in Fuel Delivery System” in this section for parts number and handling.)

Installation

1) Clean fuel injector installing hole of cylinder head, fuel injector body and fuel injector bracket using a lint-free cloth dipped in clean solvent.

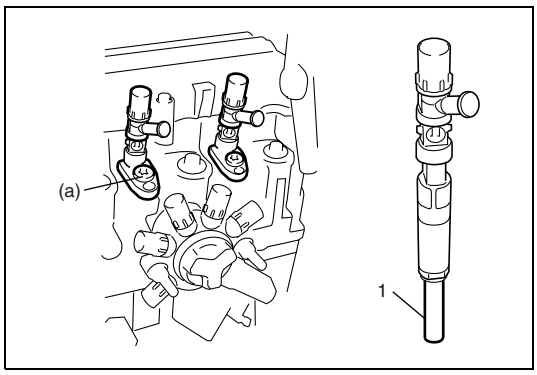

2) Remove plug (dust preventing cap) (1) from fuel injector nozzle.
3) Install new searing washer to cylinder head.
4) Install fuel injector to cylinder head.
   Tighten fuel injector bracket bolt to specified torque.

Tightening torque
Fuel injector bracket bolt
(a): 28 N·m (2.8 kg-m, 20.5 lb-ft)

5) Install new high pressure pipe referring to “High Pressure Pipes Removal and Installation” in this section.

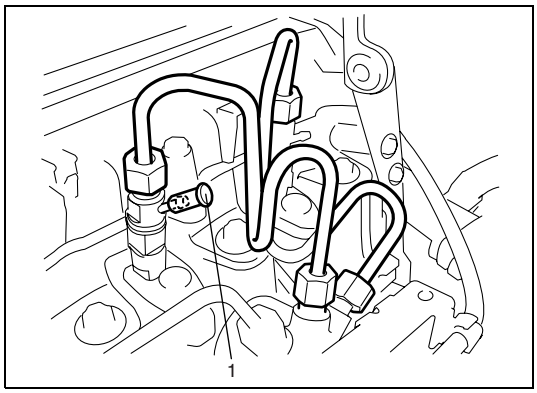

6) Remove plug (dust preventing cap) (1) from fuel return pipe of fuel injector.

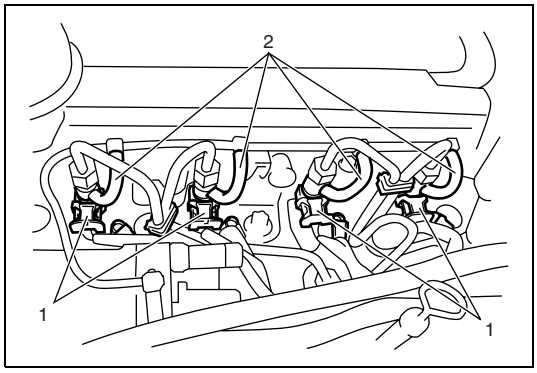

7) Connect return hose (2) to fuel injector.
8) Connect fuel injector connector (1).
9) Install injector cover.

10) Connect negative cable to battery.
11) Check fuel leakage referring to “Fuel Leakage Check” in this section.

Injection pump removal and installation

NOTE:

After replacing injection pump, perform “High Pressure Pump Data Initialization” using SUZUKI scan tool.

Removal

1) Check that engine is cold and fuel pressure is not under pressure referring to “Fuel Pressure Relief Confirmation Procedure” in this section.
2) Disconnect negative cable at battery.
3) Remove timing belt referring to “Timing Belt and Belt Tensioner Removal and Installation” in Section 6A2.

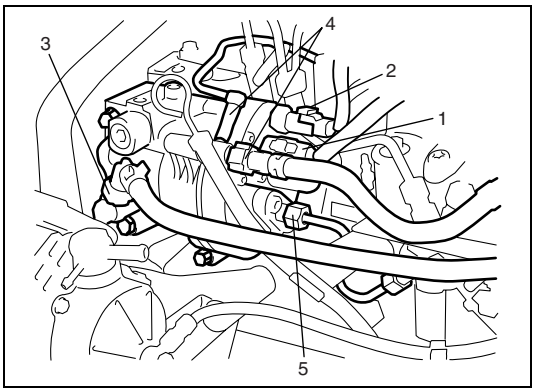

4) Disconnect connectors from fuel flow actuator (1) and fuel temperature sensor (2).
5) Disconnect fuel feed hose (3) and fuel return hoses (4) from injection pump.
6) Remove high pressure pipe (5) referring to “High Pressure Pipes Removal and Installation” in this section.

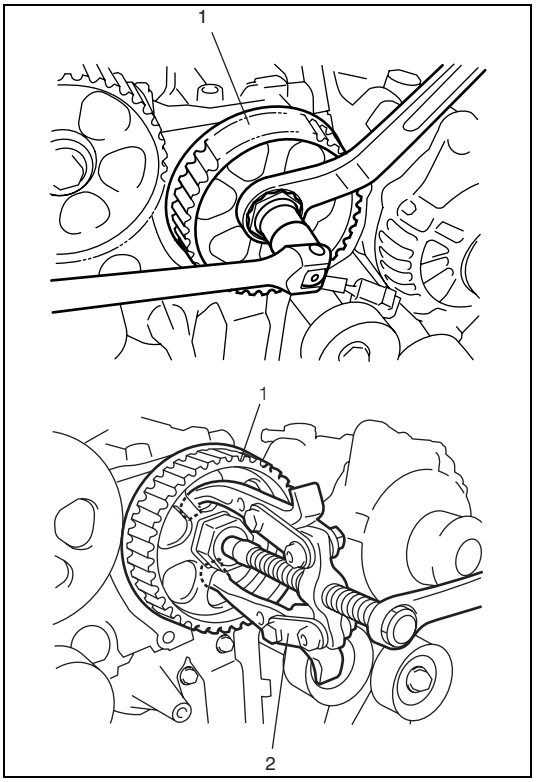

7) Remove injection pump pulley (1) as follows, if necessary.
   a) Remove injection pump pulley nut.
   b) Remove injection pump pulley using puller (2).

CAUTION:

Be sure to apply claws of puller to the specified positions on pulley indicated in figure. Applying to the other positions may break pulley.

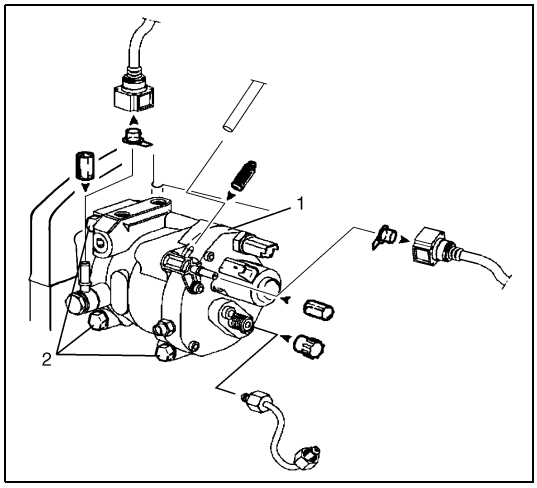

8) Plug all joint part of disconnected fuel injection circuit with cap available as a spare part to prevent them from entering dust. (Refer to “Precautions in Fuel Delivery System” in this section for parts number and handling.)
9) Remove injection pump (1) from cylinder head by removing 3 bolts (2).

Installation

Reverse removal procedure for installation noting the following.

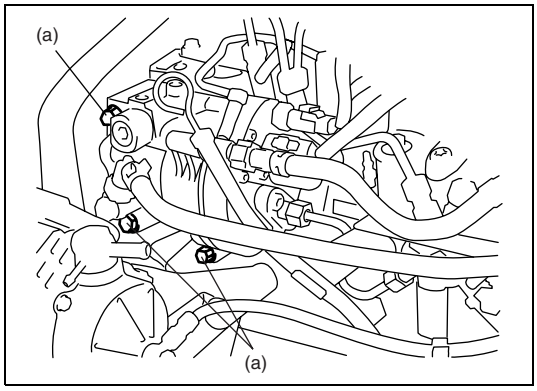

- Tighten injection pump bolts to specified torque.

Tightening torque
Injection pump bolt (a): 27 N·m (2.7 kg-m, 19.5 lb-ft)

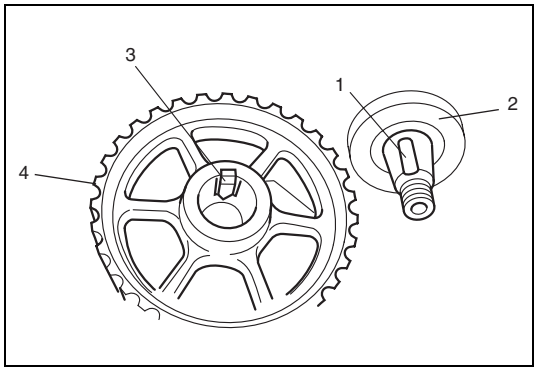

- Install injection pump pulley (4) to injection pump (2) aligning key (3) to groove (1).

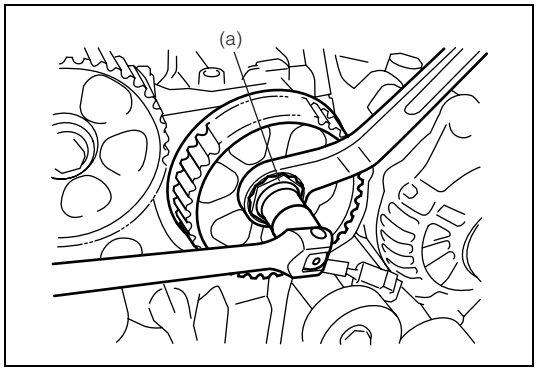

- Tighten injection pulley nut to specified torque.

Tightening torque
Injection pump pulley nut (a): 15 N·m (1.5 kg-m, 11.0 lb-ft) and 60° by the specified procedure.

- Install new high pressure pipe referring to “High Pressure Pipes Removal and Installation” in this section.
- Install timing belt referring to “Timing Belt and Belt Tensioner Removal and Installation” in Section 6A2.
- Check fuel leakage referring to “Fuel Leakage Check” in this section.
- Perform “High Pressure Pump Data Initialization” under “ECM Registration (Programming)” in this section.

Venturi removal and installation

Removal

1) Check that engine is cold and fuel pressure is not under pressure referring to “Fuel Pressure Relief Confirmation Procedure” in this section.
2) Remove injector cover.

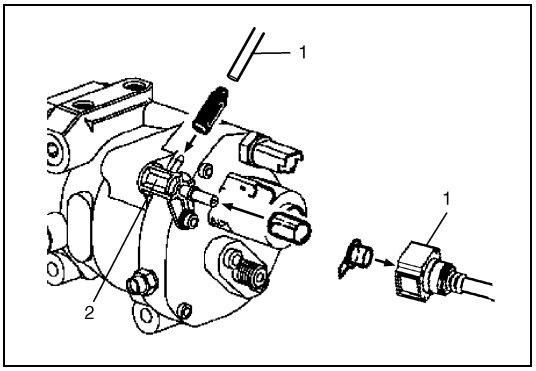

3) Disconnect return hoses (1) from venturi (2) on injection pump.
4) Plug disconnected hose and venturi on injection pump with cap available as a spare part to prevent them from entering dust. (Refer to “Precautions in Fuel Delivery System” in this section for parts number and handling.)
5) Remove venturi from injection pump.

Installation

Reverse removal procedure for installation noting the following.

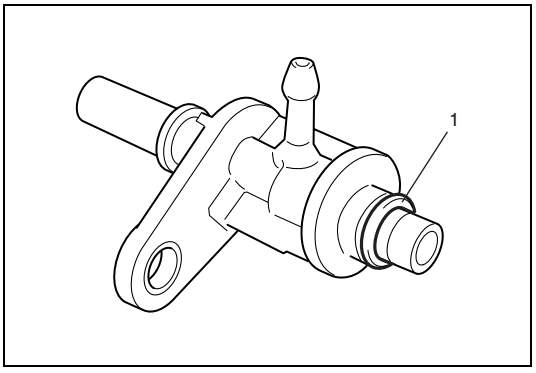

- Apply oil (spare parts) to O-ring (1) of venturi.
- Be careful not to damage O-ring when installing venturi.

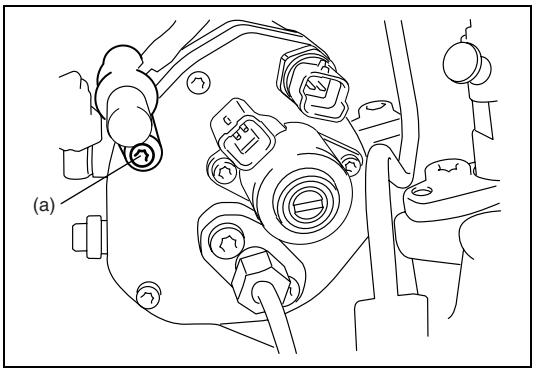

- Tighten venturi bolt to specified torque.

Tightening torque
Venturi bolt (a): 5.5 N·m (0.55 kg-m, 4.0 lb-ft)

- Check fuel leakage referring to “Fuel Leakage Check” in this section.

Electronic Control System

Engine control module (ECM) removal and installation

CAUTION:
As ECM consists of precision parts, be careful not to expose it to excessive shock.

NOTE:

- **When ECM and immobilizer control module with a transponder code registered are connected and the ignition switch is turned on, immobilizer control module code is registered in ECM automatically. Note that immobilizer control module code registered in ECM cannot be erased or overwritten and that the ECM having the registered immobilizer control module code cannot be reused for another vehicle.**
- **When ECM is replaced with a new one, program new ECM and register engine and vehicle information referring to "ECM Registration (Programming)" in this section.**

Removal

1) Disconnect negative cable at battery.

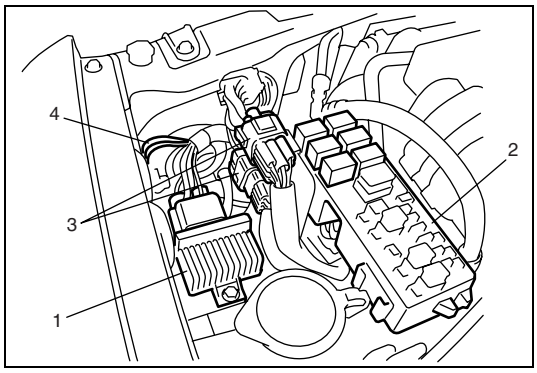

2) Detach pre-heating unit (1), relay box (2) and harness connectors (3) from ECM bracket.
3) Disconnect ground wire harness (4) from vehicle body.

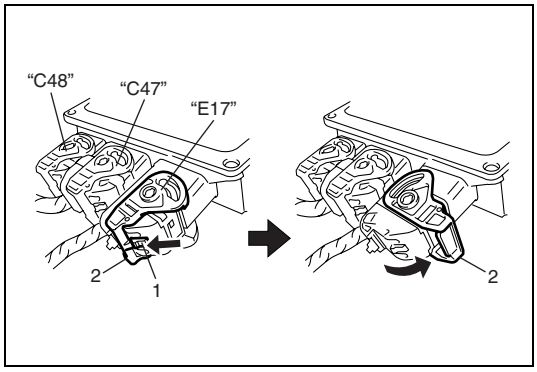

4) Disconnect connectors from ECM in order of "E17", "C47" and "C48" as follows.
   a) Push lock (1) to release locking of lock lever (2).
   b) Turn the lock lever to arrow direction until it stops.

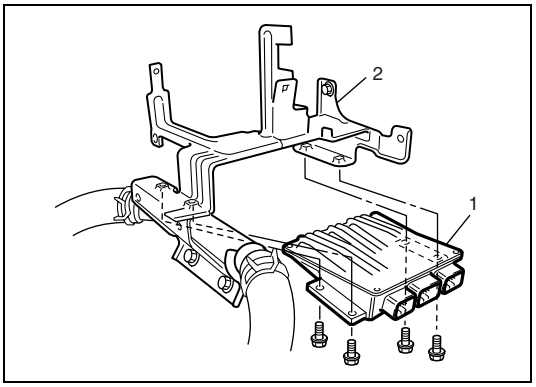

5) Remove ECM (1) from ECM bracket (2).

Installation

Reverse removal procedure for installation.

NOTE:

When installing new ECM, perform “Registration for ECM Replacement” in this section.

ECM registration (Programming)

NOTE:

New ECM itself has no program to control engine in it. After replacing ECM with a new one, be sure to write engine control program in it first and then input engine and vehicle information.

The following information is registered and calibrated in ECM.

- Fuel injector calibration codes
- Vehicle variant (equipment such as additional heater plug, air conditioning and VSS)
- Injection correction data
- Air charge data
- Engine control data
- EGR valve data
- High pressure pump data

If any one of the following parts is replaced, register or initialize the necessary information in ECM as shown in table below.

Replacement part	Registered/Initialized data	Reference
ECM	**NOTE:** **Before registering following data, make sure that engine control program has been written in ECM.** Engine and vehicle information: • Fuel injector calibration codes • Vehicle variant • Injection correction data • Air charge data • Engine control data	Go to “Registration for ECM Replacement”.
Fuel injector(s)	Fuel injector calibration code(s)	Go to “Fuel Injector Registration”.
EGR valve	EGR valve data	Go to “EGR Valve Data Initialization”.
High pressure pump	High pressure pump data	Go to “High Pressure Pump Data Initialization”.

Registration for ECM Replacement

NOTE:

- **If engine and vehicle information cannot be downloaded from ECM due to ECM malfunction register "Fuel injector calibration codes" and "Vehicle variant" in new ECM manually according to "Fuel Injector Registration" and "Vehicle Variant Registration" and perform "High Pressure Pump Data Initialization" instructed by SUZUKI scan tool.**
- **For details of SUZUKI scan tool, reprogramming tool or software referring to its operator's manual.**

1) Replace ECM with new one referring to "ECM Removal and Installation" in this section.
2) Using Suzuki Pass-Thru Reprogramming Software and Suzuki Pass-Thru Reprogramming Tool, program new ECM by writing data (Calibration file) in it referring to "Suzuki Pass-Thru Reprogramming Tool Operator's Manual".
3) Register data (engine and vehicle information) saved in memory of previous ECM (ECM installed in vehicle being repaired) in new ECM according to procedure described below.
   a) Replace new ECM once installed to vehicle with previous ECM.
   b) Upload "fuel injector calibration codes" registered in previous ECM into SUZUKI scan tool.
   c) Replace previous ECM with new ECM programmed in step 2) and download "Fuel injector calibration codes" in SUZUKI scan tool to new ECM.
4) Using same procedure of above steps a), b) and c), download following data into new ECM one by one.
   – Injection correction data
   – Air charge data
   – Engine control data
5) Register "Vehicle variant" in new ECM using SUZUKI scan tool.

Fuel Injector Registration

In case of the following, register "Fuel injector calibration code" of each fuel injector manually in ECM, by reading fuel injector calibration code on each fuel injector using SUZUKI scan tool.

- After one or more fuel injector(s) is replaced
- If engine and vehicle information ("fuel injector calibration codes") cannot be downloaded from ECM

Vehicle Variant Registration

In case of the followings, register vehicle variant (equipment such as additional heater plug, air conditioning and VSS) by using SUZUKI scan tool.

- When ECM is replaced.
- When vehicle equipment is added or removed.

EGR Valve Data Initialization

After EGR valve is replaced with new one or used one, initialize valve position by using SUZUKI scan tool.

High Pressure Pump Data Initialization

After high pressure pump (Injection pump) is replaced, initialize fuel volume information in high pressure pump by using SUZUKI scan tool.

APP sensor removal and installation

Removal

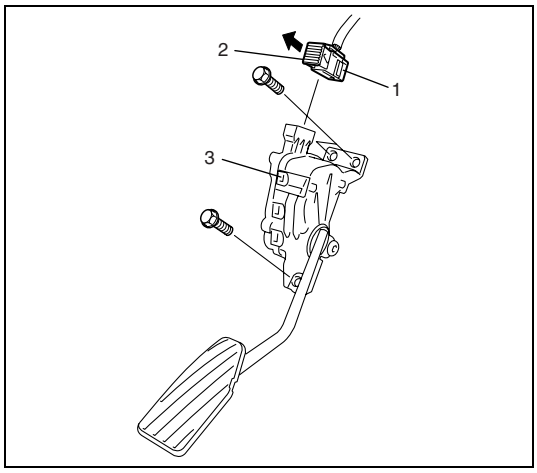

1) Disconnect negative cable at battery.
2) Disconnect connector (1) from APP sensor by pulling the lock lever (2).
3) Remove accelerator pedal assembly from accelerator pedal bracket.

Installation

Reverse removal procedure for installation noting the followings.

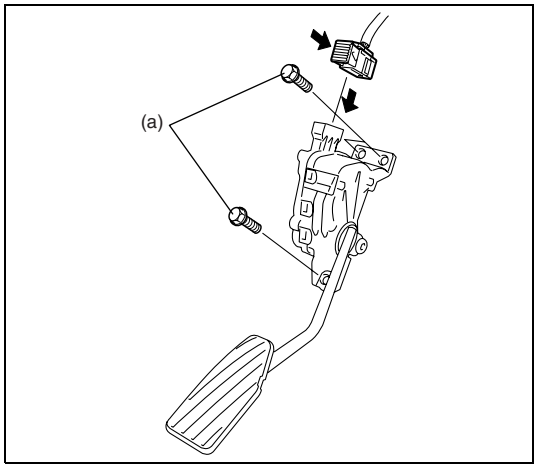

- Connect APP sensor connector securely.
- Tighten accelerator pedal assembly mounting bolts to specified torque.

Tightening torque
Accelerator pedal mounting bolt
(a): 6 N·m (6.0 kg-m, 4.5 lb-ft)

APP sensor inspection

1) Disconnect negative cable at battery.
2) Remove accelerator pedal assembly referring to “APP Sensor Removal and Installation” in this section.
3) Using ohmmeter, check resistance between terminals under each condition given in table below.
   If check result is not satisfactory, replace accelerator pedal assembly.

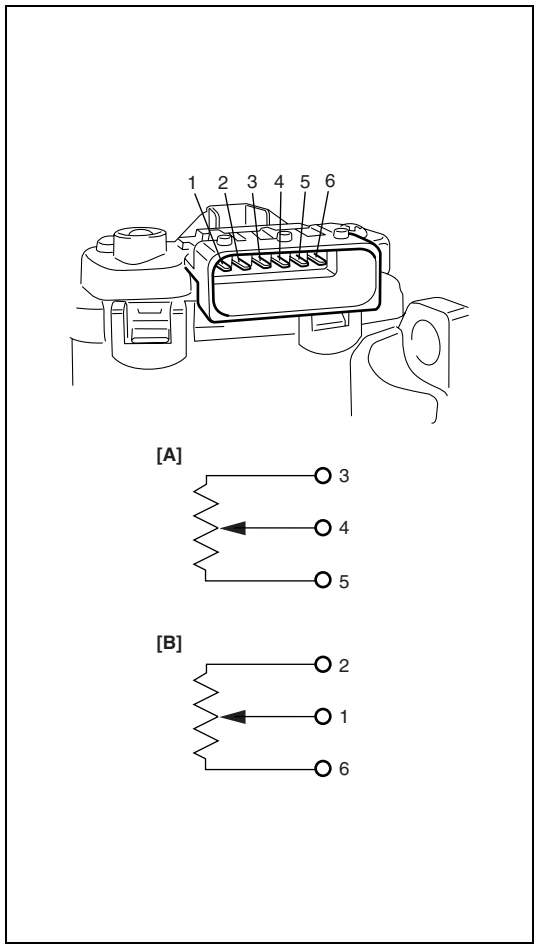

APP sensor resistance

	TERMINALS	RESISTANCE
APP sensor 1	Between 3 and 5 terminals	0.67 – 1.69 kΩ
	Between 4 and 5 terminals	1.134 – 1.018 kΩ, varying according to accelerator pedal depressing.
APP sensor 2	Between 2 and 6 terminals	1.17 – 2.48 kΩ
	Between 1 and 6 terminals	1.100 – 1.796 kΩ, varying according to accelerator pedal depressing.

[A]: APP sensor 1
[B]: APP sensor 2
1. Output voltage terminal (APP sensor 2)
2. Reference voltage terminal (APP sensor 2)
3. Reference voltage terminal (APP sensor 1)
4. Output voltage terminal (APP sensor 1)
5. Ground terminal (APP sensor 1)
6. Ground terminal (APP sensor 2)

4) Connect pedal position sensor connector securely.
5) Connect negative cable to battery.

Fuel temperature sensor removal and installation

Removal

1) Check that engine is cold and fuel pressure is not under pressure referring to “Fuel Pressure Relief Confirmation Procedure” in this section.
2) Disconnect negative (–) cable at battery.
3) Remove injector cover.

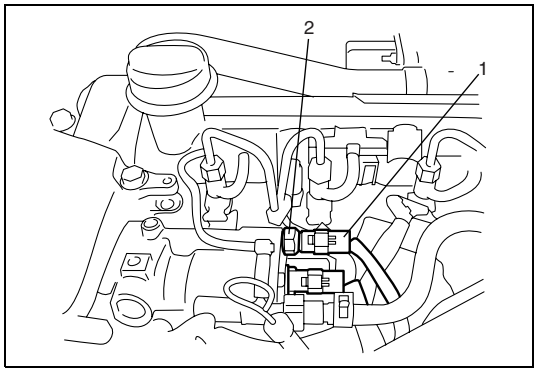

4) Disconnect fuel temperature sensor connector (1).
5) Remove fuel temperature sensor (2) from injection pump.

Installation

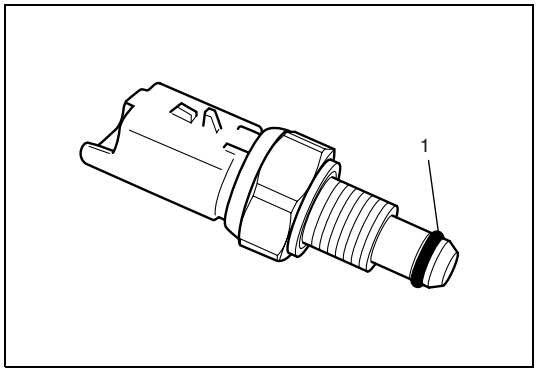

1) Apply oil (spare parts) to O-ring (1) of fuel temperature sensor.

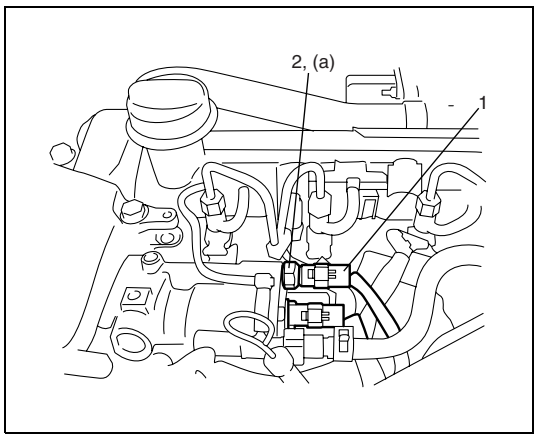

2) Install fuel temperature sensor (2) to injection pump.
   Tighten fuel temperature sensor to specified torque.

CAUTION:
Be careful not to damage O-ring when installing fuel temperature sensor.

Tightening torque
Fuel temperature sensor
(a): 15 N·m (1.5 kg-m, 11.0 lb-ft)

3) Connect fuel temperature sensor connector (1).
4) Install injector cover.
5) Connect negative cable to battery.
6) Check fuel leakage referring to “Fuel Leakage Check” in this section.

Fuel flow actuator removal and installation

Removal

1) Check that engine is cold and fuel pressure is not under pressure referring to “Fuel Pressure Relief Confirmation Procedure” in this section.
2) Disconnect negative (–) cable at battery.
3) Remove injector cover.

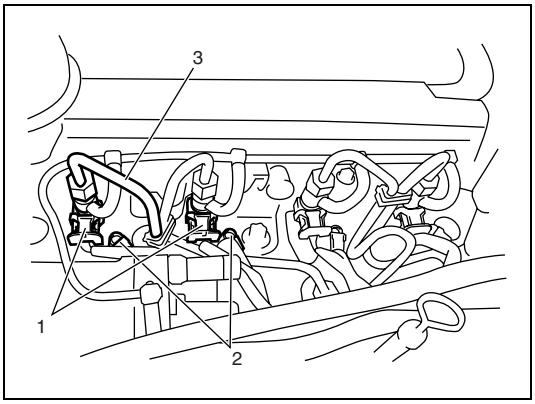

4) Remove injector cover.
5) Disconnect fuel injector connectors (1) and glow plug connectors (2) of No.3 and No.4 cylinders.
6) Remove high pressure pipe (3) of No.4 cylinder referring to “High Pressure Pipes Removal and Installation” in this section.

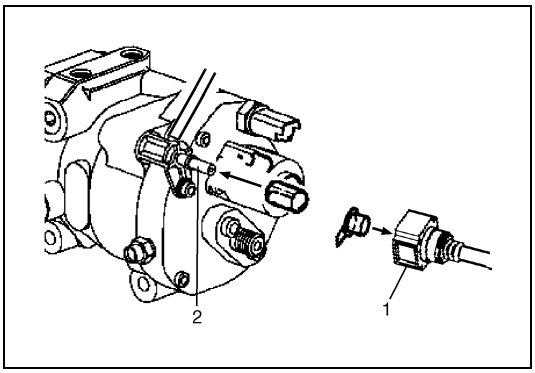

7) Disconnect return hose (1) from venturi (2) on injection pump.
8) Plug disconnected hose and venturi of injection pump with cap available as a spare part to prevent them from entering dust. (Refer to “Precautions in Fuel Delivery System” in this section for parts number and handling.)

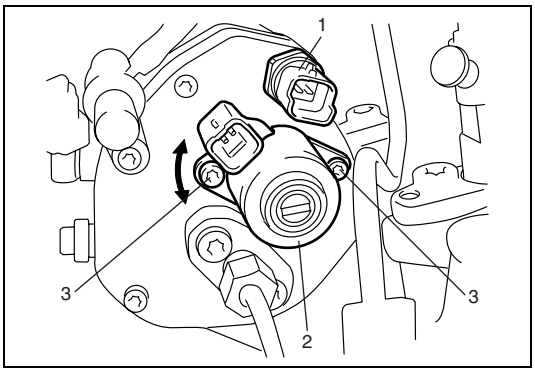

9) Disconnect connectors from fuel temperature sensor (1) and fuel flow actuator (2).
10) Remove fuel flow actuator screws (3).
11) Pull out fuel flow actuator by hand using small successive turns.

CAUTION:

Do not use fuel flow actuator connector as a lever arm when turning fuel flow actuator.

Installation

For installation, reverse removal procedure noting the following.

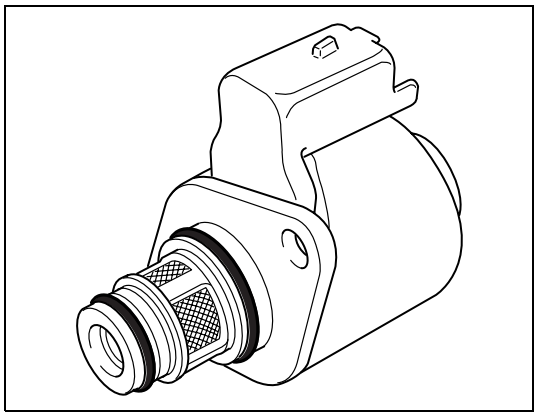

- Do not apply to O-rings of fuel flow actuator with grease or used diesel oil. Apply oil (spare parts) to O-ring of fuel flow actuator.

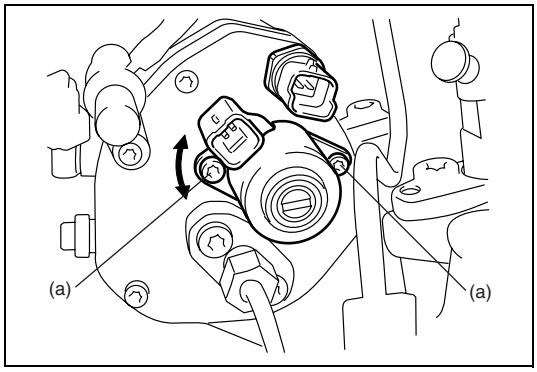

- Tighten fuel flow actuator bolts to specified torque.

Tightening torque
Fuel flow actuator bolt
(a): 5.5 N·m (0.55 kg-m, 4.0 lb-ft)

- Use new high pressure pipe of No.4 cylinder referring to “High Pressure Pipes Removal and Installation” in this section.
- Check fuel leakage referring to “Fuel Leakage Check” in this section.

Engine coolant temperature sensor (ECT sensor) removal and installation

Removal

1) Disconnect negative (–) cable at battery.
2) Drain cooling system.
3) Remove EGR valve referring to “EGR Valve and Intake Pipe Removal and Installation” in Section 6A2.

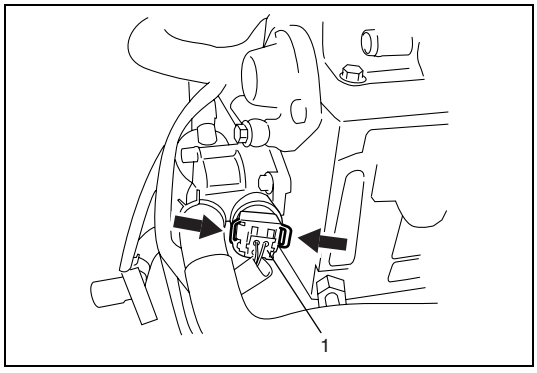

4) Disconnect ECT sensor connector (1) with unlocked connector lock.

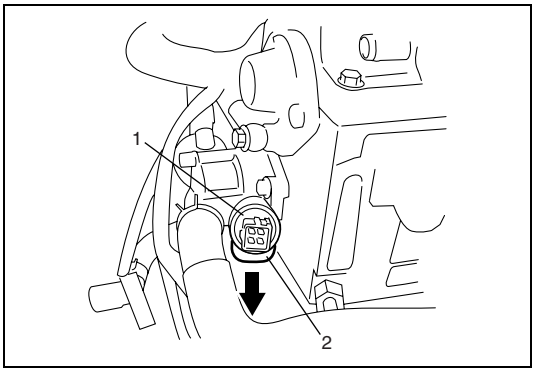

5) Remove ECT sensor (1) from thermostat assembly by removing clip (2).

Installation

Reverse removal procedure for installation noting the following.

- Check ECT sensor O-ring for damage.
  If malfunction is found, replace ECT sensor.
- Install EGR valve referring to “EGR Valve and Intake Pipe Removal and Installation” in Section 6A2.”
- Refill cooling system referring to “Cooling System Refill” in Section 6B2.
- Check cooling system leakage referring to “Cooling System Service” in Section 6B2.

Crankshaft position (CKP) sensor (engine speed sensor) removal and installation

Removal

1) Disconnect negative (–) cable at battery.
2) Remove exhaust pipe and exhaust pipe bracket referring to “Exhaust System Components” in Section 6K2.

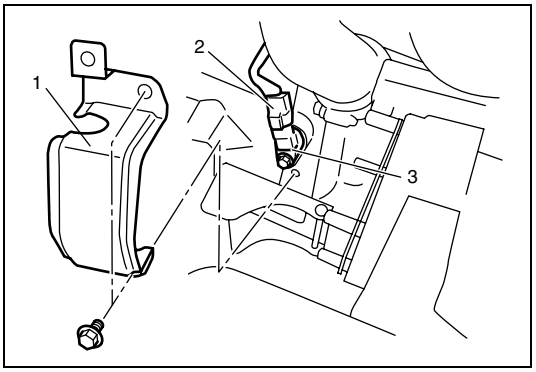

3) Remove CKP sensor cover (1).
4) Disconnect CKP sensor connector (2).
5) Remove CKP sensor (3) from transmission case.

Installation

Reverse removal procedure for installation noting the following.

- Clean CKP sensor and sensor rotor teeth before installation.
- Tighten CKP sensor bolts to specified torque.

Tightening torque
CKP sensor bolt (a): 12 N·m (1.2 kg-m, 9.0 lb-ft)

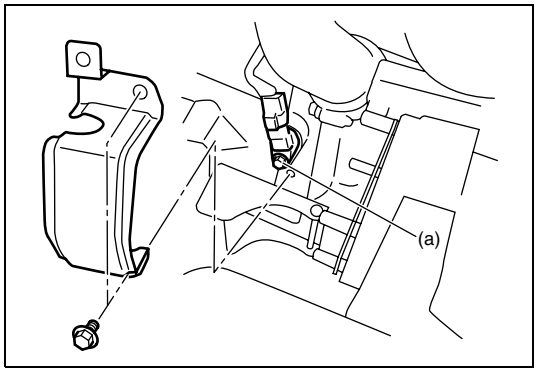

- Install exhaust pipe and exhaust pipe bracket referring to “Exhaust System Components” in Section 6K2.

Crankshaft position (CKP) sensor (engine speed sensor) inspection

1) Remove CKP sensor referring to “Crankshaft Position (CKP) Sensor (Engine Speed Sensor) Removal and Installation” in this section.
2) Check that CKP sensor (1) and sensor rotor tooth (2) are free from any metal particles and damage.

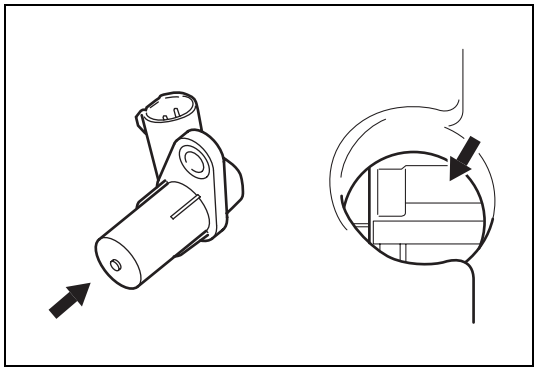

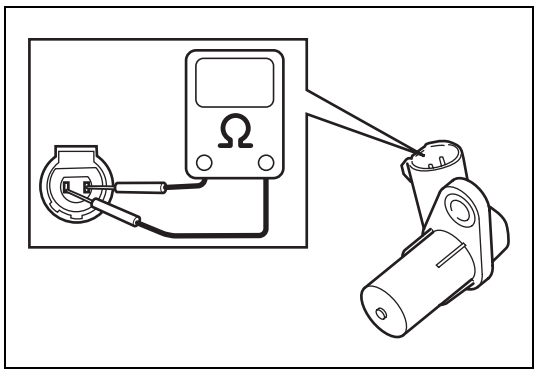

3) Check that resistance between terminals of CKP sensor is within specification.
   If resistance is not as specified, replace CKP sensor.

CKP sensor resistance
608 – 912 Ω at 20°C, 68°F

MAF and IAT sensor removal and installation

Removal

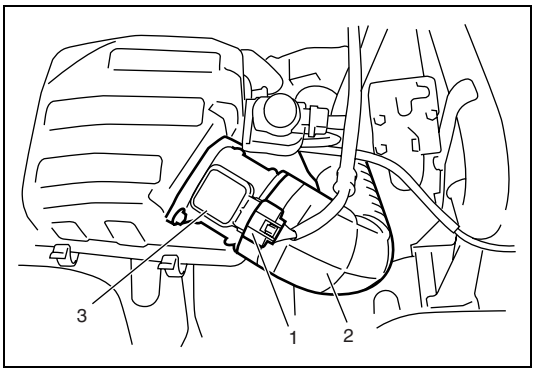

1) Disconnect negative (–) cable at battery.
2) Disconnect MAF and IAT sensor connector (1).
3) Disconnect air cleaner outlet hose (2) from MAF and IAT sensor (3).
4) Remove MAF and IAT sensor (3) from air cleaner case.

Installation

Reverse removal procedure for installation noting the following.

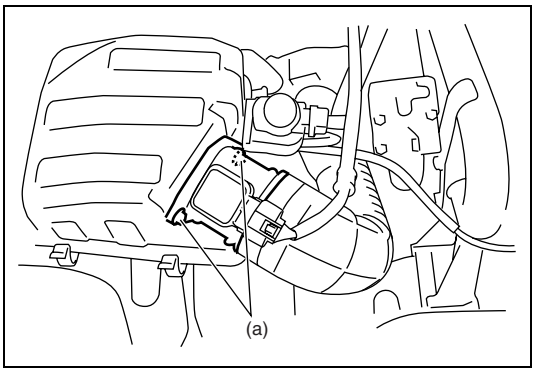

- Clean mating surfaces of MAF and IAT sensor and air cleaner case.
- Tighten MAF and IAT sensor bolts to specified torque.

Tightening torque
MAF and IAT sensor bolt (a): 6 N·m (0.6 kg-m, 4.5 lb-ft)

MAF and IAT sensor inspection

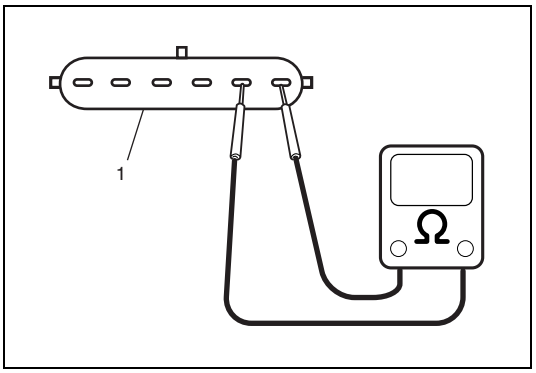

1) Disconnect negative cable at battery.
2) Disconnect connector from MAF and IAT sensor (1).
3) Measure resistance between sensor terminals for IAT.
   If resistance is out of specification, replace MAF and IAT sensor.

IAT sensor resistance
20 °C (68 °F): 2353 – 2544 Ω
40 °C (104 °F): 1114 – 1186 Ω
60 °C (140 °F): 568.9 – 597.4 Ω

Boost pressure sensor removal and installation

Removal

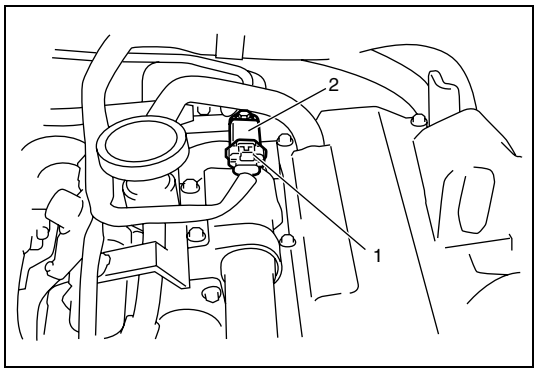

1) Disconnect negative (–) cable at battery.
2) Disconnect boost pressure sensor connector (1).
3) Remove boost pressure sensor (2) from EGR body.

Installation

Reverse removal procedure for installation noting the following

- Tighten boost pressure sensor bolt to specified torque.

Tightening torque
Boost pressure sensor bolt: 8 N·m (0.8 kg-m, 6.0 lb-ft)

Boost pressure sensor inspection

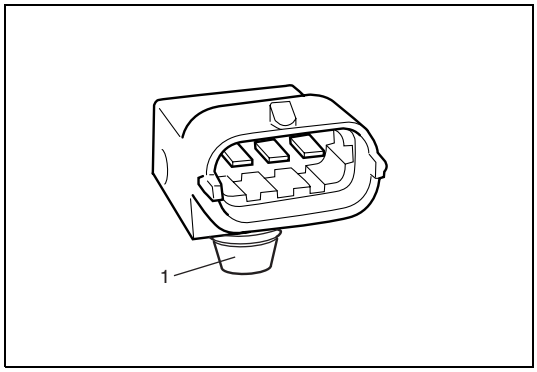

1) Remove boost pressure sensor from turbocharger outlet air pipe referring to “Boost Pressure Sensor Removal and Installation” in this section.
2) Check sensor for damage and sensor port (1) for clogging. If defective condition is found, replace boost pressure sensor.

Boost pressure control solenoid valve removal and installation

Removal

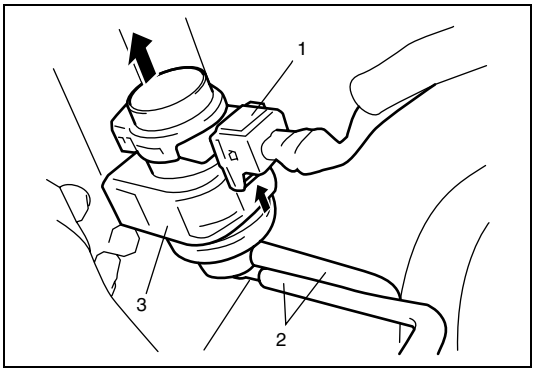

1) Disconnect negative (–) cable at battery.
2) Disconnect boost pressure control solenoid valve connector (1) with unlocked connector lock.
3) Disconnect vacuum hoses (2) from boost pressure control solenoid valve.
4) Remove boost pressure control solenoid valve (3).

Installation

Reverse removal procedure for installation.

Boost pressure control solenoid valve inspection

1) Remove boost pressure control solenoid valve referring to “Boost pressure control solenoid valve removal and installation” in this section.
2) Check for resistance between boost pressure control solenoid valve terminals.
   If resistance is not as specified, replace boost pressure control solenoid valve.

Boost pressure control solenoid valve resistance
18.9-23.1Ω at 23°C (73.4°F)

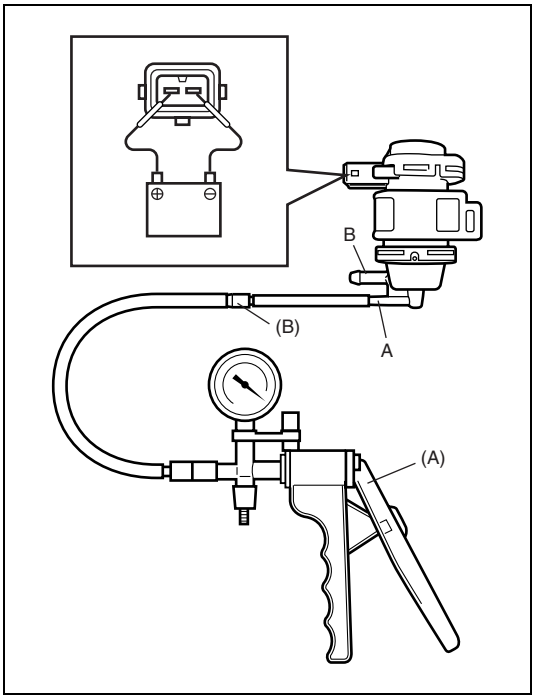

3) Apply vacuum 80 kPa (0.8 kg/cm^2 11.5 psi) to boost pressure control valve using special tool. If vacuum can be applied, go to the next step. If not, replace boost pressure control valve.

Special tool
(A): 09917-47011

4) Connect 12 V battery to boost pressure control valve terminals. In this state, apply vacuum 70 kPa (0.7 kg/cm^2 10.1 psi) to the outlet nozzle using a special tool. If vacuum can not be applied, boost pressure control valve is in good condition. If not, replace boost pressure control valve.

Special tool
(A): 09917-47011
(B): 09918-08210

[A]:	Pipe to vacuum pump
[B]:	Pipe to waste gate actuator

Radiator fan control system inspection

WARNING:

Keep hands, tools, and clothing away from engine cooling fan to help prevent personal injury. This fan is electric and can come on whether or not the engine is running. The fan can start automatically in response to the ECT sensor with the ignition switch in the "ON" position.

Check that radiator cooling fan operates at low and high speed corresponding to the following coolant temperature.
If radiator cooling fan fails to operate properly, check radiator fan relays, radiator cooling fan motor, electrical circuit and ECT sensor.

Radiator cooling fan operating

Low speed	**ON**	**93 °C (199 °F) or higher**
	OFF	**Below 90 °C (194 °F)**
High speed	**ON**	**96 °C (205 °F) or higher**
	OFF	**Below 93 °C (199 °F)**

EGR valve removal and installation

NOTE:

After replacing EGR valve with new one or used one, initialize new EGR valve position referring to "EGR Valve Data Initialization" under "ECM Registration (Programming)" in this section.

For removal and installation procedure of EGR valve, refer to "EGR Valve and Intake Pipe Removal and Installation" in Section 6A2.

EGR valve inspection

1) Remove EGR valve referring to "EGR Valve and Intake Pipe Removal and Installation" in Section 6A2.

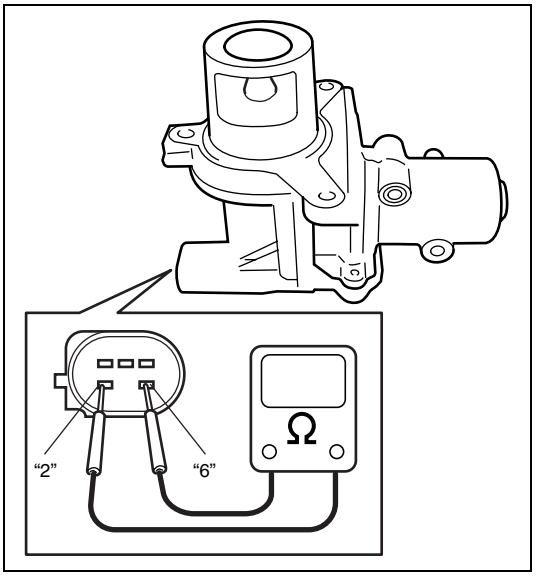

2) Check resistance between terminals ("2" and "6") of EGR valve.
   If resistance is out of specification, replace EGR valve.

EGR valve resistance
Approximately 23 Ω at 25 °C (77 °F)

Tightening Torque Specification

Fastening part	Tightening torque		
	N•m	kg-m	lb-ft
High pressure pipe union nut	38	3.8	27.5
Common rail nut	28	2.8	20.5
Injection cover bracket nut	12	1.2	9.0
Oil level gauge guide nut	21	2.1	15.5
Fuel injector bracket bolt	28	2.8	20.5
Injection pump bolt	27	2.7	19.5
Injection pump pulley nut	Tighten 15 N·m (1.5 kg-m, 11.0 lb-ft) and 60° by the specified procedure		
Venturi bolt	5.5	0.55	4.0
Glow plug	15	1.5	11.0
Accelerator pedal mounting bolt	6	6.0	4.5
Fuel temperature sensor	15	1.5	11.0
Fuel flow actuator bolt	5.5	0.55	4.0
CKP sensor bolt	12	1.2	9.0
MAF and IAT sensor bolt	6	0.6	4.5
Boost pressure sensor bolt	8	0.8	6.0
Knock sensor	20	2.0	14.5

Special Tool

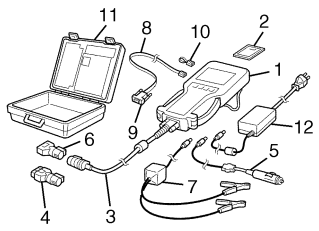	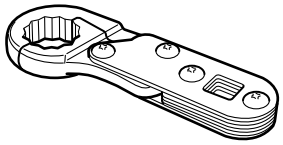	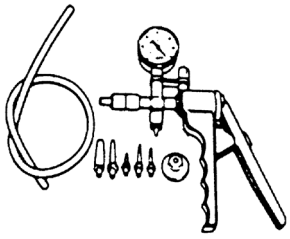	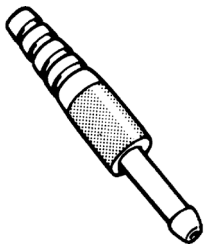
Tech 2 kit (SUZUKI scan tool) (See NOTE)	09911-78110 Crowfoot ratchet ends	09917-47011 Vacuum pump gauge	09918-08210 Vacuum gauge hose guide

NOTE:

This kit includes the following items.

1. Tech 2, 2. PCMCIA card, 3. DLC cable, 4. SAE 16/19 adapter, 5. Cigarette cable, 6. DLC loopback adapter, 7. Battery power cable, 8. RS232 cable, 9. RS232 adapter, 10. RS232 loopback connector, 11. Storage case, 12. Power supply

SECTION 6G2

CRANKING SYSTEM (K9K ENGINE)

WARNING:

For vehicles equipped with a Supplemental Restraint (Air Bag) System:

- **Service on and around the air bag system components or wiring must be performed only by an authorized SUZUKI dealer. Refer to "System Components and Wiring Location View and Connections" under "General Description" in Section 10B in order to confirm whether you are performing service on or near the air bag system components or wiring. Please observe all WARNINGS and "Service Precautions" under "On-Vehicle Service" in Section 10B before performing service on or around the air bag system components or wiring. Failure to follow WARNINGS could result in unintentional activation of the system or could render the system inoperative. Either of these two conditions may result in severe injury.**
- **Technical service work must be started at least 90 seconds after the ignition switch is turned to the "LOCK" position and the negative cable is disconnected from the battery. Otherwise, the system may be activated by reserve energy in the Sensing and Diagnostic Module (SDM).**

NOTE:

For the items with asterisk (*) in the "CONTENTS" below, refer to the same section of the Service Manual mentioned in "FOREWORD" of this manual.

CONTENTS

General Description 6G2-*
Cranking System Circuit Diagram 6G2-*
Diagnosis 6G2-2
Cranking System Symptom Diagnosis 6G2-*
Cranking System Test 6G2-2
Pull-in test 6G2-2
Hold-in test 6G2-2
Plunger and pinion return test 6G2-2
No-load performance test 6G2-3
ON-Vehicle Service 6G2-4
Starting Motor Dismounting and Remounting 6G2-4
Dismounting 6G2-4
Remounting 6G2-*
Tightening Torque Specification 6G2-*

Diagnosis

Cranking System Test

CAUTION:

Each test must be performed within 3 – 5 seconds to avoid coil from burning.

Pull-in test

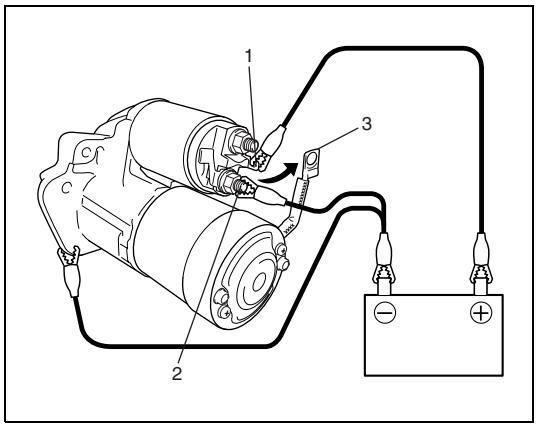

Connect battery to magnetic switch as shown.
Check that plunger and pinion move outward.
If plunger and pinion don't move, replace starting motor.

NOTE:

Before testing, disconnect lead wire (3) from terminal "M" (2).

1. Terminal "S"

Hold-in test

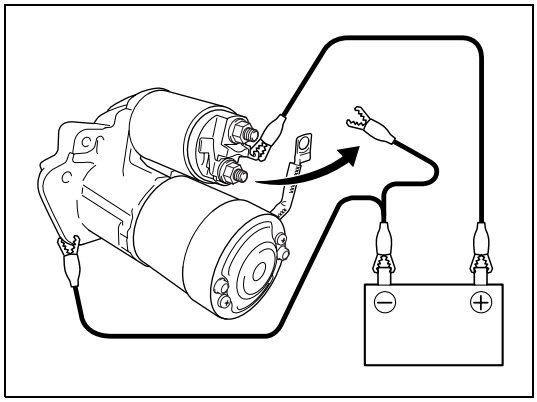

While connected as above with plunger out, disconnect negative lead from terminal "M".
Check that plunger and pinion remain out.
If plunger and pinion return inward, replace starting motor.

Plunger and pinion return test

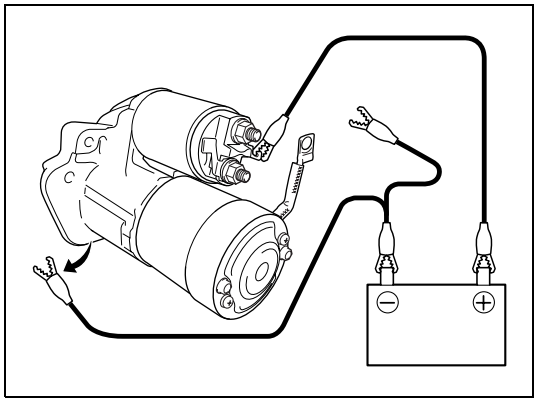

Disconnect negative lead from starting motor body.
Check that plunger and pinion return inward.
If plunger and pinion don't return, replace starting motor.

No-load performance test

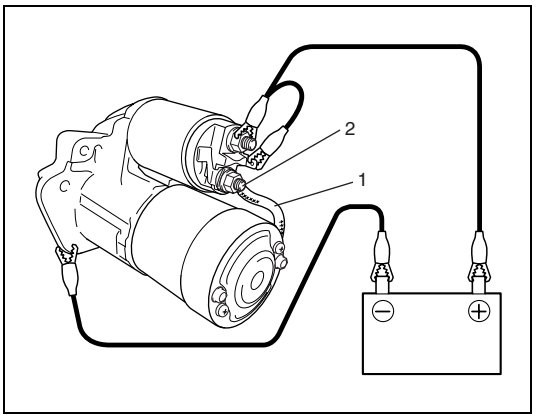

Connect lead wire (1) to terminal “M” (2).
Connect battery to starting motor as shown.
Check that starting motor rotates smoothly and steadily with pinion moving out.
If check result is not satisfactory, replace starting motor.

ON-Vehicle Service

Starting Motor Dismounting and Remounting

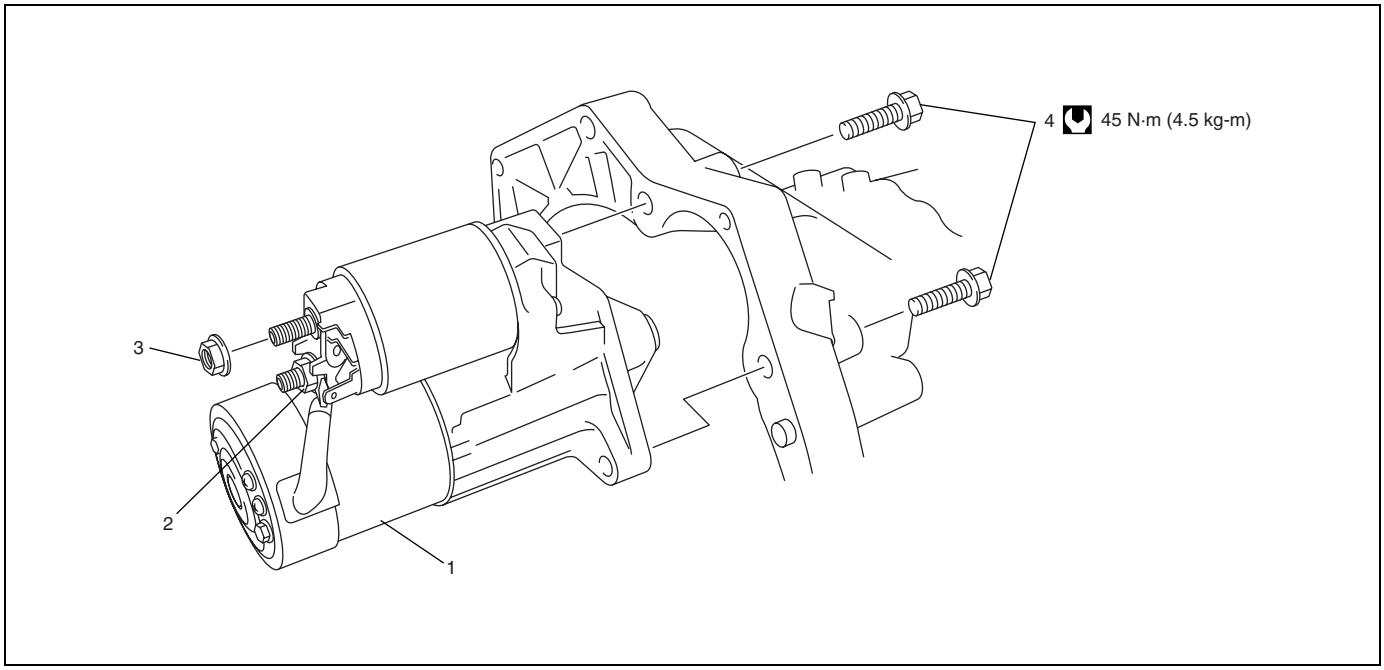

1. Starting motor	3. Battery cable nut	Tightening torque
2. Magnetic switch lead wire nut	4. Starting motor mount bolt	

Dismounting

1) Disconnect negative cable at battery.
2) Remove fuel filter referring to “Fuel Filter Removal and Installation” in Section 6C.
3) Remove oil level gage tube.
4) Disconnect magnetic switch lead wire and battery cable from starting motor terminals.
5) Remove starting motor mount bolt
6) Remove starting motor.

SECTION 6K2

EXHAUST SYSTEM (K9K ENGINE)

NOTE:

For the items with asterisk (*) in the "CONTENTS" below, refer to the same section of the Service Manual mentioned in "FOREWORD" of this manual.

CONTENTS

General Description 6K2-*
Maintenance 6K2-*
On-Vehicle Service..... 6K2-2
Exhaust System Components 6K2-2
Exhaust Manifold Removal and Installation 6K2-*
Exhaust Manifold Inspection 6K2-*
Exhaust Pipe Removal and Installation 6K2-3
Tightening Torque Specification 6K2-4

On-Vehicle Service

Exhaust System Components

WARNING:

To avoid the danger of being burned, do not touch the exhaust system when the system is hot. Any service on the exhaust system should be performed when the system is cool.

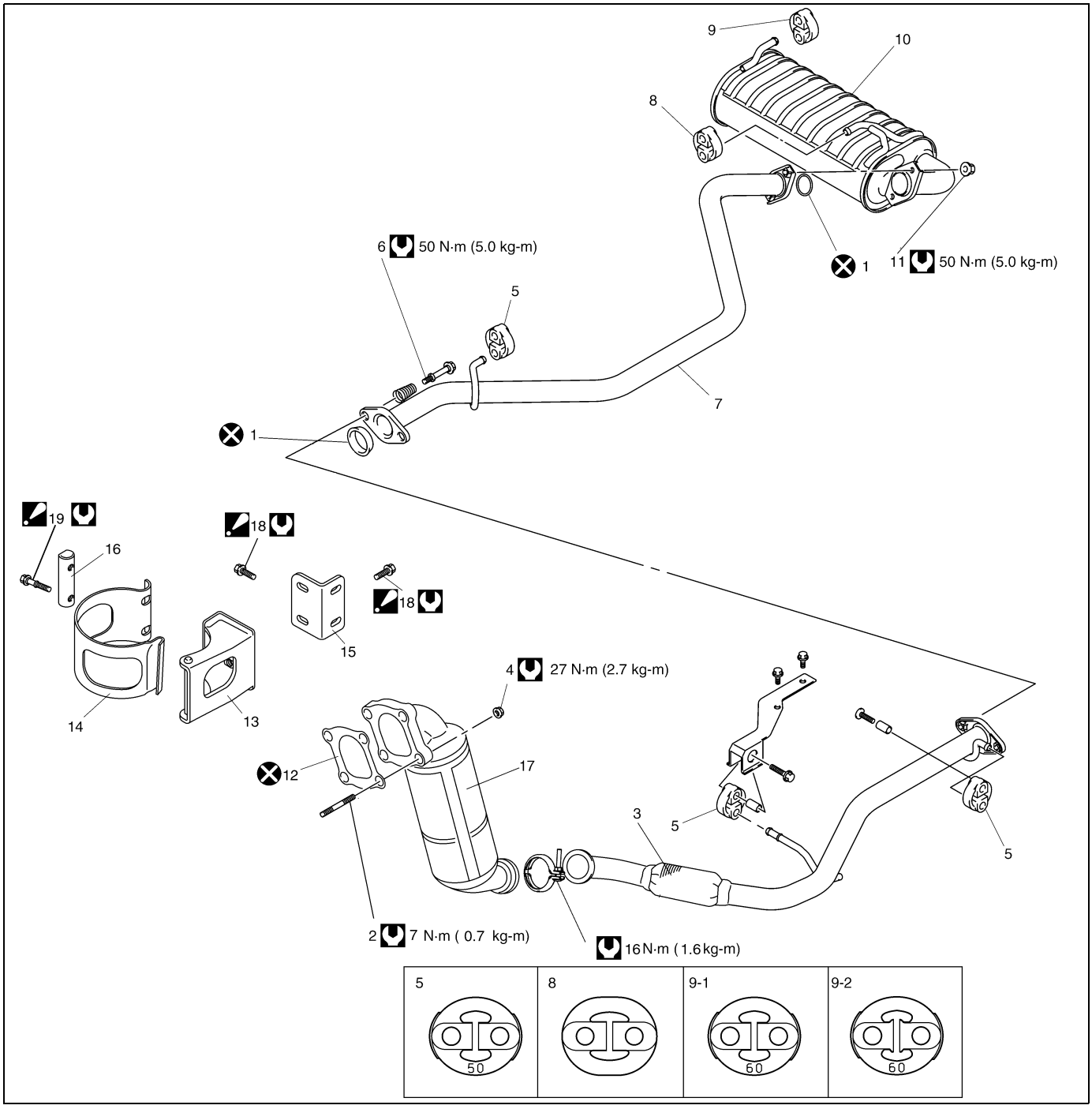

1. Seal ring	7. Center pipe	12. Gasket	18. Catalyst stiffener bolt :Tighten 27N·m (2.7 kg-m, 19.5 lb-ft) by the specified procedure.
2. Exhaust pipe stud bolt	8. Mounting No.2	13. Catalyst stiffener No.1	19. Pressure plate block bolt :Tighten 27N·m (2.7 kg-m, 19.5 lb-ft) by the specified procedure.
3. Exhaust pipe No.2	9-1. Mounting No.3 (Type A)	14. Pressure plate	Tightening torque
4. Exhaust pipe nut	9-2. Mounting No.3 (Tyoe B)	15. Catalyst stiffener No.2	Do not reuse.

5. Mounting No.1	10. Muffler	16. Pressure plate block
6. Center pipe bolt	11. Muffler nut	17. Exhaust pipe No.1

Exhaust Pipe Removal and Installation

WARNING:

To avoid the danger of being burned, do not touch the exhaust system when the system is hot. Any service on the exhaust system should be performed when the system is cool.

CAUTION:

Exhaust pipe No.1 has oxidation catalytic converter in it, it should not be exposed to any impulse.
Be careful not to drop it or hit it against something.

Removal

1) Disconnect negative (–) cable at battery.
2) Remove gear shift control lever referring to “Gear Shift Control Lever Assembly Removal and Installation” in Section 7A2.
3) Remove propeller shaft No.1 and No.2 referring to “Propeller Shafts” in Section 4B.
4) Support transmission with transmission jack.
5) Remove rear mounting bracket (1) and gear shift control arm (2), and then slant transmission downward.

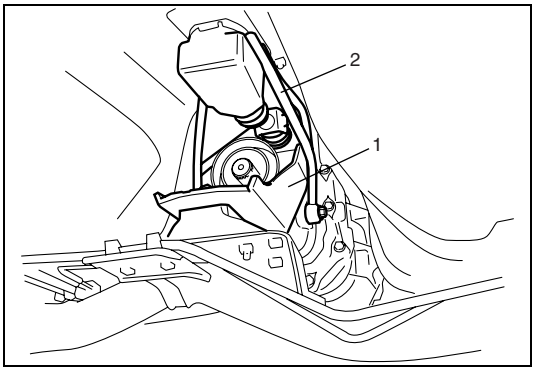

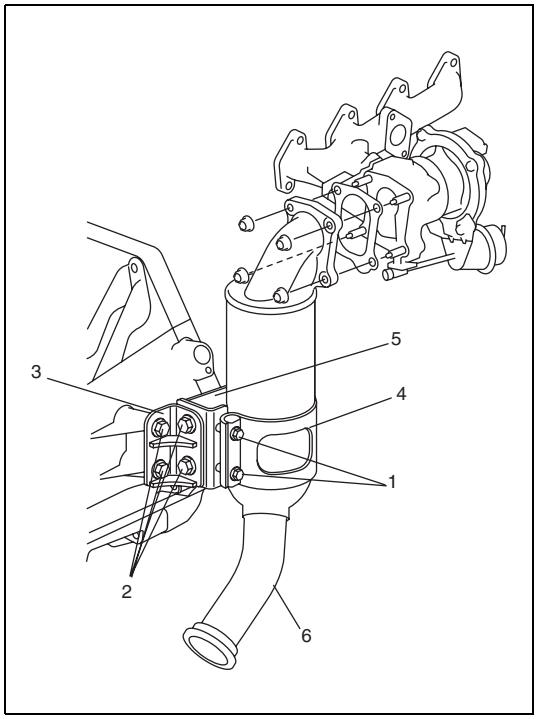

6) Remove pressure plate block bolts (1) and catalyst stiffener bolts (2), and then remove catalyst stiffener No.1 (5), catalyst stiffener No.2 (3) and pressure plate (4).
7) Remove exhaust pipe No.1 (6), No.2, center pipe and muffler referring to “Exhaust System Components” in this section.

Installation

Reverse removal procedure for installation noting the following.

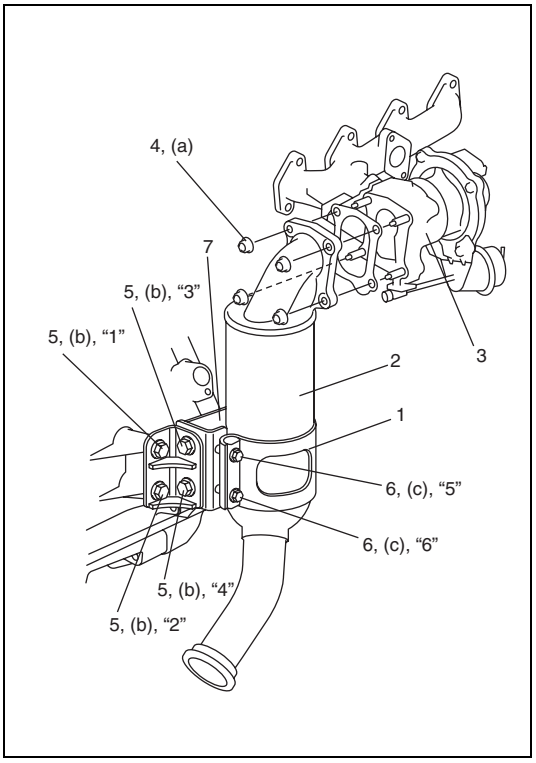

1) Install exhaust pipe No.1 (1) as follows.
   a) Install pressure plate (1) and catalyst stiffener No.1 (7) to exhaust pipe No.1 (2).
   b) Install exhaust pipe No.1 to turbocharger (3), and then tighten exhaust pipe nuts (4) to specified torque.

   Tightening torque
   Exhaust pipe nut (a): 27 N·m (2.7 kg-m, 19.5 lb-ft)

   c) Tighten catalyst stiffener bolts (5) and pressure plate block bolts (6) temporarily.

   Tightening torque
   Catalyst stiffener bolt (b): Tighten 27 N·m (2.7 kg-m, 19.5 lb-ft) by the procedure.
   Pressure plate block bolt (c): Tighten 27 N·m (2.7 kg-m, 19.5 lb-ft) by the specified procedure.

   d) Tighten catalyst stiffener bolts and pressure plate block bolts specified torque by numerical order as shown in figure.

2) Tighten each bolt and nut to specified torque referring to "Exhaust System Components" in this section.
3) After installation, start engine and check each joint of exhaust system for leakage.

Tightening Torque Specification

Fastening part	Tightening torque		
	N•m	kg-m	lb-ft
Exhaust pipe stud bolt	7	0.7	5.0
Exhaust pipe nut	27	2.7	19.5
Center pipe bolt	50	5.0	36.5
Muffler nut	50	5.0	36.5
Catalyst stiffener bolt	"Tighten 27 N·m (2.7 kg-m, 19.5 lb-ft) by the specified procedure."		
Pressure plate block bolt	"Tighten 27 N·m (2.7 kg-m, 19.5 lb-ft) by the specified procedure."		

SECTION 7A2

MANUAL TRANSMISSION (K9K ENGINE MODEL)

WARNING:

For vehicles equipped with a Supplemental Restraint (Air Bag) System:

- **Service on and around the air bag system components or wiring must be performed only by an authorized SUZUKI dealer. Refer to "Air Bag System Components and Wiring Location View" under "General Description" in air bag system section in order to confirm whether you are performing service on or near the air bag system components or wiring. Please observe all WARNINGS and "Service Precautions" under "On-Vehicle Service" in air bag system section before performing service on or around the air bag system components or wiring. Failure to follow WARNINGS could result in unintentional activation of the system or could render the system inoperative. Either of these two conditions may result in severe injury.**
- **Technical service work must be started at least 90 seconds after the ignition switch is turned to the "LOCK" position and the negative cable is disconnected from the battery. Otherwise, the system may be activated by reserve energy in the Sensing and Diagnostic Module (SDM).**

NOTE:

For the items with asterisk (*) in the "CONTENTS" below, refer to the same section of the Service Manual mentioned in "FOREWORD" of this manual.

CONTENTS

General Description ..... 7A2- *
Transmission Components ..... 7A2- *
On-Vehicle Service 7A2-2
Manual Transmission Oil Change ..... 7A2- *
Extension Case Oil Seal Replacement ..... 7A2- *
Gear Shift Control Lever Assembly Components 7A2-2
Gear Shift Control Lever Assembly Removal and Installation 7A2-3
Gear Shift Control Lever Assembly Disassembly and Reassembly ..... 7A2- *
Gear Shift Control Lever Assembly Inspection ..... 7A2- *
Unit Repair Overhaul 7A2-5
Manual Transmission Unit Components 7A2-5
Transmission Unit Dismounting and Remounting ..... 7A2- *
Gear Shift Lever Case Assembly Components ..... 7A2- *
Gear Shift Lever Case Assembly Removal and Installation ..... 7A2- *
Gear Shift Lever Case Assembly Disassembly and Reassembly ..... 7A2- *
Back Up Lamp Switch Removal and Installation ..... 7A2- *
Back Up Lamp Switch Inspection ..... 7A2- *
Manual Transmission Assembly Components 7A2-6
Manual Transmission Assembly Disassembly and Reassembly 7A2-7
Locating Spring Inspection ..... 7A2- *
Gear Shift Shaft and Fork Components ..... 7A2- *
Gear Shift Fork Inspection ..... 7A2- *
Input Shaft, Countershaft and Output Shaft Components ..... 7A2- *
Input Shaft Assembly Disassembly and Reassembly ..... 7A2- *
Input Shaft Assembly Inspection ..... 7A2- *
Countershaft Assembly Disassembly and Reassembly ..... 7A2- *
Countershaft Assembly Inspection ..... 7A2- *
Output Shaft Assembly Disassembly and Reassembly ..... 7A2- *
Output Shaft Assembly Inspection ..... 7A2- *
Tightening Torque Specification 7A2-13
Required Service Material ..... 7A2- *
Special Tool ..... 7A2- *

On-Vehicle Service

Gear Shift Control Lever Assembly Components

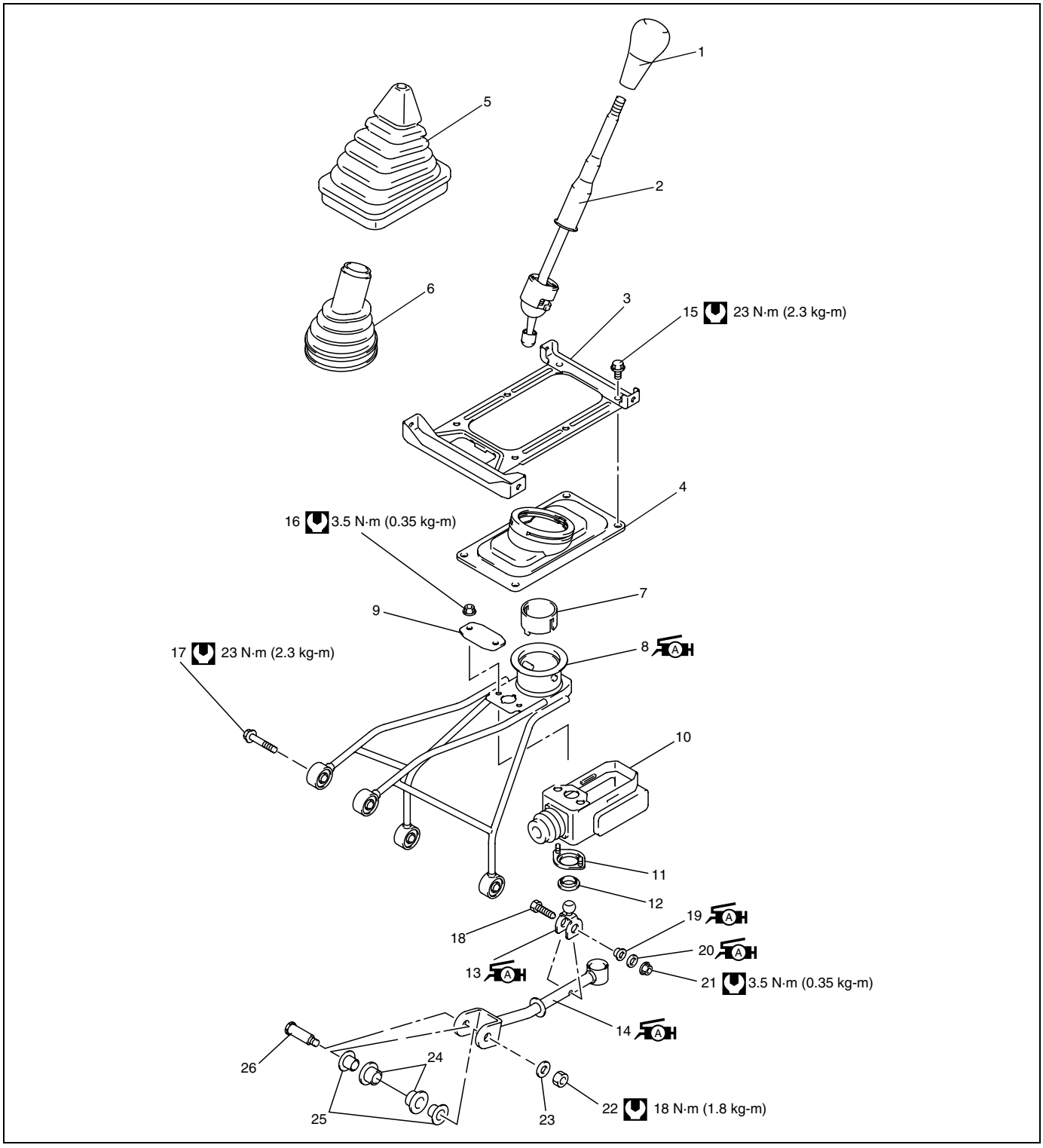

1. Gear shift knob	10. Gear shift lever No.4 boot	19. Gear shift control shaft bush : Apply grease 99000-25010 to bush.
2. Gear shift control lever	11. Gear shift stopper plate	20. Gear shift control joint washer : Apply grease 99000-25010 to washer.
3. Gear shift control boot cover	12. Gear shift control joint bush	21. Gear shift control joint nut
4. Gear shift lever No. 1 boot	13. Gear shift control joint : Apply grease 99000-25010 to connected part.	22. Shift lever No.1 nut
5. Gear shift lever No. 3 boot	14. Gear shift control shaft : Apply grease 99000-25010 to connected part.	23. Shift lever No.1 washer
6. Gear shift lever No. 2 boot	15. Gear shift control boot cover bolt	24. Joint inner bush
7. Gear shift lever case cover	16. Gear shift control boot plate nut	25. Joint outer bush
8. Gear shift control arm : Apply grease 99000-25010 to arm inside.	17. Shift lever No.2 bolt	26. Shift lever No.1 bolt
9. Gear shift control boot plate	18. Gear shift control joint bolt	Tightening torque

Gear Shift Control Lever Assembly Removal and Installation

Removal

1) Remove console box.

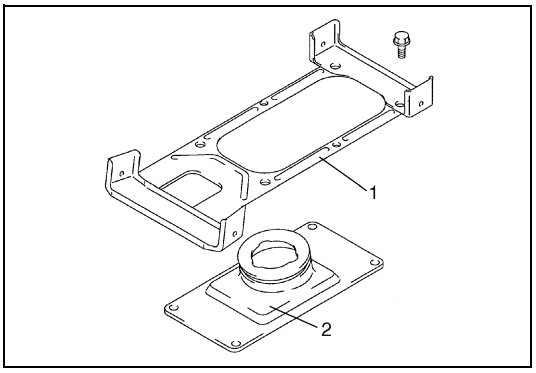

2) Remove gear shift control boot cover (1) from floor panel and gear shift lever No.1 boot (2).

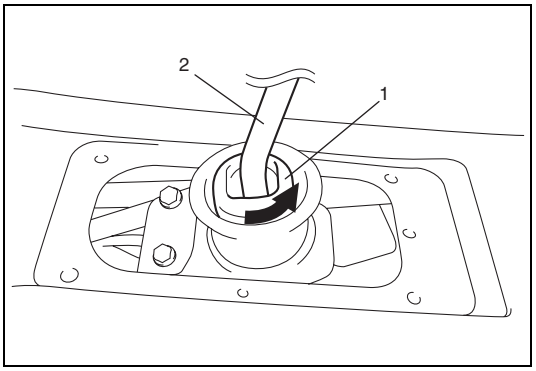

3) Remove gear shift control lever (2) while pushing and turning gear shift lever case cover (1) counterclockwise.
4) Drain transmission oil referring to “Manual Transmission Oil Change” in this section.
5) Remove exhaust pipe referring to “Exhaust Pipe” in Section 6K2.
6) Remove propeller shaft No.1 and No.2 referring to “Propeller Shafts” in Section 4B.

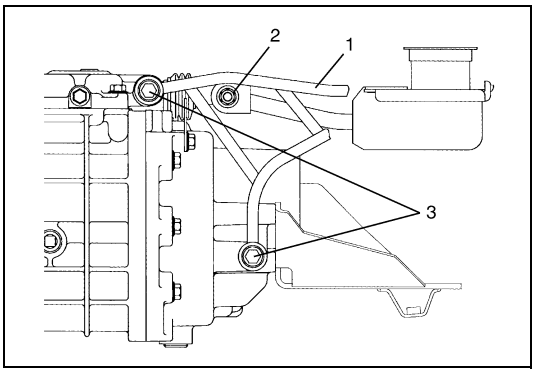

7) Remove gear shift control arm assembly (1).

2. Shift lever No.1 bolt
3. Shift lever No.2 bolts

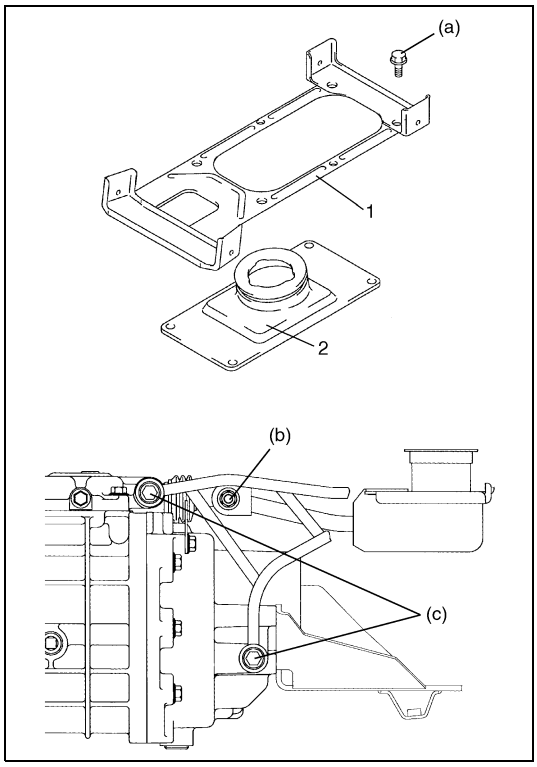

Installation

Reverse removal procedure for installation noting the following.

- Tighten bolts and nut to specified torque as follows.

Tightening torque
Gear shift control boot cover bolt
(a): 23 N·m (2.3 kg-m, 17.0 lb-ft)
Shift lever No.1 nut
(b): 18 N·m (1.8 kg-m, 13.0 lb-ft)
Shift lever No.2 bolt
(c): 23 N·m (2.3 kg-m, 17.0 lb-ft)

Unit Repair Overhaul

Manual Transmission Unit Components

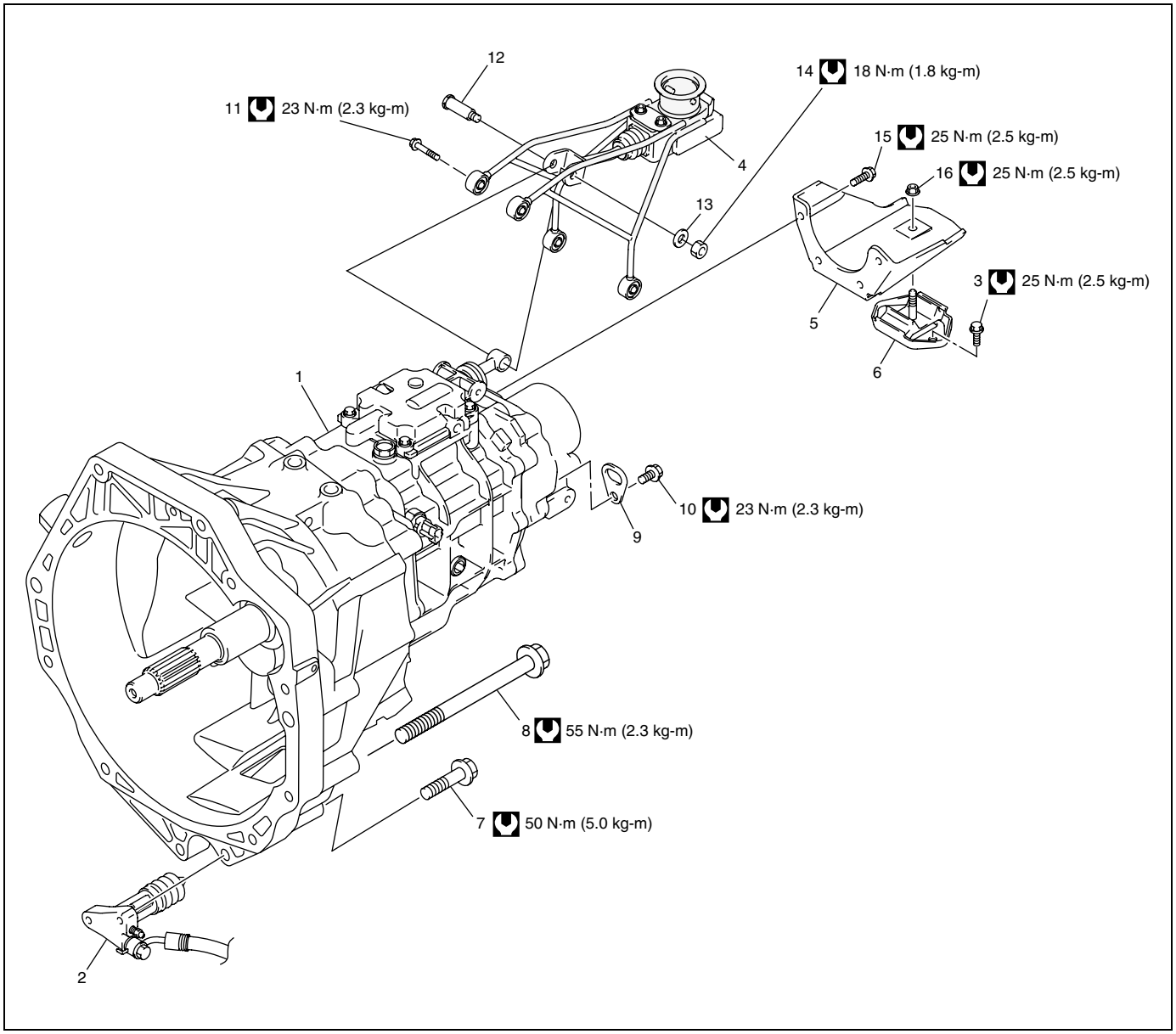

1. Transmission	7. Clutch operating cylinder bolt	13. Shift lever No.1 washer
2. Clutch operating cylinder	8. Transmission case bolt	14. Shift lever No.1 nut
3. Rear mounting bolt	9. Transmission hook	15. Rear mounting bracket bolt
4. Gear shift control lever assembly	10. Transmission hook bolt	16. Rear mounting bracket nut
5. Rear mounting bracket	11. Shift lever No.2 bolt	Tightening torque
6. Rear mounting	12. Shift lever No.1 bolt	

Manual Transmission Assembly Components

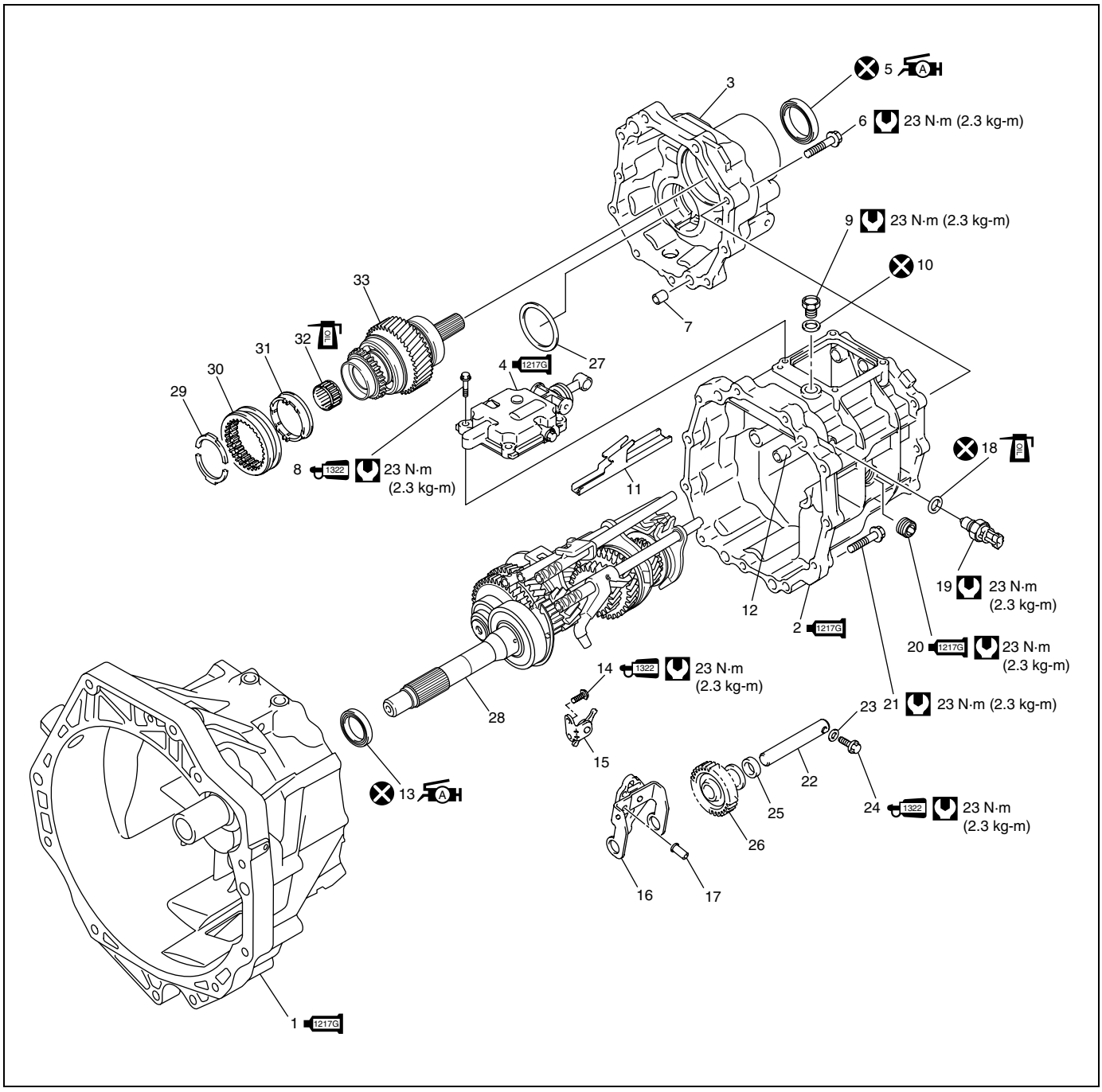

1. Transmission front case : Apply sealant 99000-31260 to mating surface of front case and rear case.	13. Input shaft oil seal : Apply grease 99000-25010 to oil seal lip.	25. Reverse gear shaft washer
2. Transmission rear case : Apply sealant 99000-31260 to mating surface of rear case and extension case.	14. 5th gear shift inverse lever bolt : Apply thread lock 99000-32110 to all around thread part of bolt.	26. Reverse idler gear
3. Extension case	15. Low gear shift inverse lever	27. Countershaft shim
4. Gear shift lever case assembly : Apply sealant 99000-31260 to mating surface of rear case and gear shift lever case assembly.	16. Reverse gear shift lever	28. Input shaft & countershaft assembly
5. Extension oil seal : Apply grease 99000-25010 to oil seal lip.	17. Reverse shift locating	29. 5th speed synchronizer lever
6. Extension case bolt	18. O-ring	30. 5th speed synchronizer sleeve
7. Knock pin	19. Back up lamp switch	31. 5th speed synchronizer ring
8. Gear shift lever case bolt : Apply thread lock 99000-32110 to all around thread part of bolt.	20. Oil filler plug : Apply sealant 99000-31260 to all around thread part of bolt.	32. Input shaft needle bearing
9. Oil hole plug	21. Transmission case bolt	33. Output shaft assembly
10. Oil hole gasket	22. Reverse gear shaft	Tightening torque
11. Oil gutter	23. Reverse shaft bolt washer	Do not reuse.
12. Knock pin	24. Reverse shaft bolt : Apply thread lock 99000-32110 to all around thread part of bolt.	Apply transmission oil.

Manual Transmission Assembly Disassembly and Reassembly

Disassembly

1) Remove clutch release bearing and release fork referring to “Clutch Cover, Clutch Disc, Flywheel and Release Bearing Removal and Installation” in Section 7C2.
2) Remove gear shift lever case assembly referring to “Gear Shift Lever Case Assembly Removal and Installation” in this section.
3) Remove extension case.
4) Remove output shaft assembly.
5) Remove reverse shaft bolt (1) and back up lamp switch (2).

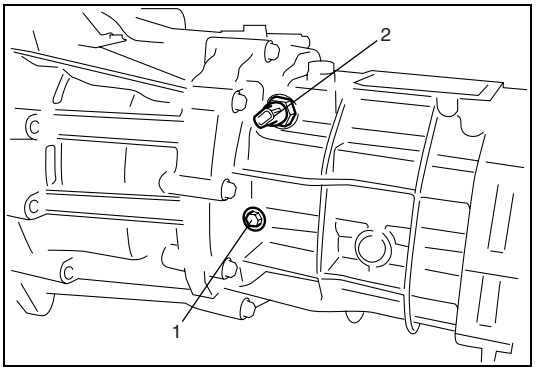

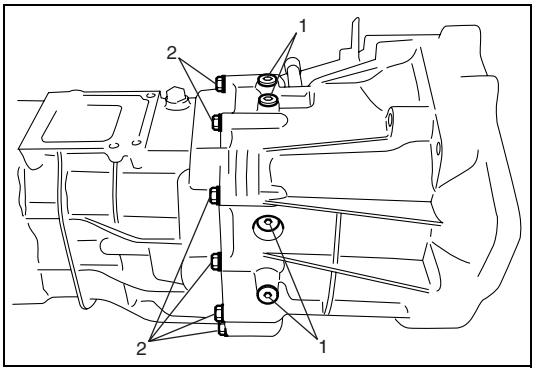

6) Remove gear shift locating bolts (1), then take out locating springs and gear shift shaft balls.
7) Remove rear to front case bolts (2), then separate rear case from front case tapping front case flange with plastic hammer.
8) Remove oil gutter.

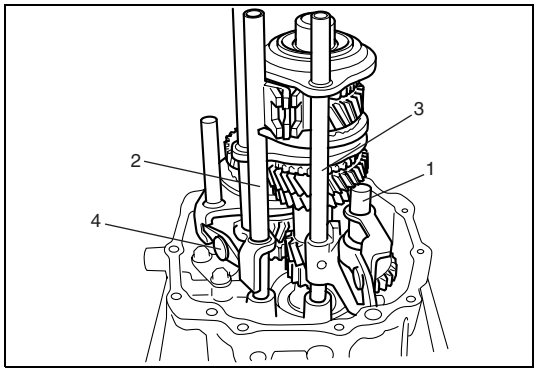

9) Remove reverse shaft assembly (1).
10) Remove 5th gear shift inverse lever (4).
11) Remove low speed gear shift shaft (2) and 5th & reverse gear shift fork (3).
12) Remove input shaft needle bearing, 5th speed synchronizer ring, 5th speed synchronizer levers and 5th speed synchronizer sleeve.

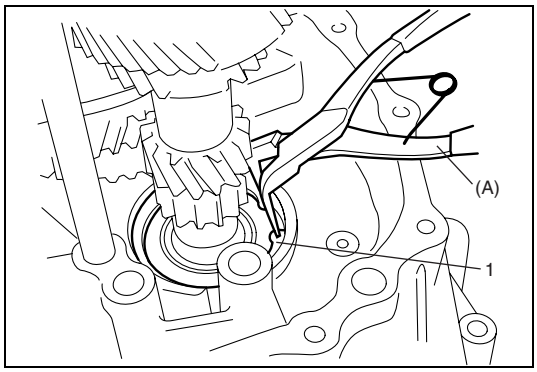

13) Remove input shaft front bearing circlip (1) from case using special tool.

Special tool
(A): 09900-06106

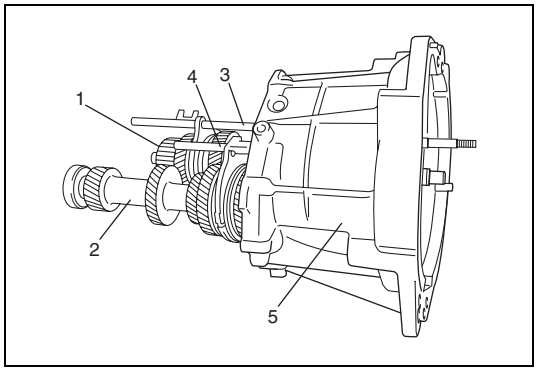

14) Remove input shaft assembly (1), countershaft assembly (2), high speed gear shift fork (3) and low speed gear shift fork (4) as assembly from front case (5) tapping input shaft end by plastic hammer lightly.

Reassembly

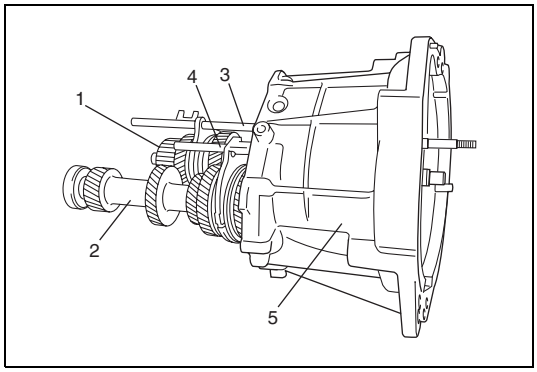

1) Assemble input shaft assembly (1), countershaft assembly (2), high speed gear shift fork (3) and low speed gear shift fork (4), then install them all together into front case (5).

CAUTION:
Take care not to damage oil seal lip by input shaft, or oil leakage may take place.

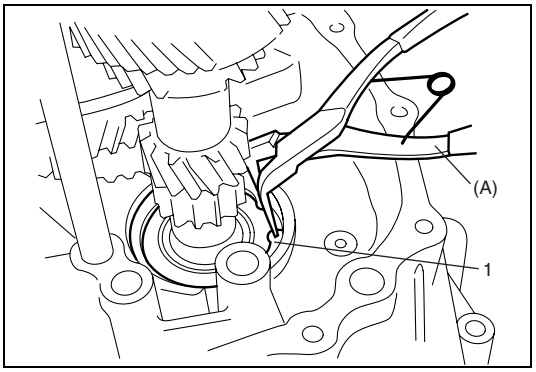

2) Install input shaft front bearing circlip (1) using special tool.

Special tool
(A): 09900-06106

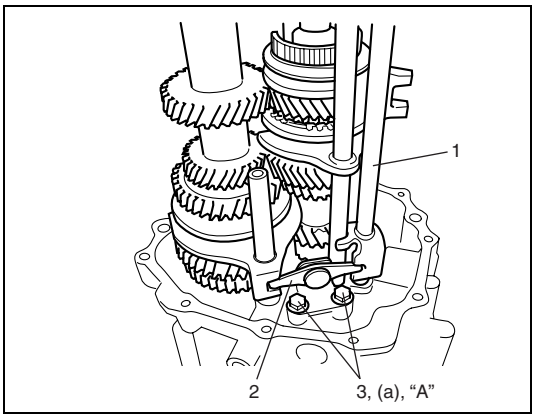

3) Install low speed gear shift shaft (1) and 5th gear shift inverse lever (2) and tighten with bolt (3) to which thread lock cement has been applied.

"A": Thread lock cement 99000-32110

Tightening torque
5th gear shift inverse lever bolt
(a): 23 N·m (2.3 kg-m, 17.0 lb-ft)

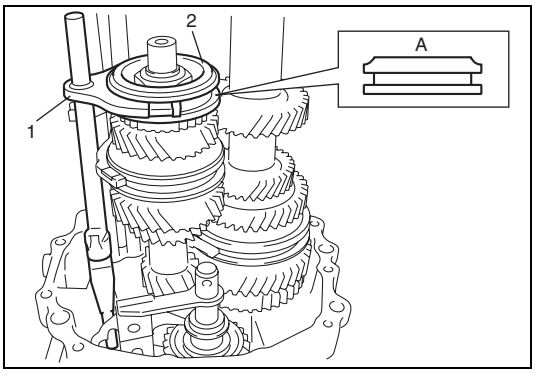

4) Fit 5th & reverse gear shift fork (1) to 5th speed synchronizer sleeve (2), and install them into input shaft and front case in specified direction as shown in figure.

A: Chamfered side

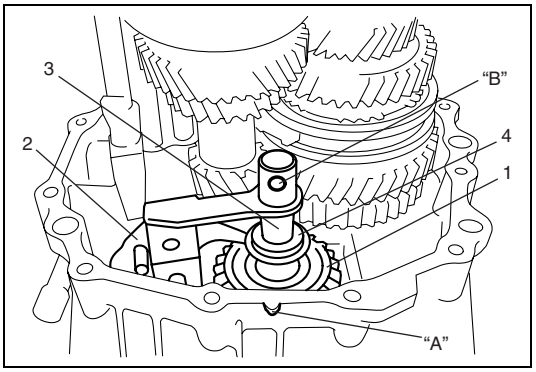

5) Set reverse idler gear (1), reverse gear shift lever (2) and reverse gear shaft washer (4), insert reverse gear shaft (3) into case through idler gear and then align hole "B" in shaft with protrusion "A" in case.
6) Install oil gutter

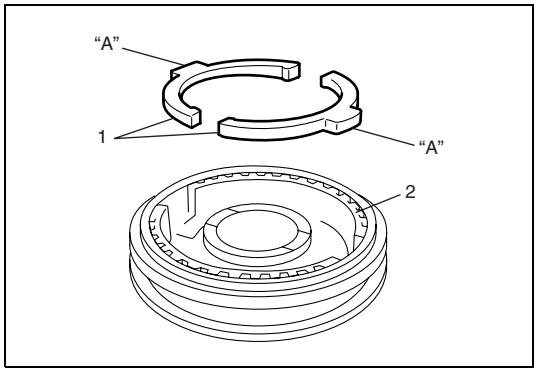

7) Install 5th speed synchronizer levers and 5th speed synchronizer ring as follows.
   a) Fit 5th speed synchronizer levers (1) to hub (2) aligning protrusion "A" of 5th speed synchronizer levers with groove of hub.

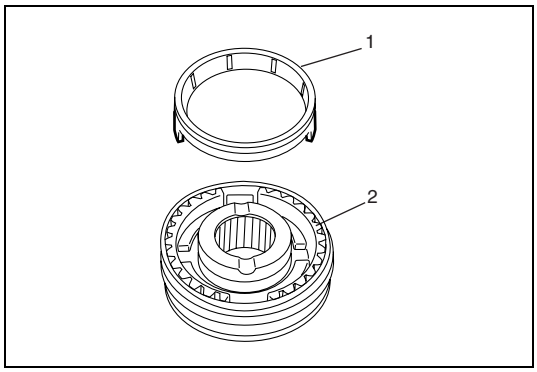

   b) Install synchronizer ring (1) to hub (2) in specified direction as shown in figure.

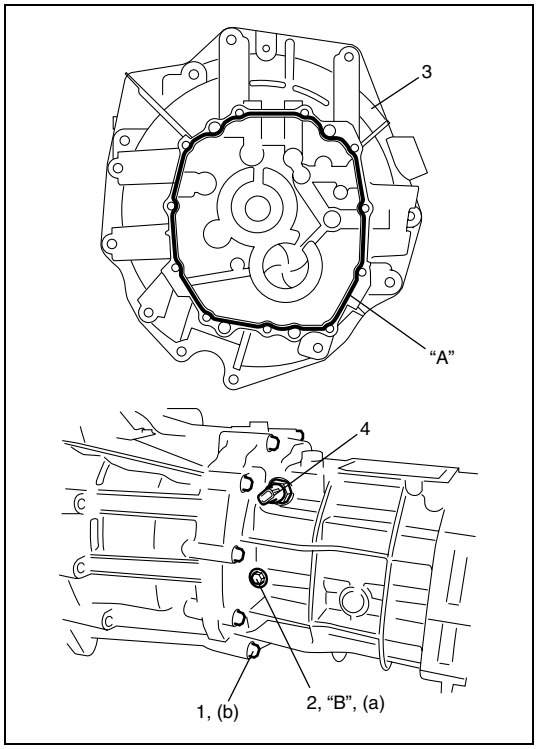

8) Clean mating surfaces of both front and rear cases, and uniformly apply sealant to front case (3) as shown in figure.

   "A": Sealant 99000-31260

9) Tighten case bolts (1) to specified torque.

   Tightening torque
   Transmission case bolt (b): 23 N·m (2.3 kg-m, 17.0 lb-ft)

10) Apply thread lock cement to reverse shaft bolt (2), and tighten it.

   "B": Thread lock cement 99000-32110

   Tightening torque
   Reverse shaft bolt (a): 23 N·m (2.3 kg-m, 17.0 lb-ft)

11) Install back up lamp switch (4) referring to "Back Up Lamp Switch Removal and Installation" in this section.

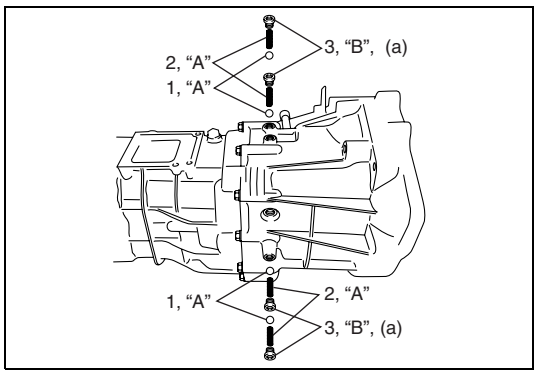

12) Apply grease to gear shift shaft balls (1) and locating springs (2), then install them.
   Apply thread lock cement to gear shift locating bolts (3), and then tighten them.

   "A": Grease 99000-25010

   "B": Thread lock cement 99000-32110

   Tightening torque
   Gear shift locating bolt (a): 23 N·m (2.3 kg-m, 17.0 lb-ft)

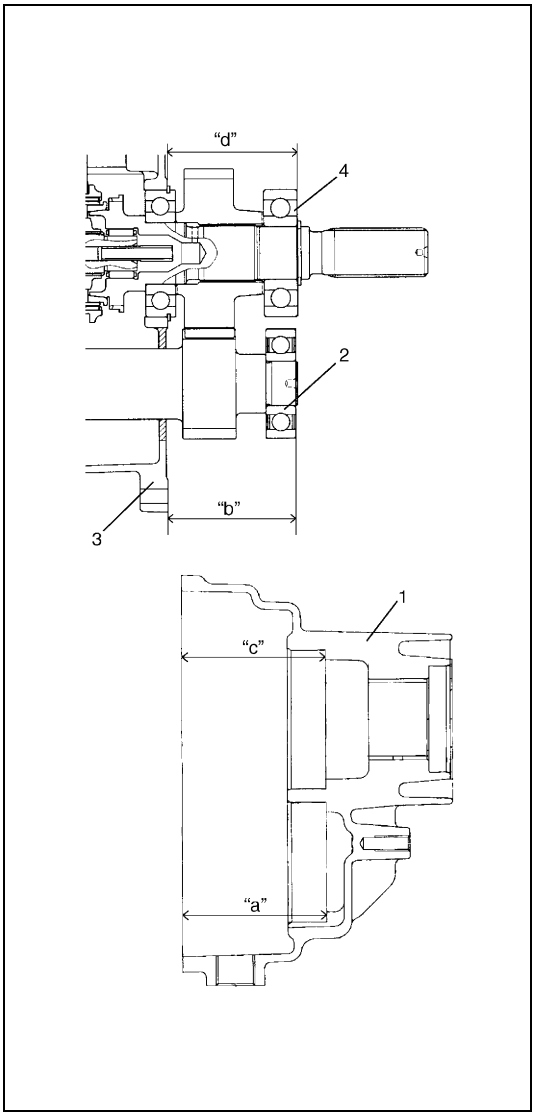

13) Install output shaft into rear case.

14) Select a countershaft shim and output shaft shim as follows.
   a) Measure depth "a" from mating surface of extension case (1) to face processed for installation of countershaft rear bearing (2) and measure depth "c" from mating surface of extension case to face processed for installation of output shaft rear bearing (4) using vernier caliper
   b) Measure height "b" from mating surface of rear case (3) to countershaft rear bearing (2) and measure height "d" from mating surface of rear case (3) to output shaft rear bearing (4) using vernier caliper.
   c) Calculate "a" – "b" and "c" – "d", and select a shim according to the following table.

Countershaft shim selection table

Clearance "a" – "b"	Thickness of countershaft shim
1.15 – 1.24 mm (0.045 – 0.048 in.)	0.90 mm (0.035 in.)
1.25 – 1.34 mm (0.049 – 0.052 in.)	1.00 mm (0.039 in.)
1.35 – 1.44 mm (0.053 – 0.056 in.)	1.10 mm (0.043 in.)
1.45 – 1.54 mm (0.057 – 0.060 in.)	1.20 mm (0.047 in.)
1.55 – 1.64 mm (0.061 – 0.064 in.)	1.30 mm (0.051 in.)
1.65 – 1.74 mm (0.065 – 0.068 in.)	1.40 mm (0.055 in.)
1.75 – 1.84 mm (0.069 – 0.072 in.)	1.50 mm (0.059 in.)
1.85 – 1.94 mm (0.073 – 0.076 in.)	1.60 mm (0.063 in.)
1.95 – 2.04 mm (0.077 – 0.080 in.)	1.70 mm (0.067 in.)
2.05 – 2.14 mm (0.081 – 0.084 in.)	1.80 mm (0.071 in.)
2.15 – 2.24 mm (0.085 – 0.088 in.)	1.90 (0.90 + 1.00) mm (0.075 (0.035 + 0.039) in.)

Output shaft shim selection table

Clearance "c" – "d"	Thickness of counter-shaft shim
0 – 0.09 mm (0 – 0.004 in.)	–
0.10 – 0.19 mm (0.004 – 0.007 in.)	0.10 mm (0.004 in.)
0.20 – 0.29 mm (0.008 – 0.011 in.)	0.20 mm (0.008 in.)
0.30 – 0.39 mm (0.012 – 0.015 in.)	0.30 mm (0.012 in.)
0.40 – 0.49 mm (0.016 – 0.019 in.)	0.40 mm (0.016 in.)
0.50 – 0.59 mm (0.020 – 0.023 in.)	0.50 (0.20 + 0.30) mm (0.020 (0.008 + 0.012) in.)
0.60 – 0.69 mm (0.024 – 0.027 in.)	0.60 (0.20 + 0.40) mm (0.024 (0.008 + 0.016) in.)
0.70 – 0.79 mm (0.028 – 0.031 in.)	0.70 (0.30 + 0.40) mm (0.028 (0.012 + 0.016) in.)

15) Install selected countershaft shim and output shaft shim to extension case.

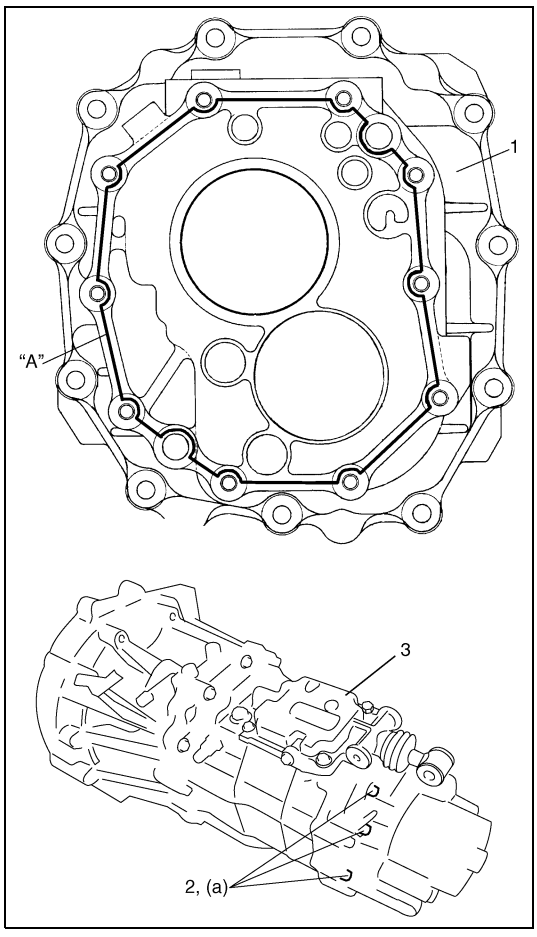

16) Clean mating surface of both rear case (1) and extension case, and uniformly apply sealant to rear case as shown in figure.

"A": Sealant 99000-31260

17) Tighten case bolts (2) to specified torque.

Tightening torque
Extension case bolt (a): 23 N·m (2.3 kg-m, 17.0 lb-ft)

18) Install gear shift lever case assembly (3) referring to "Gear Shift Lever Case Assembly Removal and Installation" in this section.
19) Install clutch release bearing and release fork referring to "Clutch Cover, Clutch Disc, Flywheel and Release Bearing Removal and Installation" in Section 7C2.

Tightening Torque Specification

Fastening part	Tightening torque		
	N•m	kg-m	lb-ft
Transmission oil level / filler and drain plugs	23	2.3	17.0
Gear shift control boot cover bolt	23	2.3	17.0
Shift lever No.1 nut	18	1.8	13.0
Shift lever No.2 bolt	23	2.3	17.0
Back up lamp switch	23	2.3	17.0
Reverse shaft bolt	23	2.3	17.0
Gear shift locating bolt	23	2.3	17.0
Extension case bolt	23	2.3	17.0
Gear shift lever case bolt	23	2.3	17.0
5th gear shift inverse lever bolt	23	2.3	17.0
Input shaft 5th hub nut	210	21.0	152.0
Countershaft front bearing nut	210	21.0	152.0
Transmission to engine bolt	55	5.5	39.5
Gear shift control joint nut	3.5	0.35	2.5
Gear shift control boot plate nut	3.5	0.35	2.5
Gear shift stop bolt	23	2.3	17.0
Oil hole plug	23	2.3	17.0
Clutch operating cylinder bolt	50	5.0	36.0
Transmission hook bolt	23	2.3	17.0
CKP sensor bolt	8.5	0.85	6.0
Rear mounting bracket bolt	25	2.5	18.0
Rear mounting bracket nut	25	2.5	18.0
Rear mounting bolt	25	2.5	18.0
Transmission case bolt	23	2.3	17.0

SECTION 7C2

CLUTCH (K9K ENGINE MODEL)

NOTE:

For the items with asterisk (*) in the "CONTENTS" below, refer to the same section of the Service Manual mentioned in "FOREWORD" of this manual.

CONTENTS

General Description 7C2-2
Diagnosis ..... 7C2- *
- Diagnosis Table ..... 7C2- *
- Clutch Pedal Inspection ..... 7C2- *
- Clutch Fluid Level Check ..... 7C2- *

On-Vehicle Service 7C2-3
- Clutch Fluid Pipe and Hose Components .. 7C2-3
- Clutch Fluid Pipe and Hose Removal and Installation 7C2-4
- Clutch Fluid Pipe and Hose Inspection 7C2-5
- Clutch Master Cylinder Removal and Installation ..... 7C2- *
- Clutch Operating Cylinder Removal and Installation 7C2-6

Unit Repair Overhaul 7C2-7
- Clutch Master Cylinder Components..... 7C2- *
- Clutch Master Cylinder Disassembly and Assembly..... 7C2- *
- Clutch Master Cylinder Inspection ..... 7C2- *
- Clutch Operating Cylinder Components ... 7C2- *
- Clutch Operating Cylinder Disassembly and Assembly ..... 7C2- *
- Clutch Operating Cylinder Inspection ..... 7C2- *
- Clutch Pedal and Clutch Pedal Bracket Components..... 7C2- *
- Clutch Cover, Clutch Disc, Flywheel and Release Bearing Components 7C2-7
- Clutch Cover, Clutch Disc, Flywheel and Release Bearing Removal and Installation..... 7C2-8
- Clutch Cover, Clutch Disc, Flywheel and Release Bearing Inspection ..... 7C2- *

Tightening Torque Specification 7C2-10
Required Service Material ..... 7C2- *
Special Tool ..... 7C2- *

General Description

The clutch is a diaphragm-spring clutch of a dry single disc type. The diaphragm spring is of a tapering finger type, which is a solid ring in the outer diameter part, with a series of tapering fingers pointing inward. The disc, carrying four torsional coil springs, is slidably mounted on the transmission input shaft with a serration fit.

The clutch cover is secured to the flywheel, and carries the diaphragm spring in such a way that the peripheral edge of the spring pushes on the pressure plate against the flywheel with the disc in between, when the clutch release bearing is held back: This is the engaged condition of the clutch.

Depressing the clutch pedal causes the release bearing to advance and push on the tips of the tapering fingers of the diaphragm spring. When this happens, the diaphragm spring pulls the pressure plate away from the flywheel, thereby interrupting the flow of drive from flywheel through clutch disc to transmission input shaft.

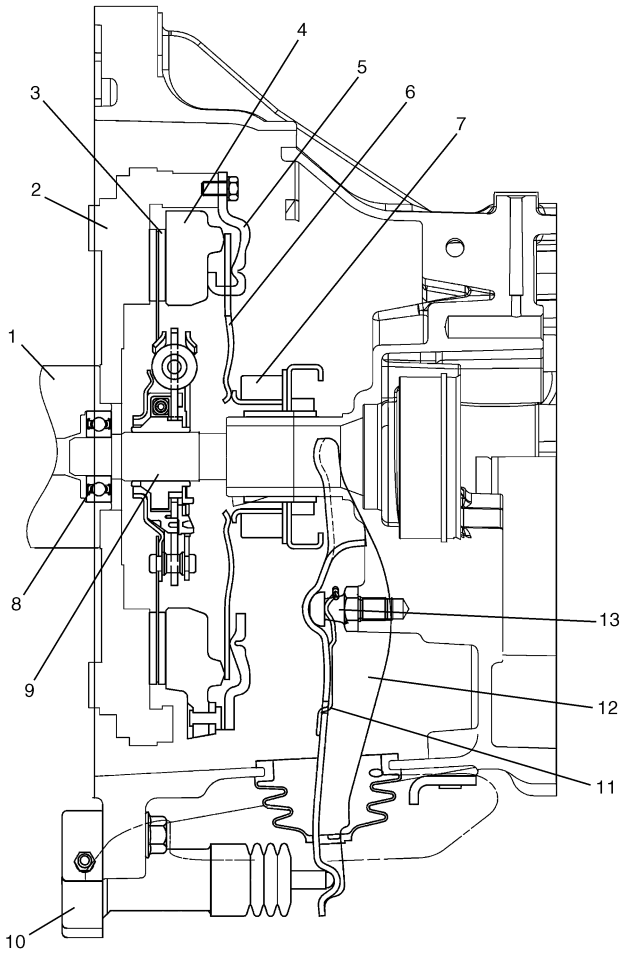

1. Crankshaft	6. Diaphragm spring	11. Clutch release fork clip
2. Flywheel	7. Release bearing	12. Release fork
3. Clutch disc	8. Input shaft bearing	13. Clutch release fork support
4. Pressure plate	9. Input shaft	
5. Clutch cover	10. Clutch operating cylinder	

On-Vehicle Service

CAUTION:

- **Do not allow fluid to get on painted surface.**
- **Do not use shock absorber fluid or any other fluid which contains mineral oil. Do not use a container which has been used for mineral oil or a container which is wet from water. Mineral oil will cause swelling and distortion of rubber parts in hydraulic brake system and water mixed into brake fluid will lower fluid boiling point. Keep all fluid containers capped to prevent contamination.**

Clutch Fluid Pipe and Hose Components

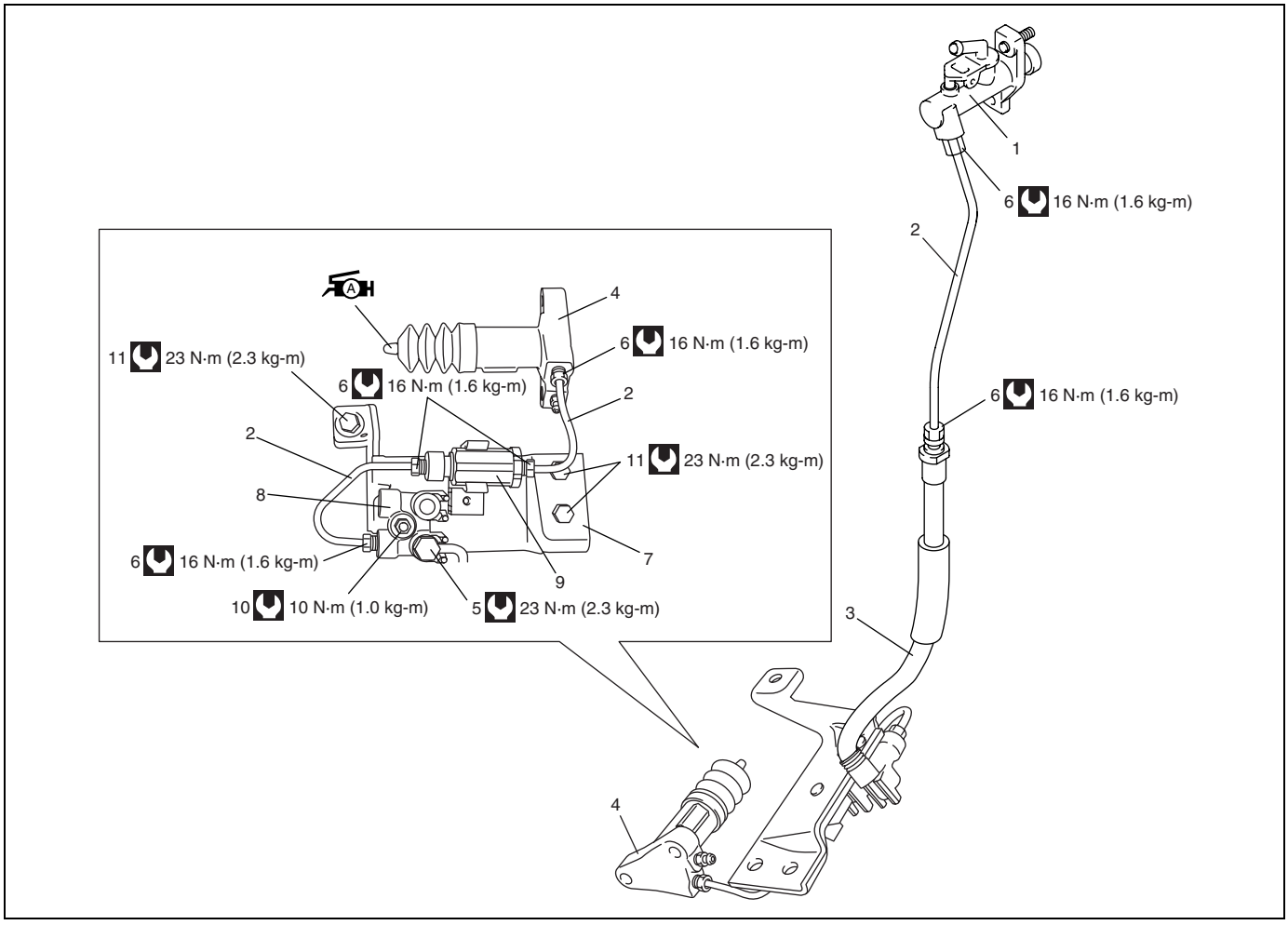

	1. Clutch master cylinder	5. Union bolt	9. Clutch fluid throttle valve
	2. Pipe	6. Clutch pipe flare nut	10. Clutch pipe joint nut
	3. Hose	7. Clutch pipe joint bracket	11. Clutch pipe joint bracket bolt
A	4. Clutch operating cylinder : Apply grease 99000-25010 to rod tip.	8. Clutch pipe joint	Tightening torque

Clutch Fluid Pipe and Hose Removal and Installation

Removal

1) Remove dust and dirt from each joint of hose and pipe to be disconnected and clean around reservoir cap.
2) Take out fluid with syringe or such from brake master cylinder reservoir.

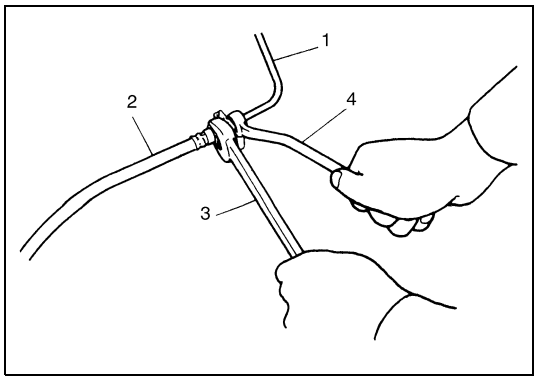

3) Disconnect each fluid pipe and hose referring to “Clutch Fluid Pipe and Hose Components” in this section.

NOTE:

To disconnect pipe (1) from hose (2), separate them by using flare nut wrench (4) and spanner (3) so as not to kink them.

Installation

Reverse removal procedure for installation, noting the following instruction.

CAUTION:

Do not allow pipe and hose to contact hard against vehicle body or other parts.

- Install each clamp securely.
- For installation angle of hose, refer to “Clutch Fluid Pipe and Hose Components” in this section.

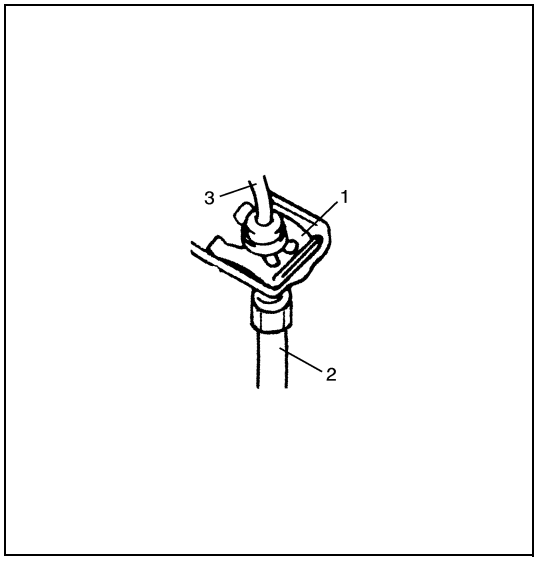

- Install E-ring (1) securely as shown.
- Tighten each bolt and nut to specified torque referring to “Clutch Fluid Pipe and Hose Components” in this section.

NOTE:

To connect pipe to hose, connect them by using flare nut wrench and spanner so as not to kink them.

- After installation, bleed air from system. (Refer to “Air Bleeding of Brake System” in Section 5.)
- Check fluid leakage.
- Add fluid to MAX level of reservoir.

2. Hose
3. Pipe

Clutch Fluid Pipe and Hose Inspection

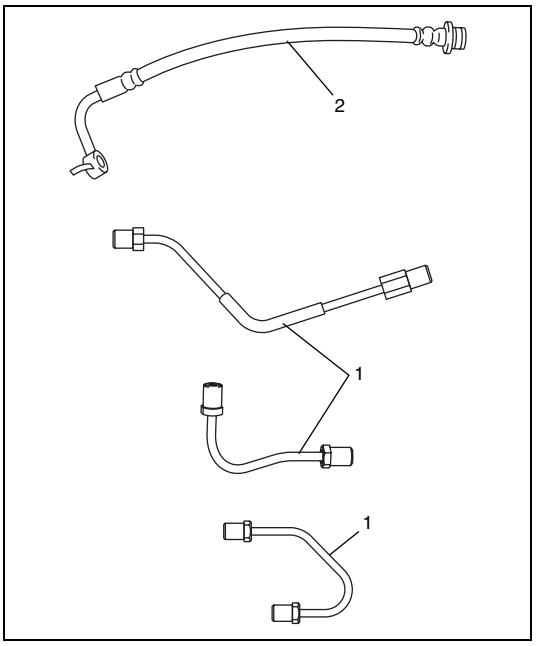

Check pipe (1) and hose (2) for dent, kink, crack, dirt and dust. Replace if check result is not satisfactory.

Clutch Operating Cylinder Removal and Installation

Removal

1) Clean around master cylinder reservoir cap and take out fluid with syringe or such from brake master cylinder reservoir.

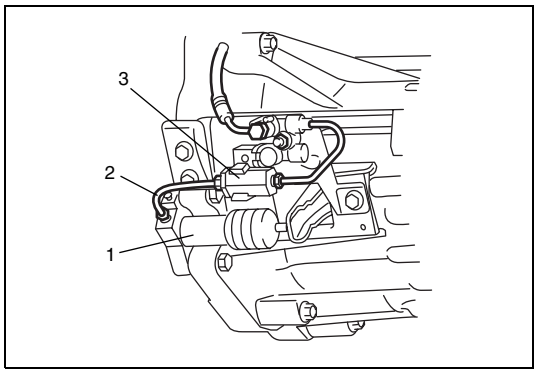

2) Remove pipe (2) from operating cylinder assembly (1) and clutch fluid throttle valve (3).
3) Remove clutch operating cylinder assembly (1).

Installation

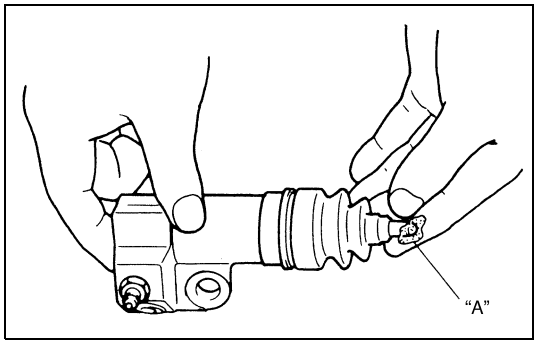

1) Apply small amount of grease to rod tip.

NOTE:

Do not allow any grease to be on boot.

"A": Grease 99000-25010

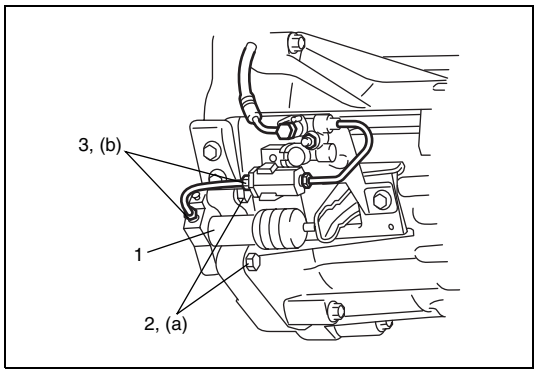

2) Install clutch operating cylinder assembly (1) and tighten clutch operating cylinder bolts (2) to specified torque.

Tightening torque
Clutch operating cylinder bolt
(a): 50 N·m (5.0 kg-m, 36.5 lb-ft)

3) Install pipe and tighten clutch pipe flare nut (3) to specified torque.

Tightening torque
Clutch pipe flare nut (b): 16 N·m (1.6 kg-m, 11.5 lb-ft)

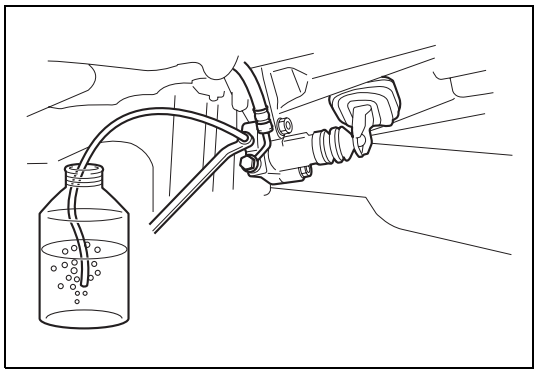

4) Fill brake master cylinder reservoir with specified brake fluid and check for fluid leakage.
5) For procedure of air bleeding, refer to "Air Bleeding of Brake System" in Section 5.
6) Check clutch pedal free travel and clutch release margin. (Refer to "Clutch Pedal Inspection" in this section.)

Unit Repair Overhaul

Clutch Cover, Clutch Disc, Flywheel and Release Bearing Components

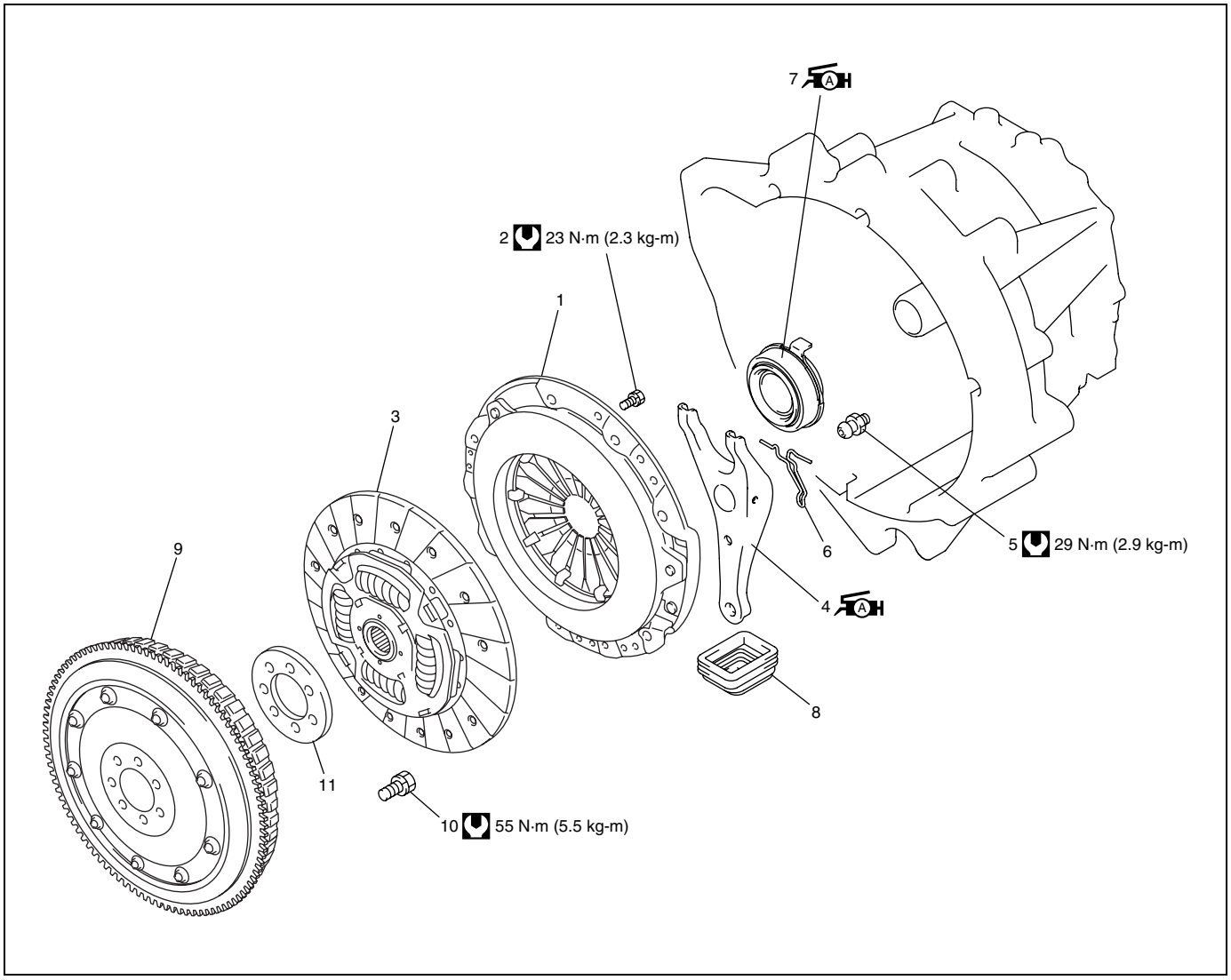

1. Clutch cover	5. Clutch release fork support	9. Flywheel
2. Clutch cover bolt	6. Clutch release fork clip	10. Flywheel bolt
3. Clutch disc	7. Release bearing : Apply grease 99000-25010 to release bearing inner surface.	11. Spacer
4. Release fork : Apply grease 99000-25010 to contact part with clutch release bearing and contact part with clutch release fork support.	8. Clutch release fork boot	Tightening torque

Clutch Cover, Clutch Disc, Flywheel and Release Bearing Removal and Installation

Removal

1) Dismount transmission assembly referring to “Transmission Unit Dismounting and Remounting” in Section 7A2.

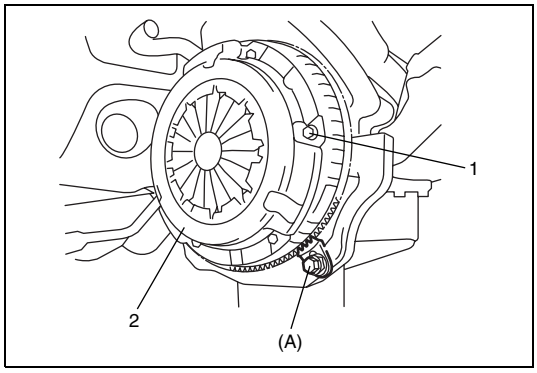

2) Hold flywheel with special tool and remove clutch cover bolts (1) and take off clutch cover (2) and disc.

Special tool
(A): 09916-98110

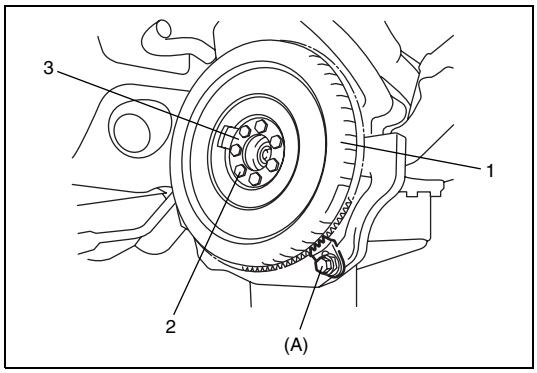

3) Hold flywheel (1) with special tool and remove flywheel bolts (2) and take off flywheel with spacer (3).

Special tool
(A): 09916-98110

4) Remove input shaft bearing from crankshaft by hand, if necessary.

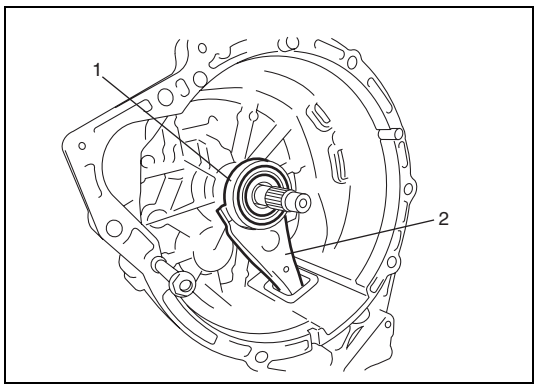

5) Remove release bearing (1) and clutch release fork (2).

Installation

NOTE:

Before assembling, make sure that flywheel surface and pressure plate surface have been cleaned and dried thoroughly.

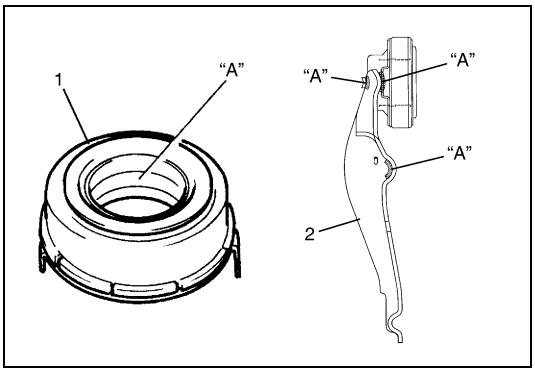

1) Apply grease to release bearing (1) inner surface and release fork (2).

"A": Grease 99000-25010

2) Install input shaft bearing to crankshaft.

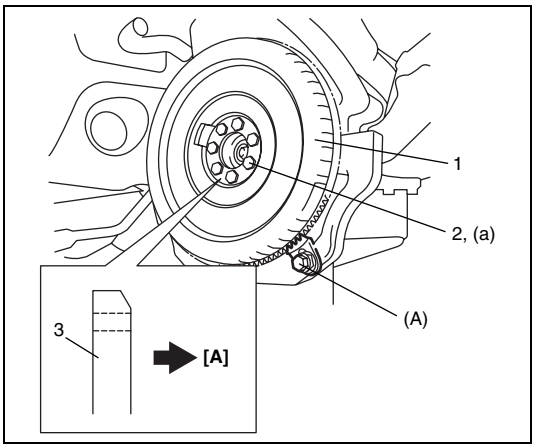

3) Install flywheel (1) with spacer (3) to crankshaft as shown in figure and tighten bolts (2) to specified torque.

Special tool
(A): 09916-98110

Tightening torque
Flywheel bolt
(a): 55 N·m (5.5 kg-m, 40.0 lb-ft)

[A]: Flywheel side

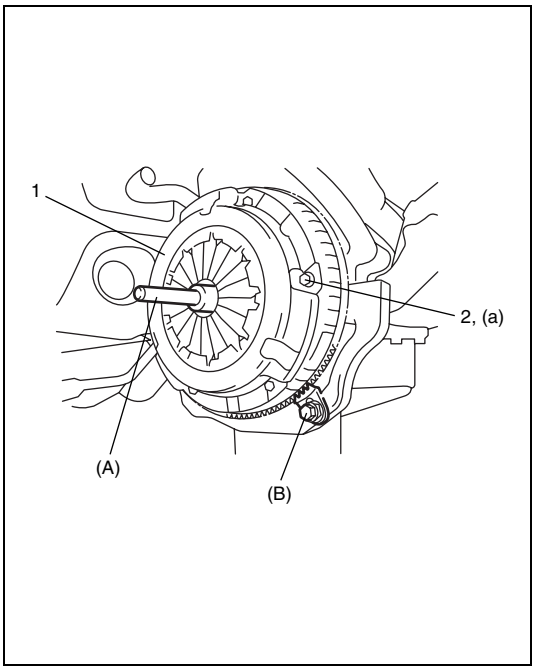

4) Using special tool, install clutch disc and clutch cover (1). Tighten clutch cover bolts (2) to specification using special tool.

NOTE:

- **While tightening clutch cover bolts, compress clutch disc with special tool (A) by hand so that disc centered.**
- **Tighten cover bolts little by little evenly in diagonal order.**

Special tool
(A): 09923-36320
(B): 09916-98110

Tightening torque
Clutch cover bolt
(a): 23 N·m (2.3 kg-m, 17.0 lb-ft)

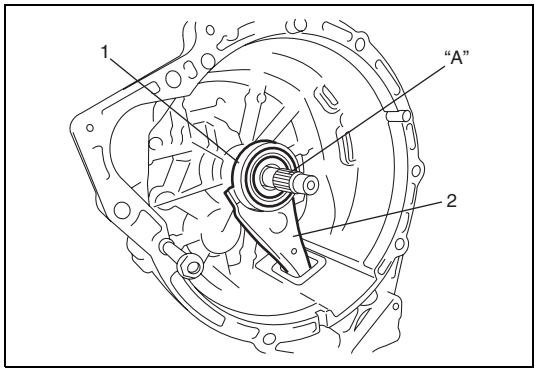

5) Install release bearing (1) and clutch release fork (2).
6) Slightly apply grease to input shaft. Then join transmission with engine. Refer to "Transmission Unit Dismounting and Remounting" in Section 7A2.

"A": Grease 99000-25210

Tightening Torque Specification

Fastening part	Tightening torque		
	N•m	kg-m	lb-ft
Flywheel bolt	55	5.5	40.0
Clutch cover bolt	23	2.3	17.0
Clutch pipe flare nut	16	1.6	11.5
Union bolt	23	2.3	17.0
Clutch master cylinder nut and bolt	13	1.3	9.5
Clutch operating cylinder bolt	50	5.0	36.5
Clutch pedal shaft arm nut	17	1.7	12.5
Bracket nut	23	2.3	17.0
Clutch pedal free height nut	5.5	0.55	4.0

SECTION 8

BODY ELECTRICAL SYSTEM

WARNING:

For vehicles equipped with a Supplement Restraint (Air Bag) System

- **Service on and around the air bag system components or wiring must be performed only by an authorized SUZUKI dealer. Refer to "Air Bag System Components and Wiring Location View" under "General Description" in air bag system section in order to confirm whether you are performing service on or near the air bag system components or wiring. Please observe all WARNINGS and "Service Precautions" under "On-Vehicle Service" in air bag system section before performing service on or around the air bag system components or wiring. Failure to follow WARNINGS could result in unintentional activation of the system or could render the system inoperative. Either of these two conditions may result in severe injury.**
- **Technical service work must be started at least 90 seconds after the ignition switch is turned to the "LOCK" position and the negative cable is disconnected from the battery. Otherwise, the system may be activated by reserve energy in the Sensing and Diagnostic Module (SDM).**

NOTE:

For the items with asterisk (*) in the "CONTENTS" below, refer to the same section of the Service Manual mentioned in "FOREWORD" of this manual.

CONTENTS

Diagnosis 8-3
- Headlight 8-*
- Headlights with Leveling System (If Equipped) 8-*
- Rear Fog Light (If Equipped) 8-*
- Turn Signal and Hazard Warning Lights 8-*
- Clearance, Tail and License Plate Lights 8-*
- Back-up Light 8-*
- Brake Lights 8-*
- Tachometer and ECM 8-*
- Speedometer and VSS 8-*
- Fuel Meter and Fuel Gauge Unit 8-*
- Engine Coolant Temp. (ECT) Meter and ECT Sensor 8-*
- Oil Pressure Light 8-*
- Brake and Parking Brake Warning Light 8-*
- Seat Belt Warning Light 8-*
- Rear Window Defogger (If Equipped) 8-*
- Front Wiper and Washer 8-*
- Rear wiper and washer (If equipped) 8-*
- Power Window Control System (If Equipped) 8-*
- Power Door Lock System (If Equipped) 8-3
- Power Door Lock System with Keyless Entry System (If Equipped) 8-3
- Power Door Mirror Control System 8-4
- Door Mirror Heater (If Equipped) 8-4
- Front Seat Heater (If Equipped) 8-*
- Cigarette Lighter 8-*
- Interior Lights 8-*

On-Vehicle Service 8-5
- Headlight 8-*
  - Headlight switch 8-*
  - Headlight 8-*
  - Bulb replacement 8-*
  - Headlight aiming adjustment with screen 8-*
- Headlights with Leveling System (If Equipped) 8-*
  - Leveling switch 8-*
  - Leveling actuator 8-*
- Turn Signal and Hazard Warning Lights System 8-*
  - Turn signal and hazard warning lights system circuit inspection 8-*
  - Turn signal light switch 8-*
  - Hazard switch 8-*
- Stop (Brake) Lamp 8-*
  - Stop (brake) lamp switch 8-*
- Rear Fog Light (If Equipped) 8-*
  - Rear fog light switch 8-*
- Ignition Switch 8-*
- Combination Meter 8-5
- Fuel Meter/Fuel Gauge Unit 8-*

Fuel level meter..... 8-*
Fuel sender gauge 8-*
Engine Coolant Temperature Meter and Sensor Unit 8-*
Engine coolant temperature meter..... 8-*
Engine coolant temperature sensor 8-*
Oil Pressure Warning Light 8-*
Oil pressure switch..... 8-*
Brake and Parking Brake Warning Light..... 8-*
Brake fluid level switch..... 8-*
Parking brake switch 8-*
Brake vacuum switch 8-*
Seat Belt Warning Light (If Equipped)..... 8-*
Seat belt switch 8-*
Rear Window Defogger..... 8-*
Defogger switch 8-*
Defogger wire..... 8-*
Defogger relay..... 8-*
Wiper and Washer 8-*
Front wiper/washer switch..... 8-*
Wiper motor..... 8-*
Washer pump..... 8-*
Rear Wiper and Washer 8-*
Wiper and washer switch 8-*
Rear wiper motor..... 8-*
Rear wiper intermittent relay 8-*
Power Window Control System (If Equipped) 8-*
Breaker..... 8-*
Power window main switch 8-*
Power Door Lock System (If Equipped)..... 8-8
Power door lock system component location..... 8-*
Power door lock system operation inspection..... 8-*
Power door lock system circuit inspection.....8-8
Driver side key cylinder switch..... 8-*
Power door lock actuator 8-*
Power Door Lock System with Keyless Entry System (If Equipped).....8-10
Power door lock system with keyless entry system component location 8-10
System description.....8-11
Change of signal mode.....8-11
Keyless entry system operation inspection.....8-11
Keyless entry system circuit inspection 8-12
Transmitter.....8-15
Driver side key cylinder switch..... 8-*
Power door lock actuator 8-*
Door switch 8-*
Power Door Mirror Control System (If Equipped) 8-17
Mirror switch..... 8-*
Door mirror actuator.....8-17
Door Mirror Heater (If Equipped) 8-18
Mirror heater switch 8-*
Mirror heater (if equipped) 8-18
Front Seat Heater (If Equipped)..... 8-*
Seat heater switch (driver and passenger side) 8-*
Seat heater wire..... 8-*

Diagnosis

Power Door Lock System (If Equipped)

Condition	Possible Cause	Correction
All are not locked/ unlocked by only driver side key cylinder switch	Circuit fuse blown	After checking short circuit, replace fuse.
	Driver side key cylinder switch faulty	Check system referring to “Power Door Lock System” in this section.
	Power door lock controller faulty	
	Wiring or ground faulty	
Only one door is not locked/unlocked	Power door lock actuator faulty	Check system referring to “Power Door Lock System” in this section.
	Wiring or grounding faulty	

Power Door Lock System with Keyless Entry System (If Equipped)

Condition	Possible Cause	Correction
All are not locked/ unlocked by only driver side key cylinder switch	Circuit fuse blown	After checking short circuit, replace fuse.
	Driver side key cylinder switch faulty	Check system referring to “Power Door Lock System” in this section.
	Power door lock controller faulty	
	Wiring or ground faulty	
Only one door is not locked/unlocked	Power door lock actuator faulty	Check system referring to “Power Door Lock System” in this section.
	Wiring or grounding faulty	
All doors are not locked/unlocked by only keyless entry transmitter	Transmitter battery dead	Replace battery.
	Transmitter faulty	Replace transmitter.
	Code registration error	Perform code registration.
	Door switch faulty	Check system referring to “Power Door Lock System” in this section.
	Key remainder switch (in ignition switch) faulty	
	Power door lock controller faulty	
	Wiring or grounding faulty	
Turn signal lights are not flashed when doors are locked/ unlocked by transmitter	Keyless entry system is in interior light signal mode (M13 engine model)	Change signal mode referring to “Change of Signal Mode” in this section, if necessary.
	Turn signal and hazard warning system faulty	Check system referring to “Turn Signal and Hazard Warning Light System” in this section.
	Power door lock controller faulty	Check system referring “Power Door Lock System With Keyless Entry System” in this section.
	Wiring or grounding faulty	
Interior light does not turn ON when interior light switch is at DOOR position and doors are unlocked by transmitter	Power door lock controller faulty	Check system referring to “Power Door Lock System With Keyless Entry System” in this section.
	Wiring or grounding faulty	

Power Door Mirror Control System

Condition	Possible Cause	Correction
All power mirrors do not operate	Circuit fuse blown	After checking short circuit, replace fuse.
	Power door mirror switch faulty	Check switch.
	Wiring or grounding faulty	Repair as necessary.
One power mirror does not operate	Power door mirror switch faulty	Check switch.
	Actuator (power door mirror motor) faulty	Check actuator.
	Wiring or grounding faulty	Repair as necessary.

Door Mirror Heater (If Equipped)

Condition	Possible Cause	Correction
All door mirrors mist when rear defogger switch is ON	Circuit fuse blown	After checking short circuit, replace fuse.
	Rear defogger switch faulty	Check switch.
	Door mirror heater relay faulty	Check relay
	Wiring or grounding faulty	Repair circuit.
One door mirror mists when rear defogger switch is ON	Mirror heater faulty	Check actuator.
	Wiring or grounding faulty	Repair circuit.

On-Vehicle Service

Combination Meter

Combination Meter Circuit Diagram

M13 Engine Model

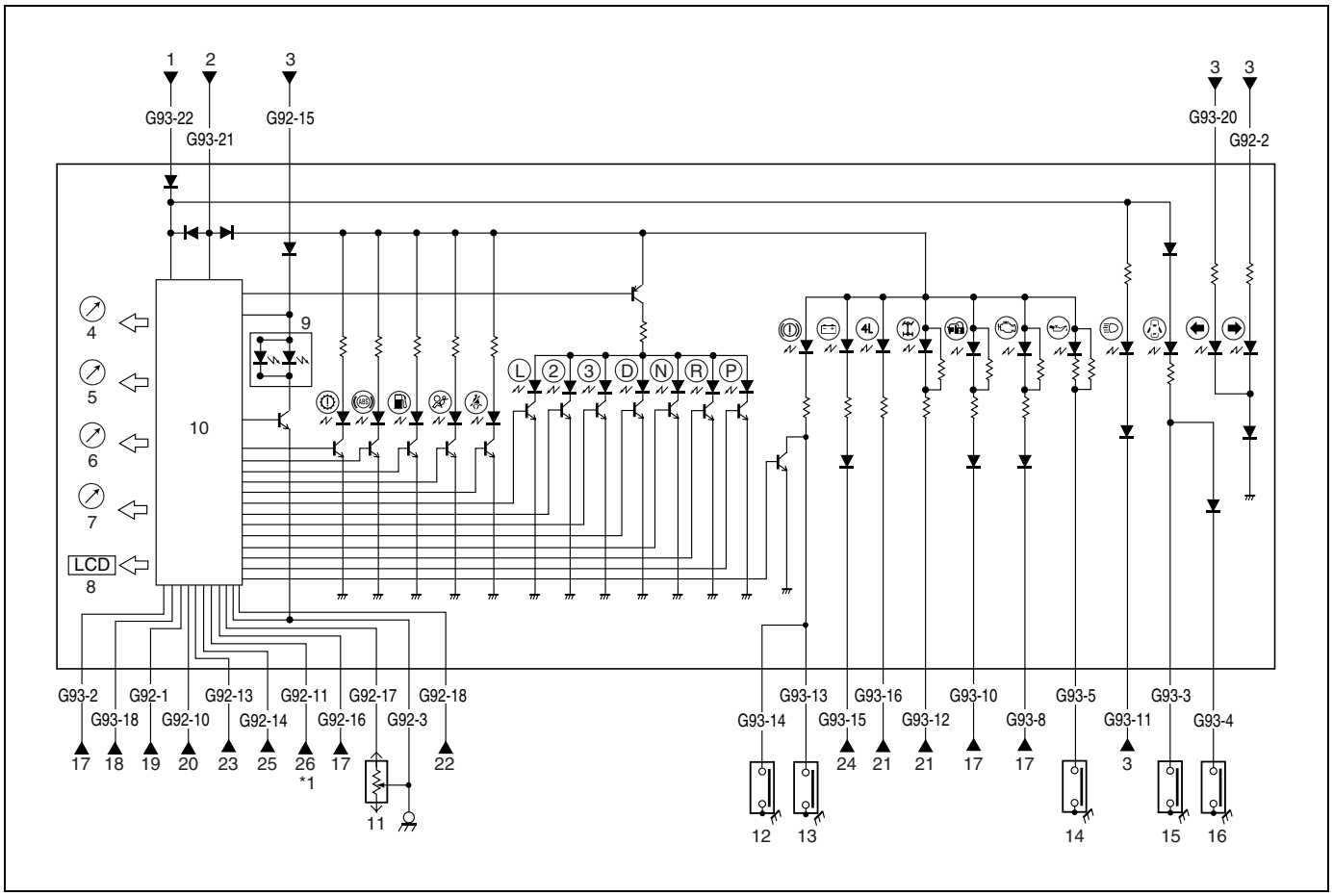

1 Main fuse	10. CPU	19. DLC
2. METER fuse	11. Fuel level gauge	20. ABS control module (if equipped)
3. Combination switch	12. Brake fluid level switch	21. 4WD control module
4. Speedometer	13. Parking brake switch	22. Key remainder switch
5. Tachometer	14. Oil pressure switch	23. SDM (if equipped)
6. ECT meter	15. Door switch (except driver side)	24. Generator
7. Fuel level meter	16. Door switch (driver side)	25. Seat belt switch (if equipped)
8. Odometer (tripmeter)	17. ECM	26. TCM (A/T vehicle)
9. Back light	18. VSS	*1. Serial communication line

K9K Engine Model

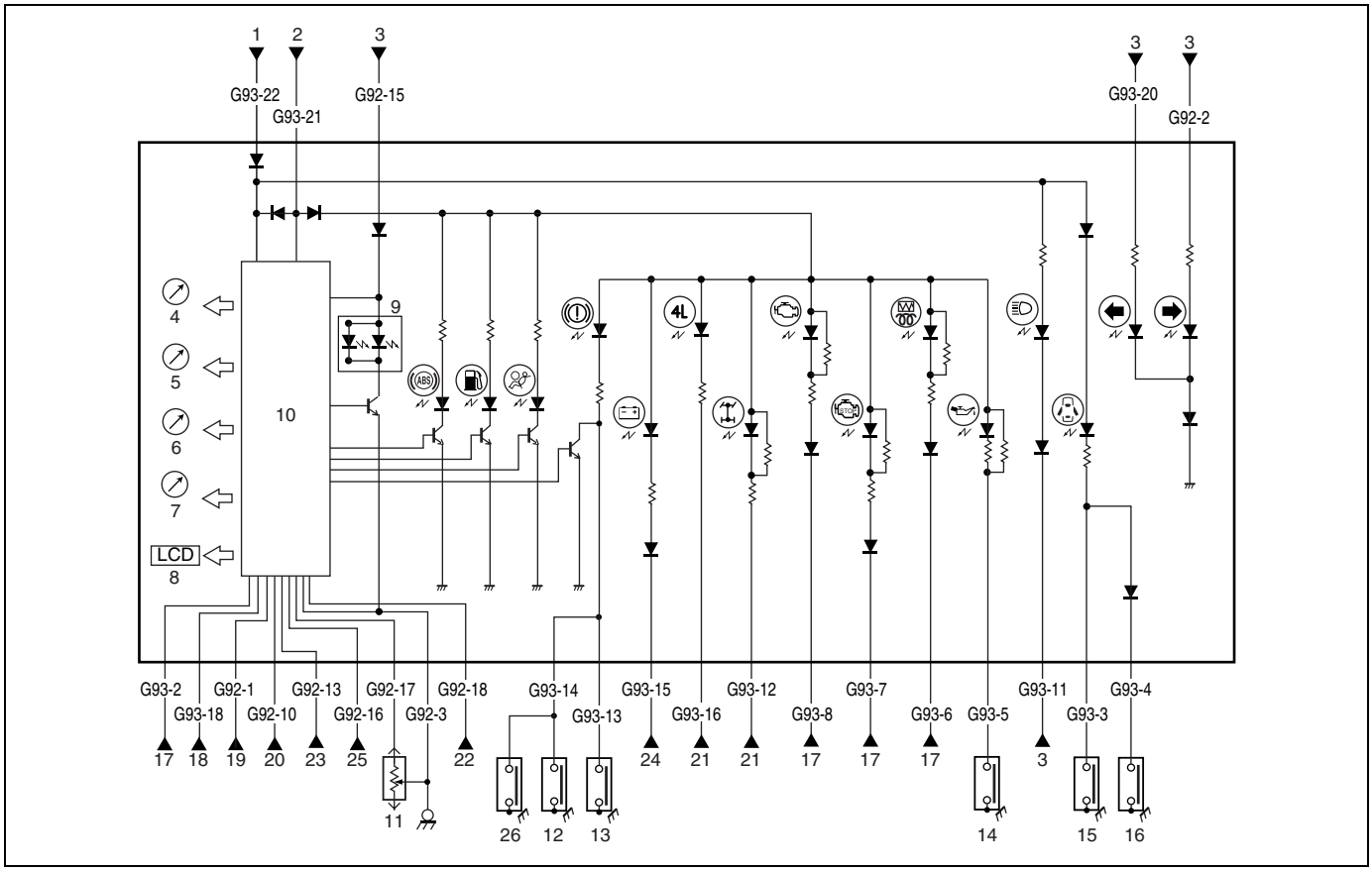

1 Main fuse	10. CPU	19. DLC
2. METER fuse	11. Fuel level gauge	20. ABS control module
3. Combination switch	12. Brake fluid level switch	21. 4WD control module
4. Speedometer	13. Parking brake switch	22. Key remainder switch
5. Tachometer	14. Oil pressure switch	23. SDM
6. ECT meter	15. Door switch (except driver side)	24. Generator
7. Fuel level meter	16. Door switch (driver side)	25. ECT sensor
8. Odometer (tripmeter)	17. ECM	26. Brake vacuum switch
9. Back light	18. VSS	

Terminal Arrangement of Coupler Viewed From Harness Side

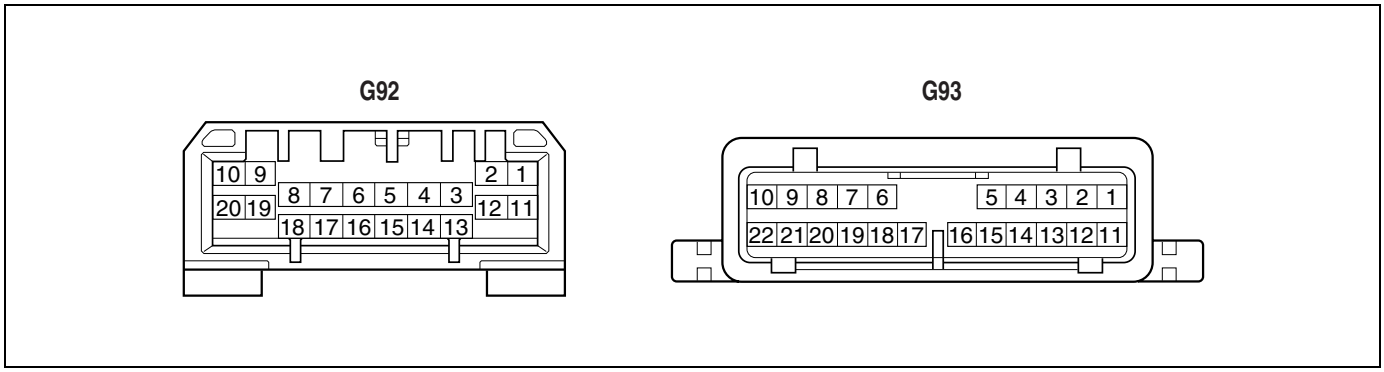

Connector	Terminal	Circuit
G92	1	To DLC
	2	To combination switch (turn R)
	3	To engine ground
	4	–
	5	–
	6	–
	7	–
	8	–
	9	–
	10	To ABS control module (ABS indicator control signal, if equipped)
	11	To TCM (A/T vehicle)
	12	–
	13	To SDM (if equipped)
	14	To seat belt switch (if equipped)
	15	To combination switch (headlight switch)
	16	To ECM (ECT meter signal, M13 engine)
		To ECT sensor (K9K engine)
	17	To fuel level gauge
	18	To key remainder switch
	19	–
	20	–
G93	1	–
	2	To ECM (tachometer signal)

Connector	Terminal	Circuit
G93	3	To door switch (except driver side)
	4	To door switch (driver side)
	5	To oil pressure switch
	6	To ECM (glow plug indicator light/injection warning light/ water in fuel warning light control signal, K9K engine)
	7	To ECM (red stop warning light control signal, K9K engine)
	8	To ECM (MIL control signal)
	9	–
	10	To ECM (immobilizer indicator control signal, if equipped)
	11	To combination switch (dimmer switch)
	12	To 4WD control module (4WD indicator control signal)
	13	To parking brake switch
	14	To brake fluid level switch and brake vacuum switch (K9K engine)
	15	To generator
	16	To 4WD control module (4L indicator control signal)
	17	–
	18	To VSS
	19	–
	20	To combination switch (turn L)
	21	To ignition switch
	22	To main fuse

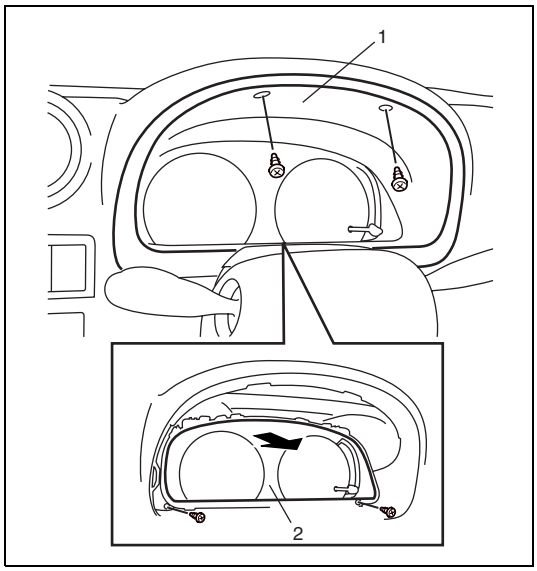

Removal

1) Disconnect negative cable at battery.
2) Remove meter cluster panel (1).
3) Disconnect couplers from combination meter (2).
4) Remove combination meter (2).

Installation

Reverse removal procedure for installation.

Power Door Lock System (If Equipped)

Power door lock system circuit inspection

1) Disconnect negative cable from battery.
2) Disconnect door lock controller coupler (1).
3) Confirm that all doors are unlocked. Connect battery positive (+) and negative (–) terminals to door lock controller coupler terminals and check power door lock operation as follows.
   If it does not operate as specified, repair applicable circuit or check actuator. If it operates as specified, go to next step.

Power door lock operation for vehicle:

Step	TERMINAL [A]		OPERATION
	10	11	
	TERMINAL [B]		
	3	10	
1	⊕	⊖	UNLOCK ⟶ LOCK
2	⊖	⊕	LOCK ⟶ UNLOCK

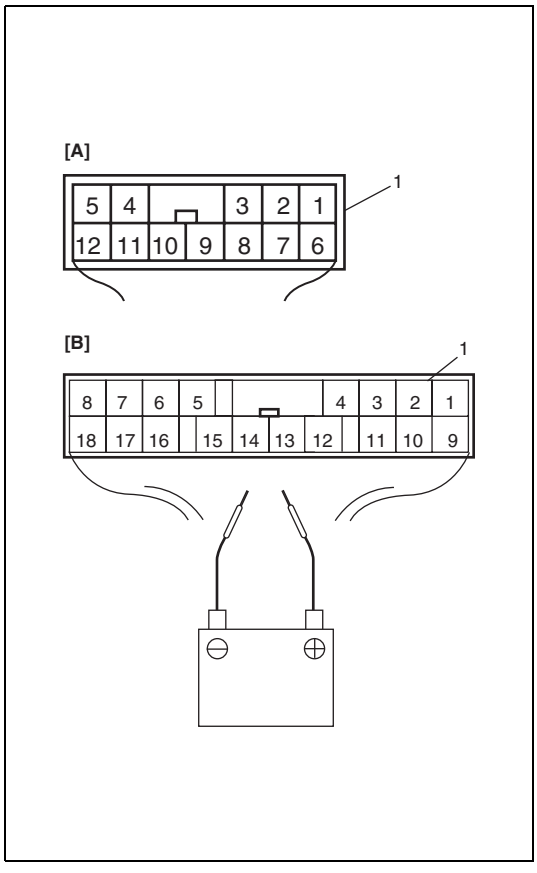

[A]: For M13 engine model and K9K engine model without keyless entry system
[B]: For K9K engine model with keyless entry system
1. Power door lock controller coupler viewed from harness side

4) Connect negative (–) cable to battery.

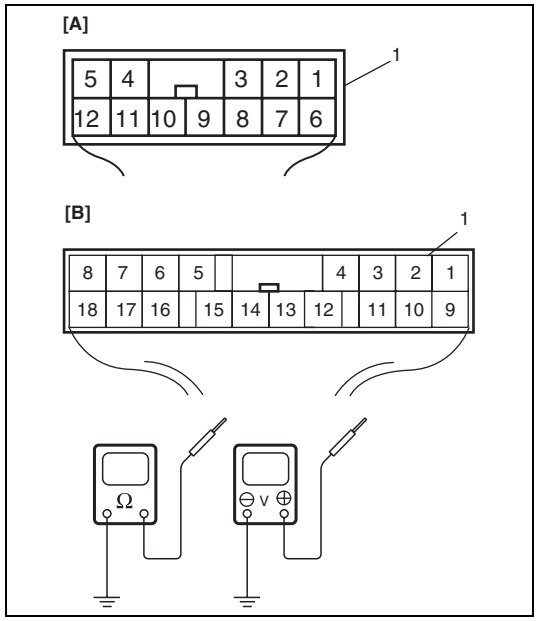

5) Check that the voltage and continuity between the following terminals and body ground are specifications under each conditions.
   If check result is not as specified, repair circuit.
   If check result is OK, recheck power door lock system as follows.
   a) Substitute a known-good door lock controller.
   b) Recheck power door lock system circuit.

[A]: For M13 engine model and K9K engine model without keyless entry system
[B]: For K9K engine model with keyless entry system
1. Power door lock controller coupler viewed from harness side

Power Door Lock System Circuit Check

For M13 Engine Model and K9K Engine Model Without Keyless Entry System

Terminal	Circuit	Specification	Condition
7	Main power supply	10 – 14 V	–
8	Driver side door knob switch lock signal circuit	Continuity	Driver side door knob switch is lock position.
		No continuity	Driver side door knob switch is unlock position.
9	Driver side door knob switch unlock signal circuit	Continuity	Driver side door knob switch is unlock position.
		No continuity	Driver side door knob switch is lock position.
12	Ground	0 – 1 V	–

For K9K Engine Model With Keyless Entry System

Terminal	Circuit	Specification	Condition
5	Driver side door knob switch lock signal circuit	Continuity	Driver side door knob switch is lock position.
		No continuity	Driver side door knob switch is unlock position.
9	Main power supply	10 – 14 V	–
11	ACC switch circuit	10 – 14 V	Ignition switch is ACC position.
		0 – 1 V	Ignition switch is OFF position.
12	Ignition switch circuit	10 – 14 V	Ignition switch is ON position.
		0 – 1 V	Ignition switch is OFF position.
16	Driver side door knob switch unlock signal circuit	Continuity	Driver side door knob switch is unlock position.
		No continuity	Driver side door knob switch is lock position.
17	Ground	0 – 1 V	–

Power Door Lock System with Keyless Entry System (If Equipped)

Power door lock system with keyless entry system component location

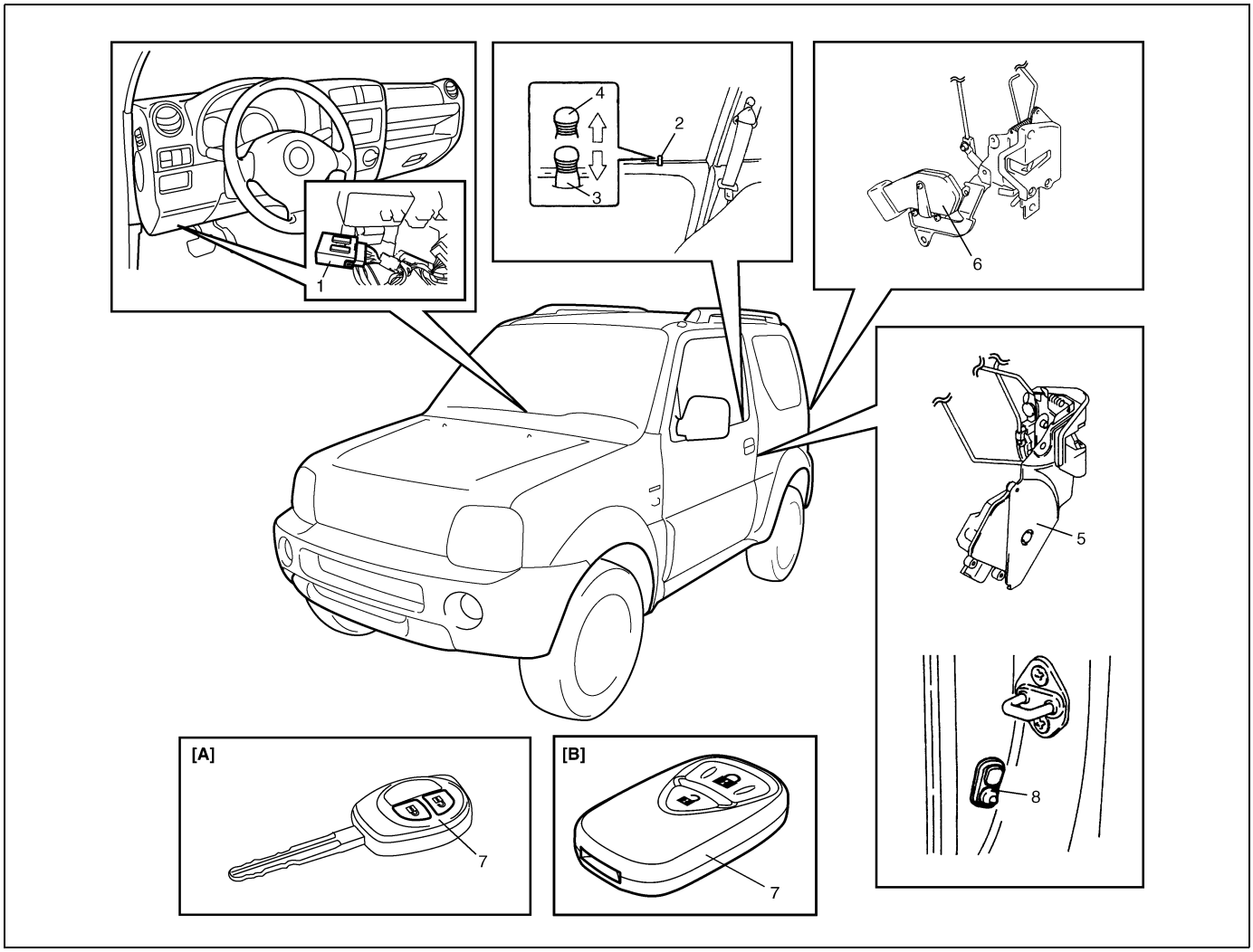

[A]: M13 engine model	3. LOCK position	7. Transmitter
[B]: K9K engine model	4. UNLOCK position	8. Door switch
1. Power door lock controller	5. Front door actuator	
2. Driver side door knob switch	6. Back door actuator	

System description

Only for M13 Engine Model

The keyless entry system has the following signal modes in order to feed back the signal when the controller received LOCK and UNLOCK signals from transmitter.

Received signal / Signal mode	LOCK signal	UNLOCK signal
Hazard warning light signal mode	The hazard warning lights flash once.	The hazard warning lights flash twice and the interior light turns on about 15 seconds.
Interior light signal mode	The interior light flashes twice.	The interior light turns on about 15 seconds.

NOTE:

- **These signal modes are able to change referring to "Change of Signal Mode" in this section.**
- **The initial condition is the hazard warning light signal mode.**

Change of signal mode

Only for M13 Engine Model

1) Confirm that all doors are closed and ignition key is out of ignition switch.
2) Perform the following procedures within 15 seconds.
   a) Insert ignition key to ignition switch and pull out ignition key from ignition switch.
   b) Repeat step a) two times.
   c) Insert ignition key to ignition switch, and then push "LOCK" button on transmitter more than five times.
3) Confirm that hazard warning light or interior light flash once. With this, change of signal mode is completed.

Keyless entry system operation inspection

NOTE:

For M13 engine model, if keyless entry system is in interior light signal mode, change to hazard warning light signal mode referring to "Change of Signal Mode" in this section.

1) Confirm that power door lock system is good condition referring to "Power Door Lock System Operation Inspection" in this section.
2) Confirm that turn signal and hazard warning light system is good condition referring to "Turn Signal and Hazard Warning Light System" in this section.
3) Check transmitter battery for dead. If battery is dead, replace battery referring to "Replacement of Transmitter Battery" under "Transmitter" in this section.
4) Confirm that all doors are closed and unlocked.

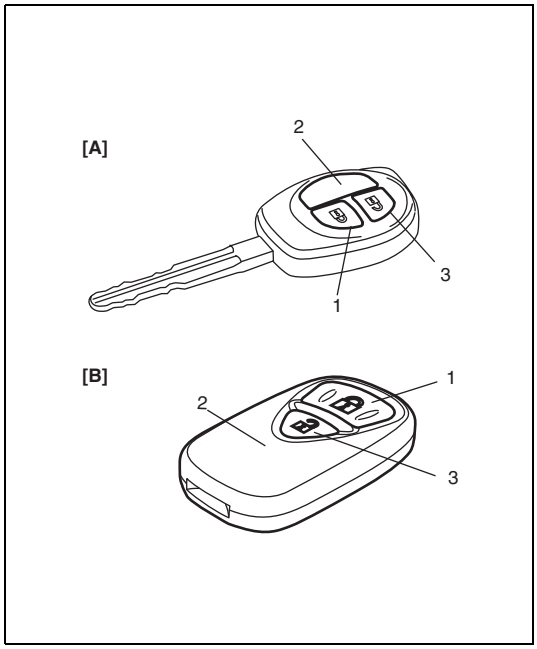

5) Check the following operation:
   a) When pushing “LOCK” button (1) on transmitter (2), check all doors lock and hazard warning lights flash once.
   b) When pushing “UNLOCK” button (3) on transmitter (2), check all doors unlock and hazard warning lights flash twice and interior light turn on about 15 seconds with the interior light switch in the middle position.

[A]: M13 engine model
[B]: K9K engine model

If check result is not satisfied, go to “Keyless Entry System Circuit Inspection” in this section.

Keyless entry system circuit inspection

NOTE:

For M13 engine model, if keyless entry system is in interior light signal mode, change to hazard warning light signal mode referring to “Change of Signal Mode” in this section.

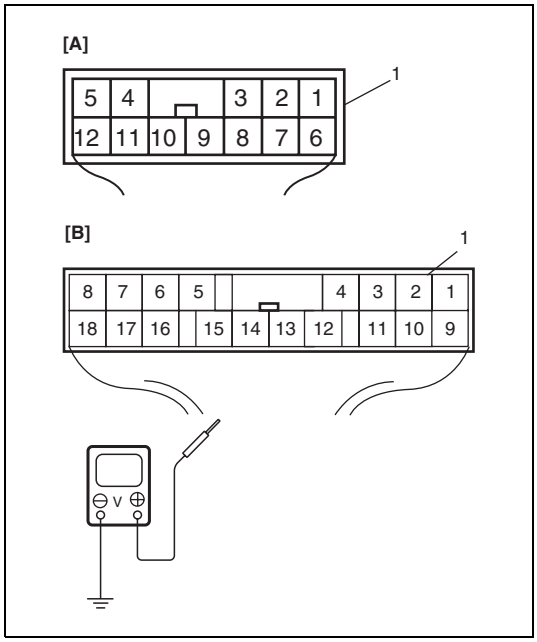

Check that the voltage and continuity between the following terminals and body ground are specifications under each conditions.
If check result is not as specified, check applicable circuit.
If circuit is normal, recheck keyless entry system circuit as follows.

1) Substitute a known-good door lock controller.
2) Register key code referring to “Code Registration Procedure” under “Transmitter” in this section.
3) Recheck keyless entry system circuit.

[A]: M13 engine model
[B]: K9K engine model
1. Door lock controller

Keyless Entry System Circuit Check

M13 Engine Model

Terminal	Circuit	Specification	Condition
2	Key remainder circuit	10 – 14 V	Ignition key is in ignition switch.
		0 – 1 V	Ignition key is not in ignition switch.
4	Door switch & interior light circuit	0 – 1 V	Driver side, passenger side or back door is open.
		10 – 14 V	All doors are close.
		Figure “A”	Fulfill the following conditions. • All door is close. • Interior light switch is middle position. • 15 seconds after pushing “UNLOCK” button on transmitter.
5	Hazard warning signal circuit	Figure “B”	Push “LOCK” button on transmitter.
		Figure “C”	Push “UNLOCK” button on transmitter.

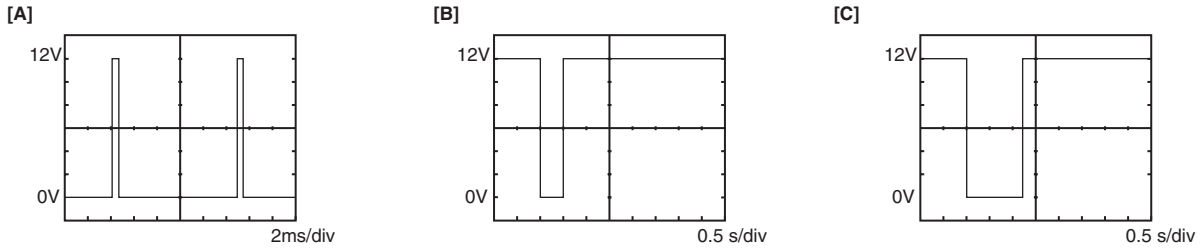

[A]: Figure “A”
[B]: Figure “B”
[C]: Figure “C”

K9K Engine Model

Terminal	Circuit	Specification	Condition
7	Hazard waning signal circuit (right side)	Figure “A”	Push “LOCK” button on transmitter once.
		Figure “B”	Push “UNLOCK” button on transmitter once.
8	Hazard waning signal circuit (left side)	Figure “A”	Push “LOCK” button on transmitter once.
		Figure “B”	Push “UNLOCK” button on transmitter once.
15	Door switch & interior light circuit	0 – 1 V	Driver side, passenger side or back door is open.
		10 – 14 V	All doors are close.
		Figure “C”	Fulfill the following conditions. • All door is close. • Interior light switch is middle position. • 20 seconds after pushing “UNLOCK” button on transmitter once

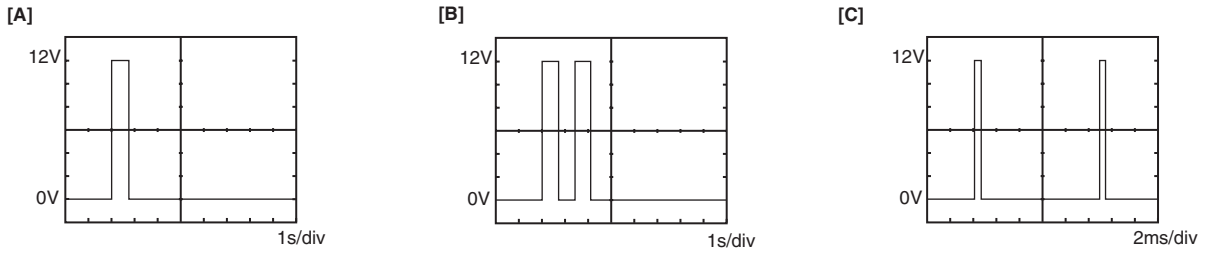

[A]: Figure “A”
[B]: Figure “B”
[C]: Figure “C”

Transmitter

Replacement of Transmitter Battery

CAUTION:

Use care not to allow grease or dirt to be attached on the printed circuit board and the battery.

NOTE:

- **To prevent theft, be sure to break the transmitter before discarding it.**
- **Dispose of the used battery properly according to applicable rules or regulations. Do not dispose of lithium batteries with ordinary household trash.**

If transmitter becomes unreliable, replace transmitter battery as follows.

M13 Engine Model

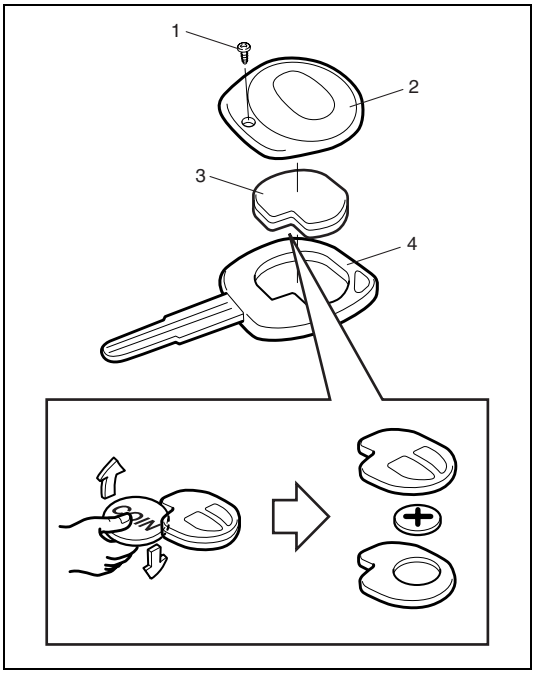

1) Remove screw (1) and transmitter cover (2).
2) Remove transmitter (3) from transmitter holder (4).
3) Put edge of coin or flat blade screwdriver in slot of transmitter (3) and by pry it open.
4) Replace the battery (lithium disc-type CR1616 or equivalent battery) so its + terminal faces "+" mark on transmitter.
5) Fit together transmitter (3) and install it into transmitter holder (4).
6) Install transmitter cover (2) and screw (1).
7) Make sure the door locks can be operated with transmitter.

K9K Engine Model

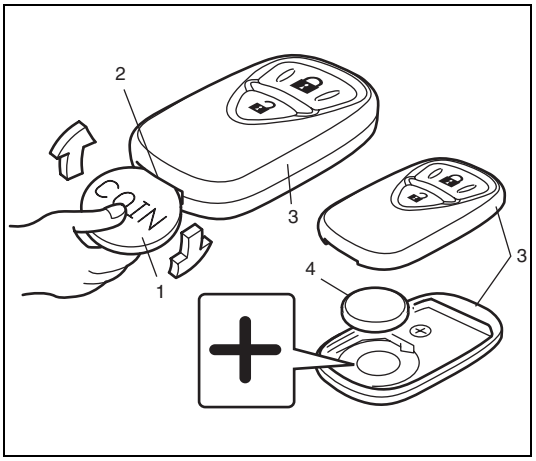

1) Put the edge of a coin (1) or a flat blade screwdriver in the slot (2) of transmitter (3) and pry it open.
2) Replace battery (lithium disc-type CR 2032 or equivalent battery) (4) so its + terminal faces the "+" mark of the transmitter (3).
3) Close the transmitter (3) firmly.
4) Make sure the door locks can be operated with transmitter (3).

Code Registration Procedure

If transmitter or door lock controller is replaced with new one or additional transmitter(s) is necessary, register key code(s) as follows.

M13 Engine Model

1) Confirm that the vehicle is the following conditions.
   - All doors are closed.
   - Ignition key is out of ignition switch.
   - Driver side door is unlocked and its window is opened.
2) Disconnect negative (–) cable from battery.
3) After 30 seconds, perform the following procedure within 60 seconds.
   a) Connect negative (–) cable to battery.
   b) Operate driver side door knob switch from lock to unlock twice.
   c) Push “LOCK” button on transmitter and confirm that all doors are operated from lock to unlock.
   d) Push driver side door knob switch to lock position.
   e) Push “LOCK” button on transmitter twice and confirm that all doors are operated from unlock to lock. With this, code registration is completed.

NOTE:

- **Two transmitter codes can be registered.**
- **When a new transmitter code is registered, the oldest one will be cleared.**

K9K Engine Model

1) Make sure that all doors are closed and ignition key is out of ignition key cylinder.
2) Open driver side door.
3) Turn ignition switch to ON position, and then remove ignition key from ignition key cylinder within 10 seconds after that.
4) Push and release driver side door switch (1) at 3 times by hand within 20 seconds after removing ignition key from ignition key cylinder.
5) Turn ignition switch to ON position, and then remove ignition key from ignition key cylinder within 10 seconds after that.
6) Push “UNLOCK” button (2) on transmitter (3) and confirm that all doors are operated from lock to unlock.
   With this, code registration is completed.

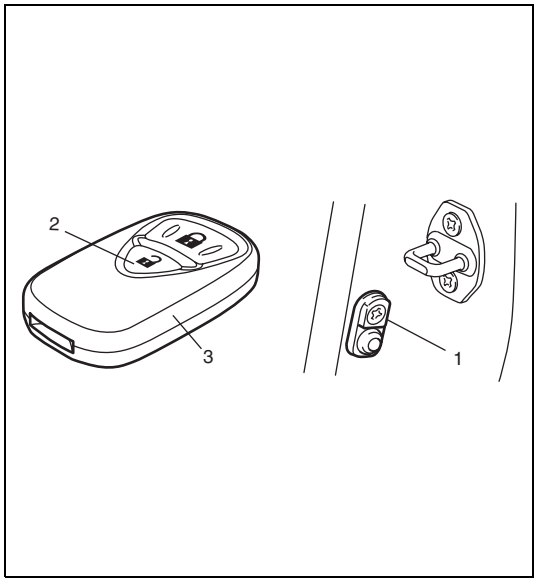

NOTE:

- **Three transmitter codes can be registered.**
- **When a new transmitter code is registered, the oldest one will be cleared.**

Power Door Mirror Control System (If Equipped)

Door mirror actuator

Inspection

1) Remove front door inner garnish from front door.
2) Disconnect door mirror coupler.
3) Check that door mirror operates properly when battery voltage is applied to coupler terminals.
   Connect battery positive and negative terminal to the door mirror terminal shown below.
   If it does not follow the table's operation, replace door mirror assembly.

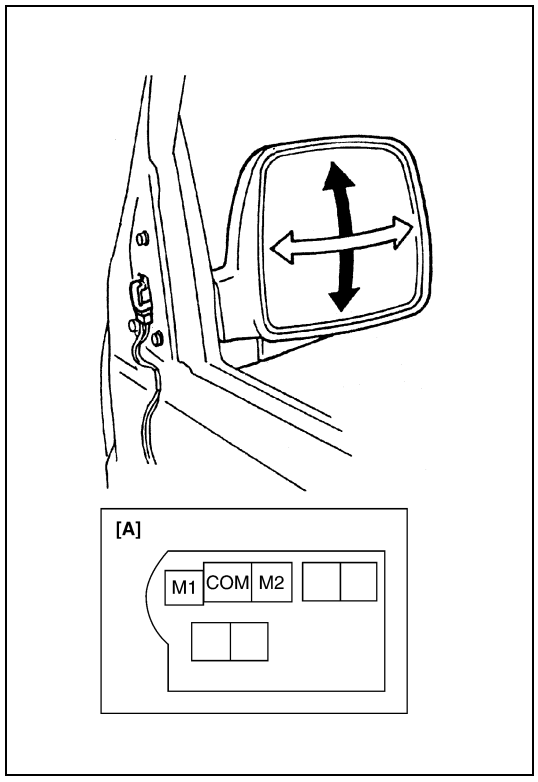

Terminal / Operation	COM	M1	M2
Up	⊖	⊕	
Down	⊕	⊖	
Left	⊖		⊕
Right	⊕		⊖

NOTE:

When installing door mirror to door, be careful not to pinch harness between door and door mirror.

[A]: Door mirror coupler

Door Mirror Heater (If Equipped)

Mirror heater (if equipped)

Inspection

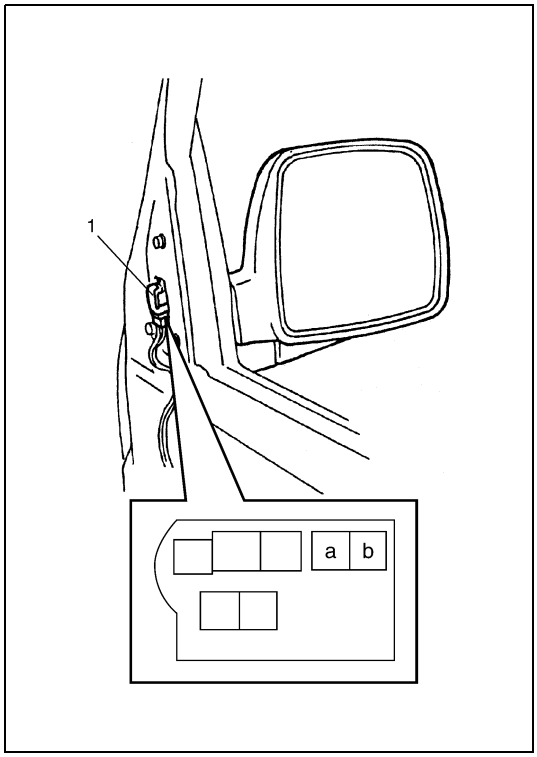

1) Remove door inner garnish from front door.
2) Disconnect door mirror coupler (1).
3) Check for continuity between terminals “a” and “b”.
   if not continuity, replace outside mirror.

Prepared by
SUZUKI MOTOR CORPORATION

1st Ed. January, 2006