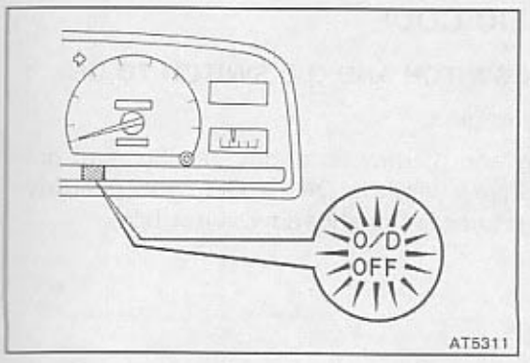

Diagnostic Code Output

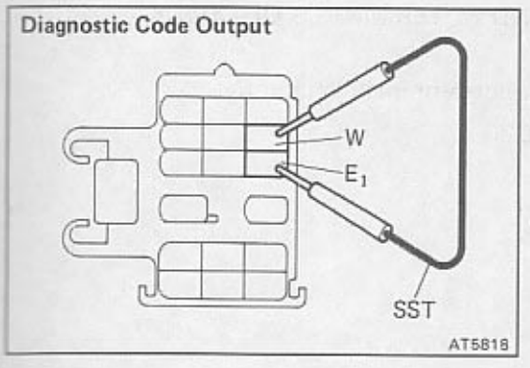

Voltage Check

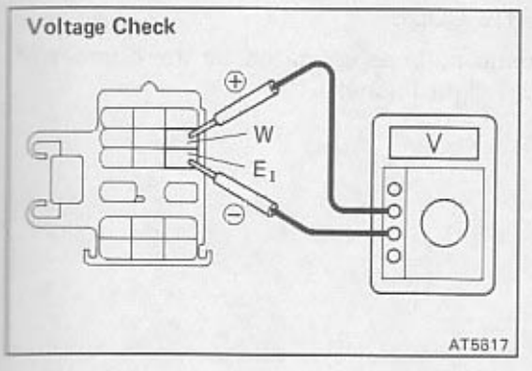

Diagnosis System

DESCRIPTION

1. A self-diagnosis function is built into the electrical control system. Warning is indicated by the overdrive OFF indicator light.

   HINT: Warning and diagnostic codes can be read only when the overdrive switch is ON. If OFF, the overdrive OFF light is lit continuously and will not blink.

   (a) If a malfunction occurs within the speed sensors (No.1 or 2) or solenoids (No.1, 2 or 4), the overdrive OFF light will blink to warn the driver.

   However, there will be no warning of a malfunction with lock-up solenoid.

   (b) The diagnostic code can be read by the number of blinks of the overdrive OFF indicator light when terminals W and E_1 are connected. (See page AT-14)

   (c) The throttle position sensor or brake signal are not indicated, but inspection can be made by checking the voltage at terminal W of the check connector.

   (d) The signals to each gear can be checked by measuring the voltage at terminal W while driving.

2. The diagnostic code (trouble code) is retained in memory by the ECT ECU and due to back-up voltage, is not canceled out when the engine is turned off. Consequently, after repair, it is necessary to turn the ignition switch off and remove the fuse STOP (10A) or disconnect the ECT ECU connector to cancel out the diagnostic (trouble) code. (See page AT-15)

   HINT:
   - Low battery voltage will cause faulty operation of the diagnosis system. Therefore, always check the battery first.
   - Use a voltmeter and ohmmeter that have an impedance of at least 10 kΩ/V.

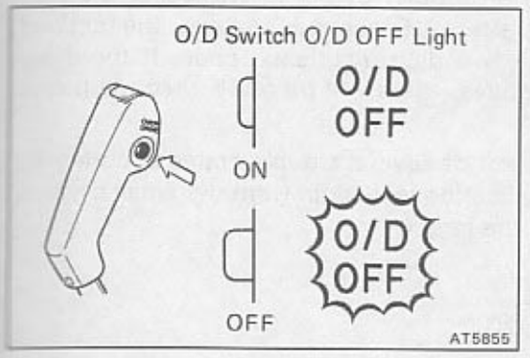

CHECK "O/D OFF" INDICATOR LIGHT

1. Turn the ignition switch ON.
2. The "O/D OFF" light will come on when the O/D switch is placed at OFF.
3. When the O/D switch is set to ON, the "O/D OFF" light should go out.

If the "O/D OFF" light flashes when the O/D switch is set to ON, the electronic control system is faulty.

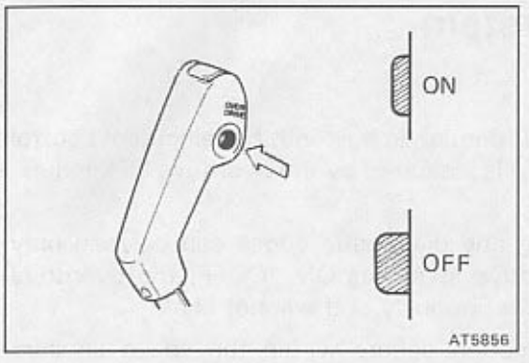

READ DIAGNOSTIC CODE

1. TURN IGNITION SWITCH AND O/D SWITCH TO ON

Do not start the engine.

HINT: Warning and diagnostic codes can be read only when the overdrive switch is ON. If OFF, the overdrive OFF light will light continuously and will not blink.

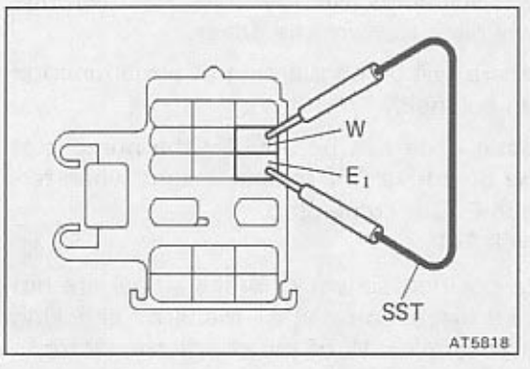

2. CONNECT W AND E_1 TERMINALS OF CHECK CONNECTOR

Using SST, connect terminals W and E_1.

SST 09843-18020

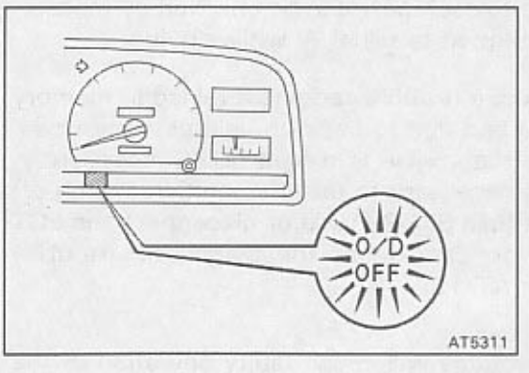

3. READ DIAGNOSTIC CODE

Read the diagnostic code as indicated by the number of times the O/D OFF light flashes.

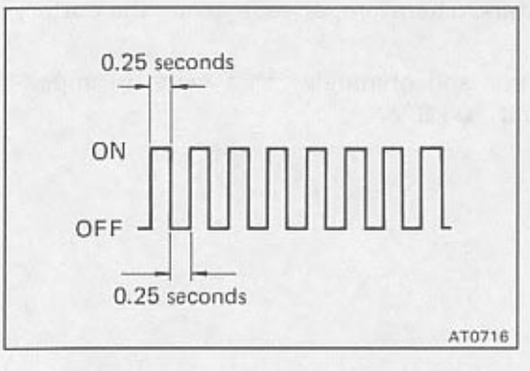

(Diagnostic Code Indication)

- If the system is operating normally, the light will flash 2 times per second.

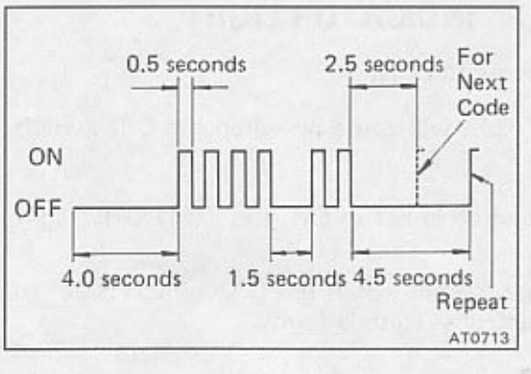

- In the event of a malfunction, the light will flash 1 time per second. The number of blinks will equal the first number and, after 1.5 seconds pause, the second number of the two digit diagnostic code. If there are two or more codes, there will be a 2.5 seconds pause between each.

HINT: In the event of several trouble codes occuring simultaneously, indication will begin from the smaller value and continue to the larger.

4. REMOVE SST

SST 09843-18020

DIAGNOSTIC CODES

Code No.	Light Pattern	Diagnosis System
—		Normal
42		Defective No.1 speed sensor (in combination meter) — severed wire harness or short circuit
61		Defective No.2 speed sensor (in ATM) — severed wire harness or short circuit
62		Severed No.1 solenoid or short circuit — severed wire harness or short circuit
63		Severed No.2 solenoid or short circuit — severed wire harness or short circuit
64		Severed lock-up solenoid or short circuit — severed wire harness or short circuit
65		Severed No.4 solenoid or short circuit — severed wire harness or short circuit

HINT: If codes 62, 63, 64 or 65 appear, there is an electrical malfunction in the solenoid.
Causes due to mechanical failure, such as a stuck valve, will not appear.

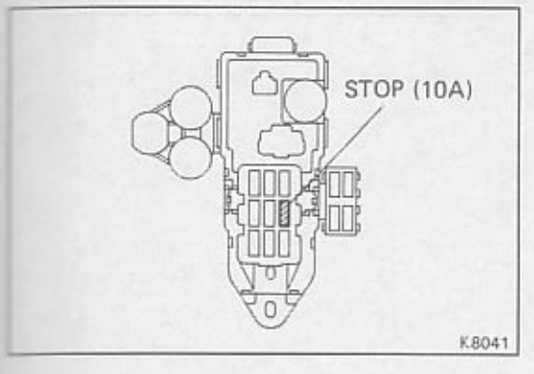

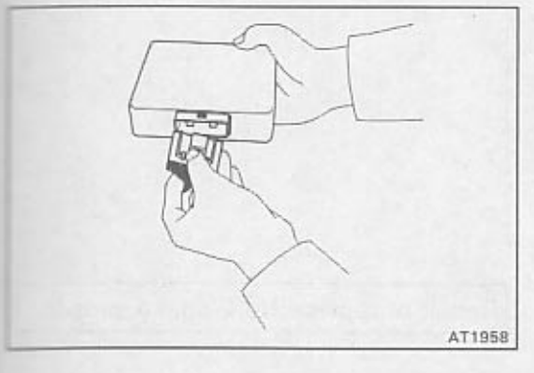

CANCEL OUT DIAGNOSTIC CODE

1. After repair of the trouble area, the diagnostic code retained in memory by the ECT ECU must be canceled by removing the fuse STOP (10A) for 10 seconds or more, depending on ambient temperature (the lower the temperature, the longer the fuse must be left out) with the ignition switch OFF.

   HINT:
   - Cancellation can be also done by removing the battery negative (—) terminal, but in this case other memory systems will be also canceled out.
   - The diagnostic code can be also canceled out by disconnecting the ECT ECU connector.
   - If the diagnostic code is not canceled out, it will be retained by the ECT ECU and appear along with a new code in event of future trouble.

2. After cancellation, perform a road test to confirm that a "normal code" is now read on the O/D OFF light.

TROUBLESHOOTING FLOW-CHART

HINT:

- If diagnostic code Nos. 42, 61, 62, 63 or 65 are output, the overdrive OFF indicator light will begin to blink immediately to warn the driver. However, an impact or shock may cause the blinking to stop; but the code will still be retained in the ECT ECU memory until canceled out.
- There is no warning for diagnostic code No.64.
- In the event of a simultaneous malfunction of both No.1 and No.2 speed sensors, no diagnostic code will appear and the fail-safe system will not function. However, when driving in the D range, the transmission will not up-shift from first gear, regardless of the vehicle speed.

Diagnostic code 42 (No.1 speed sensor circuitry)

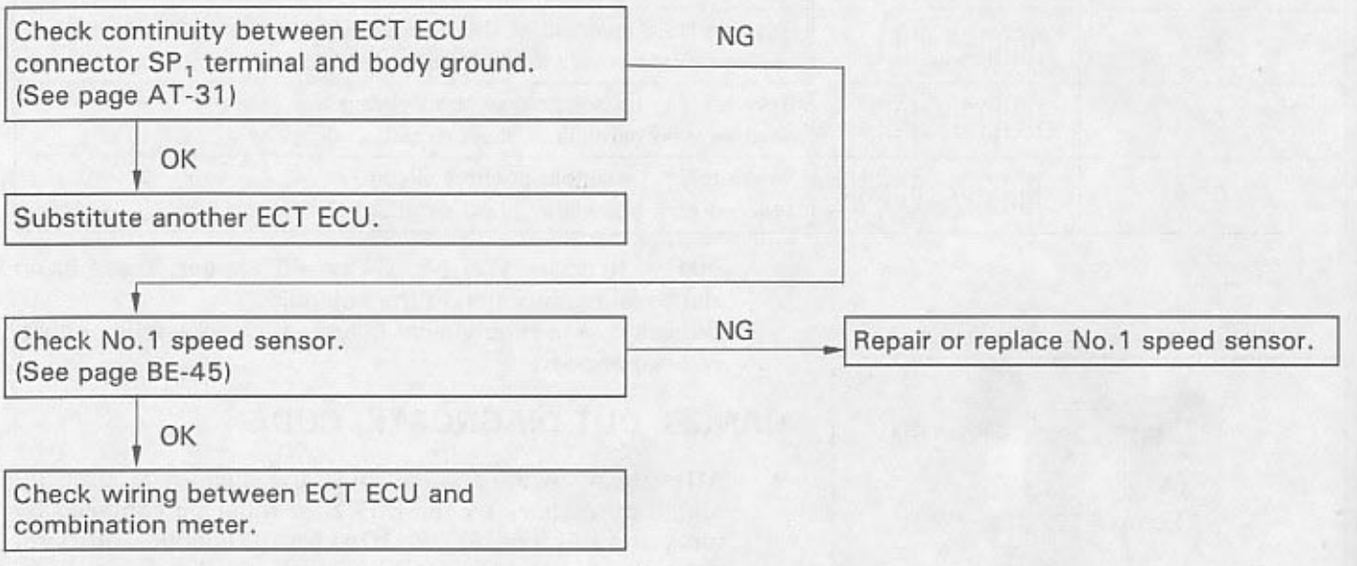

Diagnostic code 61 (No. 2 speed sensor circuitry)

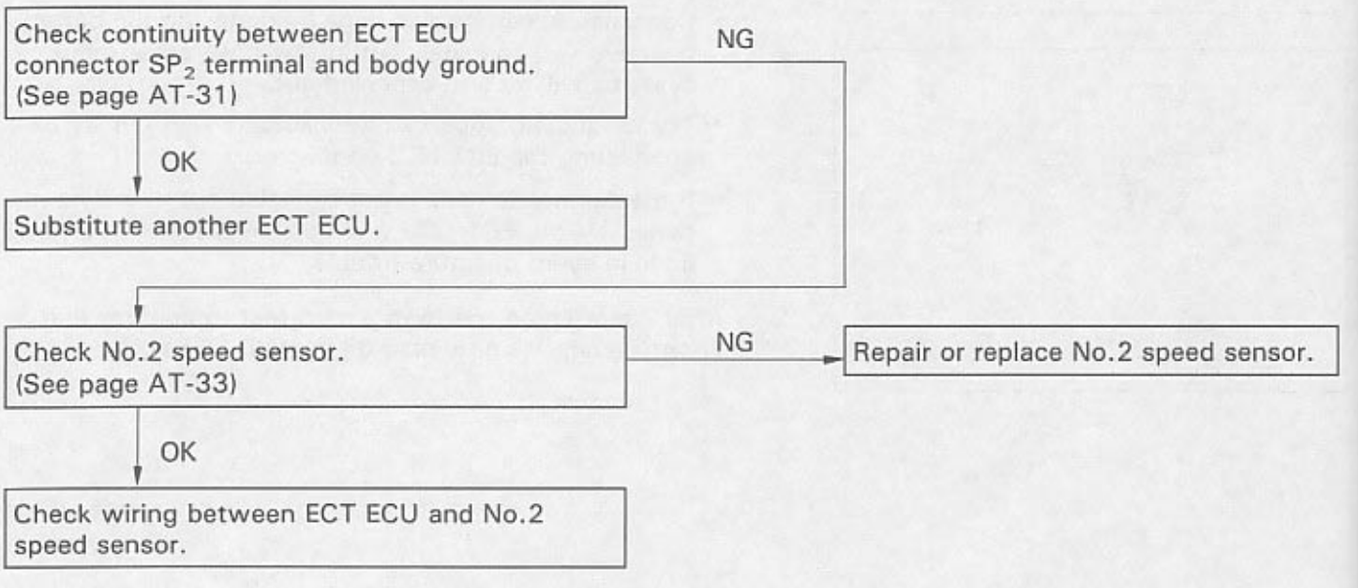

Diagnostic code 62 (No.1 solenoid valve circuitry)

Check resistance of No.1 solenoid valve at ECT ECU connector.
(See page AT-32)

NG → Substitute another ECT ECU.

OK ↓

Substitute another ECT ECU.

Remove the transmission oil pan and check resistance of No.1 solenoid valve connector and body ground.
Resistance: 11 — 15 Ω

NG → Replace No.1 solenoid valve.

OK ↓

Check wiring between No.1 solenoid valve and ECT ECU.

Diagnostic code 63 (No.2 solenoid valve circuitry)

Check resistance of No.2 solenoid valve at ECT ECU connector.
(See page AT-32)

NG → Substitute another ECT ECU.

OK ↓

Substitute another ECT ECU.

Remove the transmission oil pan and check resistance of No.2 solenoid valve connector and body ground.
Resistance: 11 — 15 Ω

NG → Replace No.2 solenoid valve.

OK ↓

Check wiring between No.2 solenoid valve and ECT ECU.

Diagnostic code 64 (Lock-up solenoid valve circuitry)

Check resistance of lock-up solenoid valve at ECT ECU connector.
(See page AT-32)

NG → Substitute another ECT ECU.

OK ↓

Substitute another ECT ECU.

Remove the transmission oil pan and check resistance of lock-up solenoid valve connector and body ground.
Resistance: 11 — 15 Ω

NG → Replace lock-up solenoid valve.

OK ↓

Check wiring between lock-up solenoid valve and ECT ECU.
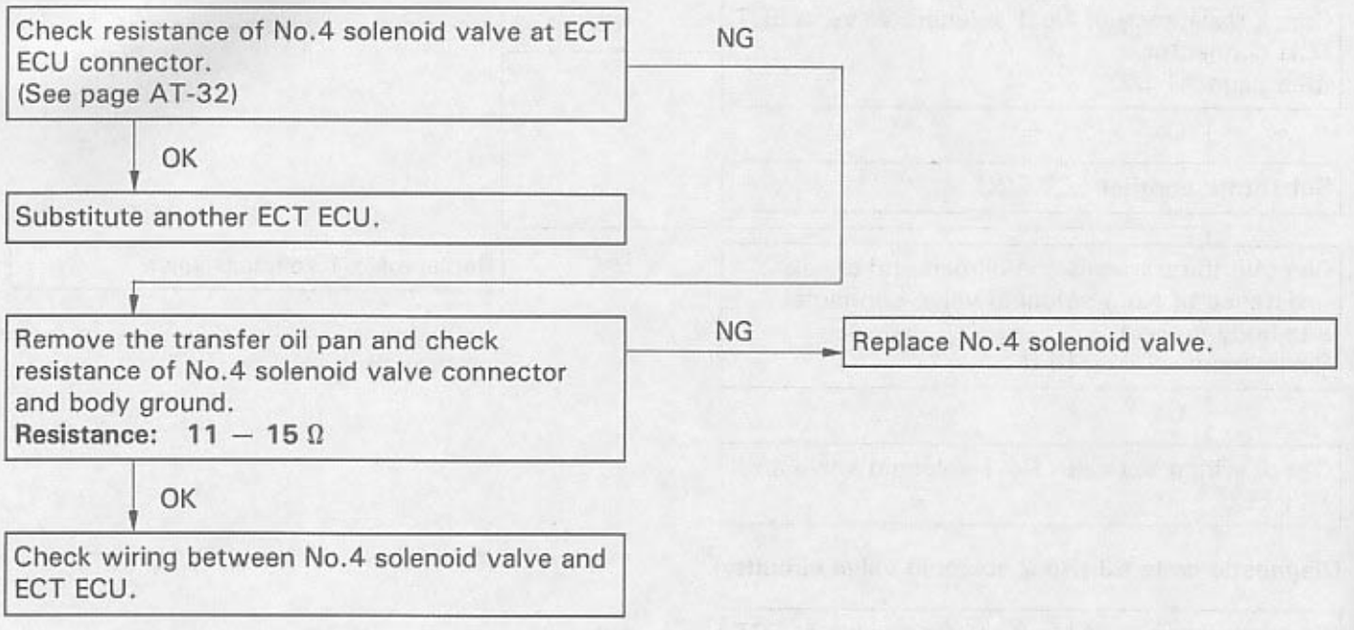
Diagnostic code 65 (No.4 solenoid valve circuitry)