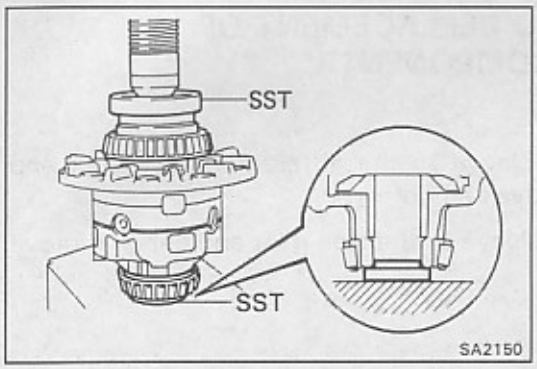

ASSEMBLY OF DIFFERENTIAL CARRIER

(See page SA-10)

1. INSTALL SIDE BEARINGS

Using SST and a press, install the two side bearings on the differential case.

SST 09223-15020, 09608-30012 (09608-04060)

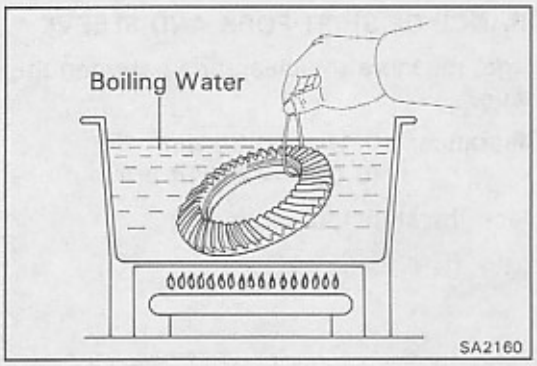

2. INSTALL RING GEAR ON DIFFERENTIAL CASE

(a) Clean the contact surfaces of the differential case and ring gear.

(b) Heat the ring gear in boiling water.

(c) After the moisture on the ring gear has completely evaporated, quickly install the ring gear to the differential case.

HINT: Align matchmarks on the ring gear and the differential case.

(d) Temporarily install five new lock plates and the ten bolts so that the bolt holes in the ring gear and differential case are not misaligned.

NOTICE: The ring gear set bolts should not be tightened until the ring gear has cooled sufficiently.

(e) After the ring gear has cooled sufficiently, torque the ring gear set bolts.

Torque: 985 kg-cm (71 ft-lb, 97 N·m)

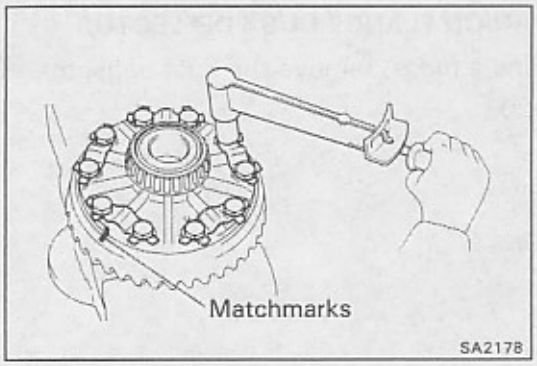

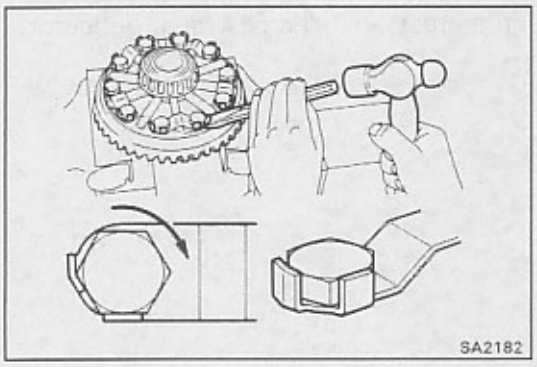

(f) Using a hammer and drift punch, stake the lock plates.

HINT: Stake one claw flush with the flat surface of the nut. For the claw contacting the protruding portion of the nut, stake the half on the tightening side.

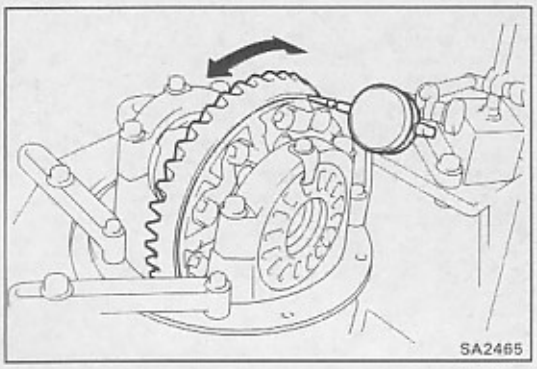

3. CHECK RING GEAR RUNOUT

(a) Install the differential case onto the carrier.

(b) Install the bearing caps. (See page SA-20)

(c) Using a dial indicator, measure the runout of ring gear.

Maximum runout: 0.10 mm (0.0039 in.)

(d) Remove the differential case.
(See page SA-14)

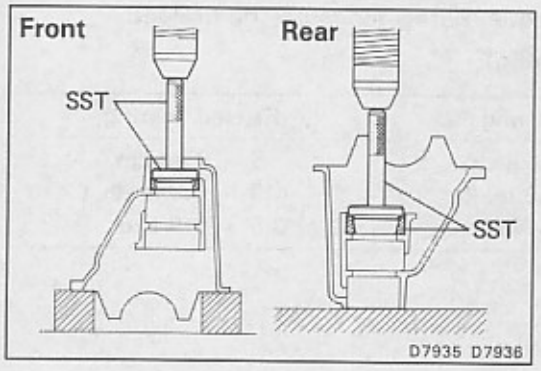

4. **INSTALL DRIVE PINION FRONT AND REAR BEARING OUTER RACES**

Using SST and a press, install the outer races.

SST 09608-30012

Rear (09608-04020, 09608-04110)
Front (09608-04020, 09608-04100)

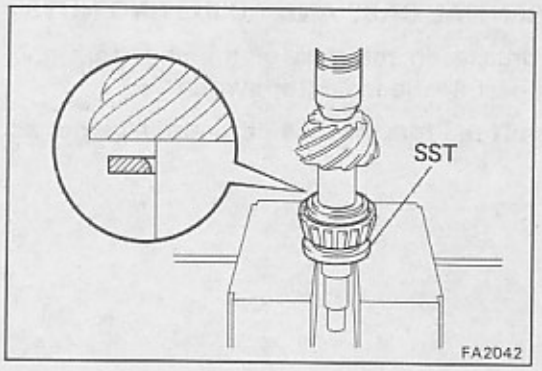

5. **INSTALL DRIVE PINION FRONT BEARING**

(a) Install the washer on the drive pinion with the chamfered end facing the pinion gear.

HINT: First fit a washer with the same thickness as the washer which was removed, then after checking the teeth contact pattern, replace the washer with one of a different thickness if necessary.

(b) Using SST and press, press in the front bearing onto the drive pinion.

SST 09506-30012

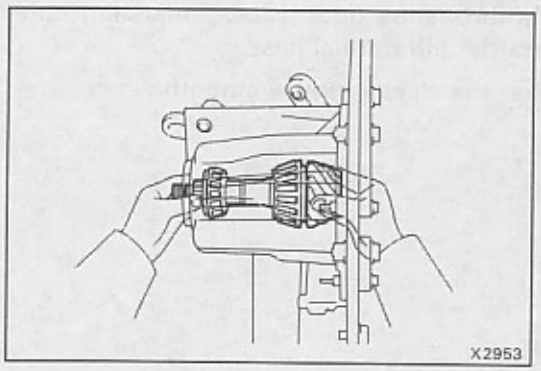

6. **TEMPORARILY ADJUST DRIVE PINION PRELOAD**

(a) Install the drive pinion, rear bearing and oil slinger.

HINT: Assemble the spacer and oil seal after adjusting the teeth contact pattern.

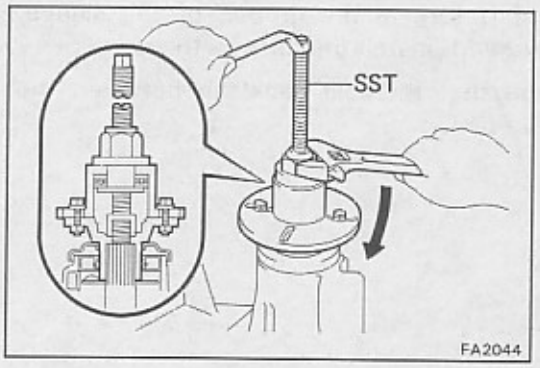

(b) Using SST, install the companion flange.

SST 09557-22022 (09557-22050)

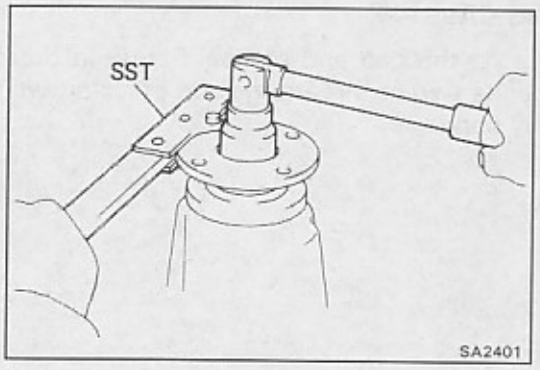

(c) Adjust the drive pinion preload by tightening the plate washer and companion flange nut.

HINT: Using SST to hold the flange, tighten the nut.

SST 09330-00021

NOTICE: As there is no spacer, tighten the nut a little at a time, being careful not to overtightenit.

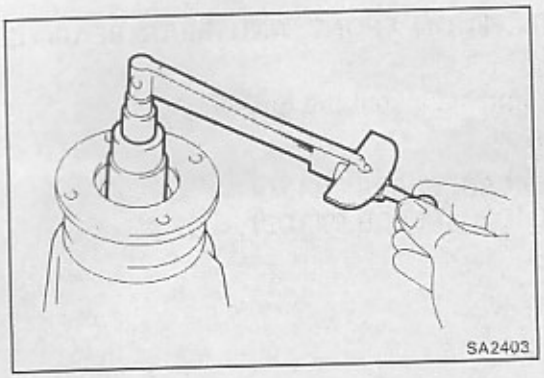

(d) Using a torque meter, measure the preload.

Preload (at starting):

New bearing	Reused bearing
10 – 16 kg-cm (8.7 – 13.9 in.-lb. / 0.9 – 1.6 N·m)	5 – 8 kg-cm (4.3 – 6.9 in.-lb. / 0.5 – 0.8 N·m)

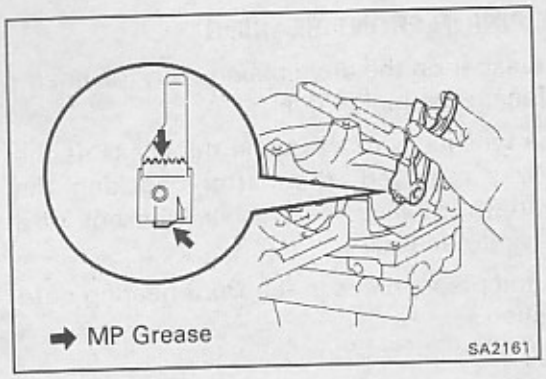

7. INSTALL DIFFERENTIAL CASE AND ADJUSTING NUTS

(a) Apply MP grease on the rack of the shift fork and connecting part of the indicator switch.

(b) Insert the shift the fork into the differential carrier as shown.

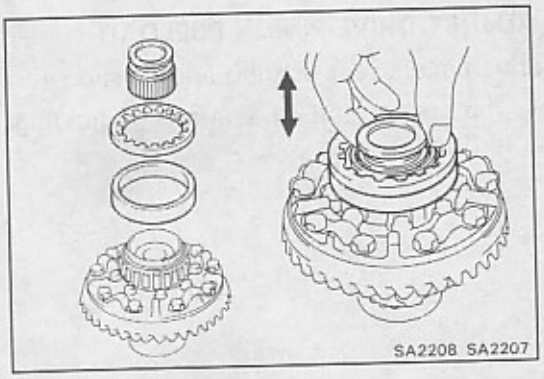

(c) Install the both bearing outer races, adjusting nuts and sleeve to the differential case.

HINT: Check that the sleeve moves smoothly.

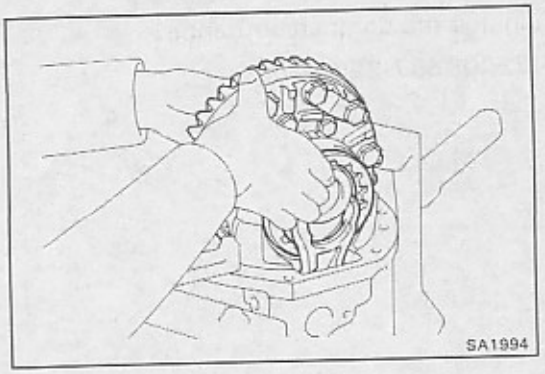

(d) Install the shift fork in the groove of the sleeve, holding it by hand, install the case in the carrier.

HINT: Make sure that there is backlash between the ring gear and drive pinion.

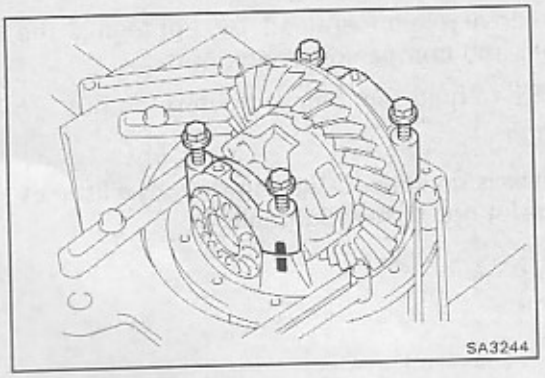

8. INSTALL BEARING CAPS

Align matchmarks on the cap and carrier. Screw in the two bearing cap bolts two or three turns and press down the bearing cap by hand.

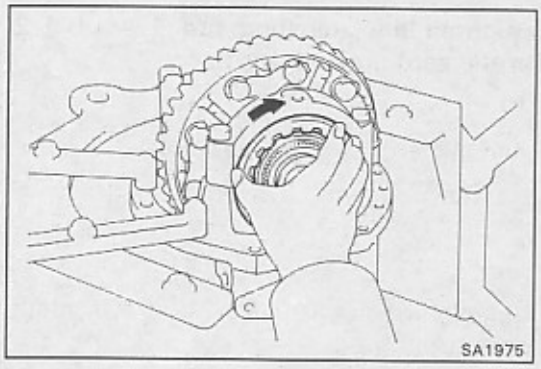

HINT: If the bearing cap does not fit tightly on the carrier, the adjusting nuts are not threaded properly. Reinstall the adjusting nuts if necessary.

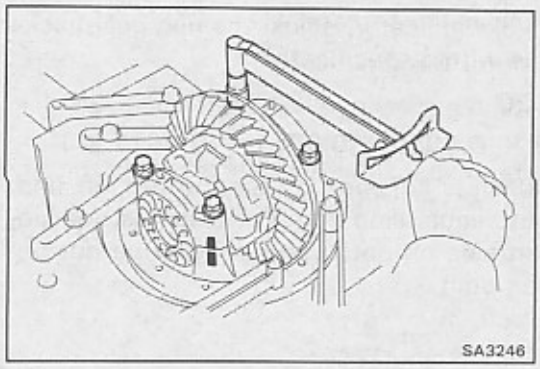

9. ADJUST SIDE BEARING PRELOAD

(a) Tighten the four bearing cap bolts to the specified torque, then loosen them to the point where they con be turned by hand.

Torque: 800 kg-cm (58 ft-lb, 78 N·m)

(b) Fully tighten the four bearing cap bolts by hand.

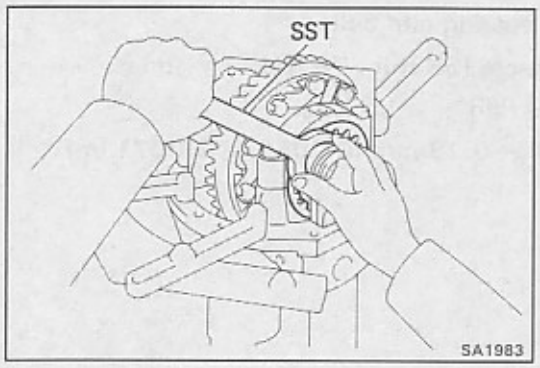

(c) Using SST, tighten the adjusting nut on the ring gear side until the ring gear has a backlash of about 0.2 mm (0.008 in.).

SST 09616-30020

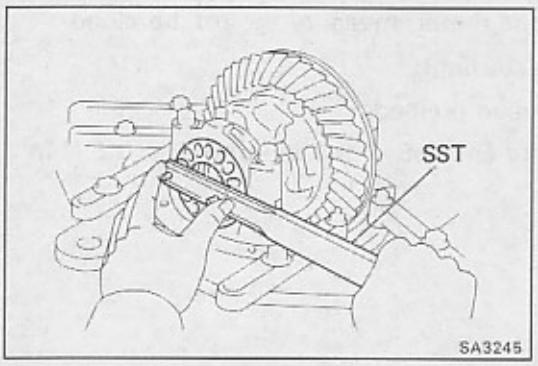

(d) While turning the ring gear, use SST to fully tighten the adjusting nut on the drive pinion side. After the bearings are settled, loosen the adjusting nut on the drive pinion side.

SST 09504-00011

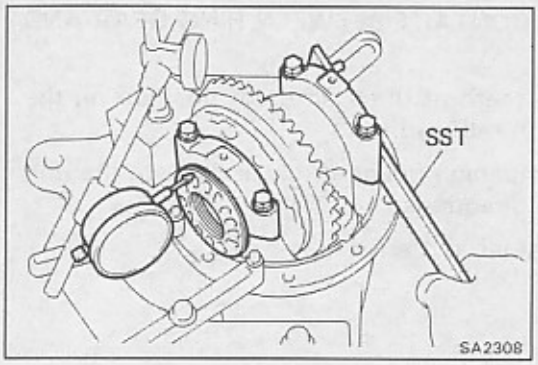

(e) Place a dial indicator on the top of the adjusting nut on the ring gear side.

(f) Using SST, adjust the side bearing for zero preload by tightening the other adjusting nut until the pointer on the indicator begins to move.

SST 09616-30020

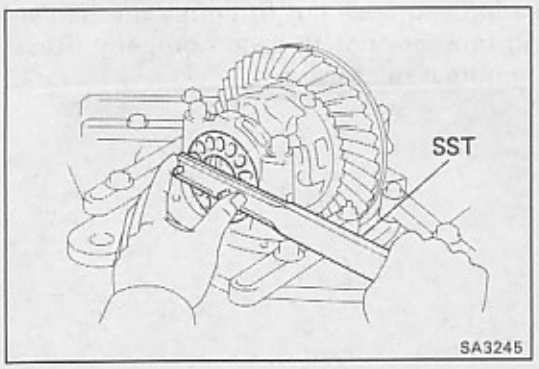

(g) Using SST, tighten the adjusting nut 1 — 1 1/2 notches from the zero preload position.

SST 09504-00011

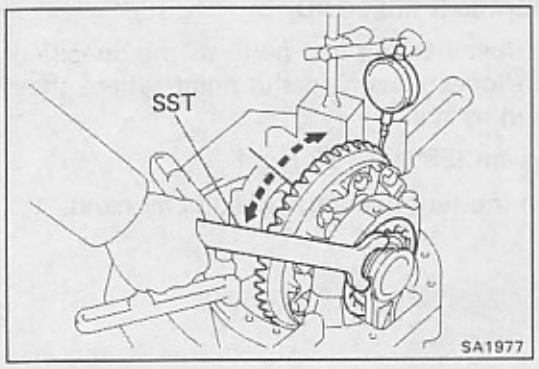

(h) Using SST a dial indicator, adjust the ring gear backlash until it is within specification.

SST 09616-30020

Backlash: 0.13 — 0.18 mm (0.0051 — 0.0071 in.)

HINT: The backlash is adjusted by turning the left and right adjusting nuts equal amounts. For example, loosen the nut on the left side on notch and tighten the nut on the right side one notch.

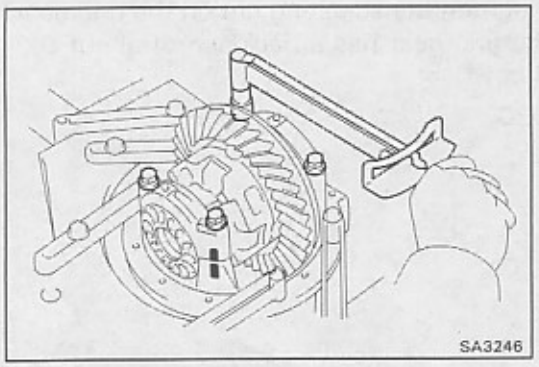

(i) Torque the bearing cap bolts.

Torque: 800 kg-cm (58 ft-lb, 78 N·m)

(j) Recheck the ring gear backlash.

Backlash: 0.13 — 0.18 mm (0.0051 — 0.0071 in.)

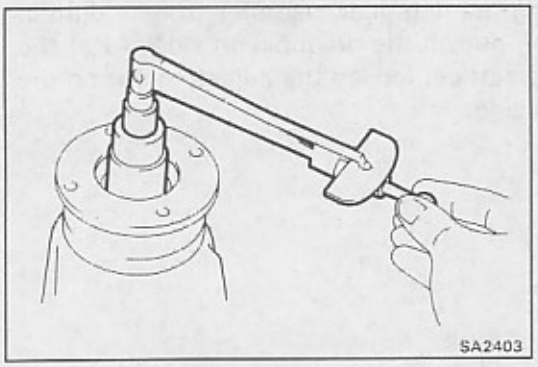

(k) Using a torque meter, measure the total preload.

Total preload (at starting):

Add drive pinion preload

4 — 6 kg-cm (3.5 — 5.2 in.-lb, 0.4 — 0.6 N·m)

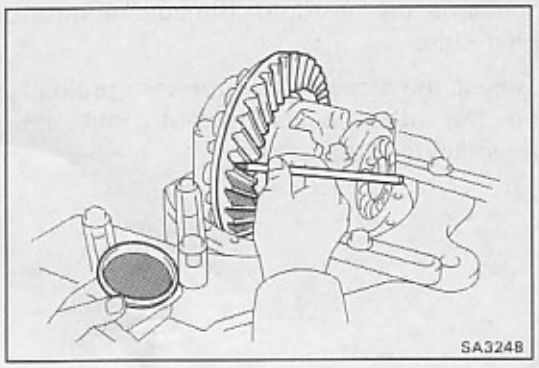

10. INSPECT TEETH CONTACT BETWEEN RING GEAR AND DRIVE PINION

(a) Coat 3 or 4 teeth at three different position on the ring gear with red lead.

(b) Hold the companion flange firmly and rotate the ring gear in both directions.

(c) Inspect the teeth pattern.

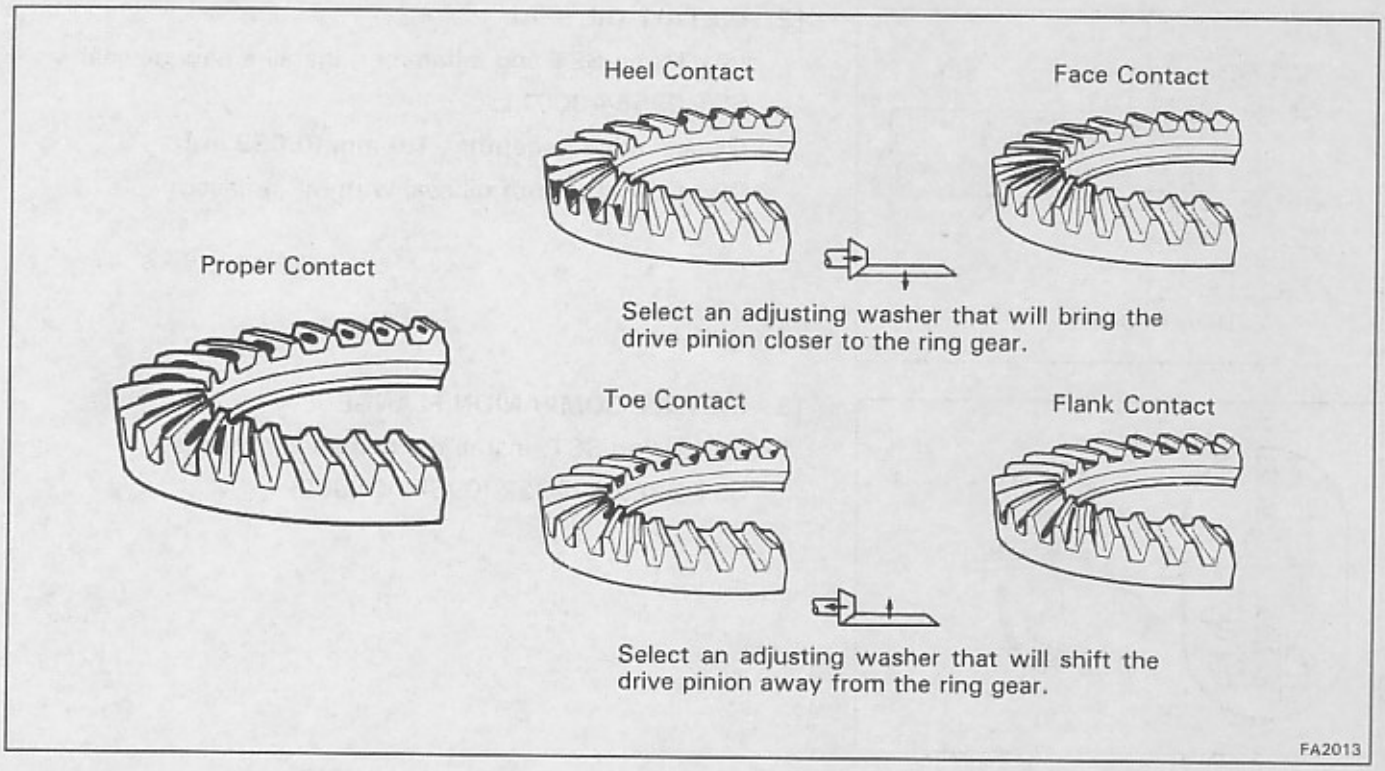

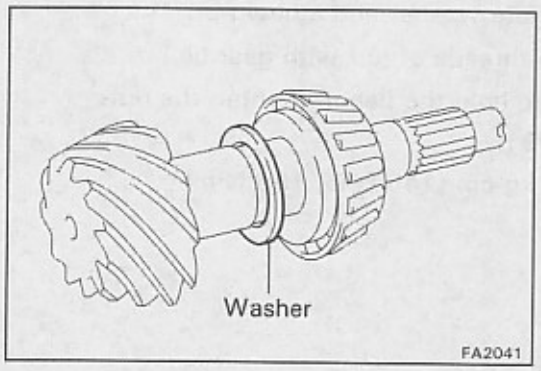

If the teeth are not contacting properly, use the following chart to select a proper washer for correction.

HINT: In the case of face contact or flank contact, it may be possible to make the adjustment within the backlash specification limits.

Washer thickness mm (in.)	
1.70 (0.0669)	2.03 (0.0799)
1.73 (0.0681)	2.06 (0.0811)
1.76 (0.0693)	2.09 (0.0823)
1.79 (0.0705)	2.12 (0.0835)
1.82 (0.0717)	2.15 (0.0846)
1.85 (0.0728)	2.18 (0.0858)
1.88 (0.0740)	2.21 (0.0870)
1.91 (0.0752)	2.24 (0.0882)
1.94 (0.0764)	2.27 (0.0894)
1.97 (0.0776)	2.30 (0.0906)
2.00 (0.0787)	2.33 (0.0917)

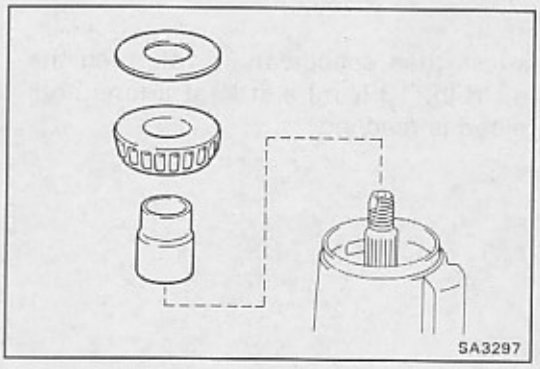

11. INSTALL NEW BEARING SPACER

(a) Remove the companion flange. (See page SA-13)

(b) Remove the oil slinger and rear bearing. (See page SA-13)

(c) Install a new bearing spacer.

(d) Install the rear bearing and oil slinger.

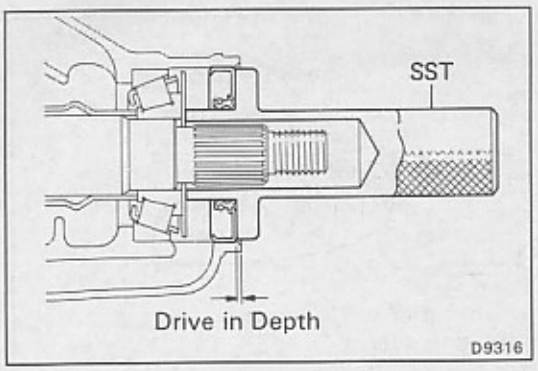

12. INSTALL OIL SEAL

(a) Using SST and a hammer, install a new oil seal.

SST 09554-30011

Oil seal drive in depth: 1.0 mm (0.039 in.)

(b) Coat the lip of oil seal with MP grease.

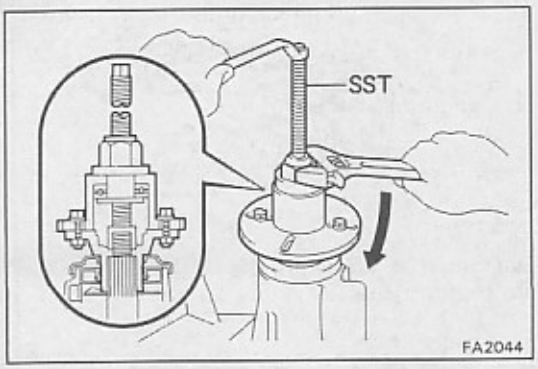

13. INSTALL COMPANION FLANGE

(a) Using SST, install the companion flange.

SST 09557-22022 (09557-22052)

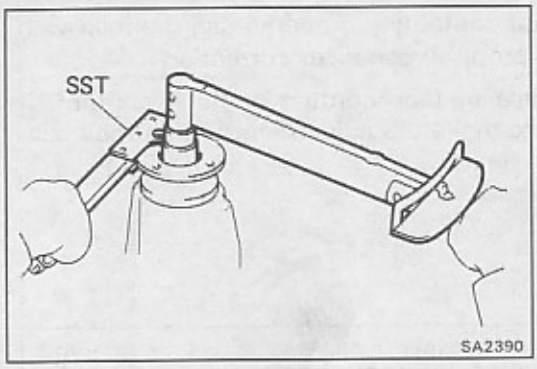

(b) Install the plate washer and a new nut.

HINT: Coat the threads of nut with gear oil.

(c) Using SST to hold the flange, tighten the nut.

SST 09330-00021

Torque: 2,000 kg-cm (145 ft-lb, 196 N·m)

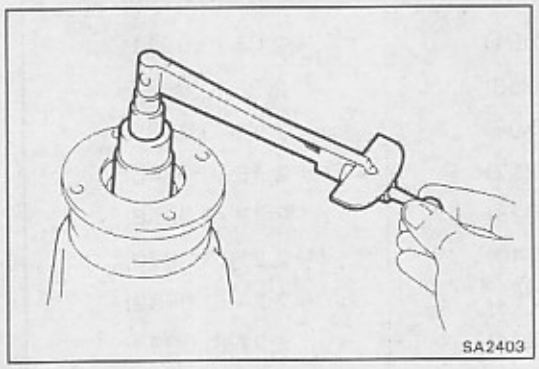

14. ADJUST DRIVE PINION PRELOAD

Using a torque meter, measure the preload of the backlash between the drive pinion and ring gear.

Preload (at starting):

New bearing	Reused bearing
10 – 16 kg-cm (8.7 – 13.9 in.-lb 0.9 – 1.6 N·m)	5 – 8 kg-cm (4.3 – 6.9 in.-lb 0.5 – 0.8 N·m)

- If the preload is greater than specification, replace the bearing spacer.
- If the preload is less than specification, retighten the nut 130 kg-cm (9 ft-lb, 13 N·m) a little at a time until the specified preload is reached.

If the maximum torque is exceeded while retightening the nut, replace the bearing spacer and repeat the preload procedure. Do not back off the pinion nut to reduce the preload.

Maximum torque: 3,500 kg-cm (253 ft-lb, 343 N·m)

If everything is normal, coat the threads with gear oil, then repeat the above operation.

15. RECHECK RING GEAR BACKLASH
(See page SA-11)

16. RECHECK TEETH CONTACT BETWEEN RING GEAR AND DRIVE PINION
(See page SA-22)

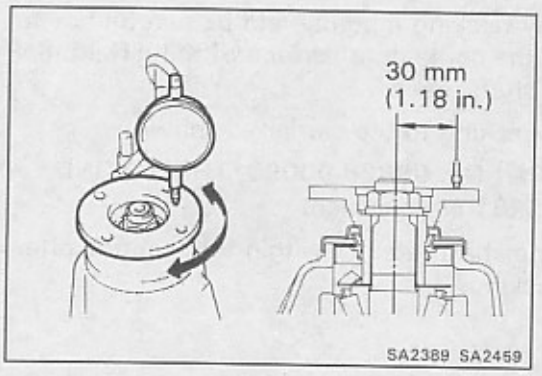

17. CHECK RUNOUT OF COMPANION FLANGE

Using a dial indicator, measure the vertical and lateral runout of the companion flange.

Maximum vertical runout: 0.10 mm (0.0039 in.)

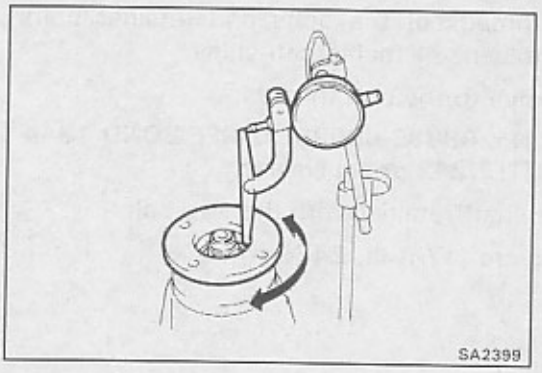

Maximum lateral runout: 0.10 mm (0.0039 in.)

If the runout is greater than the maximum, inspect the bearing.

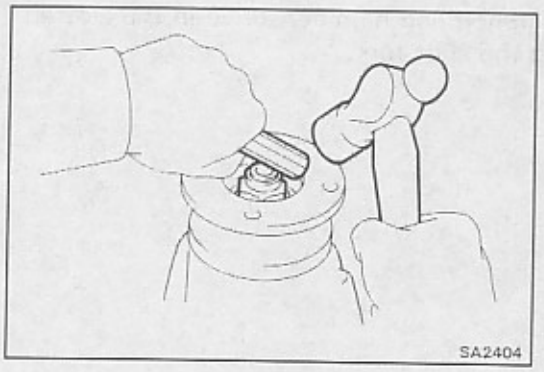

18. STAKE DRIVE PINION NUT

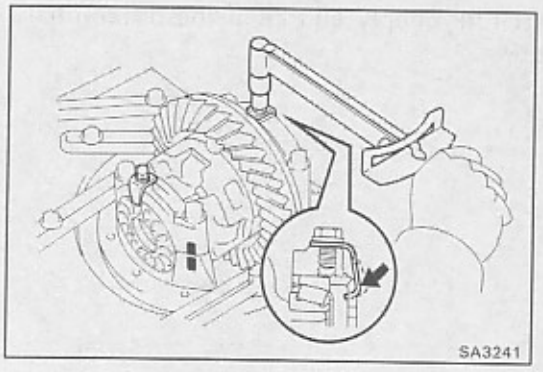

19. INSTALL ADJUSTING NUT LOCKS

(a) Install two new nut locks on the bearing caps.

Torque: 130 kg-cm (9 ft-lb, 13 N·m)

(b) After tightening the bolts, bend the nut locks.