(Cont. next page)

Air Conditioner (RHD)

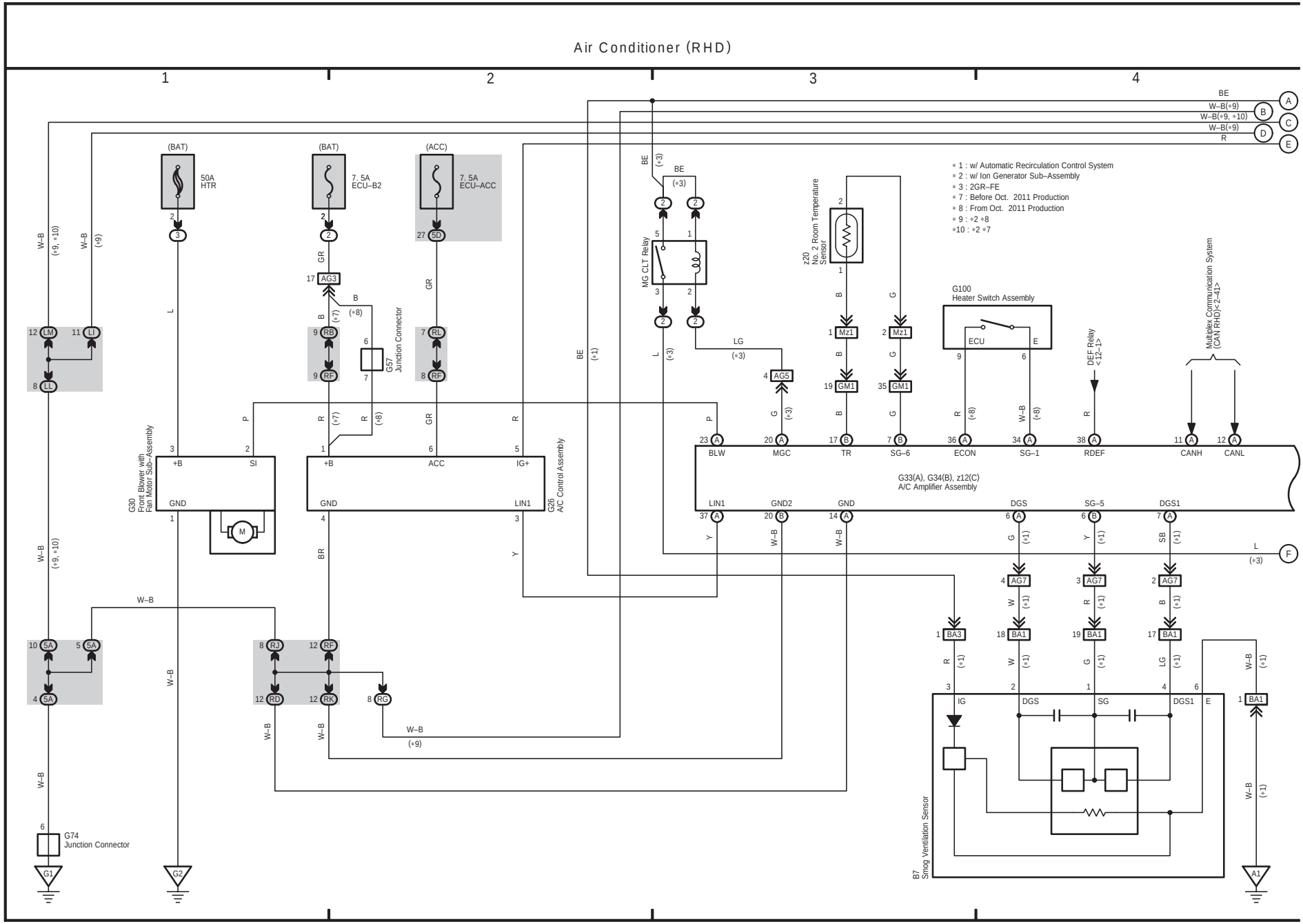

(Cont. next page)

Air Conditioner (RHD)

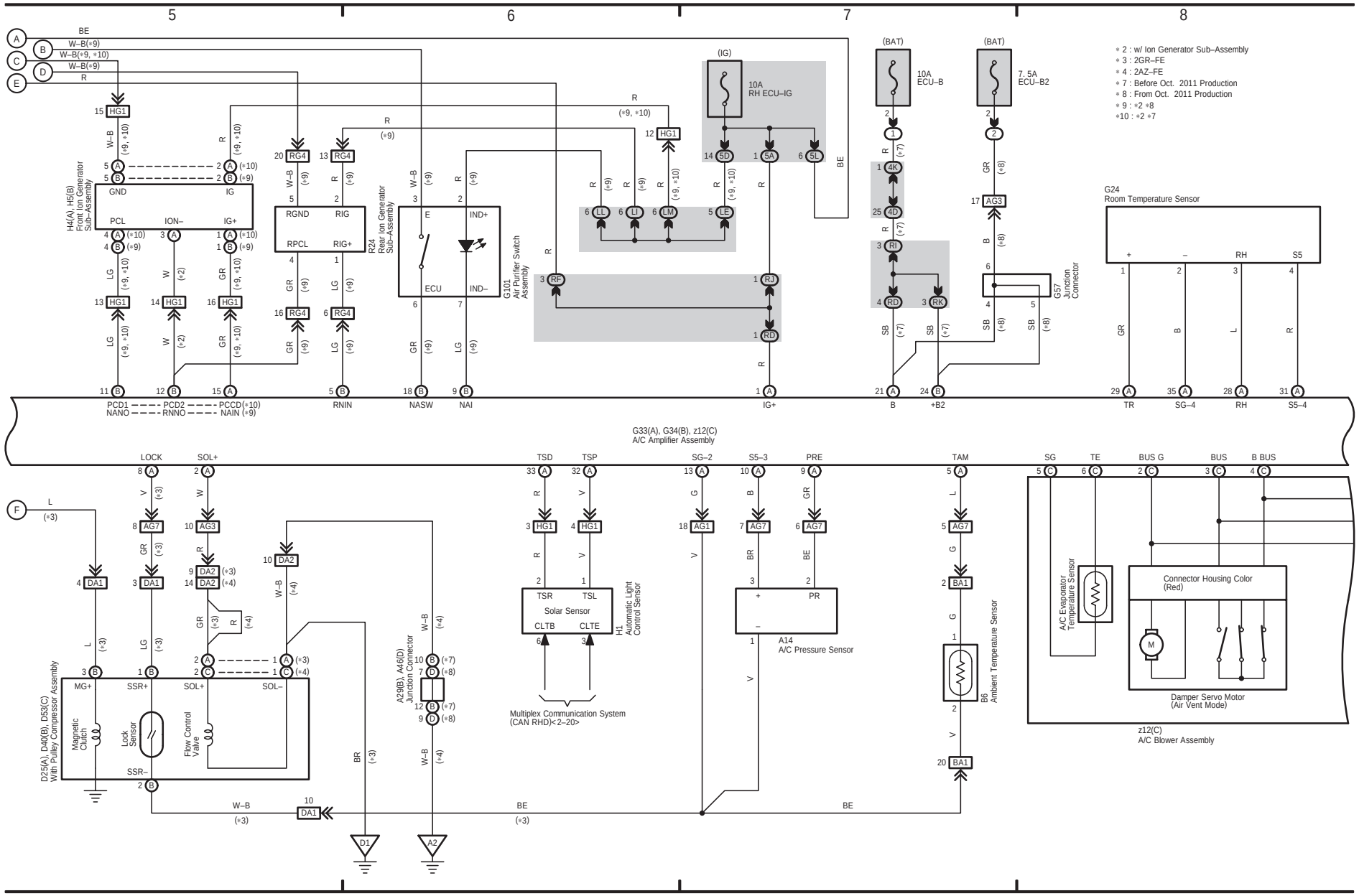

(Cont. next page)



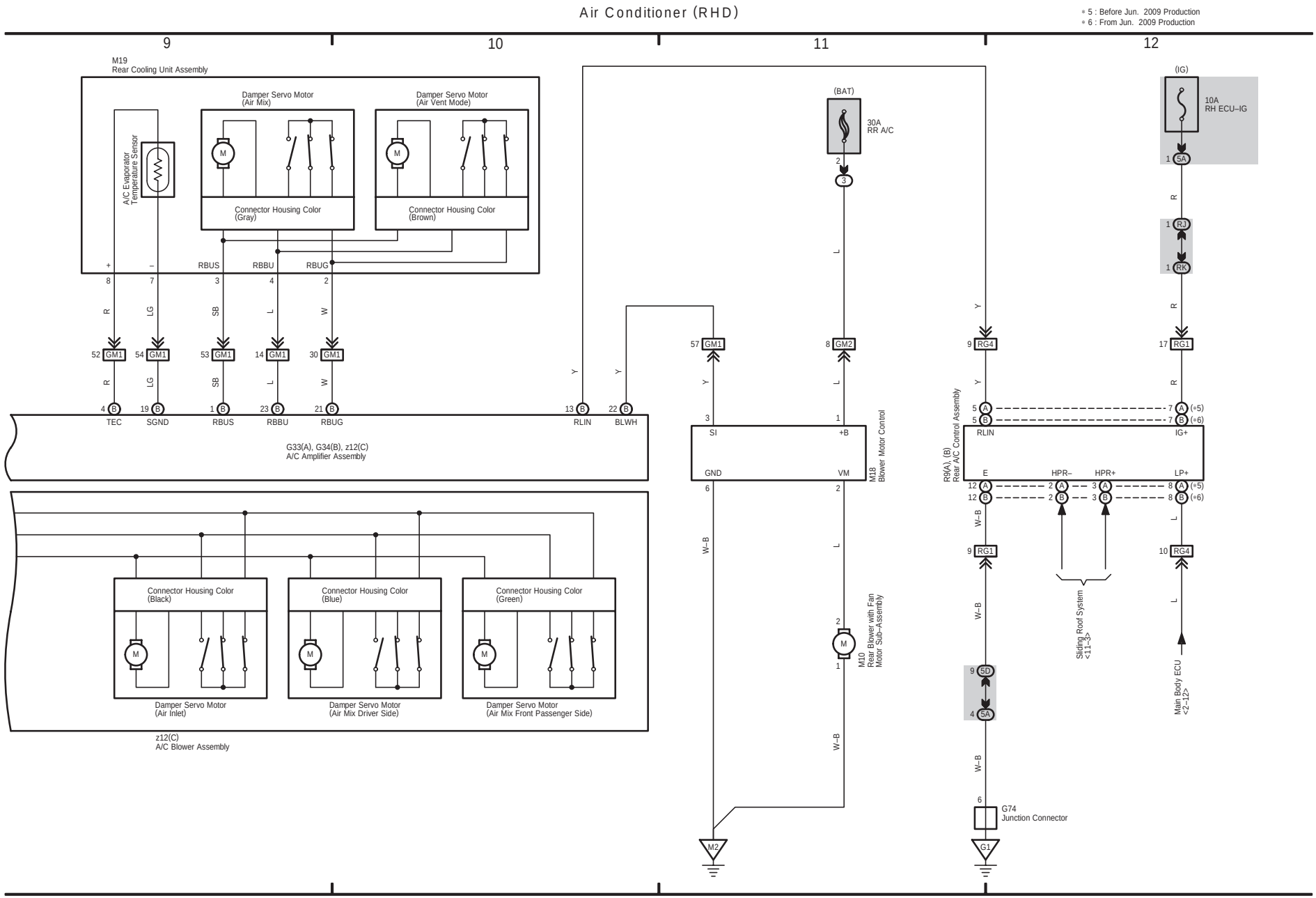

Air Conditioner (RHD)
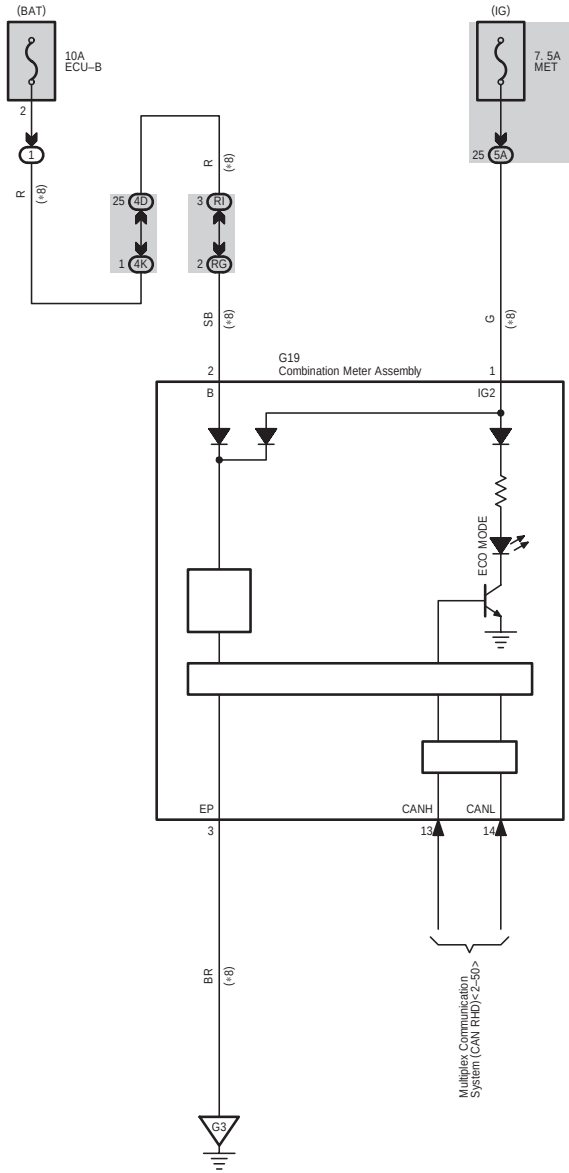
* 8 : From Oct. 2011 Production