[Driver Side J/B Assembly Inner Circuit]
(LHD)

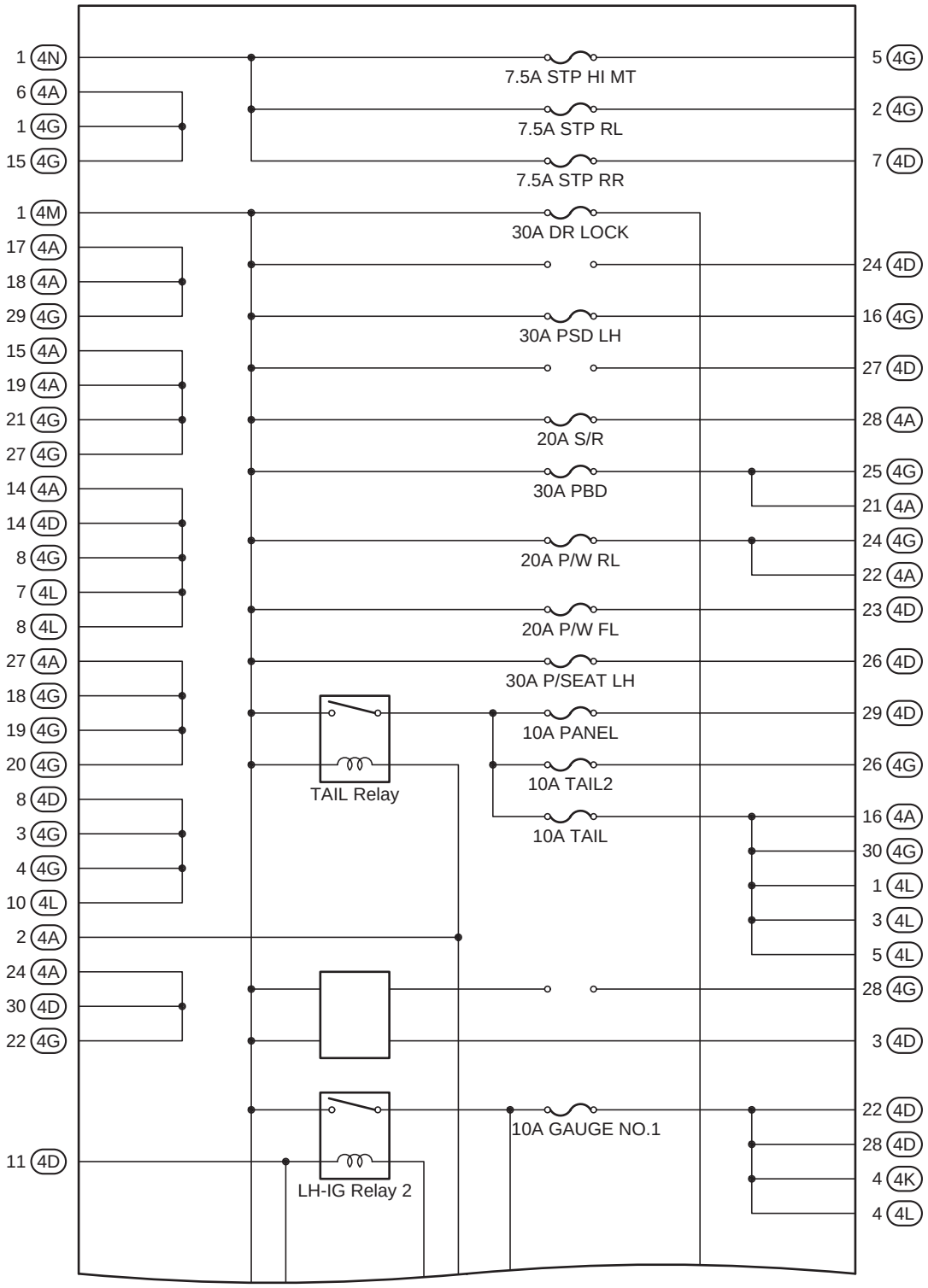

(Cont. Next Page)

(Cont'd)

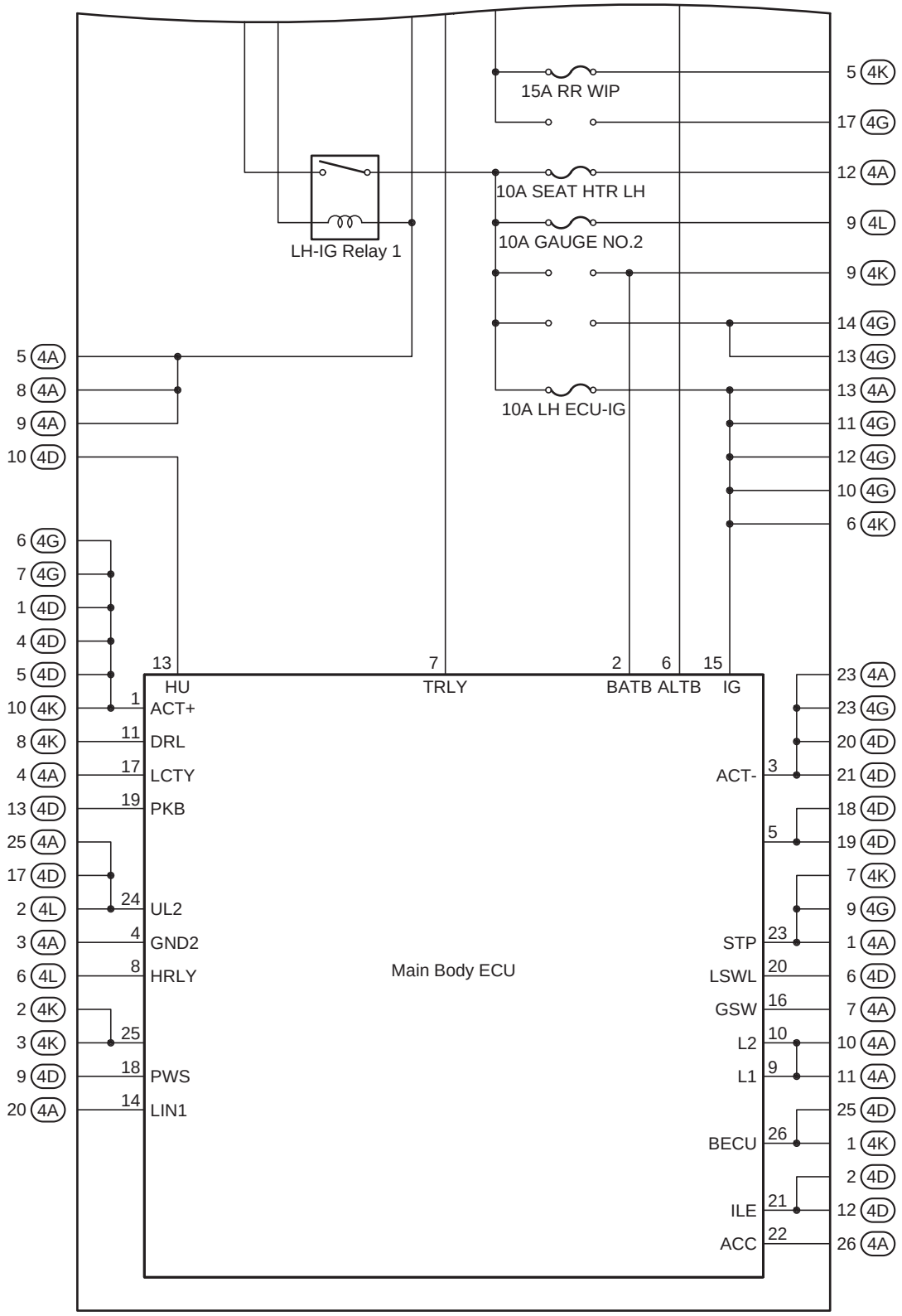
15A RR WIP
10A SEAT HTR LH
10A GAUGE NO.2
10A LH ECU-IG
LH-IG Relay 1
Main Body ECU
HU
TRLY
BATB
ALTB
IG
ACT+
DRL
LCTY
PKB
UL2
GND2
HRLY
PWS
LIN1
ACT-
STP
LSWL
GSW
L2
L1
BECU
ILE
ACC
5 4K
17 4G
12 4A
9 4L
9 4K
14 4G
13 4G
13 4A
11 4G
12 4G
10 4G
6 4K
5 4A
8 4A
9 4A
10 4D
6 4G
7 4G
1 4D
4 4D
5 4D
10 4K
8 4K
4 4A
13 4D
25 4A
17 4D
2 4L
3 4A
6 4L
2 4K
3 4K
9 4D
20 4A
23 4A
23 4G
20 4D
21 4D
18 4D
19 4D
7 4K
9 4G
1 4A
6 4D
7 4A
10 4A
11 4A
25 4D
1 4K
2 4D
12 4D
26 4A

[Passenger Side J/B Assembly Inner Circuit]
(RHD)

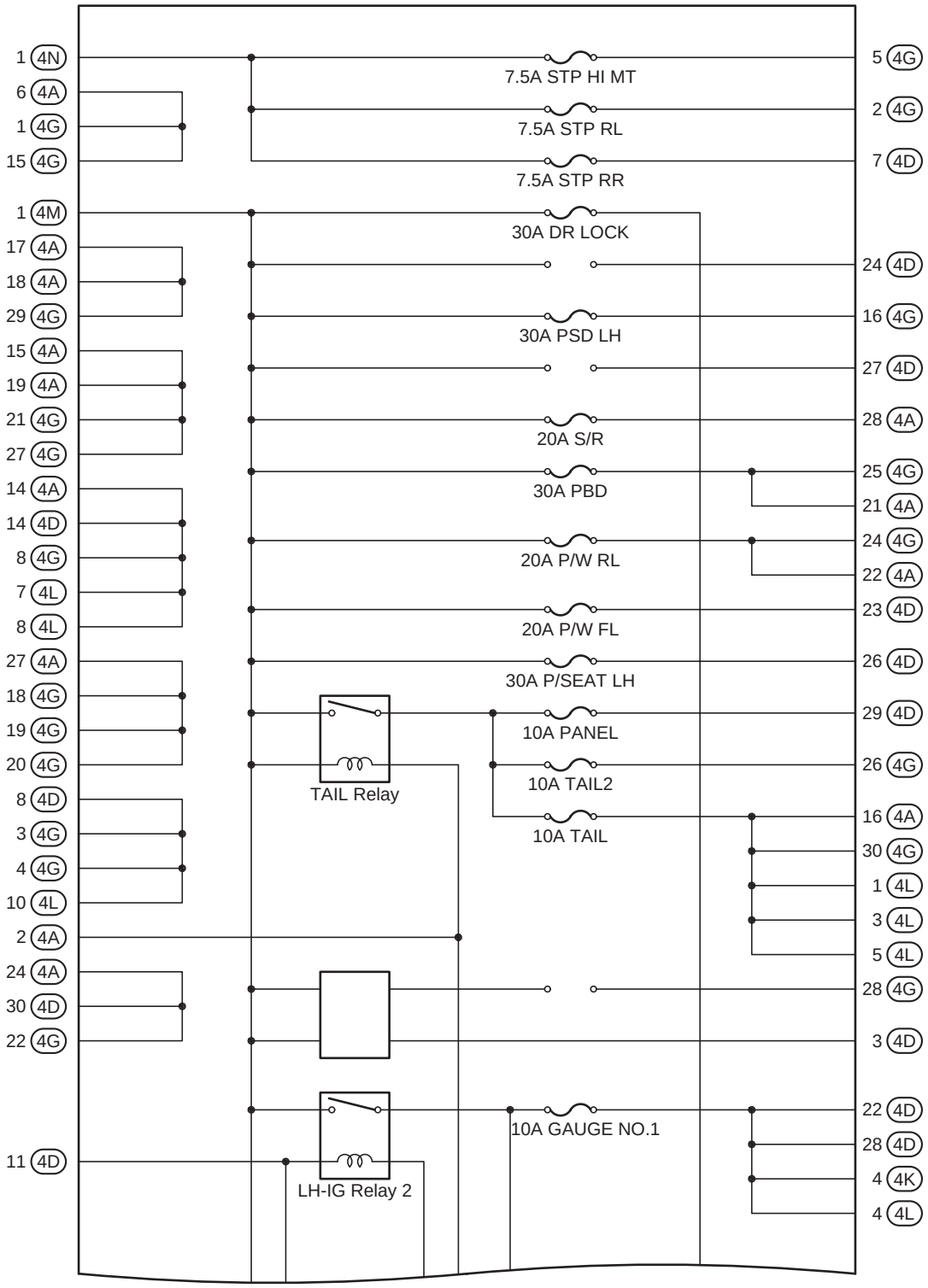

(Cont. Next Page)

(Cont'd)

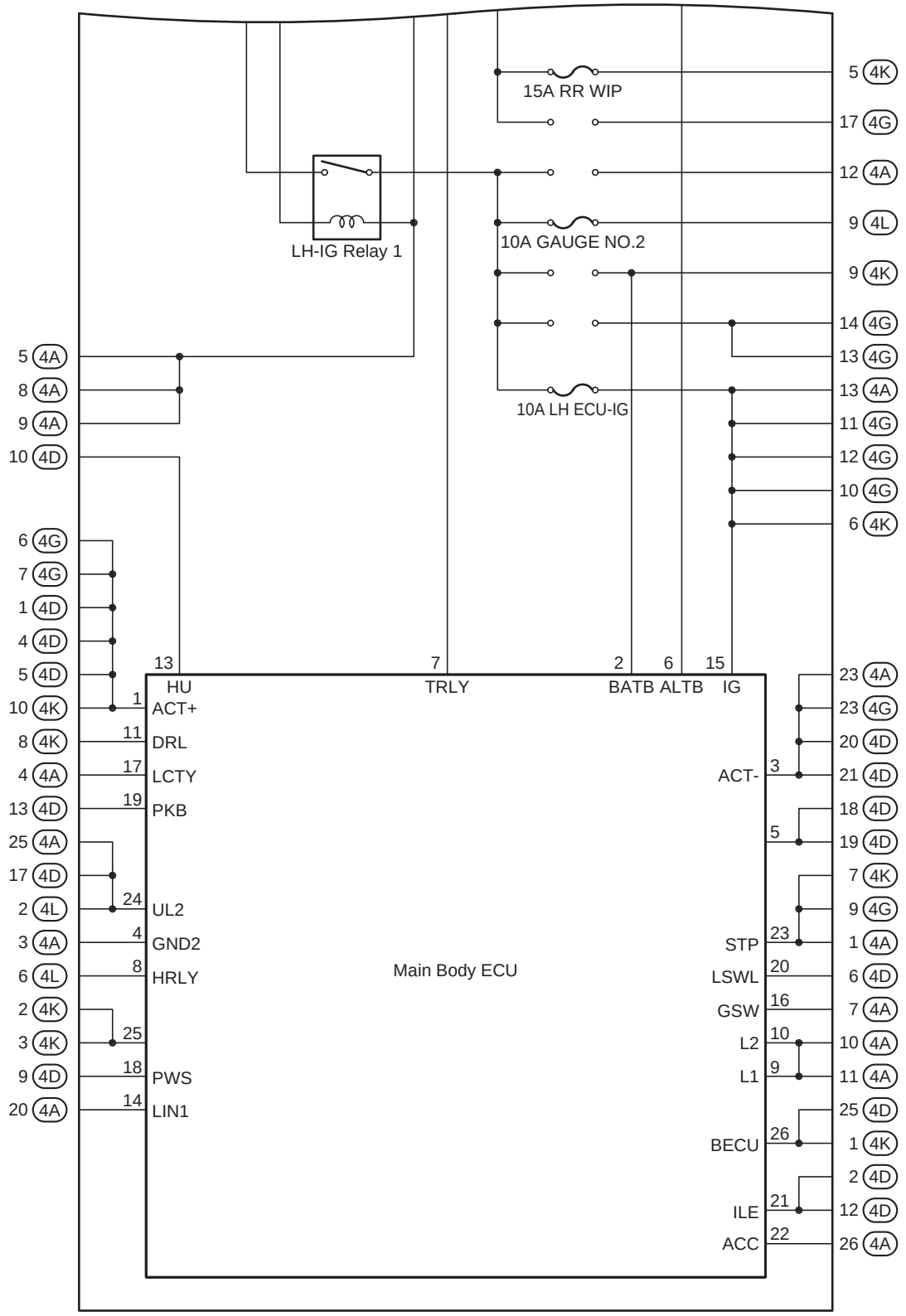
15A RR WIP
LH-IG Relay 1
10A GAUGE NO.2
10A LH ECU-IG
5 4K
17 4G
12 4A
9 4L
9 4K
14 4G
13 4G
13 4A
11 4G
12 4G
10 4G
6 4K
5 4A
8 4A
9 4A
10 4D
6 4G
7 4G
1 4D
4 4D
5 4D
10 4K
8 4K
4 4A
13 4D
25 4A
17 4D
2 4L
3 4A
6 4L
2 4K
3 4K
9 4D
20 4A
13 HU
7 TRLY
2 BATB
6 ALTB
15 IG
1 ACT+
11 DRL
17 LCTY
19 PKB
24 UL2
4 GND2
8 HRLY
25
18 PWS
14 LIN1
Main Body ECU
ACT- 3
5
STP 23
LSWL 20
GSW 16
L2 10
L1 9
BECU 26
ILE 21
ACC 22
23 4A
23 4G
20 4D
21 4D
18 4D
19 4D
7 4K
9 4G
1 4A
6 4D
7 4A
10 4A
11 4A
25 4D
1 4K
2 4D
12 4D
26 4A