## [Driver Side J/B Assembly Inner Circuit]
## (RHD)

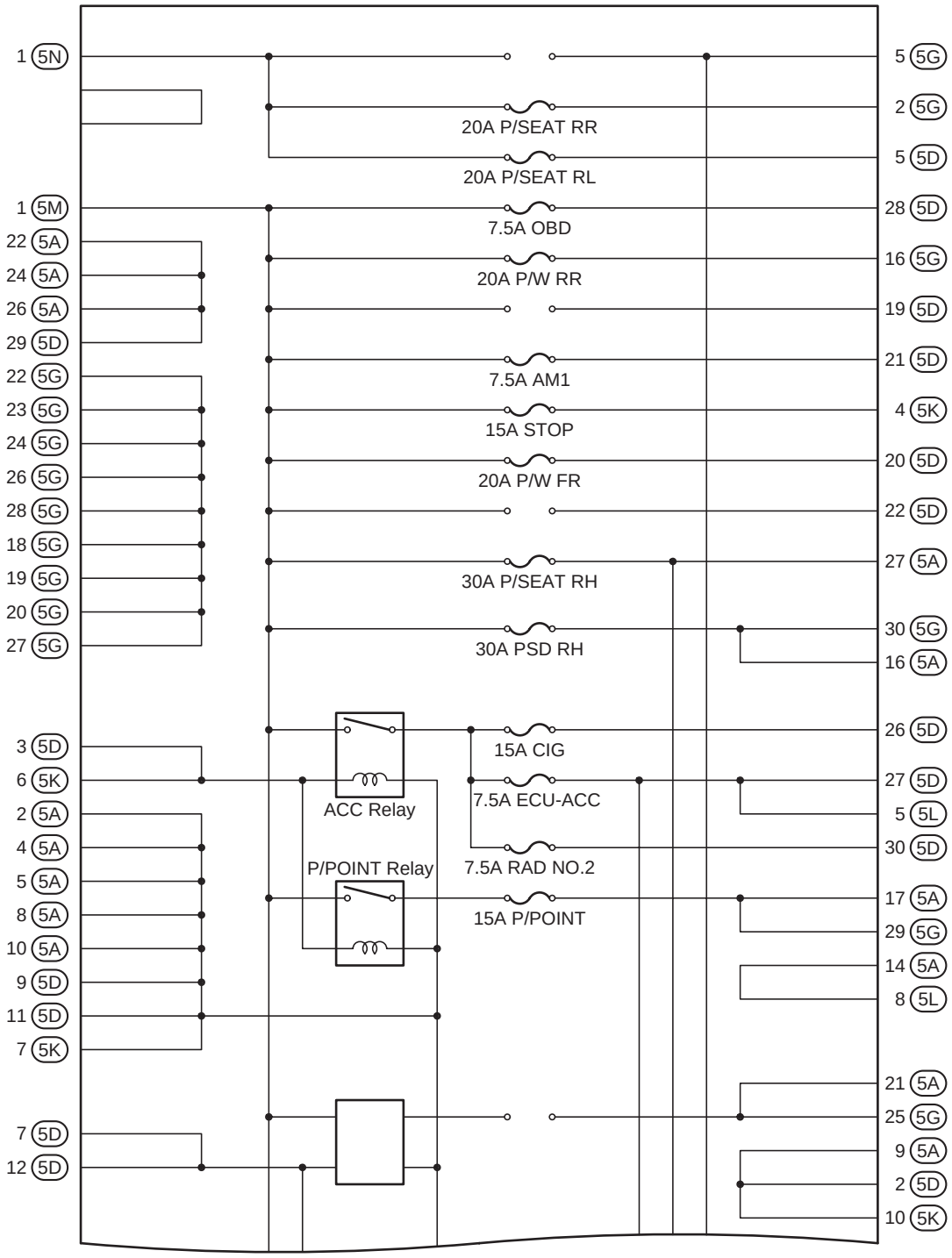


(Cont. Next Page)

(Cont'd)

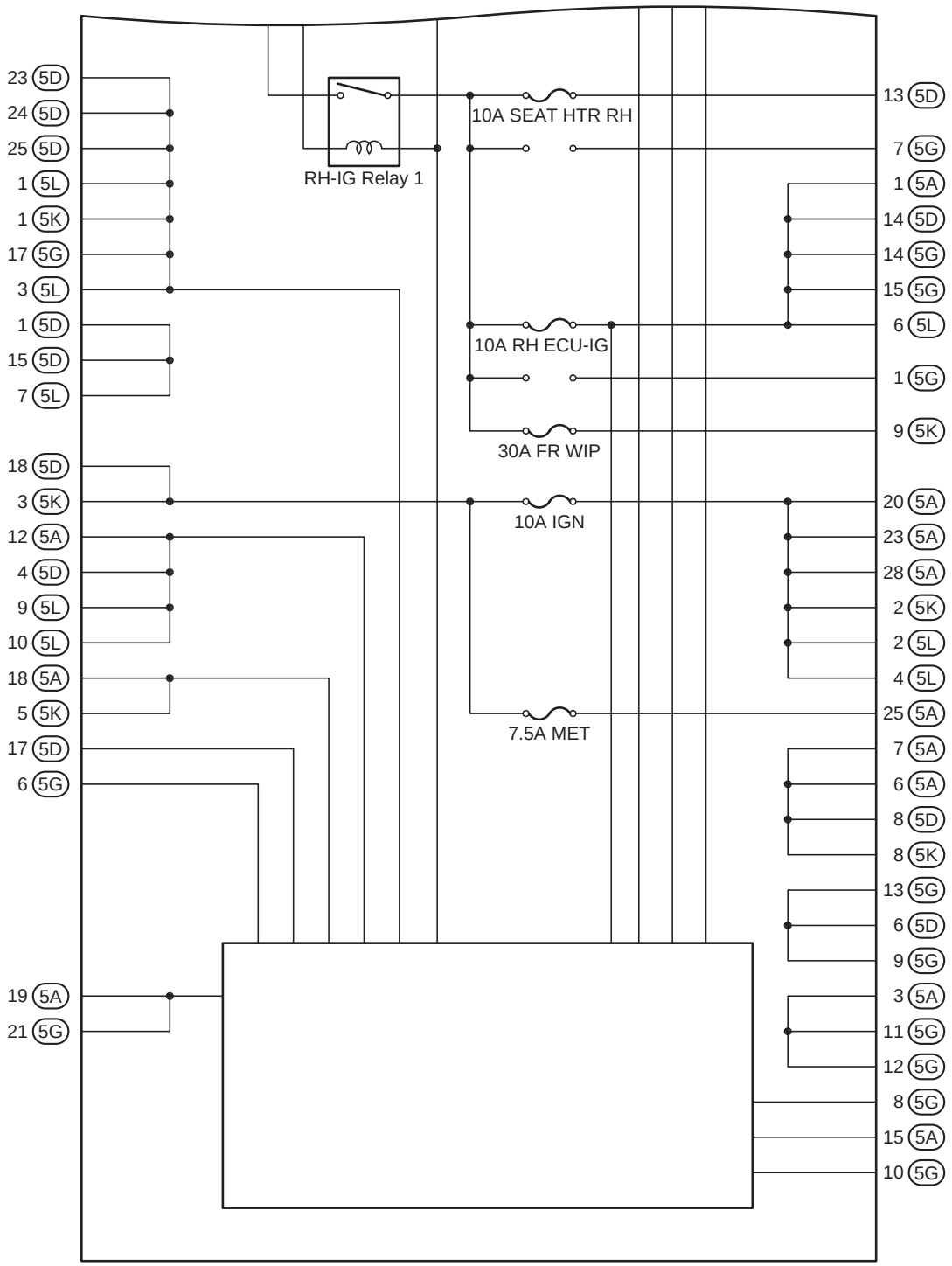
23 5D
24 5D
25 5D
1 5L
1 5K
17 5G
3 5L
1 5D
15 5D
7 5L
18 5D
3 5K
12 5A
4 5D
9 5L
10 5L
18 5A
5 5K
17 5D
6 5G
19 5A
21 5G
RH-IG Relay 1
10A SEAT HTR RH
10A RH ECU-IG
30A FR WIP
10A IGN
7.5A MET
13 5D
7 5G
1 5A
14 5D
14 5G
15 5G
6 5L
1 5G
9 5K
20 5A
23 5A
28 5A
2 5K
2 5L
4 5L
25 5A
7 5A
6 5A
8 5D
8 5K
13 5G
6 5D
9 5G
3 5A
11 5G
12 5G
8 5G
15 5A
10 5G

## [Passenger Side J/B Assembly Inner Circuit]
## (LHD)

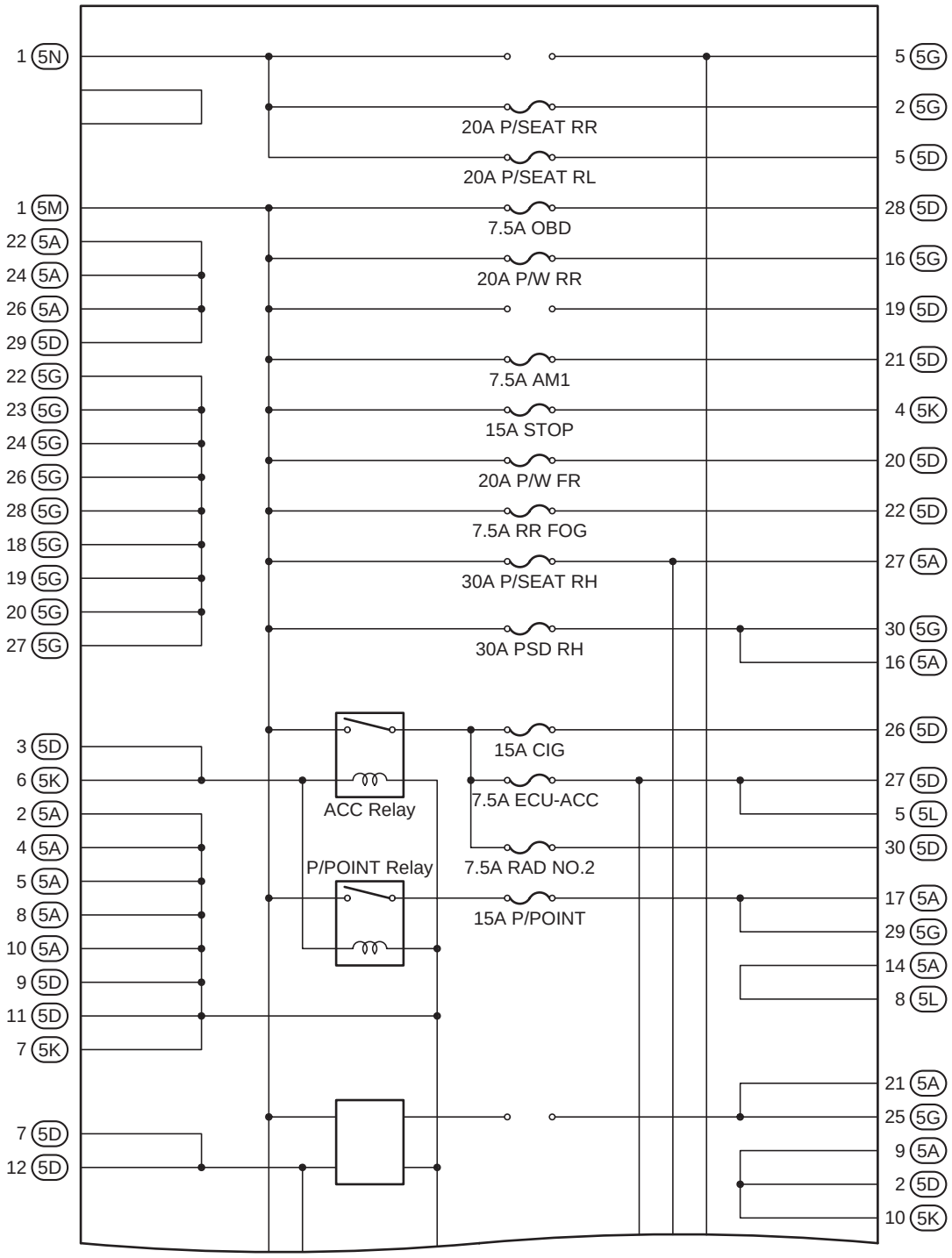


(Cont. Next Page)

(Cont'd)

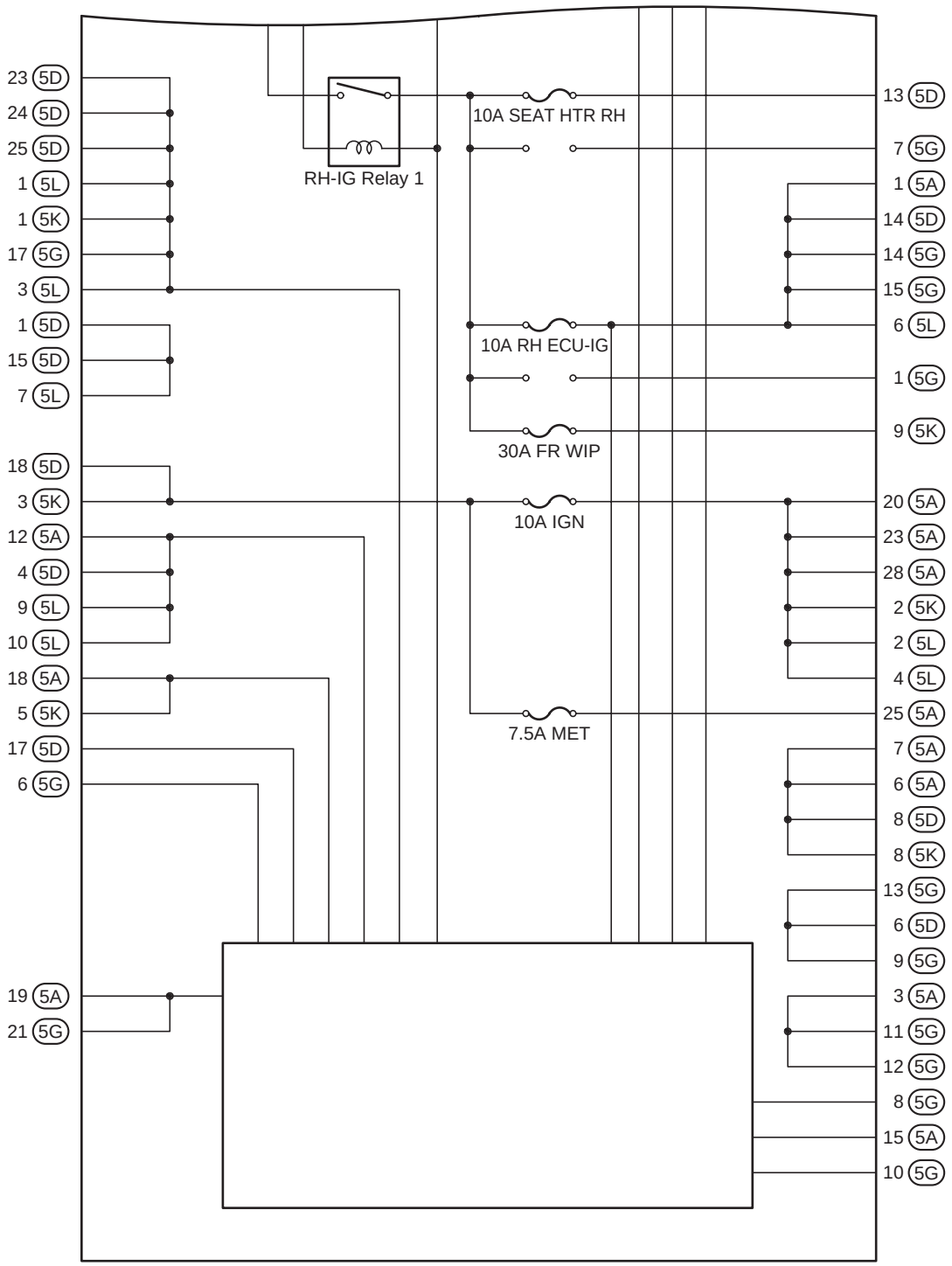
23 5D
24 5D
25 5D
1 5L
1 5K
17 5G
3 5L
1 5D
15 5D
7 5L
18 5D
3 5K
12 5A
4 5D
9 5L
10 5L
18 5A
5 5K
17 5D
6 5G
19 5A
21 5G
RH-IG Relay 1
10A SEAT HTR RH
10A RH ECU-IG
30A FR WIP
10A IGN
7.5A MET
13 5D
7 5G
1 5A
14 5D
14 5G
15 5G
6 5L
1 5G
9 5K
20 5A
23 5A
28 5A
2 5K
2 5L
4 5L
25 5A
7 5A
6 5A
8 5D
8 5K
13 5G
6 5D
9 5G
3 5A
11 5G
12 5G
8 5G
15 5A
10 5G