F RELAY LOCATIONS

: Driver Side J/B Assembly	Cowl Side Panel RH (See Page 21)

(RHD)

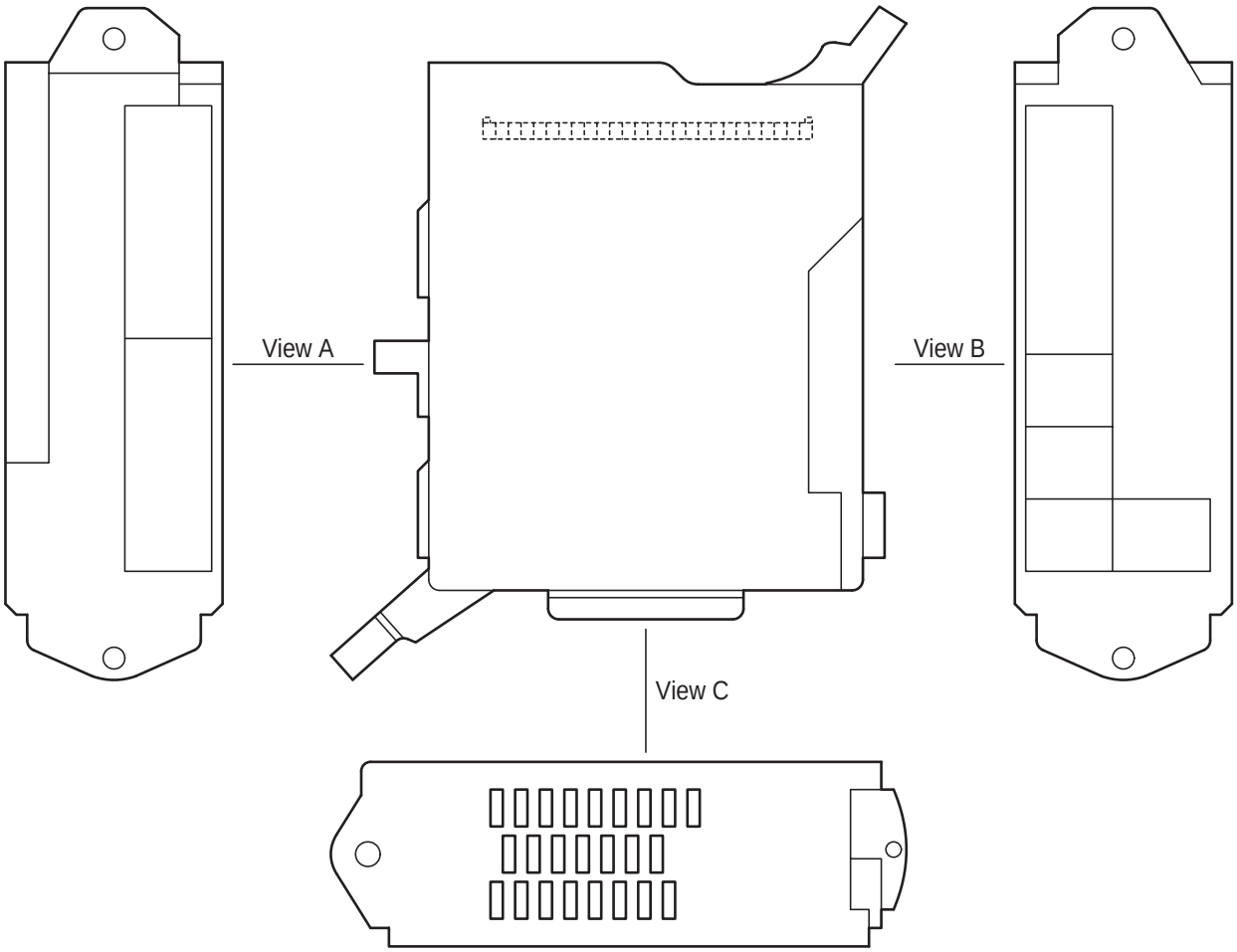

View A

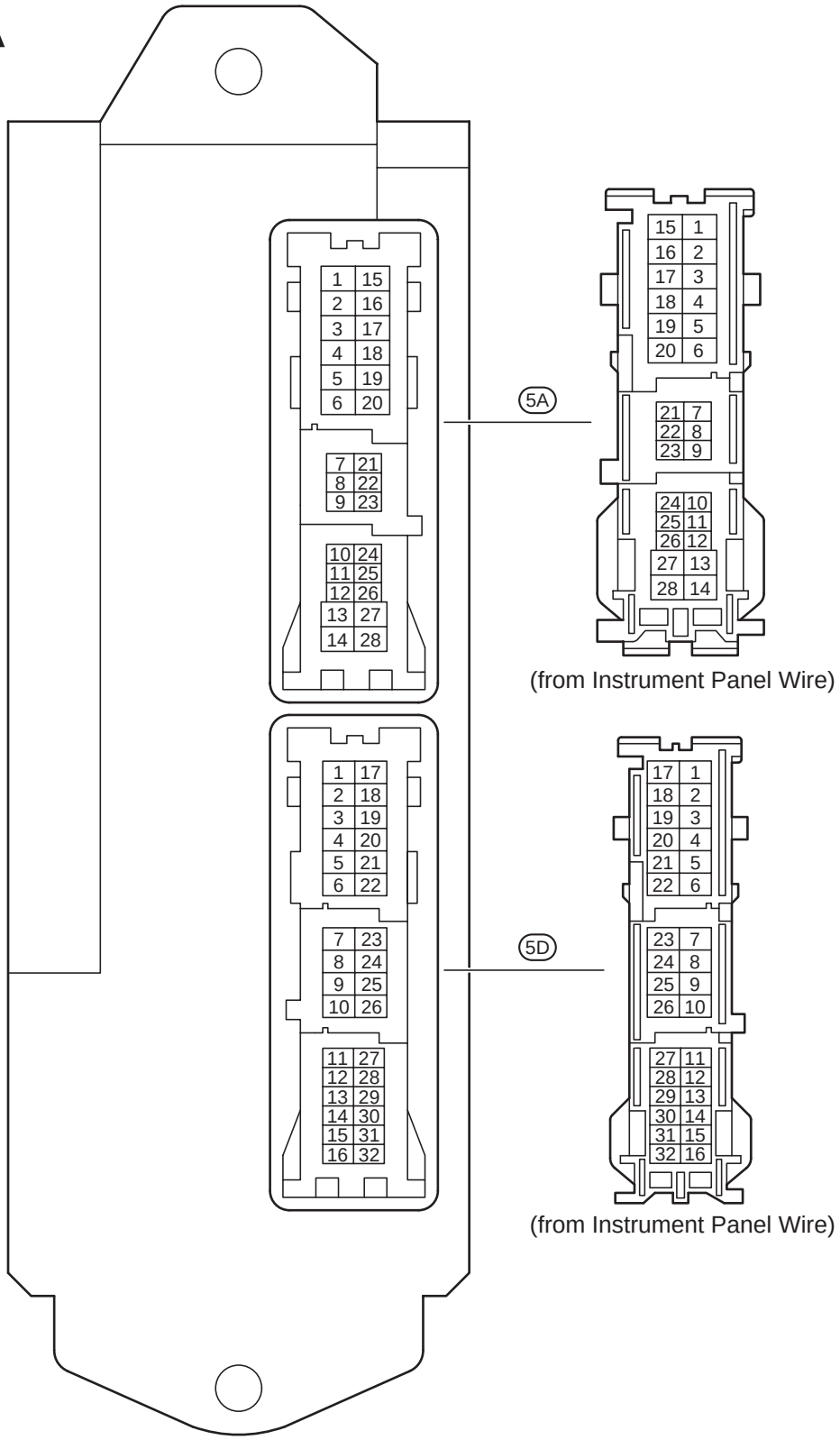
1 15
2 16
3 17
4 18
5 19
6 20
7 21
8 22
9 23
10 24
11 25
12 26
13 27
14 28
5A
15 1
16 2
17 3
18 4
19 5
20 6
21 7
22 8
23 9
24 10
25 11
26 12
27 13
28 14
(from Instrument Panel Wire)
1 17
2 18
3 19
4 20
5 21
6 22
7 23
8 24
9 25
10 26
11 27
12 28
13 29
14 30
15 31
16 32
5D
17 1
18 2
19 3
20 4
21 5
22 6
23 7
24 8
25 9
26 10
27 11
28 12
29 13
30 14
31 15
32 16
(from Instrument Panel Wire)

F RELAY LOCATIONS

: Driver Side J/B Assembly	Cowl Side Panel RH (See Page 21)

(RHD)

View B

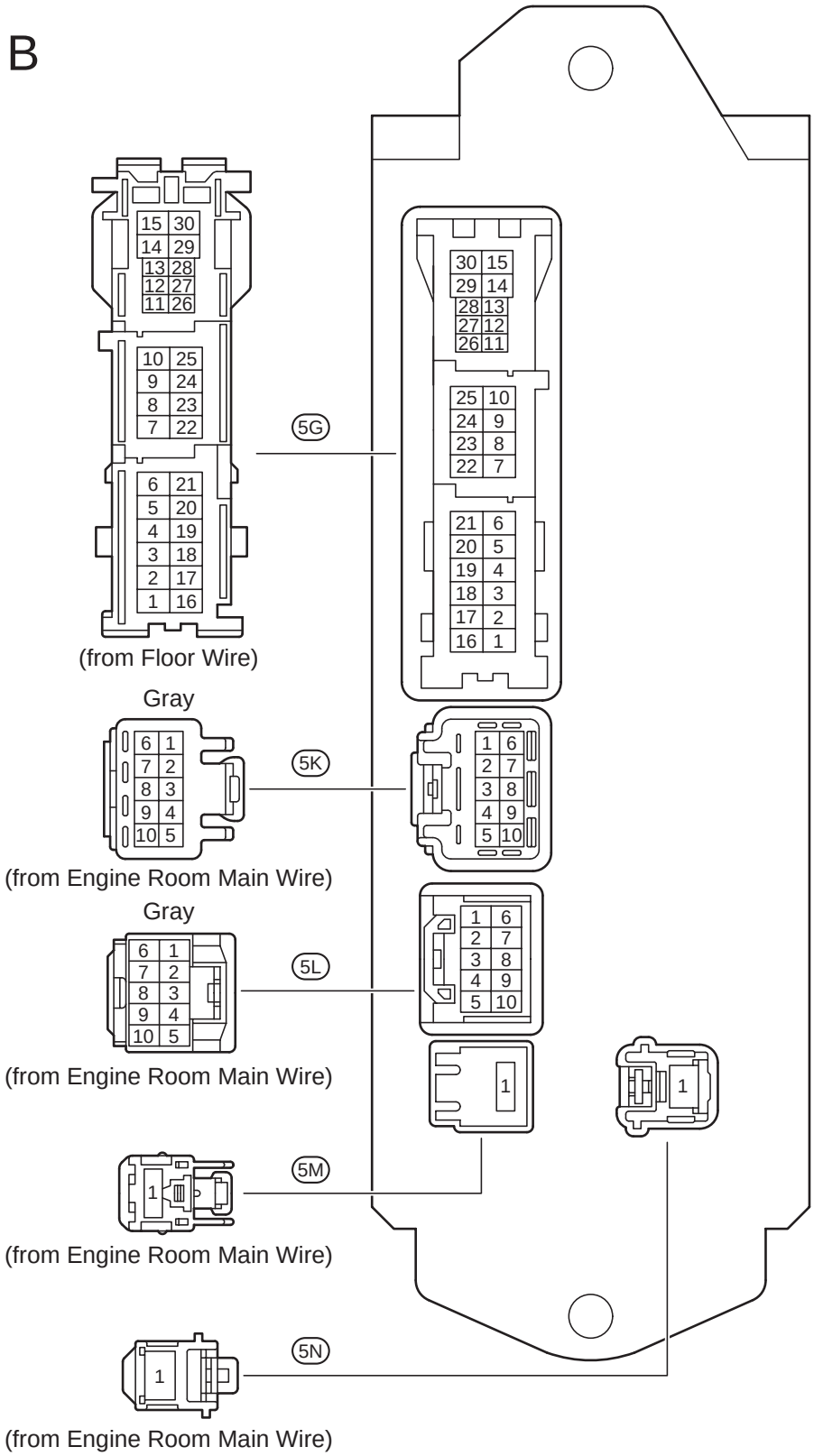

View C

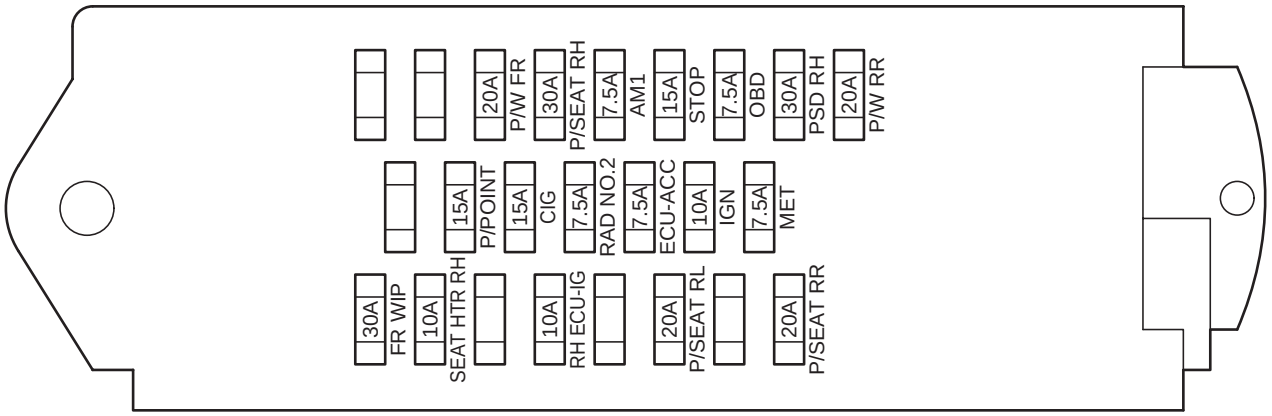
30A
FR WIP
10A
SEAT HTR RH
15A
P/POINT
20A
P/W FR
10A
RH ECU-IG
15A
CIG
30A
P/SEAT RH
7.5A
RAD NO.2
7.5A
AM1
7.5A
ECU-ACC
20A
P/SEAT RL
15A
STOP
10A
IGN
7.5A
OBD
7.5A
MET
30A
PSD RH
20A
P/SEAT RR
20A
P/W RR

F RELAY LOCATIONS

: Passenger Side J/B Assembly	Cowl Side Panel RH (See Page 21)

(LHD)

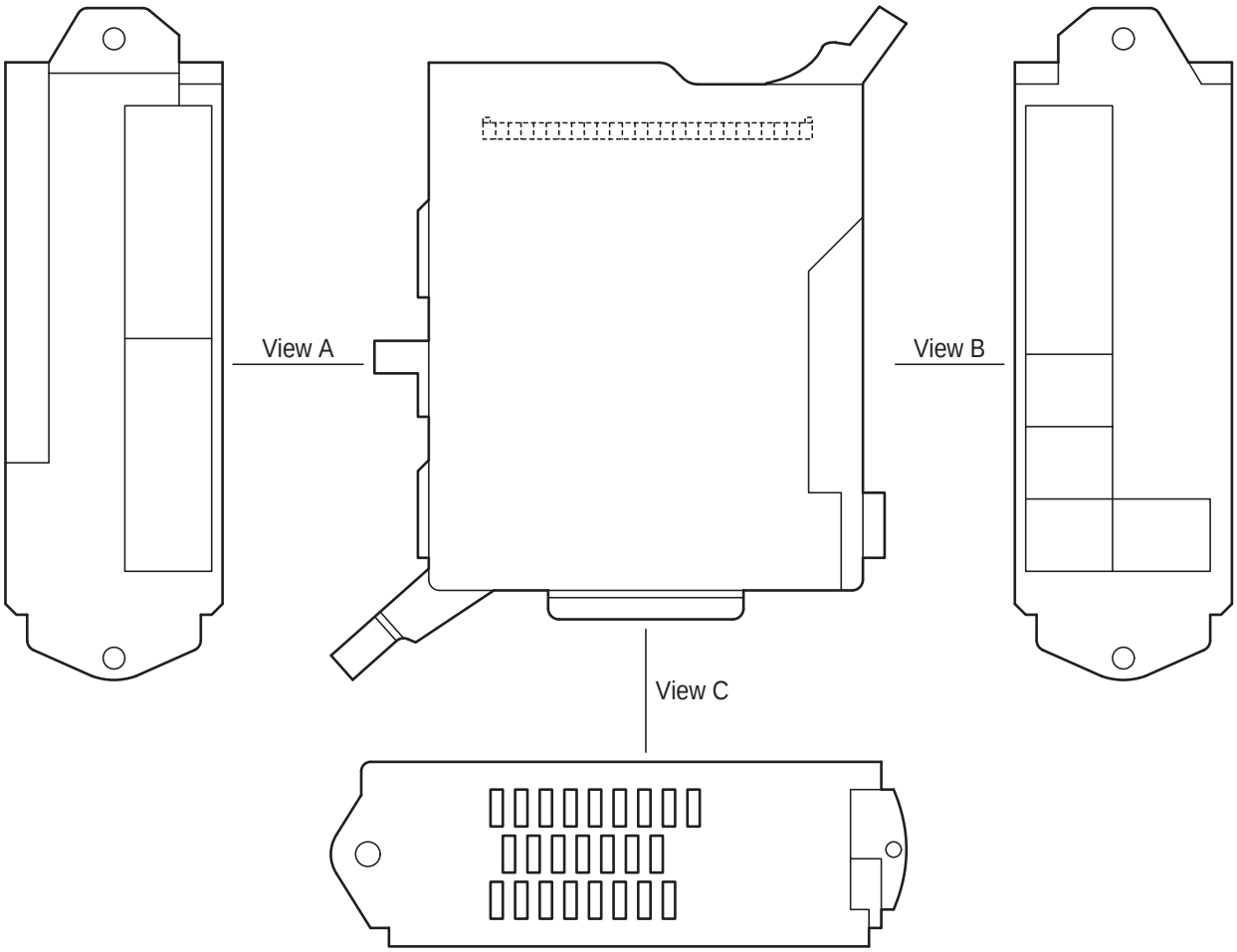

View A

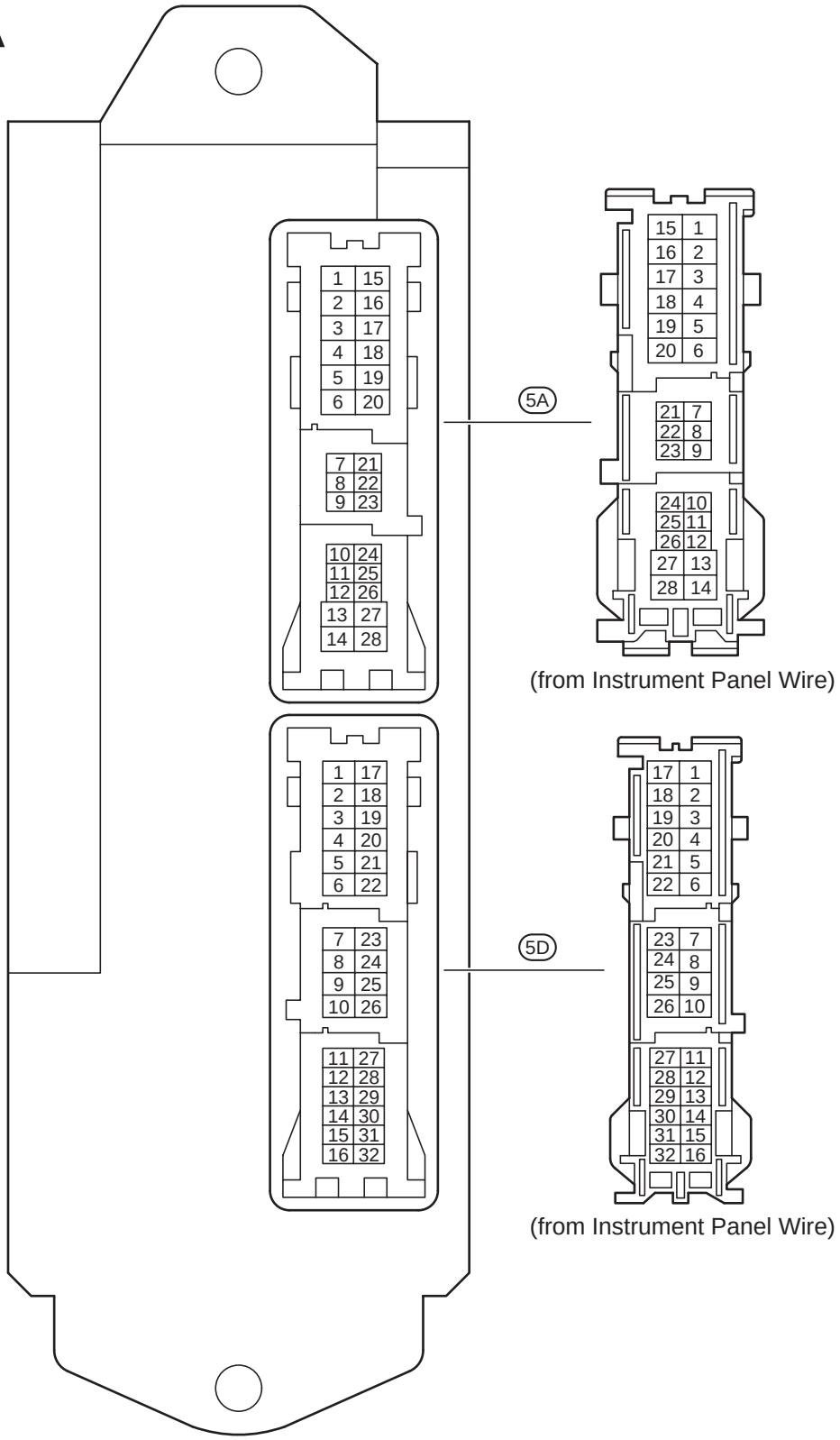
1 15
2 16
3 17
4 18
5 19
6 20
7 21
8 22
9 23
10 24
11 25
12 26
13 27
14 28
5A
15 1
16 2
17 3
18 4
19 5
20 6
21 7
22 8
23 9
24 10
25 11
26 12
27 13
28 14
(from Instrument Panel Wire)
1 17
2 18
3 19
4 20
5 21
6 22
7 23
8 24
9 25
10 26
11 27
12 28
13 29
14 30
15 31
16 32
5D
17 1
18 2
19 3
20 4
21 5
22 6
23 7
24 8
25 9
26 10
27 11
28 12
29 13
30 14
31 15
32 16
(from Instrument Panel Wire)

: Passenger Side J/B Assembly	Cowl Side Panel RH (See Page 21)

(LHD)

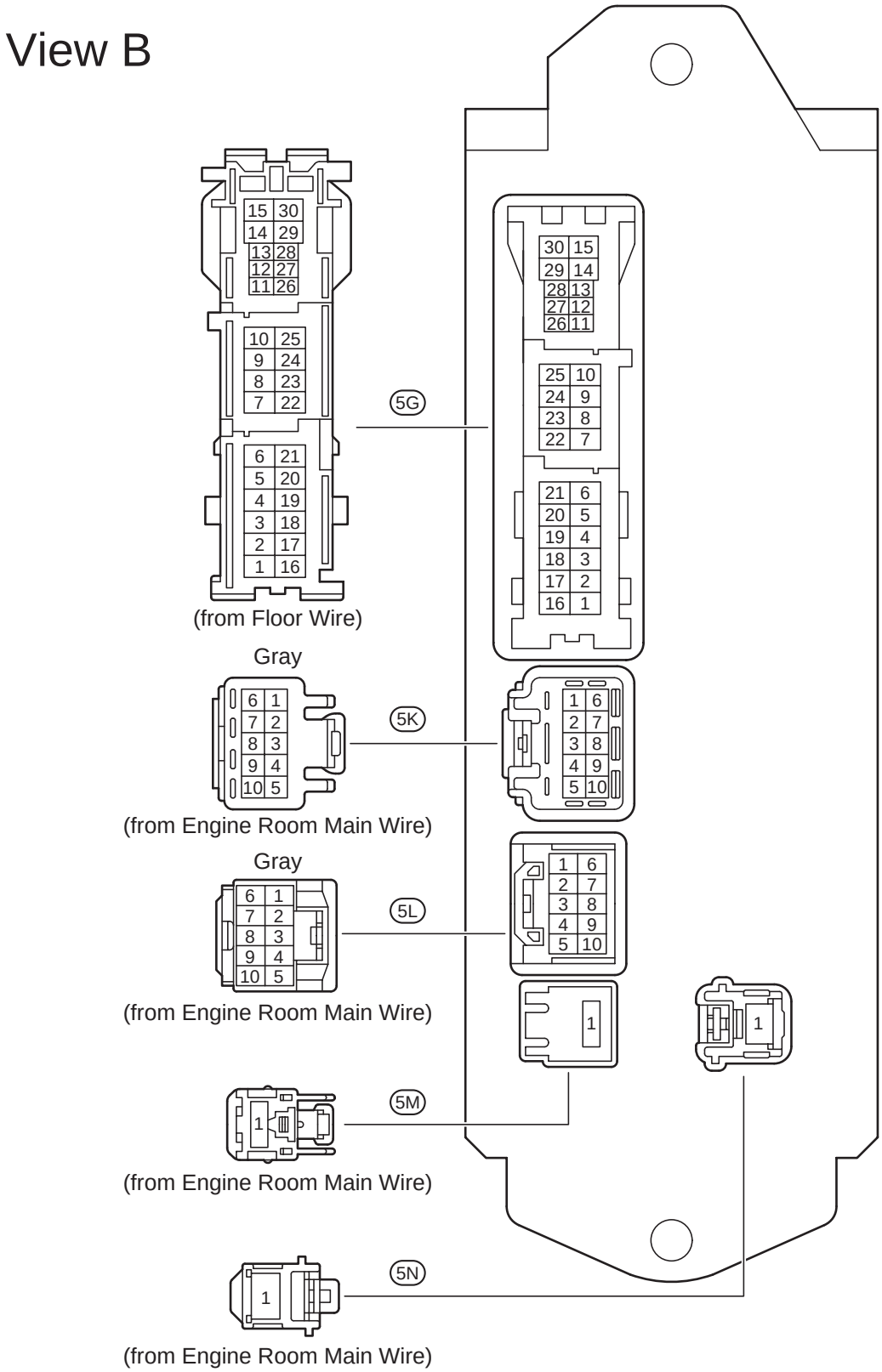

View C

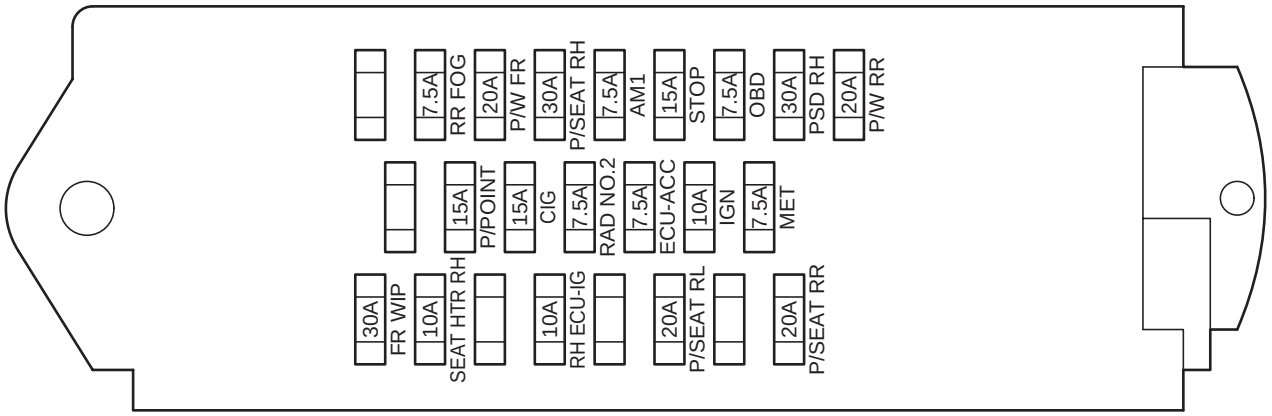
30A
FR WIP
10A
SEAT HTR RH
15A
P/POINT
7.5A
RR FOG
20A
P/W FR
15A
CIG
10A
RH ECU-IG
7.5A
RAD NO.2
30A
P/SEAT RH
7.5A
ECU-ACC
7.5A
AM1
20A
P/SEAT RL
10A
IGN
15A
STOP
7.5A
MET
7.5A
OBD
30A
PSD RH
20A
P/SEAT RR
20A
P/W RR