F RELAY LOCATIONS

: Driver Side J/B Assembly	Cowl Side Panel LH (See Page 21)

(LHD)

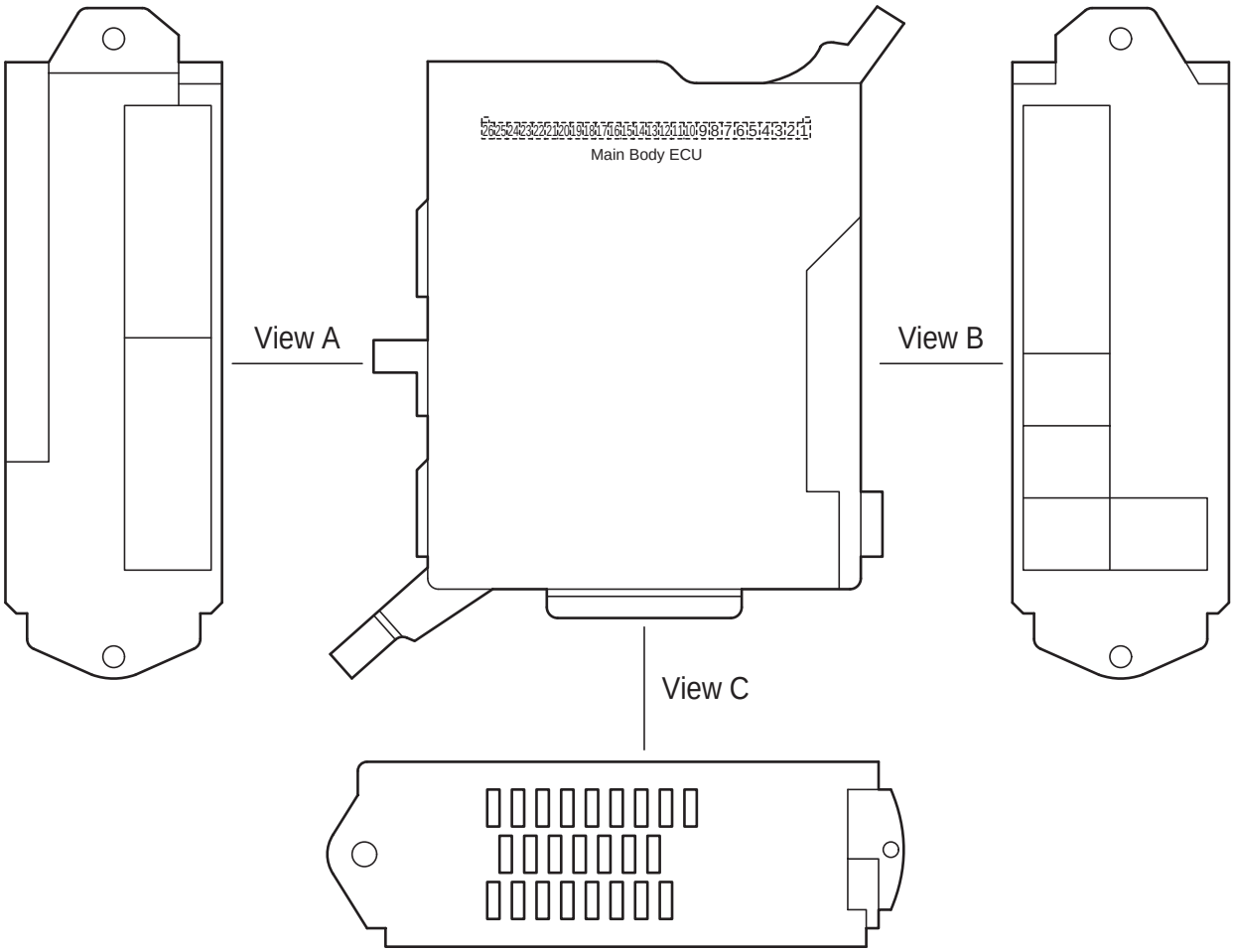

View A

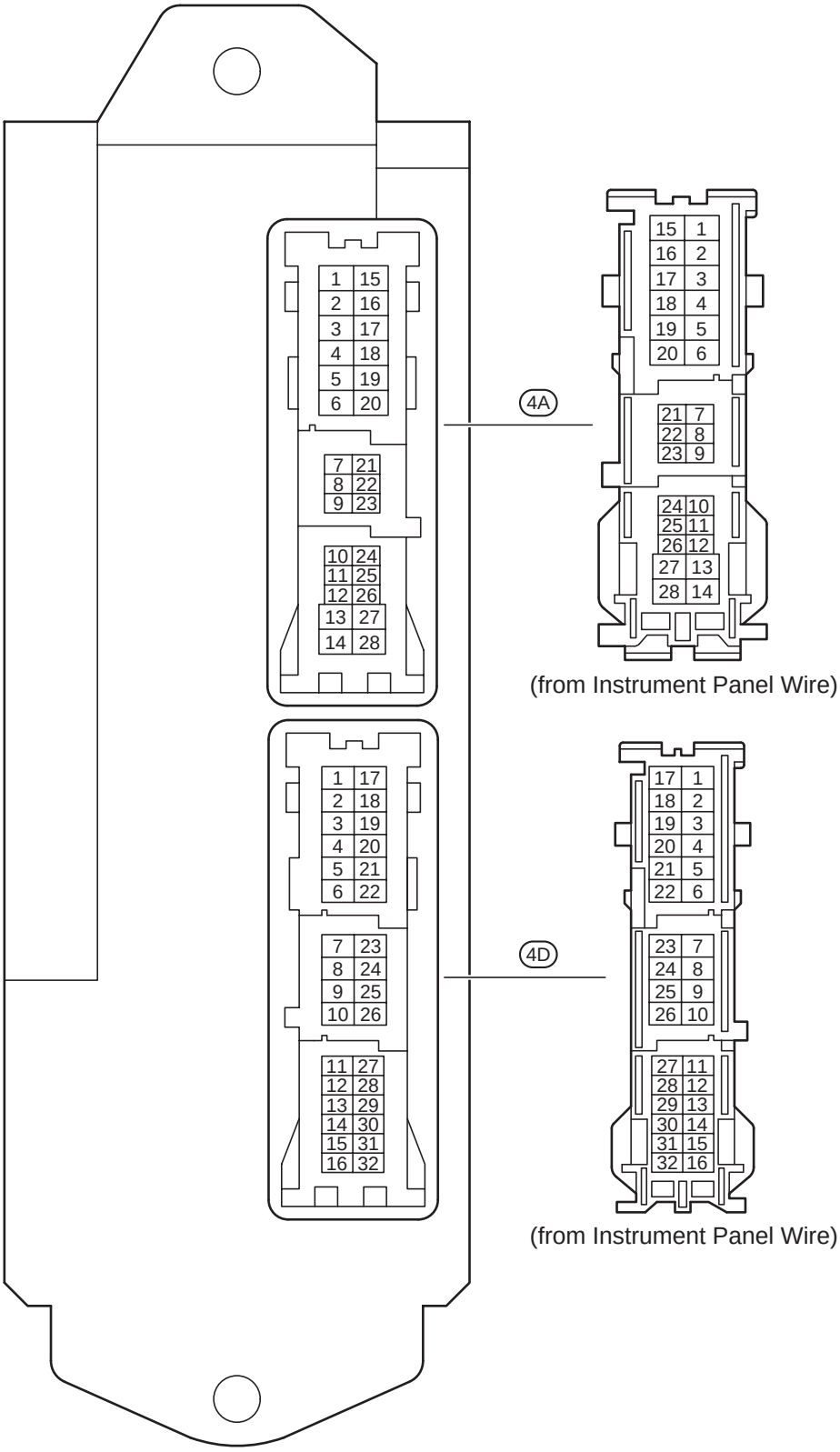
1 15
2 16
3 17
4 18
5 19
6 20
7 21
8 22
9 23
10 24
11 25
12 26
13 27
14 28
4A
15 1
16 2
17 3
18 4
19 5
20 6
21 7
22 8
23 9
24 10
25 11
26 12
27 13
28 14
(from Instrument Panel Wire)
1 17
2 18
3 19
4 20
5 21
6 22
7 23
8 24
9 25
10 26
11 27
12 28
13 29
14 30
15 31
16 32
4D
17 1
18 2
19 3
20 4
21 5
22 6
23 7
24 8
25 9
26 10
27 11
28 12
29 13
30 14
31 15
32 16
(from Instrument Panel Wire)

: Driver Side J/B Assembly	Cowl Side Panel LH (See Page 21)

(LHD)

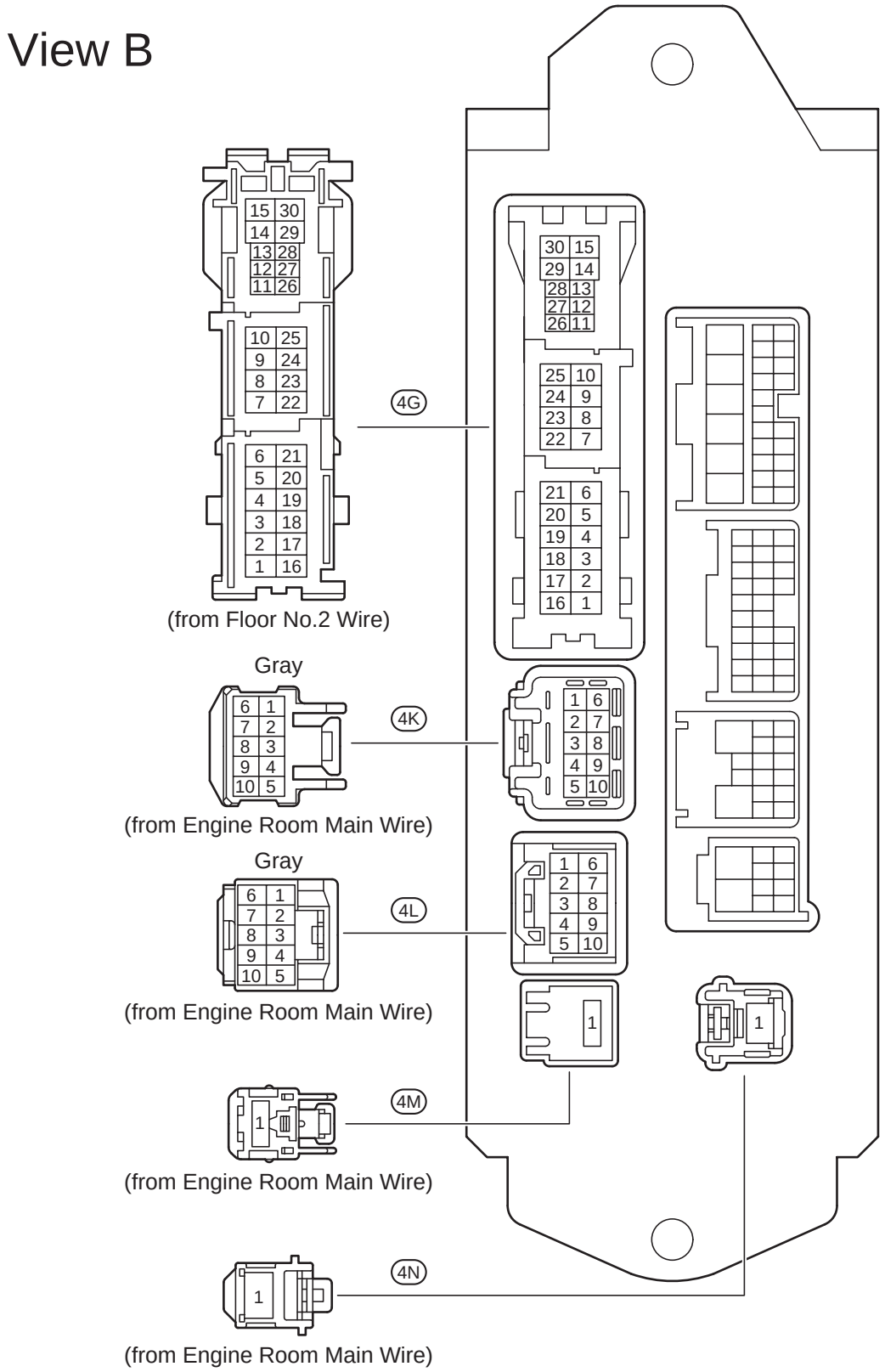

View C

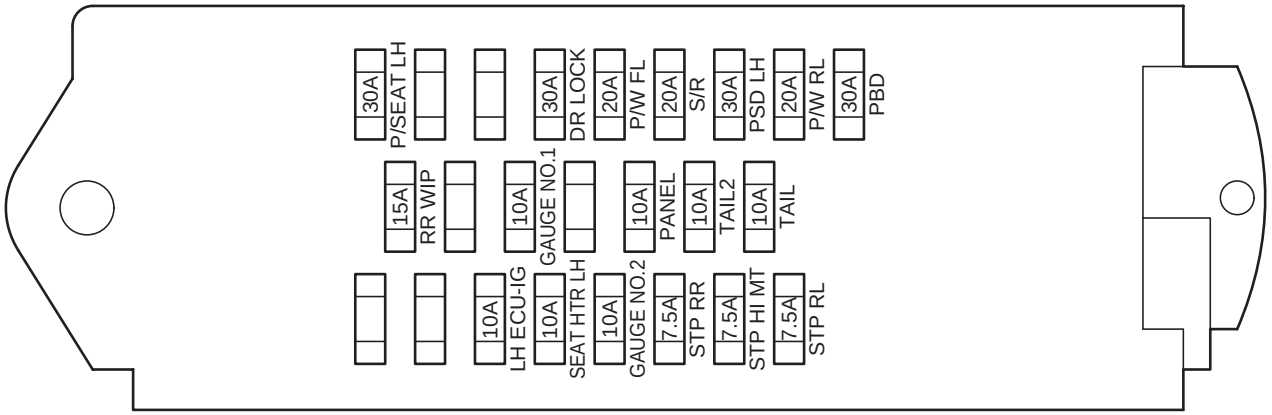
30A
P/SEAT LH
15A
RR WIP
10A
LH ECU-IG
30A
DR LOCK
10A
GAUGE NO.1
10A
SEAT HTR LH
20A
P/W FL
10A
PANEL
10A
GAUGE NO.2
20A
S/R
10A
TAIL2
7.5A
STP RR
30A
PSD LH
10A
TAIL
7.5A
STP HI MT
20A
P/W RL
7.5A
STP RL
30A
PBD

F RELAY LOCATIONS

: Passenger Side J/B Assembly	**Cowl Side Panel LH (See Page 21)**

(RHD)

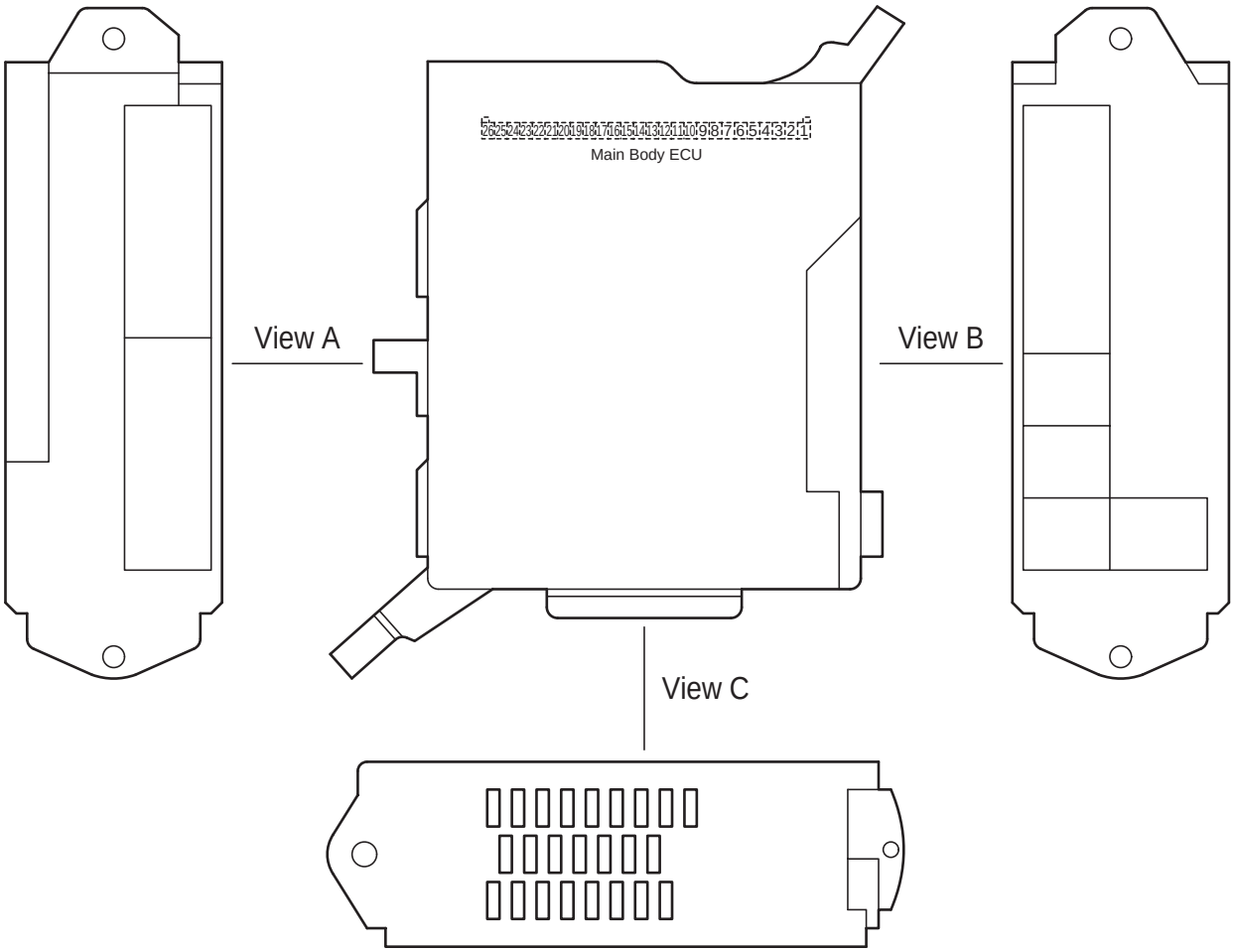

View A

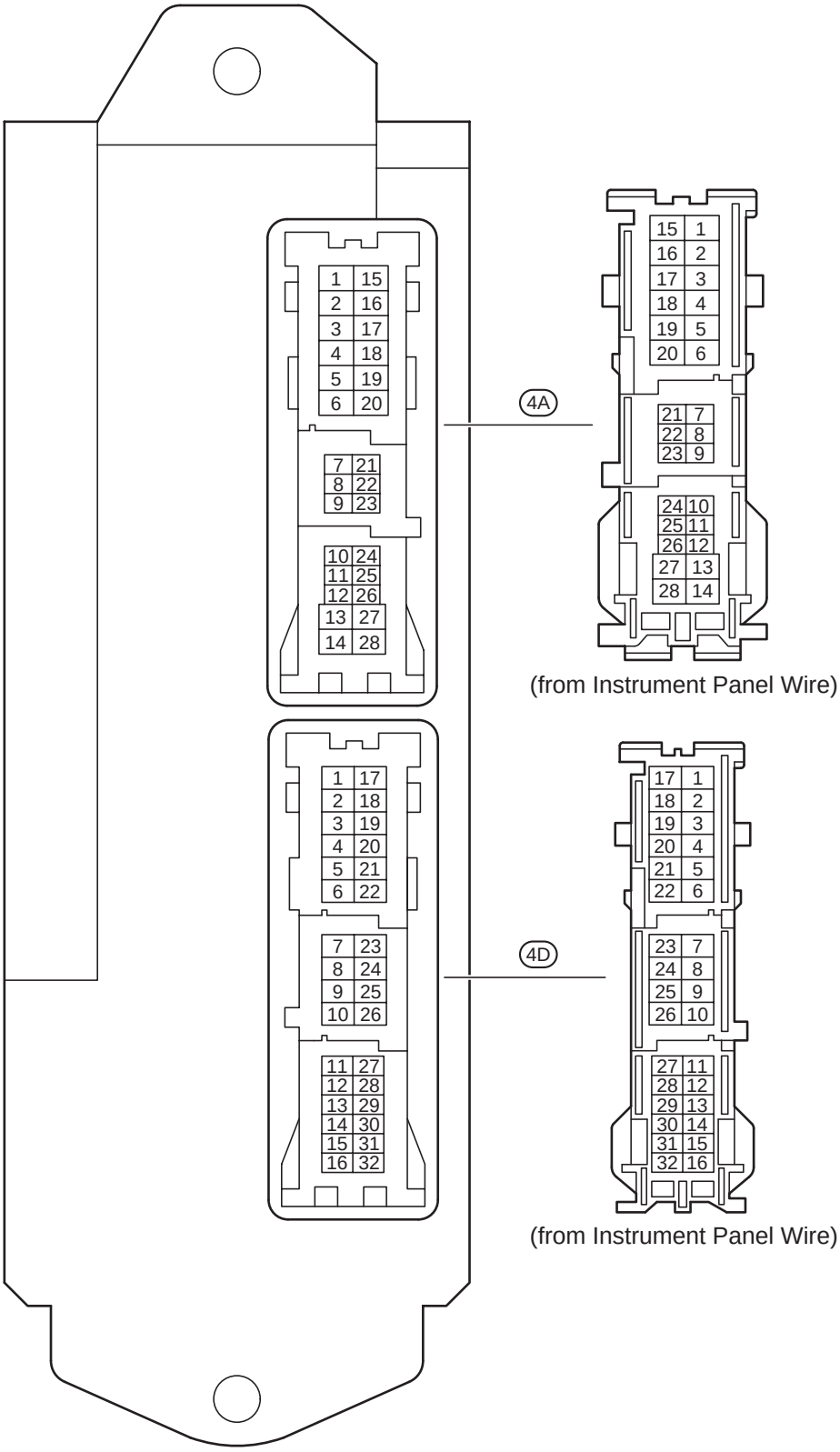
1 15
2 16
3 17
4 18
5 19
6 20
7 21
8 22
9 23
10 24
11 25
12 26
13 27
14 28
4A
15 1
16 2
17 3
18 4
19 5
20 6
21 7
22 8
23 9
24 10
25 11
26 12
27 13
28 14
(from Instrument Panel Wire)
1 17
2 18
3 19
4 20
5 21
6 22
7 23
8 24
9 25
10 26
11 27
12 28
13 29
14 30
15 31
16 32
4D
17 1
18 2
19 3
20 4
21 5
22 6
23 7
24 8
25 9
26 10
27 11
28 12
29 13
30 14
31 15
32 16
(from Instrument Panel Wire)

: Passenger Side J/B Assembly	Cowl Side Panel LH (See Page 21)

(RHD)

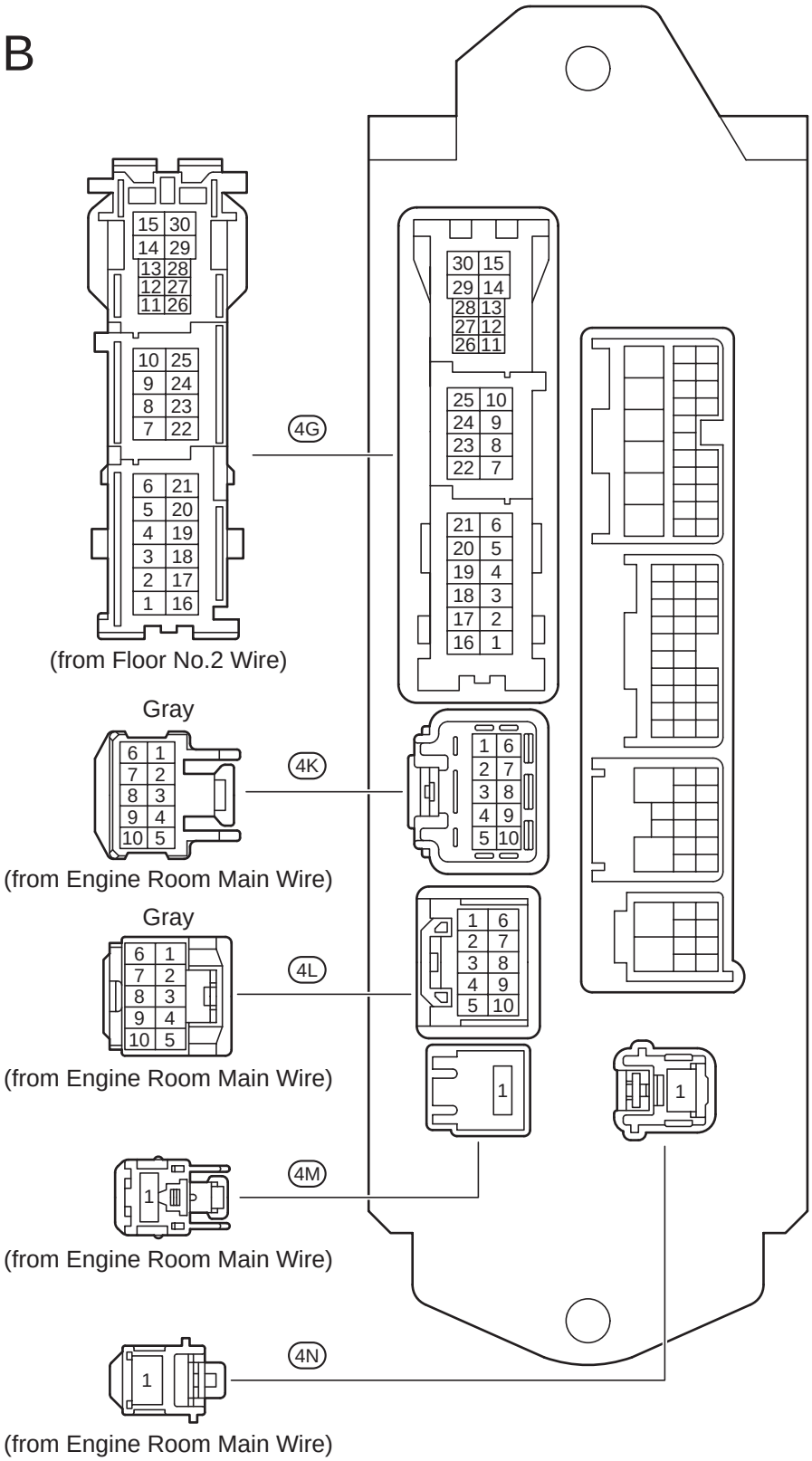

View C

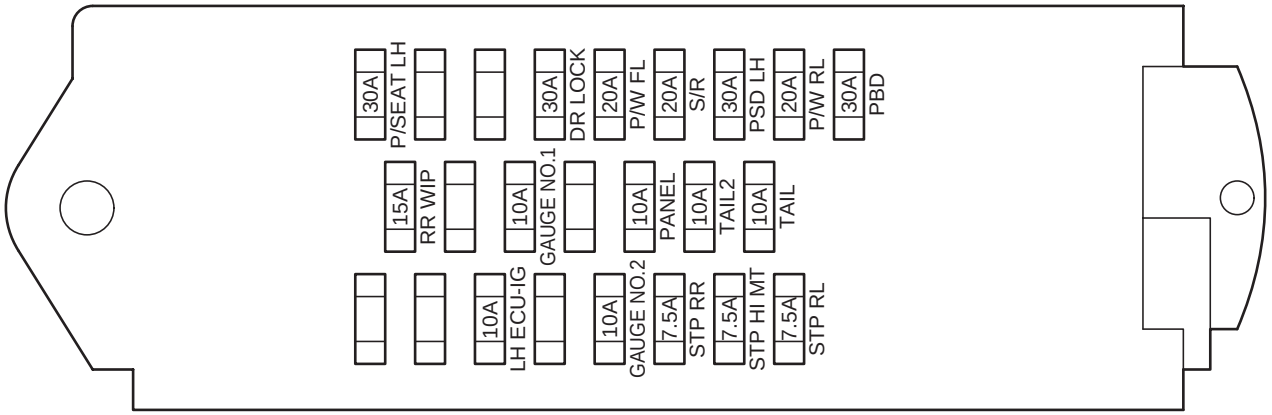
30A
P/SEAT LH
15A
RR WIP
10A
LH ECU-IG
30A
DR LOCK
10A
GAUGE NO.1
20A
P/W FL
10A
GAUGE NO.2
20A
S/R
10A
PANEL
7.5A
STP RR
30A
PSD LH
10A
TAIL2
7.5A
STP HI MT
20A
P/W RL
10A
TAIL
30A
PBD
7.5A
STP RL