[Engine Room R/B No.2 and Engine Room J/B No.2 Inner Circuit] (LHD)

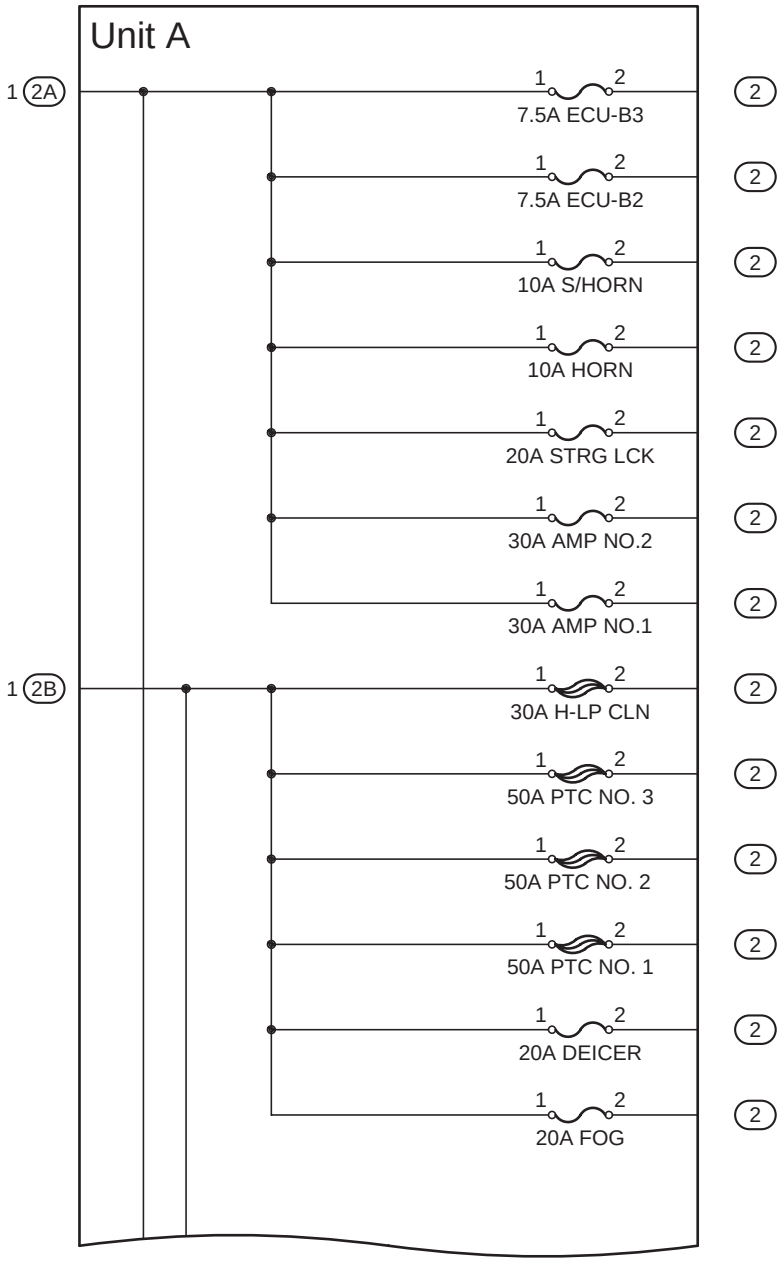

(Cont. Next Page)

* 1:2GR-FE
* 2:2AZ-FE
* 3:w/ Automatic High Beam System
* 4:w/o Automatic High Beam System

(Cont'd)

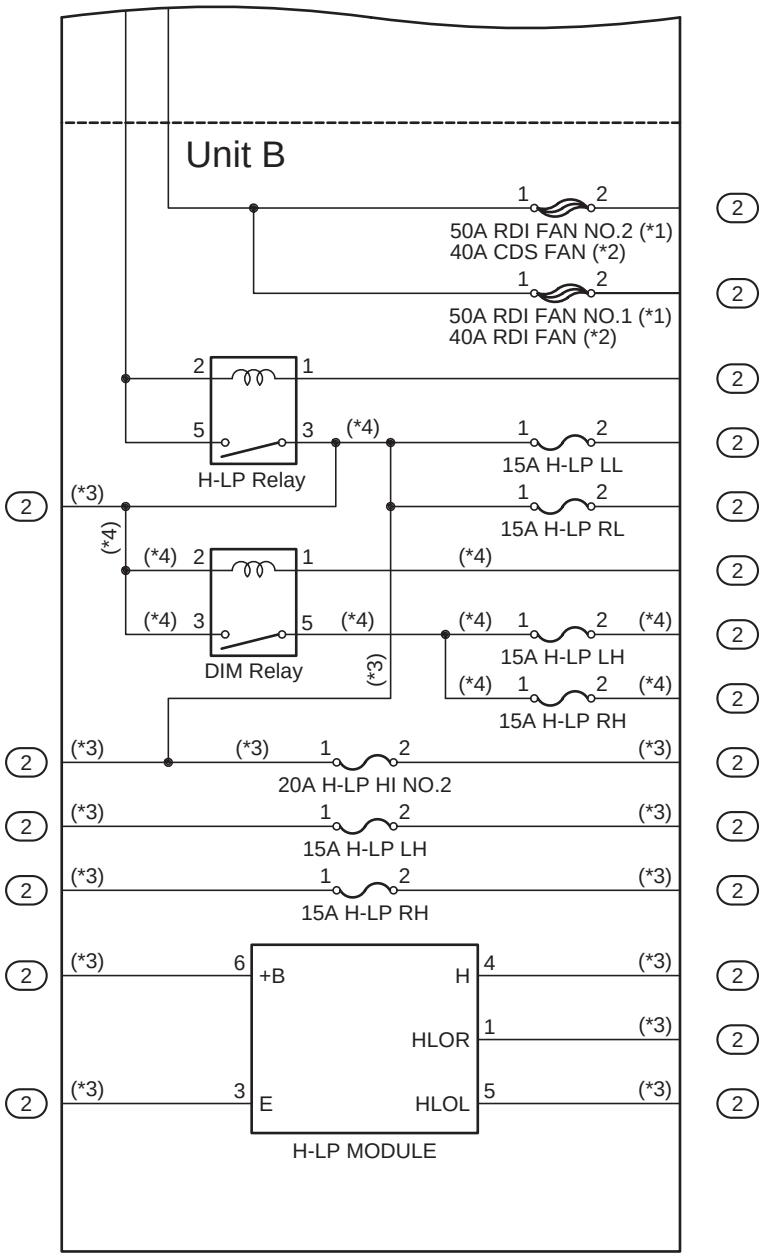
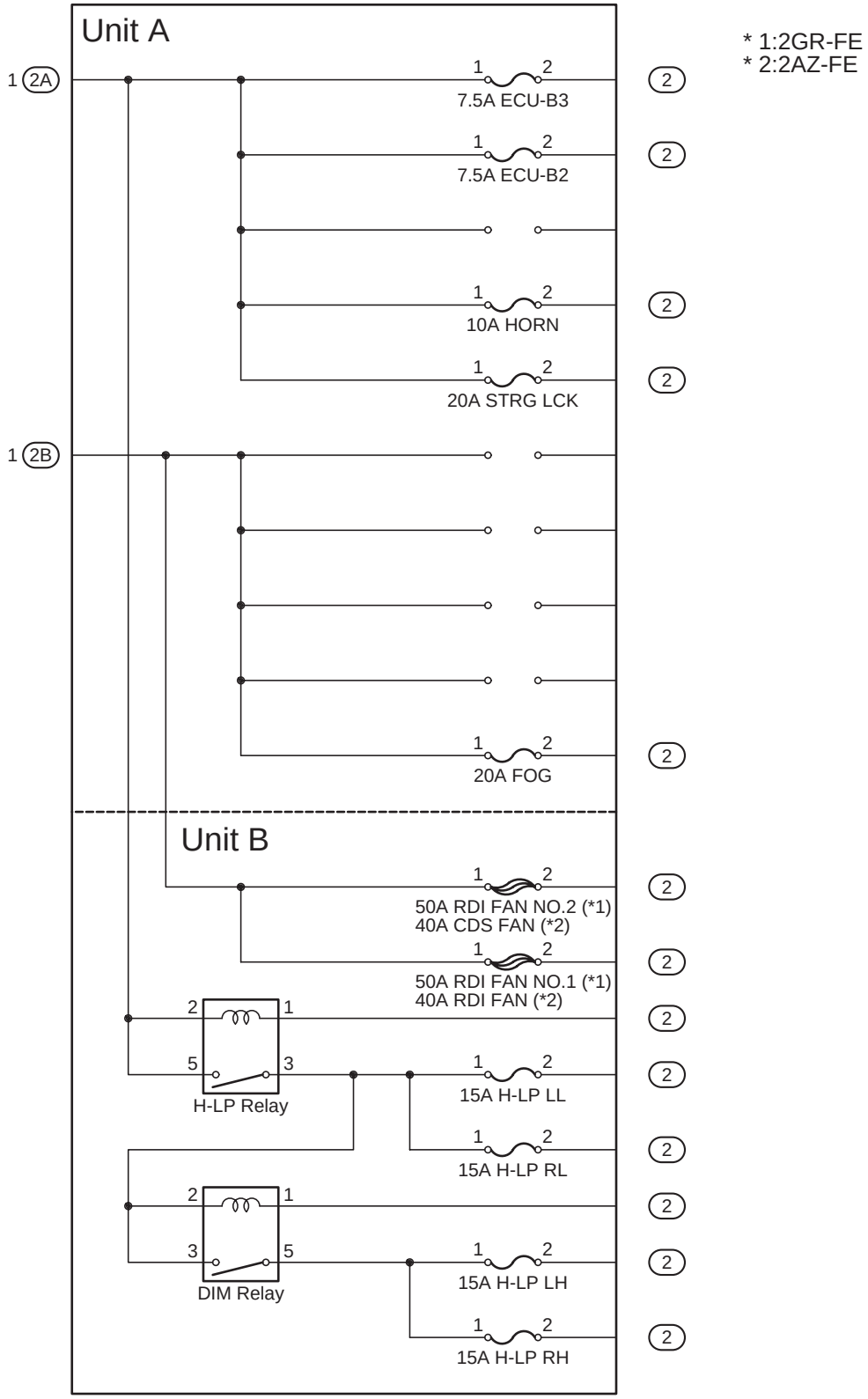
[Engine Room R/B No.2 and Engine Room J/B No.2 Inner Circuit] (RHD)