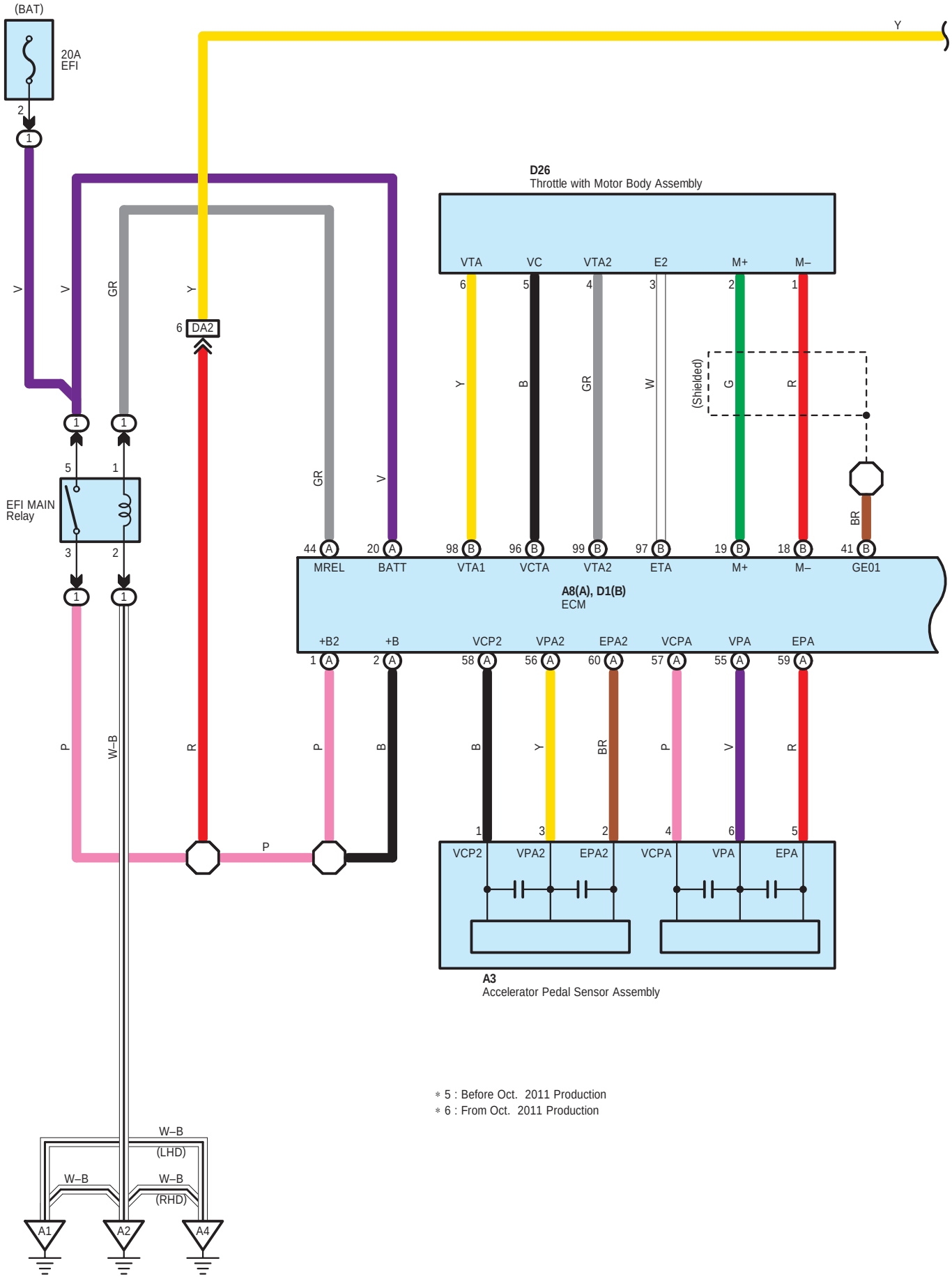

∗ 5 : Before Oct. 2011 Production
∗ 6 : From Oct. 2011 Production

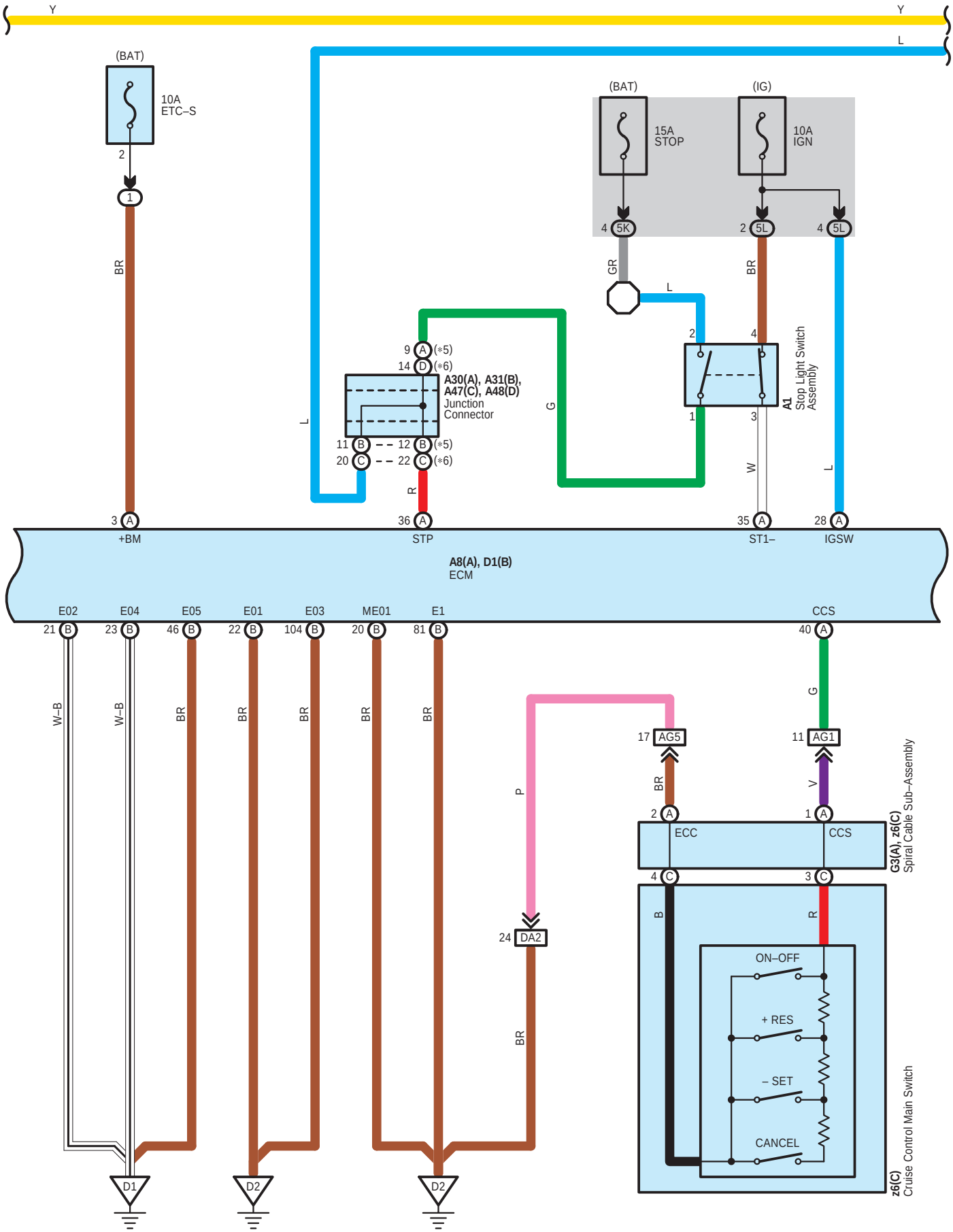
Y
Y
L
(BAT)
10A
ETC–S
2
1
BR
3
+BM
(BAT)
15A
STOP
(IG)
10A
IGN
4 5K
2 5L
4 5L
GR
L
BR
2
4
1
3
A1
Stop Light Switch
Assembly
W
L
9 (*5)
14 (*6)
A30(A), A31(B),
A47(C), A48(D)
Junction
Connector
11 (*5)
20 (*6)
12 (*5)
22 (*6)
L
G
R
36
STP
35
ST1–
28
IGSW
A8(A), D1(B)
ECM
E02
E04
E05
E01
E03
ME01
E1
CCS
21
23
46
22
104
20
81
40
W–B
W–B
BR
BR
BR
BR
BR
G
17 AG5
11 AG1
BR
V
P
2
1
ECC
CCS
G3(A), z6(C)
Spiral Cable Sub–Assembly
4
3
B
R
24 DA2
BR
ON–OFF
+ RES
– SET
CANCEL
z6(C)
Cruise Control Main Switch
D1
D2
D2

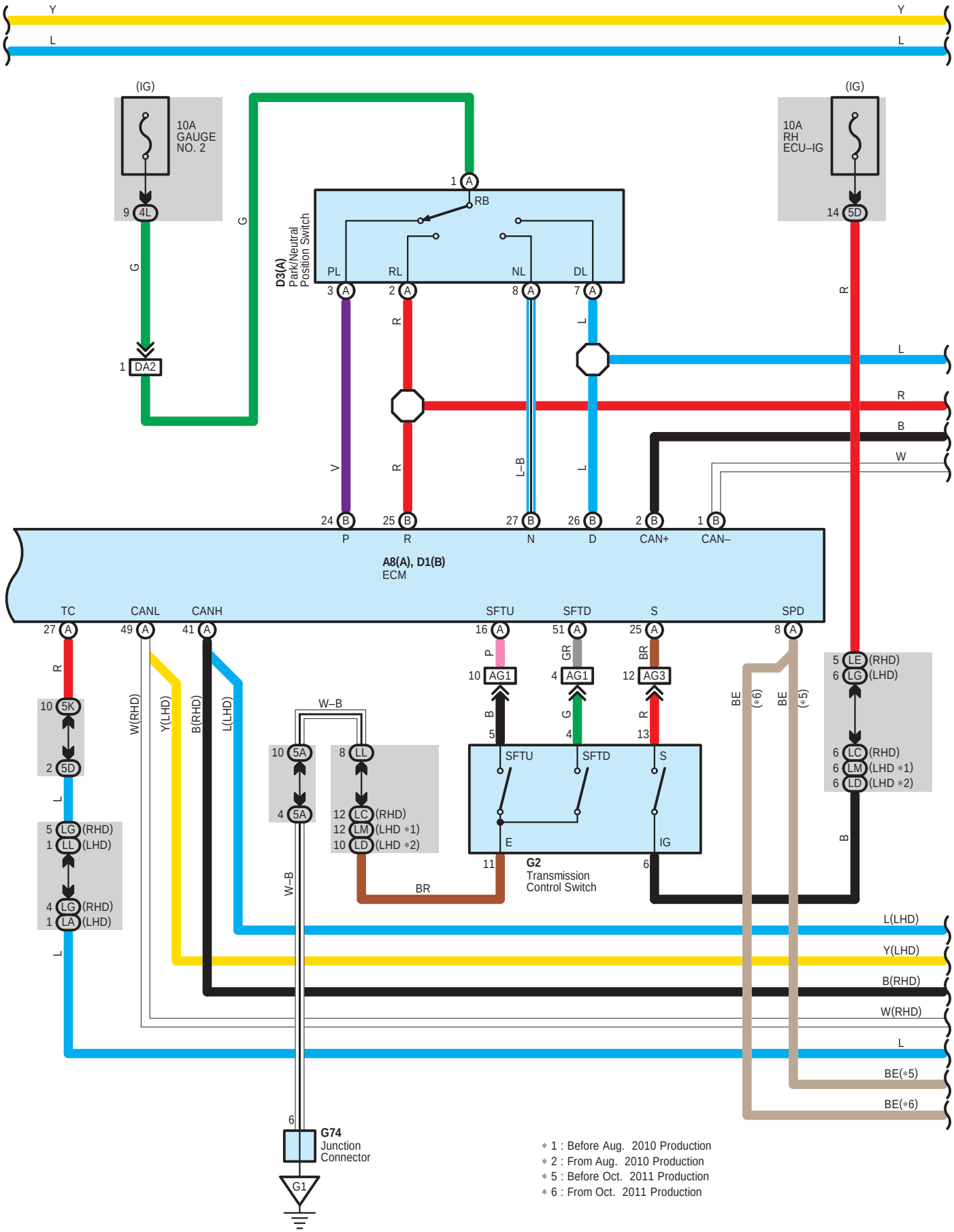
Y
L
(IG)
10A
GAUGE
NO. 2
9 4L
G
1 DA2
D3(A)
Park/Neutral
Position Switch
1 A
RB
PL
RL
NL
DL
3 A
2 A
8 A
7 A
(IG)
10A
RH
ECU–IG
14 5D
R
V
L–B
24 B
25 B
27 B
26 B
2 B
1 B
P
R
N
D
CAN+
CAN–
W
B
A8(A), D1(B)
ECM
TC
CANL
CANH
SFTU
SFTD
S
SPD
27 A
49 A
41 A
16 A
51 A
25 A
8 A
10 5K
2 5D
5 LG (RHD)
1 LL (LHD)
4 LG (RHD)
1 LA (LHD)
W(RHD)
Y(LHD)
B(RHD)
L(LHD)
W–B
10 5A
4 5A
8 LL
12 LC (RHD)
12 LM (LHD ∗1)
10 LD (LHD ∗2)
BR
10 AG1
4 AG1
12 AG3
GR
5 LE (RHD)
6 LG (LHD)
6 LC (RHD)
6 LM (LHD ∗1)
6 LD (LHD ∗2)
BE
(∗6)
(∗5)
SFTU
SFTD
S
E
IG
11
6
G2
Transmission
Control Switch
G74
Junction
Connector
G1
∗ 1 : Before Aug. 2010 Production
∗ 2 : From Aug. 2010 Production
∗ 5 : Before Oct. 2011 Production
∗ 6 : From Oct. 2011 Production

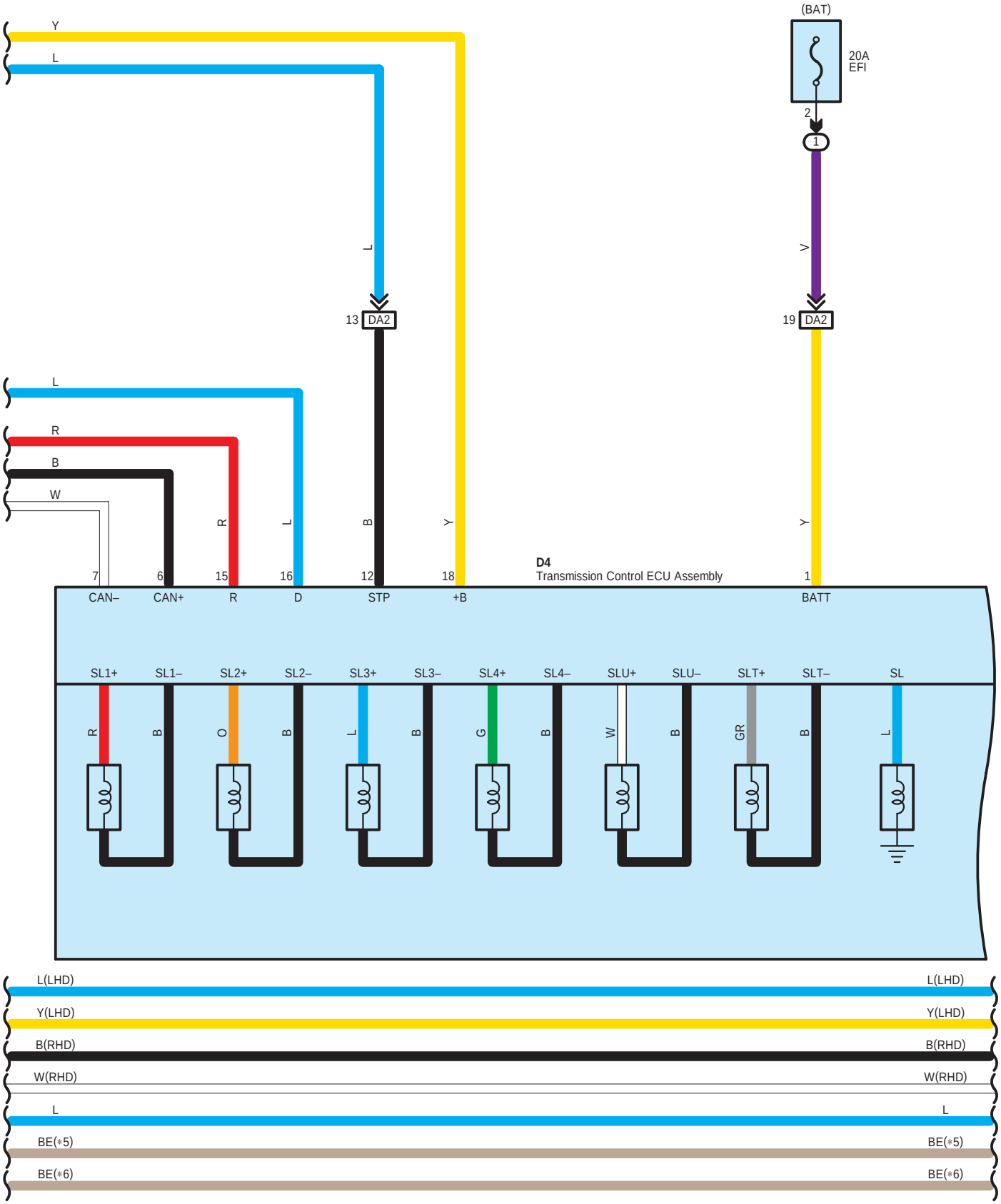
(BAT)
20A
EFI
2
1
Y
L
L
V
13 DA2
19 DA2
L
R
B
W
R
L
B
Y
Y
7
6
15
16
12
18
1
D4
Transmission Control ECU Assembly
CAN–
CAN+
R
D
STP
+B
BATT
SL1+
SL1–
SL2+
SL2–
SL3+
SL3–
SL4+
SL4–
SLU+
SLU–
SLT+
SLT–
SL
R
B
O
B
L
B
G
B
W
B
GR
B
L
L(LHD)
Y(LHD)
B(RHD)
W(RHD)
L
BE(*5)
BE(*6)
L(LHD)
Y(LHD)
B(RHD)
W(RHD)
L
BE(*5)
BE(*6)

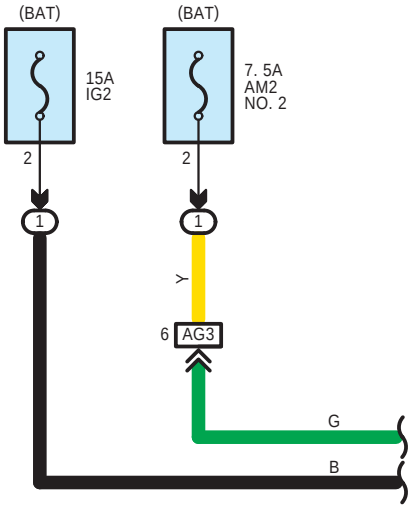

∗ 5 : Before Oct. 2011 Production
∗ 6 : From Oct. 2011 Production

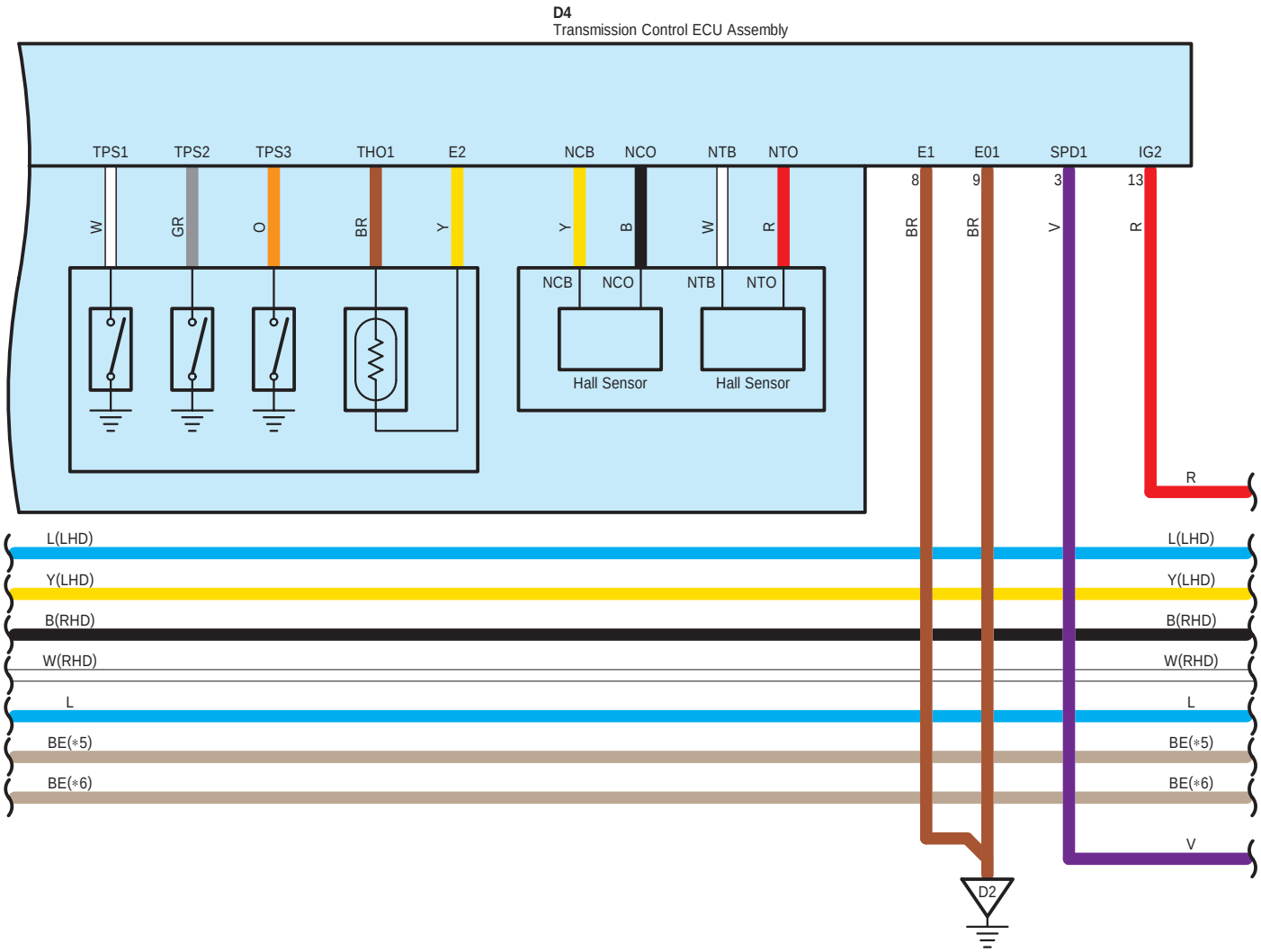

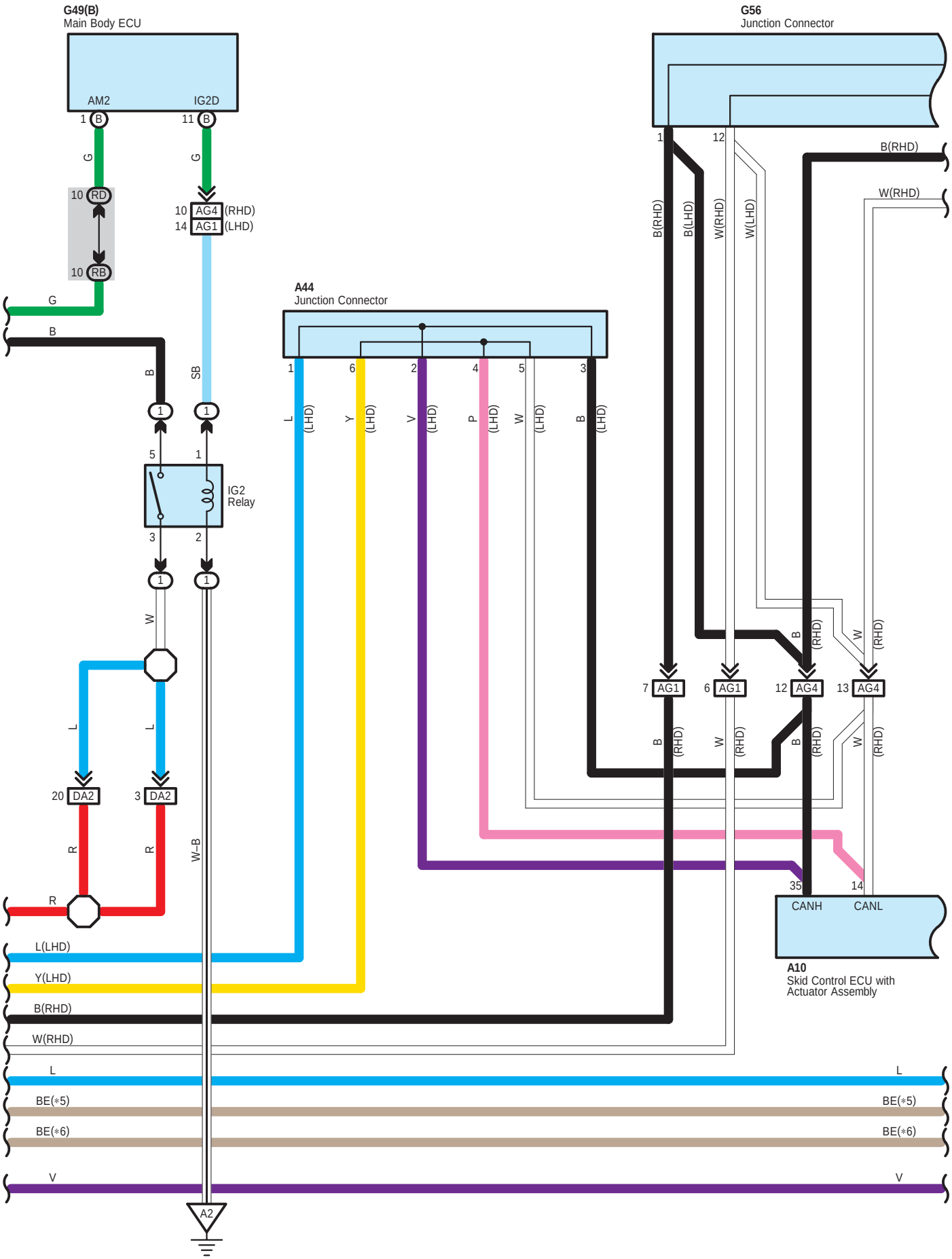
G49(B)
Main Body ECU
AM2
IG2D
1 B
11 B
G
G
10 RD
10 RB
10 AG4 (RHD)
14 AG1 (LHD)
G
B
B
SB
1
1
5
1
IG2
Relay
3
2
1
1
W
L
L
20 DA2
3 DA2
R
R
W–B
R
A2
A44
Junction Connector
1
6
2
4
5
3
L (LHD)
Y (LHD)
V (LHD)
P (LHD)
W (LHD)
B (LHD)
G56
Junction Connector
1
12
B(RHD)
W(RHD)
B(RHD)
B(LHD)
W(RHD)
W(LHD)
B (RHD)
W (RHD)
7 AG1
6 AG1
12 AG4
13 AG4
B (RHD)
W (RHD)
B (RHD)
W (RHD)
35
14
CANH
CANL
A10
Skid Control ECU with
Actuator Assembly
L(LHD)
Y(LHD)
B(RHD)
W(RHD)
L
L
BE(*5)
BE(*5)
BE(*6)
BE(*6)
V
V

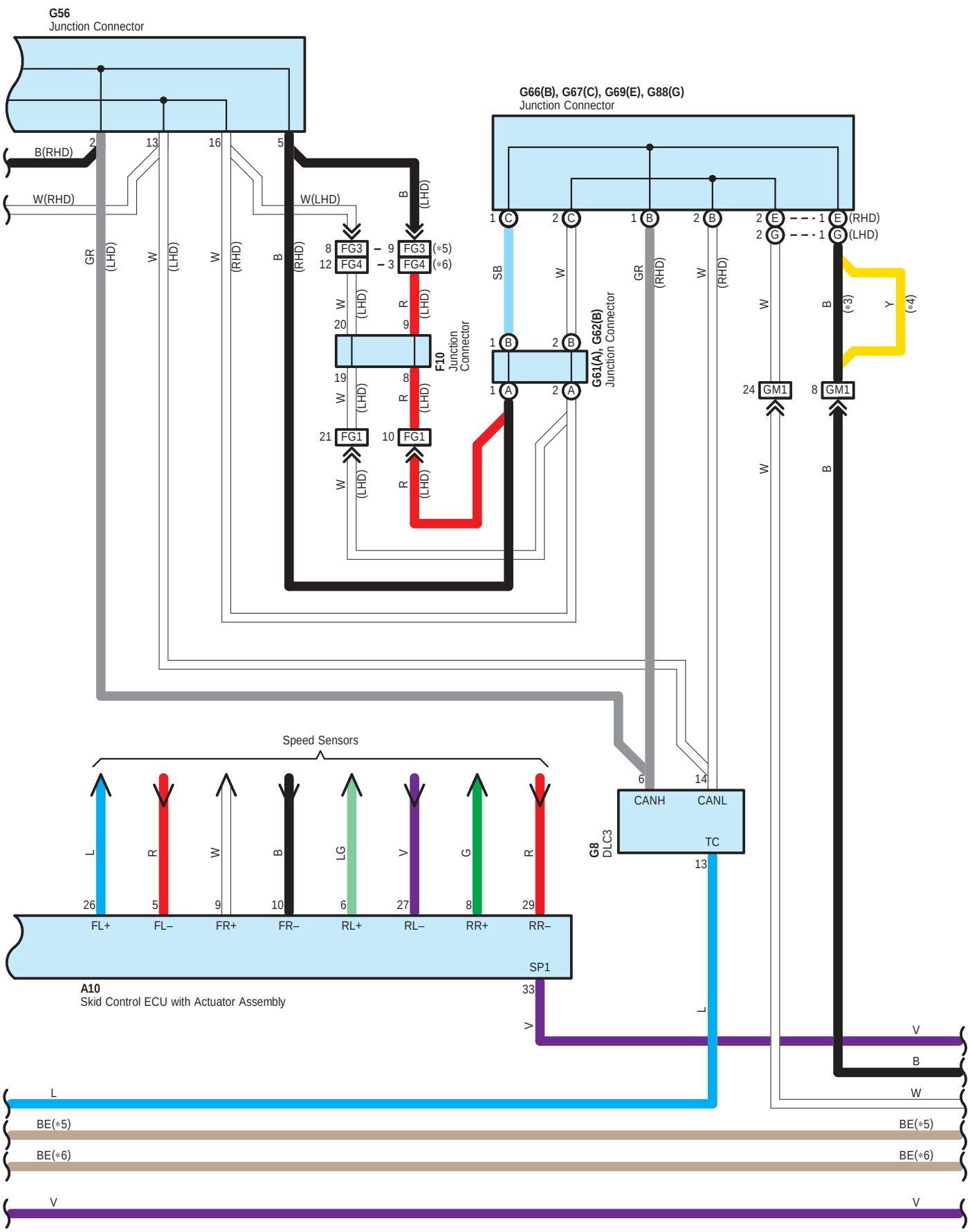
G56
Junction Connector
G66(B), G67(C), G69(E), G88(G)
Junction Connector
B(RHD)
W(RHD)
W(LHD)
FG3
FG4
FG1
F10
Junction
Connector
G61(A), G62(B)
Junction Connector
GM1
Speed Sensors
CANH
CANL
TC
G8
DLC3
FL+
FL–
FR+
FR–
RL+
RL–
RR+
RR–
SP1
A10
Skid Control ECU with Actuator Assembly
BE(*5)
BE(*6)

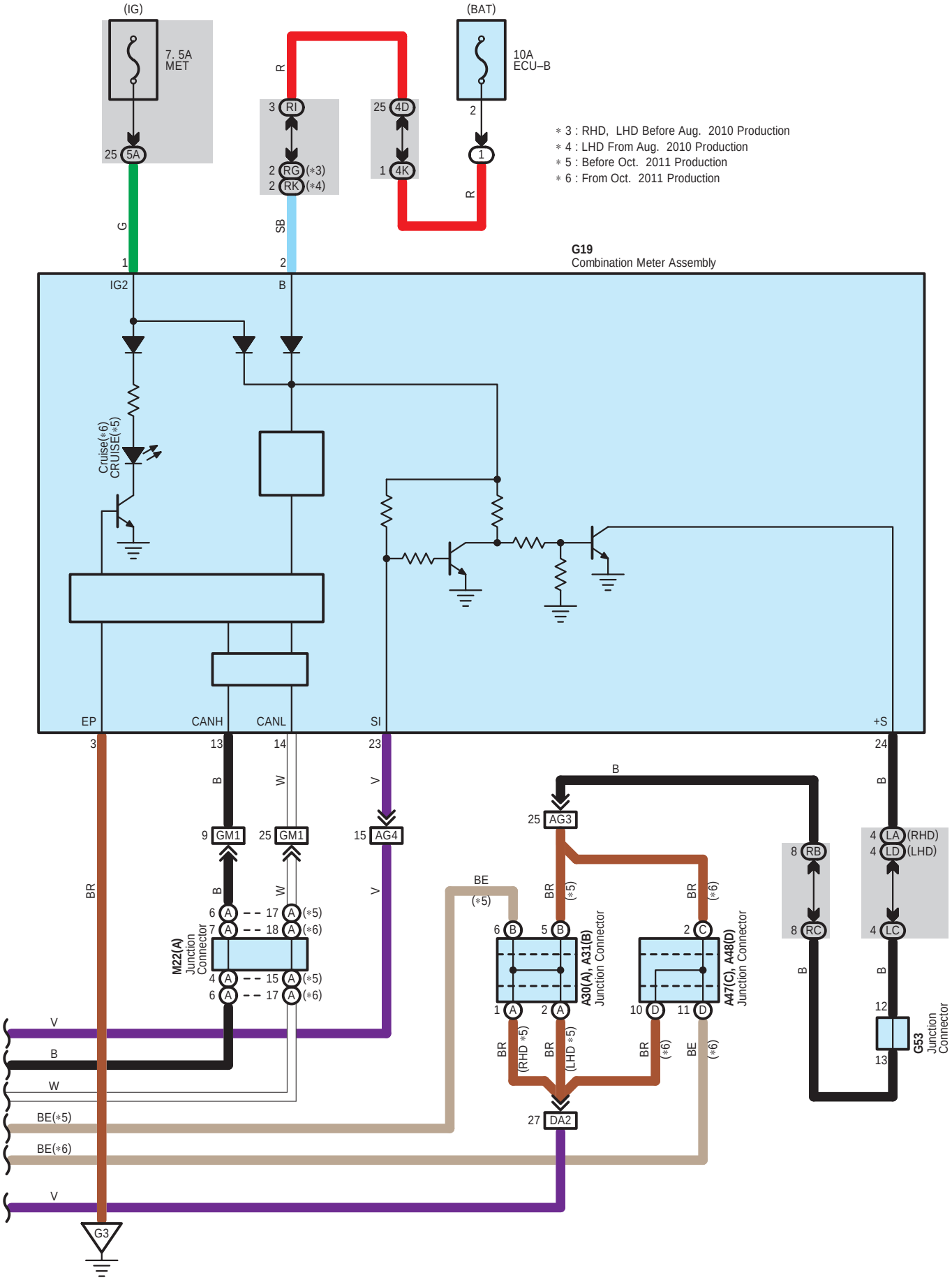
(IG)
7. 5A
MET
25 5A
G
1
IG2
R
3 RI
2 RG (*3)
2 RK (*4)
SB
2
B
25 4D
1 4K
(BAT)
10A
ECU–B
2
1
R
* 3 : RHD, LHD Before Aug. 2010 Production
* 4 : LHD From Aug. 2010 Production
* 5 : Before Oct. 2011 Production
* 6 : From Oct. 2011 Production
G19
Combination Meter Assembly
Cruise(*6)
CRUISE(*5)
EP
CANH
CANL
SI
+S
3
13
14
23
24
B
W
V
B
9 GM1
25 GM1
15 AG4
25 AG3
8 RB
8 RC
4 LA (RHD)
4 LD (LHD)
4 LC
BR
B
W
V
6 A 17 A (*5)
7 A 18 A (*6)
M22(A)
Junction
Connector
4 A 15 A (*5)
6 A 17 A (*6)
BE
(*5)
6 B 5 B
1 A 2 A
A30(A), A31(B)
Junction Connector
BR (*5)
BR (*6)
2 C
10 D 11 D
A47(C), A48(D)
Junction Connector
BR (RHD *5)
BR (LHD *5)
BR (*6)
BE (*6)
27 DA2
12
13
G53
Junction
Connector
V
B
W
BE(*5)
BE(*6)
V
G3

A 1
White

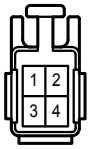

A 3
Black

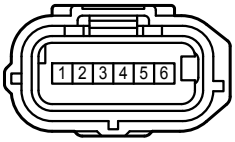

A 8
Black

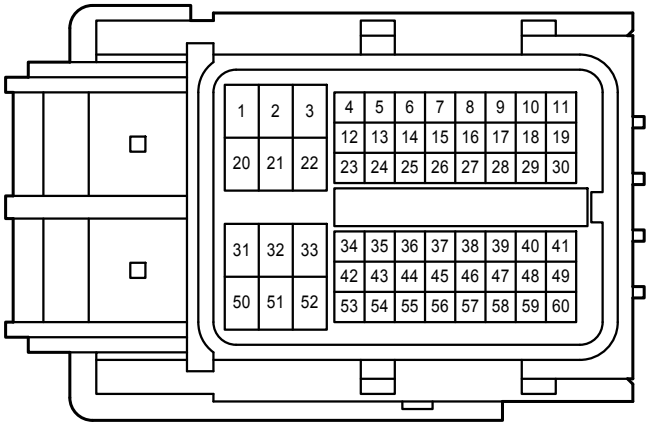

A 10
Black

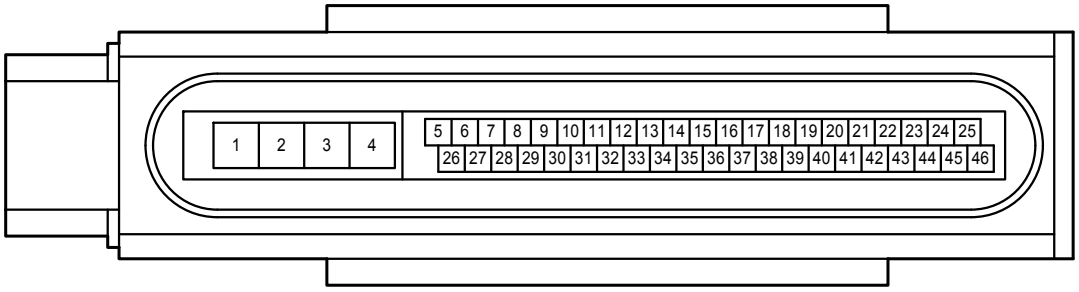

A 30
Black

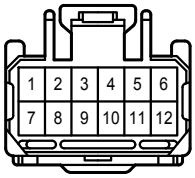

A 31
Black

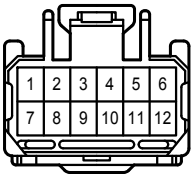

A 44
Gray

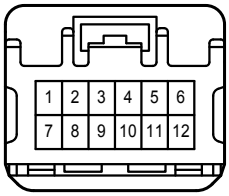

(Before Oct. 2011 Production)

A 44
Black

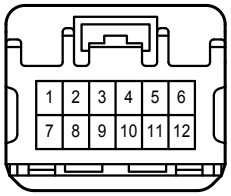

(From Oct. 2011 Production)

A 47
Black

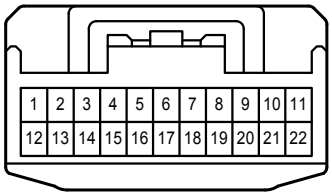

A 48
Black

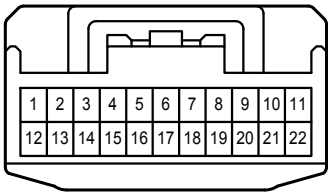

D 1
Black

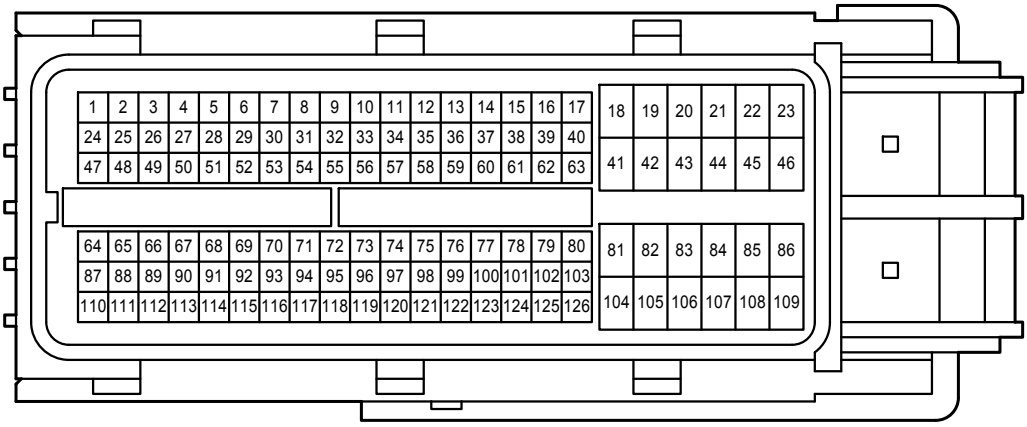

D 3
Gray

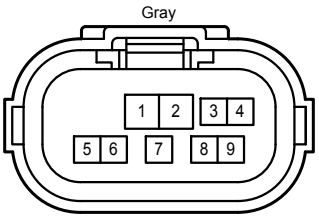

D 4
Black

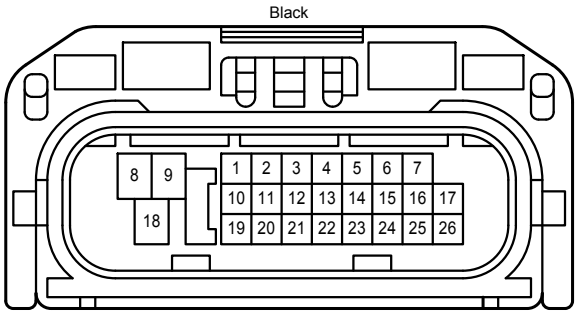

D 26
Black

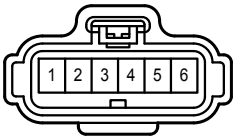

F 10
Black

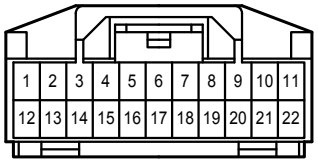

G 2
White

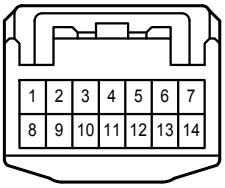

G 3
Black

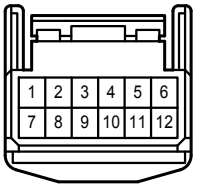

G 8
White

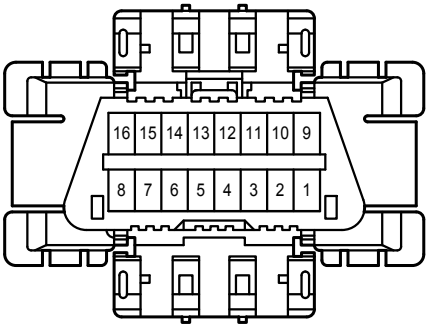

G 19
White

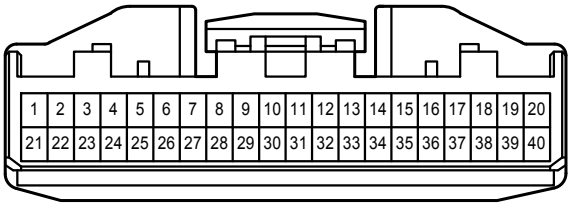

G 49
White

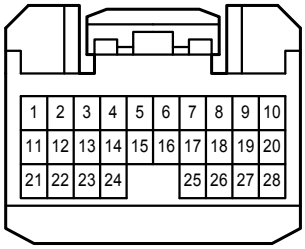

G 53
Black

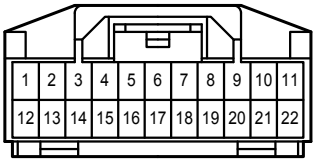

G 56
Gray

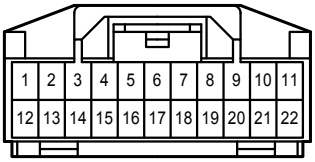

G 61
Brown

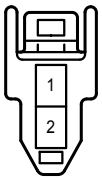

G 62
Brown

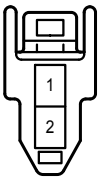

G 66
White

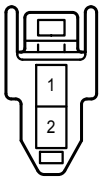

G 67
White

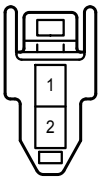

G 69
Black

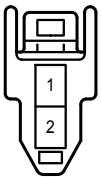

G 74
White

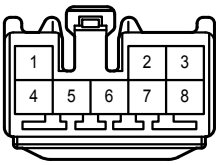

G 88
White

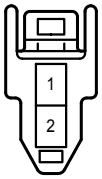

M 22
Black

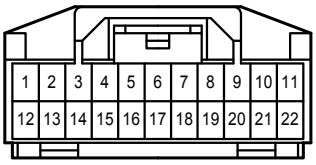

z 6
White

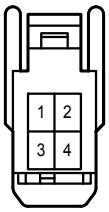

4D
White

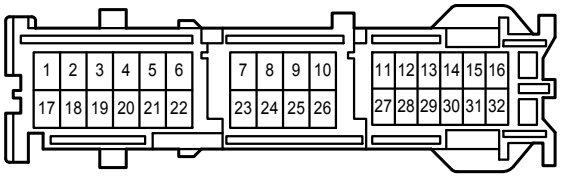

4K
Gray

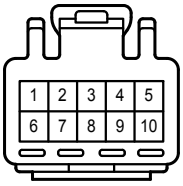

4L
Gray

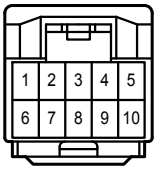

5A
White

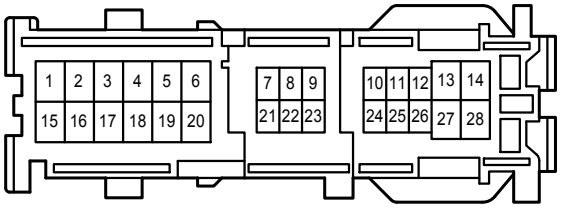

5D
White

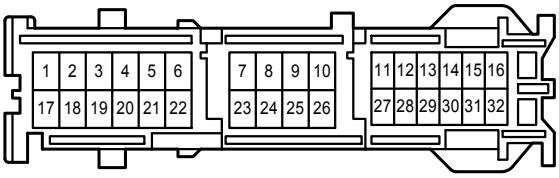

5K
Gray

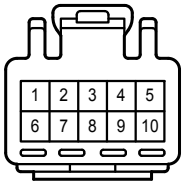

5L
Gray

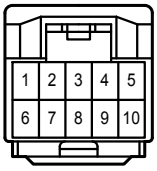

LA
White

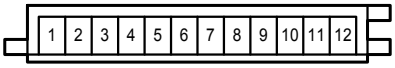

LC
White

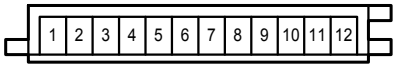

LD
Gray

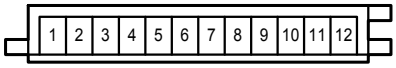

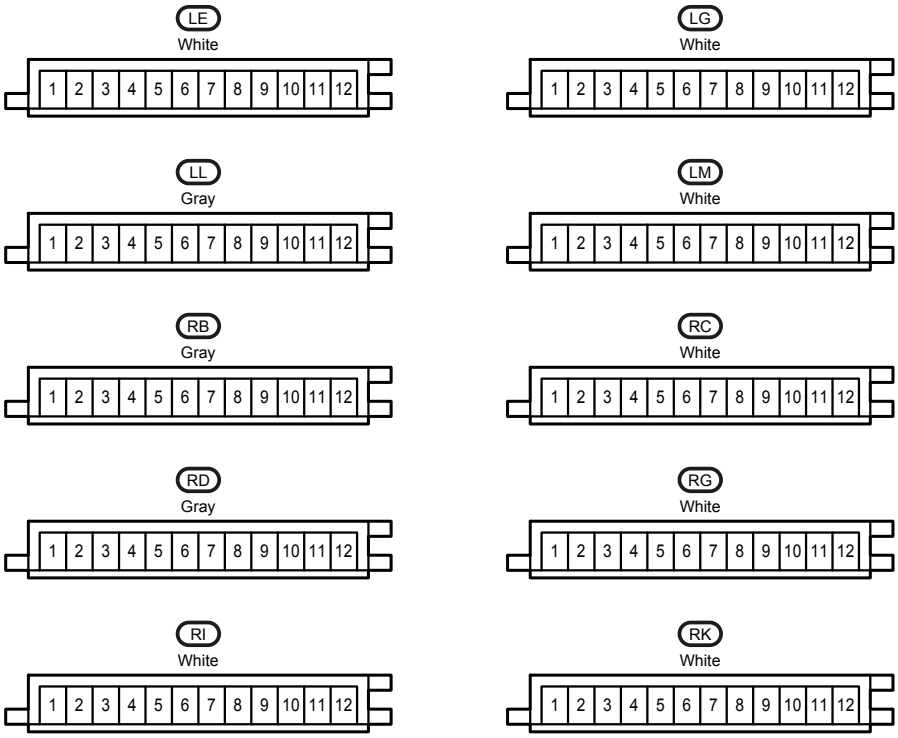
LE
White
LG
White
LL
Gray
LM
White
RB
Gray
RC
White
RD
Gray
RG
White
RI
White
RK
White
1 2 3 4 5 6 7 8 9 10 11 12

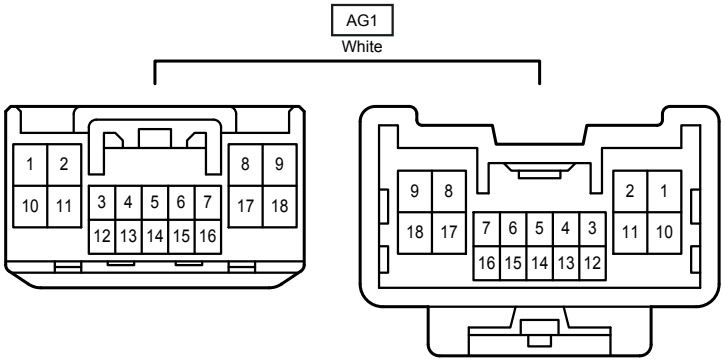
AG1
White
1 2 10 11 3 4 5 6 7 12 13 14 15 16 8 9 17 18
9 8 18 17 7 6 5 4 3 16 15 14 13 12 2 1 11 10

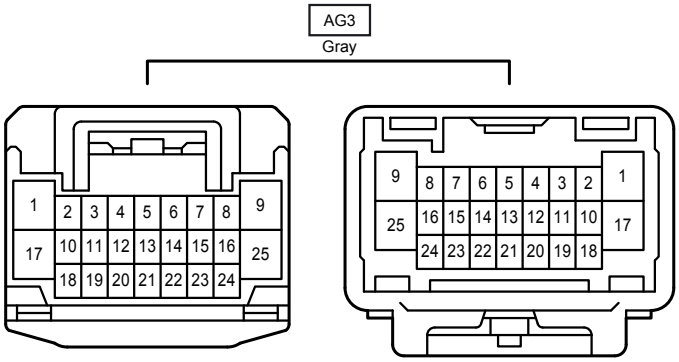
AG3
Gray
1 2 3 4 5 6 7 8 9 17 10 11 12 13 14 15 16 25 18 19 20 21 22 23 24
9 8 7 6 5 4 3 2 1 25 16 15 14 13 12 11 10 17 24 23 22 21 20 19 18

AG4
Blue

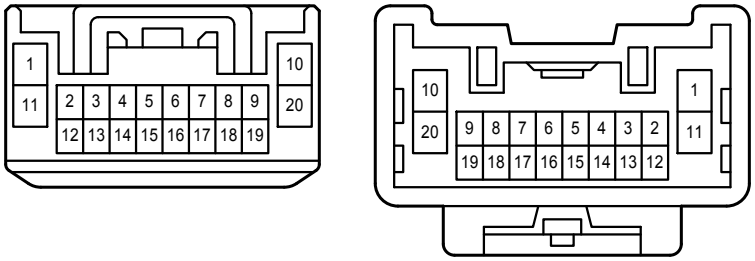

AG5
White

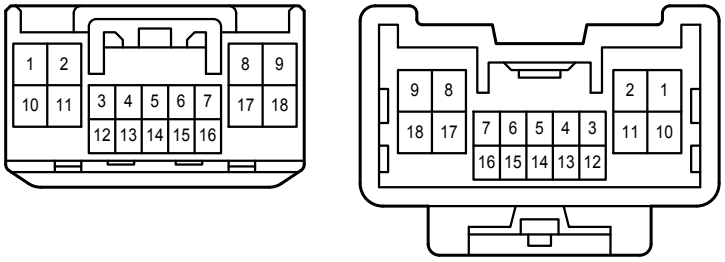

DA2
White

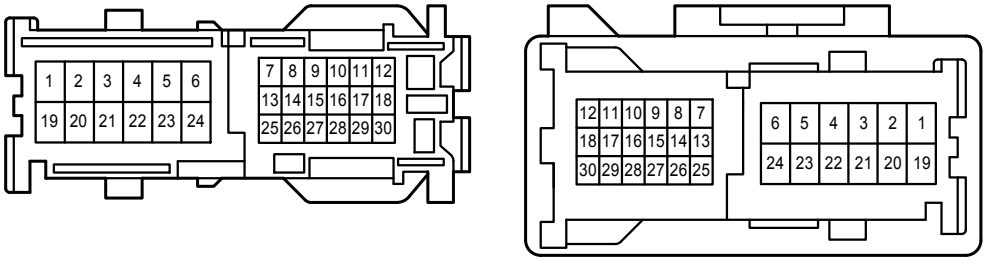

FG1
Blue

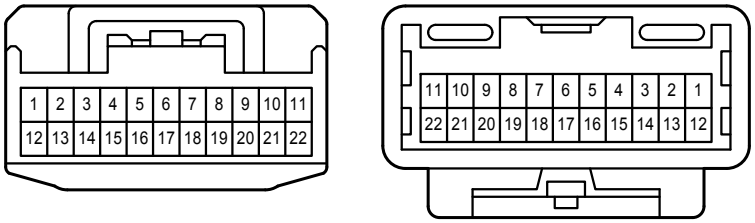

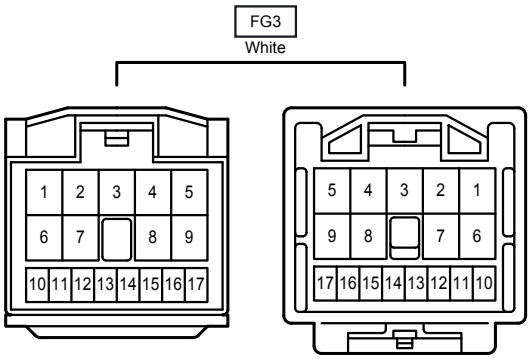
FG3
White
1 2 3 4 5
6 7 8 9
10 11 12 13 14 15 16 17
5 4 3 2 1
9 8 7 6
17 16 15 14 13 12 11 10

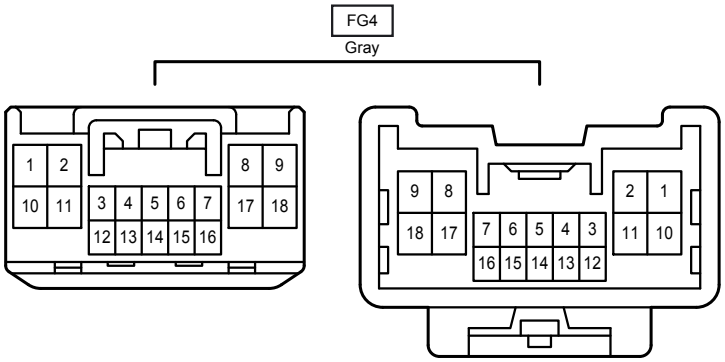
FG4
Gray
1 2
10 11
3 4 5 6 7
12 13 14 15 16
8 9
17 18
9 8
18 17
7 6 5 4 3
16 15 14 13 12
2 1
11 10

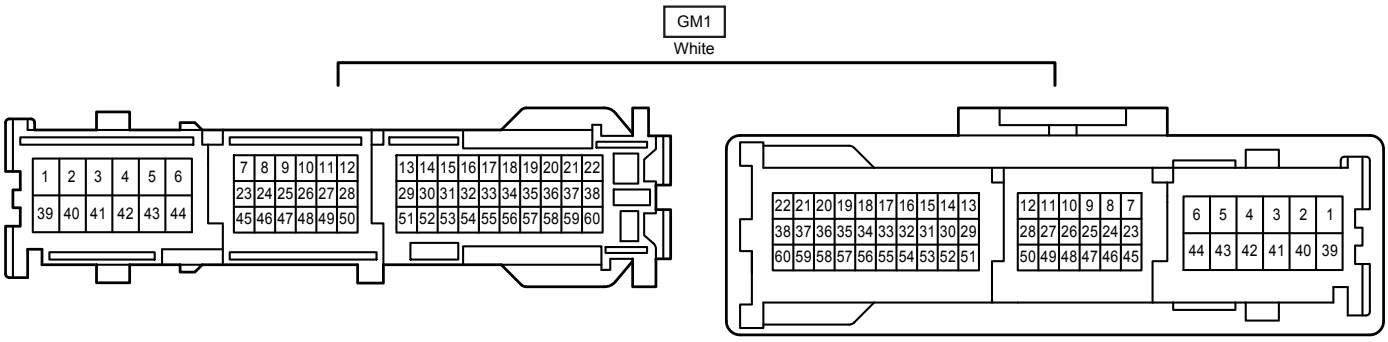
GM1
White
1 2 3 4 5 6
39 40 41 42 43 44
7 8 9 10 11 12
23 24 25 26 27 28
45 46 47 48 49 50
13 14 15 16 17 18 19 20 21 22
29 30 31 32 33 34 35 36 37 38
51 52 53 54 55 56 57 58 59 60
22 21 20 19 18 17 16 15 14 13
38 37 36 35 34 33 32 31 30 29
60 59 58 57 56 55 54 53 52 51
12 11 10 9 8 7
28 27 26 25 24 23
50 49 48 47 46 45
6 5 4 3 2 1
44 43 42 41 40 39