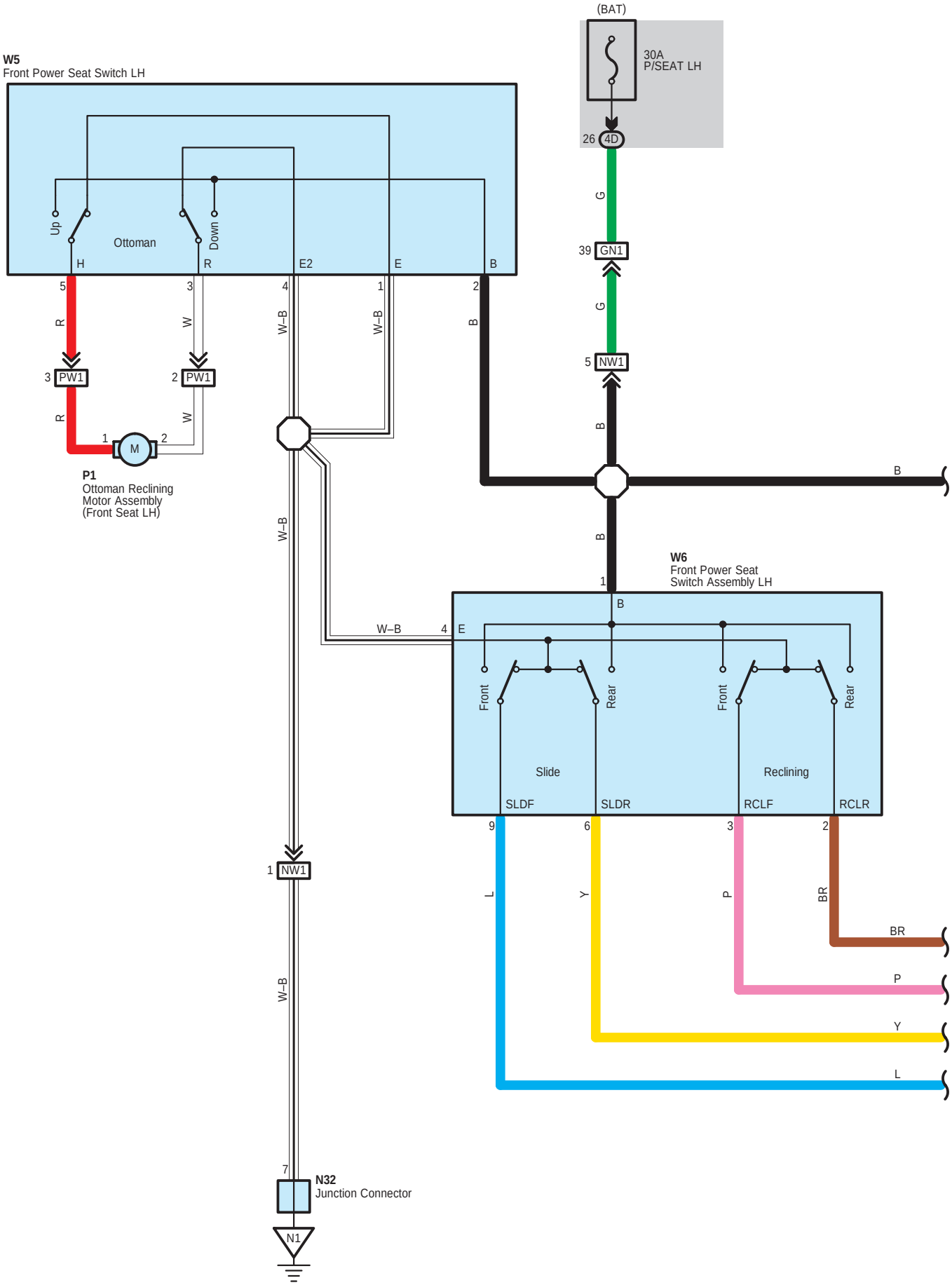
(BAT)
30A
P/SEAT LH
26
4D
G
39
GN1
G
5
NW1
B
B
W5
Front Power Seat Switch LH
Up
Ottoman
Down
H
R
E2
E
B
5
3
4
1
2
R
W
W–B
W–B
B
3
PW1
2
PW1
R
W
1
M
2
P1
Ottoman Reclining
Motor Assembly
(Front Seat LH)
W–B
B
B
W6
Front Power Seat
Switch Assembly LH
1
B
W–B
4
E
Front
Rear
Front
Rear
Slide
Reclining
SLDF
SLDR
RCLF
RCLR
9
6
3
2
L
Y
P
BR
BR
P
Y
L
1
NW1
W–B
7
N32
Junction Connector
N1

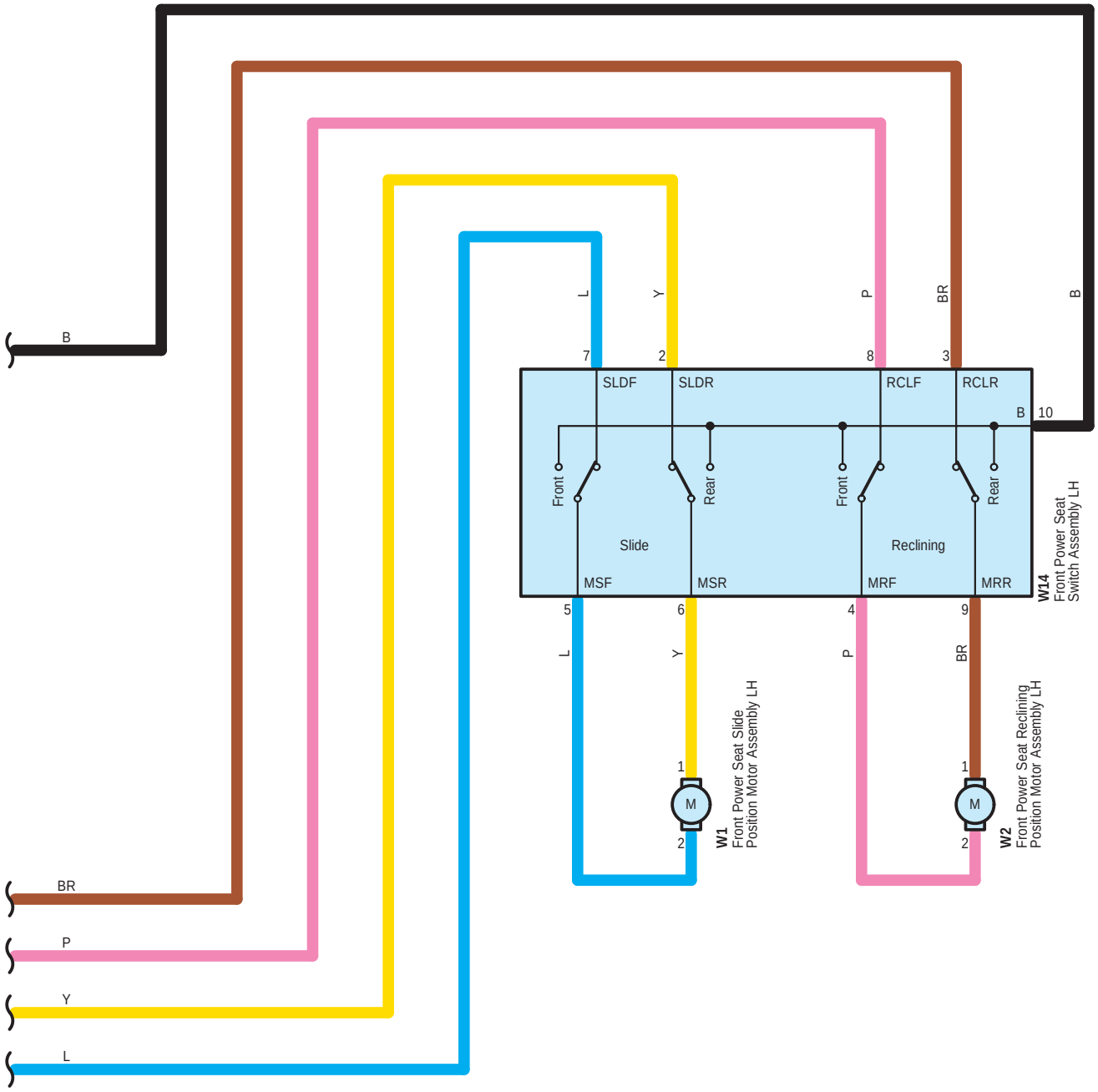
B
BR
P
Y
L
L
Y
P
BR
B
7
2
8
3
SLDF
SLDR
RCLF
RCLR
B
10
Front
Rear
Front
Rear
Slide
Reclining
MSF
MSR
MRF
MRR
W14
Front Power Seat
Switch Assembly LH
5
6
4
9
L
Y
P
BR
1
M
2
W1
Front Power Seat Slide
Position Motor Assembly LH
1
M
2
W2
Front Power Seat Reclining
Position Motor Assembly LH

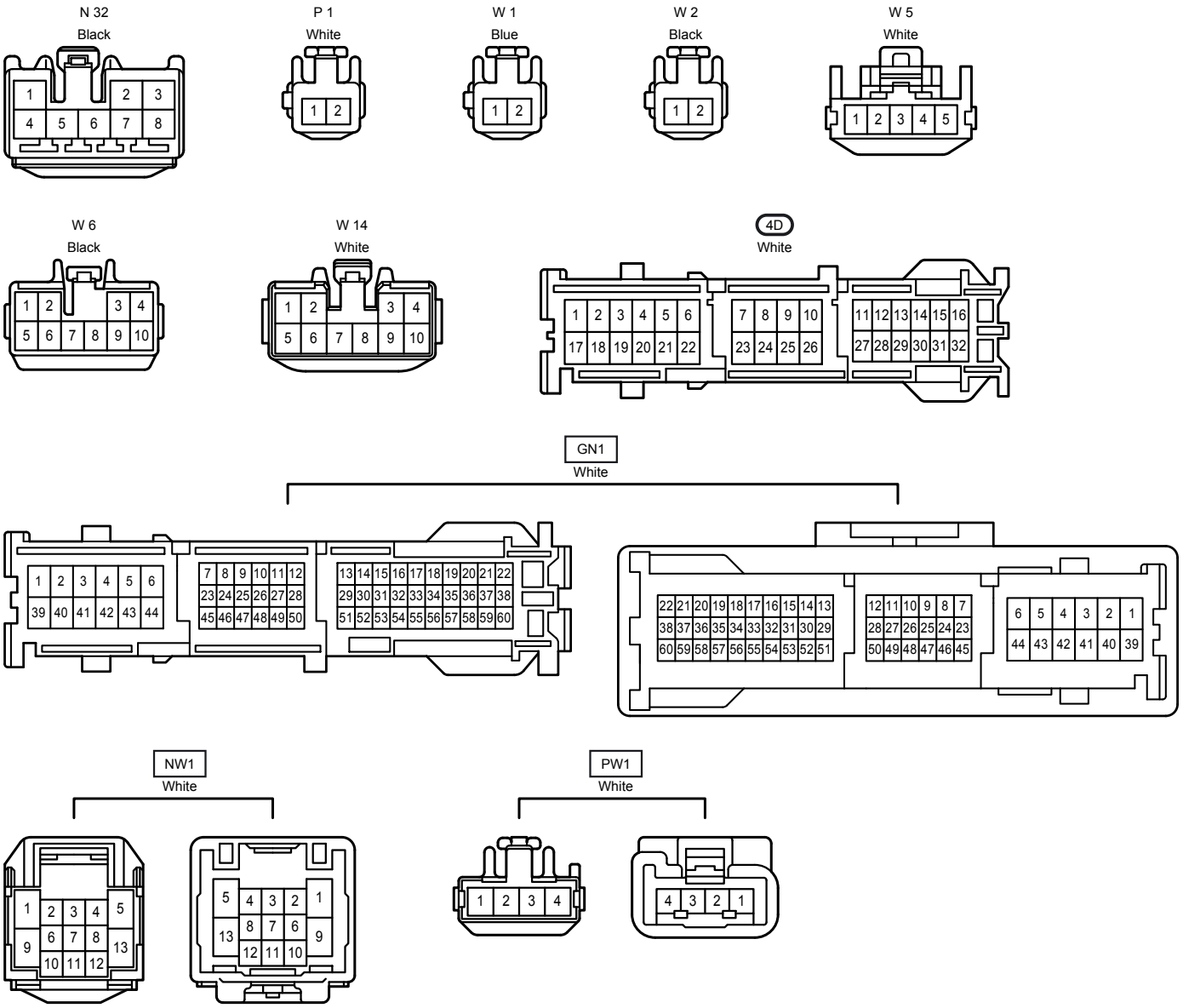
N 32
Black
P 1
White
W 1
Blue
W 2
Black
W 5
White
W 6
Black
W 14
White
4D
White
GN1
White
NW1
White
PW1
White