(Cont. next page)

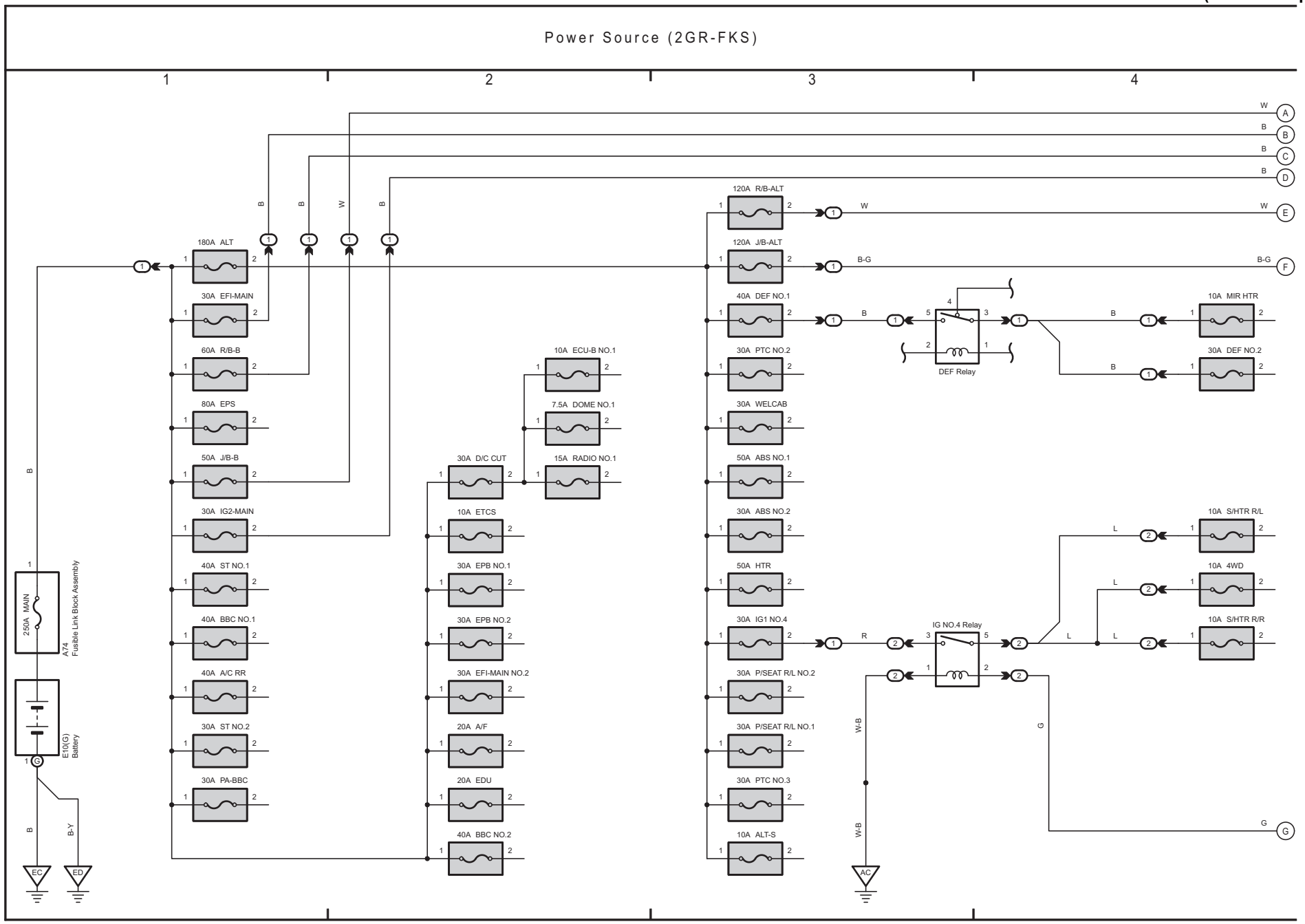

(Cont. next page)

Power Source (2GR-FKS)

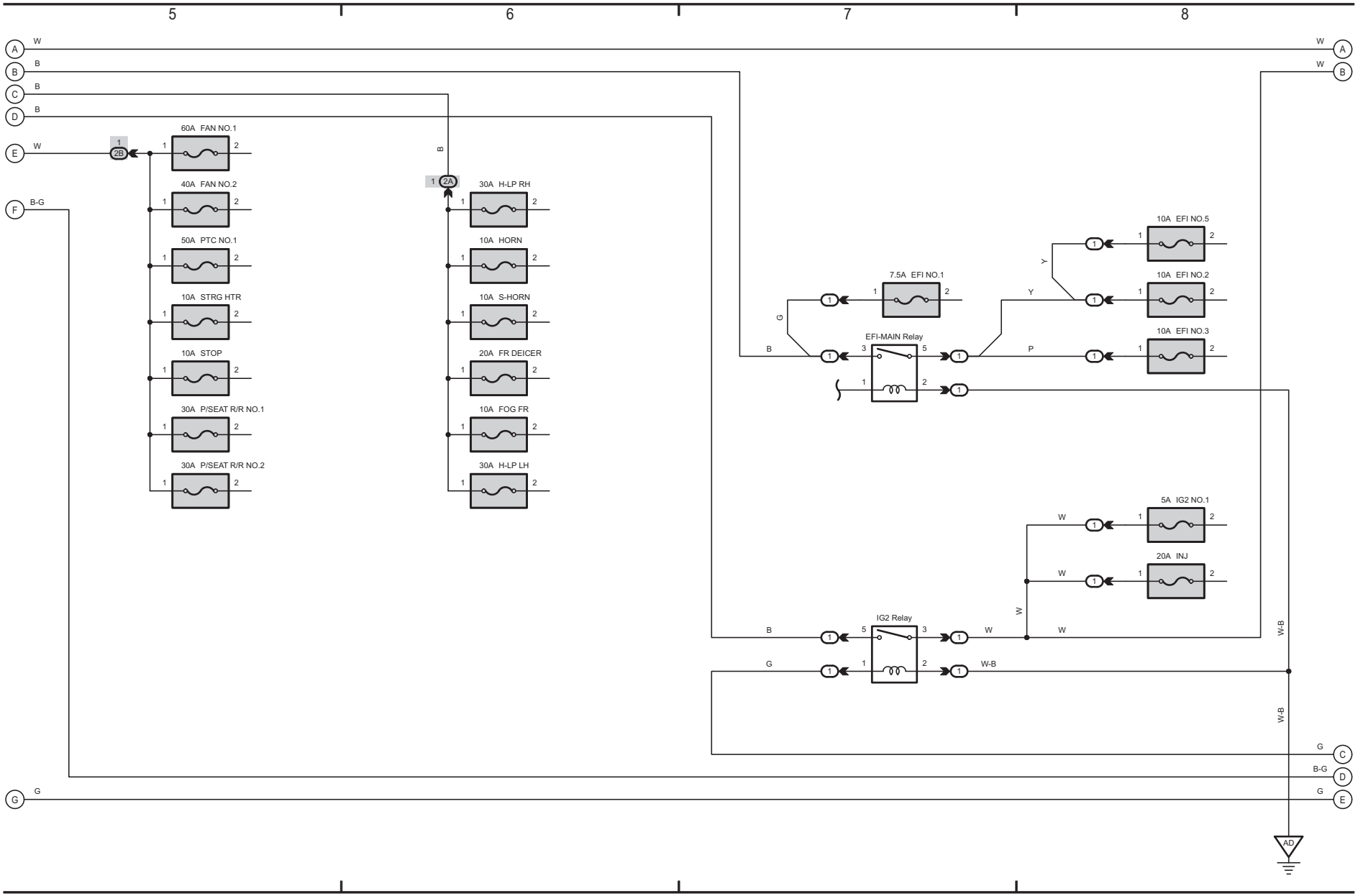

(Cont. next page)

Power Source (2GR-FKS)

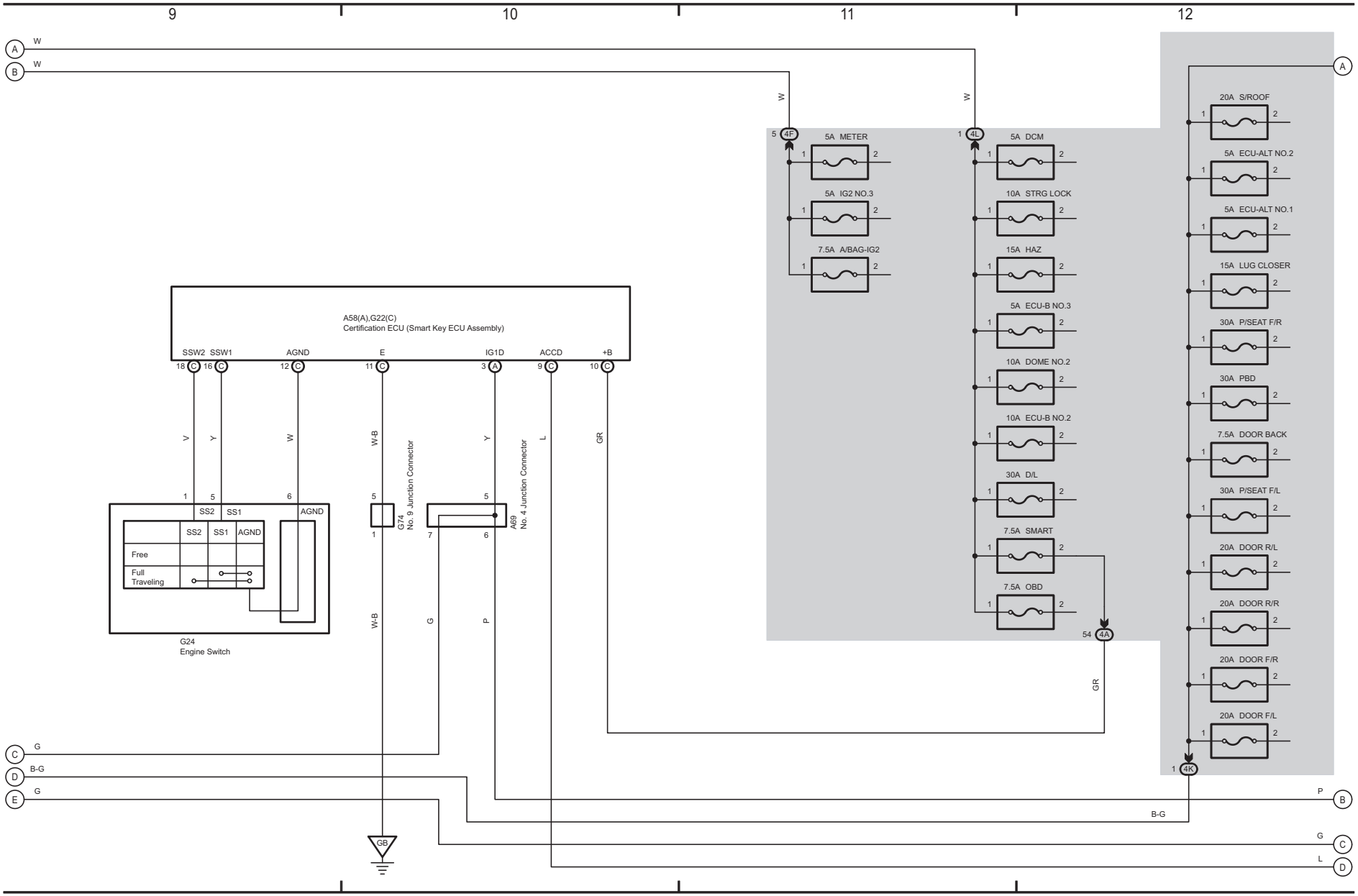

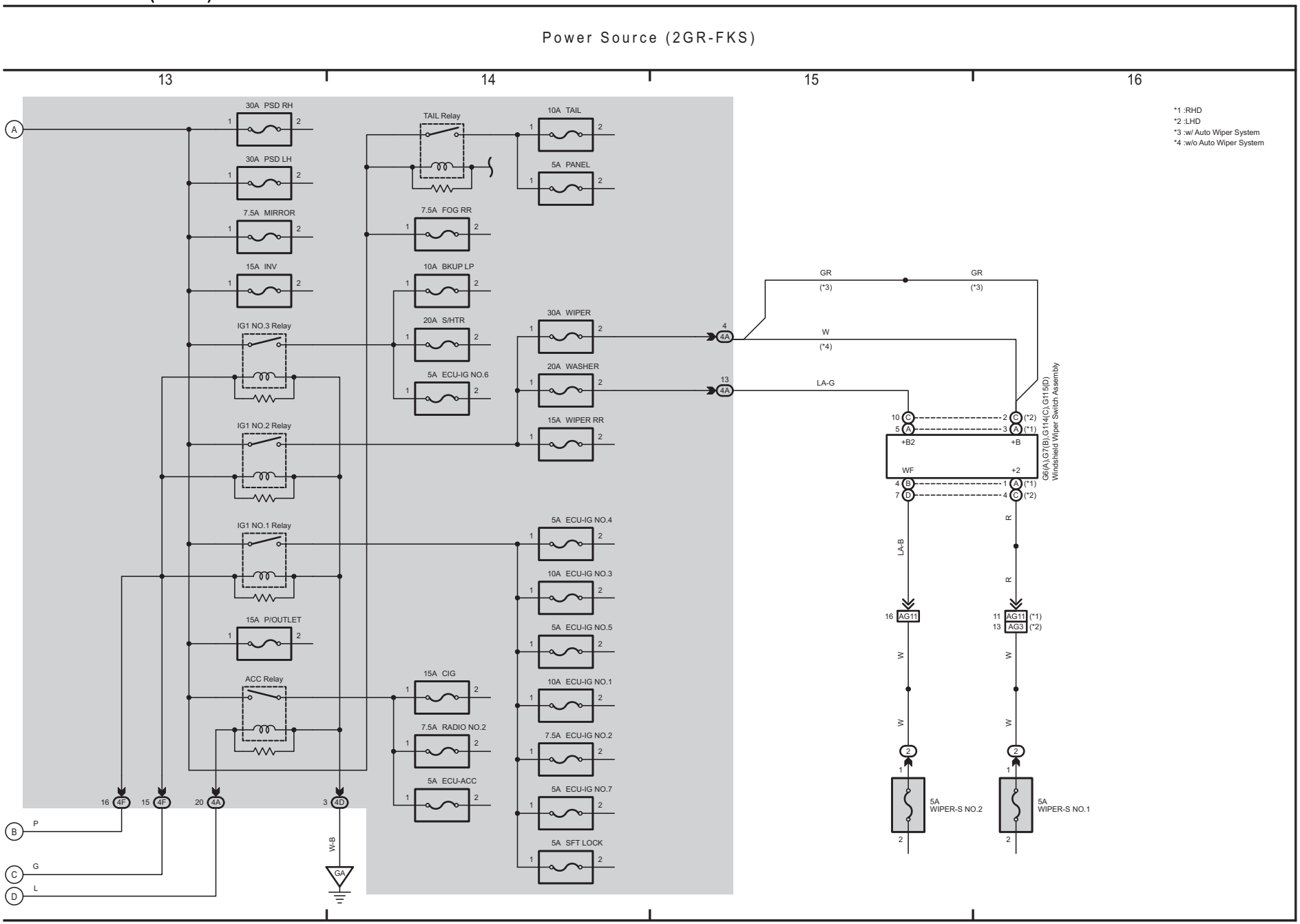
Power Source (2GR-FKS)
13
14
15
16
*1 :RHD
*2 :LHD
*3 :w/ Auto Wiper System
*4 :w/o Auto Wiper System
30A PSD RH
30A PSD LH
7.5A MIRROR
15A INV
IG1 NO.3 Relay
IG1 NO.2 Relay
IG1 NO.1 Relay
15A P/OUTLET
ACC Relay
TAIL Relay
7.5A FOG RR
10A BKUP LP
20A S/HTR
5A ECU-IG NO.6
15A CIG
7.5A RADIO NO.2
5A ECU-ACC
10A TAIL
5A PANEL
30A WIPER
20A WASHER
15A WIPER RR
5A ECU-IG NO.4
10A ECU-IG NO.3
5A ECU-IG NO.5
10A ECU-IG NO.1
7.5A ECU-IG NO.2
5A ECU-IG NO.7
5A SFT LOCK
GR
(*3)
W
(*4)
LA-G
+B2
+B
WF
+2
G6(A),G7(B),G114(C),G115(D)
Windshield Wiper Switch Assembly
LA-B
R
AG11
AG3
5A
WIPER-S NO.2
5A
WIPER-S NO.1
W-B
GA
P
G
L