(Cont. next page)

Audio System (Before Nov. 2011 Production),
Navigation System (Before Nov. 2011 Production)
and Parking Assist (Rear View Monitor) (Before Nov. 2011 Production)

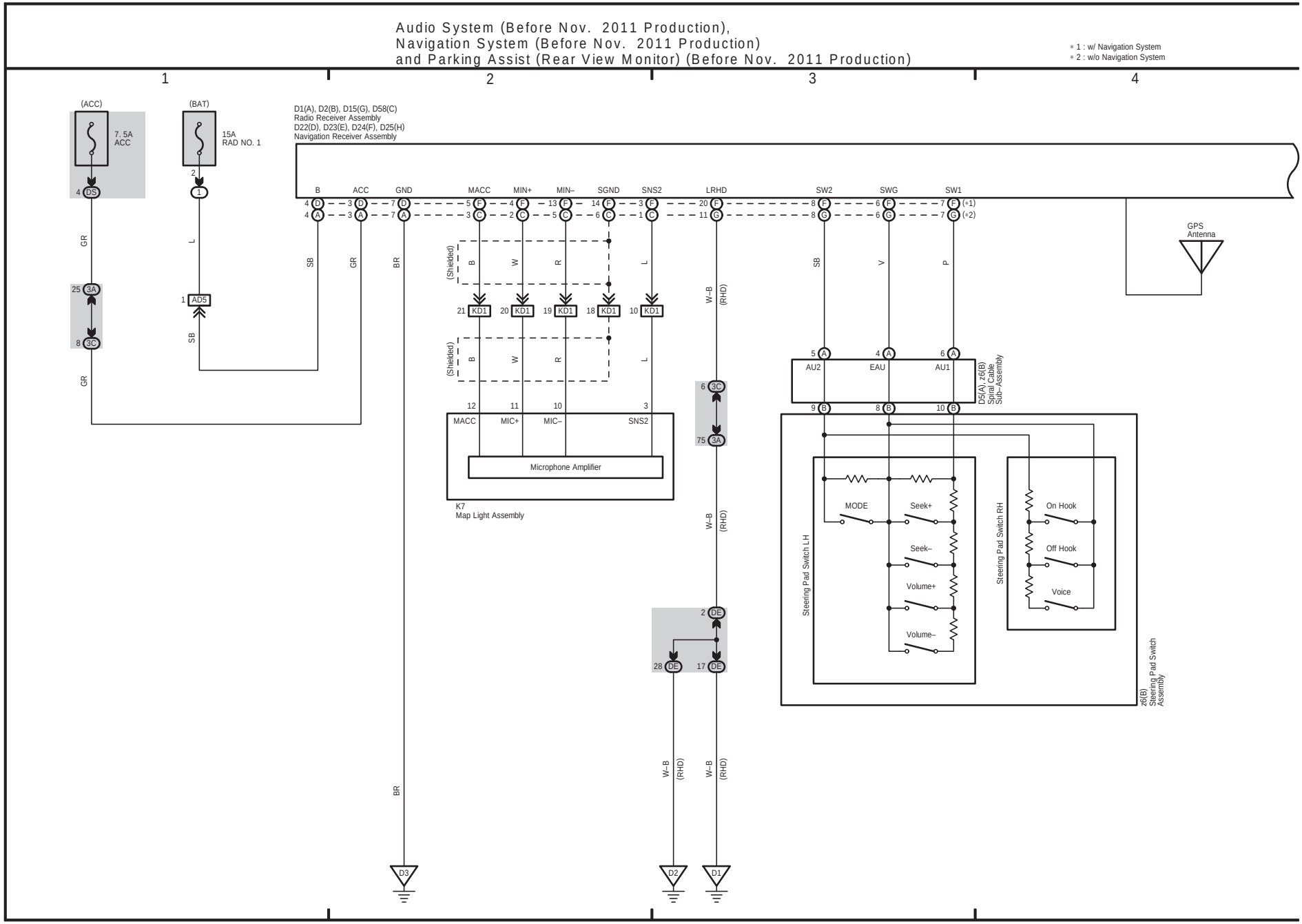

(Cont. next page)

Audio System (Before Nov. 2011 Production),
Navigation System (Before Nov. 2011 Production)
and Parking Assist (Rear View Monitor) (Before Nov. 2011 Production)

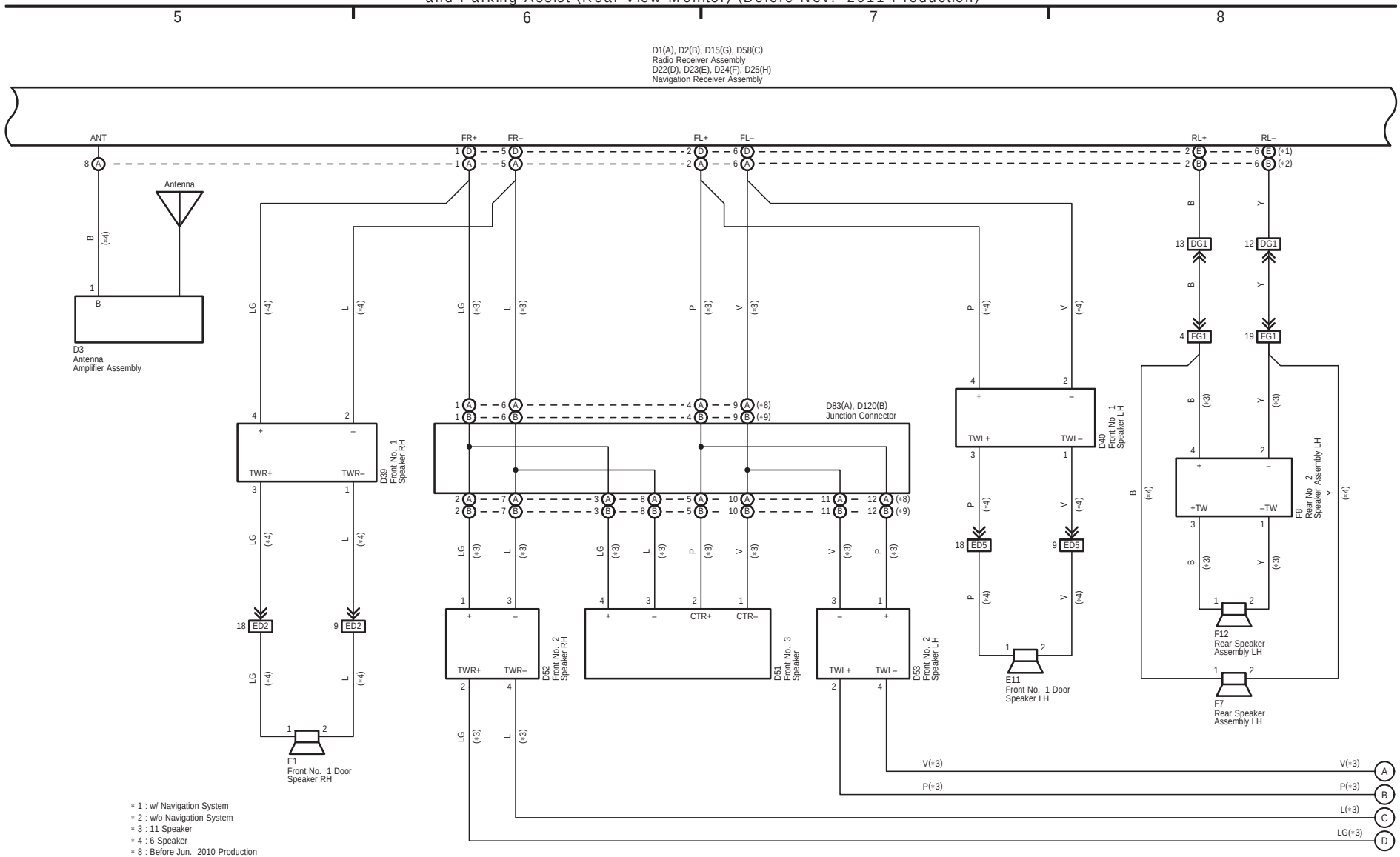

(Cont. next page)

Audio System (Before Nov. 2011 Production),
Navigation System (Before Nov. 2011 Production)
and Parking Assist (Rear View Monitor) (Before Nov. 2011 Production)

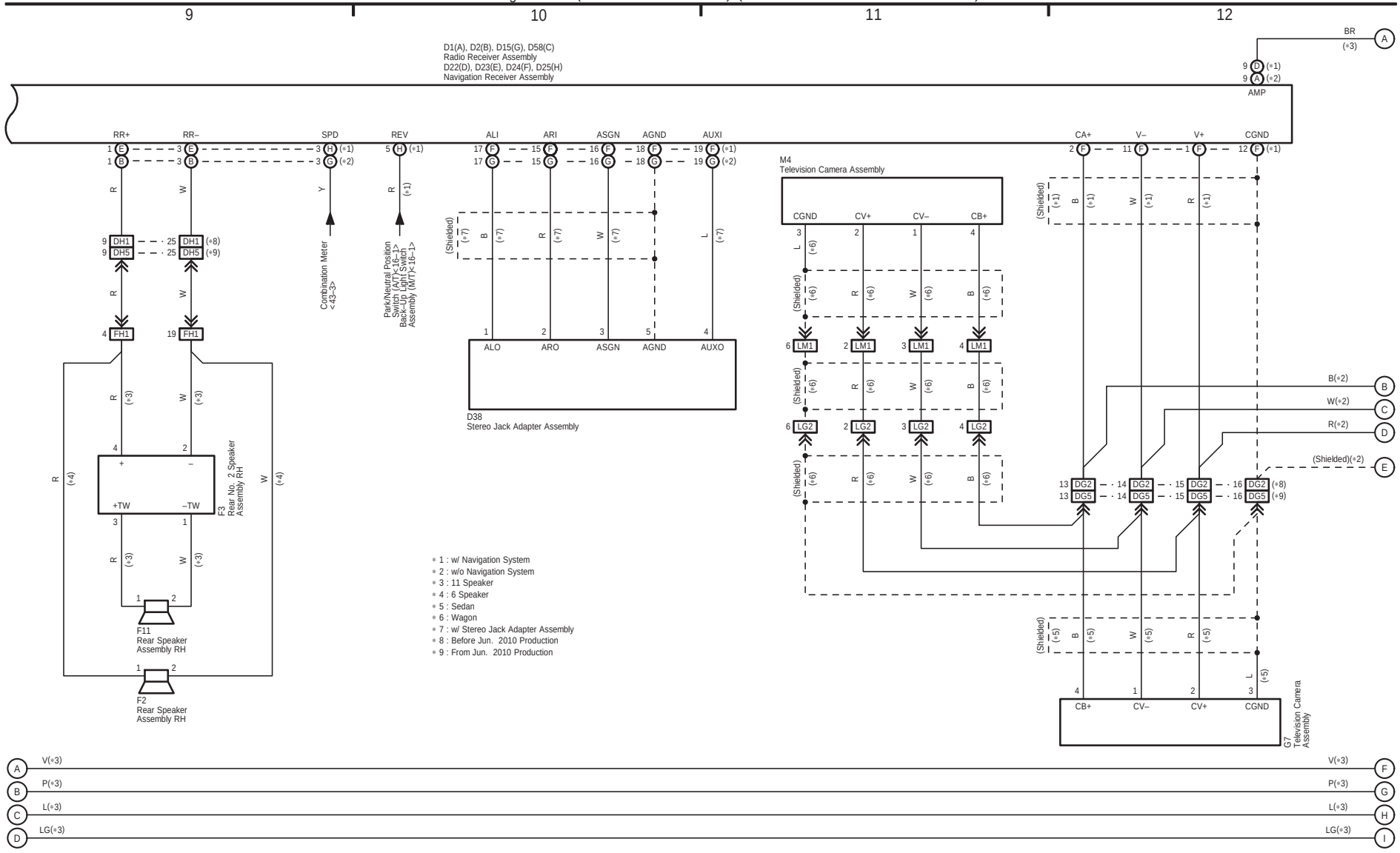
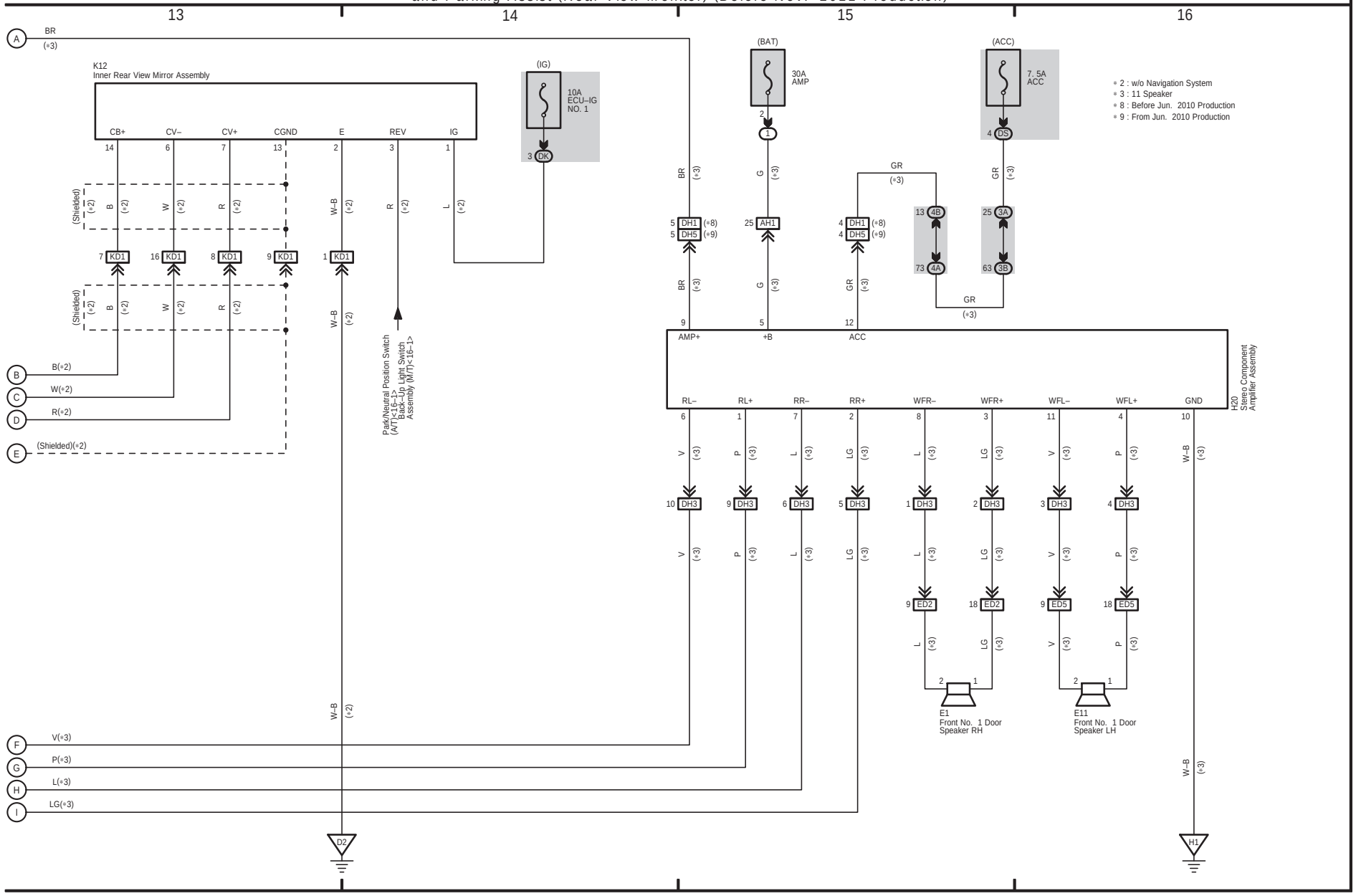
Audio System (Before Nov. 2011 Production),
Navigation System (Before Nov. 2011 Production)
and Parking Assist (Rear View Monitor) (Before Nov. 2011 Production)