[Junction Block No. 2 Inner Circuit]

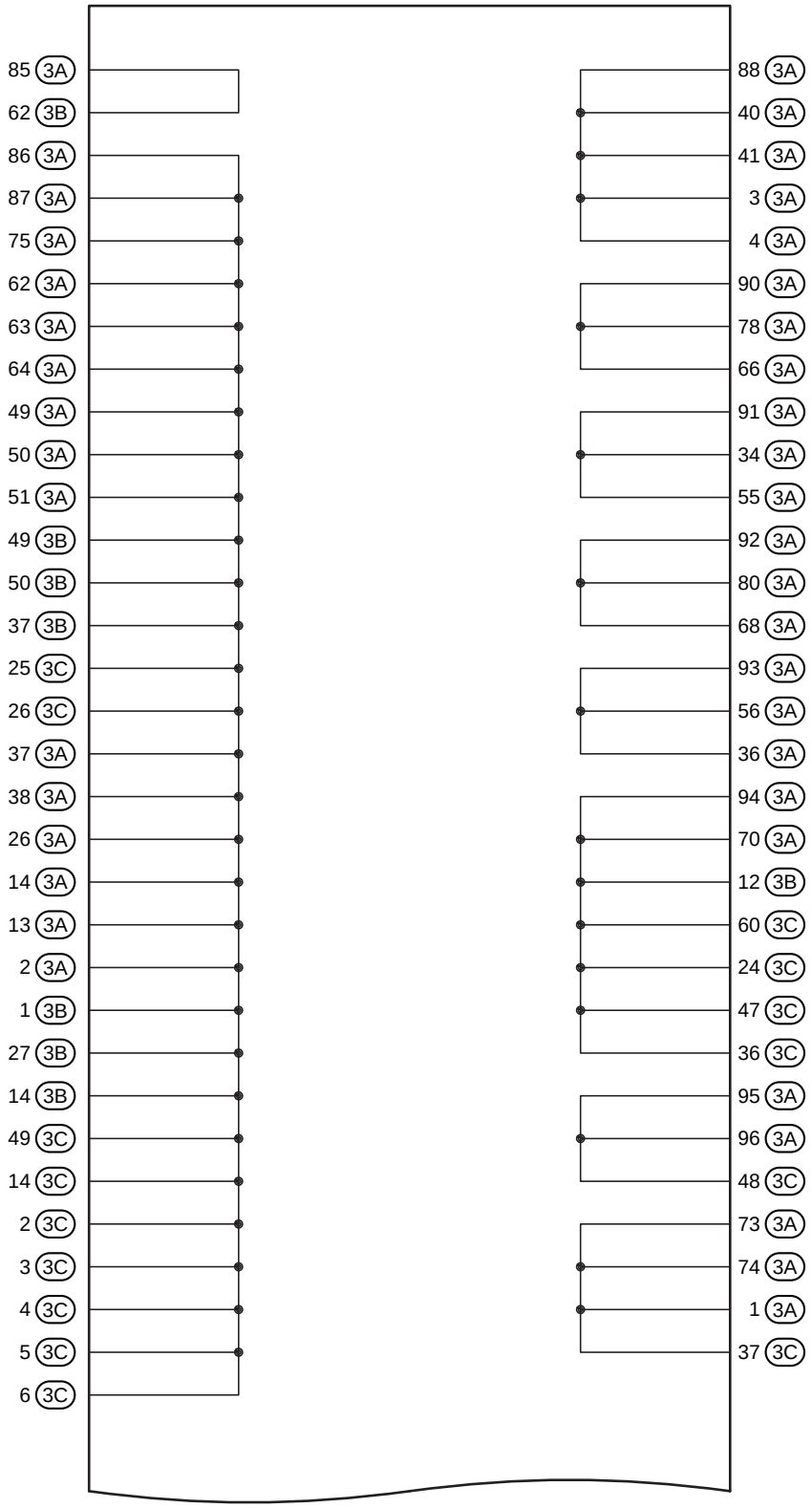

(Cont. Next Page)

(Cont'd)

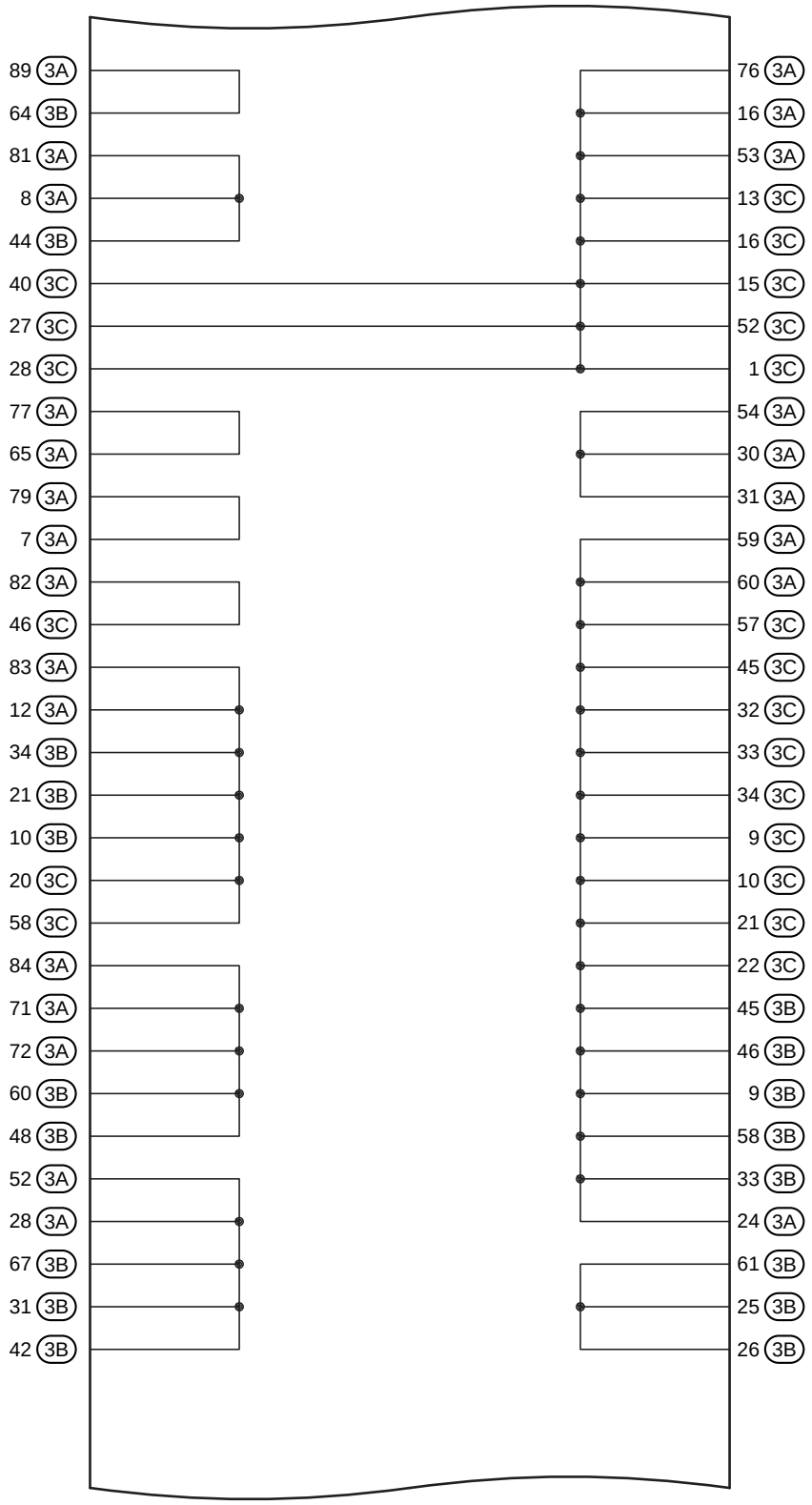

(Cont. Next Page)

[Junction Block No. 2 Inner Circuit]

(Cont'd)

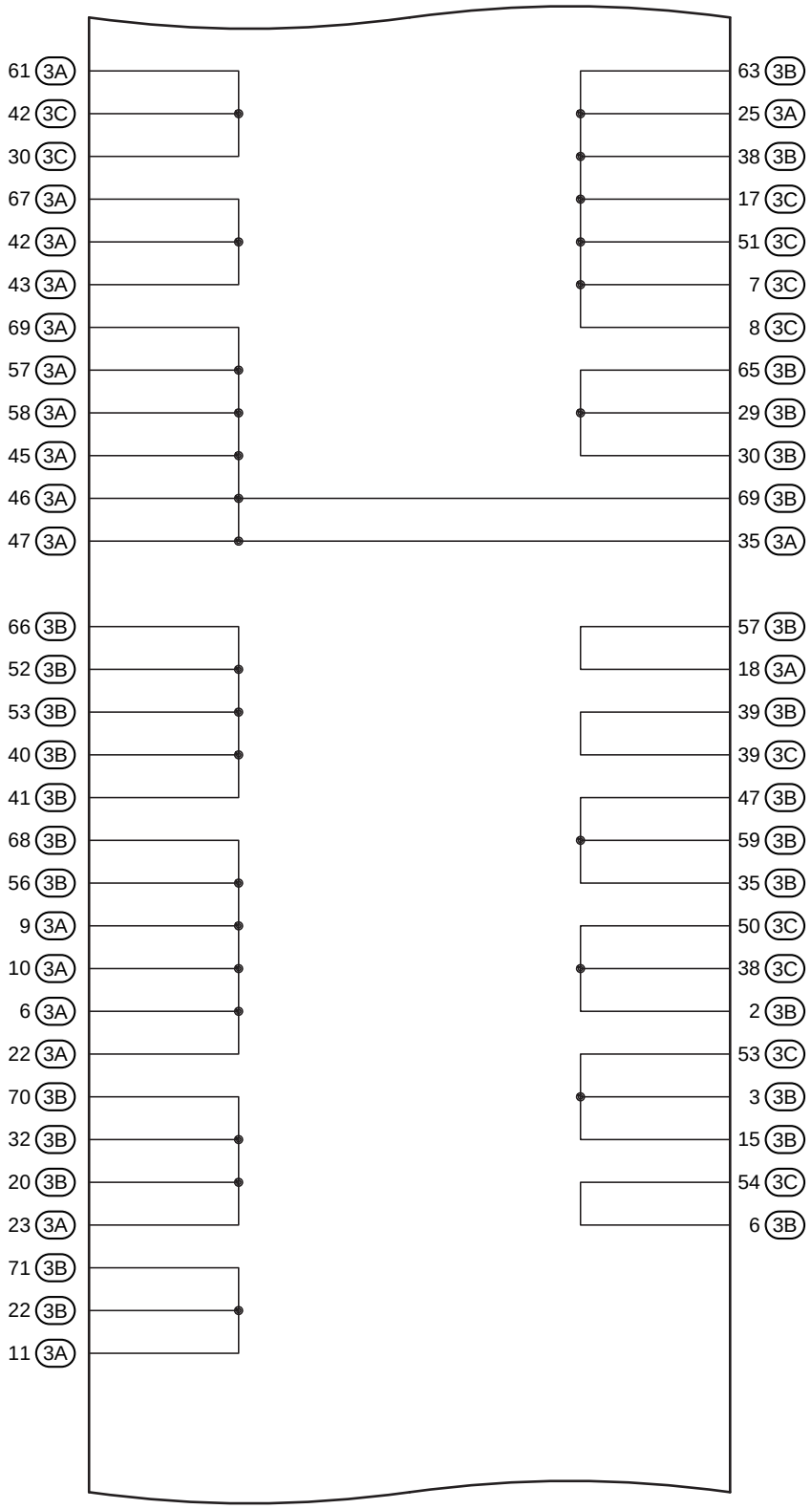

(Cont. Next Page)

(Cont'd)

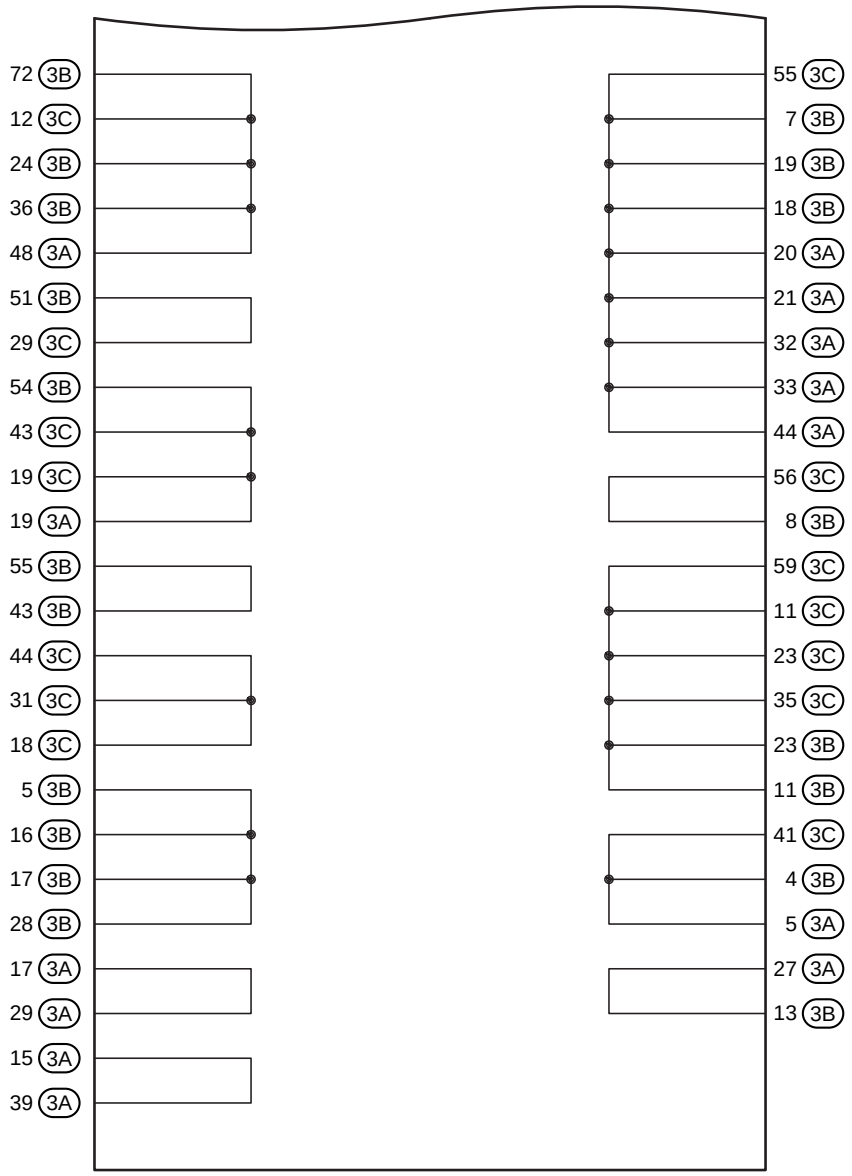
72 3B
12 3C
24 3B
36 3B
48 3A
51 3B
29 3C
54 3B
43 3C
19 3C
19 3A
55 3B
43 3B
44 3C
31 3C
18 3C
5 3B
16 3B
17 3B
28 3B
17 3A
29 3A
15 3A
39 3A
55 3C
7 3B
19 3B
18 3B
20 3A
21 3A
32 3A
33 3A
44 3A
56 3C
8 3B
59 3C
11 3C
23 3C
35 3C
23 3B
11 3B
41 3C
4 3B
5 3A
27 3A
13 3B