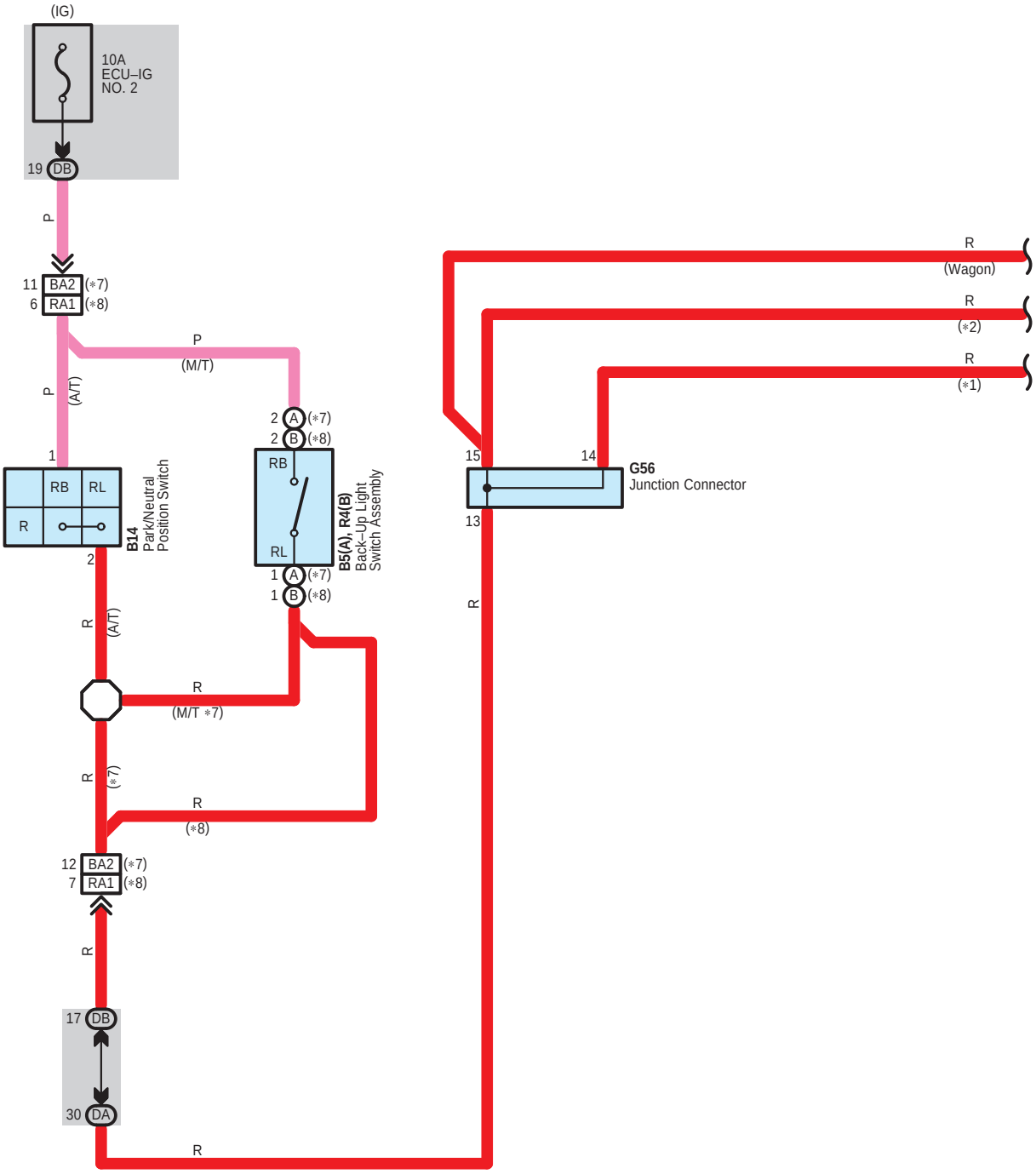
(IG)
10A
ECU–IG
NO. 2
19 DB
P
11 BA2 (*7)
6 RA1 (*8)
P
(M/T)
P
(A/T)
1
RB
RL
R
B14
Park/Neutral
Position Switch
2
2 A (*7)
2 B (*8)
RB
RL
1 A (*7)
1 B (*8)
B5(A), R4(B)
Back–Up Light
Switch Assembly
R
(A/T)
R
(M/T *7)
R
(*7)
R
(*8)
12 BA2 (*7)
7 RA1 (*8)
R
17 DB
30 DA
R
R
(Wagon)
R
(*2)
R
(*1)
15
14
G56
Junction Connector
13
R

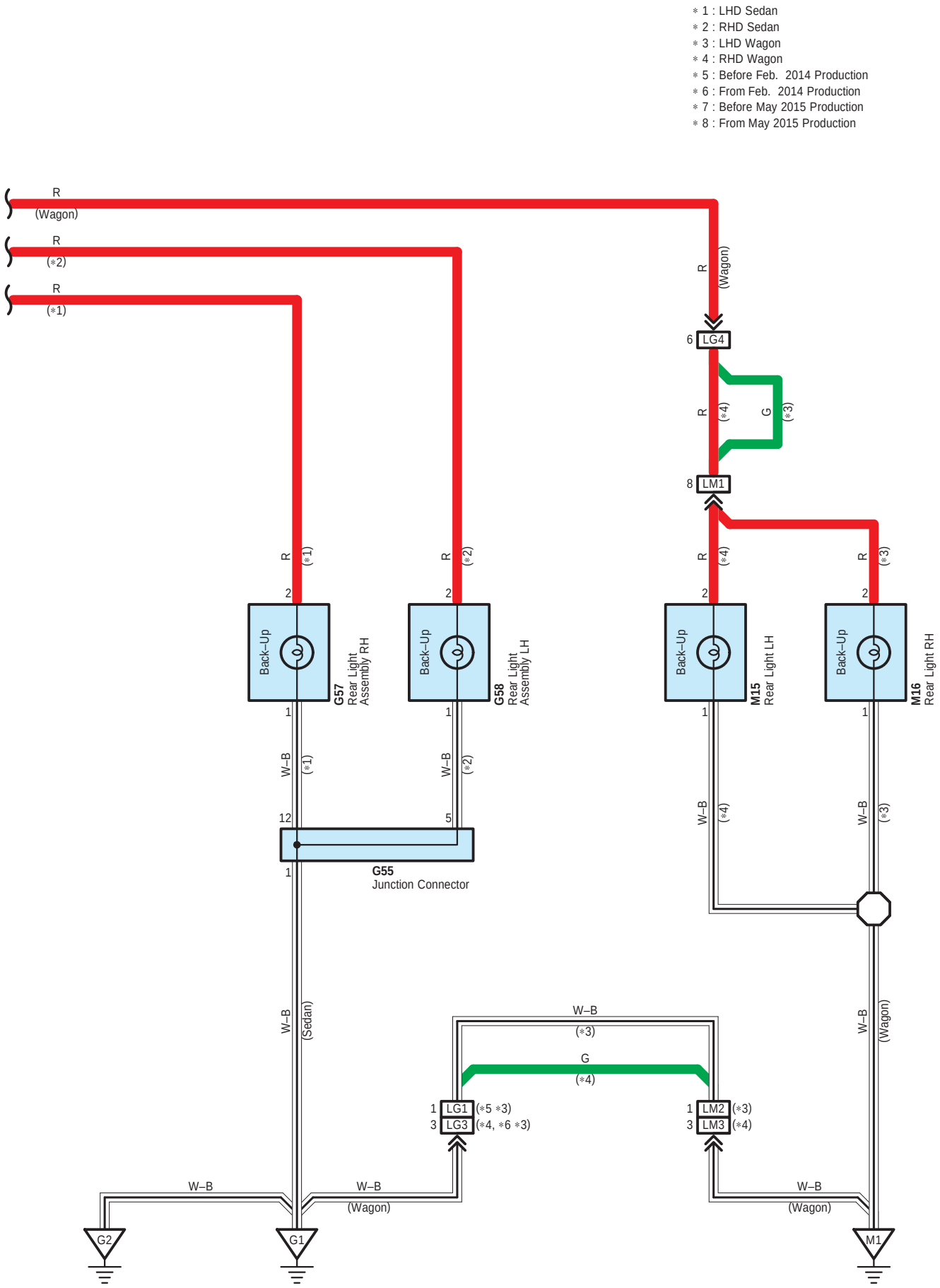
∗1 : LHD Sedan
∗2 : RHD Sedan
∗3 : LHD Wagon
∗4 : RHD Wagon
∗5 : Before Feb. 2014 Production
∗6 : From Feb. 2014 Production
∗7 : Before May 2015 Production
∗8 : From May 2015 Production
R (Wagon)
R (∗2)
R (∗1)
R (Wagon)
6 LG4
R (∗4)
G (∗3)
8 LM1
R (∗1)
R (∗2)
R (∗4)
R (∗3)
2
Back-Up
G57 Rear Light Assembly RH
G58 Rear Light Assembly LH
M15 Rear Light LH
M16 Rear Light RH
1
W–B (∗1)
W–B (∗2)
W–B (∗4)
W–B (∗3)
12
5
G55 Junction Connector
W–B (Sedan)
W–B (∗3)
G (∗4)
W–B (Wagon)
1 LG1 (∗5 ∗3)
3 LG3 (∗4, ∗6 ∗3)
1 LM2 (∗3)
3 LM3 (∗4)
W–B
W–B (Wagon)
G2
G1
M1

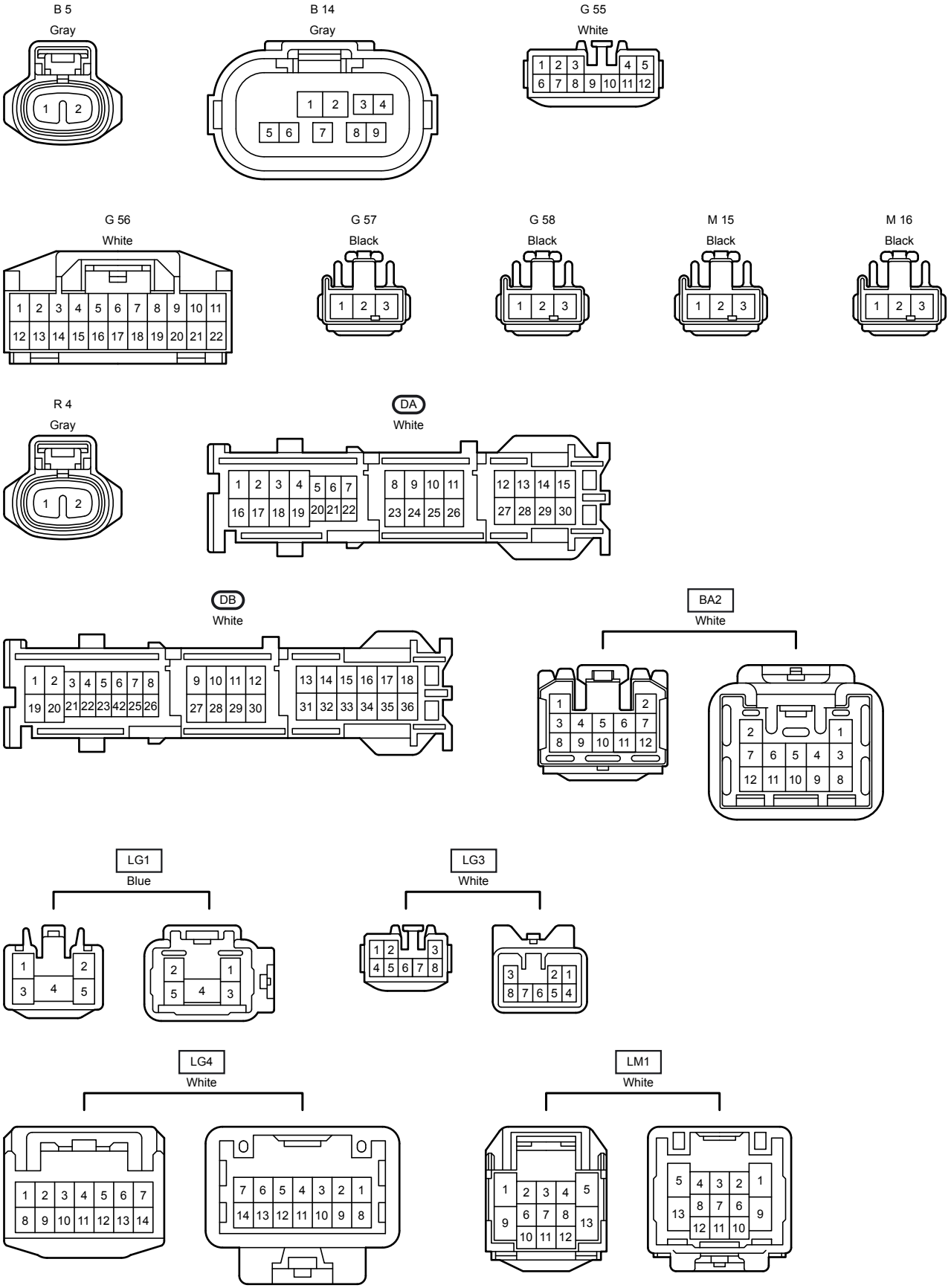
B 5
Gray
B 14
Gray
G 55
White
G 56
White
G 57
Black
G 58
Black
M 15
Black
M 16
Black
R 4
Gray
DA
White
DB
White
BA2
White
LG1
Blue
LG3
White
LG4
White
LM1
White

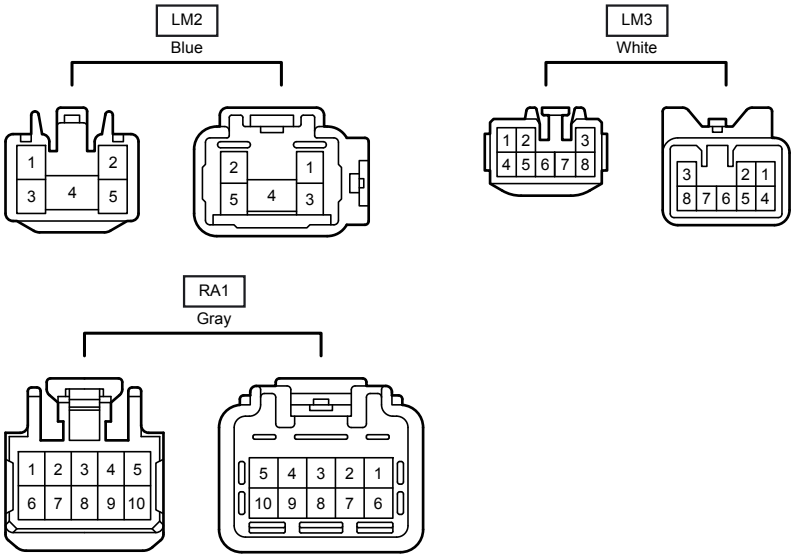
LM2
Blue
1
2
3
4
5
2
1
5
4
3
LM3
White
1
2
3
4
5
6
7
8
3
2
1
8
7
6
5
4
RA1
Gray
1
2
3
4
5
6
7
8
9
10
5
4
3
2
1
10
9
8
7
6