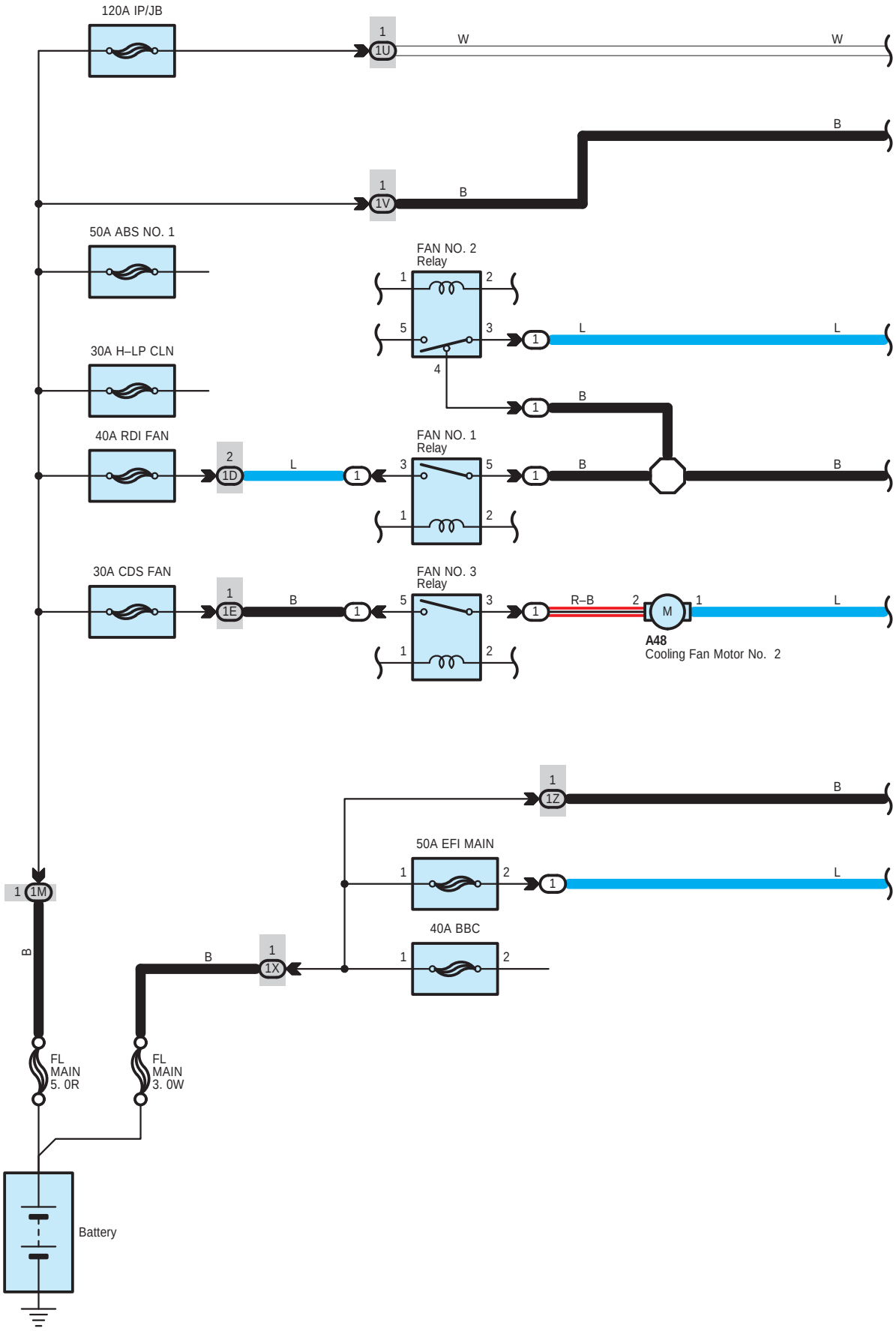
120A IP/JB
1
1U
W
W
B
1
1V
B
50A ABS NO. 1
FAN NO. 2
Relay
1
2
5
3
4
L
L
30A H–LP CLN
B
40A RDI FAN
2
1D
L
FAN NO. 1
Relay
3
5
1
2
B
B
30A CDS FAN
1
1E
B
FAN NO. 3
Relay
5
3
1
2
R–B
2
M
1
L
A48
Cooling Fan Motor No. 2
1
1Z
B
50A EFI MAIN
1
2
L
1
1M
B
40A BBC
1
2
B
1
1X
FL
MAIN
5. 0R
FL
MAIN
3. 0W
Battery

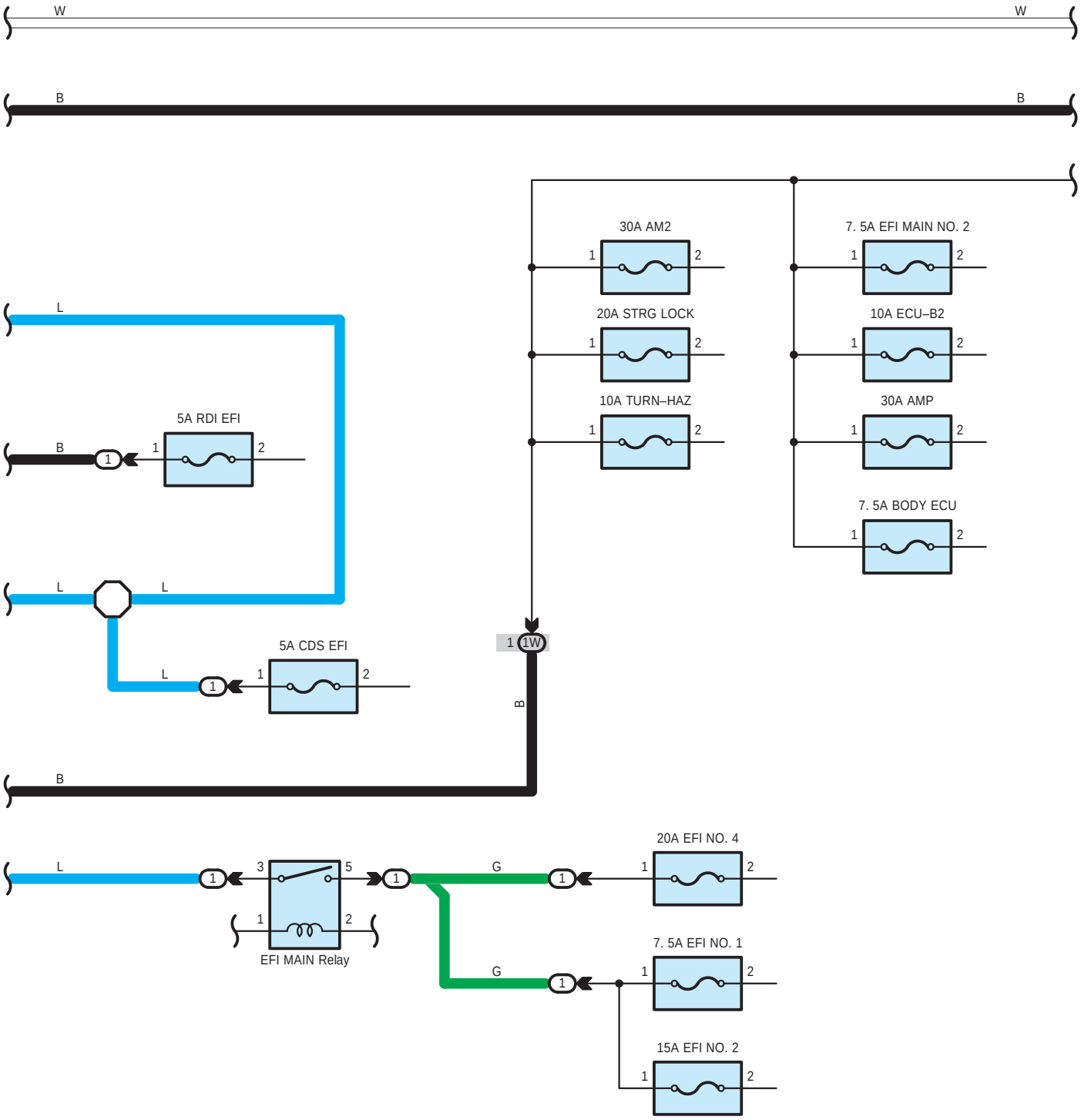
W
W
B
B
30A AM2
7. 5A EFI MAIN NO. 2
20A STRG LOCK
10A ECU–B2
10A TURN–HAZ
30A AMP
7. 5A BODY ECU
L
5A RDI EFI
B
L
L
5A CDS EFI
L
1 1W
B
B
20A EFI NO. 4
L
G
EFI MAIN Relay
7. 5A EFI NO. 1
G
15A EFI NO. 2

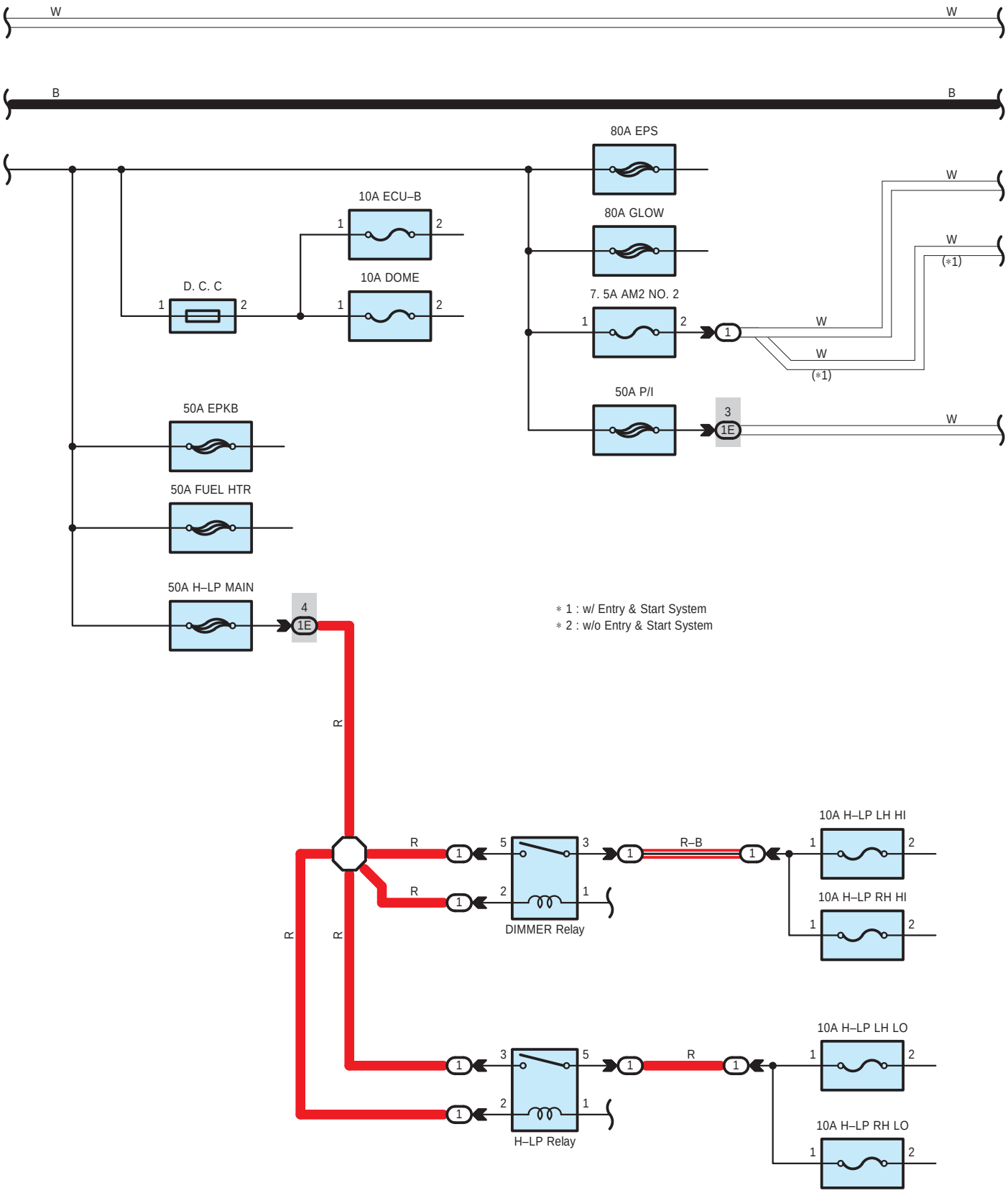
W
W
B
B
80A EPS
10A ECU–B
80A GLOW
D. C. C
10A DOME
7. 5A AM2 NO. 2
50A P/I
50A EPKB
50A FUEL HTR
50A H–LP MAIN
(*1)
(*1)
* 1 : w/ Entry & Start System
* 2 : w/o Entry & Start System
R–B
DIMMER Relay
10A H–LP LH HI
10A H–LP RH HI
H–LP Relay
10A H–LP LH LO
10A H–LP RH LO

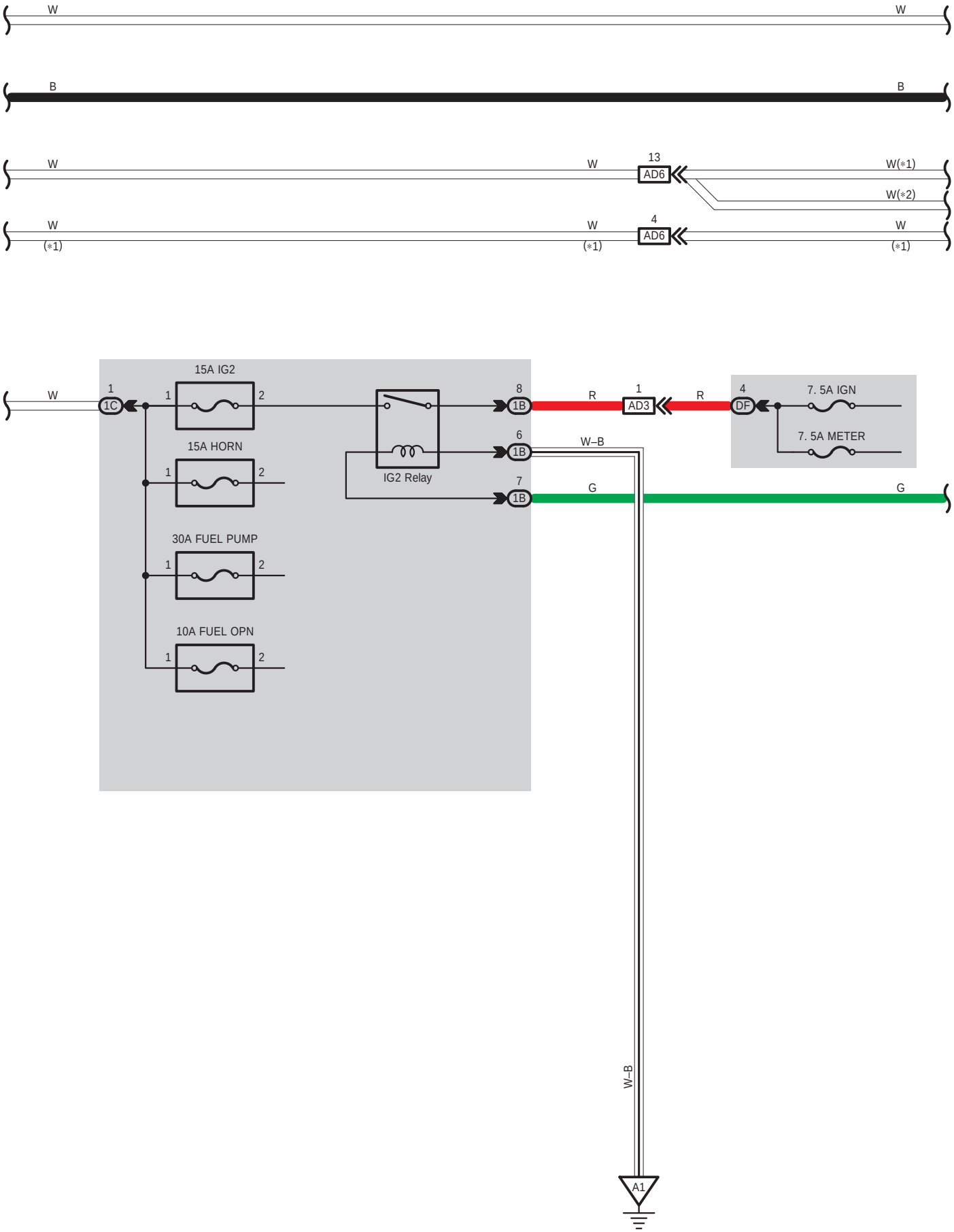
W
W
B
B
W
W
13
AD6
W(∗1)
W(∗2)
W
(∗1)
W
(∗1)
4
AD6
W
(∗1)
W
1
1C
15A IG2
1
2
15A HORN
1
2
30A FUEL PUMP
1
2
10A FUEL OPN
1
2
IG2 Relay
8
1B
6
1B
7
1B
R
1
AD3
R
4
DF
7. 5A IGN
7. 5A METER
W–B
G
G
W–B
A1

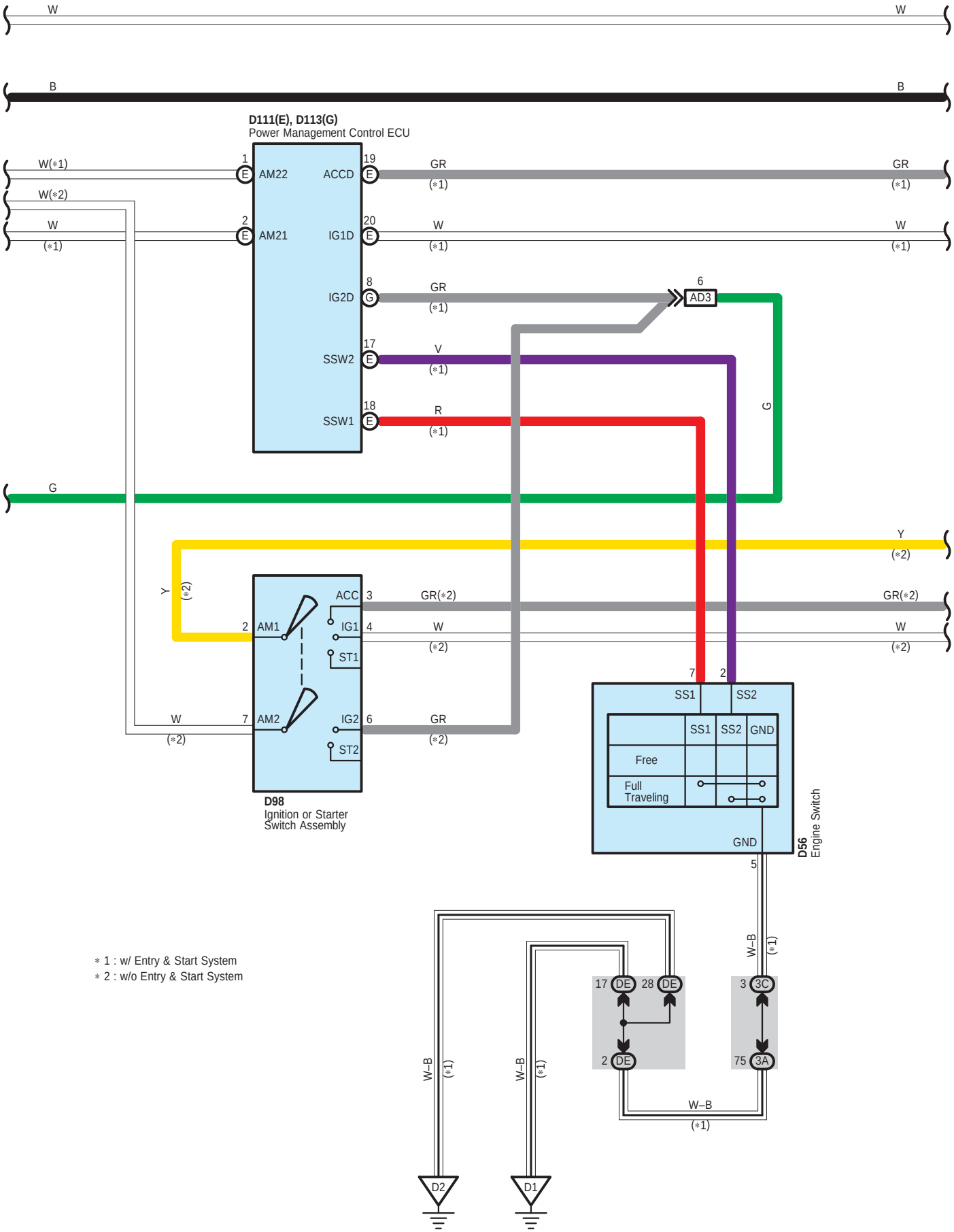

∗ 1 : w/ Entry & Start System
∗ 2 : w/o Entry & Start System

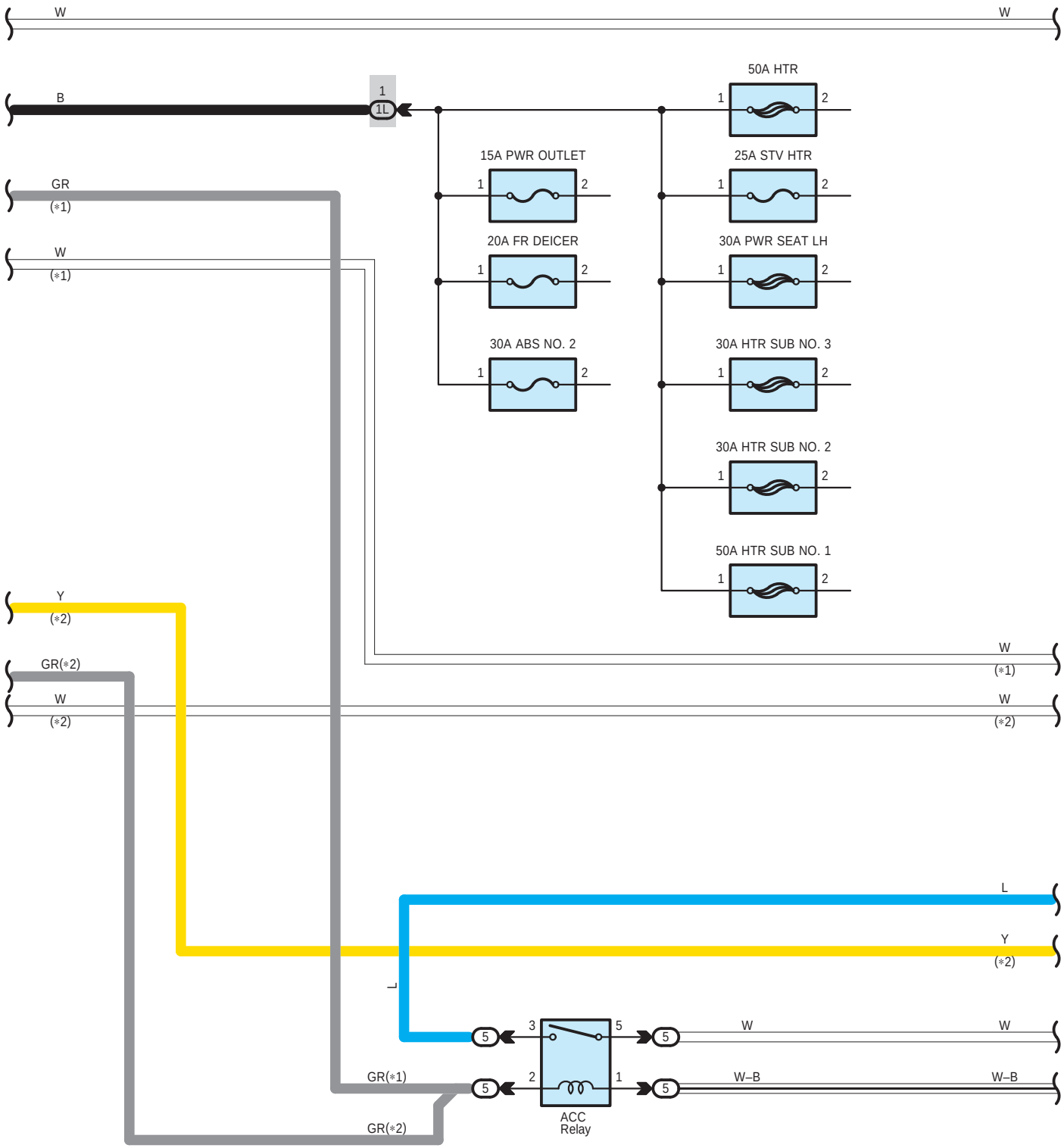
W
W
B
1
1L
50A HTR
1
2
15A PWR OUTLET
1
2
25A STV HTR
1
2
GR
(*1)
W
(*1)
20A FR DEICER
1
2
30A PWR SEAT LH
1
2
30A ABS NO. 2
1
2
30A HTR SUB NO. 3
1
2
30A HTR SUB NO. 2
1
2
50A HTR SUB NO. 1
1
2
Y
(*2)
GR(*2)
W
(*2)
W
(*1)
W
(*2)
L
Y
(*2)
L
5
3
5
5
W
W
GR(*1)
5
2
1
5
W–B
W–B
GR(*2)
ACC
Relay

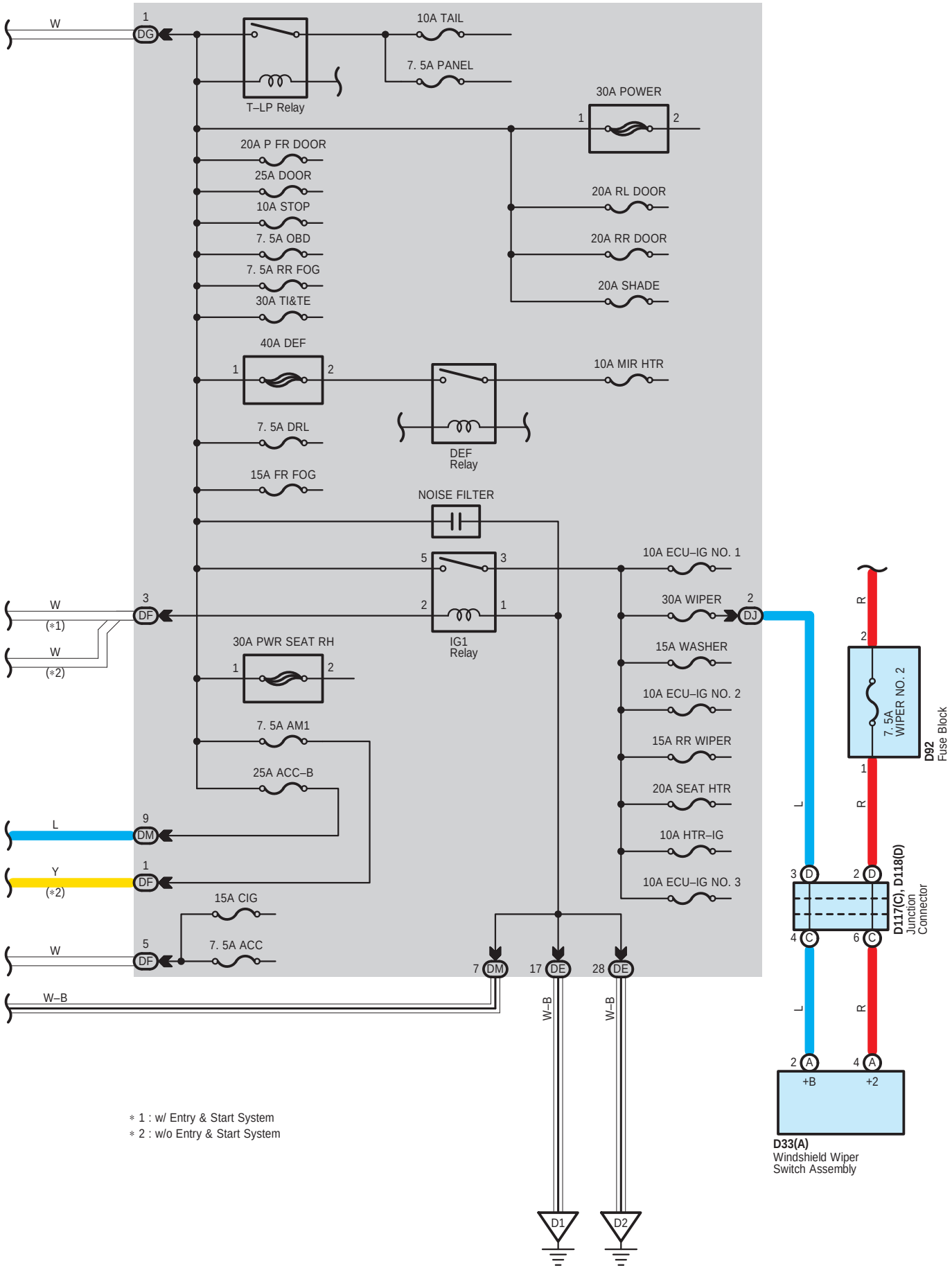
W
1
DG
T–LP Relay
10A TAIL
7. 5A PANEL
30A POWER
1
2
20A P FR DOOR
25A DOOR
10A STOP
7. 5A OBD
7. 5A RR FOG
30A TI&TE
20A RL DOOR
20A RR DOOR
20A SHADE
40A DEF
1
2
10A MIR HTR
7. 5A DRL
DEF
Relay
15A FR FOG
NOISE FILTER
5
3
10A ECU–IG NO. 1
W
(*1)
3
DF
2
1
30A WIPER
2
DJ
W
(*2)
IG1
Relay
30A PWR SEAT RH
1
2
15A WASHER
10A ECU–IG NO. 2
7. 5A AM1
15A RR WIPER
25A ACC–B
20A SEAT HTR
L
9
DM
10A HTR–IG
Y
(*2)
1
DF
10A ECU–IG NO. 3
15A CIG
W
5
DF
7. 5A ACC
7
DM
17
DE
28
DE
W–B
W–B
W–B
R
2
7. 5A
WIPER NO. 2
D92
Fuse Block
1
L
R
3
D
2
D
D117(C), D118(D)
Junction
Connector
4
C
6
C
L
R
2
A
4
A
+B
+2
D33(A)
Windshield Wiper
Switch Assembly
D1
D2
* 1 : w/ Entry & Start System
* 2 : w/o Entry & Start System

A 48
Black

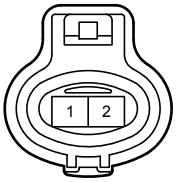

D 33
White

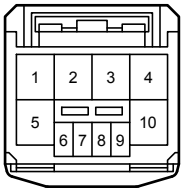

D 56
Black

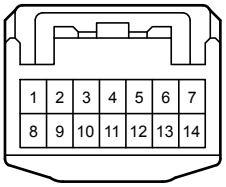

D 92

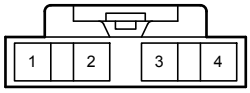

D 98
White

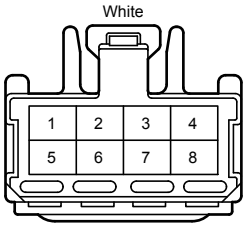

D111
Gray

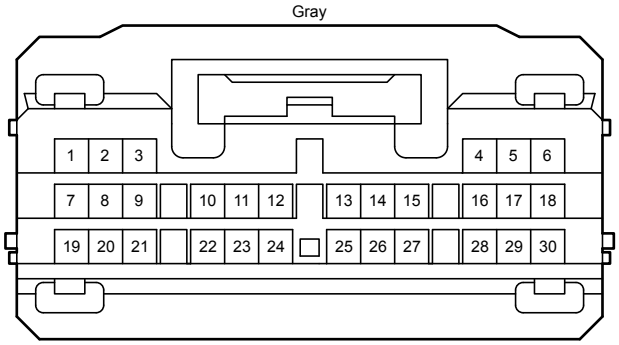

D113
Gray

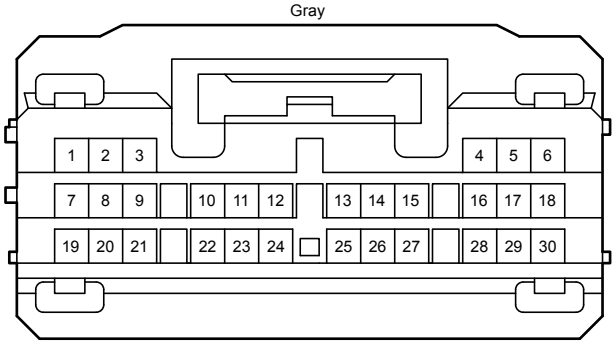

D117
White

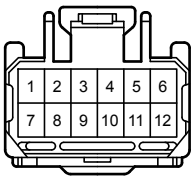

D118
White

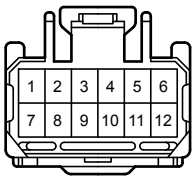

1B
White

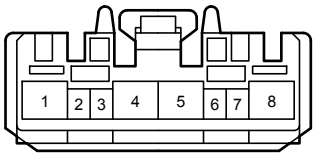

1C
White

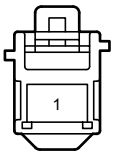

1D
White

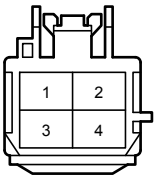

1E
White

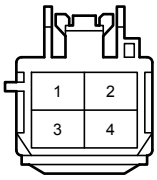

1L
White

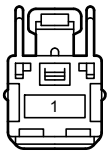

1M

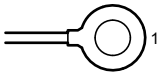

1U

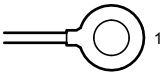

1V

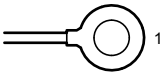

1W

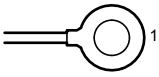

1X

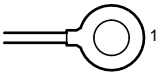

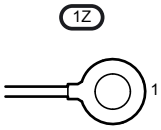
1Z
1

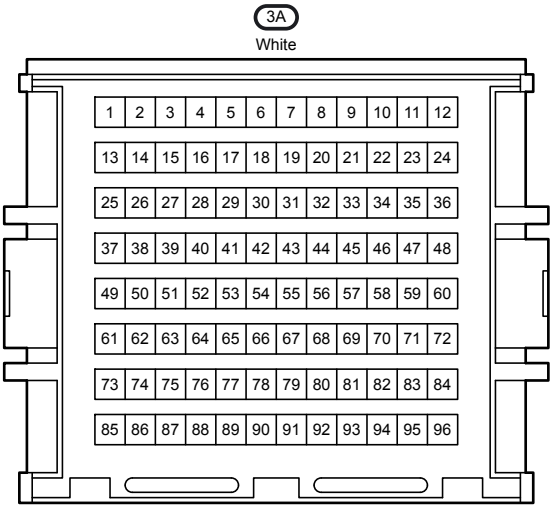
3A
White
1 2 3 4 5 6 7 8 9 10 11 12
13 14 15 16 17 18 19 20 21 22 23 24
25 26 27 28 29 30 31 32 33 34 35 36
37 38 39 40 41 42 43 44 45 46 47 48
49 50 51 52 53 54 55 56 57 58 59 60
61 62 63 64 65 66 67 68 69 70 71 72
73 74 75 76 77 78 79 80 81 82 83 84
85 86 87 88 89 90 91 92 93 94 95 96

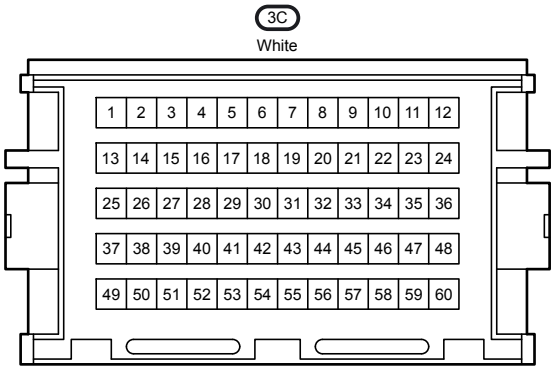
3C
White
1 2 3 4 5 6 7 8 9 10 11 12
13 14 15 16 17 18 19 20 21 22 23 24
25 26 27 28 29 30 31 32 33 34 35 36
37 38 39 40 41 42 43 44 45 46 47 48
49 50 51 52 53 54 55 56 57 58 59 60

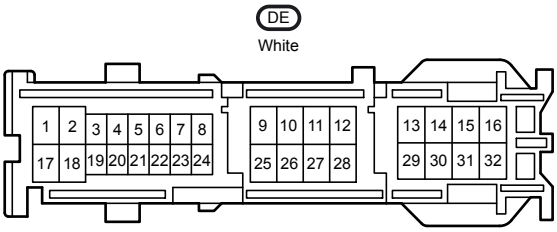
DE
White
1 2 3 4 5 6 7 8
17 18 19 20 21 22 23 24
9 10 11 12
25 26 27 28
13 14 15 16
29 30 31 32

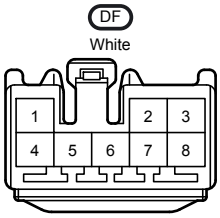
DF
White
1 2 3
4 5 6 7 8

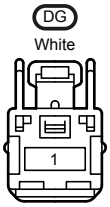
DG
White
1

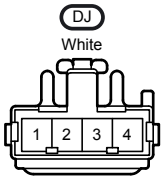
DJ
White
1 2 3 4

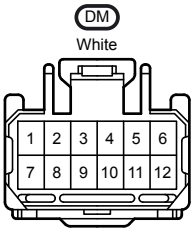
DM
White
1 2 3 4 5 6
7 8 9 10 11 12

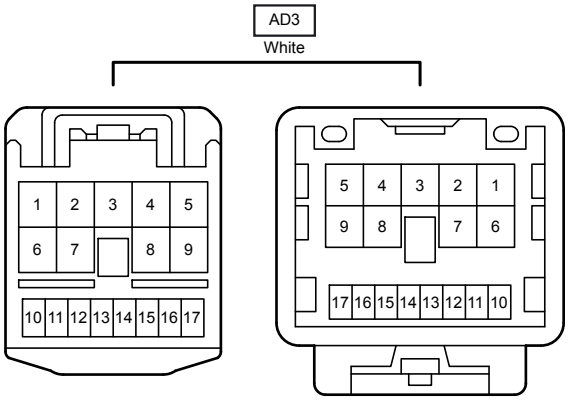
AD3
White
1 2 3 4 5
6 7 8 9
10 11 12 13 14 15 16 17
5 4 3 2 1
9 8 7 6
17 16 15 14 13 12 11 10

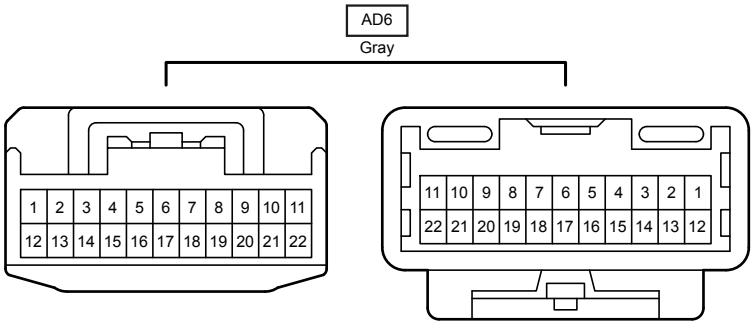
AD6
Gray
1 2 3 4 5 6 7 8 9 10 11
12 13 14 15 16 17 18 19 20 21 22
11 10 9 8 7 6 5 4 3 2 1
22 21 20 19 18 17 16 15 14 13 12