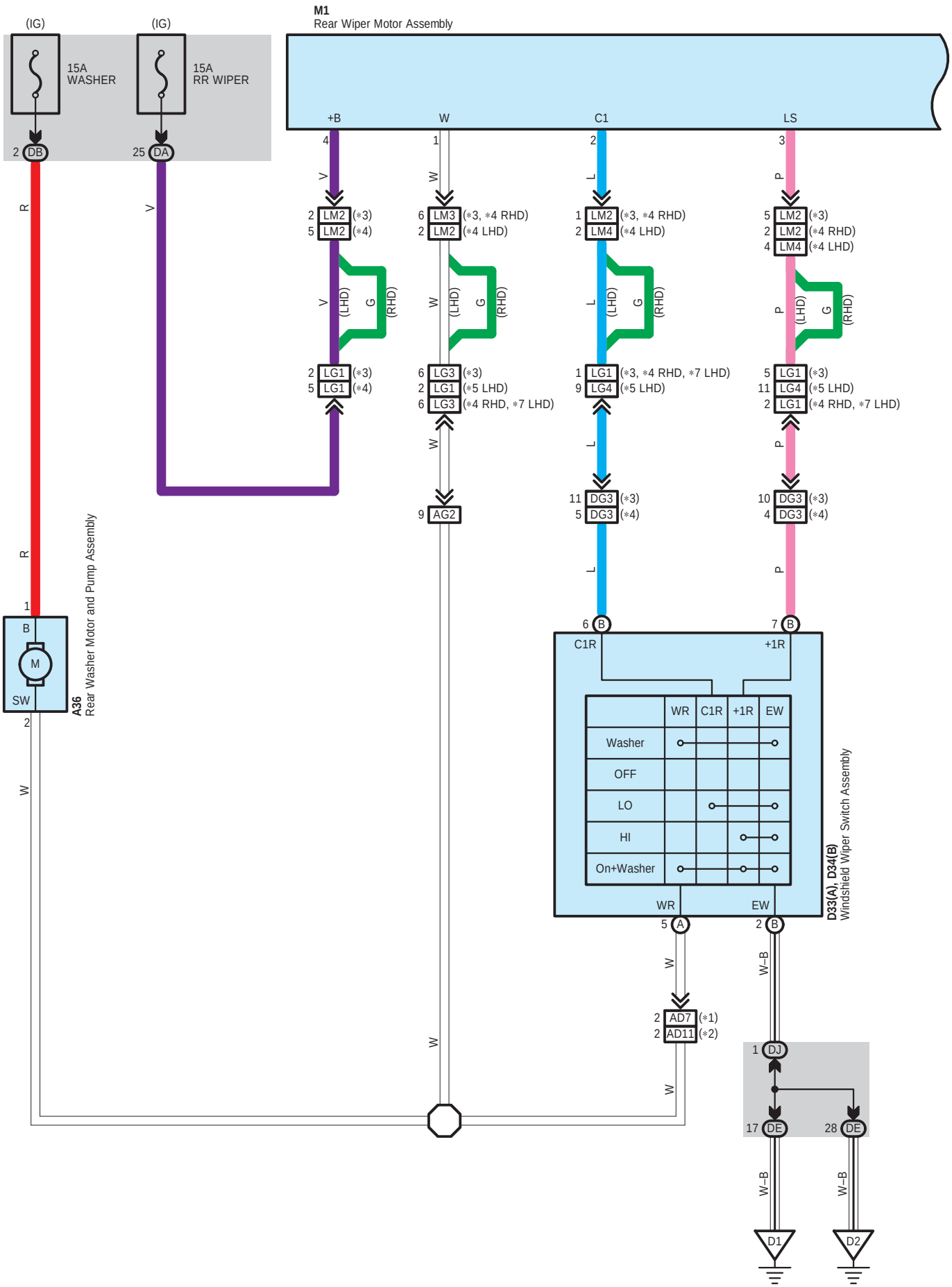
(IG)
(IG)
15A
WASHER
15A
RR WIPER
2 DB
25 DA
M1
Rear Wiper Motor Assembly
+B
W
C1
LS
4
1
2
3
2 LM2 (*3)
5 LM2 (*4)
6 LM3 (*3, *4 RHD)
2 LM2 (*4 LHD)
1 LM2 (*3, *4 RHD)
2 LM4 (*4 LHD)
5 LM2 (*3)
2 LM2 (*4 RHD)
4 LM4 (*4 LHD)
(LHD)
G
(RHD)
2 LG1 (*3)
5 LG1 (*4)
6 LG3 (*3)
2 LG1 (*5 LHD)
6 LG3 (*4 RHD, *7 LHD)
1 LG1 (*3, *4 RHD, *7 LHD)
9 LG4 (*5 LHD)
5 LG1 (*3)
11 LG4 (*5 LHD)
2 LG1 (*4 RHD, *7 LHD)
9 AG2
11 DG3 (*3)
5 DG3 (*4)
10 DG3 (*3)
4 DG3 (*4)
6 B
7 B
C1R
+1R
WR
C1R
+1R
EW
Washer
OFF
LO
HI
On+Washer
WR
EW
5 A
2 B
D33(A), D34(B)
Windshield Wiper Switch Assembly
2 AD7 (*1)
2 AD11 (*2)
1 DJ
17 DE
28 DE
D1
D2
1
B
M
SW
2
A36
Rear Washer Motor and Pump Assembly
R
V
W
L
P
G
W–B

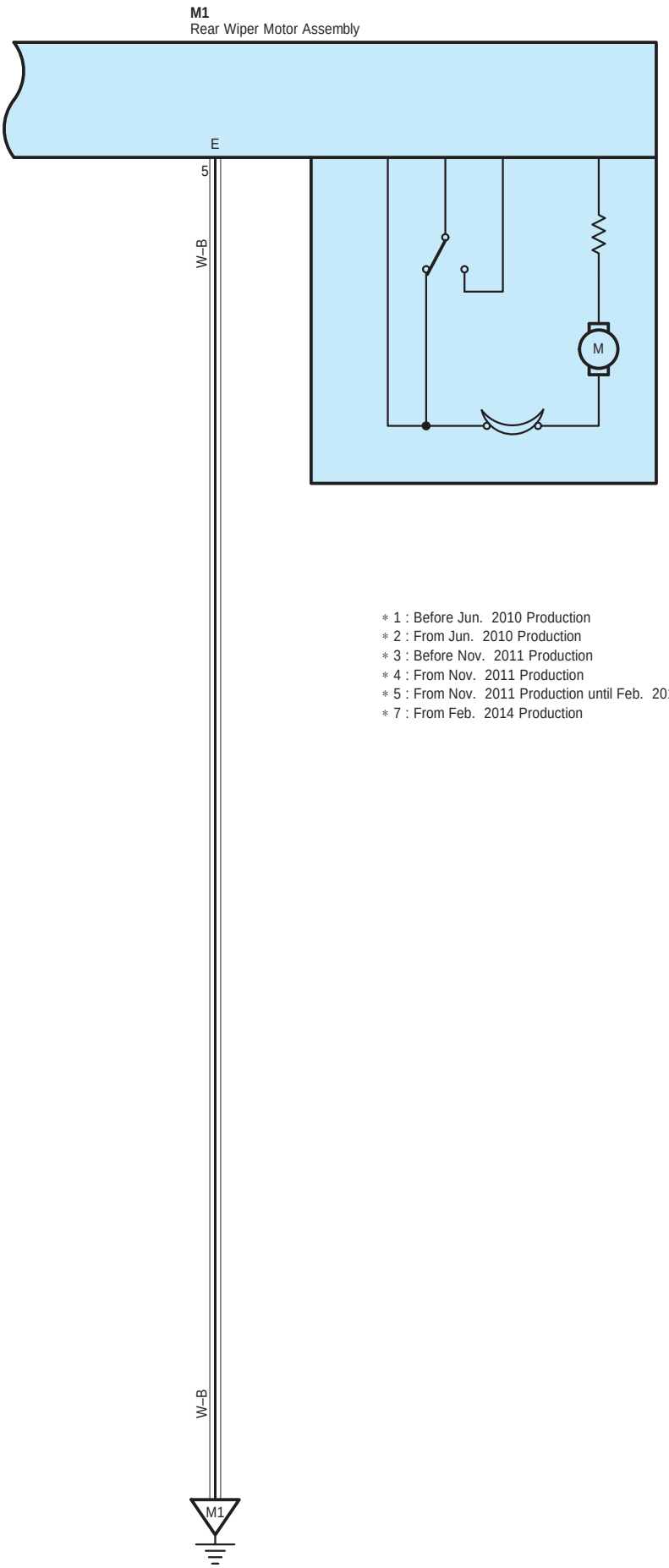

∗ 1 : Before Jun. 2010 Production
∗ 2 : From Jun. 2010 Production
∗ 3 : Before Nov. 2011 Production
∗ 4 : From Nov. 2011 Production
∗ 5 : From Nov. 2011 Production until Feb. 2014 Production
∗ 7 : From Feb. 2014 Production

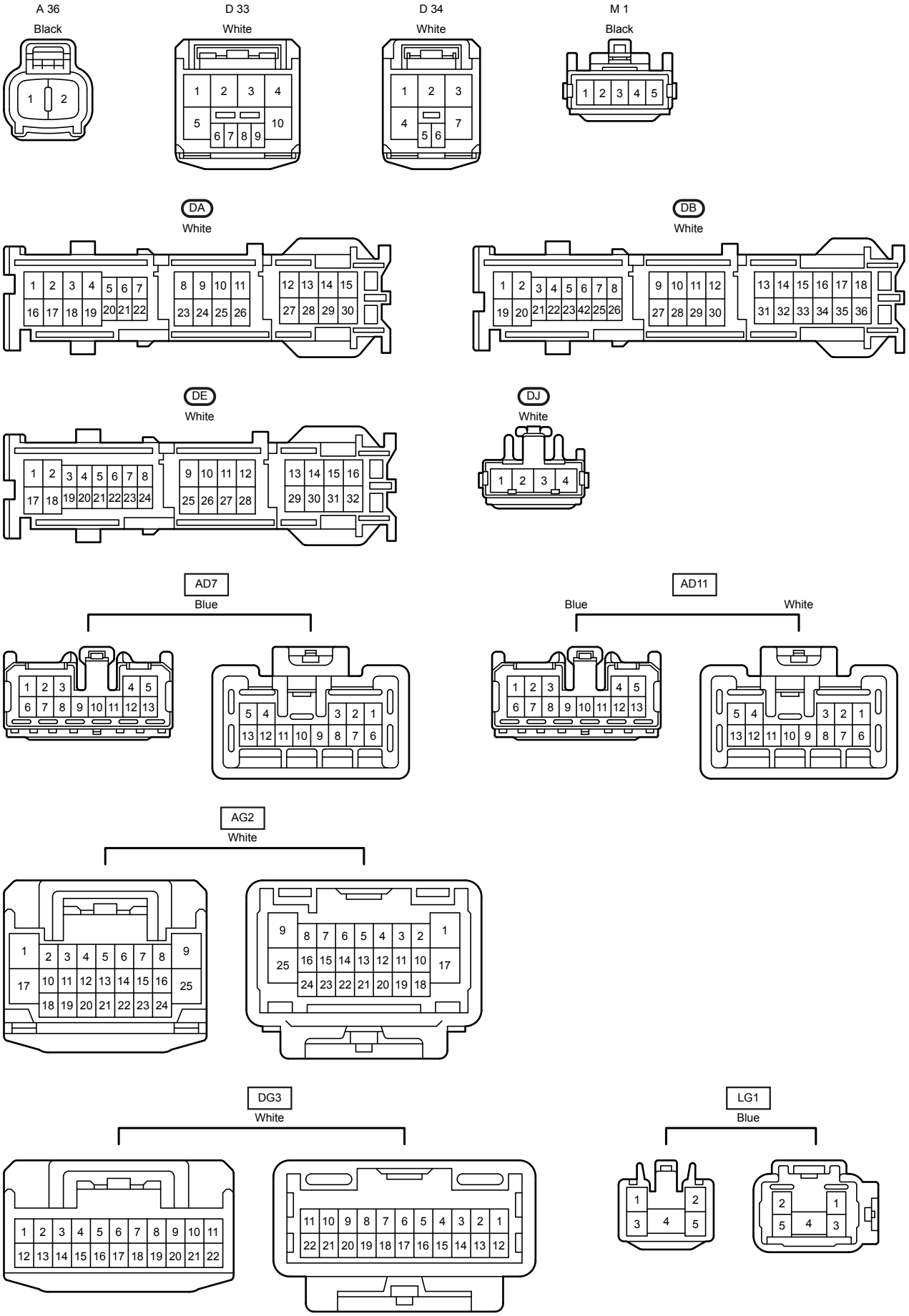
A 36
Black
D 33
White
D 34
White
M 1
Black
DA
White
DB
White
DE
White
DJ
White
AD7
Blue
AD11
Blue
White
AG2
White
DG3
White
LG1
Blue

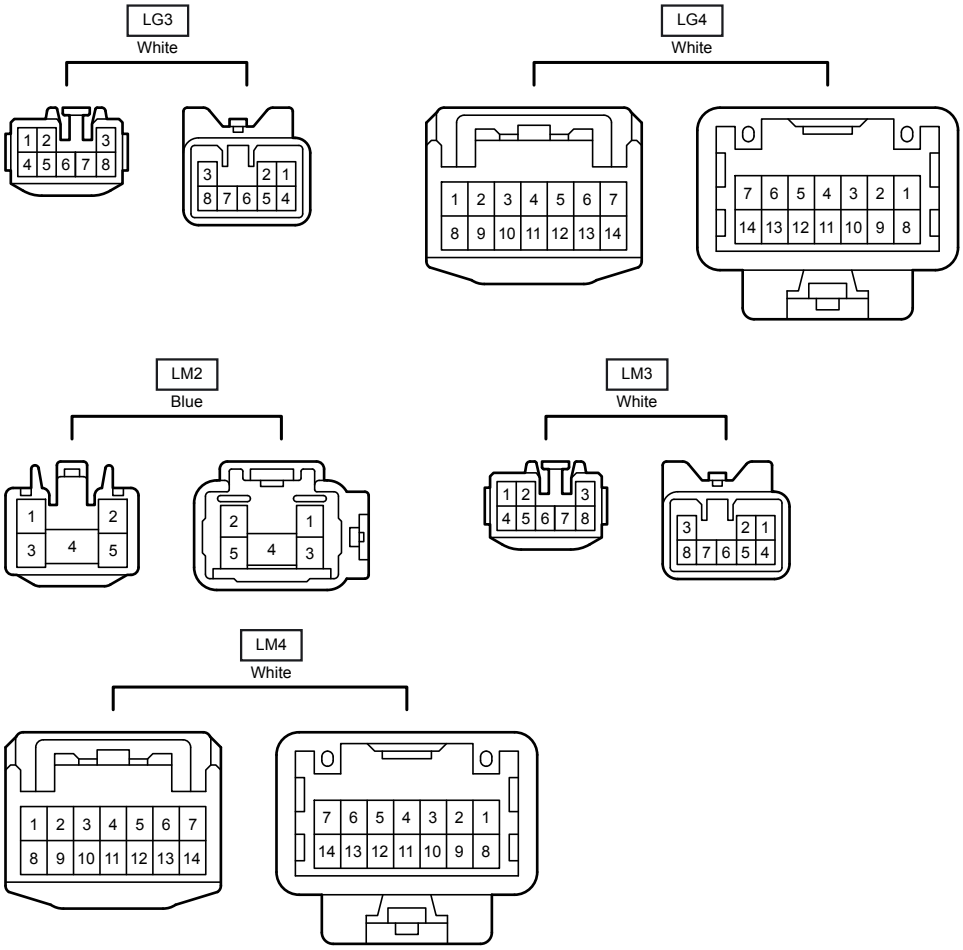
LG3
White
1 2 3
4 5 6 7 8
3 2 1
8 7 6 5 4
LG4
White
1 2 3 4 5 6 7
8 9 10 11 12 13 14
7 6 5 4 3 2 1
14 13 12 11 10 9 8
LM2
Blue
1 2
3 4 5
2 1
5 4 3
LM3
White
1 2 3
4 5 6 7 8
3 2 1
8 7 6 5 4
LM4
White
1 2 3 4 5 6 7
8 9 10 11 12 13 14
7 6 5 4 3 2 1
14 13 12 11 10 9 8