(Cont. next page)

Power Source (w/o Entry & Start System)

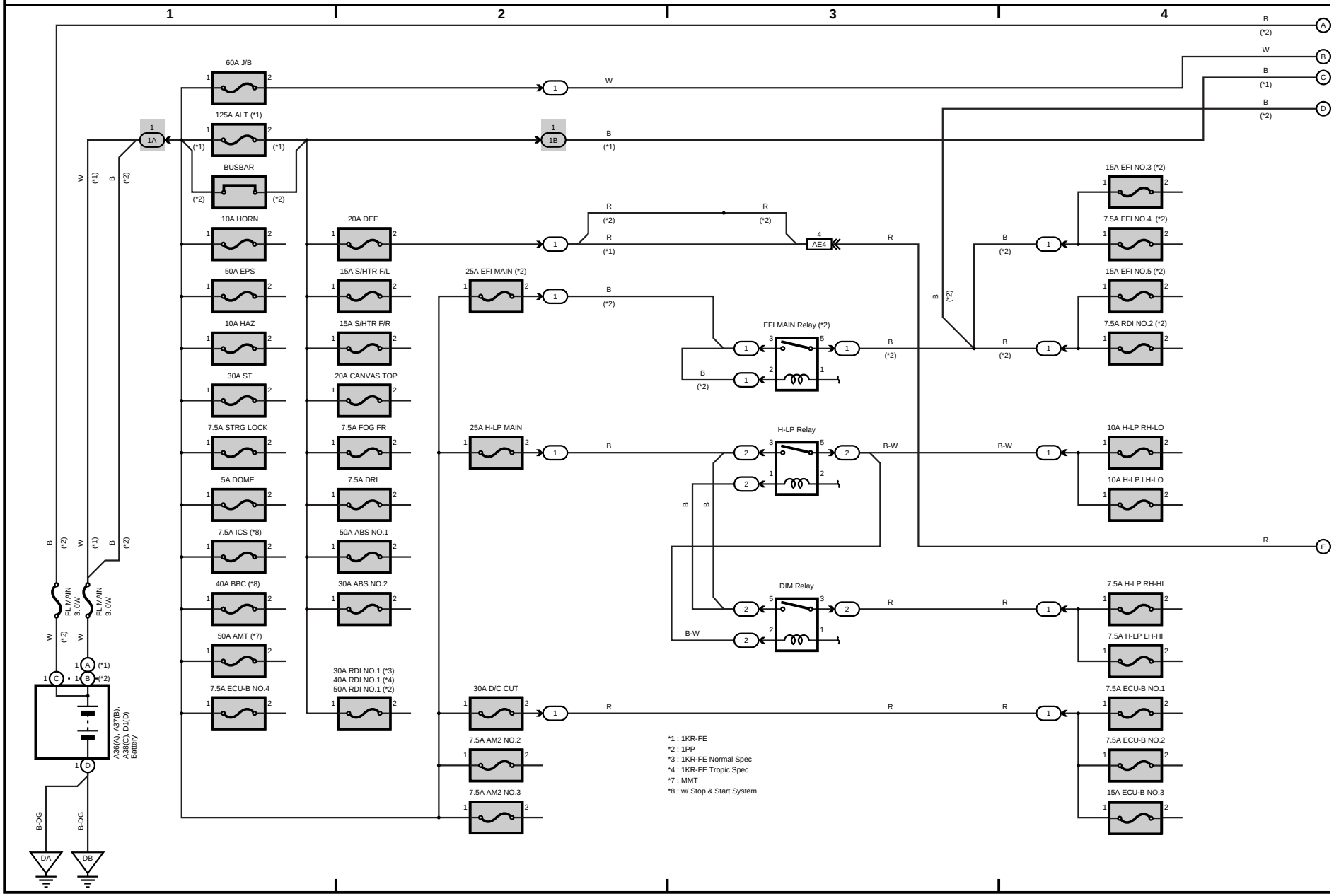

(Cont. next page)

Power Source (w/o Entry & Start System)

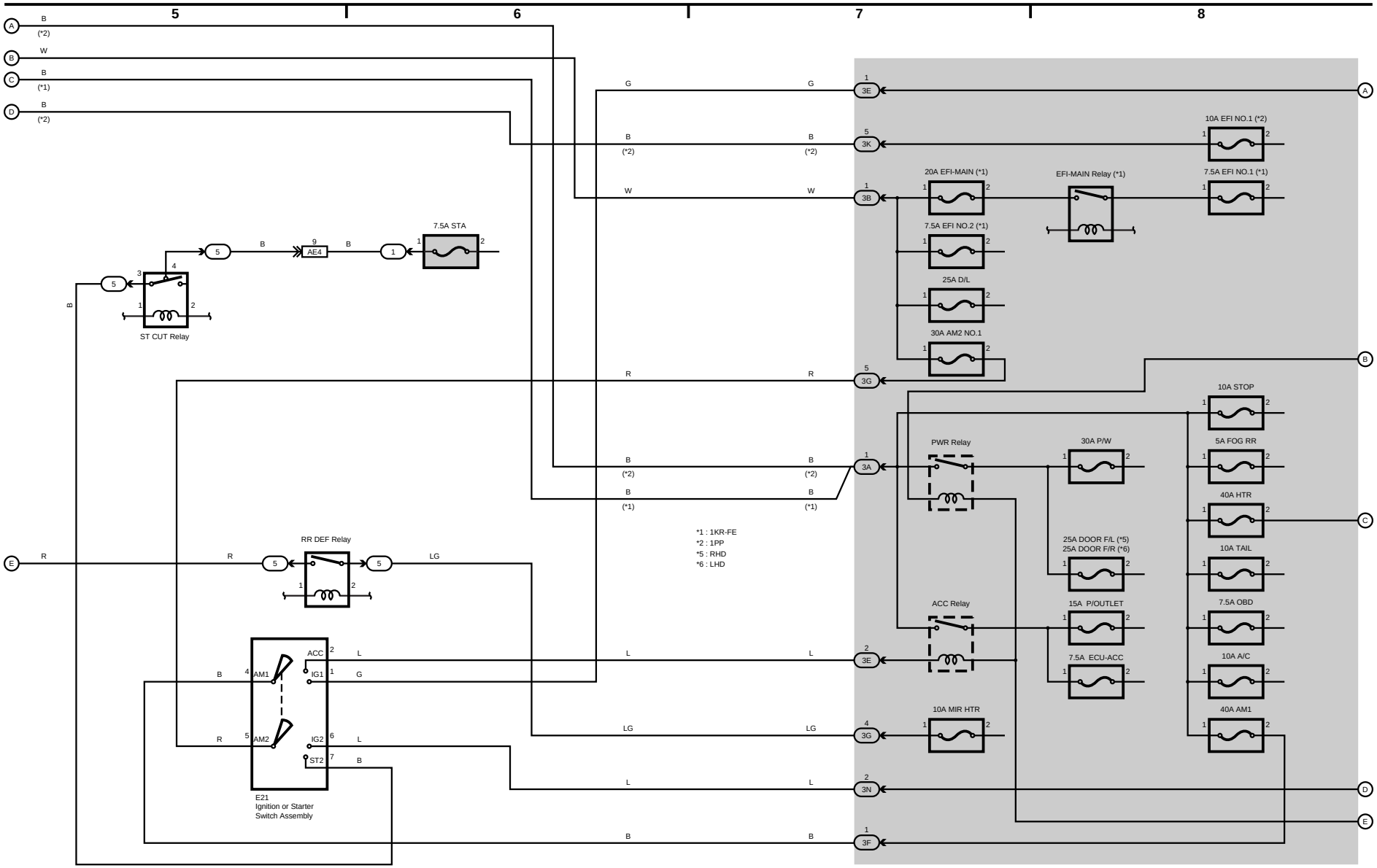
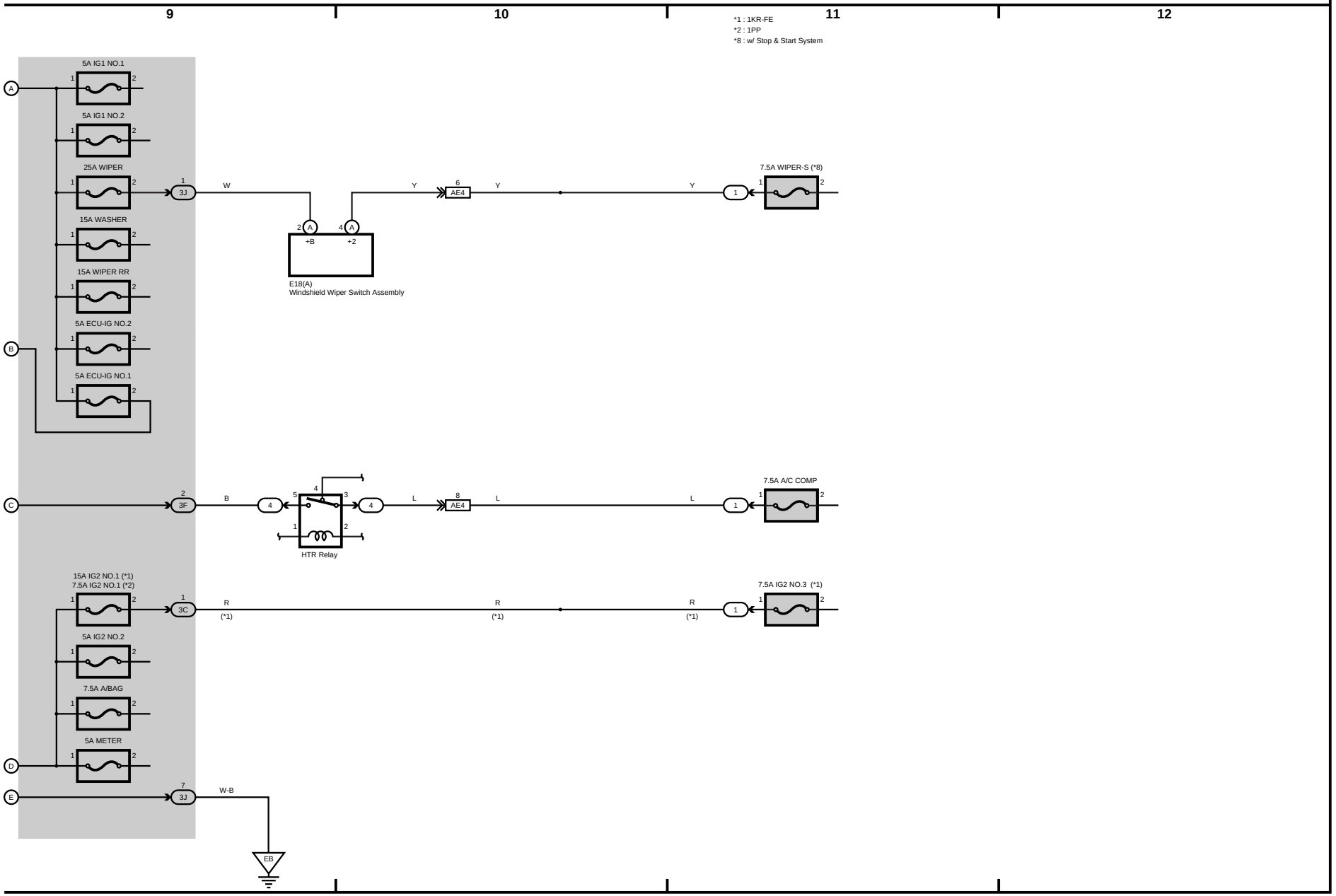
Power Source (w/o Entry & Start System)