(Cont. next page)

SRS

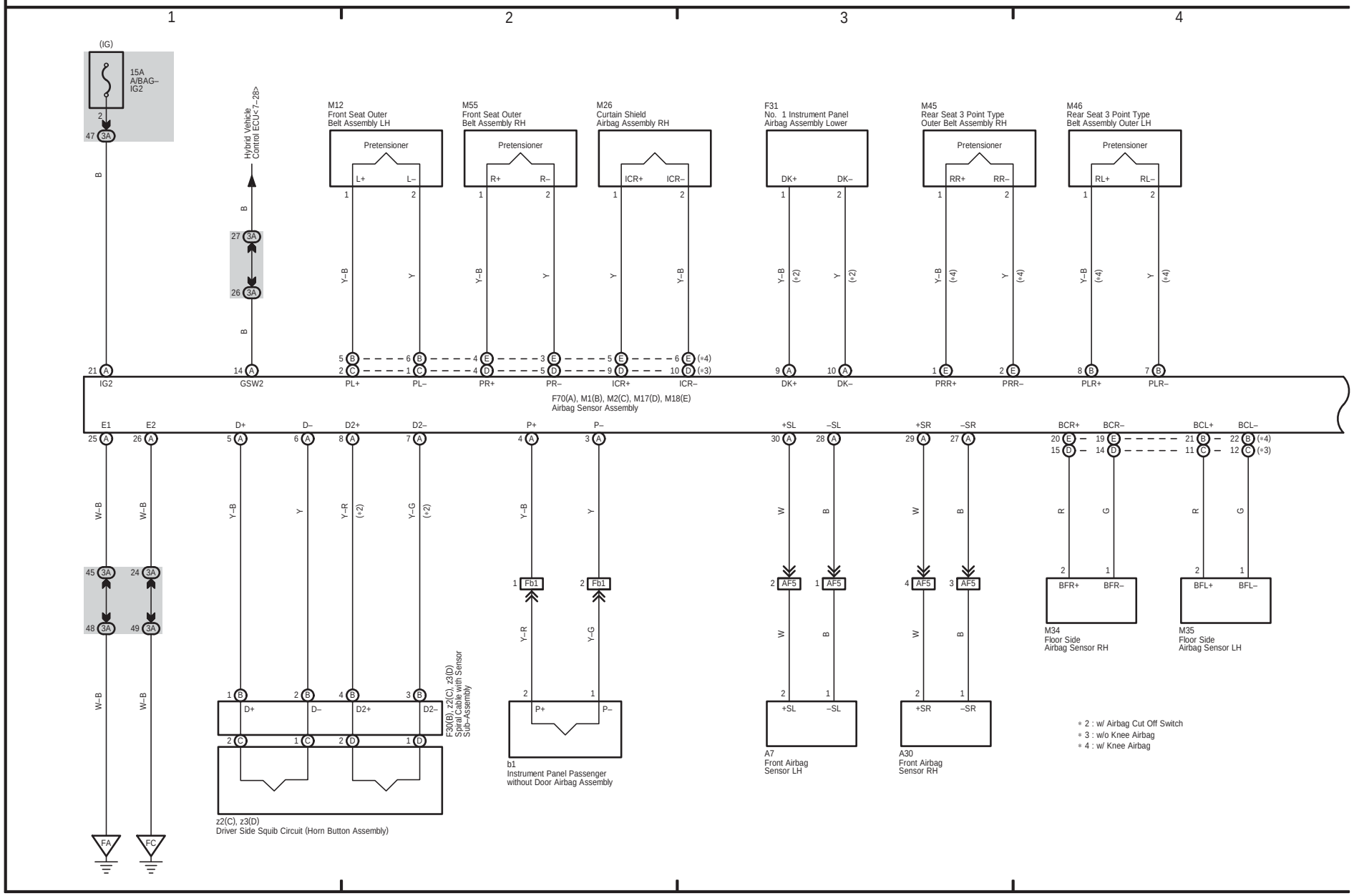

(Cont. next page)

SRS

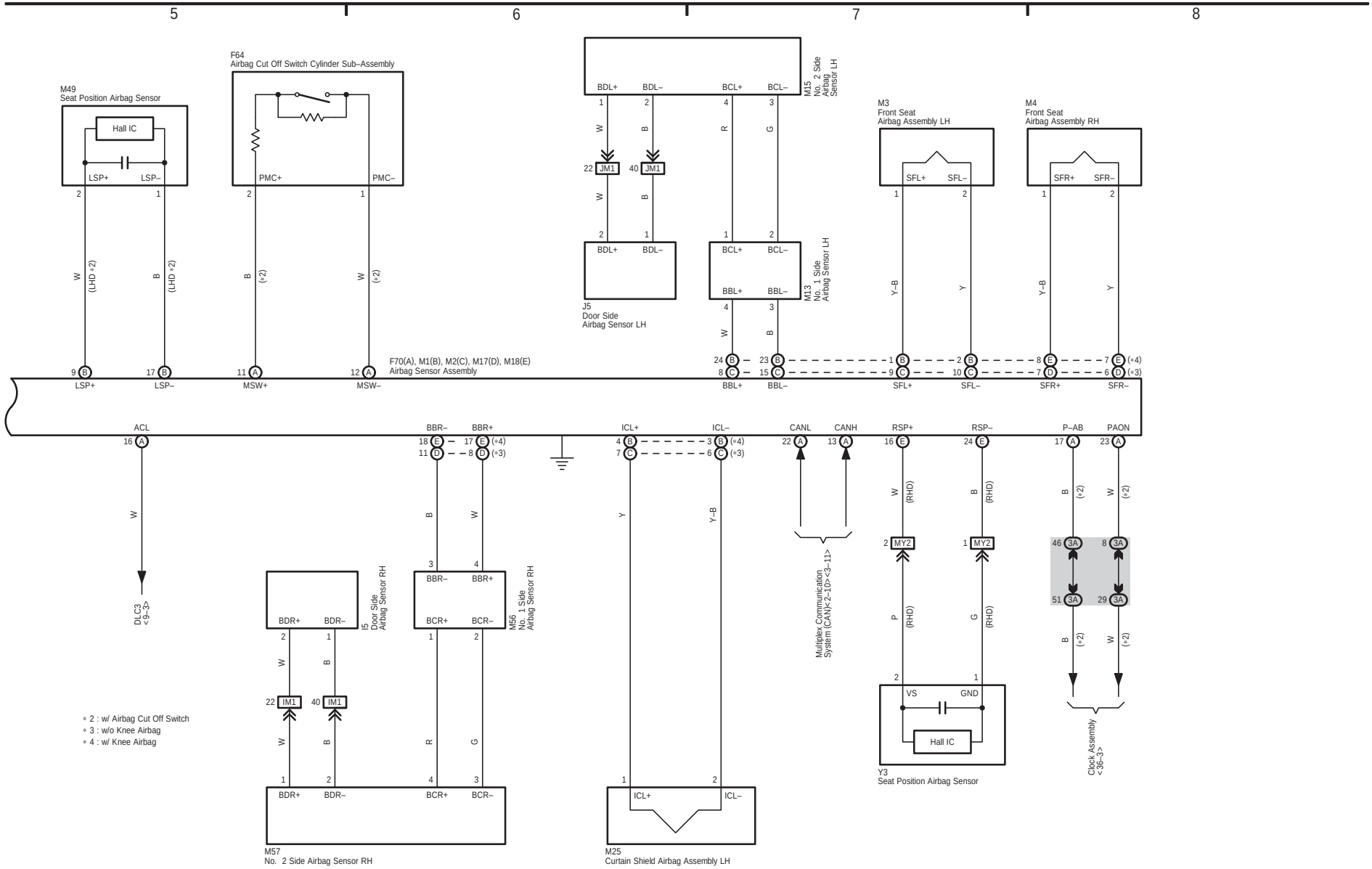

SRS

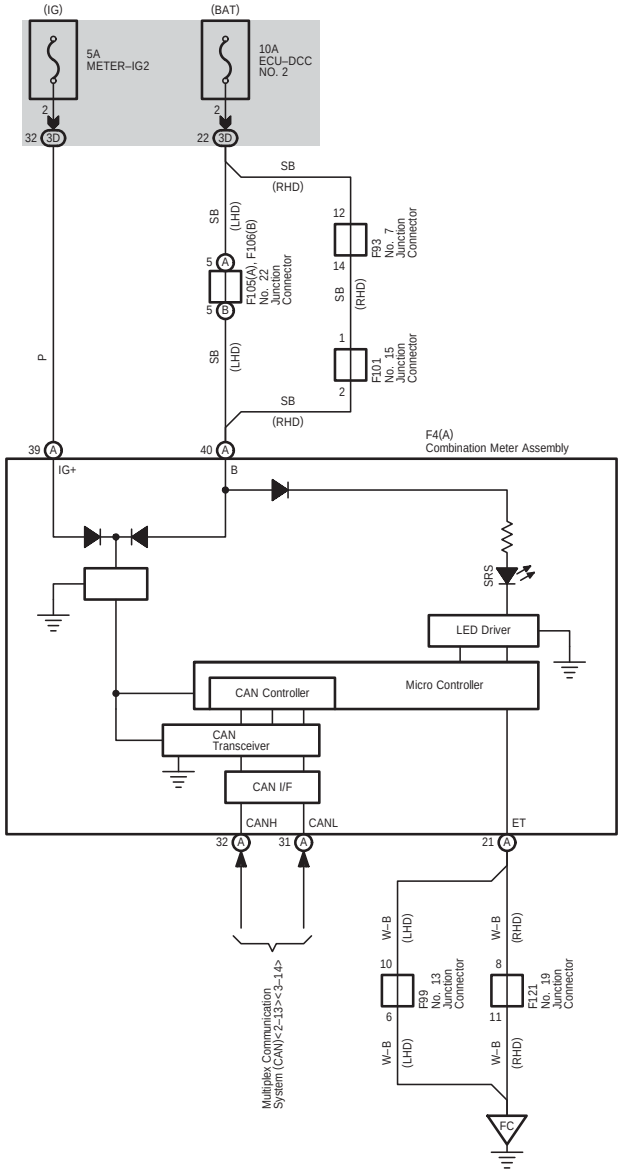
9
10
11
12
(IG)
(BAT)
5A
METER–IG2
10A
ECU–DCC
NO. 2
2
32 3D
22 3D
SB
(RHD)
SB
(LHD)
F105(A), F106(B)
No. 22
Junction
Connector
5 A
5 B
12
14
F93
No. 7
Junction
Connector
SB
(RHD)
1
2
F101
No. 15
Junction
Connector
P
SB
(LHD)
SB
(RHD)
F4(A)
Combination Meter Assembly
39 A
40 A
IG+
B
SRS
LED Driver
Micro Controller
CAN Controller
CAN
Transceiver
CAN I/F
CANH
CANL
ET
32 A
31 A
21 A
W–B
(LHD)
W–B
(RHD)
10
6
8
11
F99
No. 13
Junction
Connector
F121
No. 19
Junction
Connector
W–B
(LHD)
W–B
(RHD)
Multiplex Communication
System (CAN)<2–13><3–14>
FC