(Cont. next page)

Power Window (LHD)

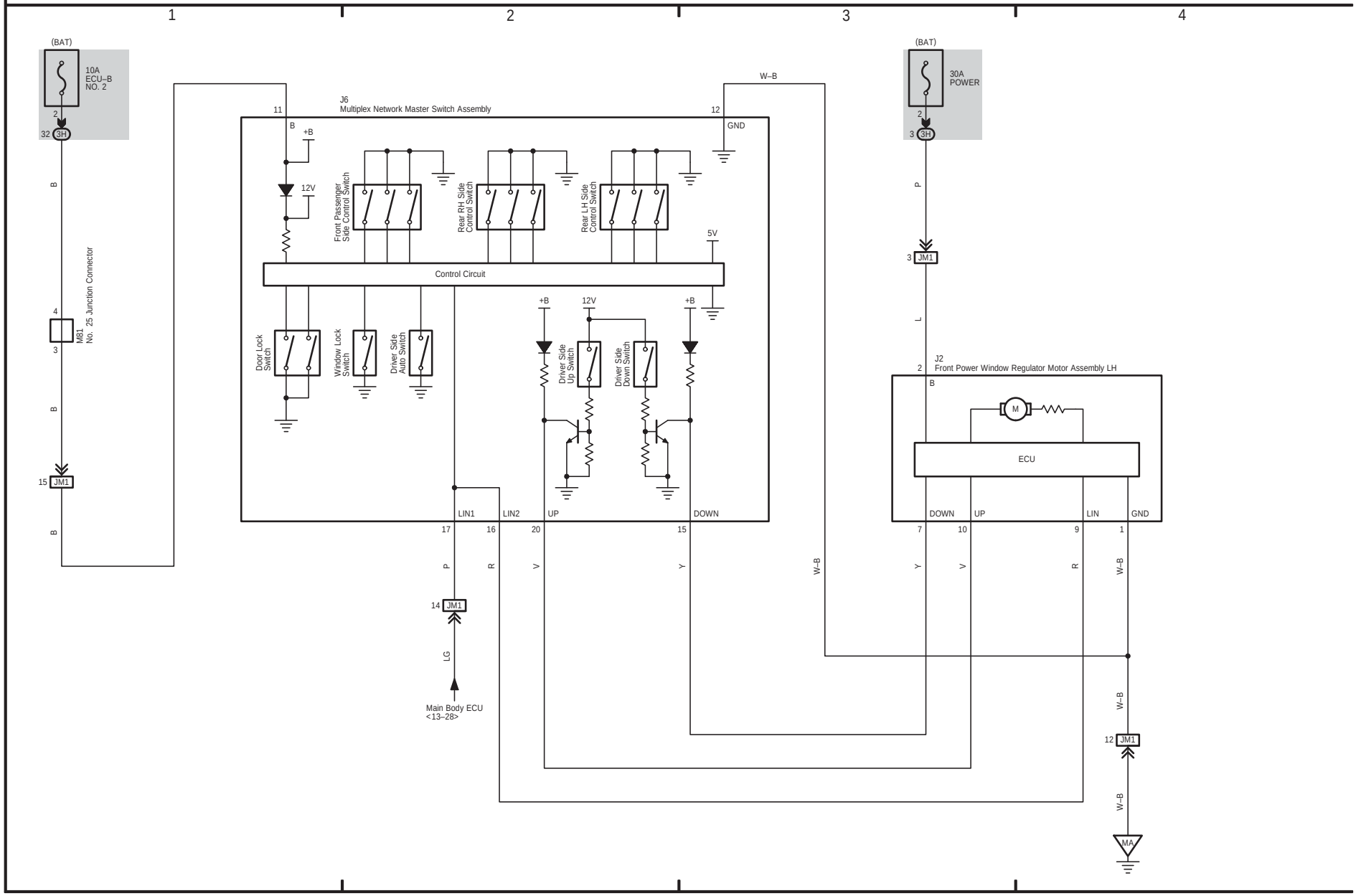

(Cont. next page)

Power Window (LHD)

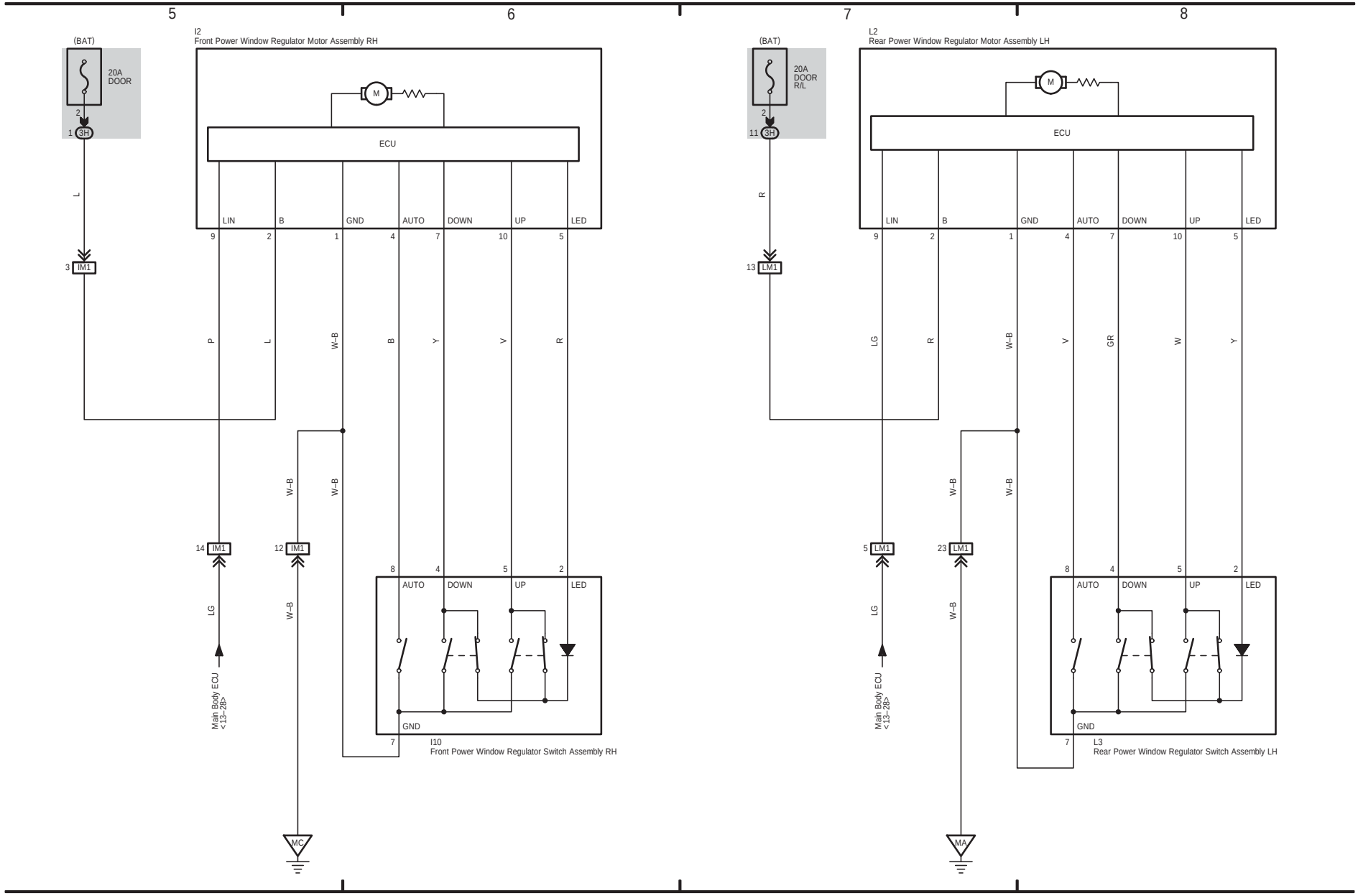
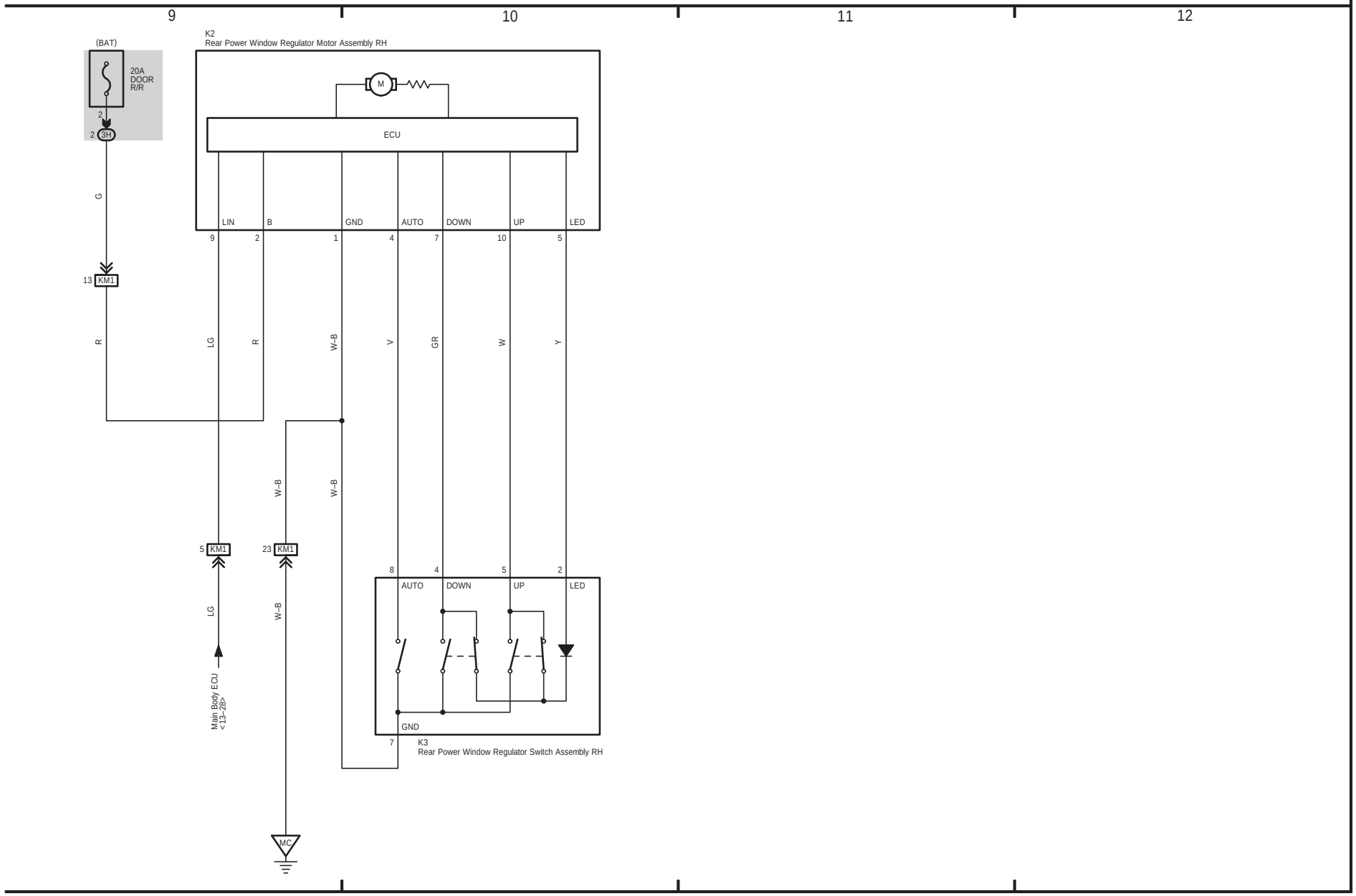
Power Window (LHD)