(Cont. next page)

Remote Control Mirror (LHD)

* 1 : w/ Retractor Mirror
* 2 : Before May 2018 Production
* 3 : From May 2018 Production

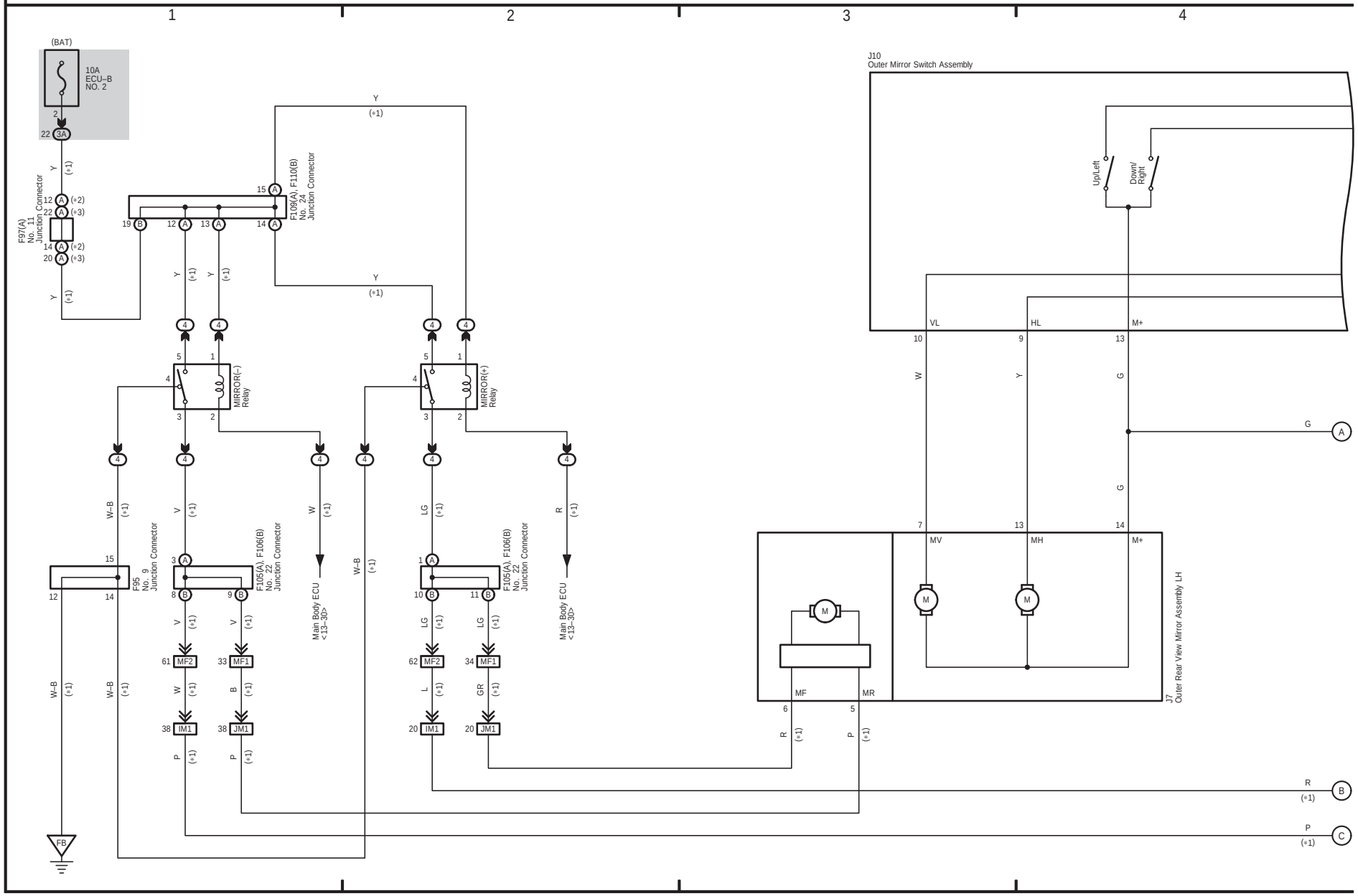

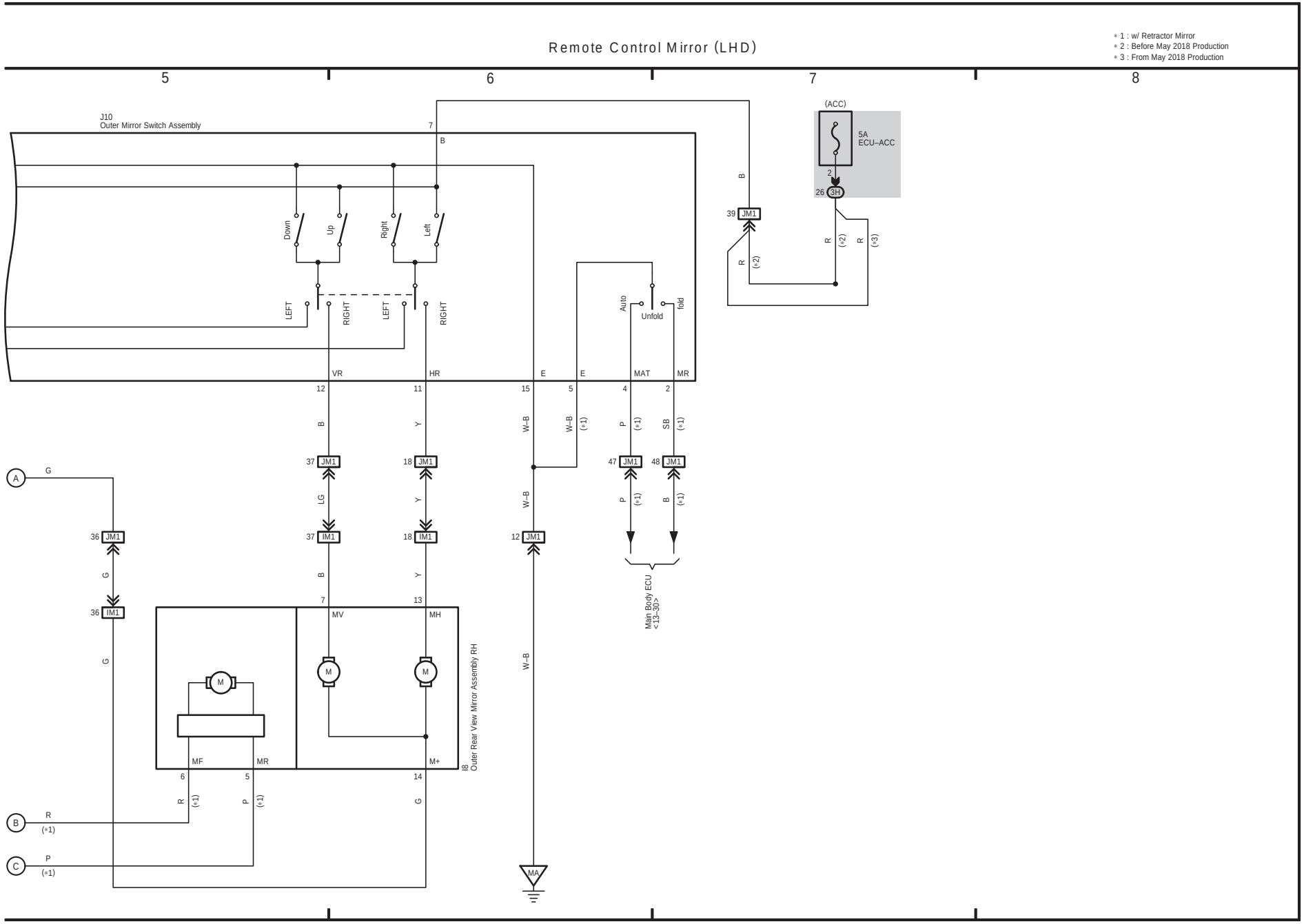
Remote Control Mirror (LHD)
∗1 : w/ Retractor Mirror
∗2 : Before May 2018 Production
∗3 : From May 2018 Production
5
6
7
8
J10
Outer Mirror Switch Assembly
Down
Up
Right
Left
LEFT
RIGHT
LEFT
RIGHT
Auto
Unfold
fold
VR
HR
E
E
MAT
MR
(ACC)
5A
ECU–ACC
3H
JM1
IM1
Main Body ECU
<13–30>
MV
MH
MF
MR
M+
Outer Rear View Mirror Assembly RH
MA