63 CAMRY (TMMK Made)

(Cont. next page)

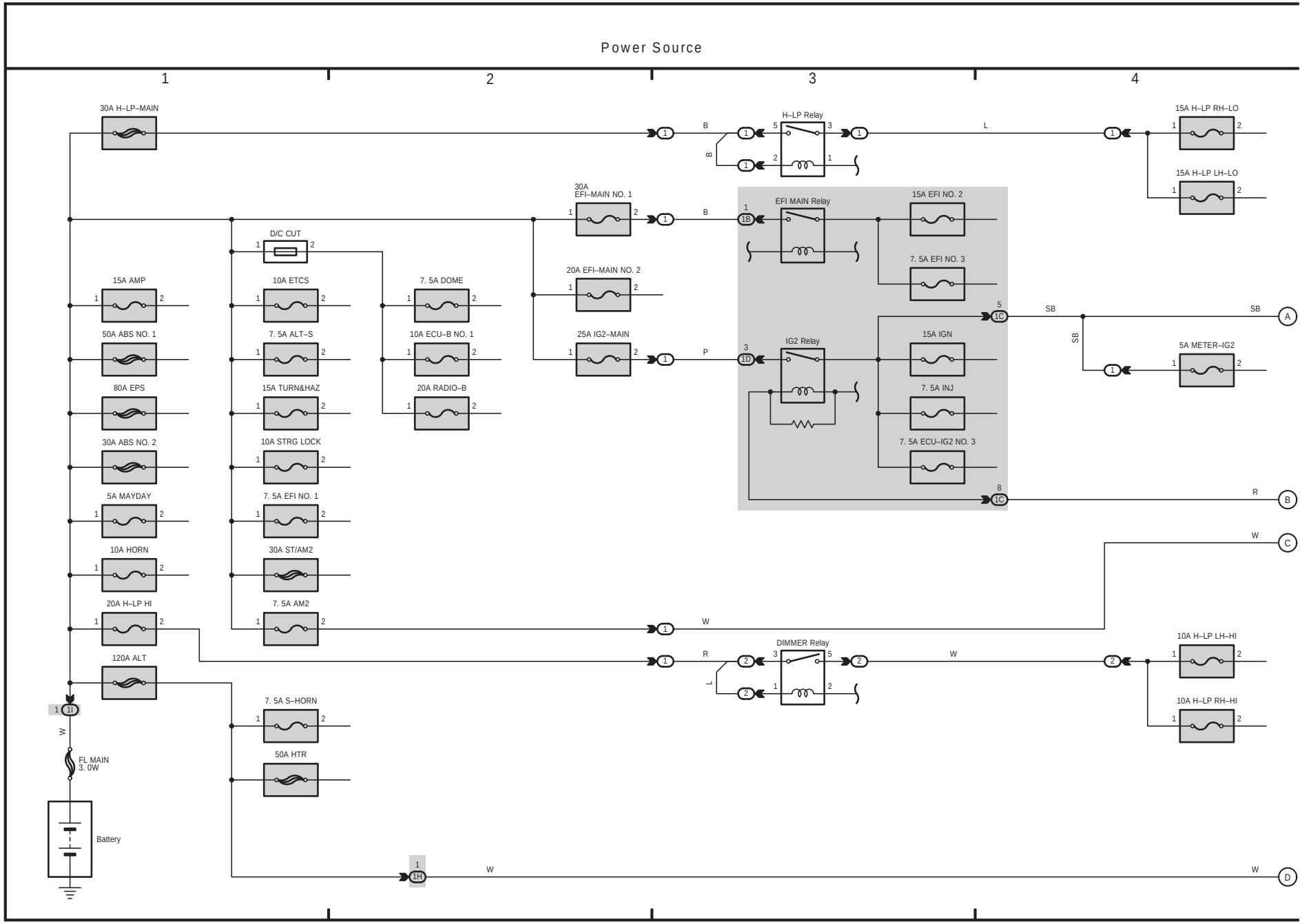

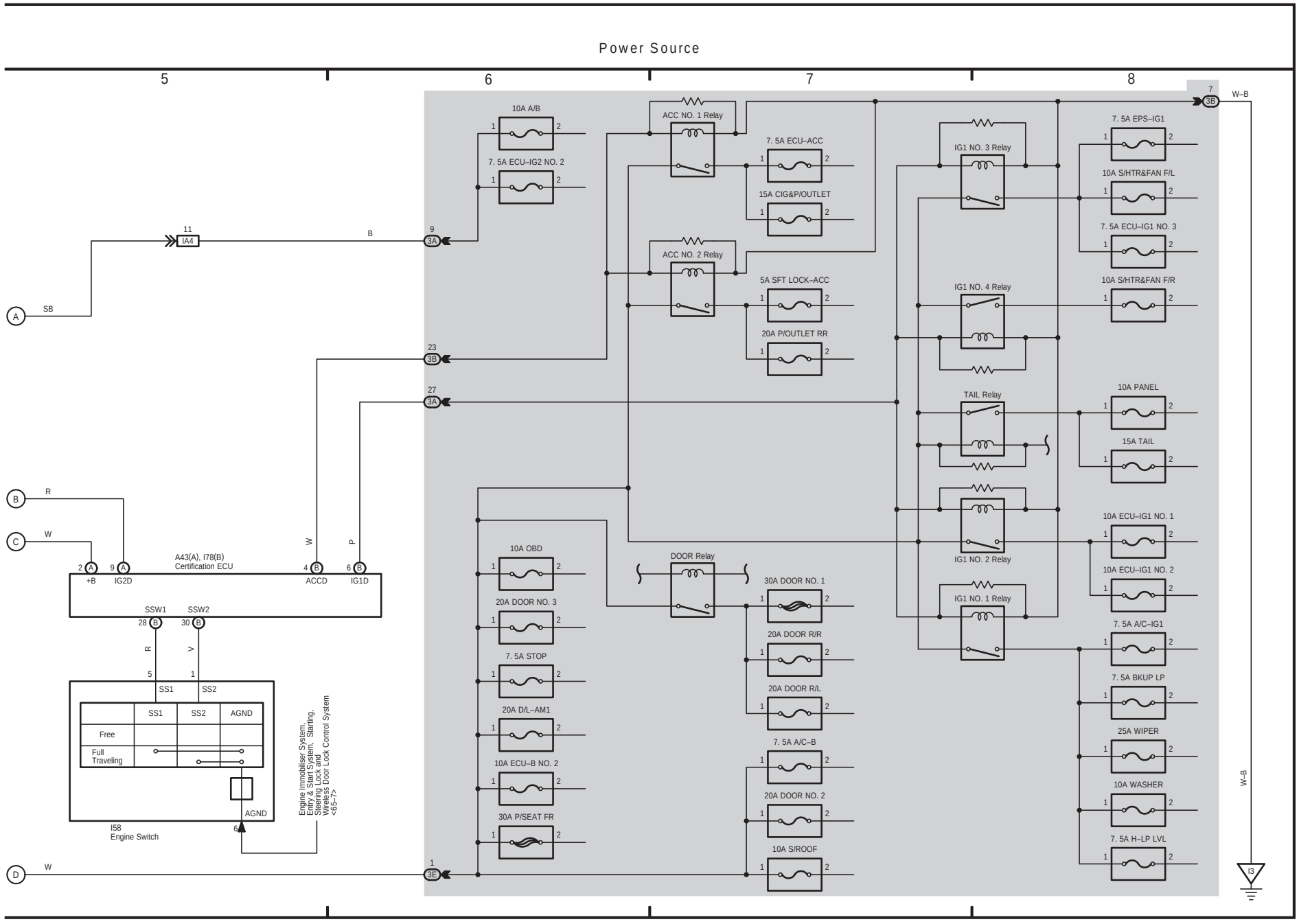

CAMRY (EM27W4E)

M