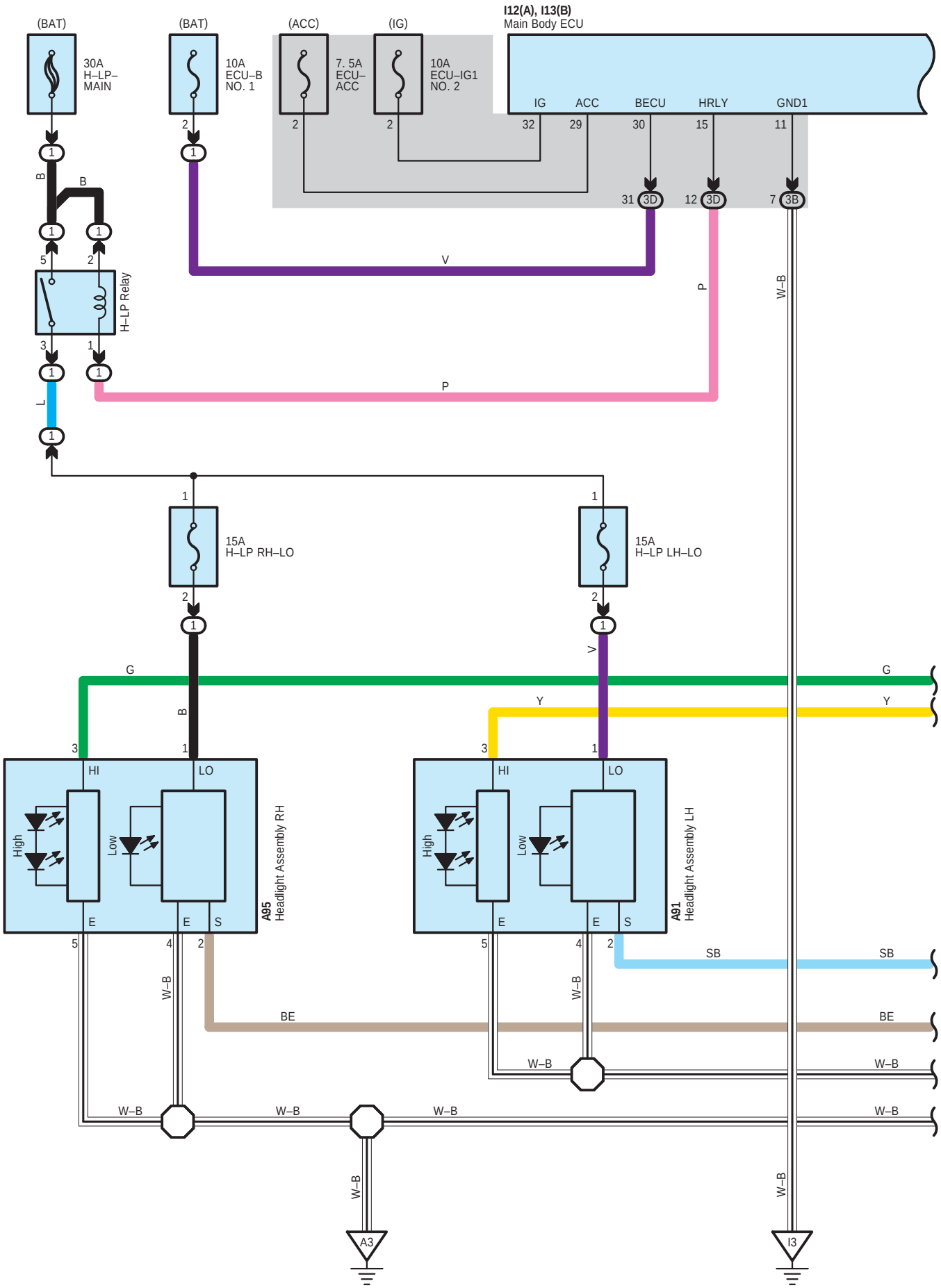
(BAT)
30A
H–LP–
MAIN
(BAT)
10A
ECU–B
NO. 1
(ACC)
7. 5A
ECU–
ACC
(IG)
10A
ECU–IG1
NO. 2
I12(A), I13(B)
Main Body ECU
IG
ACC
BECU
HRLY
GND1
32
29
30
15
11
31
12
7
3D
3D
3B
H–LP Relay
15A
H–LP RH–LO
15A
H–LP LH–LO
HI
LO
High
Low
E
S
A95
Headlight Assembly RH
A91
Headlight Assembly LH
B
V
P
L
G
Y
SB
BE
W–B
A3
I3

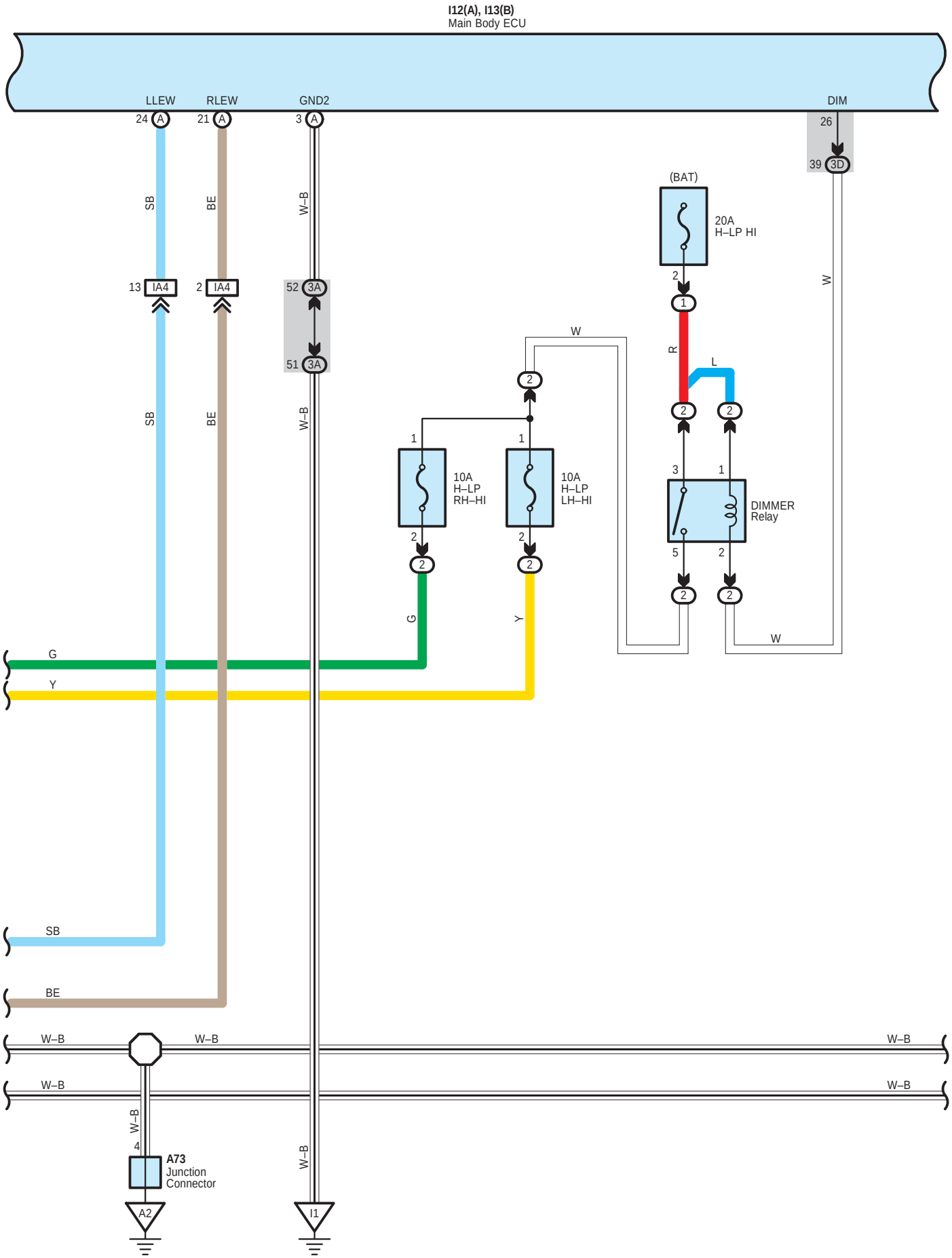
I12(A), I13(B)
Main Body ECU
LLEW
RLEW
GND2
DIM
24 A
21 A
3 A
26
39 3D
(BAT)
20A
H–LP HI
SB
BE
W–B
13 IA4
2 IA4
52 3A
51 3A
W
R
L
10A
H–LP
RH–HI
10A
H–LP
LH–HI
DIMMER
Relay
G
Y
SB
BE
W–B
A73
Junction
Connector
A2
I1

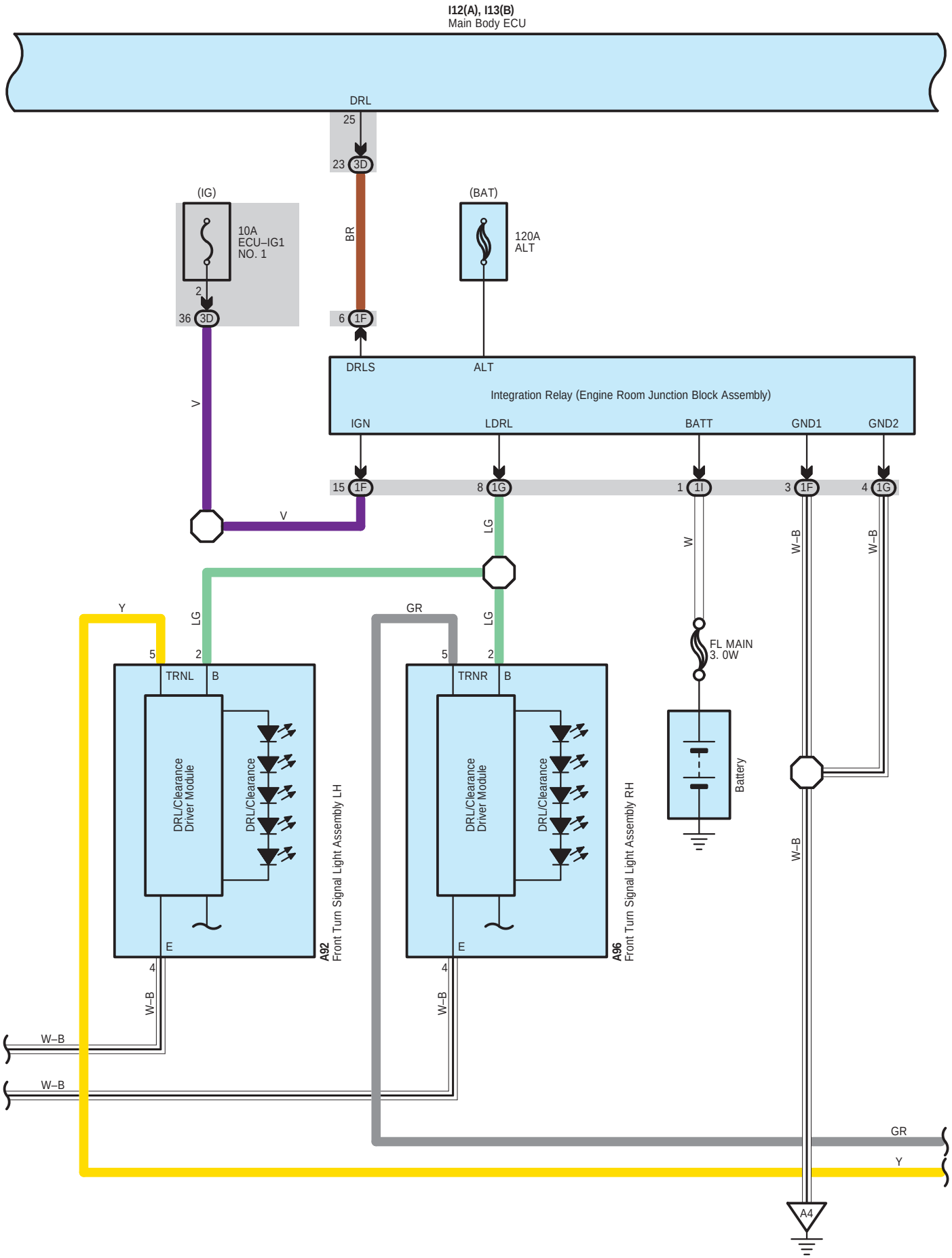
I12(A), I13(B)
Main Body ECU
DRL
25
23 3D
BR
6 1F
(IG)
10A
ECU–IG1
NO. 1
2
36 3D
V
(BAT)
120A
ALT
DRLS
ALT
Integration Relay (Engine Room Junction Block Assembly)
IGN
LDRL
BATT
GND1
GND2
15 1F
8 1G
1 1I
3 1F
4 1G
V
LG
W
W–B
W–B
Y
LG
GR
LG
5
2
TRNL
B
5
2
TRNR
B
FL MAIN
3. 0W
Battery
DRL/Clearance
Driver Module
DRL/Clearance
A92
Front Turn Signal Light Assembly LH
DRL/Clearance
Driver Module
DRL/Clearance
A96
Front Turn Signal Light Assembly RH
E
4
W–B
E
4
W–B
W–B
W–B
W–B
GR
Y
A4

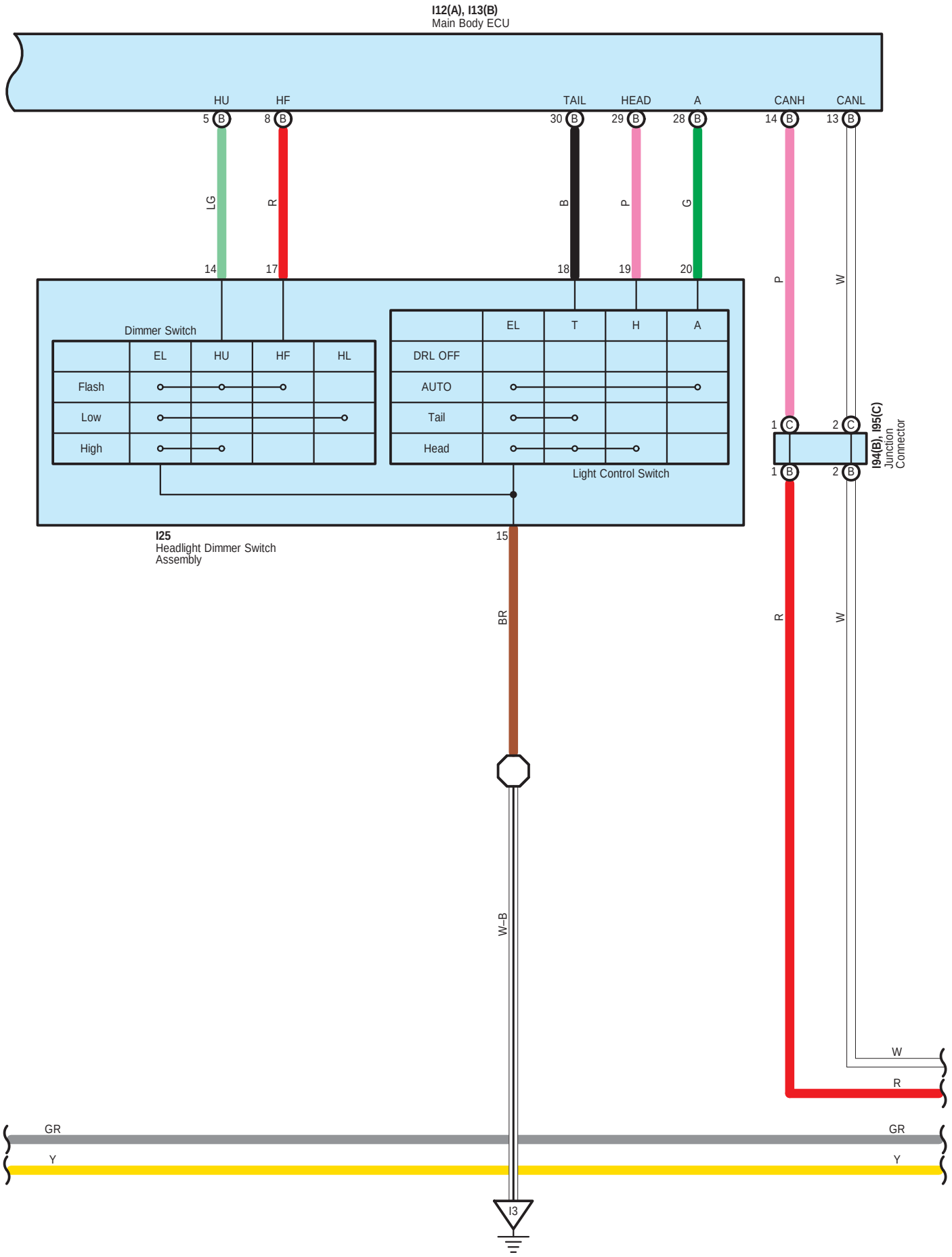
I12(A), I13(B)
Main Body ECU
HU
HF
TAIL
HEAD
A
CANH
CANL
5 B
8 B
30 B
29 B
28 B
14 B
13 B
LG
R
B
P
G
P
W
14
17
18
19
20
Dimmer Switch
EL
HU
HF
HL
Flash
Low
High
EL
T
H
A
DRL OFF
AUTO
Tail
Head
Light Control Switch
1 C
2 C
1 B
2 B
I94(B), I95(C)
Junction
Connector
I25
Headlight Dimmer Switch
Assembly
15
BR
R
W
W–B
W
R
GR
GR
Y
Y
I3

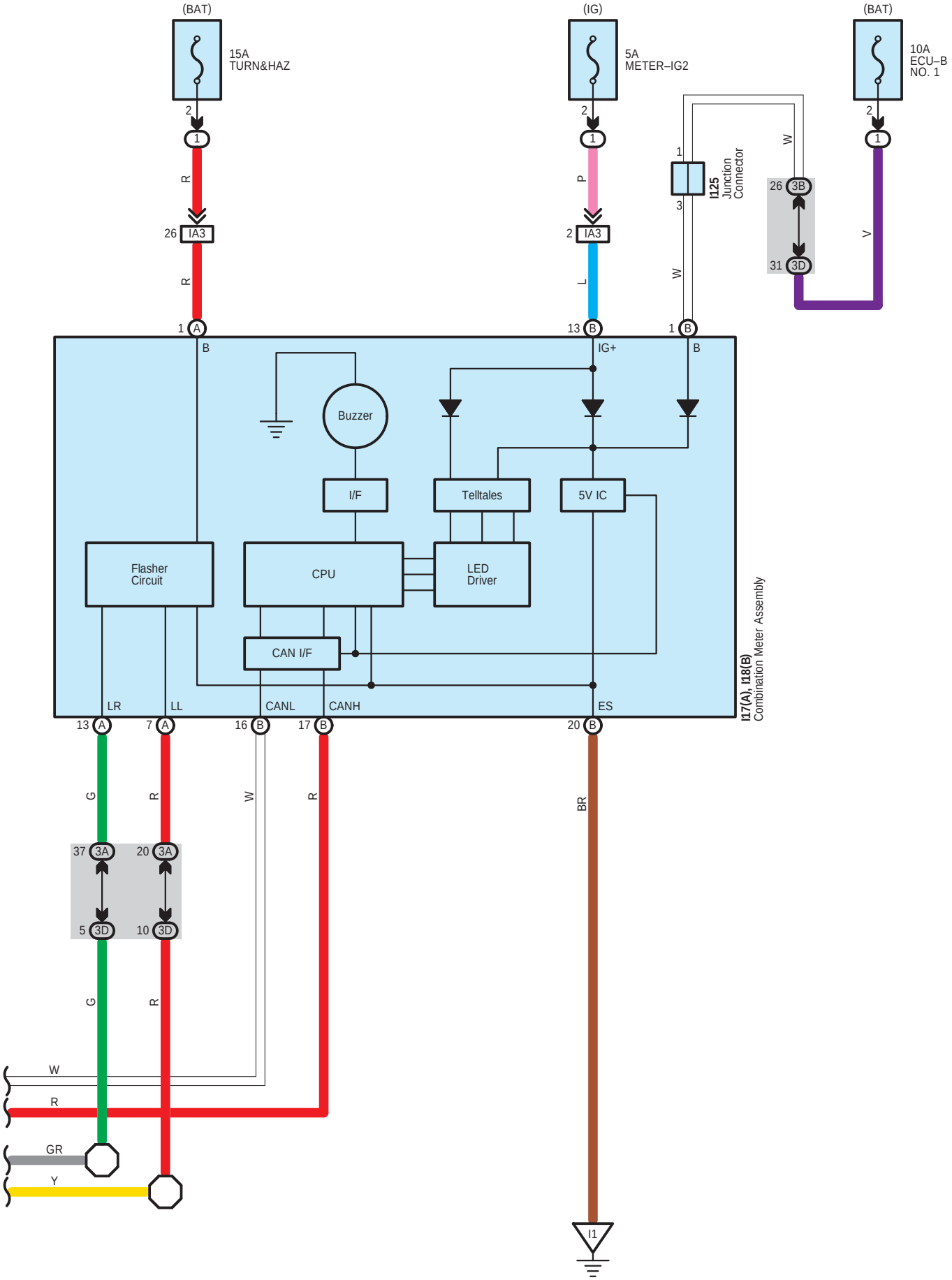
(BAT)
15A
TURN&HAZ
(IG)
5A
METER–IG2
(BAT)
10A
ECU–B
NO. 1
I125
Junction
Connector
I17(A), I18(B)
Combination Meter Assembly
Buzzer
I/F
Telltales
5V IC
Flasher
Circuit
CPU
LED
Driver
CAN I/F
IG+
LR
LL
CANL
CANH
ES
I1

A 73
Gray

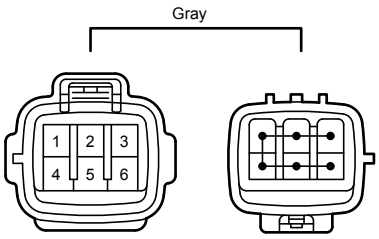

A 91
Black

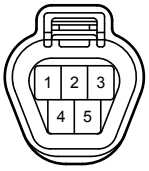

(High & Low LED Type)

A 92
Black

A 95
Black

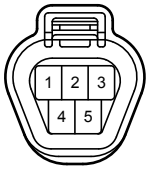

(High & Low LED Type)

A 96
Black

I 12
White

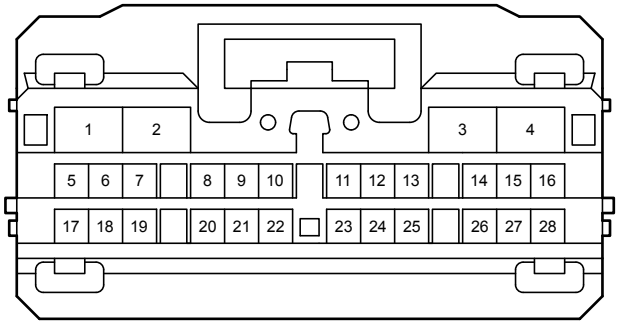

I 13
White

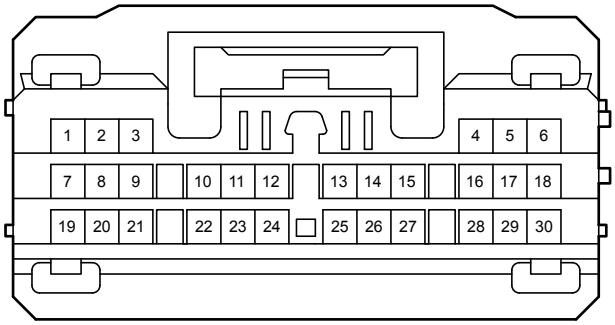

I 17
Black

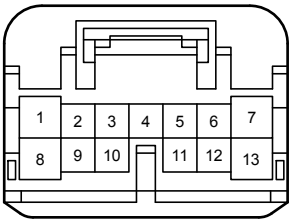

I 18
Black

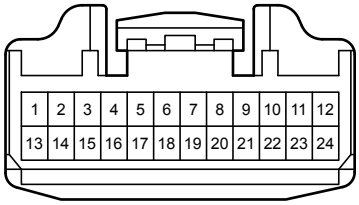

I 25
Black

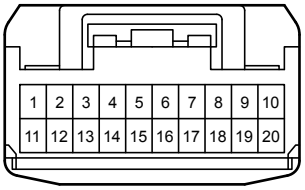

I 94
White

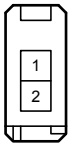

I 95
White

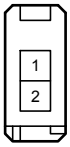

I125
Gray

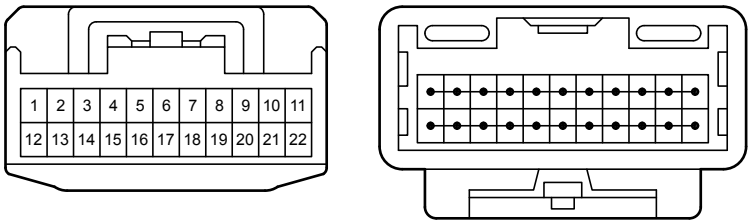

1F
White

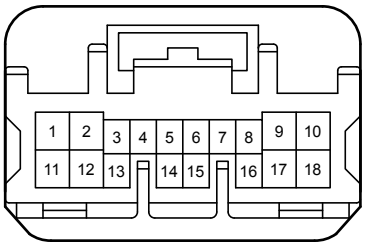

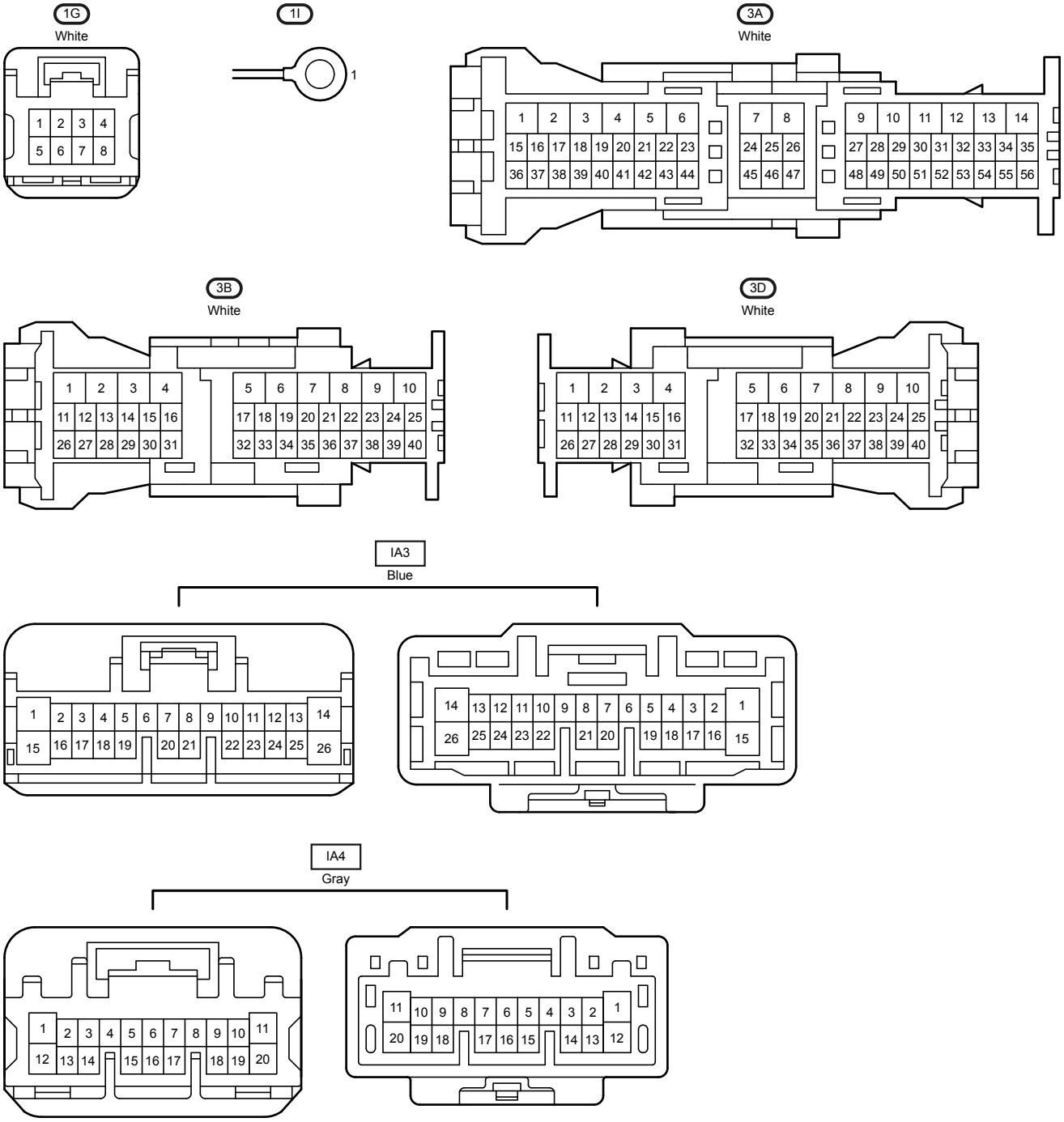
1G
White
1I
1
3A
White
3B
White
3D
White
IA3
Blue
IA4
Gray