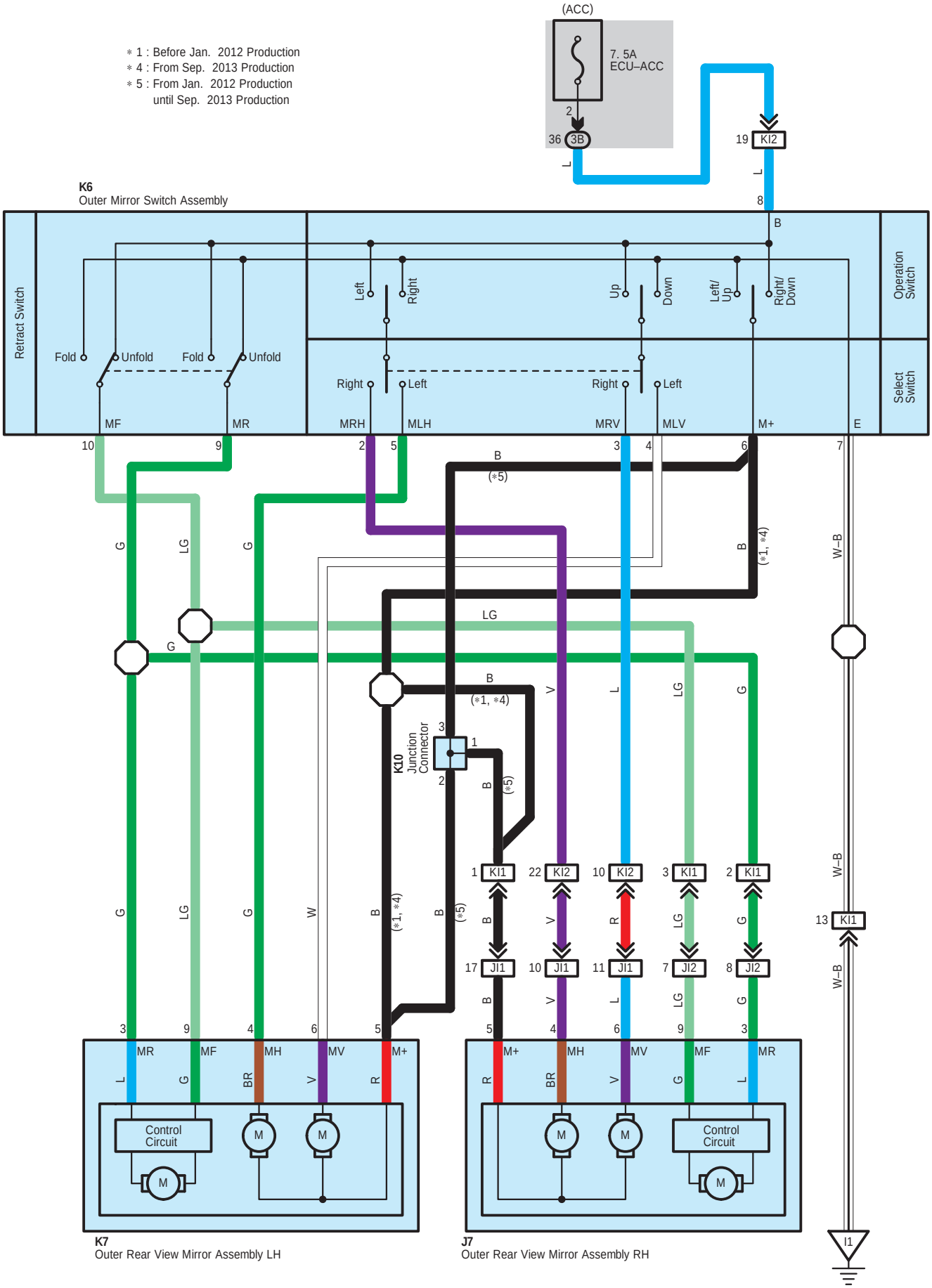
∗1 : Before Jan. 2012 Production
∗4 : From Sep. 2013 Production
∗5 : From Jan. 2012 Production until Sep. 2013 Production
(ACC)
7. 5A ECU–ACC
36 3B
19 KI2
K6
Outer Mirror Switch Assembly
Retract Switch
Operation Switch
Select Switch
Fold
Unfold
Left
Right
Up
Down
Left/ Up
Right/ Down
MF
MR
MRH
MLH
MRV
MLV
M+
E
K10
Junction Connector
KI1
KI2
JI1
JI2
Control Circuit
M
K7
Outer Rear View Mirror Assembly LH
J7
Outer Rear View Mirror Assembly RH
I1

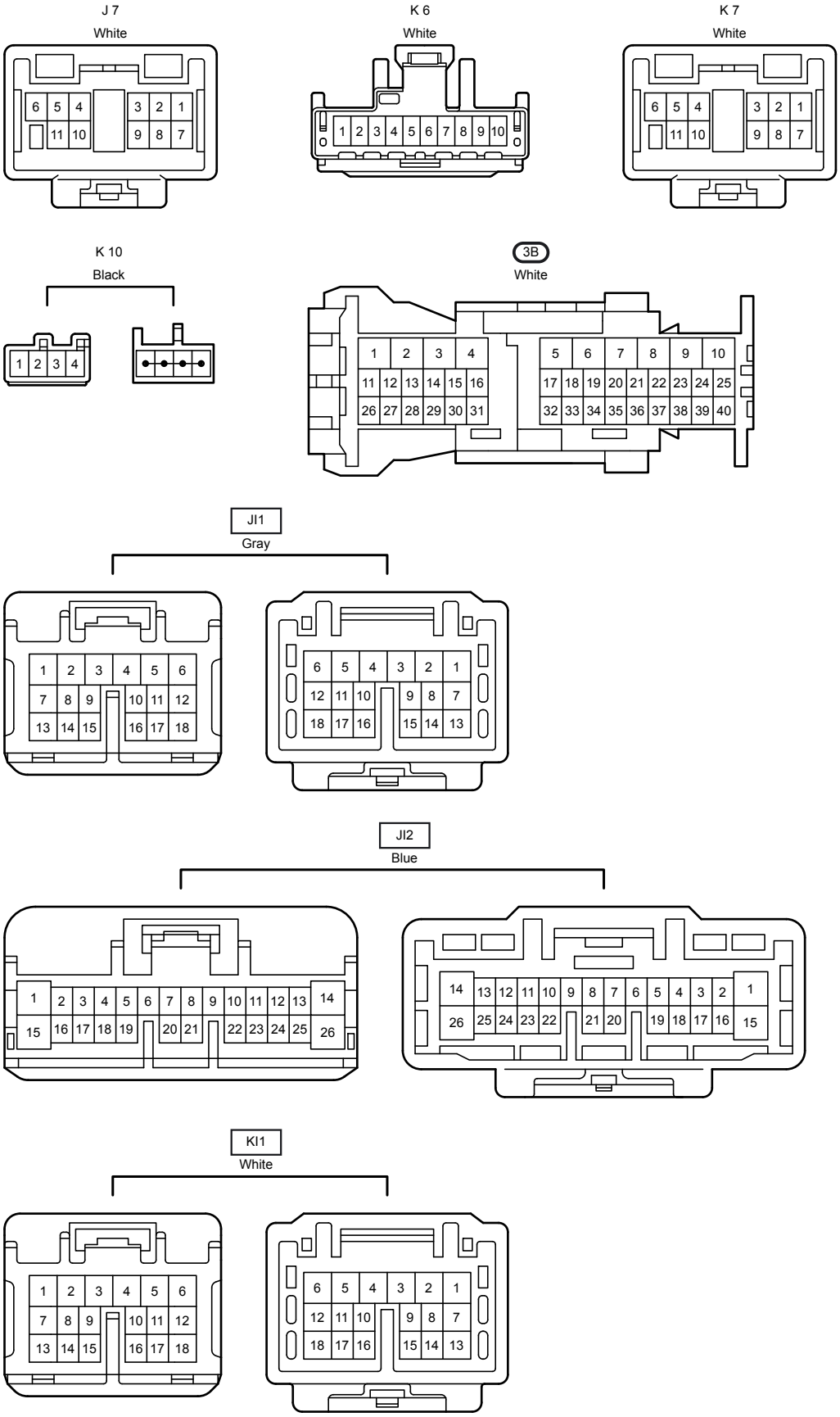
J 7
White
K 6
White
K 7
White
K 10
Black
3B
White
JI1
Gray
JI2
Blue
KI1
White

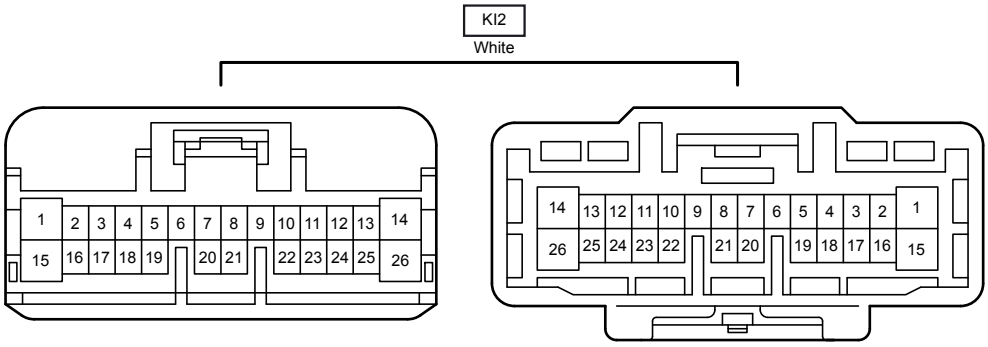
KI2
White
1 2 3 4 5 6 7 8 9 10 11 12 13 14
15 16 17 18 19 20 21 22 23 24 25 26
14 13 12 11 10 9 8 7 6 5 4 3 2 1
26 25 24 23 22 21 20 19 18 17 16 15