1 CAMRY

(Cont. next page)

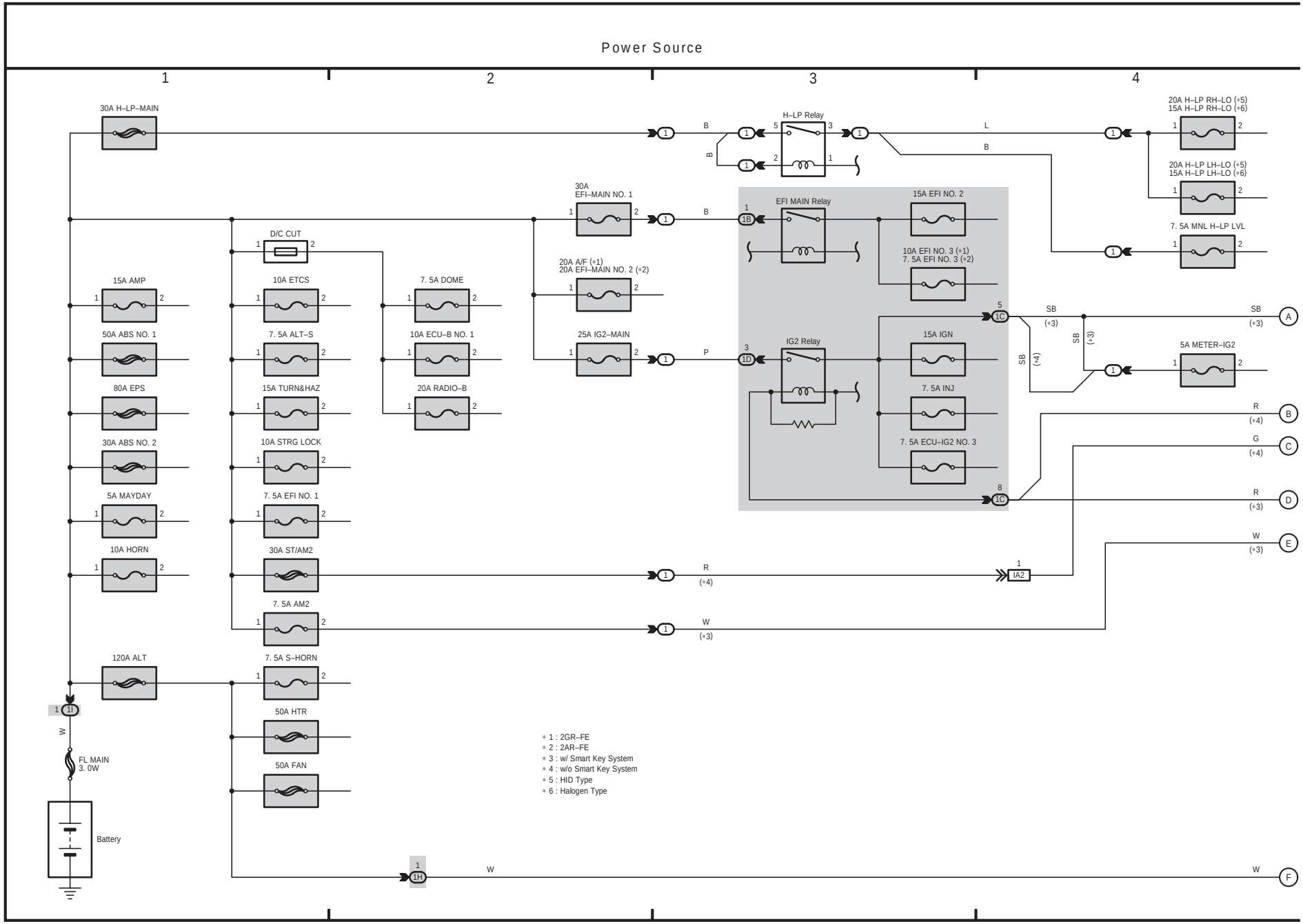

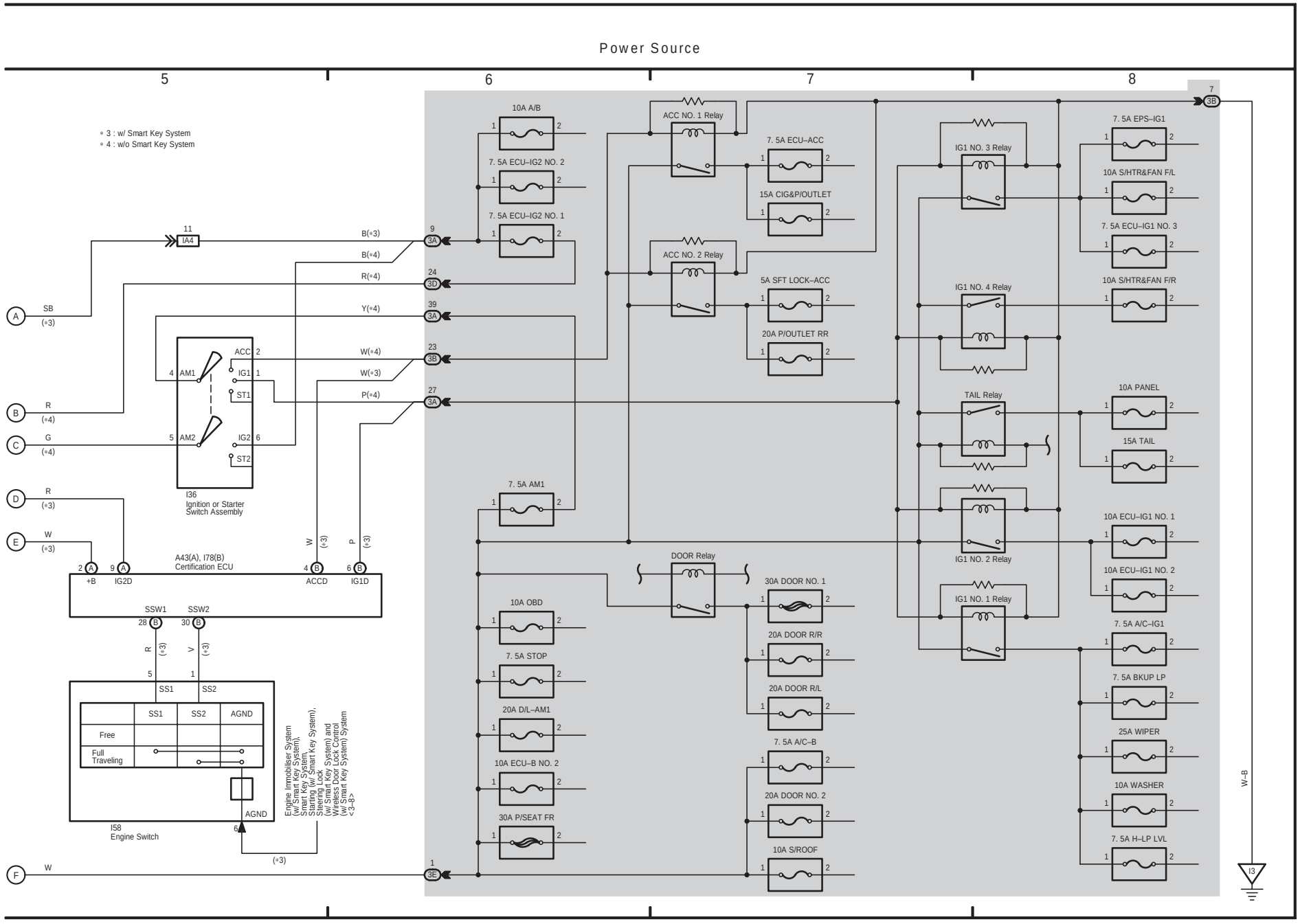
Power Source
5
6
7
8
* 3 : w/ Smart Key System
* 4 : w/o Smart Key System
10A A/B
7. 5A ECU–IG2 NO. 2
7. 5A ECU–IG2 NO. 1
ACC NO. 1 Relay
ACC NO. 2 Relay
7. 5A ECU–ACC
15A CIG&P/OUTLET
5A SFT LOCK–ACC
20A P/OUTLET RR
IG1 NO. 3 Relay
IG1 NO. 4 Relay
TAIL Relay
IG1 NO. 2 Relay
IG1 NO. 1 Relay
7. 5A EPS–IG1
10A S/HTR&FAN F/L
7. 5A ECU–IG1 NO. 3
10A S/HTR&FAN F/R
10A PANEL
15A TAIL
10A ECU–IG1 NO. 1
10A ECU–IG1 NO. 2
7. 5A A/C–IG1
7. 5A BKUP LP
25A WIPER
10A WASHER
7. 5A H–LP LVL
7. 5A AM1
DOOR Relay
30A DOOR NO. 1
20A DOOR R/R
20A DOOR R/L
7. 5A A/C–B
20A DOOR NO. 2
10A S/ROOF
10A OBD
7. 5A STOP
20A D/L–AM1
10A ECU–B NO. 2
30A P/SEAT FR
IA4
SB (*3)
R (*4)
G (*4)
R (*3)
W (*3)
B(*3)
B(*4)
R(*4)
Y(*4)
W(*4)
W(*3)
P(*4)
ACC
IG1
ST1
IG2
ST2
AM1
AM2
I36
Ignition or Starter Switch Assembly
A43(A), I78(B)
Certification ECU
+B
IG2D
ACCD
IG1D
SSW1
SSW2
SS1
SS2
AGND
Free
Full Traveling
I58
Engine Switch
Engine Immobiliser System (w/o Smart Key System), Smart Key System, Starting (w/ Smart Key System), Steering Lock (w/ Smart Key System) and Wireless Door Lock Control (w/ Smart Key System) System <3-3>
W–B
I3