(Cont. next page)

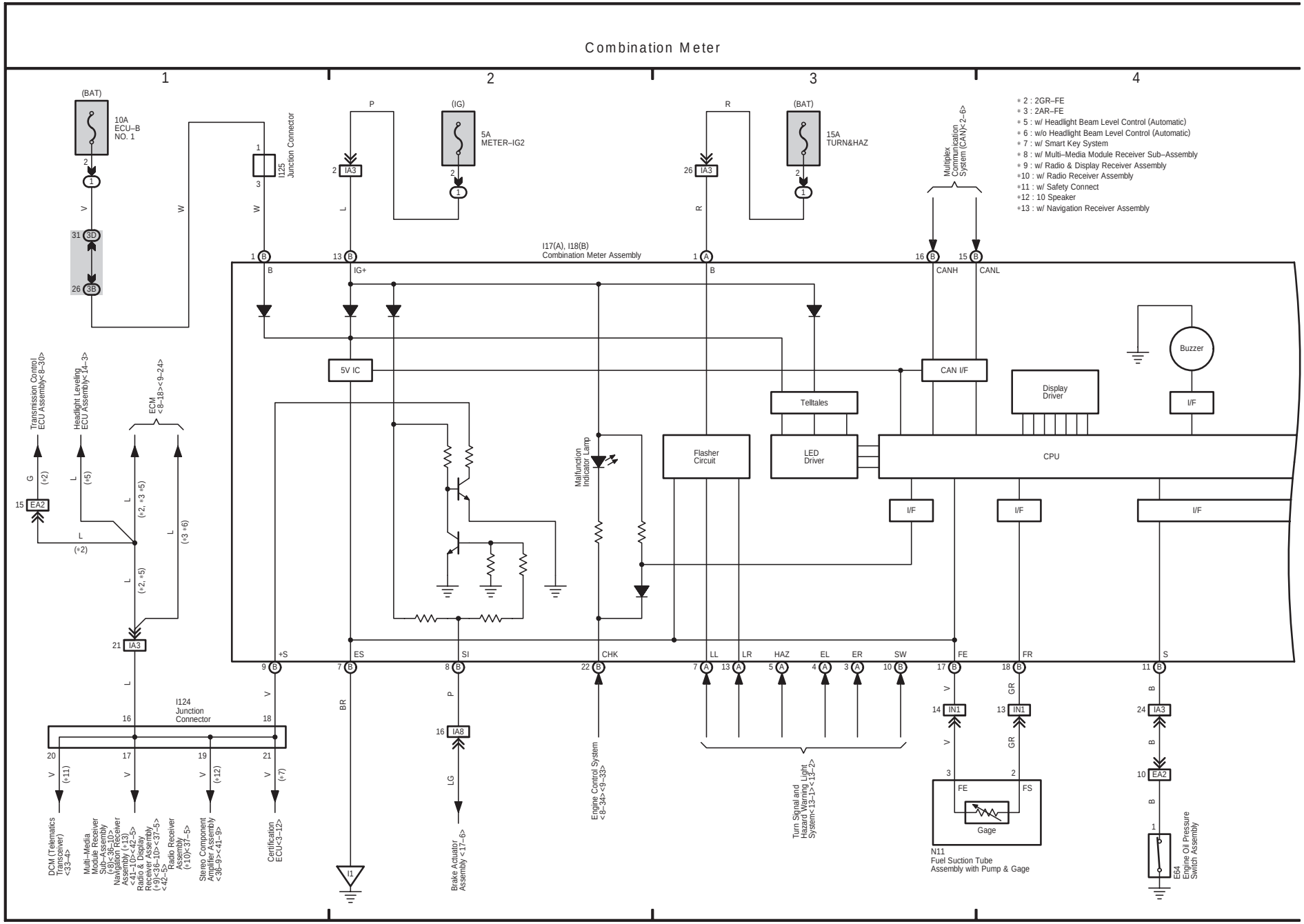

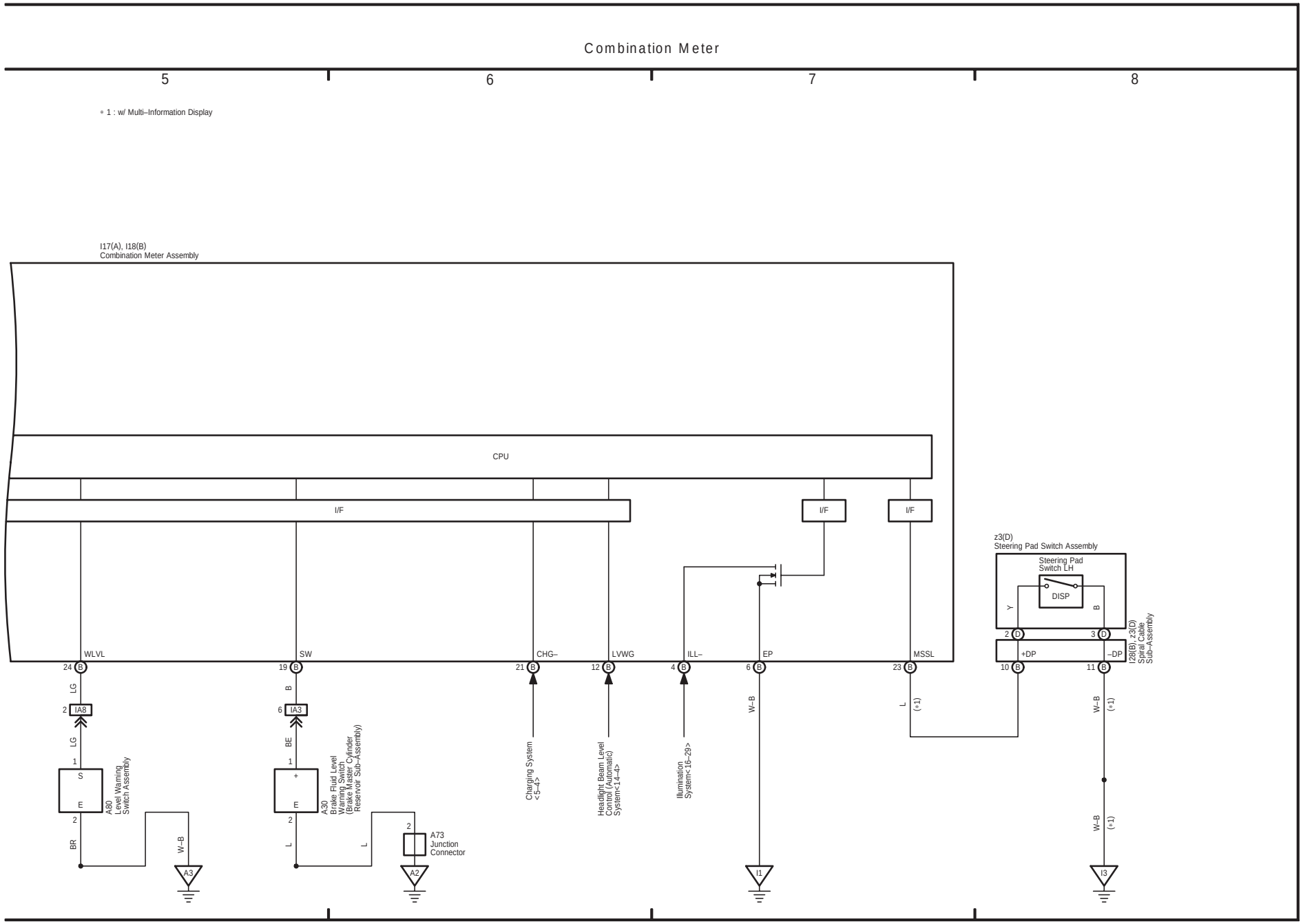
Combination Meter
5
6
7
8
* 1 : w/ Multi–Information Display
I17(A), I18(B)
Combination Meter Assembly
CPU
I/F
I/F
I/F
WLVL
SW
CHG–
LVWG
ILL–
EP
MSSL
24
19
21
12
4
6
23
LG
B
W–B
L
(*1)
2
IA8
6
IA3
LG
BE
1
S
E
2
BR
1
+
E
2
L
L
A80
Level Warning
Switch Assembly
A30
Brake Fluid Level
Warning Switch
(Brake Master Cylinder
Reservoir Sub–Assembly)
A73
Junction
Connector
W–B
A3
A2
Charging System
<5–4>
Headlight Beam Level
Control (Automatic)
System<14–4>
Illumination
System<16–29>
I1
z3(D)
Steering Pad Switch Assembly
Steering Pad
Switch LH
DISP
Y
B
2
3
+DP
–DP
10
11
I28(B), z3(D)
Spiral Cable
Sub–Assembly
W–B
(*1)
W–B
(*1)
I3