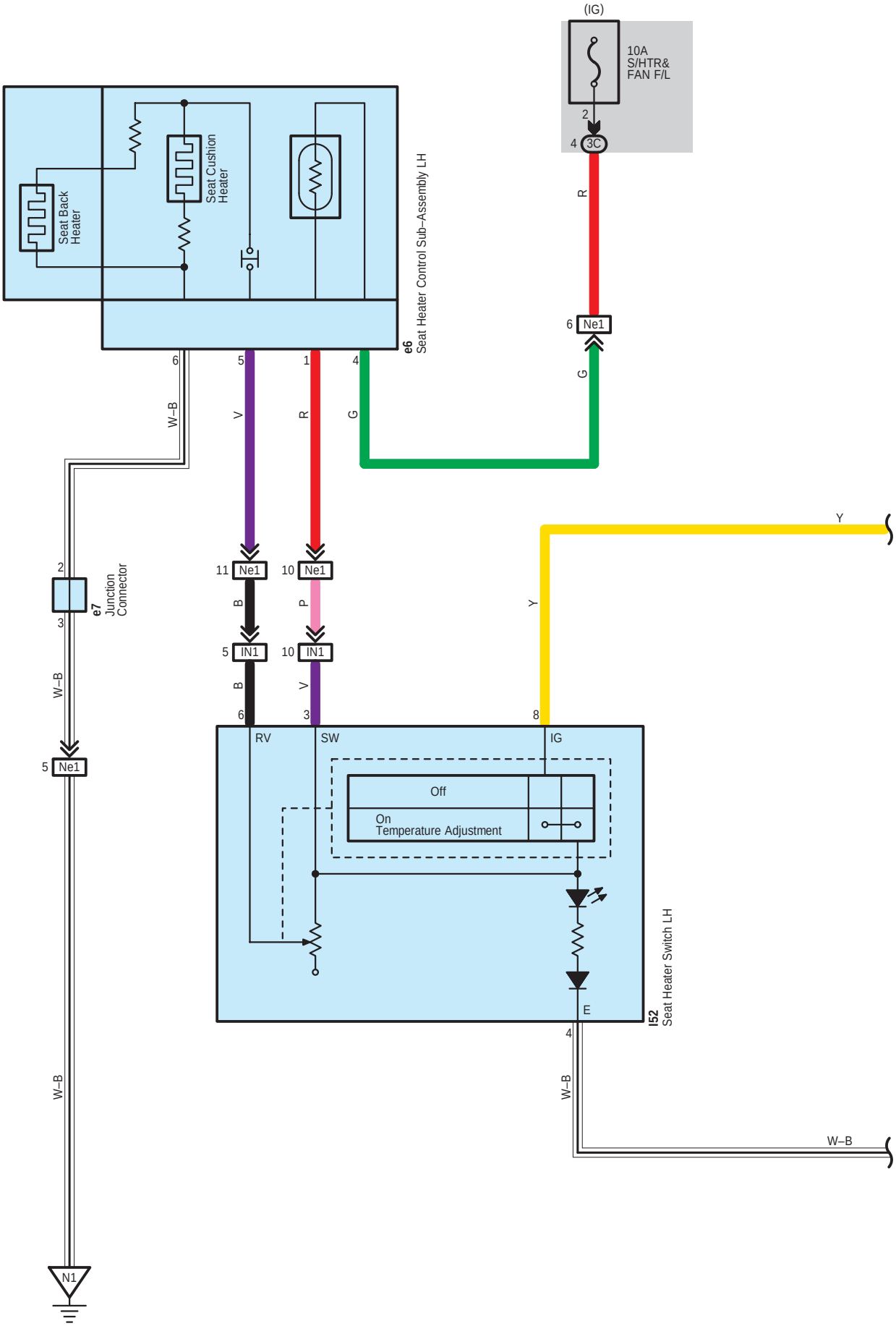
(IG)
10A
S/HTR&
FAN F/L
2
4
3C
R
6
Ne1
G
Seat Back
Heater
Seat Cushion
Heater
e6
Seat Heater Control Sub–Assembly LH
6
5
1
4
W–B
V
R
G
Y
2
3
e7
Junction
Connector
W–B
5
Ne1
11
Ne1
10
Ne1
B
P
5
IN1
10
IN1
B
V
6
3
8
Y
RV
SW
IG
Off
On
Temperature Adjustment
E
4
I52
Seat Heater Switch LH
W–B
W–B
W–B
N1

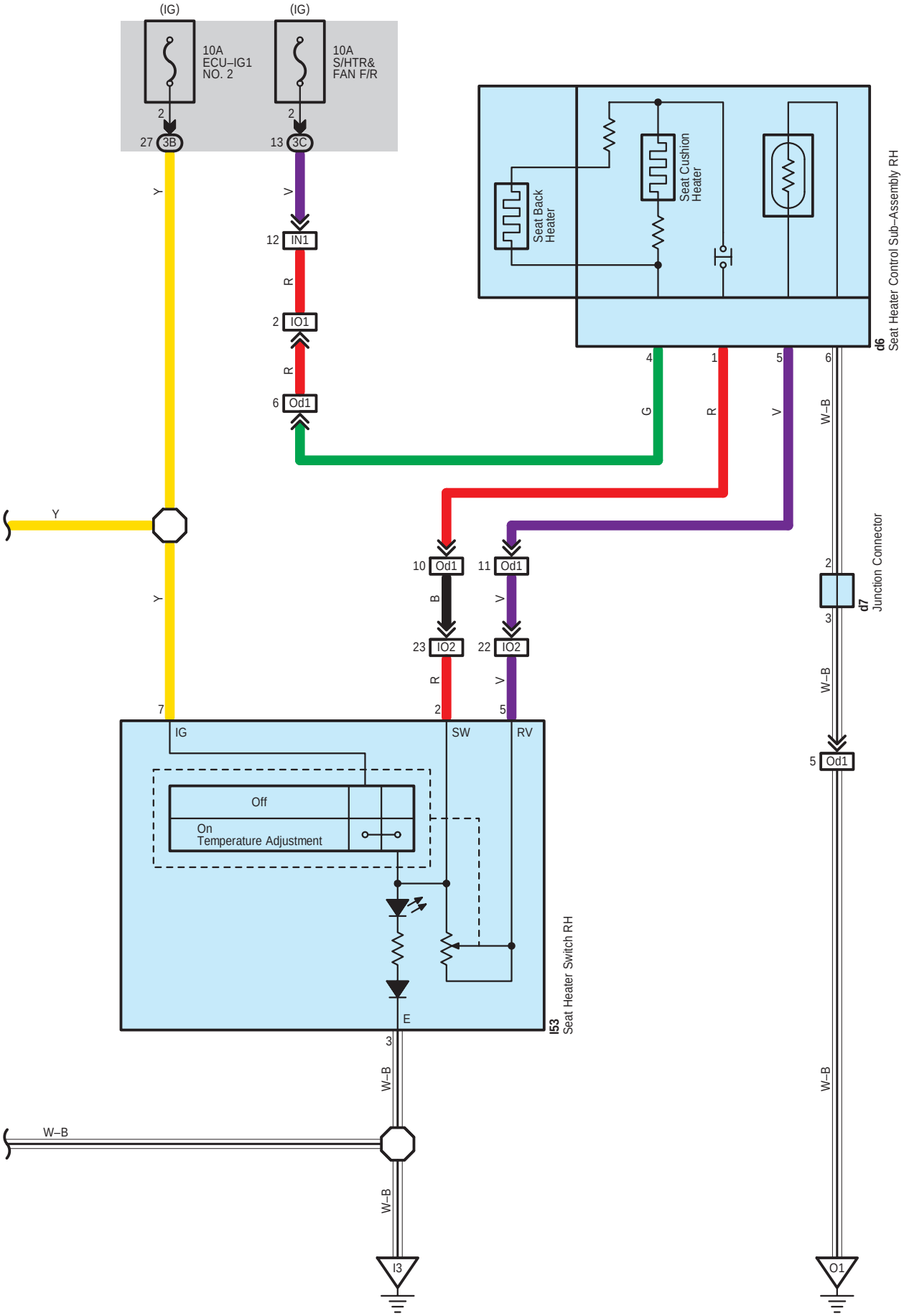
(IG)
10A
ECU–IG1
NO. 2
(IG)
10A
S/HTR&
FAN F/R
2
27 3B
2
13 3C
Y
V
12 IN1
R
2 IO1
R
6 Od1
Seat Back
Heater
Seat Cushion
Heater
d6
Seat Heater Control Sub–Assembly RH
4
1
5
6
G
R
V
W–B
Y
Y
10 Od1
11 Od1
B
V
23 IO2
22 IO2
R
V
2
d7
Junction Connector
3
W–B
5 Od1
7
2
5
IG
SW
RV
Off
On
Temperature Adjustment
E
I53
Seat Heater Switch RH
3
W–B
W–B
W–B
W–B
I3
O1

I 52
Black

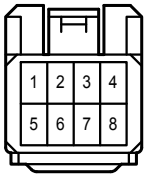

I 53
Black

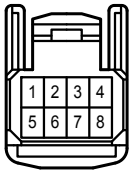

d 6
White

d 7
White

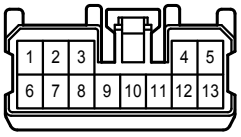

e 6
White

e 7
White

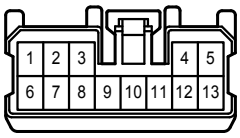

3B
White

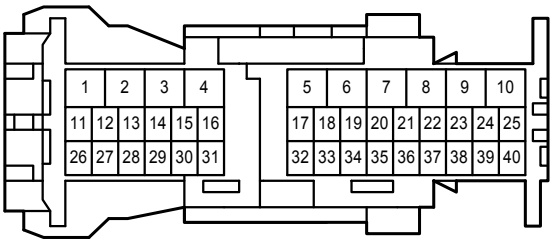

3C
White

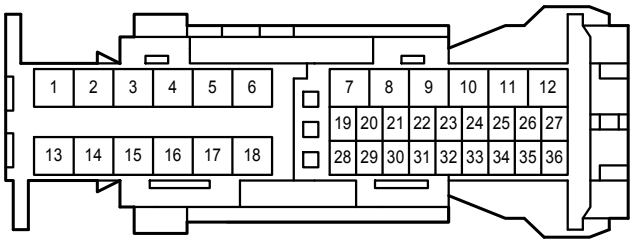

IN1
White

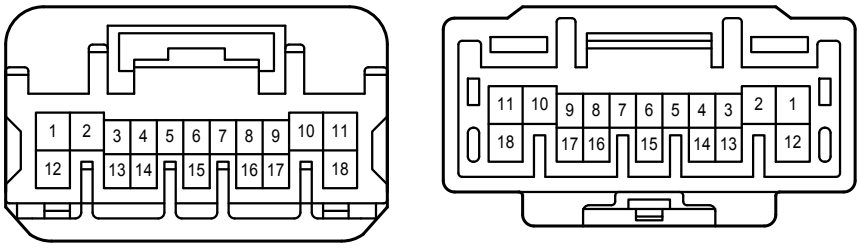

IO1
White

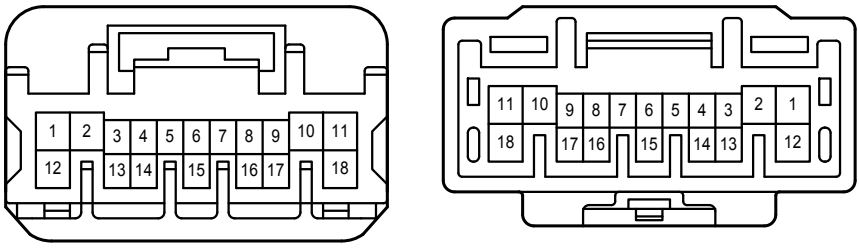

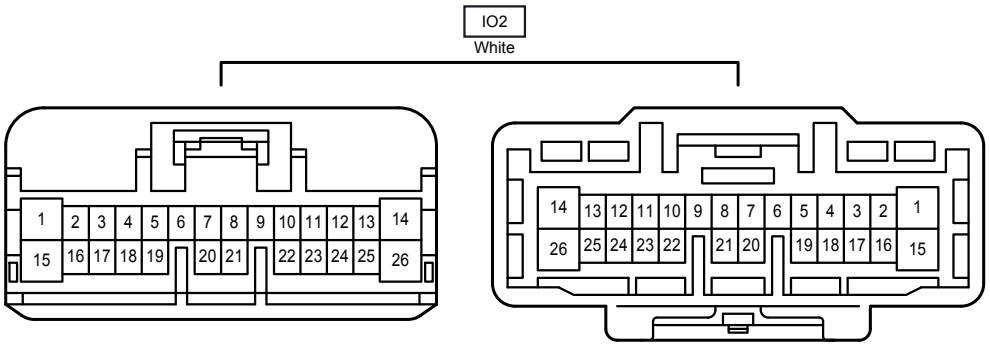
IO2
White
1 2 3 4 5 6 7 8 9 10 11 12 13 14
15 16 17 18 19 20 21 22 23 24 25 26
14 13 12 11 10 9 8 7 6 5 4 3 2 1
26 25 24 23 22 21 20 19 18 17 16 15

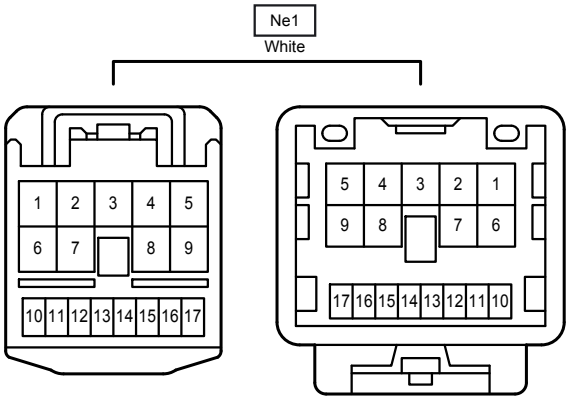
Ne1
White
1 2 3 4 5
6 7 8 9
10 11 12 13 14 15 16 17
5 4 3 2 1
9 8 7 6
17 16 15 14 13 12 11 10

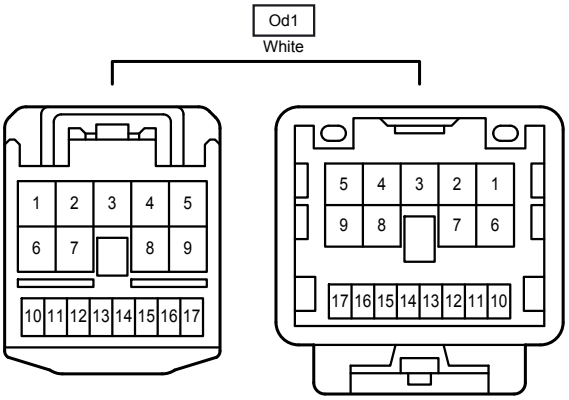
Od1
White
1 2 3 4 5
6 7 8 9
10 11 12 13 14 15 16 17
5 4 3 2 1
9 8 7 6
17 16 15 14 13 12 11 10