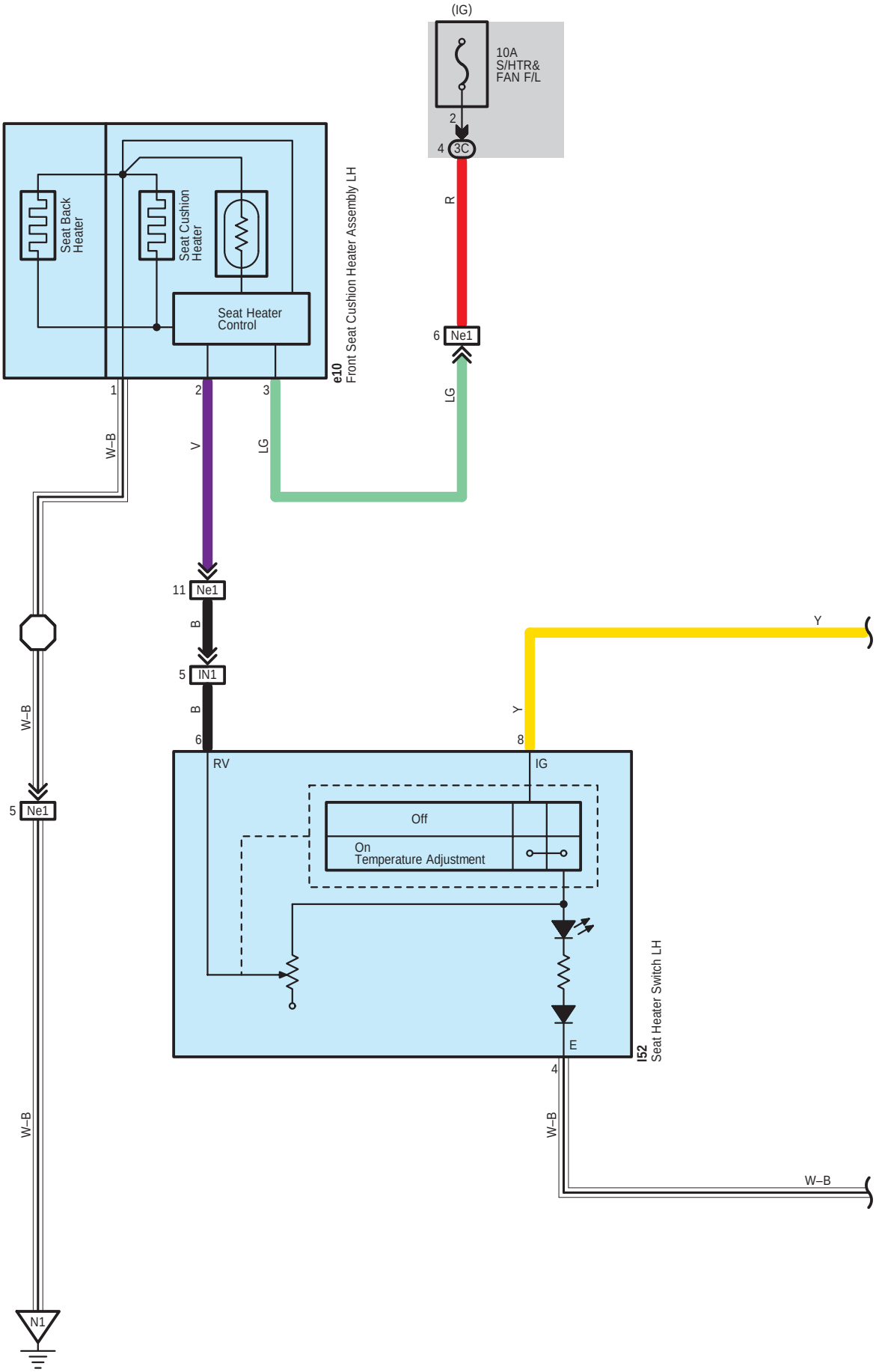
(IG)
10A
S/HTR&
FAN F/L
2
4
3C
R
6
Ne1
LG
Seat Back
Heater
Seat Cushion
Heater
Seat Heater
Control
e10
Front Seat Cushion Heater Assembly LH
1
2
3
W–B
V
LG
11
Ne1
B
5
IN1
B
6
W–B
5
Ne1
W–B
N1
Y
Y
8
RV
IG
Off
On
Temperature Adjustment
E
4
I52
Seat Heater Switch LH
W–B
W–B

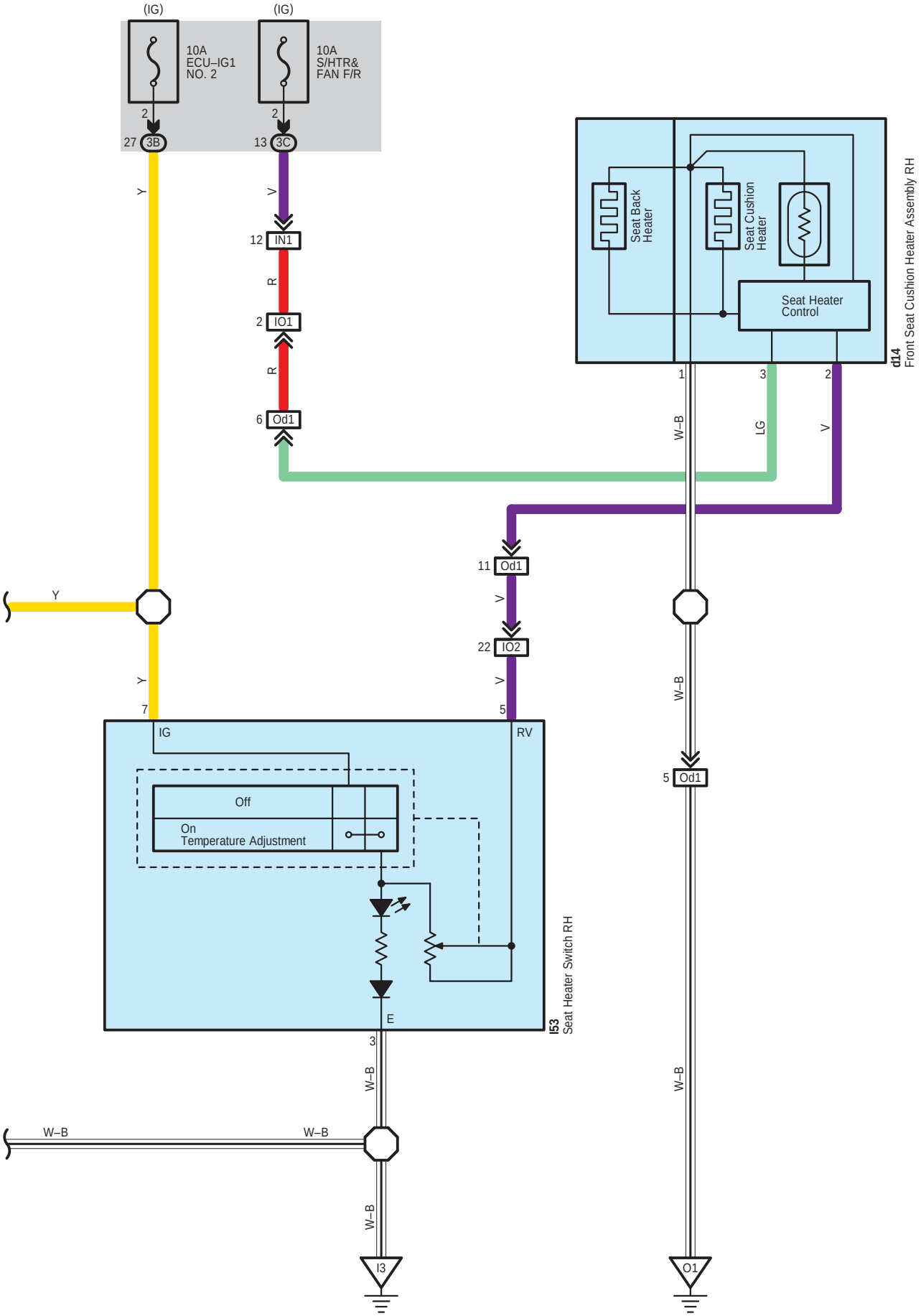
(IG)
(IG)
10A
ECU–IG1
NO. 2
10A
S/HTR&
FAN F/R
2
2
27 3B
13 3C
Y
V
12 IN1
R
2 IO1
R
6 Od1
Seat Back
Heater
Seat Cushion
Heater
Seat Heater
Control
d14
Front Seat Cushion Heater Assembly RH
1
3
2
W–B
LG
V
11 Od1
V
22 IO2
V
Y
Y
7
5
IG
RV
Off
On
Temperature Adjustment
E
I53
Seat Heater Switch RH
3
W–B
W–B
W–B
W–B
W–B
5 Od1
W–B
I3
O1

I 52
Black

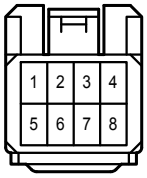

I 53
Black

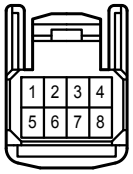

d 14
White

e 10
White

3B
White

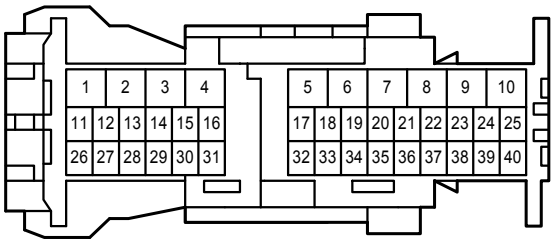

3C
White

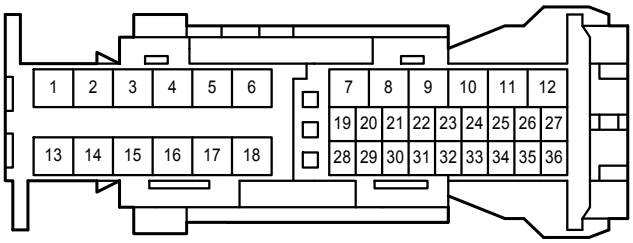

IN1
White

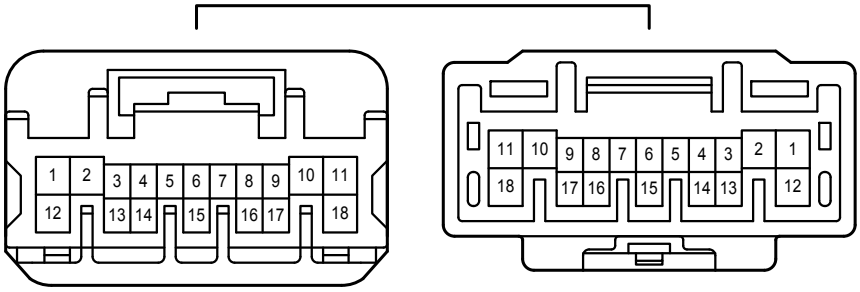

IO1
White

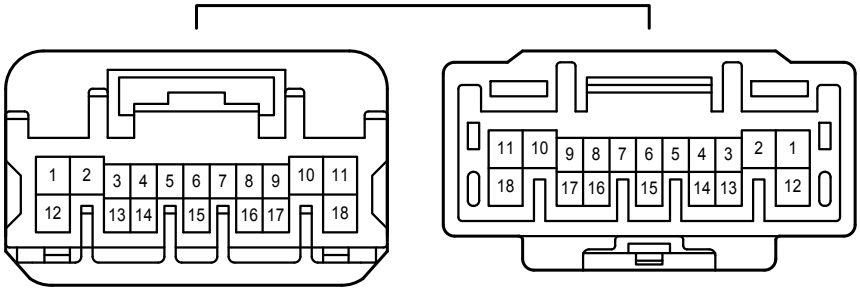

IO2
White

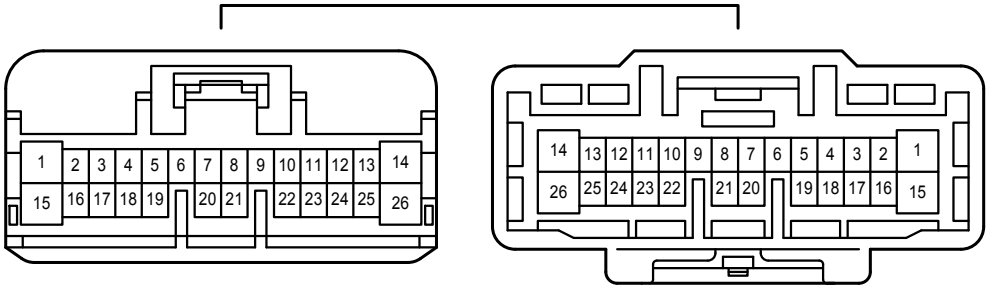

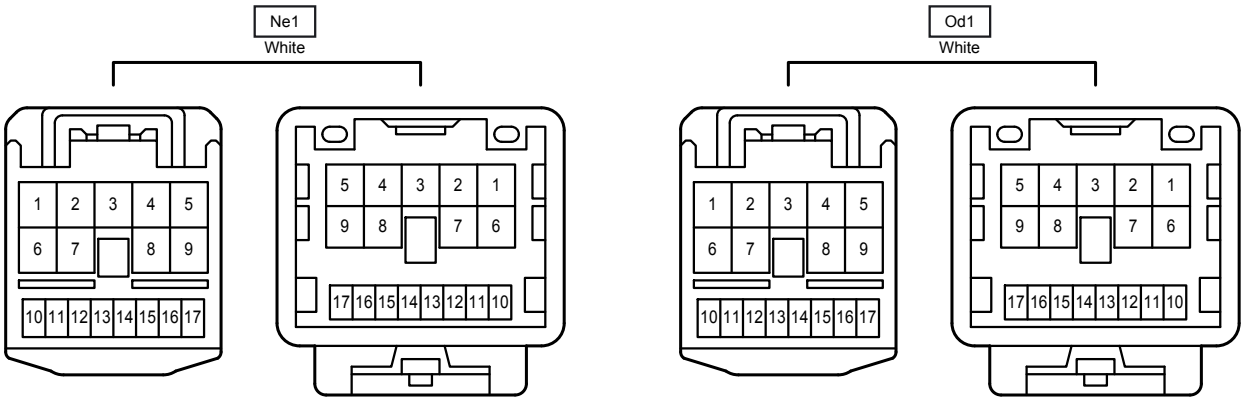
Ne1
White
1 2 3 4 5
6 7 8 9
10 11 12 13 14 15 16 17
5 4 3 2 1
9 8 7 6
17 16 15 14 13 12 11 10
Od1
White
1 2 3 4 5
6 7 8 9
10 11 12 13 14 15 16 17
5 4 3 2 1
9 8 7 6
17 16 15 14 13 12 11 10