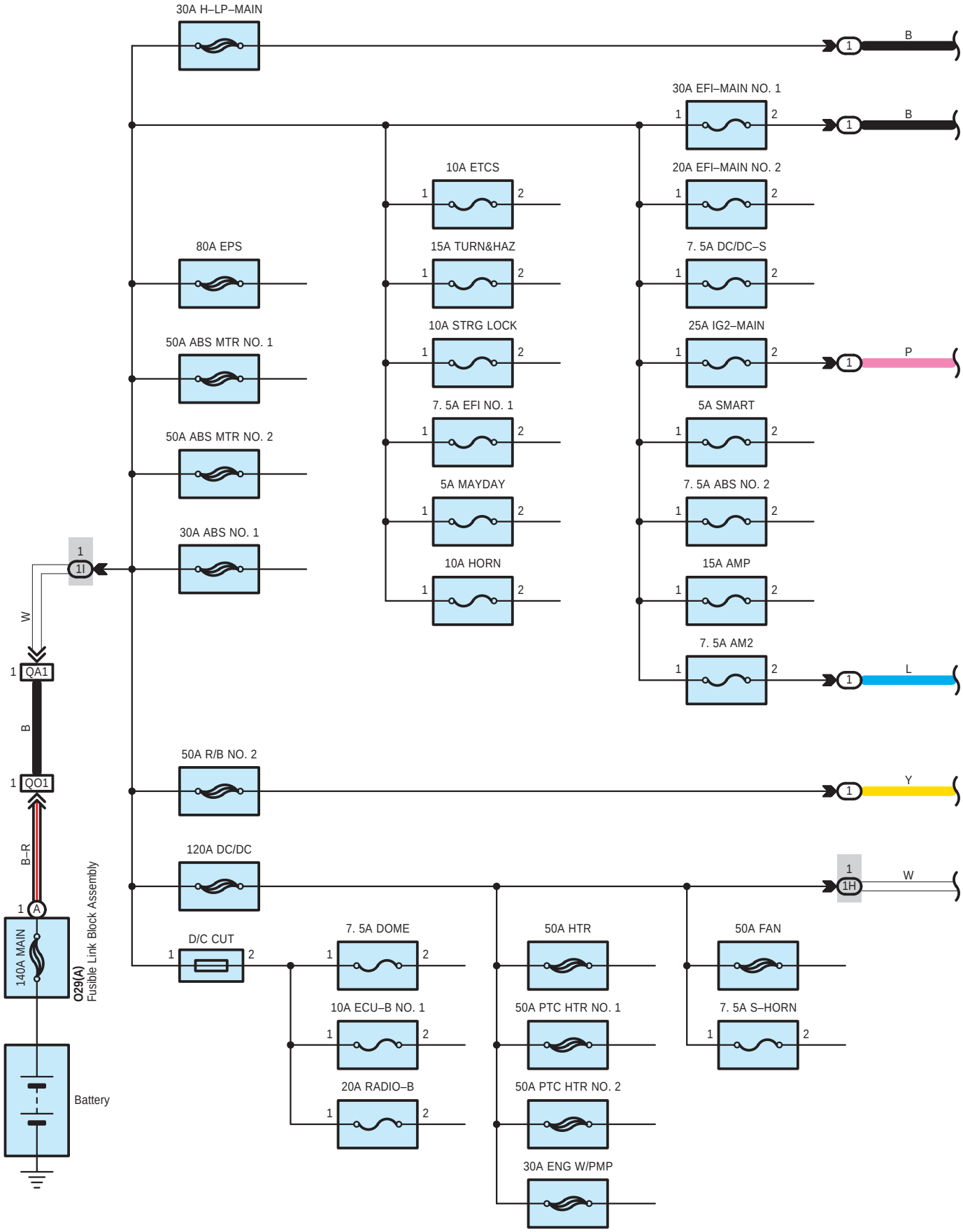
30A H–LP–MAIN
B
30A EFI–MAIN NO. 1
B
10A ETCS
20A EFI–MAIN NO. 2
80A EPS
15A TURN&HAZ
7. 5A DC/DC–S
10A STRG LOCK
25A IG2–MAIN
P
50A ABS MTR NO. 1
7. 5A EFI NO. 1
5A SMART
50A ABS MTR NO. 2
5A MAYDAY
7. 5A ABS NO. 2
30A ABS NO. 1
10A HORN
15A AMP
7. 5A AM2
L
W
QA1
B
QO1
50A R/B NO. 2
Y
B–R
120A DC/DC
W
140A MAIN
O29(A)
Fusible Link Block Assembly
D/C CUT
7. 5A DOME
50A HTR
50A FAN
10A ECU–B NO. 1
50A PTC HTR NO. 1
7. 5A S–HORN
20A RADIO–B
50A PTC HTR NO. 2
30A ENG W/PMP
Battery

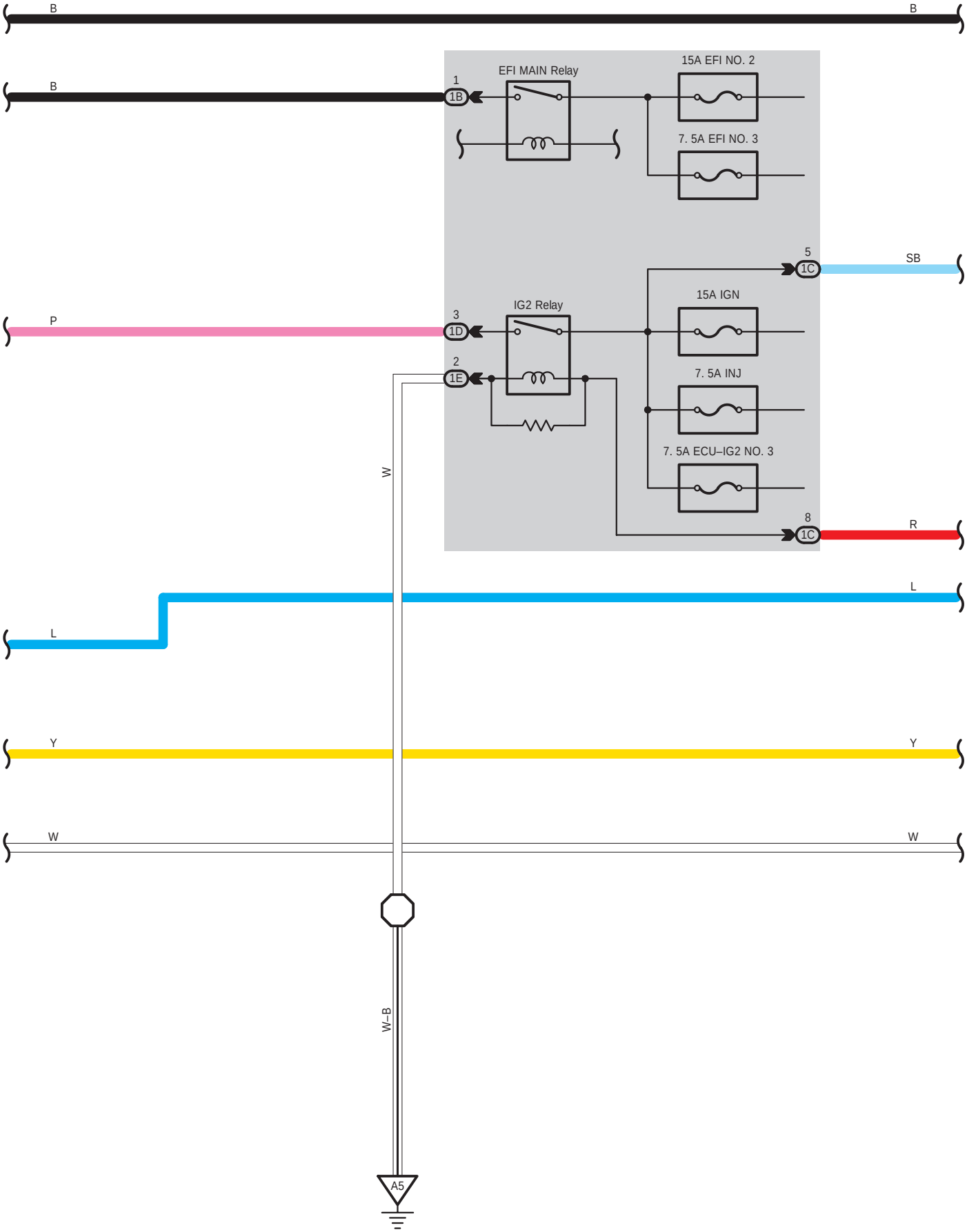
B
B
B
EFI MAIN Relay
1
1B
15A EFI NO. 2
7. 5A EFI NO. 3
5
1C
SB
15A IGN
IG2 Relay
P
3
1D
2
1E
7. 5A INJ
7. 5A ECU–IG2 NO. 3
W
8
1C
R
L
L
Y
Y
W
W
W–B
A5

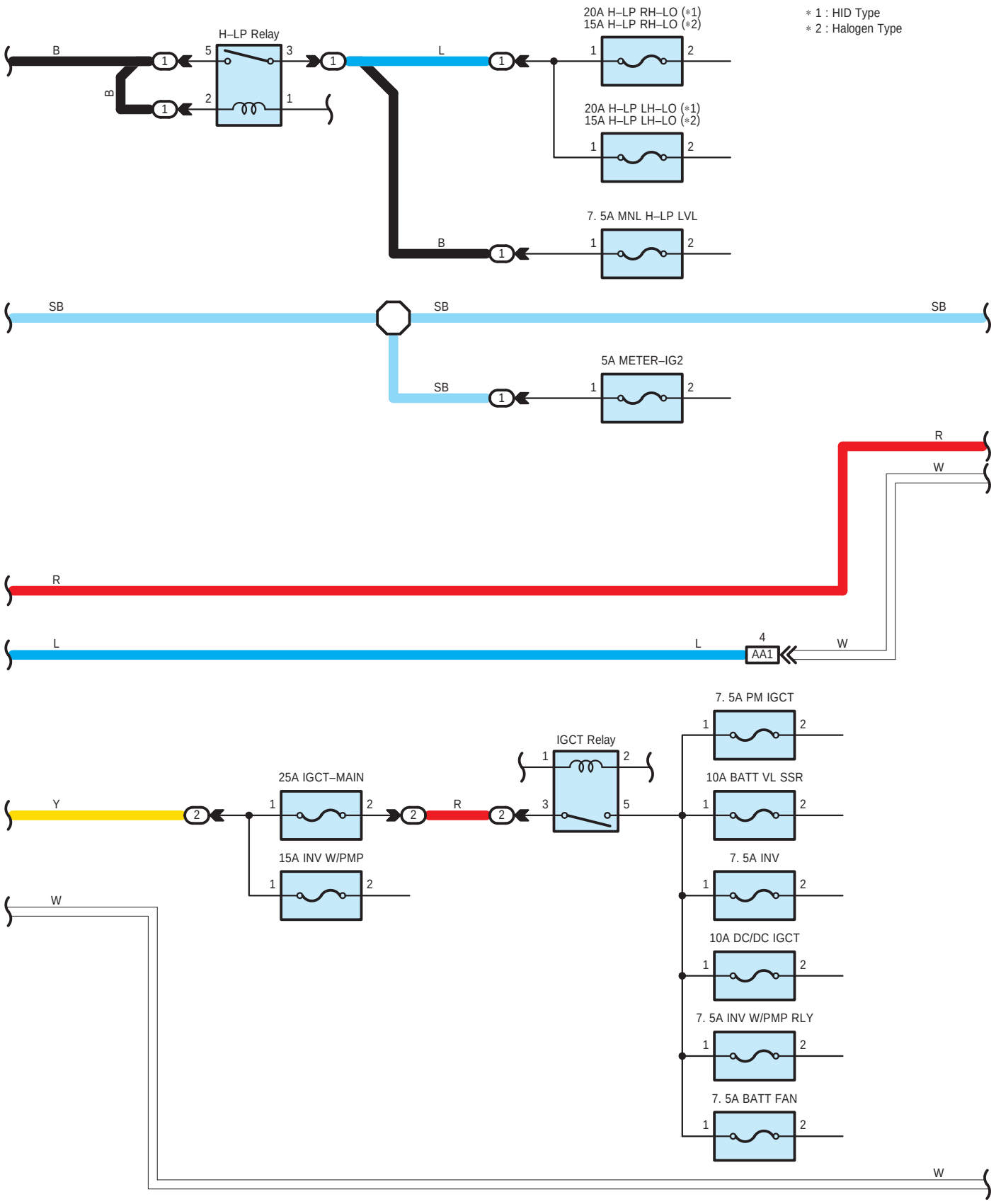

* 1 : HID Type
* 2 : Halogen Type

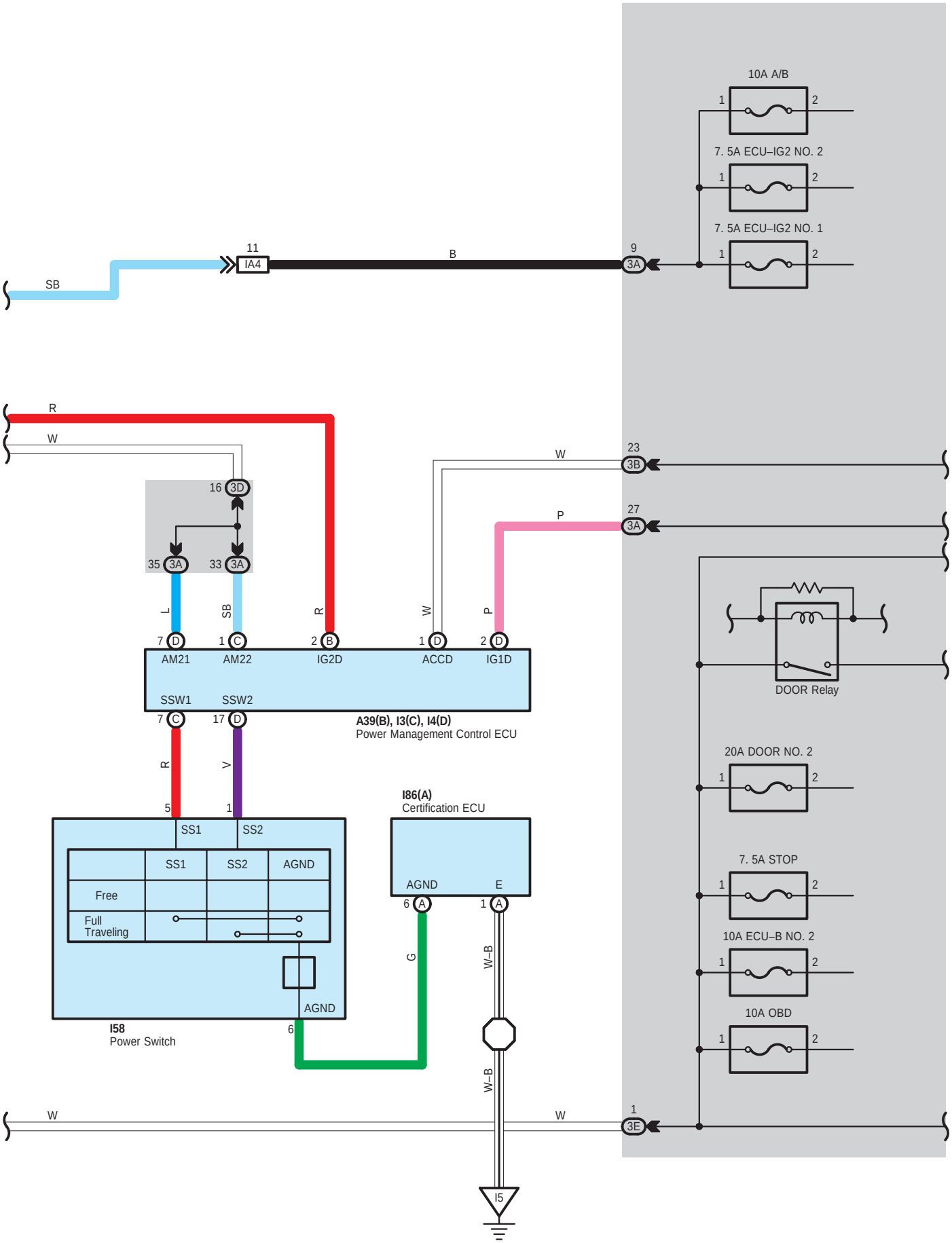
10A A/B
7. 5A ECU–IG2 NO. 2
7. 5A ECU–IG2 NO. 1
11
IA4
B
9
3A
SB
R
W
23
3B
16
3D
27
3A
P
35
3A
33
3A
L
SB
R
W
P
7
D
1
C
2
B
1
D
2
D
AM21
AM22
IG2D
ACCD
IG1D
SSW1
SSW2
7
C
17
D
A39(B), I3(C), I4(D)
Power Management Control ECU
DOOR Relay
R
V
20A DOOR NO. 2
5
1
SS1
SS2
I86(A)
Certification ECU
SS1
SS2
AGND
Free
Full Traveling
AGND
E
6
A
1
A
7. 5A STOP
10A ECU–B NO. 2
G
W–B
AGND
I58
Power Switch
6
10A OBD
W–B
W
W
1
3E
I5

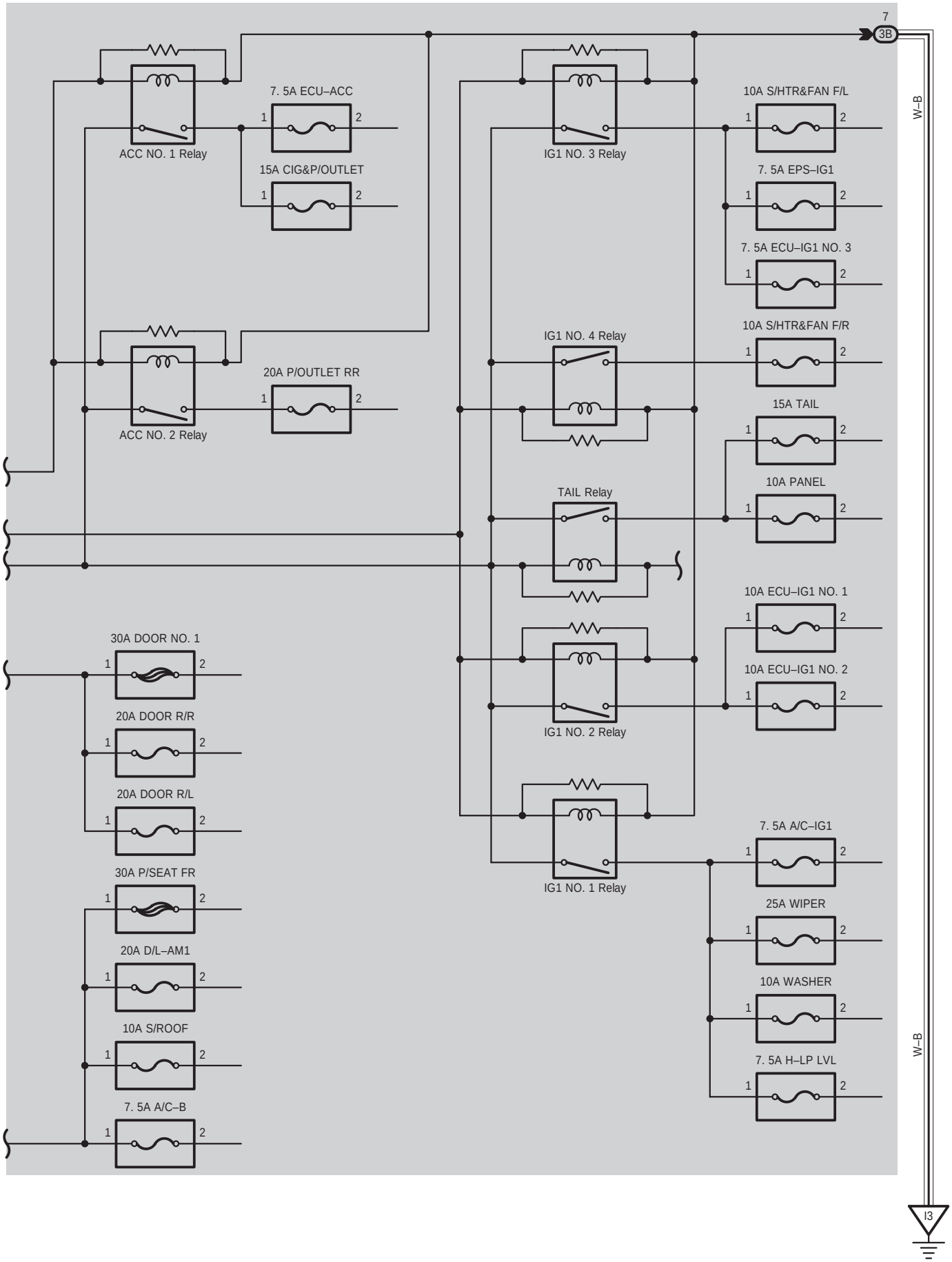
7
3B
W–B
ACC NO. 1 Relay
7. 5A ECU–ACC
15A CIG&P/OUTLET
ACC NO. 2 Relay
20A P/OUTLET RR
IG1 NO. 3 Relay
IG1 NO. 4 Relay
TAIL Relay
IG1 NO. 2 Relay
IG1 NO. 1 Relay
10A S/HTR&FAN F/L
7. 5A EPS–IG1
7. 5A ECU–IG1 NO. 3
10A S/HTR&FAN F/R
15A TAIL
10A PANEL
10A ECU–IG1 NO. 1
10A ECU–IG1 NO. 2
7. 5A A/C–IG1
25A WIPER
10A WASHER
7. 5A H–LP LVL
30A DOOR NO. 1
20A DOOR R/R
20A DOOR R/L
30A P/SEAT FR
20A D/L–AM1
10A S/ROOF
7. 5A A/C–B
W–B
I3

A 39
Gray

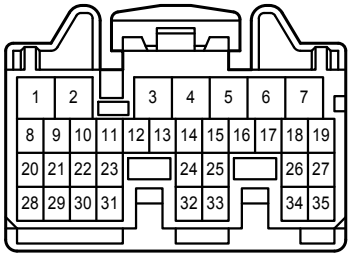

I 3
Gray

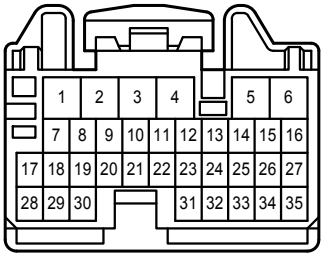

I 4
Gray

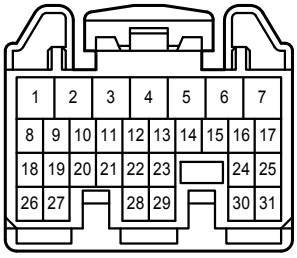

I 58
Black

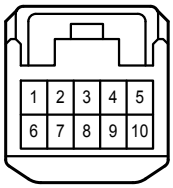

I 86
White

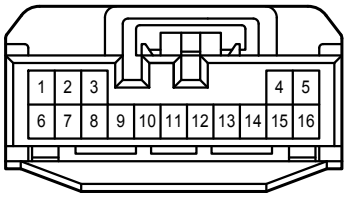

O 29

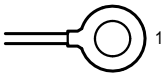

1B
White

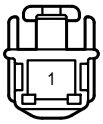

1C
White

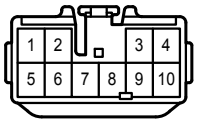

1D
White

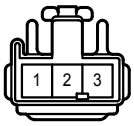

1E
White

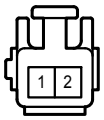

1H
White

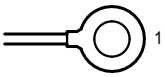

1I
White

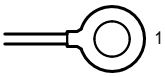

3A
White

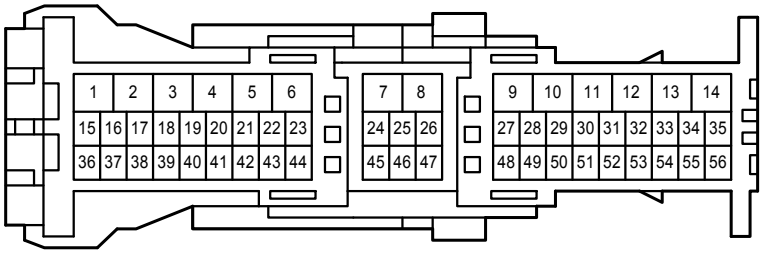

3B
White

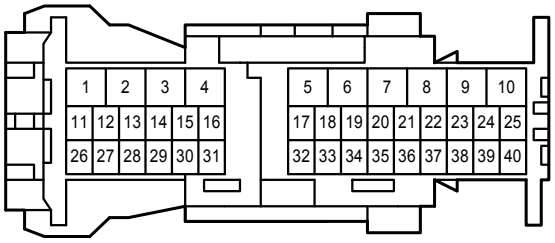

3D
White

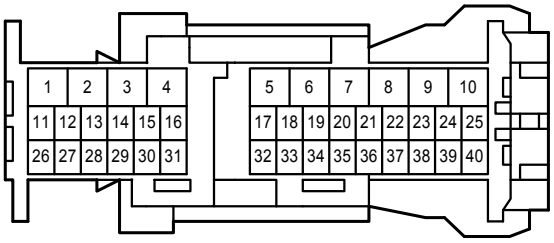

3E
White

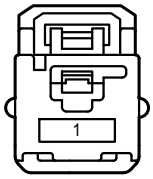

AA1
Blue

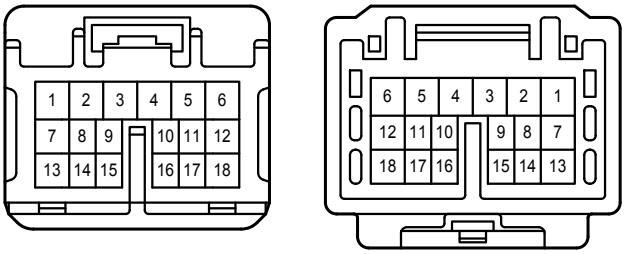

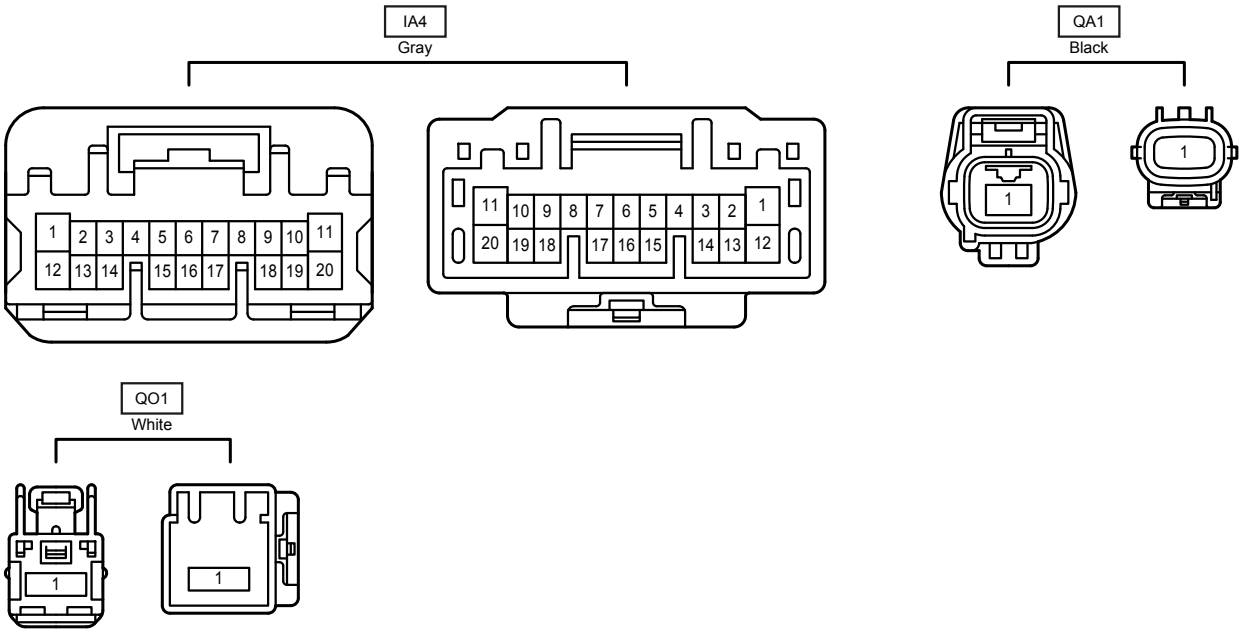
IA4
Gray
1 2 3 4 5 6 7 8 9 10 11
12 13 14 15 16 17 18 19 20
11 10 9 8 7 6 5 4 3 2 1
20 19 18 17 16 15 14 13 12
QA1
Black
1
1
QO1
White
1
1