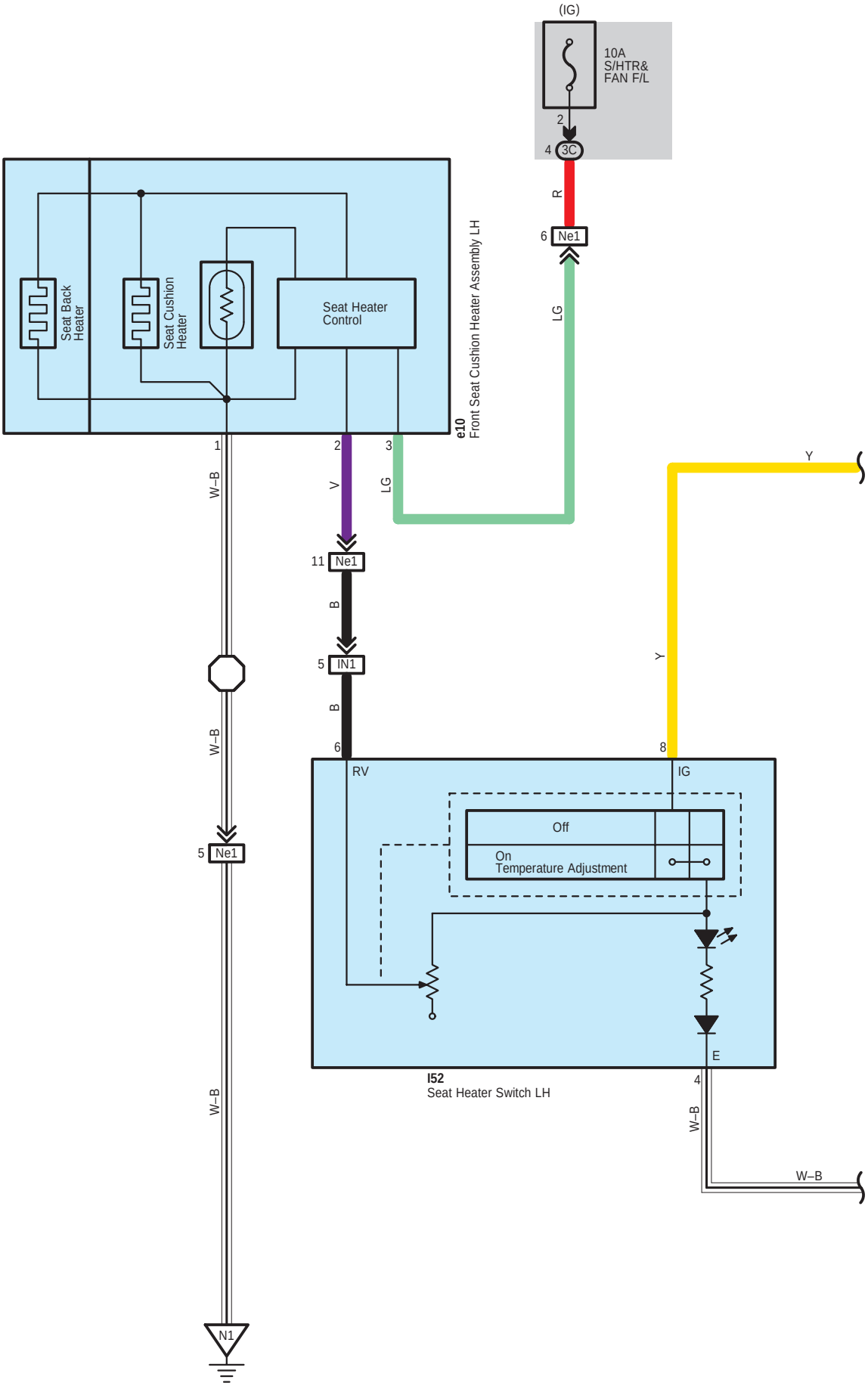
(IG)
10A
S/HTR&
FAN F/L
2
4
3C
R
6
Ne1
LG
Seat Back
Heater
Seat Cushion
Heater
Seat Heater
Control
e10
Front Seat Cushion Heater Assembly LH
1
2
3
W–B
V
LG
Y
11
Ne1
B
5
IN1
B
Y
6
8
RV
IG
Off
On
Temperature Adjustment
5
Ne1
E
I52
Seat Heater Switch LH
4
W–B
W–B
W–B
N1

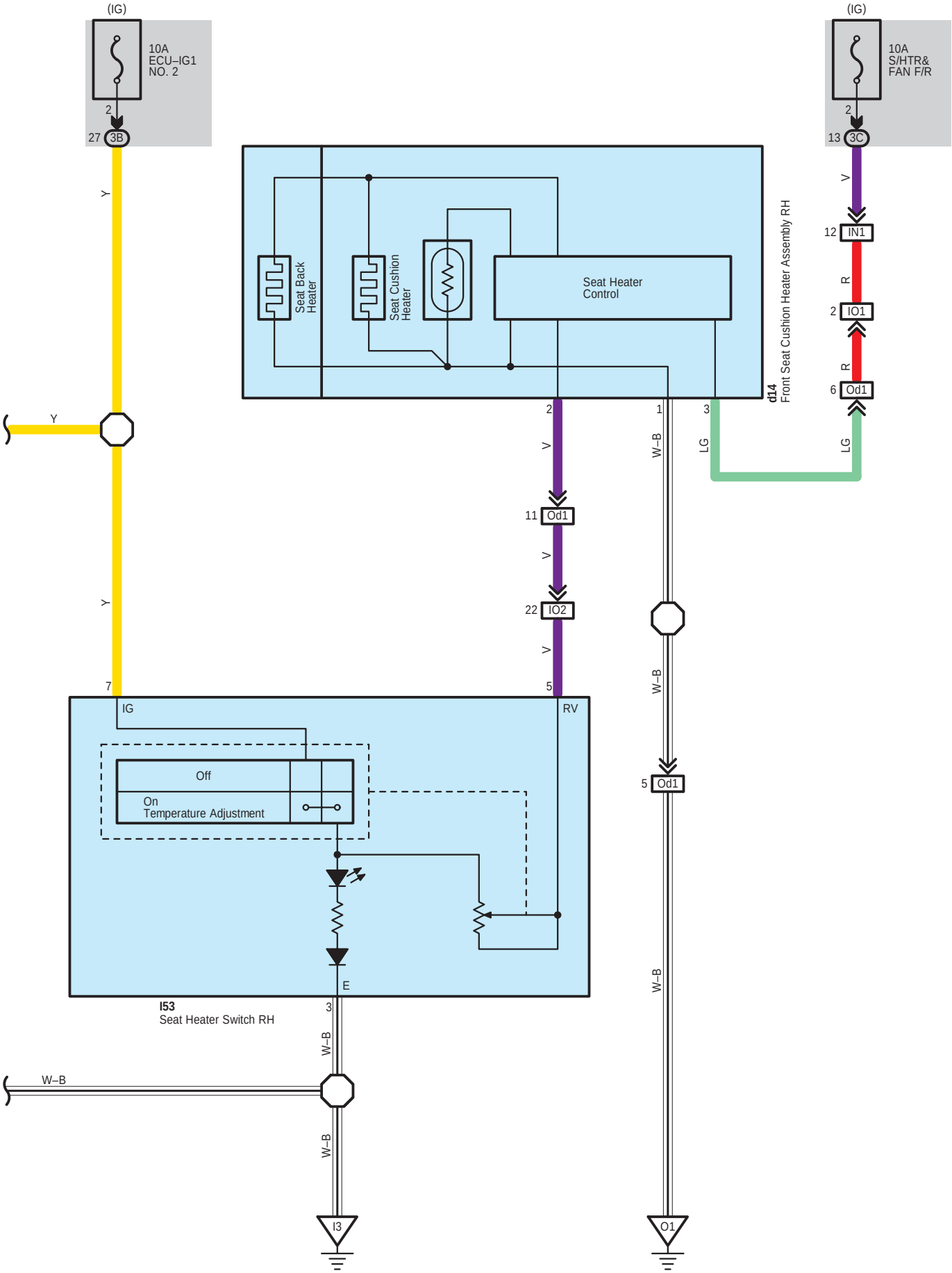
(IG)
10A
ECU–IG1
NO. 2
2
27 3B
(IG)
10A
S/HTR&
FAN F/R
2
13 3C
Seat Back
Heater
Seat Cushion
Heater
Seat Heater
Control
d14
Front Seat Cushion Heater Assembly RH
12 IN1
2 IO1
6 Od1
11 Od1
22 IO2
5 Od1
Y
V
R
LG
W–B
2
1
3
7
5
IG
RV
Off
On
Temperature Adjustment
E
3
I53
Seat Heater Switch RH
I3
O1

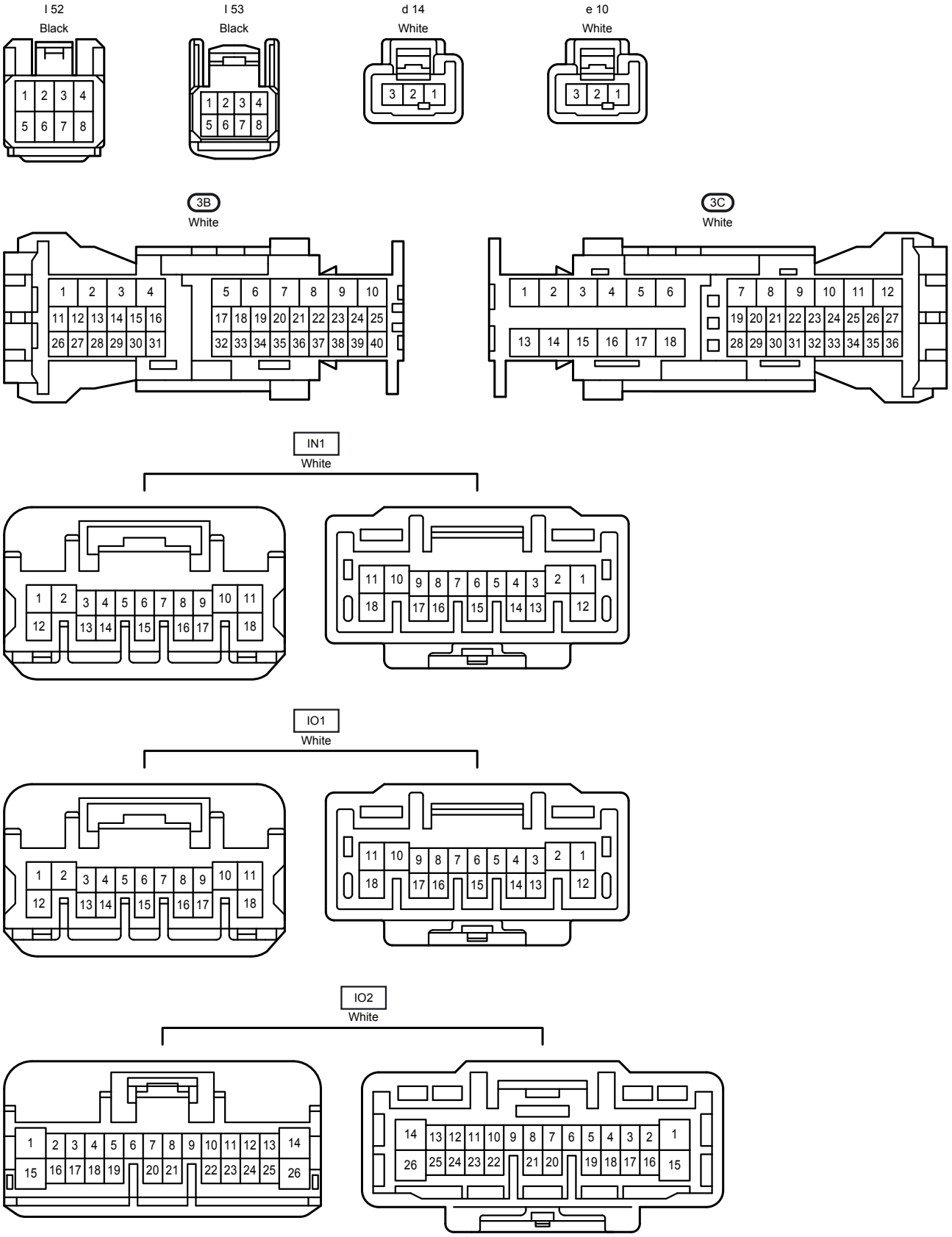
I 52
Black
I 53
Black
d 14
White
e 10
White
3B
White
3C
White
IN1
White
IO1
White
IO2
White

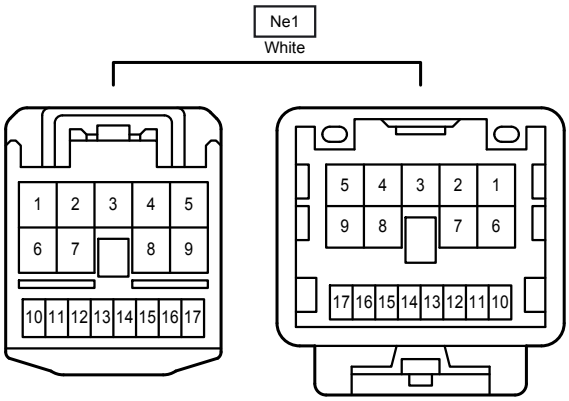
Ne1
White
1 2 3 4 5
6 7 8 9
10 11 12 13 14 15 16 17
5 4 3 2 1
9 8 7 6
17 16 15 14 13 12 11 10

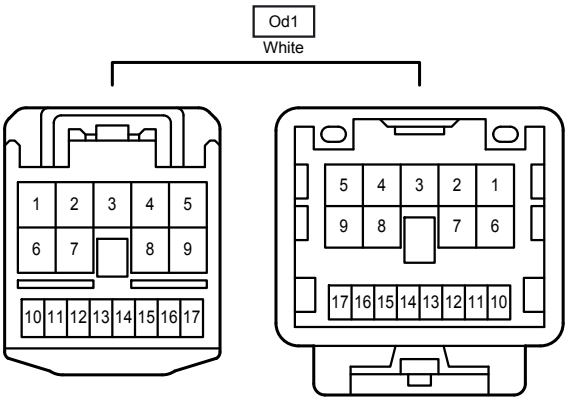
Od1
White
1 2 3 4 5
6 7 8 9
10 11 12 13 14 15 16 17
5 4 3 2 1
9 8 7 6
17 16 15 14 13 12 11 10