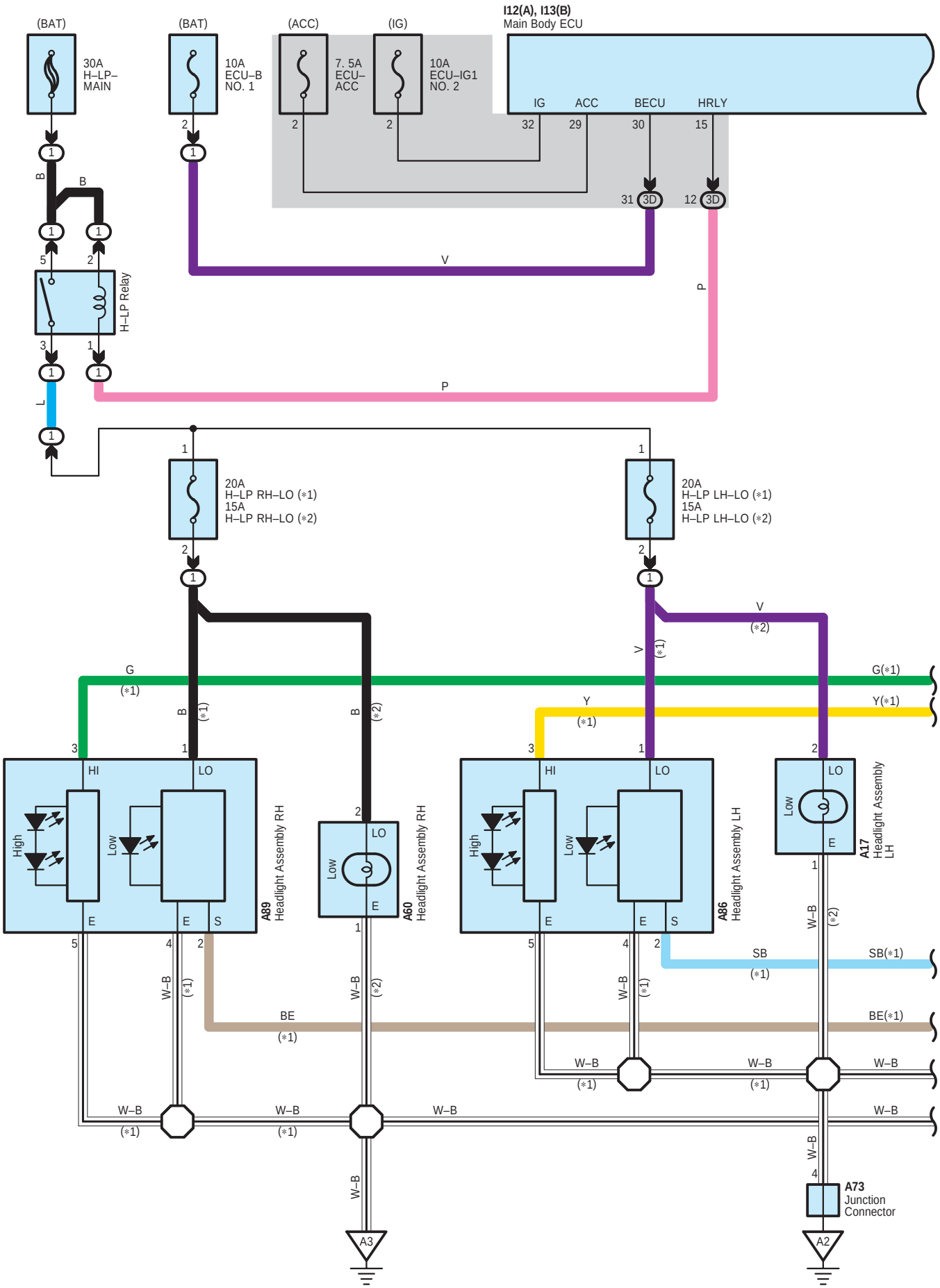
(BAT)
30A
H–LP–
MAIN
(BAT)
10A
ECU–B
NO. 1
(ACC)
7. 5A
ECU–
ACC
(IG)
10A
ECU–IG1
NO. 2
I12(A), I13(B)
Main Body ECU
IG
ACC
BECU
HRLY
32
29
30
15
31
3D
12
3D
H–LP Relay
20A
H–LP RH–LO (*1)
15A
H–LP RH–LO (*2)
20A
H–LP LH–LO (*1)
15A
H–LP LH–LO (*2)
G
(*1)
G(*1)
Y
(*1)
Y(*1)
V
(*2)
V
(*1)
B
(*1)
B
(*2)
HI
LO
High
Low
E
S
A89
Headlight Assembly RH
A60
Headlight Assembly RH
A86
Headlight Assembly LH
A17
Headlight Assembly
LH
W–B
(*1)
(*2)
SB
(*1)
SB(*1)
BE
(*1)
BE(*1)
A73
Junction
Connector
A3
A2

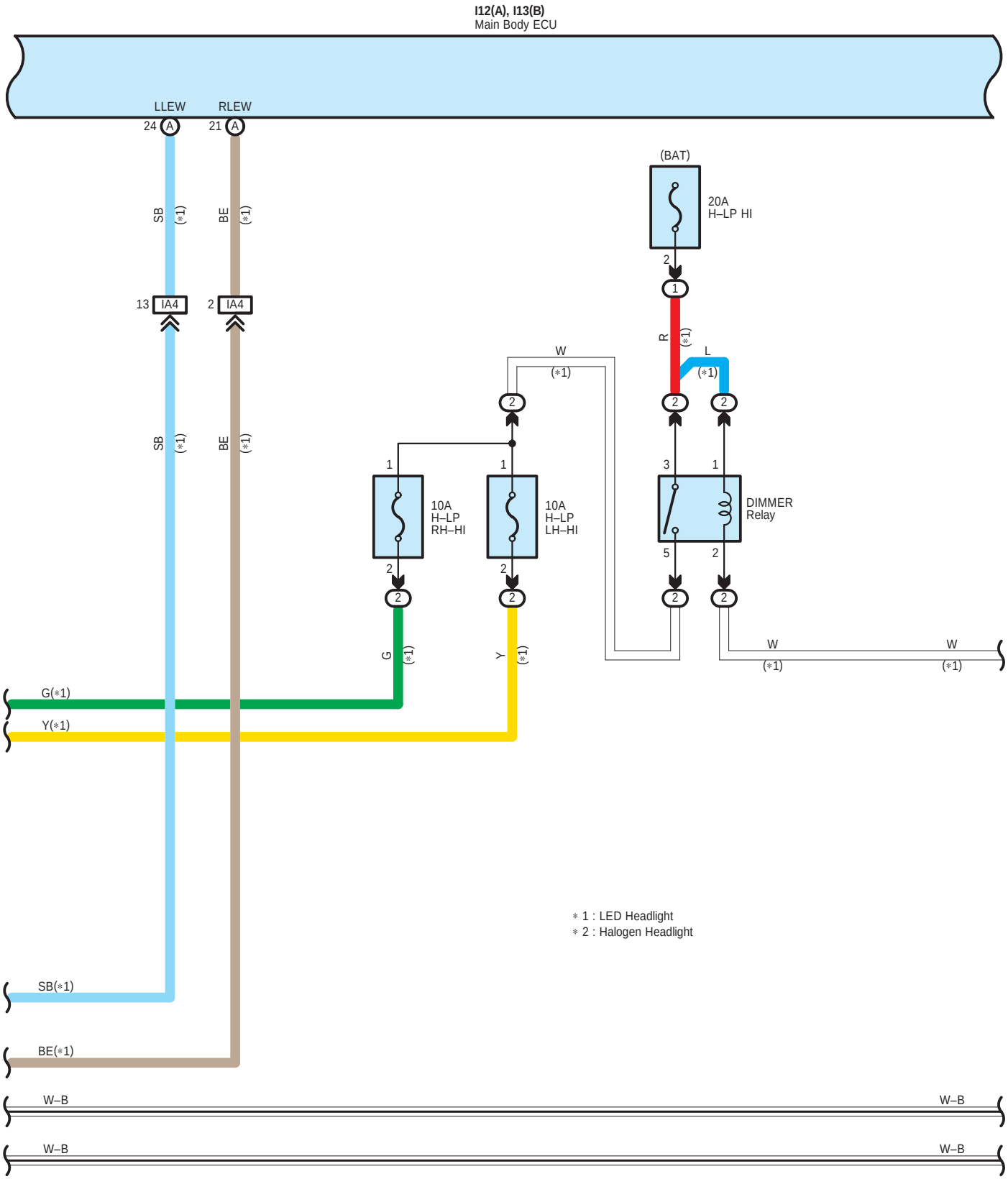

* 1 : LED Headlight
* 2 : Halogen Headlight

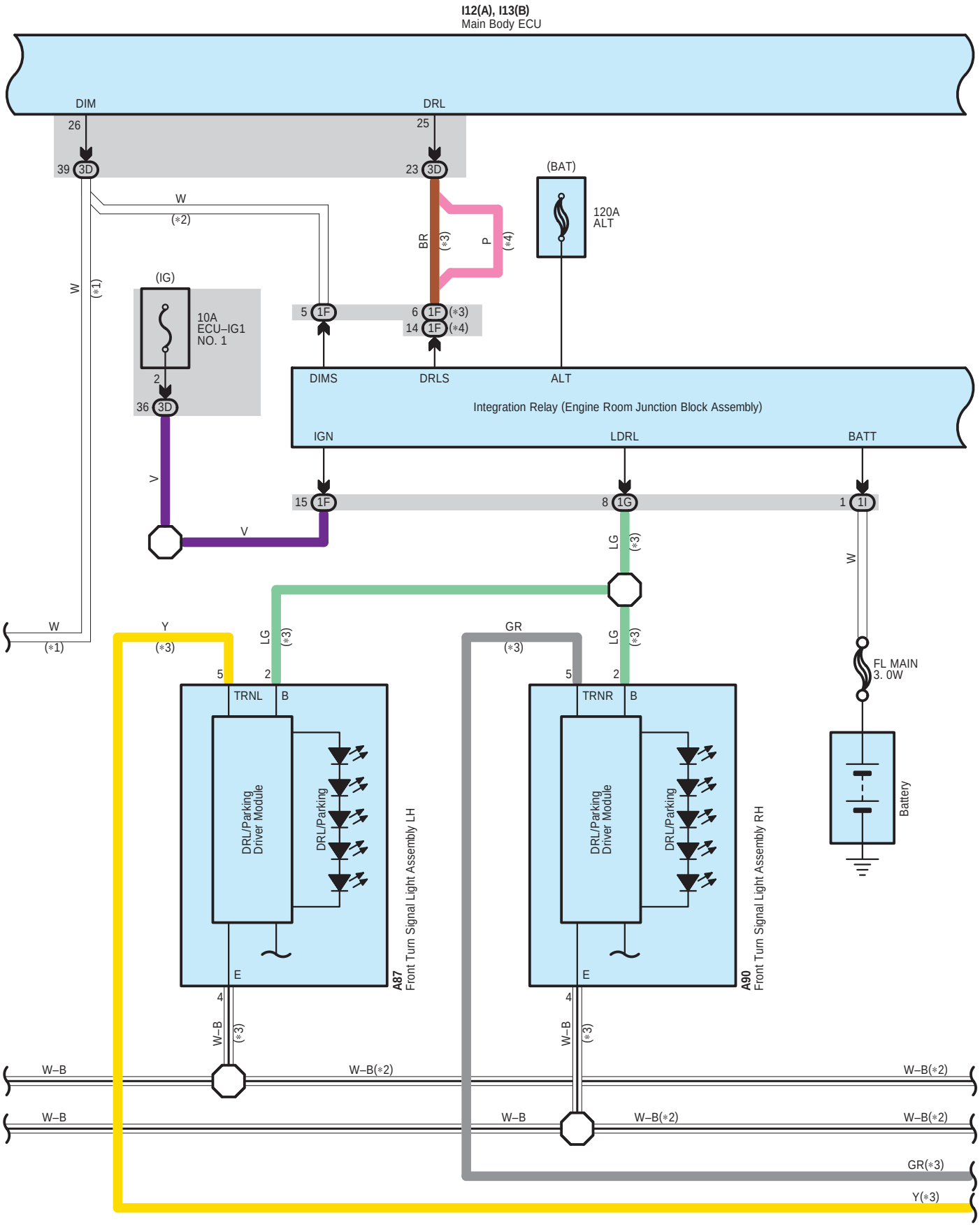
I12(A), I13(B)
Main Body ECU
DIM
DRL
26
25
39 3D
23 3D
(BAT)
120A
ALT
W
(*2)
BR
(*3)
P
(*4)
W
(*1)
(IG)
10A
ECU–IG1
NO. 1
5 1F
6 1F (*3)
14 1F (*4)
2
36 3D
DIMS
DRLS
ALT
Integration Relay (Engine Room Junction Block Assembly)
IGN
LDRL
BATT
V
15 1F
8 1G
1 1I
V
LG
(*3)
W
W
(*1)
Y
(*3)
LG
(*3)
GR
(*3)
LG
(*3)
5
2
TRNL
B
5
2
TRNR
B
FL MAIN
3. 0W
DRL/Parking
Driver Module
DRL/Parking
DRL/Parking
Driver Module
DRL/Parking
Battery
E
A87
Front Turn Signal Light Assembly LH
E
A90
Front Turn Signal Light Assembly RH
4
W–B
(*3)
4
W–B
(*3)
W–B
W–B(*2)
W–B(*2)
W–B
W–B
W–B(*2)
W–B(*2)
GR(*3)
Y(*3)

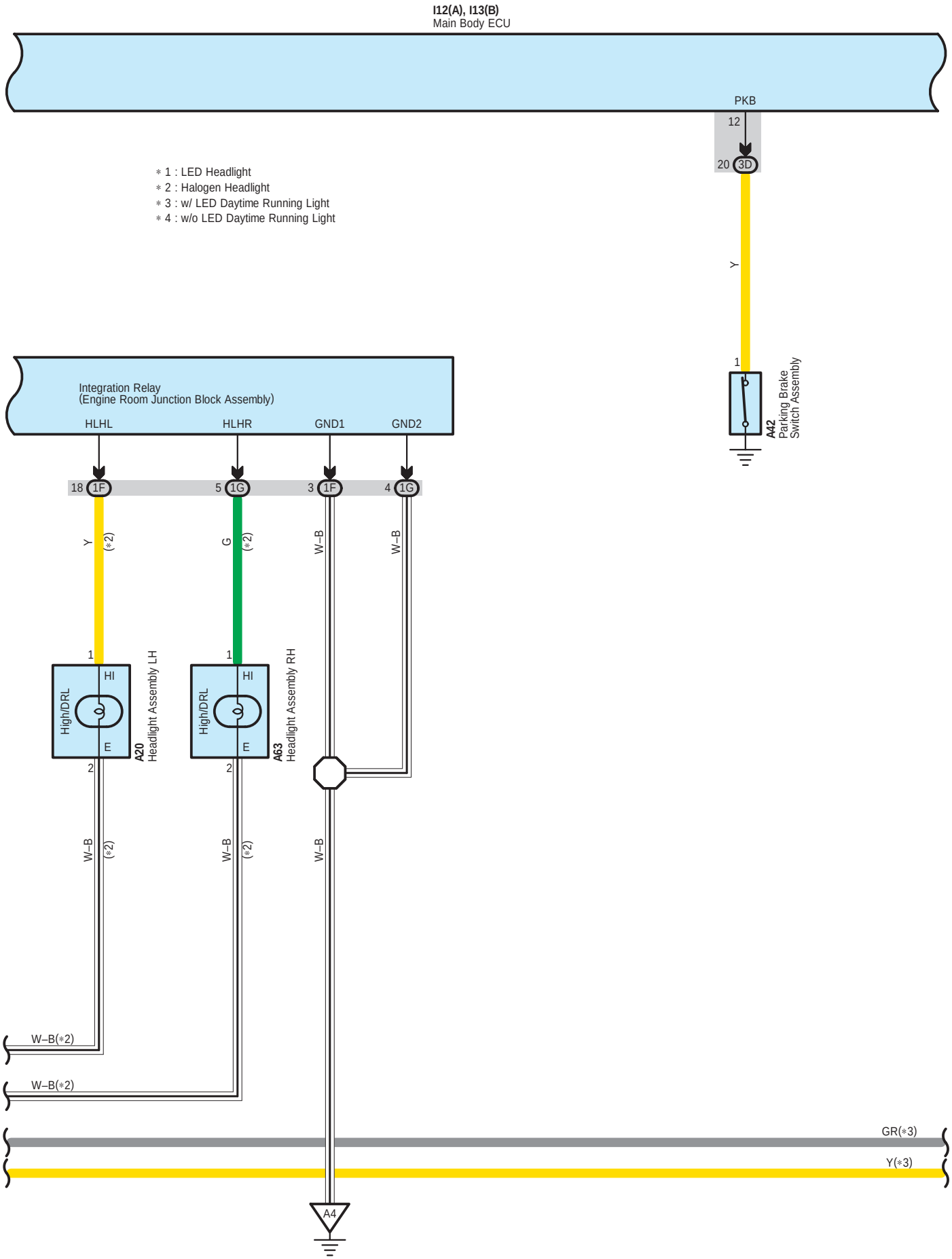
I12(A), I13(B)
Main Body ECU
PKB
12
20 3D
∗ 1 : LED Headlight
∗ 2 : Halogen Headlight
∗ 3 : w/ LED Daytime Running Light
∗ 4 : w/o LED Daytime Running Light
Y
1
A42
Parking Brake
Switch Assembly
Integration Relay
(Engine Room Junction Block Assembly)
HLHL
HLHR
GND1
GND2
18 1F
5 1G
3 1F
4 1G
Y
(∗2)
G
(∗2)
W–B
W–B
1
HI
High/DRL
E
2
A20
Headlight Assembly LH
1
HI
High/DRL
E
2
A63
Headlight Assembly RH
W–B
(∗2)
W–B
(∗2)
W–B
W–B(∗2)
W–B(∗2)
GR(∗3)
Y(∗3)
A4

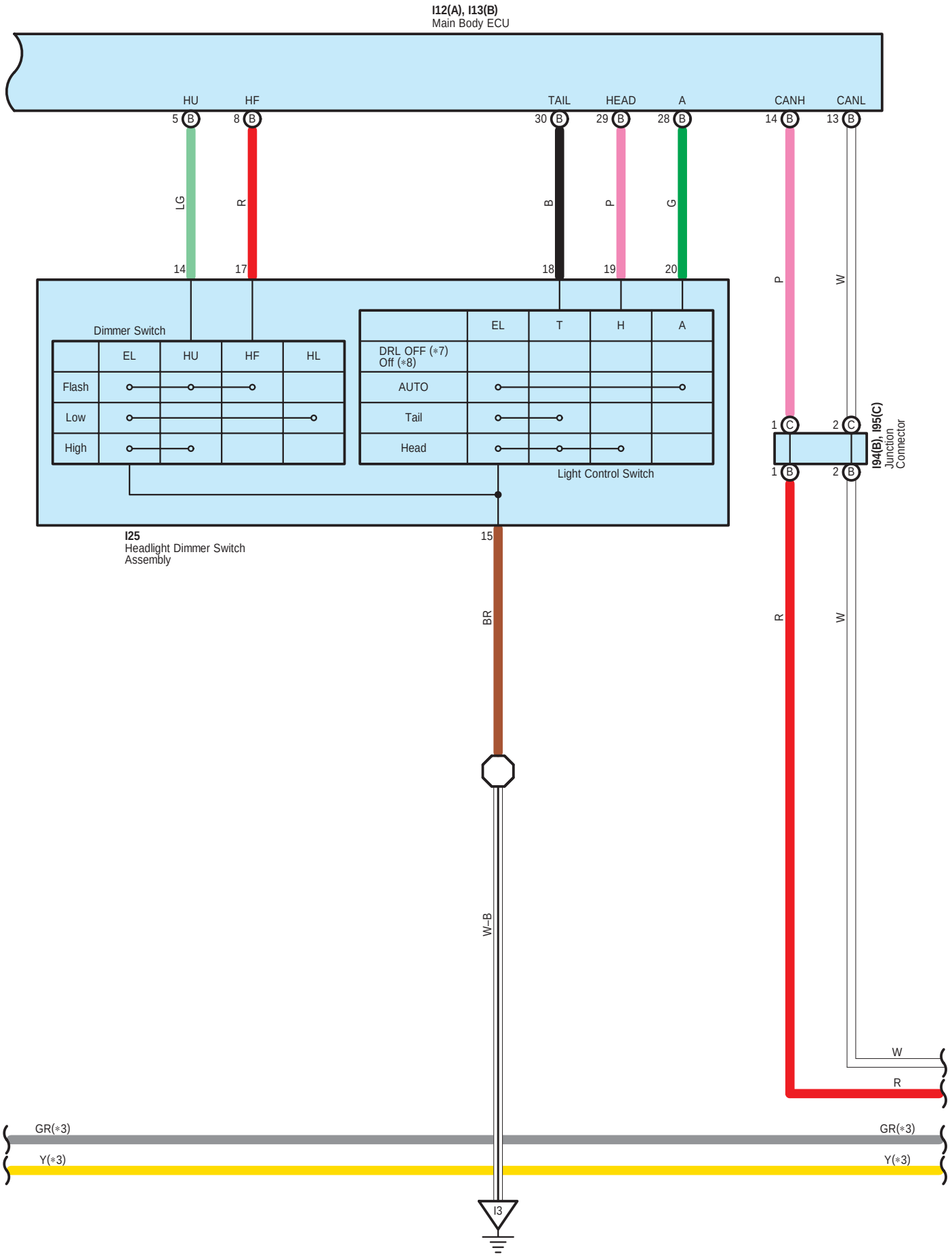
I12(A), I13(B)
Main Body ECU
HU
HF
TAIL
HEAD
A
CANH
CANL
5 B
8 B
30 B
29 B
28 B
14 B
13 B
LG
R
B
P
G
P
W
14
17
18
19
20
Dimmer Switch
EL
HU
HF
HL
Flash
Low
High
EL
T
H
A
DRL OFF (*7)
Off (*8)
AUTO
Tail
Head
Light Control Switch
1 C
2 C
1 B
2 B
I94(B), I95(C)
Junction
Connector
I25
Headlight Dimmer Switch
Assembly
15
BR
R
W
W–B
W
R
GR(*3)
Y(*3)
GR(*3)
Y(*3)
I3

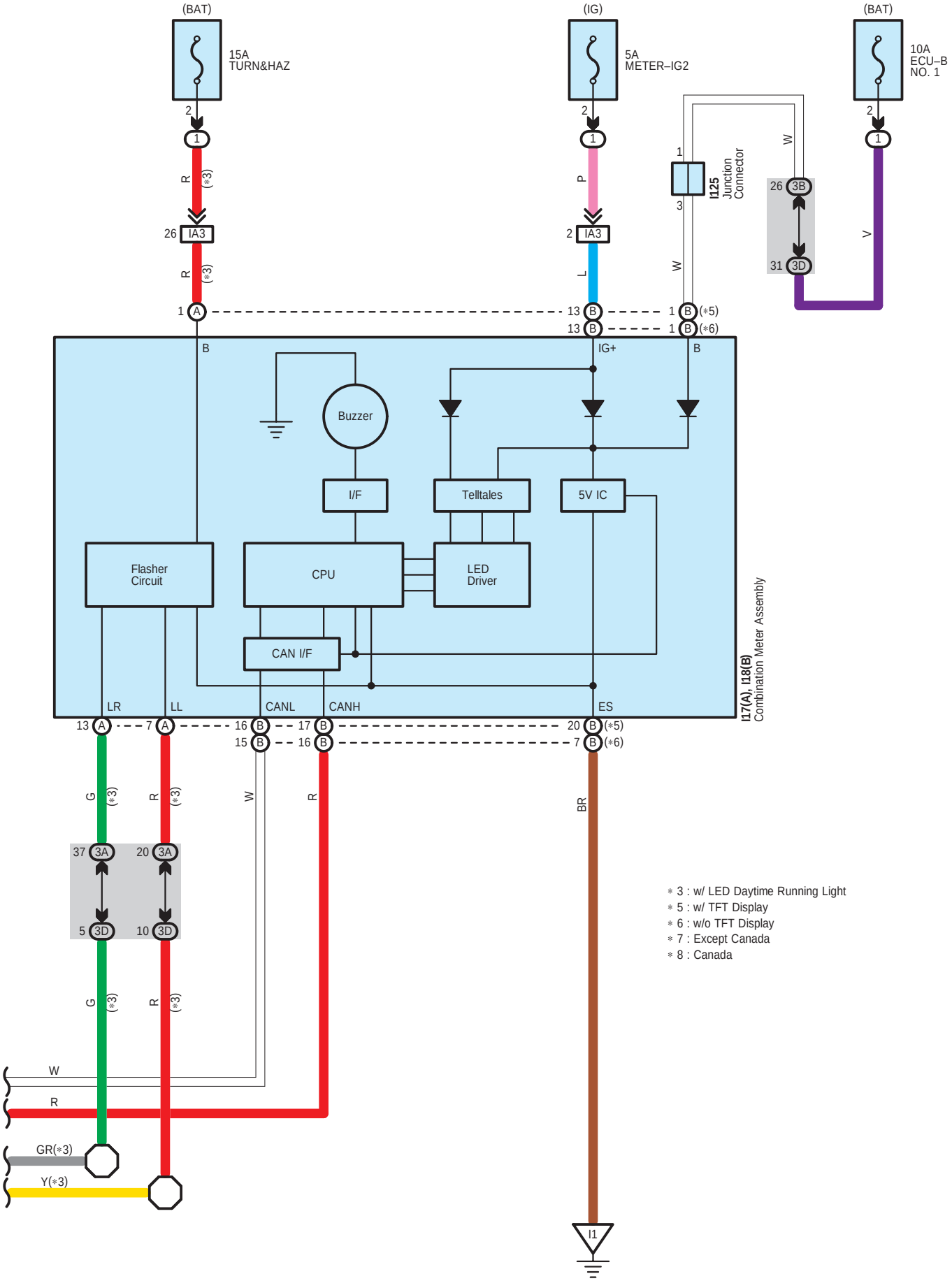
(BAT)
15A
TURN&HAZ
(IG)
5A
METER–IG2
(BAT)
10A
ECU–B
NO. 1
I125
Junction
Connector
IA3
3A
3B
3D
I17(A), I18(B)
Combination Meter Assembly
Buzzer
I/F
Telltales
5V IC
Flasher
Circuit
CPU
LED
Driver
CAN I/F
B
IG+
LR
LL
CANL
CANH
ES
GR(∗3)
Y(∗3)
I1
∗ 3 : w/ LED Daytime Running Light
∗ 5 : w/ TFT Display
∗ 6 : w/o TFT Display
∗ 7 : Except Canada
∗ 8 : Canada

A 17
Black

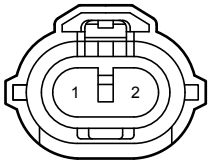

(Low Halogen Type)

A 20
Black

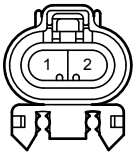

(High and DRL Halogen Type)

A 42
Black

A 60
Black

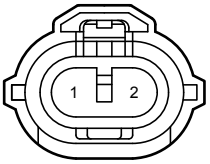

(Low Halogen Type)

A 63
Black

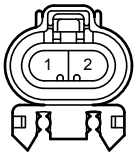

(High and DRL Halogen Type)

A 73
Gray

A 86
Black

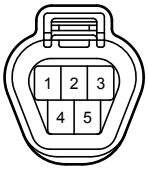

(High and Low LED Type)

A 87
Black

A 89
Black

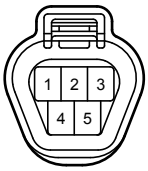

(High and Low LED Type)

A 90
Black

I 12
White

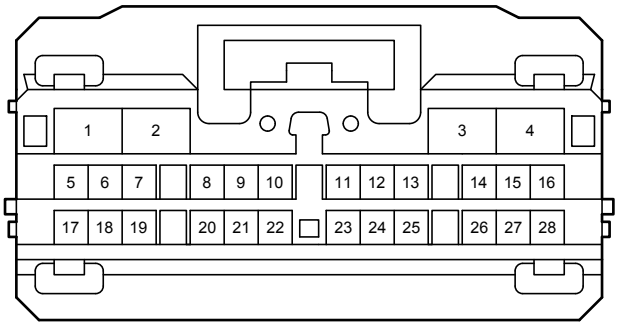

I 13
White

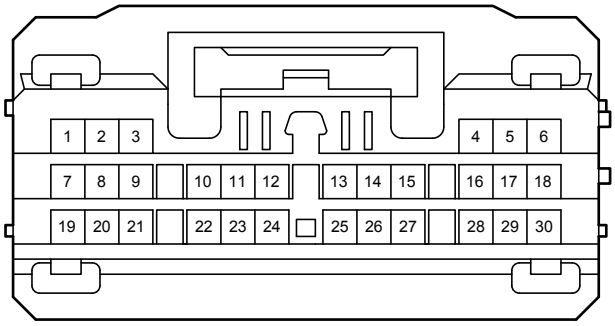

I 17
Black

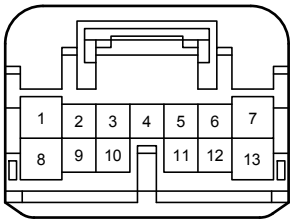

I 18
Black

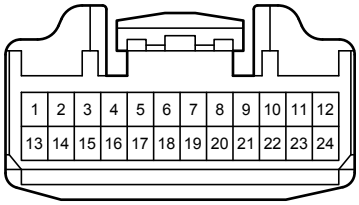

I 25
Black

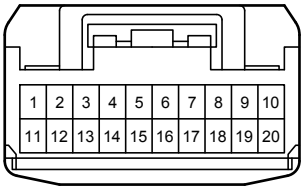

I 94
White

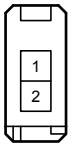

I 95
White

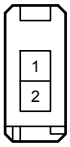

I125
Gray

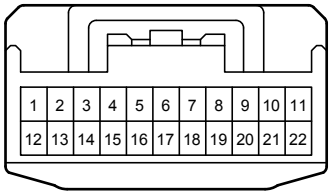

1F
White

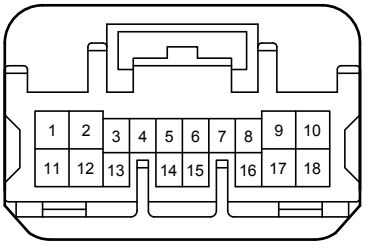

1G
White

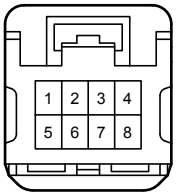

1I
White

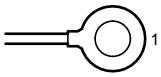

3A
White

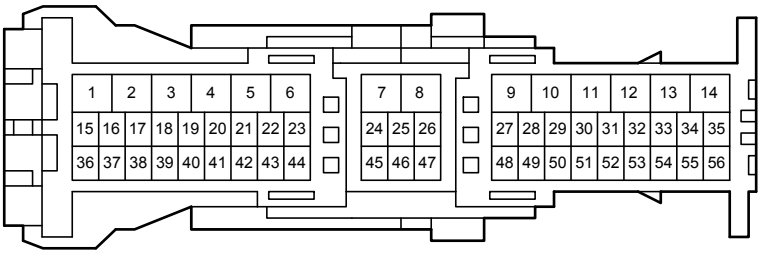

3B
White

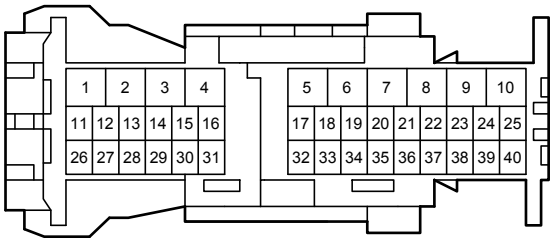

3D
White

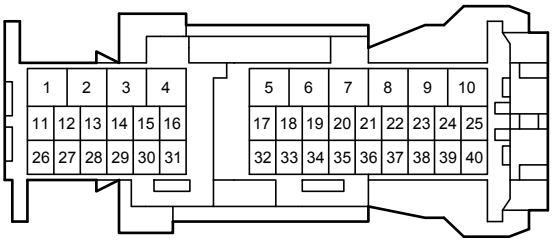

IA3
Blue

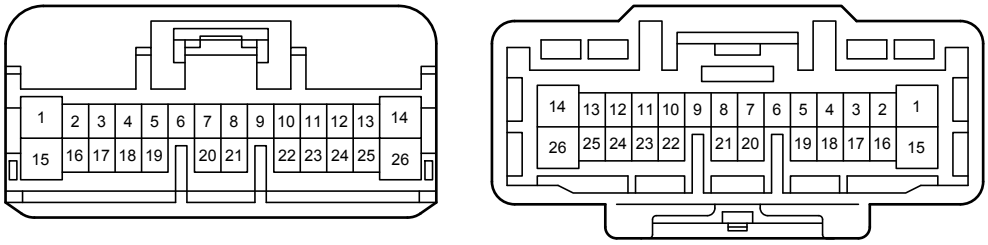
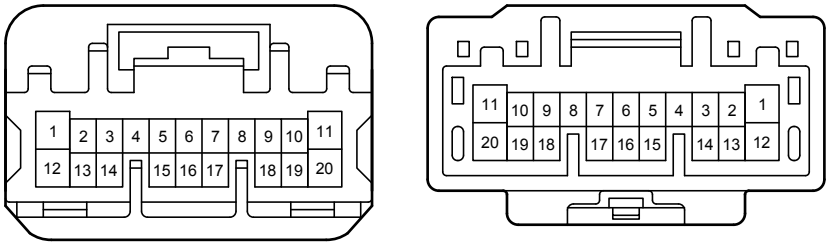
IA4
Gray