(Cont. next page)

Power Window (RHD)

* 1 : w/ Seat Position Memory
* 2 : w/o Seat Position Memory

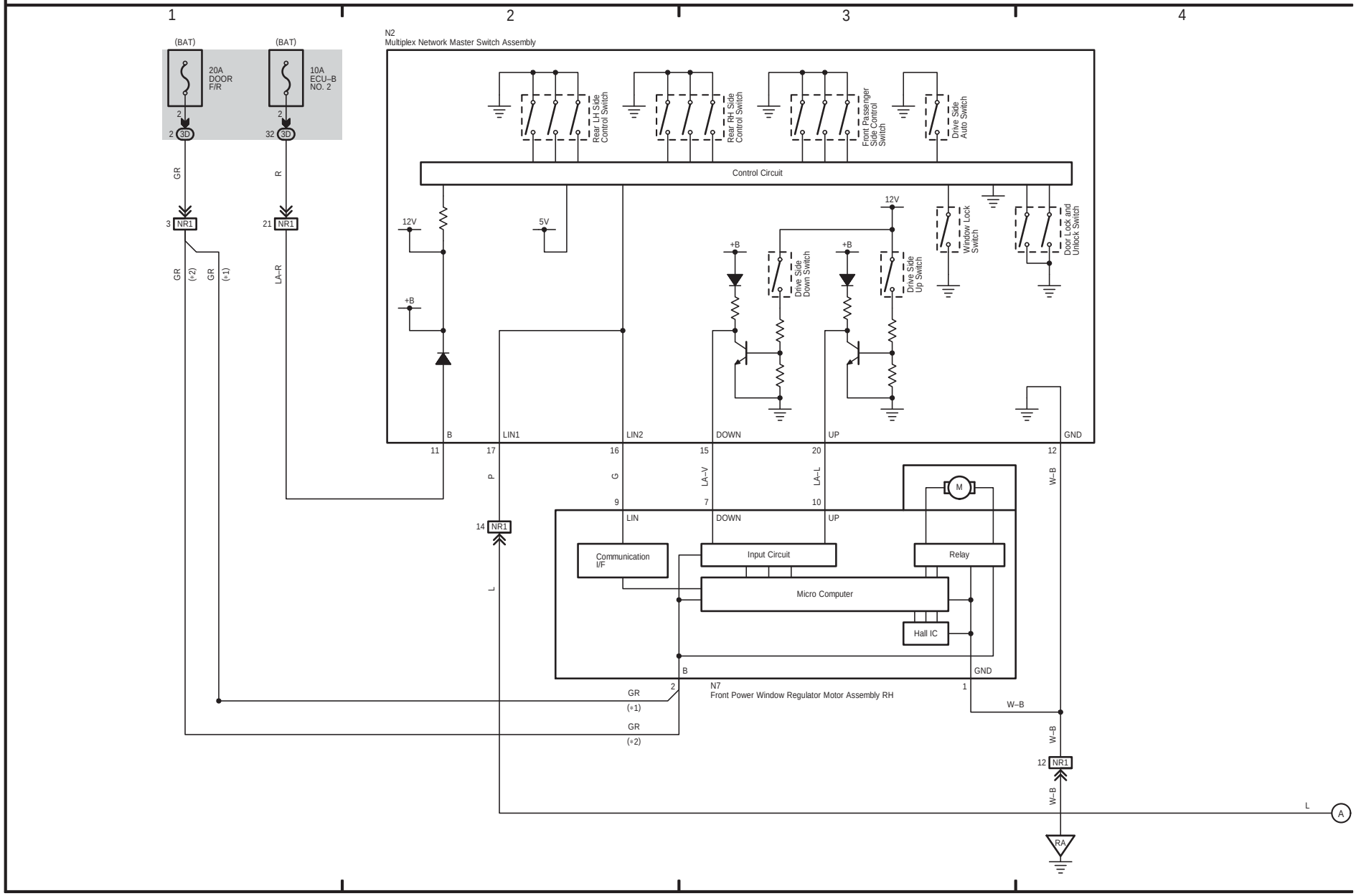

(Cont. next page)

Power Window (RHD)

* 1 : w/ Seat Position Memory
* 2 : w/o Seat Position Memory

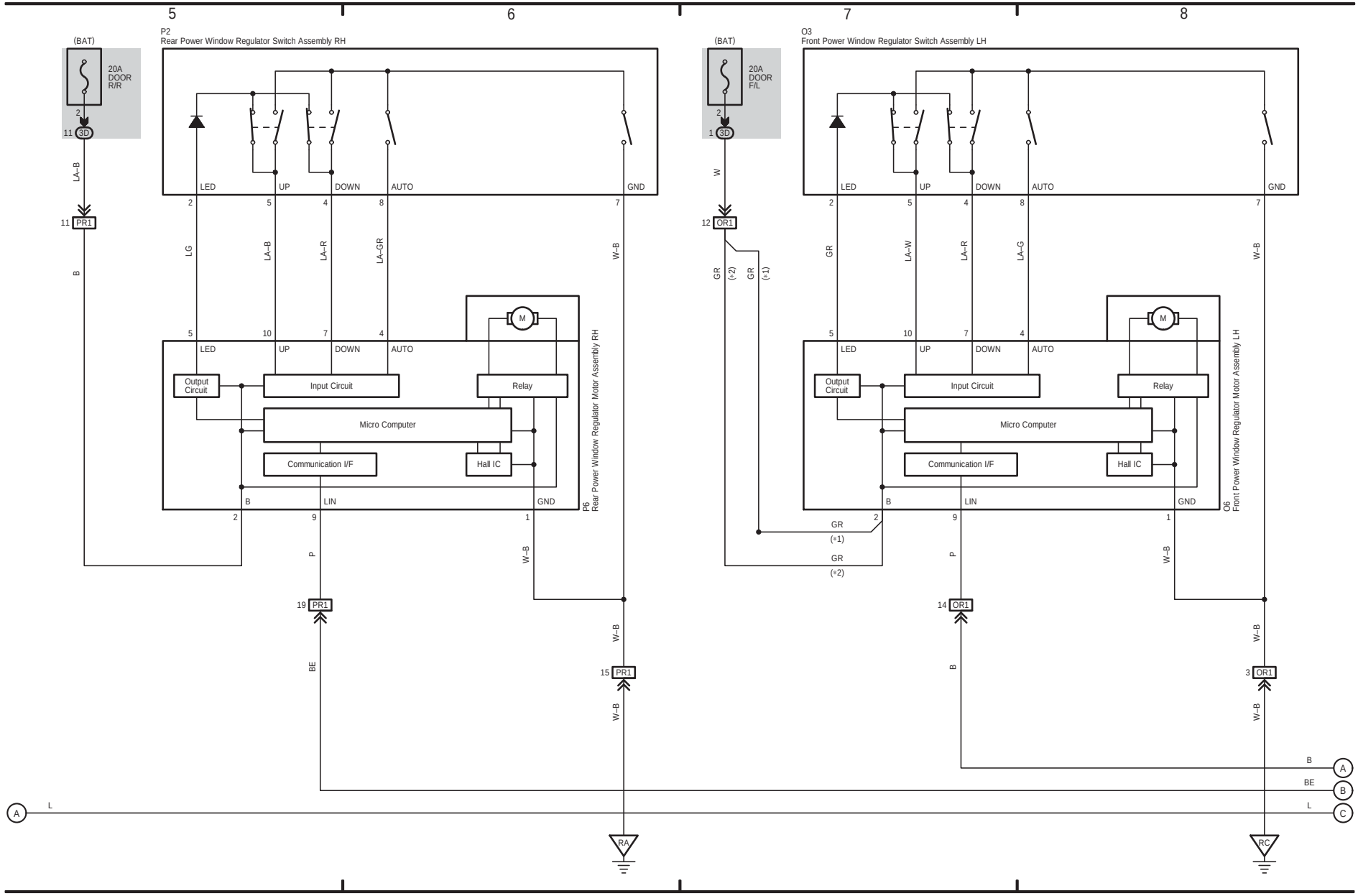

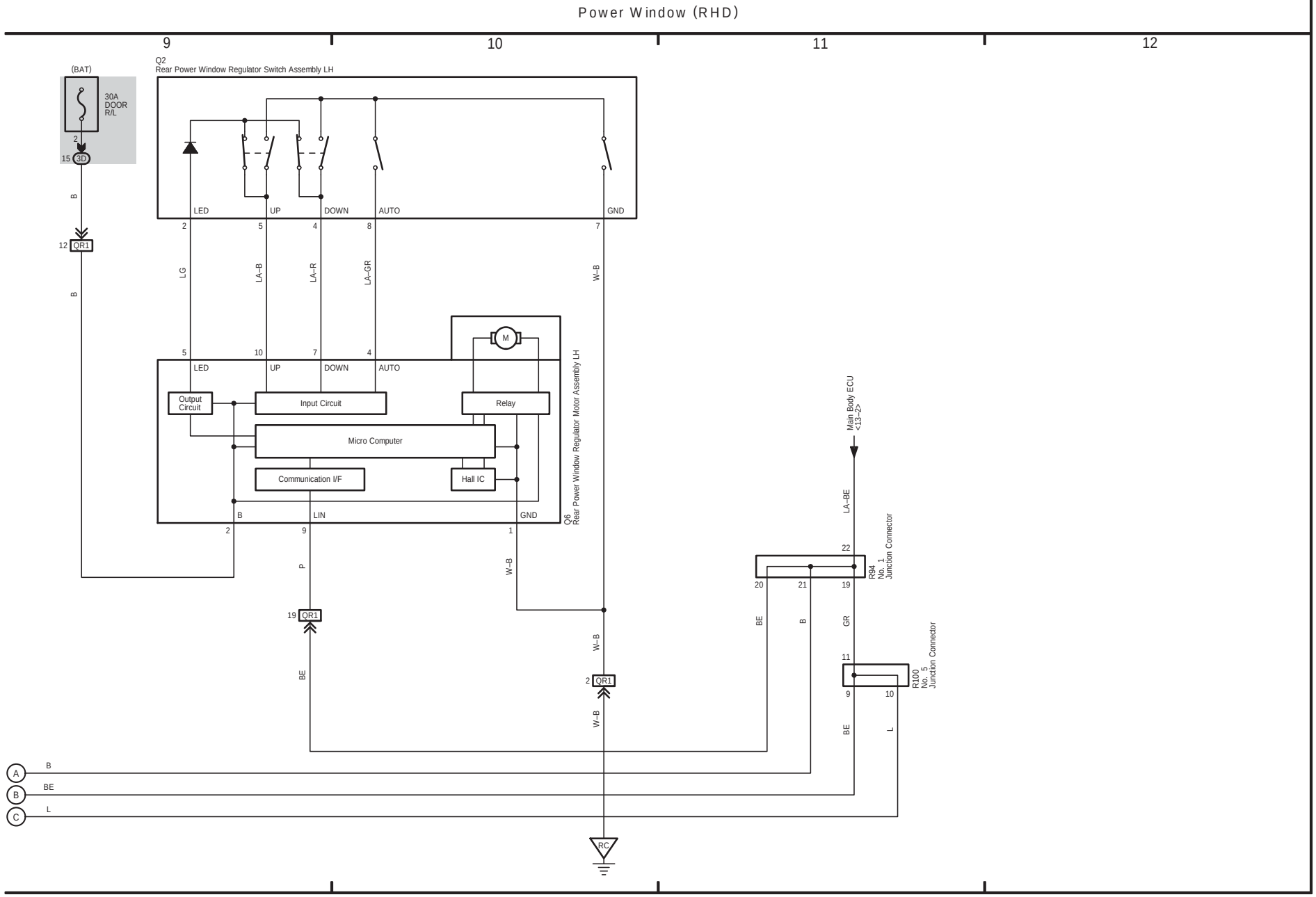
Power Window (RHD)
9
10
11
12
(BAT)
30A
DOOR
R/L
2
15 3D
B
12 QR1
B
Q2
Rear Power Window Regulator Switch Assembly LH
LED
UP
DOWN
AUTO
GND
2
5
4
8
7
LG
LA–B
LA–R
LA–GR
W–B
M
5
10
7
4
LED
UP
DOWN
AUTO
Output Circuit
Input Circuit
Relay
Micro Computer
Communication I/F
Hall IC
B
LIN
GND
2
9
1
Q6
Rear Power Window Regulator Motor Assembly LH
P
W–B
19 QR1
BE
W–B
2 QR1
W–B
Main Body ECU
<13–2>
LA–BE
22
20
21
19
R94
No. 1
Junction Connector
BE
B
GR
11
9
10
R100
No. 5
Junction Connector
BE
L
A
B
C
B
BE
L
RC