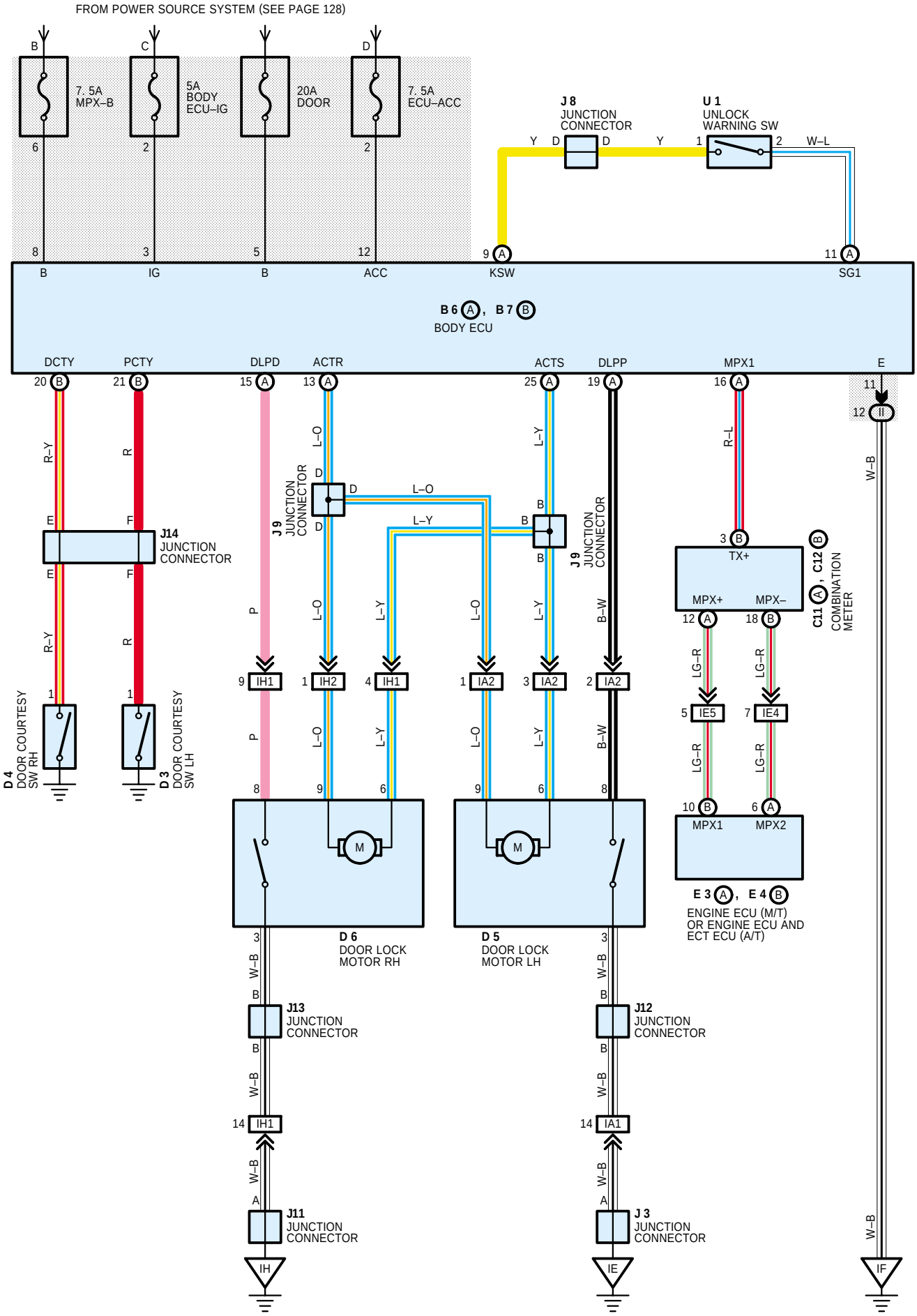DOUBLE LOCKING