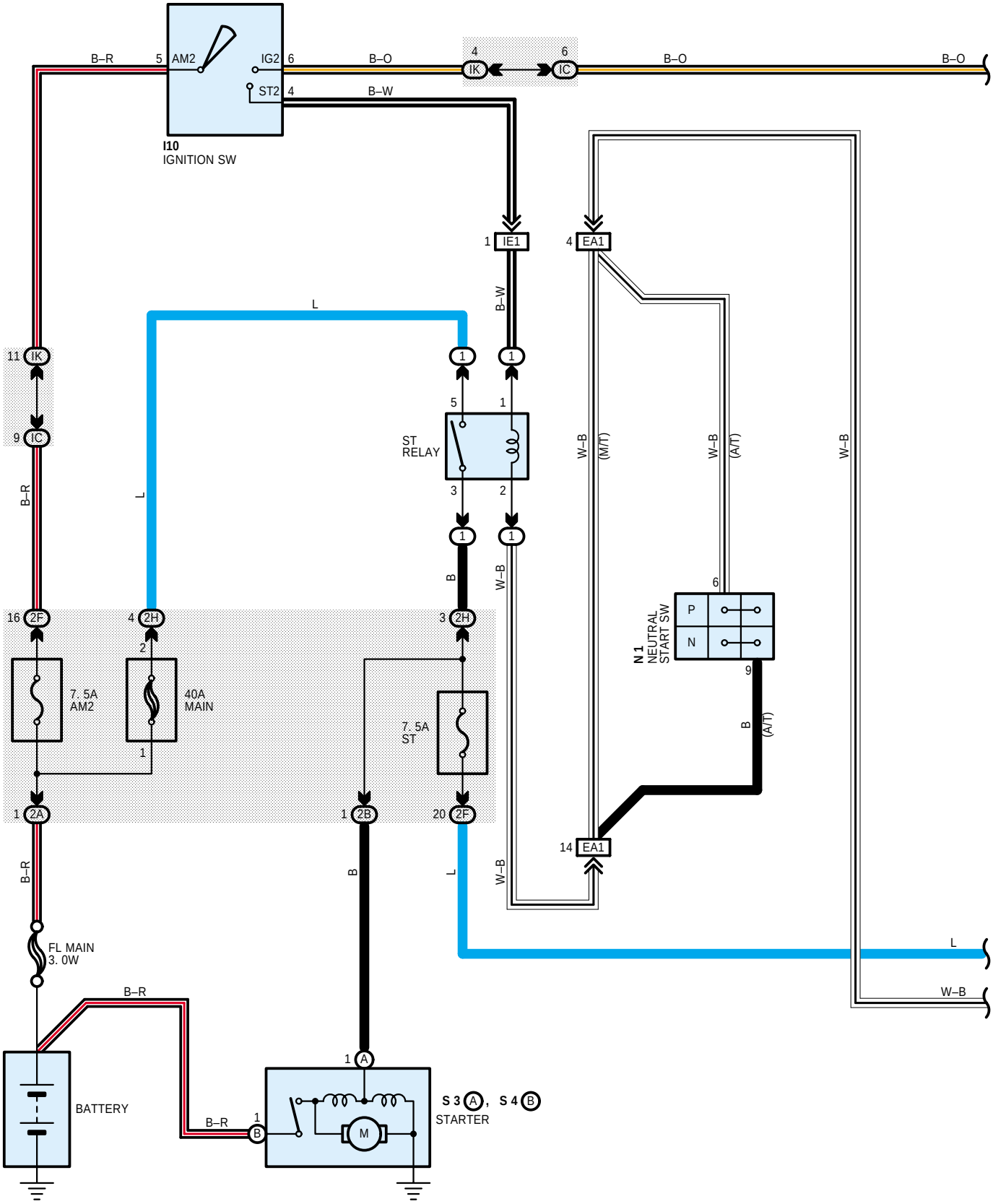
I10
IGNITION SW
AM2
IG2
ST2
B–R
B–O
B–W
IK
IC
IE1
EA1
ST
RELAY
W–B
(M/T)
(A/T)
L
B
N 1
NEUTRAL
START SW
P
N
7. 5A
AM2
40A
MAIN
7. 5A
ST
2F
2H
2A
2B
FL MAIN
3. 0W
BATTERY
S 3 A, S 4 B
STARTER
M

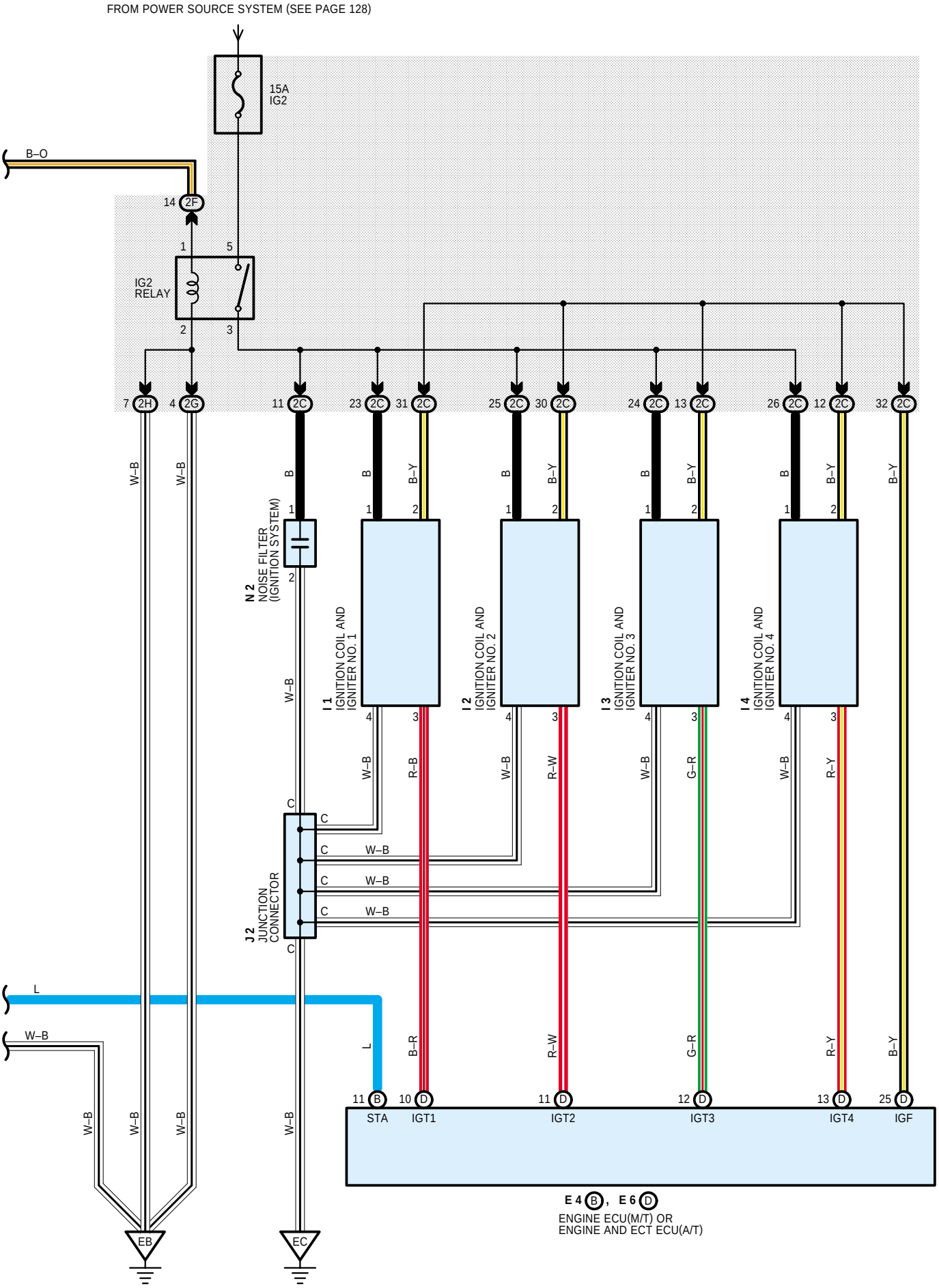
FROM POWER SOURCE SYSTEM (SEE PAGE 128)
15A
IG2
B–O
14 2F
1
5
IG2
RELAY
2
3
7 2H
4 2G
11 2C
23 2C
31 2C
25 2C
30 2C
24 2C
13 2C
26 2C
12 2C
32 2C
W–B
B
B–Y
N 2
NOISE FILTER
(IGNITION SYSTEM)
I 1
IGNITION COIL AND
IGNITER NO. 1
I 2
IGNITION COIL AND
IGNITER NO. 2
I 3
IGNITION COIL AND
IGNITER NO. 3
I 4
IGNITION COIL AND
IGNITER NO. 4
R–B
R–W
G–R
R–Y
J 2
JUNCTION
CONNECTOR
L
11 B STA
10 D IGT1
11 D IGT2
12 D IGT3
13 D IGT4
25 D IGF
E 4 B , E 6 D
ENGINE ECU(M/T) OR
ENGINE AND ECT ECU(A/T)
EB
EC