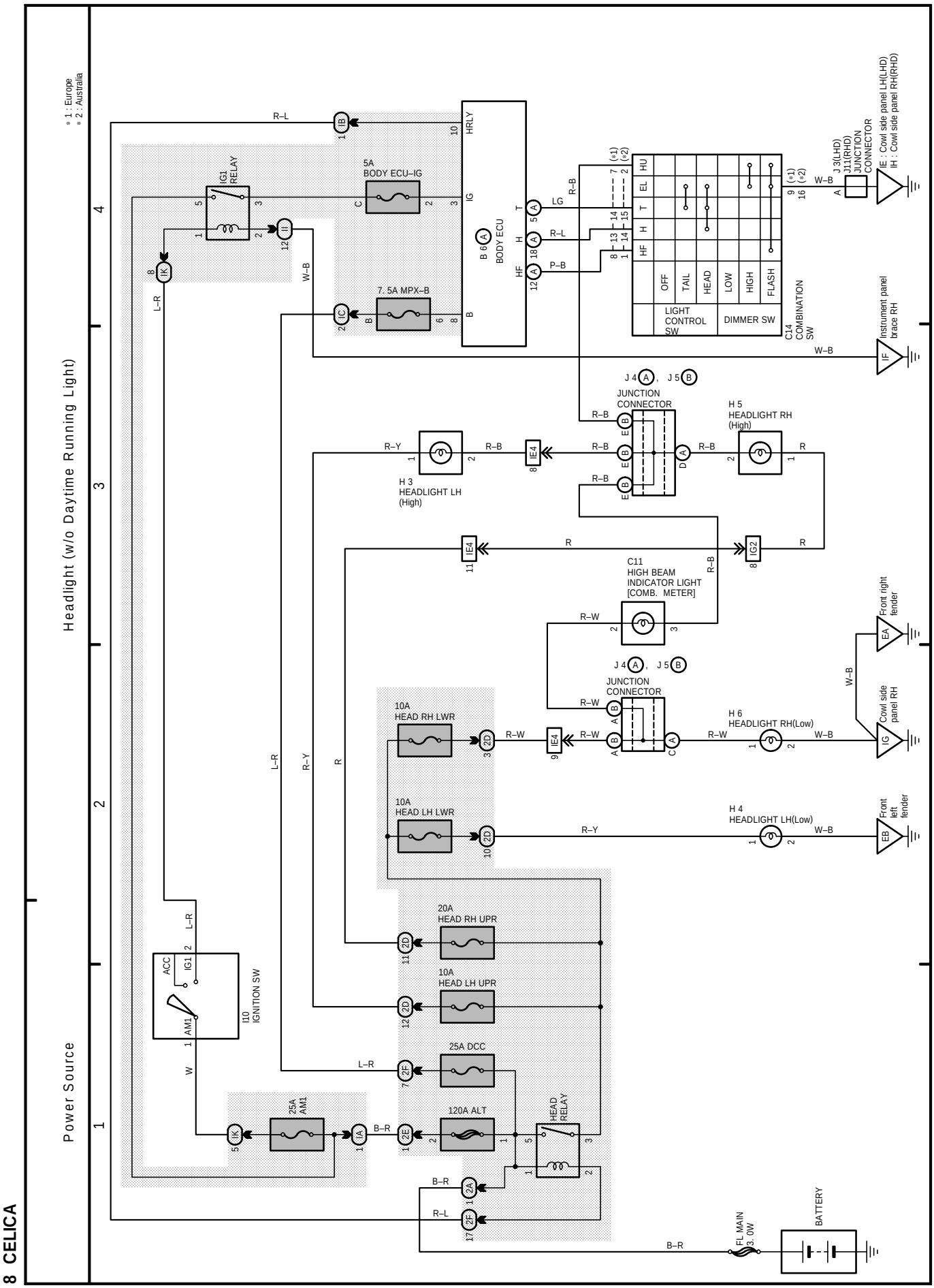
8 CELICA
Power Source
Headlight (w/o Daytime Running Light)
* 1 : Europe
* 2 : Australia
IG1 RELAY
5A BODY ECU–IG
7. 5A MPX–B
B 6 BODY ECU
HRLY
IG
T
H
HF
B
LIGHT CONTROL SW
DIMMER SW
OFF
TAIL
HEAD
LOW
HIGH
FLASH
C14 COMBINATION SW
J 3(LHD) J11(RHD) JUNCTION CONNECTOR
IE : Cowl side panel LH(LHD)
IH : Cowl side panel RH(RHD)
Instrument panel brace RH
IF
J 4 A , J 5 B
JUNCTION CONNECTOR
H 5 HEADLIGHT RH (High)
H 3 HEADLIGHT LH (High)
IE4
IG2
C11 HIGH BEAM INDICATOR LIGHT [COMB. METER]
Front right fender
EA
Cowl side panel RH
IG
H 6 HEADLIGHT RH(Low)
10A HEAD RH LWR
10A HEAD LH LWR
H 4 HEADLIGHT LH(Low)
Front left fender
EB
20A HEAD RH UPR
10A HEAD LH UPR
25A DCC
120A ALT
HEAD RELAY
25A AM1
I10 IGNITION SW
ACC
IG1
AM1
FL MAIN 3. 0W
BATTERY
R–L
W–B
L–R
R–Y
R
R–B
LG
P–B
R–W
B–R