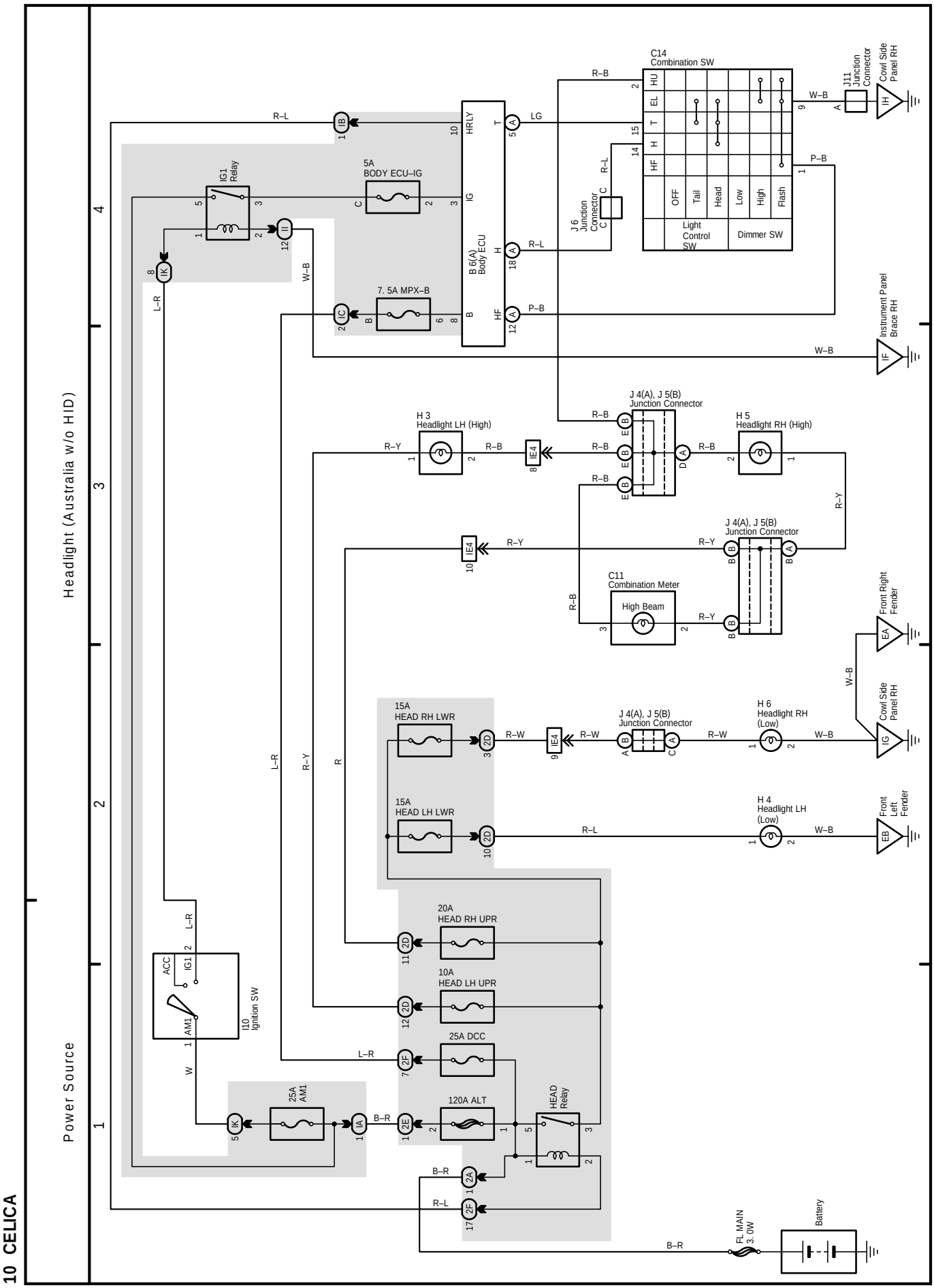
10 CELICA
Power Source
Headlight (Australia w/o HID)
C14
Combination SW
HU
EL
T
H
HF
OFF
Tail
Head
Low
High
Flash
Light Control SW
Dimmer SW
J11 Junction Connector
Cowl Side Panel RH
J 6 Junction Connector
B 6(A) Body ECU
HRLY
IG
HF
5A BODY ECU–IG
7. 5A MPX–B
IG1 Relay
Instrument Panel Brace RH
J 4(A), J 5(B) Junction Connector
H 3 Headlight LH (High)
H 5 Headlight RH (High)
C11 Combination Meter
High Beam
Front Right Fender
15A HEAD RH LWR
15A HEAD LH LWR
H 6 Headlight RH (Low)
H 4 Headlight LH (Low)
Front Left Fender
20A HEAD RH UPR
10A HEAD LH UPR
25A DCC
120A ALT
HEAD Relay
25A AM1
I10 Ignition SW
ACC
IG1
AM1
FL MAIN 3. 0W
Battery