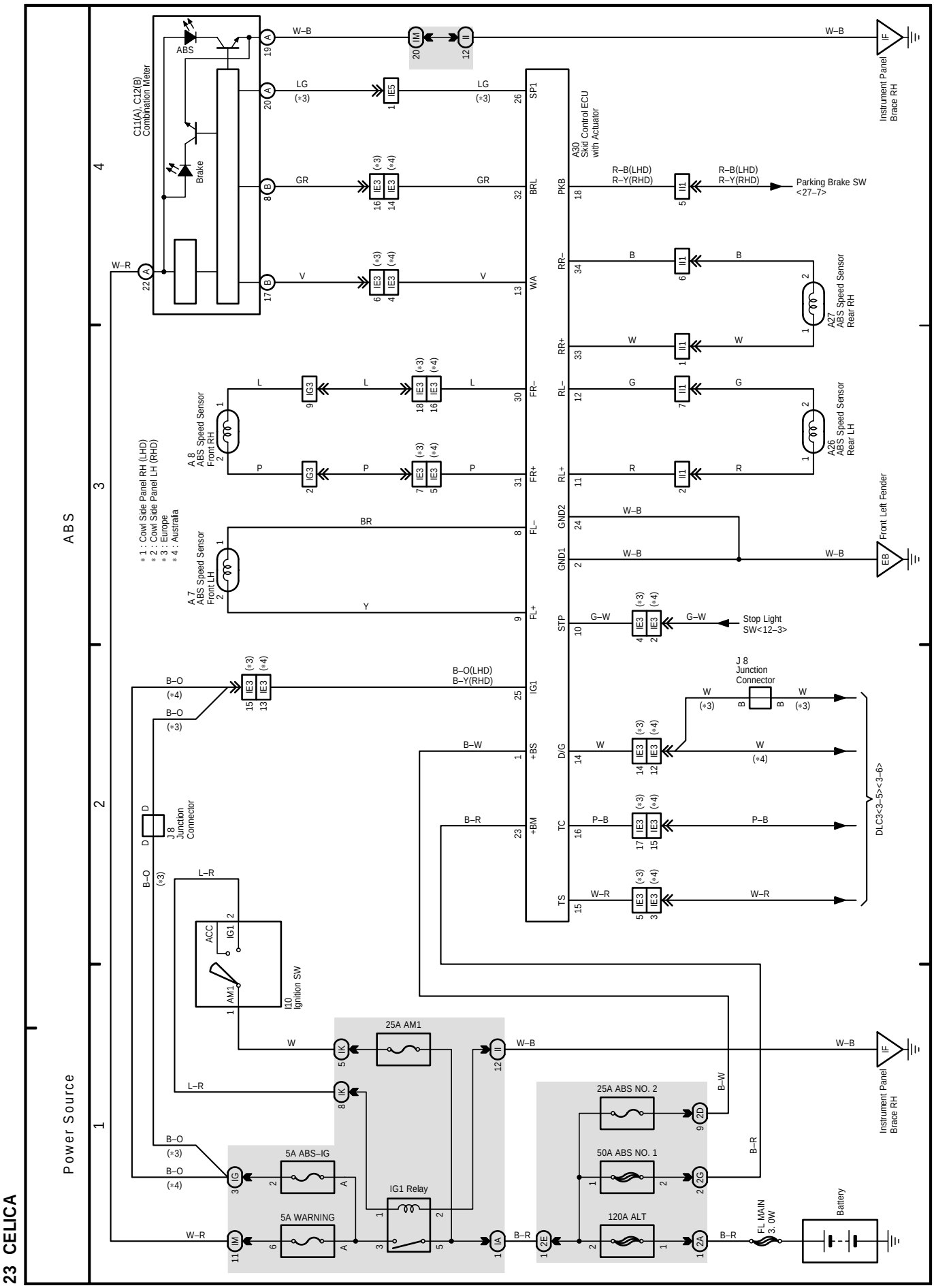
23 CELICA
ABS
Power Source
C11(A), C12(B) Combination Meter
ABS
Brake
A30 Skid Control ECU with Actuator
Instrument Panel Brace RH
Parking Brake SW <27–7>
A27 ABS Speed Sensor Rear RH
A26 ABS Speed Sensor Rear LH
A 8 ABS Speed Sensor Front RH
A 7 ABS Speed Sensor Front LH
Front Left Fender
Stop Light SW<12–3>
J 8 Junction Connector
DLC3<3–5><3–6>
I10 Ignition SW
25A AM1
25A ABS NO. 2
50A ABS NO. 1
120A ALT
5A ABS–IG
5A WARNING
IG1 Relay
FL MAIN 3. 0W
Battery
* 1 : Cowl Side Panel RH (LHD)
* 2 : Cowl Side Panel LH (RHD)
* 3 : Europe
* 4 : Australia