DI2S4–06

DTC	P0115/22	Water Temp. Circuit Malfunction

CIRCUIT DESCRIPTION

A thermistor built into the water temp. sensor changes the resistance value according to the water temperature.

The structure of the sensor and connection to the engine ECU is the same as in the DTC P0110/24 (Intake Air Temp. Circuit Malfunction) shown on page DI–33.

DTC No.	DTC Detecting Condition	Trouble Area
P0115/22	Open or short in water temp. sensor circuit	• Open or short in water temp. sensor circuit • Water temp. sensor • Engine ECU

HINT:

After confirming DTC P0115/22 use the hand–held tester to confirm the water temperature from CURRENT DATA.

Temperature Displayed	Malfunction
–40°C (–40°F)	Open circuit
140C° (284°F) or more	Short circuit

WIRING DIAGRAM

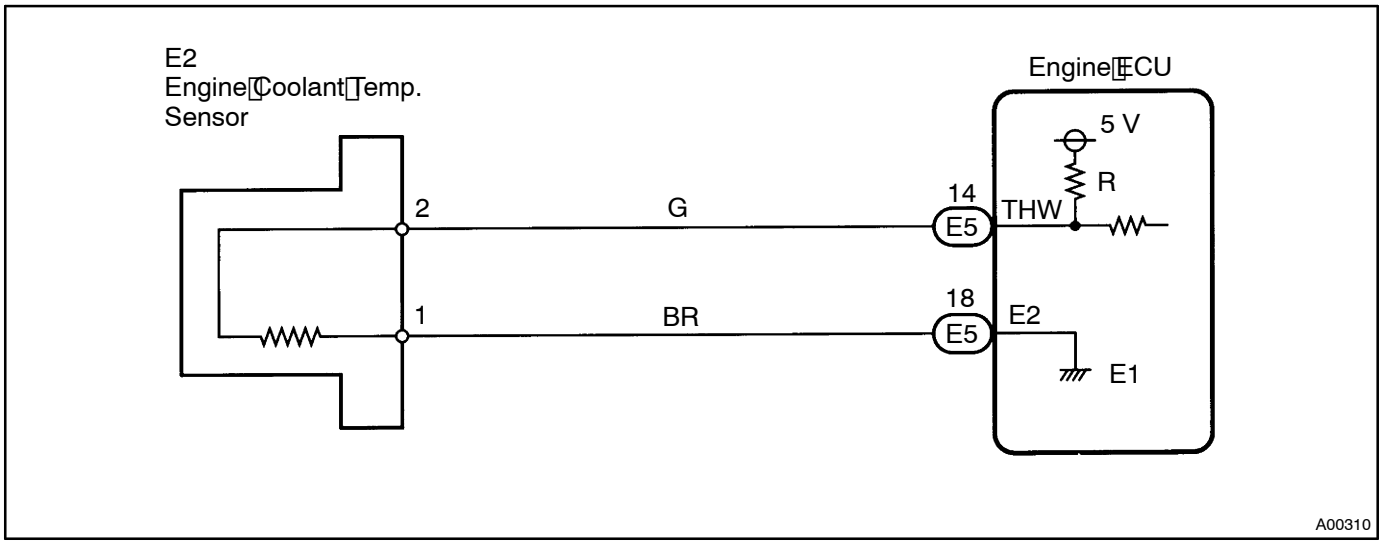

INSPECTION PROCEDURE

HINT:

- If DTC P0100/31 (Air Flow Meter Circuit Malfunction), P0101/31 (Air Flow Meter Circuit Range/Performance Problem), P0110/24 (Intake Air Temp. Circuit Malfunction), P0115/22 (Engine Coolant Temp. Circuit Malfunction), P0120/41 (Throttle/Pedal Position Sensor/Switch "A" Circuit Malfunction) are output simultaneously, E2 (sensor ground) may be open.
- Read freeze frame data using hand–held tester. Because freeze frame records the engine conditions when the malfunction is detected, when troubleshooting it is useful for determining whether the vehicle was running or stopped, the engine warmed up or not, the air–fuel ratio lean or rich, etc. at the time of the malfunction.

When using hand–held tester

1	**Connect hand–held tester, and read value of water temperature.**

PREPARATION:

(a) Connect the hand–held tester to the DLC3.

(b) Turn the ignition switch ON and switch the hand–held tester main switch ON.

CHECK:

Read temperature value on the hand–held tester.

OK:

Same as actual water temperature

HINT:

- If there is open circuit, Hand–held tester indicates –40°C (–40°F).
- If there is short circuit, Hand–held tester indicates 140°C (284°F) or more.

NG

–40°C (–40°F)...Go to step 2.
140°C (284°F) or more...Go to step 4.

OK

Check for intermittent problems (See page DI–4).

2	**Check for open in harness or engine ECU.**

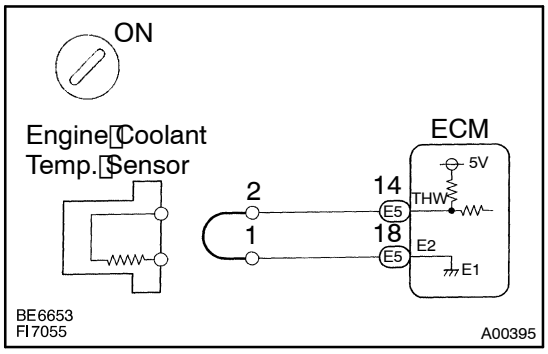

PREPARATION:

(a) Disconnect the water temp. sensor connector.

(b) Connect sensor wire harness terminals together.

(c) Turn the ignition switch ON.

CHECK:

Read temperature value on the hand–held tester.

OK:

Temperature value: 140°C (284°F) or more

OK	**Confirm good connection at sensor. If OK, replace water temp. sensor.**

NG

3	**Check for open in harness or engine ECU.**

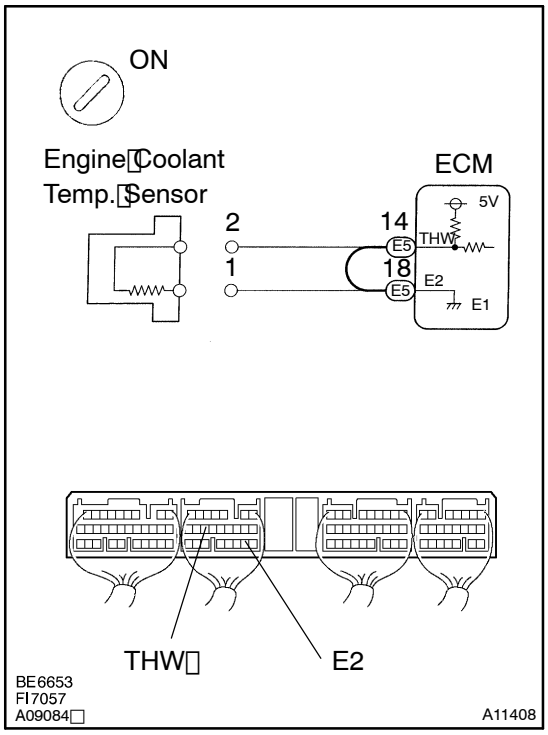

PREPARATION:

(a) Remove the engine ECU cover.

(b) Connect between terminals THW, and E2 of the engine ECU connector.

HINT:

Water temp. sensor connector is disconnected.

Before checking, do a visual and contact pressure check for the engine ECU connector (See page IN–20).

(c) Turn the ignition switch ON.

CHECK:

Read temperature value on the hand–held tester.

OK:

Temperature value: 140°C (284°F) or more

OK	**Open in harness between terminals E2 or THW, repair or replace harness.**

NG

Confirm good connection at engine ECU. If OK, check and replace engine ECU (See page IN–20).

4	Check for short in harness and engine ECU.

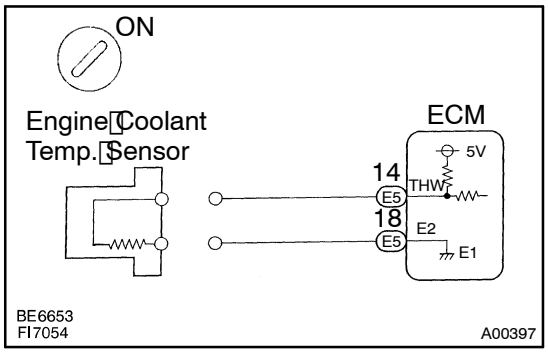

PREPARATION:

(a) Disconnect the water temp. sensor connector.

(b) Turn the ignition switch ON.

CHECK:

Read temperature value on the hand-held tester.

OK:

Temperature value: –40°C (–40°F)

OK	Replace water temp. sensor.

NG

5	Check for short in harness or engine ECU.

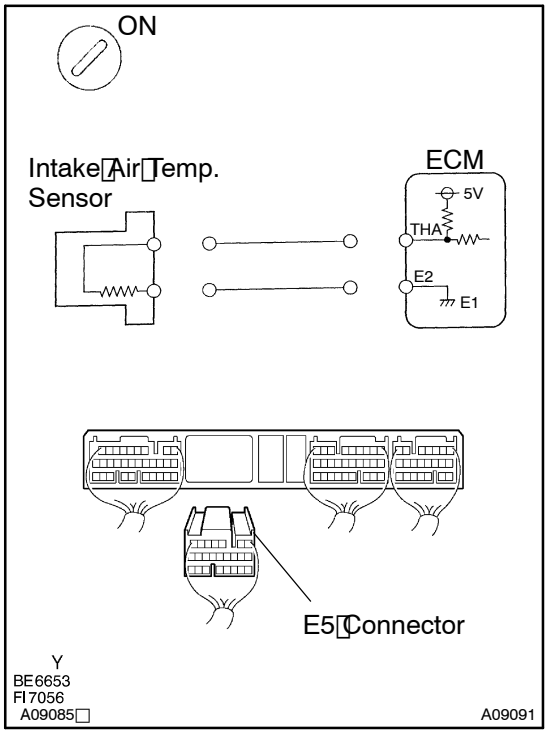

PREPARATION:

(a) Remove the engine ECU cover.

(b) Disconnect the E5 connector of the engine ECU.

HINT:

Water temp. sensor connector is disconnected.

(c) Turn the ignition switch ON.

CHECK:

Read temperature value on the hand-held tester.

OK:

Temperature value: –40°C (–40°F)

OK	Repair or replace harness or connector.

NG

Check and replace engine ECU (See page IN–20).

When not using hand-held tester

1	Check voltage between terminals THW and E2 of engine ECU connector.

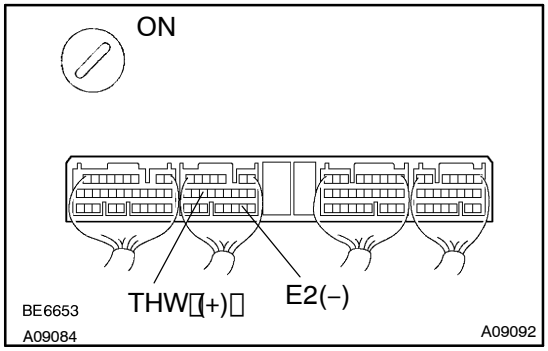

PREPARATION:

(a) Remove the cover from the engine ECU.

(b) Turn ignition switch ON.

CHECK:

Measure voltage between terminals THW and E2 of engine ECU connector.

OK:

Water temp. °C (°F)	Voltage
20 (68)	0.5 – 3.4 V
60 (140)	0.2 – 1.0 V

OK → **Check for intermittent problems (See page DI–24).**

NG

2	Check water temp. sensor.

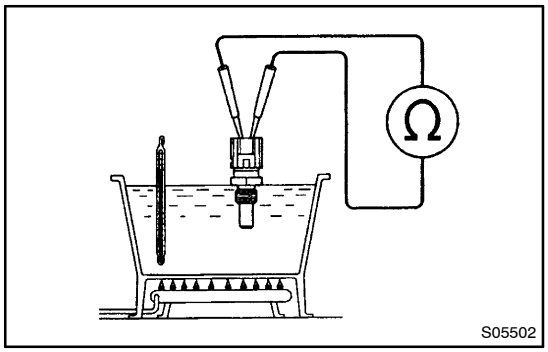

PREPARATION:

Disconnect the water temp. sensor connector.

CHECK:

Measure resistance between terminals.

OK:

Resistance is within acceptable zone on chart.

Water Temp.	Resistance
20°C (68°F)	2 – 3 kΩ
80°C (176°F)	0.2 – 0.4 kΩ

NG → **Replace water temp. sensor.**

OK

3	**Check for open and short in harness and connector between engine ECU and water temp. sensor (See page FI–55).**

NG → **Repair or replace harness or connector.**

OK

Check and replace engine ECU.