EM05X–04

REPLACEMENT

REPLACE VALVE GUIDE BUSHINGS

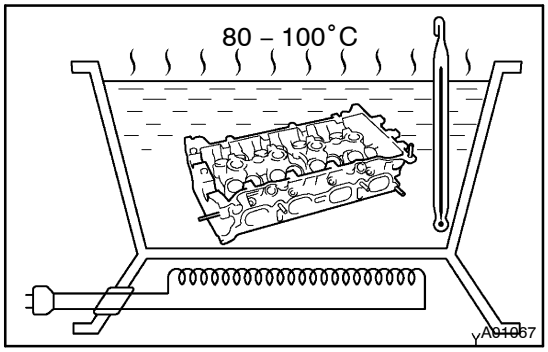

(a) Gradually heat the cylinder head to 110 – 130 ˚C (230 – 266 ˚F).

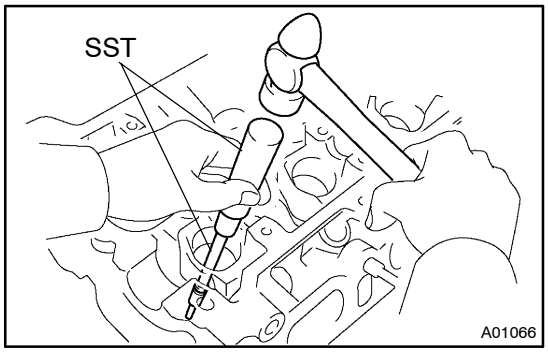

(b) Using SST and a hammer, tap out the guide bushing.
SST 09201–01055, 09950–70010 (09951–07100)

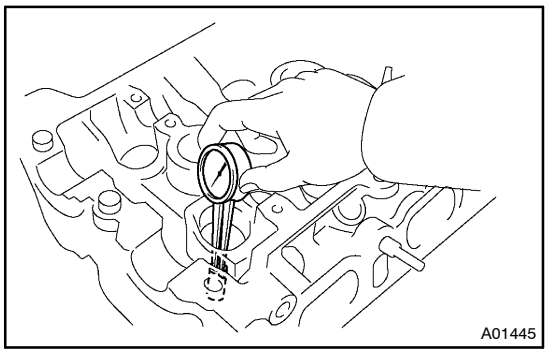

(c) Using a caliper gauge, measure the bushing bore diameter of the cylinder head.

Both intake and exhaust

Bushing bore diameter mm (in.)	Bushing size
10.285 – 10.306 (0.4049 – 0.4057)	Use STD
10.335 – 10.356 (0.4068 – 0.4077)	Use O/S 0.05

(d) 1ZZ–FE:
Select the new guide bushing (STD or O/S 0.05).

If the bushing bore diameter of the cylinder head is greater than 10.306 mm (0.4057 in.), machine the bushing bore to the following dimension:

10.335 – 10.356 mm (0.4068 – 0.4077 in.)

If the bushing bore diameter of the cylinder head is greater than 10.356 mm (0.4077 in.), replace the cylinder head.

(e) 1ZZ–FE:
Gradually heat the cylinder head to 80 – 100 ˚C (176 – 212 ˚F).

Both intake and exhaust

Bushing bore diameter mm (in.)	Bushing size
10.488 – 10.506 (0.4129 – 0.4136)	Use STD
10.538 – 10.556 (0.4149 – 0.4156)	Use O/S 0.05

(f) 2ZZ–GE:
Select the new guide bushing (STD or O/S 0.05).
If the bushing bore diameter of the cylinder head is greater than 10.506 mm (0.4136 in.), machine the bushing bore to the following dimension:
10.538 – 10.556 mm (0.4149 – 0.4156 in.)
If the bushing bore diameter of the cylinder head is greater than 10.556 mm (0.4156 in.), replace the cylinder head.

(g) 2ZZ–GE:
Gradually heat the cylinder head to 110 – 130°C (230 – 266°F).

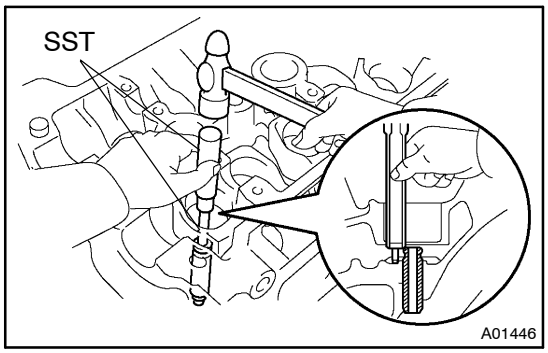

(h) Using SST and a hammer, tap in a new guide bushing to the specified protrusion height.
SST 09201–01055, 09950–70010 (09951–07100)
Protrusion height:
1ZZ–FE 8.7 – 9.1 mm (0.342 – 0.358 in.)
2ZZ–GE 15.3 – 15.7 mm (0.602 – 0.618 in.)

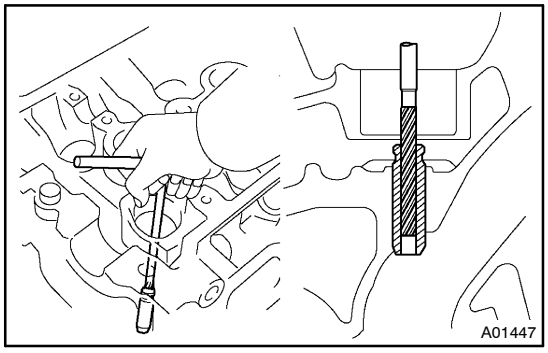

(i) Using a sharp 5.5 mm reamer, ream the guide bushing to obtain the standard specified clearance (See page EM–49) between the guide bushing and valve stem.