BR15S–01

INSTALLATION

1. INSTALL BRAKE BOOSTER

(a) Install a new gasket and brake booster with 4 nuts.
Torque: 13 N·m (130 kgf·cm, 9 ft·lbf)

(b) Install the clevis, and torque the lock nut.
Torque: 25 N·m (260 kgf·cm, 19 ft·lbf)

(c) Install the clevis pin into the clevis and brake pedal, and install the clip to the clevis pin.

(d) Install the pedal return spring.

2. CONNECT PRESSURE FEED TUBE TO PS VANE PUMP (See page SR–33)

3. INSTALL FRONT BRAKE LINE

(a) Insert the brake line with the grommet into the body, and install the grommet to the body.

(b) w/ ABS:
Using SST and spanner, connect the brake line to the flexible hose of front brake.
SST 09751–36011
Torque: 15 N·m (155 kgf·cm, 11 ft·lbf)

(c) w/o ABS:
Using SST, connect the brake line to the proportioning valve.
SST 09751–36011
Torque: 15 N·m (155 kgf·cm, 11 ft·lbf)

4. w/ ABS:
INSTALL ABS ACTUATOR ASSEMBLY (See page BR–56)

5. INSTALL OUTER FRONT COWL TOP PANEL

Install the outer front cowl top panel with the 5 bolts.
Torque: 7.8 N·m (80 kgf·cm, 69 in.·lbf)

6. INSTALL WIPER MOTOR AND LINK ASSEMBLY, COWL TOP VENTILATOR LOUVER AND 2 WIPER ARMS (See page BO–32)

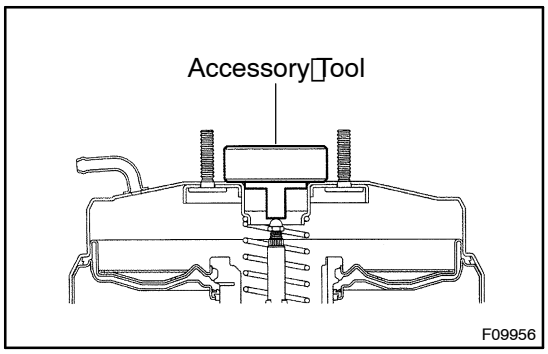

7. When replacing the brake master cylinder only: ADJUST LENGTH OF BRAKE BOOSTER PUSH ROD

(a) Apply chalk to the tip of an accessory tool.

(b) Place the accessory tool to the brake booster.

(c) Measure the clearance between the brake booster push rod and accessory tool.
Clearance: 0 mm (0 in.)

HINT:
Adjust the clearance in following cases:

- If there is a clearance between the accessory tool and the shell of the booster (floating accessory tool), the clearance is small.
- If the chalk does not stick on the tip of the push rod, the clearance is large.

(d) If the clearance is outside of the specified range, depress the brake pedal and adjust the length of the protruding push rod of the brake booster.

NOTICE:
Make an adjustment with the booster having no vacuum. (Depress the brake pedal several times with the engine stopped.)

8. CONNECT VACUUM HOSE TO BRAKE BOOSTER

9. M/T:
INSTALL CLUTCH MASTER CYLINDER (See page CL–8)

10. INSTALL MASTER CYLINDER (See page BR–13)

11. FILL BRAKE RESERVOIR WITH BRAKE FLUID AND BLEED BRAKE SYSTEM (See page BR–4)

12. CHECK FOR FLUID LEAKAGE

13. BLEED POWER STEERING SYSTEM (See page SR–4)

14. CHECK AND ADJUST BRAKE PEDAL

(a) Check and adjust the brake pedal (See page BR–6).

(b) Install the finish panel and lower No. 1 panel.

15. DO OPERATIONAL CHECK (See page BR–14 or BR–18)

16. INSTALL FRONT WHEEL
Torque: 103 N·m (1,050 kgf·cm, 76 ft·lbf)