BR166–01

INSPECTION

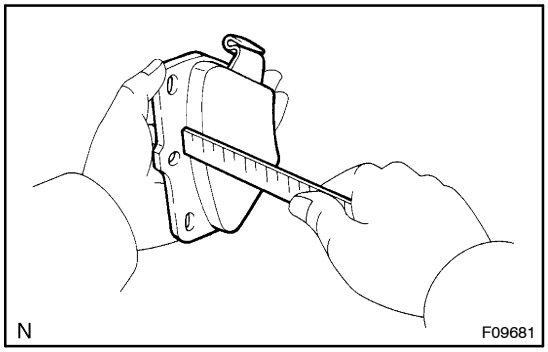

1. MEASURE PAD LINING THICKNESS

Using a ruler, measure the pad lining thickness.

Standard thickness: 10.0 mm (0.394 in.)

Minimum thickness: 1.0 mm (0.039 in.)

Replace the pad if the pad's thickness is at the minimum thickness or less, or if the pad has severe, uneven wear.

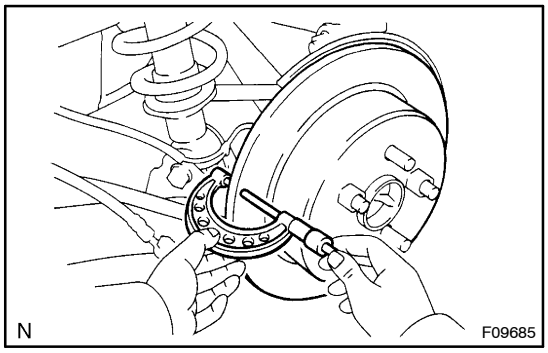

2. MEASURE DISC THICKNESS

Using a micrometer, measure the disc thickness.

Standard thickness: 9.0 mm (0.354 in.)

Minimum thickness: 7.5 mm (0.295 in.)

Replace the disc if the disc's thickness is at the minimum thickness or less. Replace the disc or grind it on a lathe if it is scored or worn unevenly.

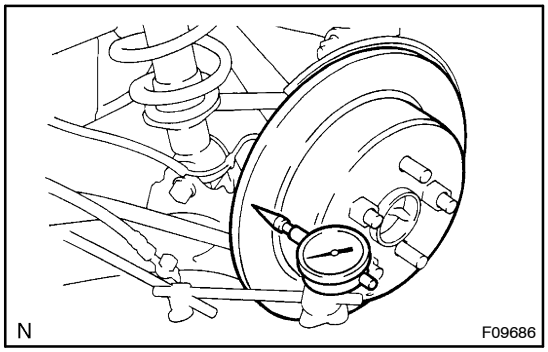

3. MEASURE DISC RUNOUT

Using a dial indicator, measure disc runout at a position 10 mm (0.39 in.) from the outside edge.

Maximum disc runout: 0.15 mm (0.0059 in.)

If the disc's runout is at the maximum value or greater, check the bearing play in the axial direction and check the axle hub runout (See page SA–51). If the bearing play and axle hub runout are not abnormal, adjust the disc runout or grind it on a "On–car" brake lathe.

4. IF NECESSARY, ADJUST DISC RUNOUT

(a) Remove the hub nuts and the disc. Reinstall the disc in the position turned 1/5 from its original position on the hub. Install and torque the hub nuts.

Torque: 103 N·m (1,050 kgf·cm, 76 ft·lbf)

Remeasure the disc runout. Make a note of the runout and the disc's position on the hub.

(b) Repeat (a) until the disc has been installed on the 3 remaining hub positions.

(c) If the minimum runout recorded in (a) and (b) is less than 0.15 mm (0.0059 in.), install the disc in that position.

(d) If the minimum runout recorded in (a) and (b) is greater than 0.15 mm (0.0059 in.), replace the disc and repeat step 3.