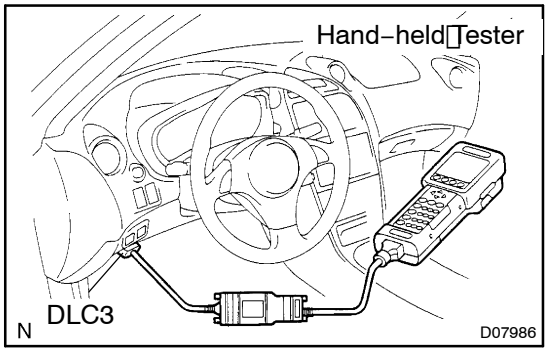

ABS ACTUATOR

BR16E–01

ON–VEHICLE INSPECTION

1. IN CASE OF USING HAND–HELD TESTER:

(a) Connect the hand–held tester to the DLC3.

(b) Start the engine and run it at idle.

(c) Select the ACTIVE TEST mode on the hand–held tester.

HINT:

Please refer to the hand–held tester operator's manual for further details.

2. INSPECT ACTUATOR MOTOR OPERATION

(a) With the motor relay ON, check the actuator motor operation noise.

(b) Turn the motor relay OFF.

(c) Depress the brake pedal and hold it for about 15 seconds. Check that the brake pedal cannot be depressed.

(d) With the motor relay ON, check that the pedal does not pulsate.

NOTICE:

Do not keep motor relay ON for more than 5 seconds continuously. When operating it continuously, set the interval of more than 20 seconds.

(e) Turn the motor relay OFF and release the brake pedal.

3. INSPECT RIGHT FRONT WHEEL OPERATION

NOTICE:

Never turn ON the solenoid which is not described below.

(a) With the brake pedal depressed, perform the following operations.

(b) Turn the SFRH and SFRR solenoid ON simultaneously, and check that the pedal cannot be depressed.

NOTICE:

Do not keep solenoid ON for more than 10 seconds continuously. When operating it continuously, set the interval of more than 20 seconds.

(c) Turn the SFRH and SFRR solenoid OFF simultaneously, and check that the pedal can be depressed.

(d) Turn the motor relay ON, and check that the pedal returns.

NOTICE:

Do not keep motor relay ON for more than 5 seconds continuously. When operating it continuously, set the interval of more than 20 seconds.

(e) Turn the motor relay OFF and release the brake pedal.

4. INSPECT OTHER WHEEL OPERATION

As in the same procedure, check the solenoids of other wheels.

HINT:

Left front wheel: SFLH, SFLR

Right rear wheel: SRRH, SRRR

Left rear wheel: SRLH, SRLR

5. CLEAR DTC (See page DI–68)

6. IN CASE OF NOT USING HAND–HELD TESTER:

HINT:

Using the ABS actuator checker (SST), check the operation of the actuator. If the actuator does not operate, check the operation of sub–wire harness G according to the instructions on pages DI–92 and DI–87. If the solenoid and/or pump motor relay are abnormal, replace the relay and inspect the actuator operation again.

7. INSPECT BATTERY VOLTAGE

Battery voltage: 10 – 14 V

8. DISCONNECT CONNECTORS

Disconnect the 2 connectors from the actuator.

9. CONNECT ACTUATOR CHECKER (SST)

(a) Connect the actuator checker (SST) to the actuator side wire harness via the sub–wire harness (SST), as shown.

SST 09990–00150, 09990–00250, 09990–00300, 09990–00360

(b) Connect the red cable of the checker to the battery positive (+) terminal and black cable to the negative (–) terminal. Connect the black cable of the sub–wire harness to the battery negative (–) terminal or body ground.

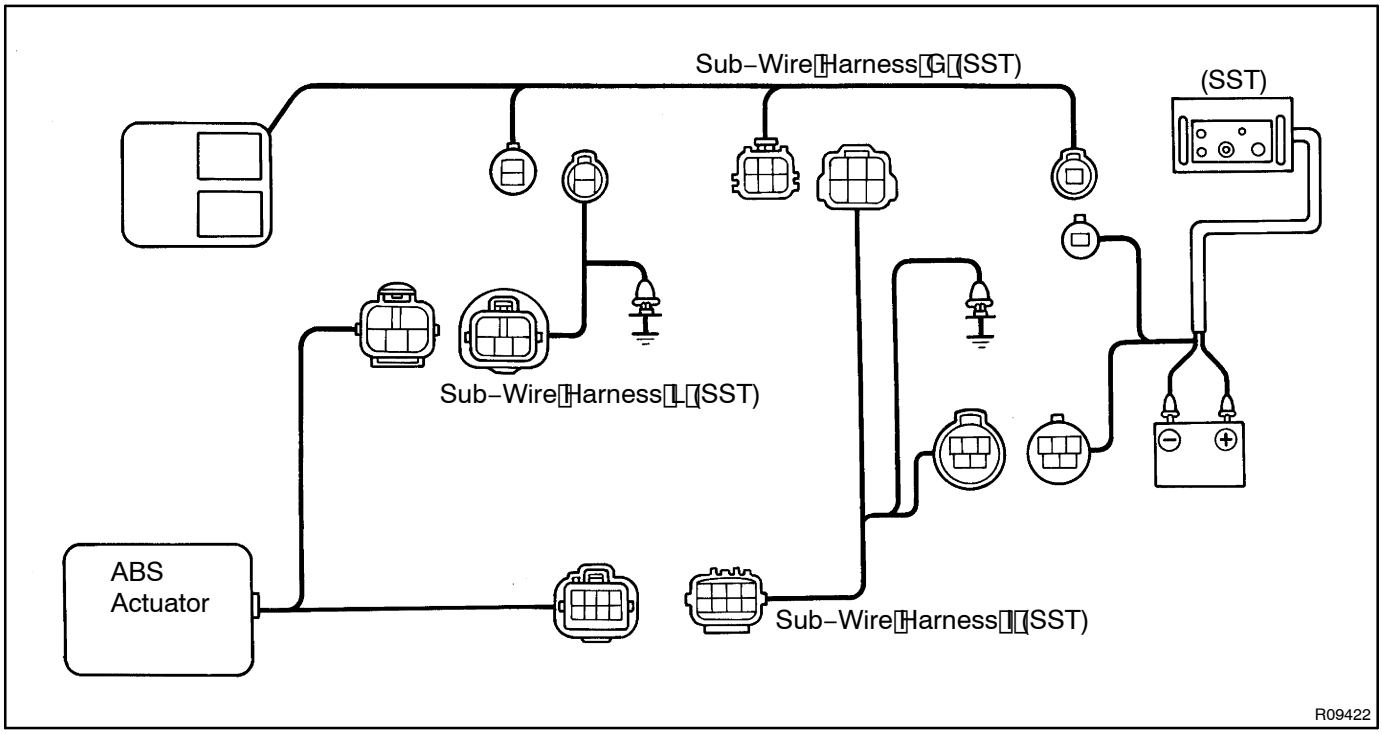

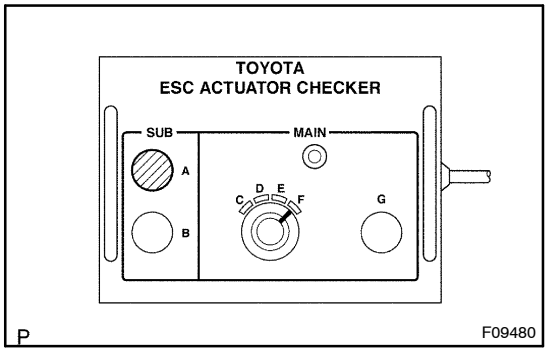

10. INSPECT ABS ACTUATOR OPERATION OF REAR LH WHEEL

HINT:

The functions of the ABS actuator checker switches are shown in the table below.

A	Motor ON/OFF
B	Front LH solenoid ON/OFF
C	–
D	Rear RH solenoid
E	Front RH solenoid
F	Rear LH solenoid
G	Solenoid ON/OFF

(a) Start the engine and run it at idle.

(b) Turn select switch of the actuator checker to the ”F” position.

(c) Push and hold in the ”A” switch for a few seconds. Make sure that you can hear the motor running.

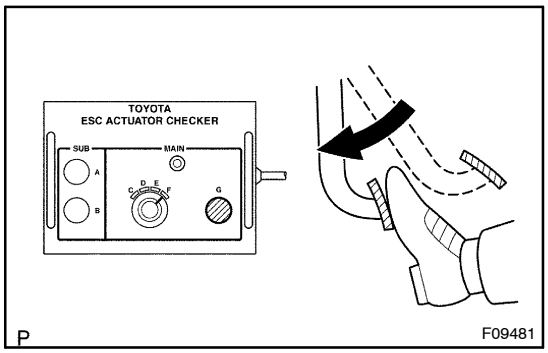

(d) Depress the brake pedal and hold it until step (g) is completed.

(e) Push and hold in the ”G” switch for a few seconds, and check that the brake pedal does not go down.

NOTICE:

Do not keep the ”G” switch pushed down for more than 10 seconds.

(f) Release the ”G” switch and check that the pedal goes down.

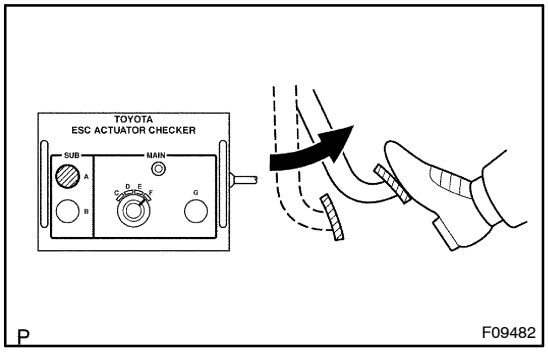

(g) Push the ”A” switch and check that the pedal returns.

(h) Release the brake pedal.

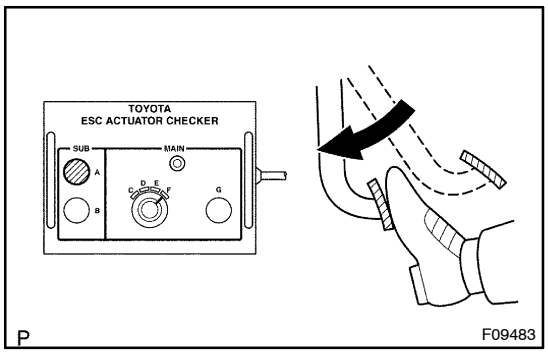

(i) Push and hold in the ”A” switch for a few seconds.

(j) Depress the brake pedal and hold it for about 15 seconds. As you hold the pedal down, push the ”A” switch for a few seconds and check that the brake pedal does not pulsate.

(k) Release the brake pedal.

11. INSPECT FOR OTHER WHEELS

(a) Turn the selector switch to ”E” position (for front RH wheel).

(b) Repeating (c) to (j) to the step 4, check the actuator operation similarly.

(c) Similarly, inspect "front LH" and "rear RH" wheel.

HINT:

When inspecting the "front LH" wheel, push the "B" switch instead of the POWER SWITCH. This makes it possible to inspect wherever the selector switch position indicates.

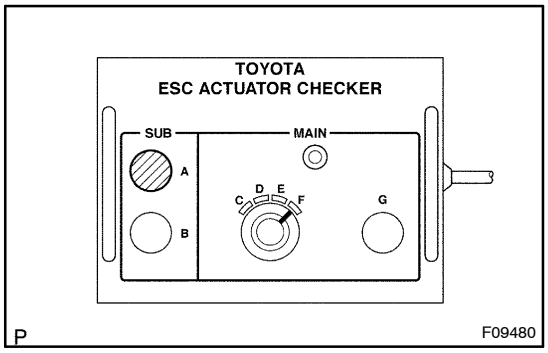

12. PUSH MOTOR SWITCH

(a) Push and hold in the "A" switch for a few seconds.

(b) Stop the engine.

13. DISCONNECT ACTUATOR CHECKER (SST) FROM ACTUATOR

(a) Disconnect the actuator checker (SST) and 3 sub-wire harness (SST) from the actuator.

SST 09990-01150, 09990-00250, 09990-00300, 09990-00360

(b) Connect the actuator connectors.

(c) Clear the DTC (See page DI-68).