DI6RI–01

CIRCUIT INSPECTION

DTC	P0500/42	Vehicle Speed Sensor Malfunction

CIRCUIT DESCRIPTION

The vehicle speed sensor outputs a 4–pulse signal for every revolution of the transaxle output shaft. After this signal is converted into a more precise rectangular wave form by the wave form shaping circuit inside the combination meter, it is then transmitted to the Engine and ECT ECU.

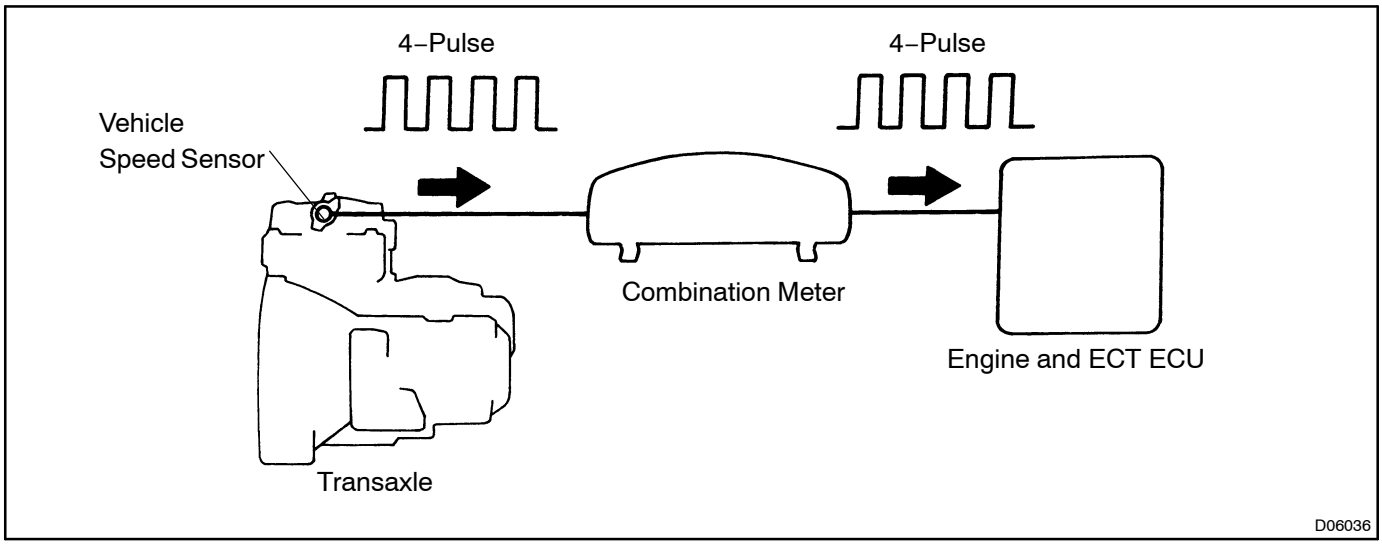

DTC No.	DTC Detecting Condition	Trouble Area
P0500/42	When all of the following conditions continues for 1 sec. or more: 1. After the ignition switch is turned on, 0.5 second or more elapses. 2. Counter gear rpm is equal to or greater then vehicle speed. 3. Vehicle speed sensor signal can not be input to the Engine and ECT ECU. 4. The condition that engine coolant temp. is 20 °C or more (no error in engine coolant temp. sensor circuit is detected) and the neutral start switch is set to P or N continues for 2 for. or more, or the condition that engine coolant temp. is less than 20 °C (an error in engine coolant temp. sensor circuit is detected) and the neutral start switch is set to P or N continues for 30 sec. or more.	• Combination meter • Open or short in vehicle speed sensor circuit • Vehicle speed sensor • Engine and ECT ECU • Automatic transaxle (clutch, brake or gear etc,)
	Clutch or brake slips or gear is broken	

WIRING DIAGRAM

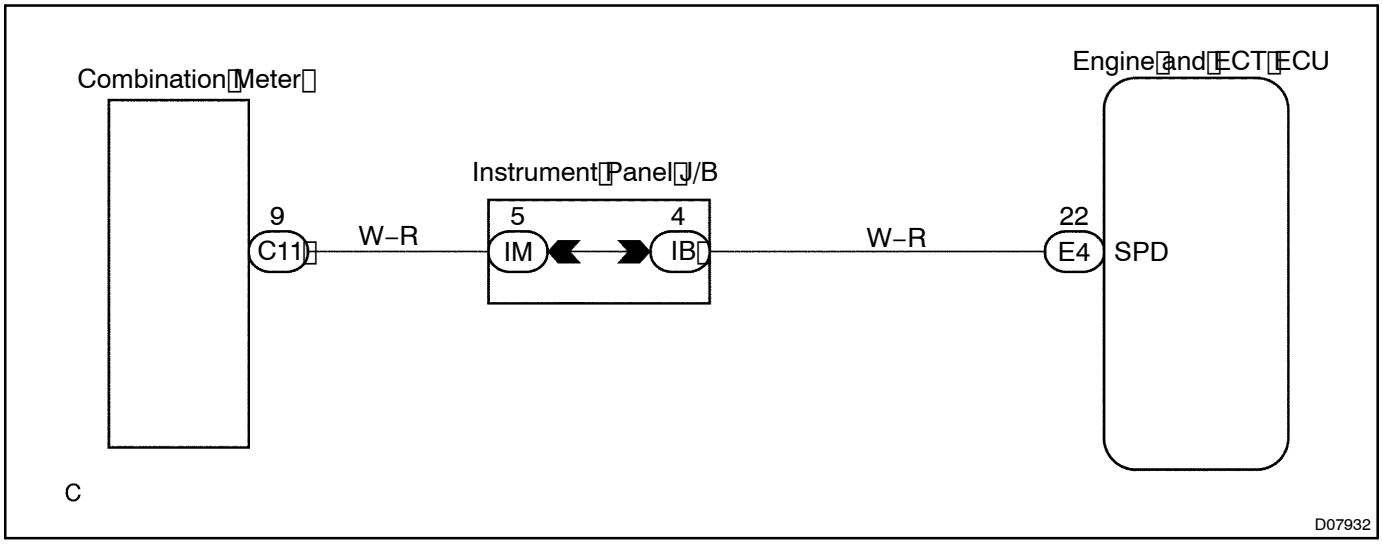

INSPECTION PROCEDURE

1	**Check operation of speedometer.**

HINT:
Read freeze frame data using hand–held tester. Because freeze frame records the engine conditions when the malfunction is detected. When troubleshooting it is useful for determining whether the vehicle was running or stopped, the engine was warmed up or not, the air–fuel ratio was lean or rich, etc. at the time of the malfunction.

CHECK:

Drive the vehicle and check if the operation of the speedometer in the combination meter is normal.

HINT:
The vehicle speed sensor is operating normally if the speedometer display is normal.

NG → **Check speedometer (See page BE–2).**

OK

2	**Check for short in harness and connector between terminal SPD of Engine and ECT ECU connector and body ground.**

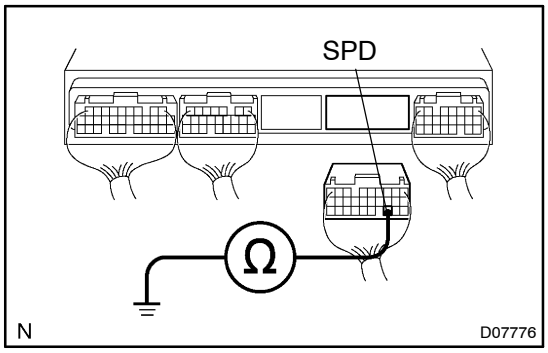

PREPARATION:
Disconnect the connector of the Engine and ECT ECU.
CHECK:
Check continuity between terminal SPD of the Engine and ECT ECU connector and body ground.
OK:
No continuity (1MΩ or higher)

NG → **Repair or replace harness or connector.**

OK

3	**Check voltage between terminal SPD of Engine and ECT ECU connector and body ground.**

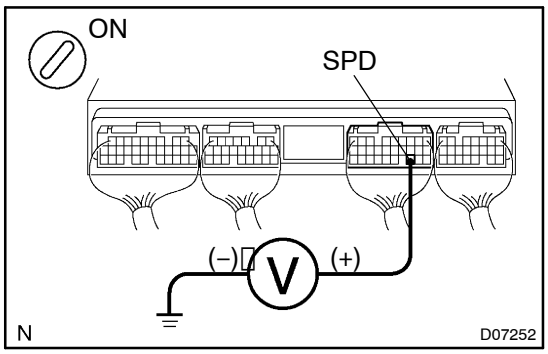

PREPARATION:
Turn ignition switch ON.
CHECK:
Measure voltage between terminal SPD of Engine and ECT ECU connector and body ground.
OK:
Voltage: 9 – 14 V

NG → **Check for open in harness and connector between instrument panel J/B and Engine and ECT ECU (See page IN–30).**

OK

4	**Check for open in harness and connector between instrument panel J/B and combination meter (See page IN–30).**

NG → **Repair or replace harness or connector.**

OK

5	**Check Engine and ECT ECU (See page IN–20).**

NG → **Replace Engine and ECT ECU.**

OK

Check and repair transaxle (clutch, brake or gear etc.).