DI6SY–01

O/D Main Switch & O/D OFF Indicator Light Circuit

CIRCUIT DESCRIPTION

The O/D main switch contacts go open when the switch is pushed in and go closed when it is pushed out. If O/D main switch is at OFF position, the O/D OFF indicator light lights up, and the Engine and ECT ECU prohibits shifting overdrive.

WIRING DIAGRAM

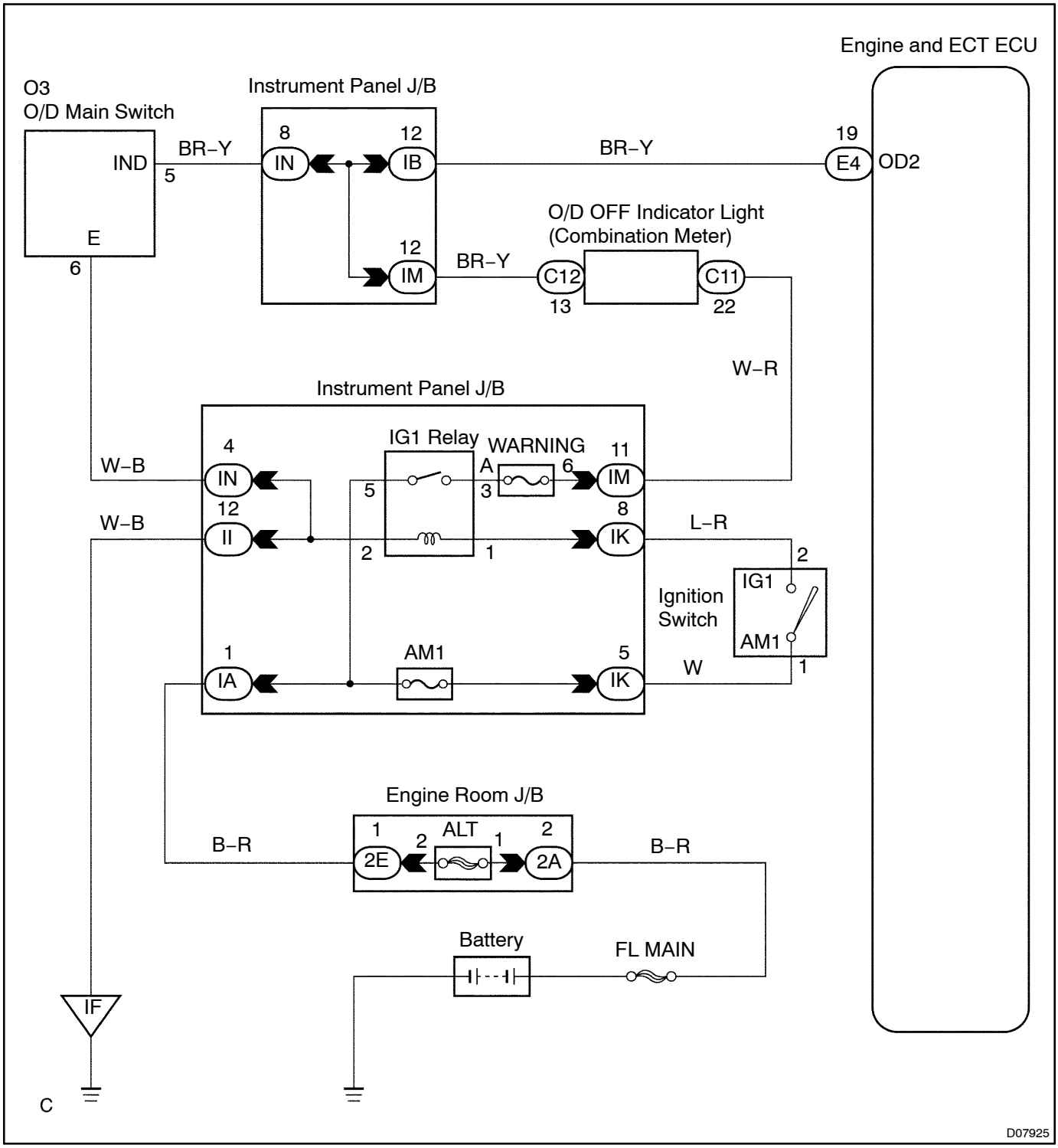

INSPECTION PROCEDURE

O/D OFF indicator light does not light up

1	**Check O/D main switch.**

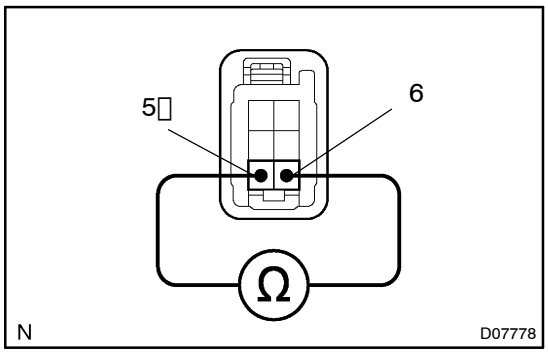

PREPARATION:
Disconnect the O/D main switch connector.
CHECK:
Check continuity between terminals 5 and 6 of O/D main switch connector.
OK:

O/D main switch	Resistance
ON	∞ Ω (open)
OFF	0 Ω (continuity)

NG → **Replace the O/D main switch.**

OK

2	**Check and replace combination meter (See page BE–2).**

NG → **Replace the combination meter.**

OK

3	Check OVRDRIVE CUT SW2 signal.

When using hand-held tester:

PREPARATION:

(a) Connect a hand-held tester to the DLC3.

(b) Turn the ignition switch ON and hand-held tester main switch ON.

CHECK:

Read the OVRDRIVE CUT SW2 signal on the hand-held tester.

OK:

O/D main switch condition	OVRDRIVE CUT SW2 signal
Pushed in	OFF
Pushed out	ON

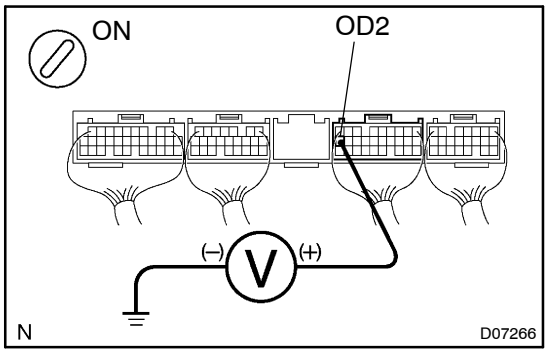

When not using hand-held tester:

PREPARATION:

Turn the ignition switch ON.

CHECK:

Check voltage between terminal OD2 of Engine and ECT ECU and body ground.

OK:

O/D main switch	Voltage
OFF	Below 1.0 V
ON	10 – 14 V

OK → **Check and replace the Engine and ECT ECU (See page IN–30).**

NG

4	**Check harness and connector between O/D OFF indicator light and Engine and ECT ECU (See page IN–20).**

PREPARATION:

Disconnect the connector of Engine and ECT ECU and the connector of the combination meter.

CHECK:

Measure the continuity between the connector of Engine and ECT ECU and the connector of the combination meter.

OK:

Continuity

NG → **Repair or replace the harness or connector.**

OK

Repair or replace the wire harness or connectors between the connector of Engine and ECT ECU and body Ground.

O/D OFF indicator light remains ON

1	**Check O/D main switch.**

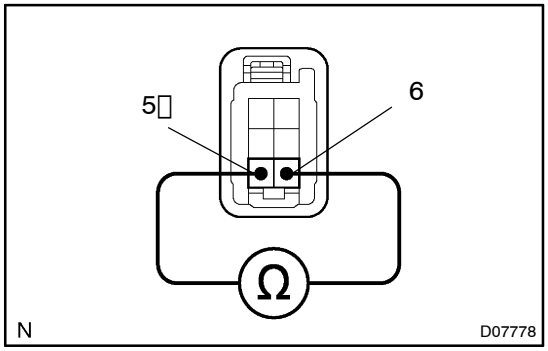

PREPARATION:
Disconnect the O/D main switch connector.
CHECK:
Check continuity between terminals 1 and 3 of O/D main switch connector.
OK:

O/D main switch	Resistance
ON	∞ Ω (open)
OFF	0 Ω (continuity)

NG → **Replace the O/D main switch.**

OK

2	**Check harness and connector between O/D OFF indicator light and O/D main switch, O/D OFF indicator light and Engine and ECT ECU (See page IN–30).**

NG → **Repair or replace the harness or connector.**

OK

Check and replace the Engine and ECT ECU (See page IN–20).